Exelon Generation
4300 Winfield Road
Warrenville, IL 60555

www.exeloncorp.com

Exelon Nuclear

10 CFR 50.90

RS-10-015
February 22, 2010

U. S. Nuclear Regulatory Commission
ATTN: Document Control Desk
Washington, D.C. 20555-0001

LaSalle County Station, Units 1 and 2
Facility Operating License Nos. NPF-11 and NPF-18
NRC Docket Nos. 50-373 and 50-374

Subject: Request for Amendment to Technical Specification 3.1.7, "Standby Liquid Control (SLC) System"

References:

1) Letter from M. A. Satorius (U. S. NRC) to C. M. Crane (Exelon Generation Company, LLC), "Notice of Enforcement Discretion for Exelon Generation Company LLC Regarding Quad Cities Nuclear Power Station, Unit 1 (NOED 06-3-01)," dated October 18, 2006

2) Letter from M. A. Satorius (U. S. NRC) to C. M. Crane (Exelon Generation Company, LLC), "Notice of Enforcement Discretion for Exelon Generation Company LLC Regarding Dresden Nuclear Power Station, Unit 2 (NOED 07-3-01; TAC MD4044)," dated January 24, 2007

In accordance with 10 CFR 50.90, "Application for amendment of license, construction permit, or early site permit," Exelon Generation Company, LLC (EGC) requests an amendment to Appendix A, Technical Specifications (TS) of Facility Operating License Nos. NPF-11 and NPF-18 for LaSalle County Station (LSCS), Units 1 and 2, respectively.

The proposed amendment revises Technical Specification (TS) 3.1.7, "Standby Liquid Control (SLC) System," to extend the completion time (CT) associated with Condition B (i.e., "Two SLC subsystems inoperable.") from eight hours to 72 hours.

In References 1 and 2, the NRC exercised discretion to not enforce compliance with the actions required in TS 3.1.7, Condition C for Quad Cities Nuclear Power Station (QCNPS), Unit 1 and Dresden Nuclear Power Station (DNPS), Unit 2, respectively. These notices of enforcement discretion (NOEDs) provided a 72-hour extension to the 12-hour CT specified in Required Action C.1 (i.e., "Be in MODE 3"). This extension enabled each site to avoid a TS-required shutdown while implementing short-term repair and restoration activities for an emergent issue impacting SLC system operability. The purpose of this proposed license amendment request (LAR) is to adopt a permanent, risk-informed CT extension for LSCS TS 3.1.7, Required Action B.1, thus minimizing the potential for thermal transients associated with placing LSCS Units 1 and 2 in Mode 3.

EGC has utilized the guidance in Regulatory Guide 1.174, "An Approach for Using Probabilistic Risk Assessment In Risk-Informed Decisions on Plant-Specific Changes to the Licensing Basis," to develop the technical basis for this LAR. The EGC analysis demonstrates, with reasonable assurance, that the proposed LAR satisfies the risk acceptance guidelines in Regulatory Guide 1.174 and Regulatory Guide 1.177, "An Approach for Plant-Specific, Risk-Informed Decision-making: Technical Specifications." The proposed LAR meets the intent of very small risk increases, consistent with the NRC's Safety Goal Policy Statement.

EGC Probabilistic Risk Assessment (PRA) maintenance, update processes, and technical capability evaluations provide a robust basis for concluding that the PRA is suitable for use in risk-informed licensing actions. Additionally, a PRA technical adequacy evaluation was performed consistent with the requirements of Regulatory Guide 1.200, "An Approach for Determining the Technical Adequacy of Probabilistic Risk Assessment Results for Risk-Informed Activities," Revision 1.

This request is subdivided as follows:

- Attachment 1 provides a description and evaluation of the proposed changes.
- Attachment 2 provides a mark-up of the LSCS TS page with the proposed change indicated.
- Attachment 3 provides the marked-up LSCS TS bases pages, with the proposed changes indicated. This attachment is provided for information only.
- Attachment 4 provides the risk assessment that supports the proposed TS change for LSCS (i.e., RM Documentation LS-LAR-01, Revision 0).

The proposed amendment has been reviewed and approved by the LSCS Plant Operations Review Committee and the Nuclear Safety Review Board in accordance with the requirements of the EGC Quality Assurance Program and procedures. EGC requests approval of the proposed amendment by February 22, 2011, with implementation within 60 days of issuance.

In accordance with 10 CFR 50.91, "Notice for public comment," EGC is notifying the State of Illinois of this application for amendment by transmitting a copy of this letter and its attachments to the designated State Official.

There are no regulatory commitments contained within this letter. If you have any questions or require additional information, please contact Mr. John L. Schrage at (630) 657-2821.

I declare under penalty of perjury that the foregoing is true and correct. Executed on the 22nd day of February 2010.

Respectfully,

Patrick R. Simpson
Manager - Licensing

Attachment 1:	Evaluation of Proposed Amendment
Attachment 2:	Proposed Markup of LSCS Technical Specification 3.1.7
Attachment 3:	Proposed Markup of LSCS Technical Specification Bases B3.1.7
Attachment 4:	RM Documentation No. LS-LAR-01, Revision 0

ATTACHMENT 1
Evaluation of Proposed Amendment

1.0 DESCRIPTION
2.0 PROPOSED CHANGE
3.0 BACKGROUND
4.0 TECHNICAL ANALYSIS
5.0 REGULATORY ANALYSIS
5.1 No Significant Hazards Consideration
5.2 Applicable Regulatory Requirements/Criteria
6.0 ENVIRONMENTAL CONSIDERATION
7.0 REFERENCES

1.0 DESCRIPTION

In accordance with 10 CFR 50.90, "Application for amendment of license, construction permit, or early site permit," Exelon Generation Company, LLC (EGC) requests an amendment to Facility Operating License Nos. NPF-11 and NPF-18 for LaSalle County Station (LSCS) Units 1 and 2, respectively. The proposed amendment revises Technical Specification (TS) 3.1.7, "Standby Liquid Control (SLC) system," by extending the Completion Time (CT) associated with Condition B (i.e., Two SLC subsystems inoperable) from 8 hours to 72 hours.

LSCS TS LCO 3.1.7 requires the operability of two SLC subsystems when the reactor is in Modes 1 and 2. In Modes 1 and 2, the SLC system satisfies the requirements of 10 CFR 50.62, "Requirements for reduction of risk from anticipated transients without scram (ATWS) events for light-water-cooled nuclear power plants," and "10 CFR 50, Appendix A, "General Design Criteria for Nuclear Power Plants," Criterion (GDC) 26, "Reactivity control system redundancy and capability."

By letter dated August 26, 2008 (Reference 1), EGC requested an amendment to the LSCS TS regarding the adoption of an alternate source term (AST) methodology. The NRC is currently reviewing the proposed license amendment. Upon approval and implementation of the proposed AST license amendment, LSCS TS LCO 3.1.7 will also require the operability of the SLC system in Mode 3 to ensure compliance with the requirements of 10 CFR 50.67, "Accident source term."

TS 3.1.7, Condition B and the associated Required Action B.1 address the inoperability of both SLC subsystems. Specifically, Required Action B.1 requires restoration of one SLC subsystem to operable status, with a CT of eight hours. If Required Action B.1 cannot be satisfied within the CT, Condition C and associated Required Action C.1 require the reactor to be in Mode 3 within 12 hours.

The current CT for Required Action B.1 is based on the low probability of a design basis accident or transient occurring, concurrent with the failure of the control rods to shut down the reactor. Consistent with this current basis, the proposed TS CT change is based upon a risk-informed assessment that evaluates the probability and consequences of transients, accidents, and severe accidents, including the design basis accident and transients occurring concurrent with control rod insertion failure.

EGC has utilized the guidance in Regulatory Guide 1.174, "An Approach for Using Probabilistic Risk Assessment In Risk-Informed Decisions on Plant-Specific Changes to the Licensing Basis," to develop the risk assessment for this proposed change. The EGC assessment demonstrates, with reasonable assurance, that the proposed license amendment satisfies the risk acceptance guidelines in Regulatory Guide 1.174 and Regulatory Guide 1.177, "An Approach for Plant-Specific, Risk-Informed Decision-making: Technical Specifications." The proposed license amendment meets the intent of very small risk increases, consistent with the NRC's Safety Goal Policy Statement.

In addition to evaluating the risk impact, EGC has evaluated the proposed change to determine whether the impact of the change is consistent with the intent of the defense-in-depth philosophy and the principle that sufficient safety margins are maintained (i.e., consistent with the requirements of RG 1.177, Section C, "Regulatory Position," paragraph 2.2, "Traditional Engineering Considerations").

EGC has also determined that the EGC Probabilistic Risk Assessment (PRA) maintenance, update processes, and technical capability evaluations provide a robust basis for concluding that the EGC PRA is suitable for use in risk-informed licensing actions. EGC conducted a PRA technical adequacy evaluation, consistent with the requirements of Regulatory Guide 1.200, "An Approach for Determining the Technical Adequacy of Probabilistic Risk Assessment Results for Risk-Informed Activities," Revision 1.

2.0 PROPOSED CHANGE

The proposed amendment revises the CT for LSCS TS 3.1.7, Required Action B.1 from eight hours to 72 hours.

3.0 BACKGROUND

The SLC system is designed to provide the capability of bringing the reactor, at any time in a fuel cycle, from full power and minimum control rod inventory to a subcritical condition with the reactor in the most reactive, xenon free state without taking credit for control rod movement. The SLC system satisfies the requirements of 10 CFR 50.62, "Requirements for reduction of risk from anticipated transients without scram (ATWS) events for light-water-cooled nuclear power plants."

LSCS TS LCO 3.1.7 requires the operability of two SLC subsystems when the reactor is in Modes 1 and 2. TS 3.1.7, Condition B and the associated Required Action B.1 address the inoperability of both SLC subsystems. Specifically, Required Action B.1 requires restoration of one SLC subsystem to operable status, with a CT of eight hours. If Required Action B.1 cannot be satisfied within the CT, Condition C and associated Required Action C.1 requires the reactor to be in Mode 3 within 12 hours.

In October 2006 and January 2007, EGC requested Notices of Enforcement Discretion (NOEDs) for Quad Cities Nuclear Power Station (QCNPS) Unit 1 and Dresden Nuclear Power Station (DNPS) Unit 2, respectively, to allow sufficient time for the repair of minor SLC system tank leaks. The NRC granted these NOEDs, allowing an additional 72 hours to the original 12-hour CT for TS 3.1.7, Required Action C.1 (i.e., "Be in MODE 3") for the emergent dual-train inoperability of the SLC systems (References 2 and 3).

The purpose of this proposed LAR is to adopt a permanent, risk-informed CT extension for LSCS TS 3.1.7, Required Action B.1, thus minimizing the potential for thermal transients associated with placing LSCS Units 1 and 2 in Mode 3. The integrity of the reactor vessel and other components of the primary system of a nuclear plant can be adversely affected by the number of thermal transients that they are subjected to during their lifetime. As each additional thermal transient can affect this integrity, it is prudent to avoid such transients.

4.0 TECHNICAL ANALYSIS

The proposed change is consistent with the principle that adequate defense-in-depth is maintained, that sufficient safety margins are maintained, and that increases in risk are very small and meet the acceptance guidelines in RG 1.74, RG 1.77, and the NRC's Safety Goal Policy Statement. This consistency is described below, as well as in Attachment 4.

4.1 System Description

The SLC system consists of a boron solution storage tank, two positive displacement pumps, two explosive valves that are provided in parallel for redundancy, and associated piping and valves used to transfer borated water from the storage tank to the reactor pressure vessel (RPV). The borated solution is discharged near the bottom of the core shroud, where it then mixes with the cooling water rising through the core. A smaller tank containing demineralized water is provided for testing purposes.

The performance objective of the SLC system is to provide an alternative to the highly reliable control rod drive (CRD) scram system for reactivity control. The SLC system is designed to bring the reactor from rated power to a cold shutdown condition at any time in core life. The negative reactivity reduces reactor power from rated to zero level and allows cooling the nuclear system to room temperature, with the control rods remaining withdrawn in the rated power pattern. It includes the reactivity gains that result from complete decay of the rated power xenon inventory. It also includes the positive reactivity effects from eliminating steam voids, changing water density from hot to cold, reduced Doppler effect in uranium, reducing neutron leakage from boiling to cold, and decreasing control rod worth as the moderator cools.

In order to provide adequate shutdown margin, the minimum average concentration of 45% enriched boron in the reactor, after operation of the SLC System, is 660 ppm. This shutdown margin calculation is performed on a cycle specific basis. Sodium pentaborate is injected into the reactor based on the required boron concentration of 660 ppm in the reactor coolant including recirculation loops, at 68°F and normal reactor water level. The concentration injected is increased by 25% to allow for imperfect mixing and leakage. An additional 250 ppm is provided to accommodate dilution by the Residual Heat Removal system in the shutdown cooling mode.

In Reference 1, EGC requested an amendment to the LSCS TS regarding the adoption of an alternate source term (AST) methodology. The NRC is currently reviewing the proposed license amendment. As part of the proposed AST methodology, EGC will use the SLC system to inject sodium pentaborate into the RPV following a loss-of-coolant accident (LOCA) in order to maintain suppression pool pH above 7 (i.e., in order to ensure against re-evolution of elemental iodine). Upon approval and implementation of the proposed AST license amendment, the SLC system will also be required to be operable in Mode 3 to ensure that offsite doses remain within 10 CFR 50.67, "Accident source term," limits following a LOCA involving significant fission product releases.

The SLC system is manually initiated from the main control room, as directed by the emergency operating procedures, if and when the operator determines the reactor cannot be shut down, or kept shut down, with the control rods. The SLC system is used in the event that not enough control rods can be inserted to accomplish shutdown and cooldown in the normal manner.

4.2 Defense-in-Depth

The control rods are the primary reactivity control system for the reactors at LSCS. In conjunction with the Reactor Protection System (RPS), the control rods provide the means for reliable control of reactivity changes to ensure that, under conditions of

normal operation, including anticipated operational occurrences, specified acceptable fuel design limits are not exceeded. Operability of the control rods is governed by TS 3.1.3, "Control Rod OPERABILITY," and the control rods are demonstrated operable by the performance of TS Surveillance Requirements (SRs) 3.1.3.1 through 3.1.3.5. This Specification, along with TS 3.1.4, "Control Rod Scram Times," TS 3.1.5, "Control Rod Scram Accumulators," and TS 3.1.6, "Rod Pattern Control," ensure that the performance of the control rods in the event of a Design Basis Accident (DBA) or transient meets the assumptions used in the safety analyses.

Scram reliability is ensured by a number of design and operational features:

- Two sources of scram energy (accumulator and reactor pressure) provide a complementary motive force for each control rod drive whenever the reactor is operating.
- Each control rod drive mechanism has its own scram valves and scram pilot valves. Alternatively each drive mechanism may have a single pilot valve with dual solenoid operated pilot assemblies in place of two scram pilot valves. With either scram pilot valve configuration, only one drive can be affected if a scram valve fails to open. Two pilot solenoids are provided for each drive. Both pilot solenoids must be de-energized to initiate a scram of that drive mechanism.
- The reactor protection system and the control rod drive Hydraulic Control Units are designed so that the scram signal and mode of operation override all others.
- The control rod drive collet assembly and index tube are designed so they will not restrain or prevent control rod insertion during scram.
- The scram discharge volume is monitored for accumulated water and will scram the reactor before the volume is reduced to a point that could interfere with a scram.
- The alternate rod insertion (ARI) system provides an alternate means of exhausting the scram air header and closing the vent and drain valves of the scram discharge volume, thereby providing an additional reactor scram mechanism which is diverse, redundant and independent of the reactor protection system.

In addition to the ARI system, the ATWS Recirculating Pump Trip (RPT) system provides an additional means for rapid power reduction. The ATWS-RPT system initiates a recirculation pump trip, adding negative reactivity, following events in which a scram does not, but should occur, to lessen the effects of an ATWS event. Turbine stop valve closure or turbine control valve fast closure operational transients will initiate a reactor scram and a recirculation pump trip in time to maintain the reactor core within the thermal hydraulic safety limit.

As noted above, operability of the trip function of the control rods is demonstrated by specific SRs. For the control rod scram function to fail when a valid signal is sent, a diverse number of failures would have to occur in order in prevent the scram valves from opening.

The proposed change to the SLC CT does not affect the redundancy, independence, and diversity of the RPS and ARI systems, as well as the RPT. These systems and instrumentation remain operable to mitigate the consequences of any previously analyzed accident. In addition to the TS 3.1.3 requirements for control rod operability,

the EGC Work Management and Maintenance Rule (i.e., 10 CFR 50.65(a)(4)) programs provide controls and assessments to minimize the probability of simultaneous outages of redundant trains and ensure system reliability. The proposed SLC CT extension does not involve any change to plant equipment or system design functions.

This proposed TS CT extension does not change the design function of the SLC system and does not affect the system's ability to perform its design function. As such, the proposed change complies with the defense-in-depth principles described in RG 1.174, paragraph 2.2.1.1 and RG 1.177, paragraph 2.2.1. These principles, and the impact of the proposed change on each, are described below.

- **A reasonable balance is preserved between prevention of core damage, prevention of containment failure, and consequence mitigation.**

  The proposed SLC CT extension does not affect the ability of the SLC system, or any other system, to prevent core damage, prevent containment failure, or mitigate the consequences of an accident. The proposed change has only a very small impact on risk. The proposed change does not compensate for this risk impact with an assumption of improved containment integrity, nor does this proposed change degrade containment integrity and compensate with an assumption of improved core damage prevention.

- **Over-reliance on programmatic activities to compensate for weaknesses in plant design is avoided.**

  Plant design for both the primary (i.e., RPS and ARI/RPT) and alternate (i.e., SLC) reactivity control systems at LSCS is robust. The proposed SLC CT extension does not require, nor rely upon programmatic activities to compensate for weaknesses in plant design. The dual-channel RPS, in concert with the control rods, ensures reliable and automatic control of reactivity changes to ensure that fuel design limits are not exceeded. The scram system is designed so that the scram signal overrides all other operating signals. Upon loss of either instrument air or electrical power, the scram valves will fail open. Hence, failure of the valves' air system or electric system will produce, rather than prevent, a scram.

- **System redundancy, independence, and diversity are maintained commensurate with the expected frequency and consequences of challenges to the system.**

  The redundancy, independence, and diversity of the RPS, the control rods, and the control rod drive system are not affected during the extended 72-hour SLC CT. Entry into the dual-train SLC CT will be assessed and managed in accordance with the EGC Configuration Risk Management Program (CRMP).

  Additional redundancy for reactivity control is established by the LSCS Emergency Operating Procedures (EOPs). The EOPs describe the actions and criteria for manual addition of boron into the reactor coolant system, should RPS, the control rods, the control rod drive system, and the SLC be unable to perform the specifed design functions.

- **Defenses against potential common cause failures are maintained and the potential for introduction of new common cause failure mechanisms is assessed.**

  The extended SLC CT does not change the design function of the SLC system. Therefore, the proposed change does not affect existing common cause failure mechanisms. In addition, the operating environment and operating parameters for the SLC system, the RPS system, the control rods, and the control rod drive system remain constant; therefore, new common cause failures modes are not expected. Therefore, no new potential common cause failure mechanisms have been introduced by the proposed change.

- **Independence of barriers is not degraded.**

  The extended CT does not provide a mechanism that degrades the independence of fission product barriers, (i.e., fuel cladding, the reactor coolant system, or containment).

- **Defenses against human errors are maintained.**

  The risk assessment for the extended SLC CT does not credit, nor require new operator actions. Therefore, the proposed change does not impact defense-in-depth against human error.

4.3 Safety Margin Assessment

The proposed SLC CT extension does not involve a reduction in the margin of safety. The margin of safety is established through the design of the plant structures, systems, and components, the parameters within which the plant is operated, and the setpoints for the actuation of equipment relied upon to respond to an event. The proposed amendment does not modify the safety limits or setpoints at which protective actions are initiated. Safety margins applicable to the SLC system include pump capacity, boron concentration, boron enrichment, and system response timing. Since this proposed TS amendment does not change the SLC system design, but only extends a CT, safety margins are not challenged.

4.4 Risk Assessment

The CT is defined as part of the limiting condition for operation (LCO), and is intended to allow sufficient time to repair failed equipment while minimizing the risk associated with the loss of the component function. An extension of the CT increases the unavailability of a component due to the increased time the component is out-of-service for maintenance. The CT risk is reflected in the core damage frequency (CDF) and the large early release frequency (LERF) by adjusting the component unavailability due to maintenance.

The proposed CT extension for the dual-train inoperability of the LSCS SLC system provides additional time to complete test and maintenance activities while at power, potentially reducing the number of forced outages related to compliance with the existing CT.

EGC completed a risk assessment for LSCS using the full power internal events, Level 1 CDF model and the associated Level 2 LERF model. This risk assessment is provided in Attachment 4. The risk assessment was performed in accordance with the requirements in RG 1.174, RG 1.177, and RG 1.200, Revision 1. The results of these risk assessments are discussed below.

4.4.1 Regulatory Standards

The RG 1.174 acceptance guidelines for a permanent TS change specify that the delta (Δ)CDF and the ΔLERF associated with the change should be less than specified acceptable values, which are dependent on the baseline CDF and LERF. These specified acceptable values are presented for two ranges of risk impacts, those described as "small changes" and those described as "very small changes." EGC utilized the acceptance guidelines for "very small changes" in the risk assessment for the proposed LSCS TS change.

The RG 1.174 acceptance guidelines prescribe that the risk metrics of ΔCDF and ΔLERF be less than 1.0E-06/yr and 1.0E-07/yr, respectively, to establish a very small risk increase with no additional compensatory measures required. RG 1.174 also specifies guidelines for consideration of external events, and stipulates that external events can be evaluated in either a qualitative or quantitative manner.

RG 1.177 identifies a three-tiered approach for the evaluation of the risk associated with a proposed TS change.

- **Tier 1, PRA Capability and Insights**

  Tier 1 is an evaluation of the plant-specific risk associated with the proposed TS change, as shown by the change in CDF and incremental conditional core damage probability (ICCDP). Where applicable, containment performance should be evaluated on the basis of an analysis of LERF and incremental conditional large early release probability (ICLERP). The acceptance guidelines given in RG 1.177 for determining an acceptable TS change is that the ICCDP and the ICLERP associated with the change should be less than 5E-07 and 5E-08, respectively.

- **Tier 2, Avoidance of Risk Significant Plant Configuration**

  Tier 2 identifies and evaluates, with respect to defense-in-depth, any potential risk-significant plant equipment outage configurations associated with the proposed change. As such, procedures should provide reasonable assurance that risk-significant plant equipment outage configurations will not occur when equipment associated with the proposed TS change is out-of-service.

- **Tier 3, Risk-Informed Configuration Risk Management**

  Tier 3 provides for the establishment of an overall CRMP and confirmation that its insights are incorporated into the decision-making process before taking equipment out-of-service prior to or during the CT. Compared with Tier 2, Tier 3 provides additional coverage based on any additional risk significant configurations that may be encountered during maintenance scheduling over extended periods of plant operation. Tier 3 guidance can be satisfied by the Maintenance Rule (10 CFR 50.65(a)(4)), which requires a licensee to assess and manage the increase in risk that may result from activities such as surveillance, testing, and corrective and preventive maintenance.

RG 1.200, Revision 1 describes an acceptable approach for determining whether the quality of the PRA, in total or the parts that are used to support an application, is sufficient to provide confidence in the results, such that the PRA can be used in regulatory decision-making for light-water reactors. This guidance is intended to be consistent with the NRC's PRA Policy Statement and more detailed guidance in RG 1.174.

RG 1.200, Revision 1 endorses Addendum B of the American Society of Mechanical Engineers (ASME) Standard RA-S-2002, "Standard for Probabilistic Risk Assessment for Nuclear Power Plant Applications," Addenda RA-Sa-2003, and Addenda RA-Sb-2005, as applicable to full power internal event (FPIE) PRA models.

Since that time, the new ASME/American Nuclear Society (ANS) Standard RA-Sa-2009, "Addenda to RA-S-2008, Standard for Level 1/Large Early Release Frequency Probabilistic Risk Assessment for Nuclear Power Plant Applications," has been released. Although this standard is presently issued and endorsed by RG 1.200, Revision 2, neither of these documents adds further requirements that impact the results of the SLC CT risk assessment.

4.4.2 Tier 1: PRA Capability and Insights

As stated in RG 1.177, Tier 1 is an evaluation of the impact of the proposed TS change on CDF, ICCDP, and, when appropriate LERF and ICLERP considering PRA validity, and PRA insights and findings. Table 4.4.2-1 below provides the plant-specific risk associated with the proposed LSCS TS change using the FPIE PRA models and based on the risk metrics of ΔCDF, ICCDP, ΔLERF, and ICLERP.

Table 4.4.2-1 LSCS Risk Assessment Summary Results				
Hazard	**ΔCDF**	**ICCDP**	**ΔLERF**	**ICLERP**
FPIE	3.6E-08/yr	3.6E-08	1.2E-08/yr	1.2E-08
Acceptance Guideline	<1.0E-06/yr	<5.0E-07	<1.0E-07/yr	<5.0E-08
External Events	(1)	(1)	(1)	(1)

(1) In accordance with RG 1.174, paragraph 2.2.5.5, "Comparisons with Acceptance Guidelines," EGC performed a qualitative assessment of external event risk associated with the proposed LSCS SLC CT extension (i.e., as described below and in Appendix A of Attachment 4) to demonstrate that the changes in risk remain within the acceptance guidelines.

The base results of the risk assessment, as summarized in Table 4.4.2-1 above indicate that the ΔCDF, ICCDP, ΔLERF, and ICLERP risk metric values for the proposed change are below the acceptance guidelines as defined in RG 1.174 and RG 1.177. This analysis demonstrates that the proposed TS change satisfies the risk acceptance guidelines in RG 1.174 and RG 1.177, and therefore meets the intent of very small risk increases consistent with the NRC's Safety Goal Policy Statement.

As part of the risk assessments, EGC performed a sensitivity analysis to determine the maximum allowable CT prior to exceeding the "very small" acceptance criteria. For this sensitivity, ICCDP and ICLERP were set to their maximum allowable values in RG 1.177, and the CT_{NEW} allowable was calculated. ICLERP was determined to be the bounding parameter, and a CT_{NEW} value of 295 hours was calculated. This value represents significant margin, relative to the proposed CT extension.

The LSCS risk assessment also includes a qualitative assessment of external event risks in accordance with RG 1.174, paragraph 2.2.5.5, "Comparisons with Acceptance Guidelines."

This qualitative external events assessment used the external event analyses in the LaSalle Risk Methods Integration and Evaluation Program (RMIEP) study as a starting point.

EGC submitted the results of the RMIEP study to the NRC in 1994 as the basis for the LaSalle Individual Plant Examination (IPE)/ Individual Plant Examination of External Events (IPEEE) submittal. Each of the RMIEP external event evaluations were reviewed as part of the submittal and compared to the requirements of NUREG-1407, "Procedural and Submittal Guidance for the Individual Plant Examination of External Events (IPEEE) for Severe Accident

Vulnerabilities," dated June 1991. The NRC transmitted a Safety Evaluation for the LaSalle IPE/IPEEE submittal in 1996.

The qualitative external events assessment is described in Appendix A of Attachment 4, and summarized below.

Internal Fires

The impact on the internal fires risk profile due to the proposed change was evaluated using the following information sources:

- NUREG/CR-6850 , "EPRI Report 1011989, 'Fire PRA Methodology for Nuclear Power Facilities'," September 2005
- NUREG/CR-4832, Vol. 1, "Analysis of the LaSalle Unit 2 Nuclear Power Plant: Risk Methods Integration and Evaluation Program (RMIEP)," July 1992
- LS-PSA-021.06, "LaSalle Unit 2 FPRA Summary and Quantification Report," Rev. 0, December 2008
- Boiling Water Reactor Owners' Group (BWROG), "Assessment of NRC Information Notice 2007-07," October 16, 2007 (i.e., Appendix C of Attachments 4 and 5)

The assessment concluded that fire hazards can be appropriately screened as non-significant contributors to the risk assessment of the proposed SLC CT because of the low frequency of a fire coupled with a failure to scram.

Seismic

The impact on the seismic risk profile for LSCS, due to the proposed change was evaluated using the following information sources:

- NUREG/CR-4832, Vol. 1, "Analysis of the LaSalle Unit 2 Nuclear Power Plant: Risk Methods Integration and Evaluation Program (RMIEP)," July 1992
- NUREG-1150, "Severe Accident Risks: An Assessment for Five U.S. Nuclear Power Plants," December 1990

The assessment concluded that the seismic hazard can be appropriately screened as a non-significant contributor to the risk assessment of the proposed change.

Other External Hazards

Other external event risks such as external floods, severe weather, high winds or tornados, transportation accidents, nearby facility accidents, turbine missiles, and other miscellaneous external hazards were also considered in the LSCS IPEEE analysis. The LSCS site characteristics and design meet all the applicable criteria of NUREG-0800, "Standard Review Plan for the Review of Safety Analysis Reports for Nuclear Power Plants," (SRP). No significant quantitative contribution from these external events was identified by the LSCS IPEEE evaluations. As such, other

external hazards are appropriately screened as non-significant contributors to the risk assessment of the proposed CT.

Consistent with the ASME PRA Standard, quantitative parametric uncertainty analyses for both CDF and LERF were evaluated to determine if the point estimates calculated by the PRA model appropriately represent the means for the risk metrics that were evaluated. The results of these analyses are summarized in Appendix B of Attachment 4.

The parametric uncertainty analysis supports the use of the point estimate to represent the mean for the calculation of the changes in the risk metrics for the extended CT.

An assessment of modeling uncertainties is also documented in Appendix B of Attachment 4. This assessment includes LSCS-specific modeling uncertainty evaluations for the PRA Base Case and an examination of the specific cutsets that affect the change in the CDF risk metric associated with the change in the SLC CT extension. The results of the modeling uncertainty assessments do not change the conclusions of this risk assessment for the proposed SLC CT changes.

4.4.3 Tier 2, Avoidance of Risk Significant Plant Configurations

Tier 2 requires an examination of the need to impose additional restrictions when operating under the proposed CT in order to avoid risk-significant equipment outage configurations. Consistent with the guidance in Regulatory Position C.2.3 of RG 1.177, and as part of the LSCS risk assessment (i.e., Attachment 4), EGC performed an evaluation of equipment according to its contribution to plant risk while the equipment covered by the proposed CT change is out of service for test or maintenance (i.e., site-specific modeling uncertainty evaluations for the PRA base case and an examination of the specific cutsets that affect the change in the CDF risk metric associated with the change in the SLC CT extension).

This evaluation is provided in Attachment 4, Appendix B, "Uncertainty Analysis," section B.2, "Model Uncertainties Associated with SLC System Out of Service." This evaluation indicates that the scram system hardware failure is the most important contributor to the ΔCDF assessment for the SLC system out-of-service case.

Entry into the dual-train SLC CT will be assessed and managed in accordance with the EGC CRMP. The CRMP will assess the emergent condition, including the impact of any additional out-of-service equipment. With both SLC subsystems unavailable, the LSCS on-line risk would be depicted as "Orange," based on the deterministic assessment portion of the CRMP. In this condition, station procedures require senior management review and approval to remove equipment from service, as well as implementation of compensatory measures to reduce risk, including contingency plans.

4.4.4 Tier 3, Risk-Informed Configuration Risk Management

Tier 3 requires a proceduralized process to assess the risk associated with both planned and unplanned work activities. The objective of the third tier is to ensure that the risk impact of out-of-service equipment is evaluated prior to performing any maintenance activity. As stated in Section 2.3 of RG 1.177, "a viable program would be one that is able to uncover risk-significant plant equipment outage configurations in a timely manner during normal plant operation." The third-tier requirement is an extension of the second-tier requirement, but addresses the limitation of not being able to identify all possible risk-significant plant configurations in the Tier 2 evaluation.

EGC has developed and implemented a CRMP at LSCS. The CRMP is governed by station procedures that ensure the risk impact of out-of-service equipment is appropriately evaluated prior to performing any maintenance activity. These procedures require an integrated review to uncover risk-significant plant equipment outage configurations in a timely manner both during the work management process and for emergent conditions during normal plant operation. Appropriate consideration is given to equipment unavailability, operational activities like testing or load dispatching, and weather conditions. LSCS currently has the capability to perform a configuration dependent assessment of the overall impact on risk of proposed plant configurations prior to, and during, the performance of maintenance activities that remove equipment from service. Risk is re-assessed if an equipment failure/malfunction or emergent condition produces a plant configuration that has not been previously assessed.

For planned maintenance activities, an assessment of the overall risk of the activity on plant safety is currently performed prior to scheduled work. The assessment includes the following considerations.

- Maintenance activities that affect redundant and diverse structures, systems, and components (SSCs) that provide backup for the same function are minimized.
- The potential for planned activities to cause a plant transient are reviewed, and work on SSCs that are important in mitigating the transient are avoided.
- Work is not scheduled that is highly likely to exceed a TS or Technical Requirements Manual (TRM) Completion Time requiring a plant shutdown.
- For Maintenance Rule high risk significant SSCs, the impact of the planned activity on the unavailability performance criteria is evaluated.

A quantitative risk assessment is performed for those SSCs modeled in the LSCS PRA model to ensure that the activity does not pose any unacceptable risk. This evaluation is performed using the impact on both CDF and LERF. The results of the risk assessment are classified by a color code based on the increased risk of the activity. As postulated risk for the activity increases, appropriate actions are required and implemented. Emergent work is reviewed by shift operations to ensure that the work does not invalidate the assumptions

made during the work management process. EGC's PRA risk management procedure defines the requirements for ensuring that the PRA model used to evaluate on-line maintenance activities is an accurate model of the current plant design and operational characteristics.

Plant modifications and procedure changes are monitored, assessed, and dispositioned. Evaluation of changes in plant configuration or PRA model features are dispositioned by implementing PRA model changes or by the qualitative assessment of the impact of the change on the PRA assessment tool. Changes that have potential risk impact are recorded in an update requirements evaluations (URE) log for consideration in the next periodic PRA model update.

The reliability and availability of the SLC system, RPS, control rods, control rod drives, and the ARI system are monitored under the Maintenance Rule Program. If the pre-established reliability or availability performance criteria is exceeded for an instrumentation component, that component is considered for 10 CFR 50.65, "Requirements for monitoring the effectiveness of maintenance at nuclear power plants," paragraph (a)(1) actions, requiring increased management attention and goal setting in order to restore performance (i.e., reliability and availability) to an acceptable level. The performance criteria are risk-informed, and therefore are a means to manage the overall risk profile of the plant. An accumulation of large core damage probabilities over time is precluded by the performance criteria.

Evaluation of changes in plant configuration or PRA model features are dispositioned by implementing PRA model changes or by qualitatively assessing the impact of the changes on the CRMP assessment tool. Procedures exist for the control and application of CRMP assessment tools.

4.4.5 Technical Adequacy and Quality of PRA Model

As stated in Section 1.0 above, RG 1.200, Revision 1 describes an acceptable approach for determining whether the quality of the PRA, in total or the parts that are used to support an application, is sufficient to provide confidence in the results, such that the PRA can be used as an input in regulatory decision-making.

With respect to the risk assessment for the proposed SLC CT extension, EGC has documented this determination of PRA quality in Attachment 4. Table 2-1 of Attachment 4 provides a "RG 1.200 Analysis Actions Roadmap." This roadmap cross references the required RG 1.200 actions to the applicable sections in the attachment that address the actions, which are summarized below.

EGC employs a multi-faceted approach to establishing and maintaining the technical adequacy and plant fidelity of the PRA models for all operating EGC nuclear generation sites. This approach includes both a proceduralized PRA maintenance and update process, and the use of self-assessments and independent peer reviews.

The EGC risk management process for maintaining and updating the PRA ensures that the PRA model remains an accurate reflection of the as-built and as-operated plants. This process is defined in the EGC Risk Management

program, which consists of a governing procedure (i.e., ER-AA-600, "Risk Management") and subordinate Technical & Reference Material (T&RM) documents. EGC T&RM ER-AA-600-1015, "FPIE PRA Model Update" delineates the responsibilities and guidelines for updating the full power internal events PRA models at all operating EGC nuclear generation sites.

The overall EGC Risk Management program, including ER-AA-600-1015, defines the process for implementing regularly scheduled and interim PRA model updates, for tracking issues identified as potentially affecting the PRA models (e.g., changes in the plant, errors or limitations identified in the model, industry operating experience), and for controlling the model and associated computer files.

5.0 REGULATORY ANALYSIS

5.1 No Significant Hazards Consideration

According to 10 CFR 50.92, "Issuance of amendment," paragraph (c), a proposed amendment to an operating license involves no significant hazards consideration if operation of the facility in accordance with the proposed amendment would not:

(1) Involve a significant increase in the probability or consequence of an accident previously evaluated;

(2) Create the possibility of a new or different kind of accident from any accident previously evaluated; or

(3) Involve a significant reduction in a margin of safety.

Exelon Generation Company, LLC (EGC) has evaluated the proposed changes to the Technical Specifications (TS) for LaSalle County Station (LSCS), Units 1 and 2 using the criteria in 10 CFR 50.92 and has determined that the proposed changes do not involve a significant hazards consideration. EGC is providing the following information to support a finding of no significant hazards consideration.

(1) Does the proposed amendment involve a significant increase in the probability or consequences of an accident previously evaluated?

Response: No.

The proposed amendment revises Technical Specification (TS) 3.1.7, "Standby Liquid Control (SLC) System," to extend the completion time (CT) associated with Condition B (i.e., "Two SLC subsystems inoperable.") from eight hours to 72 hours.

The proposed change is based on a risk-informed evaluation performed in accordance with Regulatory Guides (RG) 1.174, "An Approach for Using Probabilistic Risk Assessment in Risk-Informed Decisions On Plant-Specific Changes to the Licensing Basis," and RG 1.177, "An Approach for Plant-Specific, Risk-Informed Decision-making: Technical Specifications."

The proposed amendment modifies an existing CT for a dual-train SLC system inoperability. The condition evaluated, the action requirements, and the associated CT do not impact any initiating conditions for any accident previously evaluated.

The proposed amendment does not increase postulated frequencies or the analyzed consequences of an Anticipated Transient Without Scram (ATWS). Requirements associated with 10 CFR 50.62 will continue to be met. In addition, the proposed amendment does not increase postulated frequencies or the analyzed consequences of a large-break loss-of-coolant accident for which the SLC system will be used for pH control (i.e., upon NRC approval of an August 26, 2008 proposed LSCS license amendment regarding the adoption of an alternate source term methodology). The extended CT provides additional time to implement actions in response to a dual-train SLC system inoperability, while also minimizing the risk associated with continued operation. Therefore, the proposed change does not involve a significant increase in the probability or consequences of an accident previously evaluated.

(2) Does the proposed amendment create the possibility of a new or different kind of accident from any accident previously evaluated?

Response: No.

The proposed amendment revises TS 3.1.7 to extend the CT associated with Condition B from eight hours to 72 hours. The proposed amendment does not involve any change to plant equipment or system design functions. This proposed TS amendment does not change the design function of the SLC system and does not affect the system's ability to perform its design function. The SLC system provides a method to bring the reactor, at any time in a fuel cycle, from full power and minimum control rod inventory to a subcritical condition with the reactor in the most reactive xenon free state without taking credit for control rod movement. Required actions and surveillance requirements are sufficient to ensure that the SLC system functions are maintained. No new accident initiators are introduced by this amendment. Therefore, the proposed amendment does not create the possibility of a new or different kind of accident from any previously evaluated.

(3) Does the proposed amendment involve a significant reduction in a margin of safety?

Response: No.

The proposed amendment revises TS 3.1.7 to extend the CT associated with Condition B from eight hours to 72 hours. The proposed amendment does not involve any change to plant equipment or system design functions. The margin of safety is established through the design of the plant structures, systems, and components, the parameters within which the plant is operated, and the setpoints for the actuation of equipment relied upon to respond to an event.

Safety margins applicable to the SLC system include pump capacity, boron concentration, boron enrichment, and system response timing. The proposed amendment does not modify these safety margins or the point at which SLC is manually initiated, nor does it affect the system's ability to perform its design function. In addition, the proposed change complies with the intent of the defense-in-depth philosophy and the principle that sufficient safety margins are maintained, consistent with RG 1.177 requirements (i.e., Section C, "Regulatory Position," paragraph 2.2, "Traditional Engineering Considerations").

Based on the above analysis, EGC concludes that the proposed amendment presents no significant hazards consideration under the standards set forth in 10 CFR 50.92(c), and, accordingly, a finding of "no significant hazards consideration" is justified.

5.2 Applicable Regulatory Requirements/Criteria

10 CFR 50.62, "Requirements for reduction of risk from anticipated transients without scram (ATWS) events for light-water-cooled nuclear power plants"

10 CFR 50.62 (c)(4) states that boiling water reactors are required to have a standby liquid control (SLC) system with the capability of injecting, into the reactor pressure vessel (RPV), a borated water solution with a flow rate, boron concentration, and boron-10 enrichment that would be necessary to ensure that the resulting reactivity control is at least equivalent to that resulting from injection of 86 gallons per minute of 13 weight percent sodium pentaborate decahydrate solution at the natural boron-10 isotope abundance into a 251-inch inside diameter reactor pressure vessel for a given core design. Furthermore, the SLC system and its injection location must be designed to perform its function in a reliable manner. The proposed change will not impact the ability of the LSCS SLC system to ensure compliance with these requirements.

10 CFR 50.67, "Accident source term"

10 CFR 50.67.b(1) provided guidance to licensees with respect to revision of the licensee's current accident source term in design basis radiological consequence analyses. Specifically, the regulation states that in order to revise the accident source term, a licensee shall apply for a license amendment under 10 CFR 50.90 and that the application shall contain an evaluation of the consequences of applicable design basis accidents previously analyzed in the safety analysis report.

By letter dated August 26, 2008, EGC requested an amendment to the LSCS TS regarding the adoption of an alternate source term (AST) methodology. The NRC is currently reviewing the proposed license amendment. As part of the proposed AST methodology, EGC will use the SLC system to inject sodium pentaborate into the RPV following a loss-of-coolant accident (LOCA) in order to maintain suppression pool pH above 7 (i.e., in order to ensure against re-evolution of elemental iodine).

As such, the SLC will be required to be operable in Mode 3 to ensure that offsite doses remain within the limits of 10 CFR 50.67, "Accident source term" following a LOCA involving significant fission product releases. Additional redundancy for the injection of boron into the reactor coolant system is established by the LSCS Emergency Operating

Procedures (EOPs). The EOPs describe the actions and criteria for manual addition of boron into the reactor coolant water cleanup system, should RPS, the control rods, the control rod drive system, and the SLC system be unable to perform the specifed design functions. Therefore, the proposed SLC CT extension will not impact the ability of LSCS to comply with the requirements of 10 CFR 50.67.

10 CFR 50, Appendix A, "General Design Criteria for Nuclear Power Plants," Criterion (GDC) 26, "Reactivity control system redundancy and capability"

GDC 26 requires the provision of two independent reactivity control systems of different design principles. While one of the systems shall use control rods, the second reactivity control system shall be capable of reliably controlling the rate of reactivity changes resulting from planned, normal power changes (including xenon burnout) to assure acceptable fuel design limits are not exceeded. The proposed change will not impact the ability of the LSCS SLC system to ensure compliance with this requirement.

Regulatory Guide (RG) 1.174, "An Approach for Using Probabilistic Risk Assessment in Risk-Informed Decisions on Plant-Specific Changes to the Licensing Basis"

RG 1.177, "An Approach for Plant-Specific, Risk-Informed Decision-making: Technical Specifications"

RG 1.200, "An Approach for Determining the Technical Adequacy of Probabilistic Risk Assessment Results for Risk-Informed Activities," Revision 1

Regulatory Guide (RG) 1.174, "An Approach for Using Probabilistic Risk Assessment in Risk-Informed Decisions on Plant-Specific Changes to the Licensing Basis," specifies risk-informed acceptance guidelines for a permanent TS change. These acceptance guidelines are presented for two ranges of risk impacts, those described as "small changes" and those described as "very small changes."

The RG 1.174 acceptance guidelines prescribe that the risk metrics of delta (Δ) CDF and ΔLERF be less than 1.0E-06/yr and 1.0E-07/yr, respectively, to establish a very small risk increase with no additional compensatory measures required. RG 1.174, paragraph 2.2.5.5, "Comparisons with Acceptance Guidelines," also specifies guidelines for consideration of external events, and stipulates that external events can be evaluated in either a qualitative or quantitative manner.

RG 1.177, "An Approach for Plant-Specific, Risk-Informed Decision-making: Technical Specifications," identifies a three-tiered approach for the evaluation of the risk associated with a proposed TS change.

RG 1.200, "An Approach for Determining the Technical Adequacy of Probabilistic Risk Assessment Results for Risk-Informed Activities," Revision 1 describes an acceptable approach for determining whether the quality of the PRA, in total or the parts that are used to support an application, is sufficient to provide confidence in the results, such that the PRA can be used in regulatory decision-making for light-water reactors.

The proposed change complies with the acceptance guidelines and requirements of RG 1.174, RG 1.177, and RG 1.200 to demonstrate a very small change in risk.

Regulatory Summary

Based on the considerations discussed above, (1) there is reasonable assurance that the health and safety of the public will not be endangered by operation in the proposed manner, (2) such activities will be conducted in compliance with the NRC's regulations, and (3) the issuance of the amendment will not be inimical to the common defense and security or to the health and safety of the public.

6.0 ENVIRONMENTAL CONSIDERATION

EGC has determined that the proposed amendment would change a requirement with respect to installation or use of a facility component located within the restricted area, as defined in 10 CFR 20, "Standards for Protection Against Radiation." However, the proposed amendment does not involve: (i) a significant hazards consideration, (ii) a significant change in the types or significant increase in the amounts of any effluent that may be released offsite, or (iii) a significant increase in individual or cumulative occupational radiation exposure. Accordingly, the proposed amendment meets the eligibility criterion for categorical exclusion set forth in 10 CFR 51.22, "Criterion for categorical exclusion; identification of licensing and regulatory actions eligible for categorical exclusion or otherwise not requiring environmental review," paragraph (c)(9). Therefore, pursuant to 10 CFR 51.22(b), no environmental impact statement or environmental assessment need be prepared in connection with the proposed amendment.

7.0 REFERENCES

1. Letter from P. R. Simpson (Exelon Generation Company, LLC) to U. S. NRC, "Request for License Amendment Regarding Application of Alternative Source Term," dated August 26, 2008
2. Letter from M. A. Satorius (U. S. NRC) to C. M. Crane (Exelon Generation Company, LLC), "Notice of Enforcement Discretion for Exelon Generation Company LLC Regarding Quad Cities Nuclear Power Station, Unit 1 (NOED 06-3-01)," dated October 18, 2006
3. Letter from M. A. Satorius (U. S. NRC) to C. M. Crane (Exelon Generation Company, LLC), "Notice of Enforcement Discretion for Exelon Generation Company LLC Regarding Dresden Nuclear Power Station, Unit 2 (NOED 07-3-01; TAC MD4044)," dated January 24, 2007

ATTACHMENT 2

Proposed Markup of LSCS Technical Specification 3.1.7

TS Page

3.1.7-1

3.1 REACTIVITY CONTROL SYSTEMS

3.1.7 Standby Liquid Control (SLC) System

LCO 3.1.7 Two SLC subsystems shall be OPERABLE.

72

APPLICABILITY: MODES 1 and 2.

ACTIONS

CONDITION	REQUIRED ACTION	COMPLETION TIME
A. One SLC subsystem inoperable.	A.1 Restore SLC subsystem to OPERABLE status.	7 days
B. Two SLC subsystems inoperable.	B.1 Restore one SLC subsystem to OPERABLE status.	~~8~~ hours
C. Required Action and associated Completion Time not met.	C.1 Be in MODE 3.	12 hours

SURVEILLANCE REQUIREMENTS

SURVEILLANCE		FREQUENCY
SR 3.1.7.1	Verify available volume of sodium pentaborate solution is within the limits of Figure 3.1.7-1.	24 hours

(continued)

Attachment 3

Proposed Markup of LSCS Technical Specification Bases B 3.1.7

TS Bases Pages

B 3.1.7-3

B 3.1.7-6

BASES

ACTIONS

A.1 (continued)

the remaining OPERABLE subsystem could result in reduced SLC System shutdown capability and inability to meet the requirements of Reference 1. The 7 day Completion Time is based on the availability of an OPERABLE subsystem capable of performing the unit shutdown function and the low probability of a Design Basis Accident (DBA) or severe transient occurring concurrent with the failure of the Control Rod Drive System to shut down the reactor.

B.1

72

72

If both SLC subsystems are inoperable, at least one subsystem must be restored to OPERABLE status within ~~8~~ hours. The allowed Completion Time of ~~8~~ hours is considered acceptable, given the low probability of a DBA or transient occurring concurrent with the failure of the control rods to shut down the reactor.

(Ref. 3)

C.1

If any Required Action and associated Completion Time is not met, the plant must be brought to a MODE in which the LCO does not apply. To achieve this status, the plant must be brought to MODE 3 within 12 hours. The allowed Completion Time of 12 hours is reasonable, based on operating experience, to reach MODE 3 from full power conditions in an orderly manner and without challenging plant systems.

SURVEILLANCE REQUIREMENTS

SR 3.1.7.1, SR 3.1.7.2, and SR 3.1.7.3

SR 3.1.7.1 through SR 3.1.7.3 are 24 hour Surveillances, verifying certain characteristics of the SLC System (e.g., the volume and temperature of the borated solution in the storage tank), thereby ensuring the SLC System OPERABILITY without disturbing normal plant operation. These Surveillances ensure the proper borated solution and temperature, including the temperature (using the local indicator) of the pump suction piping up to the storage tank outlet valves, are maintained. Maintaining a minimum specified borated solution temperature is important in

(continued)

BASES

SURVEILLANCE REQUIREMENTS

SR 3.1.7.8 and SR 3.1.7.9 (continued)

should be alternated such that both complete flow paths are tested every 48 months, at alternating 24 month intervals. The Surveillance may be performed in separate steps to prevent injecting boron into the RPV. An acceptable method for verifying flow from the pump to the RPV is to pump demineralized water from a test tank through one SLC subsystem and into the RPV. The 24 month Frequency is based on the need to perform this Surveillance under the conditions that apply during a plant outage and the potential for an unplanned transient if the Surveillance were performed with the reactor at power. Operating experience has shown these components usually pass the Surveillance test when performed at the 24 month Frequency; therefore, the Frequency was concluded to be acceptable from a reliability standpoint.

Demonstrating that all heat traced piping in the flow path between the boron solution storage tank and the storage tank outlet valves to the injection pumps is unblocked ensures that there is a functioning flow path for injecting the sodium pentaborate solution. An acceptable method for verifying that the suction piping up to the storage tank outlet valves is unblocked is to verify flow from the storage tank to the test tank. Upon completion of this verification, the pump suction piping between the storage tank outlet valve and pump suction must be drained and flushed with demineralized water, since the piping is not heat traced. The 24 month Frequency is acceptable since there is a low probability that the subject piping will be blocked due to precipitation of the boron from solution in the heat traced piping. This is especially true in light of the daily temperature verification of this piping required by SR 3.1.7.3. However, if, in performing SR 3.1.7.3, it is determined that the temperature of this piping has fallen below the specified minimum, SR 3.1.7.9 must be performed once within 24 hours after the piping temperature is restored within the limits of Figure 3.1.7-2.

3. RM Documentation No. LS-LAR-01, Revision 0, "Risk Assessment Input for LaSalle Technical Specification Change for Standby Liquid Control System Completion Time from 8 hours to 72 hours," December 28, 2009

REFERENCES

1. 10 CFR 50.62.

2. UFSAR, Section 9.3.5.3.

Attachment 4

RM Documentation No. LS-LAR-01, Revision 0

RM DOCUMENTATION NO. LS-LAR-01 **REV: 0** **PAGE NO. 1**

STATION: LaSalle

UNIT(S) AFFECTED: Units 1 and 2

TITLE: Risk Assessment Input for LaSalle Technical Specification Change for Standby Liquid Control System Completion Time from 8 hours to 72 hours

SUMMARY: This assessment is performed in support of the license amendment request (LAR) submittal to extend the Technical Specification 3.1.7, Condition B Completion Time (CT) for the Standby Liquid Control (SLC) System from 8 hours to 72 hours.

The risk assessment is performed in accordance with ER-AA-600-1046, Rev. 4, Risk Metrics – NOED and LAR

No UREs have been created as a result of this application.

[ ] Review required after periodic Update

[X] **Internal RM Documentation** [ ] **External RM Documentation**

Electronic Calculation Data Files:

Method of Review: [X] Detailed [ ] Alternate [ ] Review of External Document

This RM documentation supersedes: N/A **in its entirety.**

Prepared by:	L. K. Lee/R A Narain	Lawrence for RAN (Sign)	12/23/09 12/23/09 (Date)
Reviewed by:	R A Hill	(Sign)	12/23/09 (Date)
Reviewed by:	G A Teagarden	(Sign)	12/23/09 (Date)
Reviewed by:	V M Andersen (Model Owner)	(Sign)	12/23/09 (Date)
Approved by:	E T Burns	(Sign)	12-28-09 (Date)

TABLE OF CONTENTS

Section Page

1.0 INTRODUCTION 2
- 1.1 Purpose 2
- 1.2 Background 2
- 1.3 SLC Technical Specifications 3
- 1.4 Regulatory Guides 3
- 1.5 Scope 6
- 1.6 LaSalle PRA Model 7

2.0 ANALYSIS ROADMAP AND REPORT ORGANIZATION 9

3.0 TIER 1 RISK ASSESSMENT 10
- 3.1 Key Assumptions 10
- 3.2 Internal Events 11
- 3.3 Results Comparison to Acceptance Guidelines 13
- 3.4 External Events 14
- 3.5 Uncertainty Assessment 15
- 3.6 Risk Summary 15

4.0 TECHNICAL ADEQUACY OF THE PRA MODEL 17
- 4.1 PRA Quality Overview 17
- 4.2 Scope 19
- 4.3 Fidelity: PRA Maintenance and Update 19
- 4.4 Standards 20
- 4.5 Peer Review and PRA Self-Assessment 20
- 4.6 Appropriate PRA Quality 22
- 4.7 General Conclusion Regarding PRA Capability 39

5.0 SUMMARY AND CONCLUSIONS 40
- 5.1 Scope Investigated 40
- 5.2 PRA Quality 40
- 5.3 Quantitative Results vs. Acceptance Guidelines 41
- 5.4 Conclusions 41

6.0 REFERENCES 42

APPENDICES
- A EXTERNAL EVENT ASSESSMENT
- B UNCERTAINTY ANALYSIS
- C BWROG ASSESSMENT OF NRC INFORMATION NOTICE 2007-07

1.0 INTRODUCTION

1.1 PURPOSE

The purpose of this analysis is to assess the acceptability, from a risk perspective, of a change to the LaSalle Technical Specification (TS) for the Standby Liquid Control (SLC) system to increase the Completion Time (CT), sometimes called the allowed outage time (AOT), from 8 hours to 72 hours when both SLC subsystems (i.e., both trains) are inoperable. An extension will provide flexibility during power operation in the performance of corrective maintenance, preventive maintenance, and surveillance testing of SLC system components that would cause the system to be inoperable. Consistent with the NRC's approach to risk-informed regulation, Exelon Generating Company (EGC), has identified a particular TS requirement that is very restrictive in its nature and, if relaxed, has a minimal impact on the safety of the plant. The LaSalle analysis is consistent with similar analyses being conducted for all EGC Boiling Water Reactor (BWR) plants that currently have an 8 hour CT for the SLC system.

1.2 BACKGROUND

1.2.1 Technical Specification Changes

Since the mid-1980s, the NRC has been reviewing and granting improvements to TS that are based, at least in part, on probabilistic risk assessment (PRA) insights. In its final policy statement on TS improvements of July 22, 1993, the NRC stated that it . . .

> *. . . expects that licensees, in preparing their Technical Specification related submittals, will utilize any plant-specific PSA or risk survey and any available literature on risk insights and PSAs. . . Similarly, the NRC staff will also employ risk insights and PSAs in evaluating Technical Specifications related submittals. Further, as a part of the Commission's ongoing program of improving Technical Specifications, it will continue to consider methods to make better use of risk and reliability information for defining future generic Technical Specification requirements.*

The NRC reiterated this point when it issued the revision to 10 CFR 50.36, "Technical Specifications," in July 1995. In August 1995, the NRC adopted a final policy statement on the use of PRA methods in nuclear regulatory activities that encouraged greater use of PRA to improve safety decision-making and regulatory efficiency. The PRA policy statement included the following points:

1. The use of PRA technology should be increased in all regulatory matters to the extent supported by the state of the art in PRA methods and data and in a manner that complements the NRC's deterministic approach and supports the NRC's traditional defense-in-depth philosophy.

2. PRA and associated analyses (e.g., sensitivity studies, uncertainty analyses, and importance measures) should be used in regulatory matters, where practical within the bounds of the state of the art, to reduce unnecessary conservatism associated with current regulatory requirements.
3. PRA evaluations in support of regulatory decisions should be as realistic as practicable and appropriate supporting data should be publicly available for review.

The movement of the NRC to more risk-informed regulation has led to the NRC identifying Regulatory Guides and associated processes by which licensees can submit changes to the plant design basis including Technical Specifications. Regulatory Guides 1.174 [Ref. 2] and 1.177 [Ref. 3] both provide processes to incorporate PRA input for decision makers regarding a Technical Specification modification.

LaSalle, other EGC plants, and numerous other commercial nuclear plants in the industry have used these risk-informed guidelines to support both permanent and one-time CT extensions for EDGs, Emergency Service Water, and other systems.

1.2.2 Exelon SLC Experiences

In October 2006 (Quad Cities) and January 2007 (Dresden), EGC requested Notices of Enforcement Discretion (NOEDs) for SLC System Tank leaks allowing an additional 72 hours to the original 8-hour completion time required for a dual-train inoperability. These NOEDs were approved by the NRC. An extended CT would preempt the need for such NOEDs.

1.3 SLC TECHNICAL SPECIFICATIONS

The proposed TS change involves extending the completion time for TS 3.1.7 Condition B from 8 hours (current TS) to 72 hours (proposed TS). Condition B is the situation where both SLC subsystems are inoperable. Technical Specification requirements for other SLC conditions will remain unchanged. For LaSalle, the TS Condition B applies to Modes 1 and 2 for reactivity control. Consideration of TS applicability for Modes 1, 2, and 3 for pH control is not addressed in this report.

1.4 REGULATORY GUIDES

Three Regulatory Guides provide primary inputs to the evaluation of a Technical Specification change. Their relevance is discussed in this section.

1.4.1 Regulatory Guide 1.174

Regulatory Guide 1.174 [Ref. 2] specifies an approach and acceptance guidelines for use of PRA in risk informed activities. RG 1.174 outlines PRA related acceptance guidelines for use of PRA metrics of Core Damage Frequency (CDF) and Large Early Release Frequency (LERF) for the evaluation of permanent TS changes. The guidelines given in RG 1.174 for determining what constitutes an acceptable permanent change specify that the ΔCDF and the ΔLERF associated with the change should be less than specified values, which are dependent on the baseline CDF and LERF, respectively. These specified values of ΔCDF and ΔLERF are given in RG 1.174 Figures 3 and 4, respectively. These values are presented for two ranges of risk impacts, those described as "small changes" and those described as "very small changes". The acceptance guidelines for "very small changes" are utilized in this risk assessment.

Based on the LS06C (i.e., LaSalle PRA model from the 2006 PRA update, Revision C) baseline internal events CDF of 4.0E-6/yr and LERF of 3.0E-7/yr for LaSalle, the RG 1.174 acceptance guidelines prescribed that the risk metrics of ΔCDF and ΔLERF be less than 1.0E-06/yr and 1.0E-07/yr, respectively, to establish a very small risk increase with no additional compensatory measures required.

RG 1.174 also specifies guidelines for consideration of external events. External events can be evaluated in either a qualitative or quantitative manner.

1.4.2 Regulatory Guide 1.177

Regulatory Guide 1.174 [Ref. 2] specifies an approach and acceptance guidelines for the evaluation of plant licensing basis changes. RG 1.177 identifies a three-tiered approach for the evaluation of the risk associated with a proposed TS change as identified below.

- Tier 1 is an evaluation of the plant-specific risk associated with the proposed TS change, as shown by the change in core damage frequency (CDF) and incremental conditional core damage probability (ICCDP). Where applicable, containment performance should be evaluated on the basis of an analysis of large early release frequency (LERF) and incremental conditional large early release frequency (ICLERP). The acceptance guidelines given in RG 1.177 for determining an acceptable TS change is that the ICCDP and the ICLERP associated with the change should be less than 5E-07 and 5E-08, respectively.
- Tier 2 identifies and evaluates, with respect to defense-in-depth, any potential risk-significant plant equipment outage configurations associated with the proposed change. The licensee should provide reasonable assurance that risk-significant plant equipment outage configurations will

not occur when equipment associated with the proposed TS change is out-of-service.

- Tier 3 provides for the establishment of an overall configuration risk management program (CRMP) and confirmation that its insights are incorporated into the decision-making process before taking equipment out-of-service prior to or during the CT. Compared with Tier 2, Tier 3 provides additional coverage based on any additional risk significant configurations that may be encountered during maintenance scheduling over extended periods of plant operation. Tier 3 guidance can be satisfied by the Maintenance Rule (10 CFR 50.65(a)(4)), which requires a licensee to assess and manage the increase in risk that may result from activities such as surveillance, testing, and corrective and preventive maintenance.

This risk analysis supports the Tier 1 element of RG 1.177, specifically the acceptance guidelines for ICCDP and ICLERP for permanent changes associated with changing a Technical Specification Completion Time. Other portions of the LAR submittal will address Tier 2 and Tier 3 elements.

1.4.3 Regulatory Guide 1.200, Revision 1

Regulatory Guide 1.200, Rev. 1 [Ref 1], describes an acceptable approach for determining whether the quality of the PRA, in total or the parts that are used to support an application, is sufficient to provide confidence in the results, such that the PRA can be used in regulatory decision-making for light-water reactors. This guidance is intended to be consistent with the NRC's PRA Policy Statement and more detailed guidance in Regulatory Guide 1.174.

It is noted that RG 1.200 Rev. 1 endorses Addendum B of the ASME PRA Standard [Ref. 5] applicable to full power internal event (FPIE) PRA models. Since that time, the new ASME/ANS Combined PRA Standard [Ref. 26] has been released. Although the Combined Standard is presently issued and endorsed by RG 1.200 Revision 2 [Ref. 27], neither of these document revisions impact this analysis.

1.4.4 Acceptance Criteria

Based on the guidance provided in Regulatory Guides 1.174 and 1.177, the following quantitative PRA related acceptance criteria are utilized in this risk analysis:

- ΔCDF < 1.0E-06/yr
- ΔLERF < 1.0E-07/yr
- ICCDP < 5.0E-07
- ICLERP < 5.0E-08

1.5 SCOPE

This section addresses the requirements of RG 1.200, Rev. 1 Section 3.2 which directs to licensee to define the treatment of the scope of risk contributors (i.e., internal initiating events, external initiating events, and modes of power operation at the time of the initiator). Discussion of these risk contributors are as follows:

- Full Power Internal Events (FPIE) – The LaSalle LS06C PRA model used for this analysis includes a full range of internal initiating events (including internal flooding) for at-power configurations. The SLC system is credited in the PRA for criticality control. The FPIE model is further discussed in Section 1.6.
- Low Power Operation - The FPIE assessment is judged to adequately capture risk contributors associated with low power plant operations. The FPIE analysis assumes that the plant is at full power at the time of any internal events transient, manual shutdown, or accident initiating event. This analytic approach results in conservative accident progression timings and systemic success criteria compared to what may otherwise be applicable to an initiator occurring at low power. As such, low power risk impacts are not discussed further in this risk assessment.
- Shutdown / Refueling – In consideration of shutdown and refueling modes (i.e., Modes 3, 4, and 5), the SLC TS does not apply. As such, shutdown risk impacts are not discussed further in this risk assessment.
- Internal Fires - An interim fire PRA is available for LaSalle. The LaSalle Interim Fire PRA [Ref. 10], the LaSalle RMIEP study [Ref. 11], and a BWROG assessment [Ref. 19] are used to provide qualitative and semi-quantitative insights to the analysis (refer to Section 3.4.1).
- Seismic - Consistent with most sites, LaSalle does not currently maintain a Seismic PRA. A qualitative assessment is performed in this analysis (refer to Section 3.2) based on insights from the LaSalle RMIEP study [Ref. 11] and other industry studies.
- Other External Events - Other external event risks were assessed in the LaSalle RMIEP study [Ref. 11] and LaSalle IPEEE and found to be insignificant risk contributors (refer to Section 3.4.3).

1.6 LASALLE PRA MODEL

This section addresses the requirements of Section 3.1 of RG 1.200, Rev. 1 which directs the licensee to identify the portions of the PRA used in the analysis.

The PRA analysis for the TS change uses the LaSalle Unit 2 LS06C full power internal events Level 1 Core Damage Frequency (CDF) model and the associated Level 2 Large Early Release Frequency (LERF) model to calculate the risk metrics.

This risk assessment applies to both LaSalle Unit 1 and LaSalle Unit 2. Both units are very similar and the risk impact of this TS change is minor such that use of the LS06C Unit 2 PRA model to reflect the risk impact of this TS on either unit is reasonable and acceptable. Unit 2 is considered the "base" model for the 2006C update. The Unit 1 model is created by converting the Unit 2 model. Table 1-1 shows the CDF and LERF risk metrics for both units.

Table 1-1

COMPARISON OF UNIT 1 AND UNIT 2 RISK METRICS (FULL POWER INTERNAL EVENTS MODEL)

Risk Metric	Unit 1	Unit 2	Percent Difference
CDF	3.9724E-6	3.9846E-6	ε
LERF	2.9694E-7	2.9694E-7	ε

The CDF and LERF for both units are essentially identical. As such, the use of the LS06C Unit 2 PRA model to reflect the risk impact of this TS change on either unit is reasonable and acceptable.

This analysis is specific to the SLC System and therefore the SLC system fault tree model is the only portion of the LS06C PRA model modified for this risk application. The LaSalle SLC system is a manually initiated system with enriched boron used to allow a single SLC pump to meet the 10 CFR 50.62 requirements for ATWS response. The PRA analysis involved identifying the system and components or maintenance activities modeled in the PRA which are most appropriate for use in setting both subsystems of SLC to be inoperable. As discussed later in Section 3.1, the model parameter 2SYPM-SLA-SLBM--, "SBLC A AND SBLC B IN COINCIDENT MAINTENANCE", was selected as an appropriate parameter to adjust to make the entire SLC system unavailable in the PRA (to reflect SLC inoperable and entry into TS 3.1.7, Condition B).

No other aspect of the LS06C PRA model required adjustment for this risk application. The entire LS06C PRA model is quantified for this assessment using the “average maintenance” PRA model (i.e., no portions of the at-power internal events LS06C model were excluded or zeroed out of the quantification).

2.0 ANALYSIS ROADMAP AND REPORT ORGANIZATION

The analysis and documentation utilizes the guidance provided in RG 1.200, Revision 1 [Ref. 1]. Table 2-1 summarizes the RG 1.200 identified actions and the corresponding location of that analysis or information in this report.

Table 2-1

RG 1.200 ANALYSIS ACTIONS ROADMAP

RG 1.200 Actions	Report Section
1. Identify the parts of the PRA used to support the application	Section 3
1.a Systems, structures and components (SSCs), operational characteristics affected by the application, and how these are implemented in the PRA model	Section 3.2
1.b Acceptance criteria used for the application	Section 1.4.4
2. Identify the scope of risk contributors addressed by the PRA model. If not full scope (i.e., internal and external events), identify appropriate compensatory measures or provide bounding arguments to address the risk contributors not addressed by the model.	Section 1.5
3. Summarize the risk assessment methodology used to assess the risk of the application. Include how the PRA model was modified to appropriately model the risk impact of the change request.	Section 3
4. Demonstrate the Technical Adequacy of the PRA.	Section 4
4.a Identify plant changes (design or operational practices) that have been incorporated at the site, but are not yet in the PRA model and justify why the change does not impact the PRA results used to support the application.	Section 4.6.1
4.b Document that the parts of the PRA used in the decision are consistent with applicable standards endorsed by the RG (currently, in RG 1.200 Rev. 1. RG 1.200 Rev. 1 addresses the internal events ASME PRA standard). Provide justification to show that where specific requirements in the standard are not met, it will not unduly impact the results.	Section 4.6
4.c Document PRA peer review findings and observations that are applicable to the parts of the PRA required for the application, and for those that have not yet been addressed justify why the significant contributors would not be impacted.	Section 4.5
4.d Identify key assumptions and approximations relevant to the results used in the decision-making process.	Section 3.1

3.0 TIER 1 RISK ANALYSIS

This section evaluates the plant-specific risk associated with the proposed TS change, based on the risk metrics of CDF, ICCDP, LERF, and ICLERP.

3.1 KEY ASSUMPTIONS

The following inputs and general assumptions are used estimating the plant risk due to the proposed SLC System CT extension.

a. The SLC System CT is assumed to increase from its current duration of 8 hours to a proposed duration of 72 hours.

b. The base analysis in this risk assessment assumes one entry per year into the proposed CT. The duration of the proposed CT is assumed to be adequate for performing the majority of corrective maintenance, preventive maintenance, and surveillance testing on-line. A historical analysis of unavailability data dating back to 2004 shows that the SLC system outages for the entire five year period were at most, 62.95 hours (for Unit 2, Train B). Average yearly unavailabilities for Unit 1, Trains A and B were 4.4 hours and 12.3 hours respectively, and 6.3 hours and 12.6 hours for Unit 2, Trains A and B respectively. Thus, any impact from extending the CT is assumed to be negligible, and it is conservatively assumed that the outage will not be entered more than once a year.

   Additionally, Configuration Risk Management at LaSalle is governed by the Maintenance Rule (10 CFR 50.65(a)(4)). A sensitivity analysis of the FPIE risk associated with entering the CT was performed, and showed that the SLC system outage could be taken out of service for up to 295 hours before the very small risk increase metrics of RG 1.174 and RG 1.177 are exceeded. This represents a significant margin compared to the proposed 72 hour CT. As stated above, the historical analysis of unavailability data shows that the SLC system does not exceed this ceiling value.

c. This risk assessment does not credit the averted risk due to a forced shutdown that would be required due to exceeding the existing CT.

d. The model manipulations were performed on the Unit 2 model. The results for Unit 1 are expected to generate essentially identical results.

3.2 INTERNAL EVENTS

The LaSalle 2006C PRA model[1] [Ref. 4] was examined to determine which PRA basic event to modify to reflect the unavailability of both SLC subsystems. The applicable basic event for the 2006C PRA model was identified as 2SYPM-SLA-SLBM--, "SBLC A AND SBLC B IN COINCIDENT MAINTENANCE." This event is appropriate because it fails both SLC subsystems and no other equipment in the model.

Event 2SYPM-SLA-SLBM-- was set to a binary logic value of "TRUE" (using a quantification flag file) and the entire LS06C model was requantified using the same PRA software codes and revisions as used for the base LS06C model [Ref. 4]. These configuration specific CDF and LERF values are used in conjunction with the base LS06C values to calculate the risk impacts of the proposed TS change.

The calculations of ΔCDF, ICCDP, ΔLERF and ICLERP for the CT change are determined as shown below.

The ΔCDF to be compared to the RG 1.174 acceptance guidelines is given by (as defined by [Ref. 21]):

$$\Delta CDF = CDF_{NEW} - CDF_{BASE} \qquad \text{[Equation 3-1]}$$

ΔCDF is the difference between the annual average CDF with the CT extended and the CDF with the current CT. The ΔCDF has units of "per reactor year."

In the above equation, CDF_{NEW} is equal to:

$$CDF_{NEW} = CT_{SLC\text{-}OOS} * CDF_{SLC\text{-}OOS} + [(1-CT_{SLC\text{-}OOS}) * CDF_{BASE}] \qquad \text{[Equation 3-2]}$$

Where:

$CDF_{SLC\text{-}OOS}$ = the annual average CDF calculated with both SLC subsystems out of service (2SYPM-SLA-SLBM-- set to True)

CDF_{BASE} = baseline annual average CDF with average unavailability for all equipment. This is the CDF result of the LS06C baseline PRA.

$CT^{H}_{SLC-OOS}$ = the new extended CT as an annual unavailability (i.e., 72 hours / 8760 hours/yr = 8.2E-03 yr)

$CT_{SLC\text{-}OOS}$ = the new extended CT as a probability (i.e., 72 hours / 8760 hours = 8.2E-03)

[1] The LS06C baseline model used in the calculations contains the average maintenance associated with system trains.

The ICCDP associated with the SLC System being out of service using the new CT is given by:

$$ICCDP^{(2)} = (CDF_{SLC\text{-}OOS} - CDF_{BASE}) \times CT^{H}_{SLC-OOS} \qquad \text{[Equation 3-3]}$$

Risk significance relative to ΔLERF and ICLERP[(2)] is determined using equations of the same form as noted above for ΔCDF and ICCDP.

The relevant input parameters for the base quantification of this risk analysis are summarized in Table 3.2-1. The corresponding base risk metric results for this risk analysis (based on quantification of the LS06C model and use of the above equations) are provided in Table 3.2-2.

Table 3.2-1

RISK ASSESSMENT INPUT PARAMETERS

Input Parameter	Value	Reference
CDF_{BASE}	4.0E-06/yr	LS06C U-2 PRA [Ref. 4]
$LERF_{BASE}$	3.0E-07/yr	LS06C U-2 PRA [Ref. 4]
$CT_{SLC\text{-}OOS}$	8.2E-03	One 72-hr TS 3.1.7 Condition B entry assumed per year (i.e., 72 hr/8760 hrs).

(2) ICCDP and ICLERP are probabilities, i.e., no units.

Table 3.2-2

RISK ASSESSMENT BASE RESULTS

Risk Metric	Value	Acceptance Guidelines
$CDF_{SLC\text{-}OOS}$	8.3E-6/yr	N/A
CDF_{NEW}	4.0E-6/yr	N/A
ΔCDF	3.6E-08/yr	<1.0E-06/yr
ICCDP	3.6E-08	<5.0E-07
$LERF_{SLC\text{-}OOS}$	1.8E-6/yr	N/A
$LERF_{NEW}$	3.1E-7/yr	N/A
ΔLERF	1.2E-08/yr	<1.0E-07/yr
ICLERP	1.2E-08	<5.0E-08

3.3 RESULTS COMPARISON TO ACCEPTANCE GUIDELINES

As can be seen from Table 3.2-2, the base results of the risk assessment indicate that the ΔCDF, ICCDP, ΔLERF, and ICLERP risk metric values are below the acceptance guidelines as defined in RG 1.174 and RG 1.177. In addition quantitative sensitivity cases for model uncertainties are provided in Appendix B.

This analysis demonstrates that the proposed TS change satisfies the risk acceptance guidelines in RG 1.174 and RG 1.177, and therefore meets the intent of very small risk increases consistent with the Commission's Safety Goal Policy Statement.

A sensitivity analysis was performed to determine the maximum allowable CT before exceeding the acceptance criteria for very small risk increases. For this sensitivity, ICCDP and ICLERP were set to their maximum allowable values in RG 1.177, and the CT_{NEW} allowable was calculated. ICLERP was determined to be the bounding parameter, and a CT_{NEW} of 295 hours was calculated. This represents a significant margin compared to the proposed 72 hour CT.

3.4 EXTERNAL EVENTS

A qualitative assessment of external event risks is provided. Further details are found in Appendix A.

3.4.1 Internal Fires

The impact on the internal fires risk profile due to the proposed CT is evaluated using the following information sources:

- LaSalle RMIEP study [Ref. 11]
- NUREG/CR-6850 [Ref. 18]
- LaSalle Interim FPRA [Ref. 10]
- BWROG Assessment of Fire-Induced Failure to Scram [Ref. 19]

The internal fires risk impact assessment is discussed in Appendix A.4. The assessment concluded that fire hazards can be appropriately screened as non-significant contributors to the risk assessment of the proposed CT because of the low frequency of a fire coupled with a failure to scram.

3.4.2 Seismic

ECG does not currently maintain a seismic PRA for LaSalle. The impact on the seismic risk profile due to the proposed CT is evaluated using the following information sources:

- LaSalle RMIEP study [Ref. 11]
- NUREG-1150 [Ref. 23]

The seismic risk impact assessment is discussed in Appendix A.3. The assessment concluded that seismic risk can be appropriately screened as a non-significant contributor to the risk assessment of the proposed CT.

3.4.3 Other External Hazards

Other external event risks such as external floods, severe weather, high winds or tornados, transportation accidents, nearby facility accidents, turbine missiles, and other miscellaneous external hazards were also considered in the IPEEE analysis. The LaSalle site characteristics and design meet all the applicable criteria of the NRC Standard Review Plan (SRP). No significant quantitative contribution from these external events was identified by IPEEE evaluations (refer to Appendix A.2).

As such, other external hazards are appropriately screened as non-significant contributors to the risk assessment of the proposed CT.

3.5 UNCERTAINTY ASSESSMENT

3.5.1 Parametric Uncertainty

Consistent with the ASME PRA Standard, quantitative parametric uncertainty analyses for both CDF and LERF are evaluated to determine if the point estimates calculated by the PRA model appropriately represent the mean. The results of these analyses are summarized in Appendix B.2.

The parametric uncertainty analysis shown in Appendix B.2 supports the use of the point estimate to represent the mean for the calculation of the changes in the risk metrics for the extended CT.

3.5.2 Modeling Uncertainty

An assessment of modeling uncertainty is documented in Sections B.1 and B.2. The results of these modeling uncertainty assessments judged not to change the conclusions of this risk assessment for the proposed SLC CT change as they do not directly impact the SLC system or ATWS scenarios.

- Section B.1 provides the LaSalle specific modeling uncertainty evaluations for the Base Case.

- Section B.2 provides an examination of the specific cutsets that affect the change in the CDF risk metric associated with the change in the SLC CT.

The results of these modeling uncertainty assessments do not change the conclusions of this risk assessment for the proposed SLC CT change.

3.6 RISK SUMMARY

As discussed above and as summarized in Table 3.6-1, the FPIE quantitative evaluation results are well below the risk acceptance guidelines of RG 1.174 and RG 1.177. External events evaluations are discussed in Appendix A and do not change the results or conclusions of this risk assessment. As such, this risk evaluation demonstrates that the proposed TS change can be made with a very small risk increase.

Table 3.6-1

RISK ASSESSMENT SUMMARY RESULTS

Hazard	ΔCDF	ICCDP	ΔLERF	ICLERP
FPIE	3.6E-08/yr	3.6E-08	1.2E-08/yr	1.2E-08
Acceptance Criteria	<1.0E-06/yr	<5.0E-07	<1.0E-07/yr	<5.0E-08
Fire	(1)	(1)	(1)	(1)
Seismic	(1)	(1)	(1)	(1)

(1) Evaluated and determined not to change the conclusions of the FPIE risk analysis.

4.0 TECHNICAL ADEQUACY OF PRA MODEL

The 2006C update to the LaSalle Unit 2 PRA model (LS06C) is the most recent evaluation of the risk profile at LaSalle for FPIE challenges. The LaSalle PRA modeling is highly detailed, including a wide variety of initiating events, modeled systems, operator actions, and common cause events. The PRA model quantification process used for the LaSalle PRA is based on the event tree / fault tree methodology, which is a well-known methodology in the industry.

EGC employs a multi-faceted approach to establishing and maintaining the technical adequacy and plant fidelity of the PRA models for all operating EGC nuclear generation sites. This approach includes both a proceduralized PRA maintenance and update process, and the use of self-assessments and independent peer reviews. The following information describes this approach as it applies to the LaSalle PRA.

4.1 PRA QUALITY OVERVIEW

The quality of the LaSalle FPIE PRA is important in making risk-informed decisions. The importance of the PRA quality derives from NRC Policy Statements as implemented by RGs 1.174 and 1.177, rule making and oversight processes. These can be briefly summarized as follows using the words of the NRC Policy Statement (1995):

1. *"The use of PRA technology should be increased in all regulatory matters to the extent supported by the state-of-the-art…and supports the NRC's traditional defense-in-depth philosophy."*

2. *"PRA…should be used in regulatory matters…to reduce unnecessary conservatism…"*

3. *"PRA evaluations in support of regulatory decisions should be…realistic…and appropriate supporting data should be publicly available for reviews."*

4. *"The Commission's safety goals…and subsidiary numerical objectives are to be used with appropriate consideration of uncertainties in making regulatory judgments…"*

5. *"Implementation of the [PRA] policy statement will improve the regulatory process in three ways:*

- *Foremost, through safety decision making enhanced by the use of PRA insights;*
- *Through more efficient use of agency resources; and*
- *Through a reduction in unnecessary burdens on licensees."*

PRA quality is an essential aspect of risk-informed regulatory decision making. In this context, PRA quality can be interpreted to have five essential elements:

- Scope (Section 4.2): The scope (i.e., completeness) of the FPIE PRA. The scope is interpreted to address the following aspects:
  - Challenges to plant operation (Initiating Events):
    - Internal Events (including Internal Floods)
    - External Hazards
    - Fires
  - Plant Operational states:
    - Full Power
    - Low Power
    - Shutdown
  - The metrics used in the quantification:
    - Level 1 PRA – CDF
    - Level 2 PRA – LERF
    - Level 3 PRA – Health Effects
- Fidelity (Section 4.3): The fidelity of the PRA to the as-built, as-operated plant.
- Standards (Section 4.4): ASME PRA Standard [Ref. 5] as endorsed by the NRC in Regulatory Guide 1.200 [Ref. 1].
- Peer Review (Section 4.5): An independent PRA peer review provides a method to examine the PRA process by a group of experts. In some cases, a PRA self-assessment using the available PRA Standards endorsed by the NRC can be used to replace or supplement this peer review.
- Appropriate Quality (Section 4.6): The quality of the PRA needs to be commensurate with its application. In other words, the needed quality is defined by the application requirements.

4.2 SCOPE

The LaSalle PRA is a full power, internal events (FPIE) PRA that addresses both CDF and Large LERF. The quantitative insights from the FPIE PRA are directly applicable to the SLC CT Extension PRA application. This scope is judged to be adequate to support the SLC CT PRA application.

Because not all PRA standards are available to define the appropriate elements of PRA quality for all applications, the NRC has adopted a phased implementation approach. This phased approach uses available PRA tools and their quantitative results where standards are available and endorsed by the NRC. Where standards are not yet available or endorsed, this approach uses qualitative insights or bounding approaches as needed.

The quality assessment performed in this section confirms the adequacy of the FPIE PRA. This assessment does not address the risk implications associated with low power or shutdown operation or with external events (including fire).

4.3 FIDELITY: PRA MAINTENANCE AND UPDATE

The EGC risk management process for maintaining and updating the PRA ensures that the PRA model remains an accurate reflection of the as-built and as-operated plants. This process is defined in the EGC Risk Management program, which consists of a governing procedure (ER-AA-600, "Risk Management") and subordinate implementation procedures. EGC procedure ER-AA-600-1015, "FPIE PRA Model Update" delineates the responsibilities and guidelines for updating the full power internal events PRA models at all operating EGC nuclear generation sites. The overall EGC Risk Management program, including ER-AA-600-1015, defines the process for implementing regularly scheduled and interim PRA model updates, for tracking issues identified as potentially affecting the PRA models (e.g., due to changes in the plant, errors or limitations identified in the model, industry operating experience), and for controlling the model and associated computer files. To ensure that the current PRA model remains an accurate reflection of the as-built, as-operated plants, the following activities are routinely performed:

- Design changes and procedure changes are reviewed for their impact on the PRA model.
- New engineering calculations and revisions to existing calculations are reviewed for their impact on the PRA model.
- Maintenance unavailabilities are captured, and their impact on CDF is trended.
- Plant specific initiating event frequencies, failure rates, and maintenance unavailabilities are updated approximately every four years.

In addition to these activities, EGC risk management procedures provide the guidance for particular risk management and PRA quality and maintenance activities. This guidance includes:

- Documentation of the PRA model, PRA products, and bases documents.
- The approach for controlling electronic storage of Risk Management (RM) products including PRA update information, PRA models, and PRA applications.
- Guidelines for updating the full power, internal events PRA models for EGC nuclear generation sites.
- Guidance for use of quantitative and qualitative risk models in support of the On-Line Work Control Process Program for risk evaluations for maintenance tasks (corrective maintenance, preventive maintenance, minor maintenance, surveillance tests and modifications) on systems, structures, and components (SSCs) within the scope of the Maintenance Rule (10CFR50.65 (a)(4)).

In accordance with this guidance, regularly scheduled PRA model updates nominally occur on a four year cycle; shorter intervals may be required if plant changes, procedure enhancements, or model changes result in significant risk metric changes.

4.4 STANDARDS

The ASME PRA Standard [Ref. 5] provides the basis for assessing the adequacy of the LaSalle PRA as endorsed by the NRC in RG 1.200, Rev 1 [Ref. 1]. The predecessor to the ASME PRA Standard was NEI 00-02 which identified the critical internal events PRA elements and their attributes necessary for a quality PRA.

4.5 PEER REVIEW AND PRA SELF-ASSESSMENT

There are three principal ways of incorporating the necessary quality into the PRA in addition to the maintenance and update process. These are the following:

- A thorough and detailed investigation of open issues and the implementation of their resolution in the PRA. Table 4-1 includes the continuing investigations by EGC of plant modifications and changes that could influence the risk spectrum.
- A PRA Peer Review to allow independent reviewers from outside to examine the model and documentation. The ASME PRA Standard [Ref. 5] specifies that a PRA Peer Review be performed on the PRA.
- The use of the ASME PRA Standard to define the criteria to be used in establishing the quality of individual PRA elements.

Several assessments of technical capability have been made and continue to be planned for the LaSalle PRA model. A chronological list of the assessments performed includes the following:

- An independent PRA peer review was conducted under the auspices of the BWR Owners' Group in July 2000, following the Industry PRA Peer Review process. [Ref. 6] This peer review included an assessment of the PRA model maintenance and update process.
- During 2005 and 2006, the LaSalle PRA model results were evaluated in the BWR Owners' Group PRA cross-comparisons study performed in support of implementation of the mitigating systems performance indicator (MSPI) process. No significant issues resulted from this comparison.
- A summary of the disposition of the BWROG PRA Peer Review facts and observations (F&Os) for the LaSalle PRA model was documented as part of the statement of PRA capability for MSPI in the LaSalle MSPI Basis Document [Ref. 7]. As noted in that document, there were no significance level A F&Os from the 2000 peer review, and all significance level B F&Os were addressed and closed out with the completion of the current model of record in 2006.
- In 2006, a self-assessment analysis was performed using Addenda B of the ASME PRA Standard [Ref. 5] and RG 1.200, Rev. 1 [Ref. 1] in preparation of the LaSalle 2006 periodic update of the PRA. [Ref. 28].
- A PRA Peer Review [Ref. 8] of the LaSalle PRA was performed during April 2008 against ASME RA-Sb-2005. The results of the PRA Peer Review indicated that only a small number of the supporting requirements (SRs) were "Not Met", 20 of a total of 313. This included 8 related to uncertainty SRs that have since been resolved by implementation of a response based on NUREG-1855. The SRs identified from the peer review as not meeting Capability Category II are summarized in Table 4-2 along with an assessment of the impact for this application.

4.5.1 PRA Peer Review Overview

As noted above, the LaSalle PRA has been subjected to two separate PRA Peer Reviews (2000 and 2008). The results of these peer reviews have been fed back into the PRA model and documentation. Open items from the reviews that could affect the SLC CT are summarized in Table 4-2 (Supporting Requirements) and Table 4-3 (Findings).

4.5.2 Self-Assessment Overview

A Self-Assessment (Gap Analysis) of the LaSalle PRA model was completed in 2006. This "gap analysis" was performed using the ASME PRA Standard (ASME RA-Sb-2005) [Ref. 5] and RG 1.200, Rev. 1 [Ref. 1]. This self-assessment was performed to support planning of the LaSalle 2006 periodic update of the PRA. Potential gaps to Capability Category II of the ASME PRA Standard were identified. PRA updating requirements evaluation (URE) entries were logged into the EGC model update tracking database to track the gaps for resolutions. All identified gaps were addressed in the 2006 PRA update except for two minor items maintained for future consideration (one item is a documentation enhancement to the PRA System Notebooks and the other item is a suggested enhancement to the DW pneumatics fault tree logic).

PRA input can be used in applications despite the fact that the PRA does not meet all of ASME PRA Standard Supporting Requirements. This is well recognized by the NRC and is explicitly stated in the ASME PRA Standard and RG 1.174. RG 1.174 states the following in Section 2.2.6:

> *There are, however, some applications that, because of the nature of the proposed change, have a limited impact on risk, and this is reflected in the impact on the elements of the risk model.*

The proposed SLC CT Extension PRA application may not require more than Capability Category I for some SRs. It is also acknowledged that for PRAs with SRs ranked as "Not Met," the PRA may be used for PRA applications but may require additional justification and support to allow their use. Finally, it is judged that no PRA has Capability Category III for all of its SRs, nor is this currently expected as part of the NRC PRA Quality Program.

4.6 APPROPRIATE PRA QUALITY

The PRA is used within its limitations to augment the deterministic criteria for plant operation. This is confirmed by the PRA Peer Review and the PRA Self-Assessment. As indicated previously, RG 1.200 also requires that additional information be provided as part of the License Amendment Request (LAR) submittal to demonstrate the technical adequacy of the PRA model used for the risk assessment. Each of these items (plant changes not yet incorporated in to the PRA model, consistency with applicable PRA Standards, relevant peer review findings, and the identification of key assumptions) is discussed below.

4.6.1 Plant Changes Not Yet Incorporated into the PRA Model

A PRA updating requirements evaluation (URE) is EGC's PRA model update tracking database). These UREs are created for all issues that are identified with a potential to impact the PRA model. The URE database includes the identification of those plant changes that could impact the PRA model. A review of the current open items in the URE database associated with plant changes for LaSalle as well as items related to SLC or ATWS modeling is summarized in Table 4-1 along with an assessment of the impact for this application.

The results of the assessment documented in Table 4-1 show that none of the plant changes have any measurable impact on the SLC CT extension request.

4.6.2 Consistency with Applicable PRA Standards

This subsection addresses the following:

- PRA Peer Review Supporting Requirements not meeting Capability Category II.
- PRA Peer Review Findings

As indicated above, a formal PRA peer review using the ASME PRA Standard (ASME RA-Sb-2005) was performed in April 2008 and the final peer review report issued in July 2008 [Ref. 8]. The SRs identified from the peer review as not meeting Capability Category II are summarized in Table 4-2 along with an assessment of the impact for this application.

The self-assessment provides the connection between the PRA and the ASME PRA Standard by also considering the PRA Peer Review comments.

The results of the 2008 LaSalle PRA Peer Review are also used to identify the relevant peer review findings regarding the PRA model that would influence the assessment of the risk metrics for the SLC CT extension application. The Findings from the 2008 peer review are summarized in Table 4-3 along with an assessment of the impact for this application.

In summary, none of the plant changes, the open SRs indentified from the peer review, or the 2008 Peer Review findings have a measurable impact on the SLC CT extension request.

Table 4-1

IMPACT OF PLANT CHANGES SINCE THE LAST UPDATE OF THE LASALLE PRA MODEL

URE Number	Plant change	Impact on the LS PRA	Impact on the Application
LS2008-0001	LOA-FP-101/201, Revision 8, was revised and now includes an Attachment C. Attachment C contains a listing of all manual operator actions that are credited during fire scenarios. This list of manual operator actions contains insightful information regarding use of ECCS system based on a spatial relationship, rather than a "divisional" relationship. These actions should be reviewed during the next internal events PRA update and definitely during the fire PRA update for enhancements to the HRA. No immediate action required.	Impact on internal events PRA likely non-significant. These actions are all fire related and do not affect the FPIE model.	These actions are related to ECCS credit, and have a non-significant impact on ATWS scenarios. Further discussion of fire-induced ATWS and random scram coupled with a fire challenge are discussed in Appendix A.
LS2008-0002	During review of Revision 7 of LOA-RP-101/201 it was noted that the automatic scram based on the OPRMs is now enabled. This does not impact the PRA model because modeling of RPS is generic in nature. However, the RPS System Notebook should be updated to reflect this change. This is only a documentation issue.	Documentation issue.	No Impact

Table 4-1

IMPACT OF PLANT CHANGES SINCE THE LAST UPDATE OF THE LASALLE PRA MODEL

URE Number	Plant change	Impact on the LS PRA	Impact on the Application
LS2008-0003	LPGP-PSTG-01S14, Plant Specific Technical Guidelines - Section 14 LGA Related Hard Cards, Revision 2, add several new hard cards including: • Anticipate ADS • Inhibit ADS and ECCS Prevent Injection • Override ECCS not needed for RPV Injection • Trip Recirc Pumps • Verify DG and ECCS Starts • Open SRVs to Control Reactor Pressure Additionally, the hard card for Preventing ECCS injection now permits closing the RHR injection valves rather than just putting the RHR pumps in Pull to Lock. This will allow suppression pool cooling to operate, while in an ATWS condition. These changes should be reviewed for impact on the HRA.	A typical aspect of PRA updates to consider new procedural changes; these have no obvious significant impact on the risk profile. These hard cards would have a non-significant impact on associated HEPs in the model. Some of the HEPs are driven by short time window diagnosis error (not execution errors); other HEPs are simple execution actions which these hard cards would not significantly impact the overall HEP.	No Impact
LS2008-0004	There are new steps for securing large turbine building floods in Revision 19 of LOA-FLD-001. Additionally, there are new steps for securing the reactor building ventilation (VR) check dampers that may cause them to be more leak tight and potentially credit them in the PRA model again.	No significant impact on risk profile. The VR check dampers are not flood barriers and physically cannot stop flood progression. Physically securing closed the VR check dampers may slow flood progression between the RB and TB but will not stop flood propagation.	No Impact

Table 4-1

IMPACT OF PLANT CHANGES SINCE THE LAST UPDATE OF THE LASALLE PRA MODEL

URE Number	Plant change	Impact on the LS PRA	Impact on the Application
LS2008-0005	There are new steps (i.e. operator actions) for using the fire protection hose system to mitigate a release of fission products in Revision 2 of LOA-FP-001. This is a commitment to B.5.b. This should be reviewed further to determine what credit, if any, could be taken in the PRA for these new actions.	No significant impact on LERF sequences. Minimal (if any) operator action credit for such an action would be taken in the PRA given the hazardous environment.	No Impact
LS2009-0001	It noted during the review of this procedure change, that the steps have been re-ordered to focus on RPV level/pressure control. This likely has a small impact on the PRA. However, this procedure revision paperwork also contains walkdown implementation and timing notes that may be useful for the next PRA update or Fire PRA development.	Changes in timing notes could affect HEP values associated with RPV level and pressure control	RPV level and pressure control HEPs are minor contributors to the ATWS scenarios affected by this application. Minimal impact.
LS2009-0007	During the 2nd quarter 2009 procedure review, it was identified that LOA-EH-101/201 has been revised. This revision includes new instructions for coping with a stuck open turbine bypass valve. Additionally, the setpoint for the MSIV closure signal based on main steam line low pressure has been revised from 866 psig to 854 psig. This new setpoint needs to be updated in the MS-MC PRA system notebook, Table 2-3.	Changes in procedures may change HRA values associated with TBVs.	TBV HEPs are not contributors to this application. No impact.

Table 4-1

IMPACT OF PLANT CHANGES SINCE THE LAST UPDATE OF THE LASALLE PRA MODEL

URE Number	Plant change	Impact on the LS PRA	Impact on the Application
LS2009-0008	During the 2nd quarter 2009 procedure review, it was identified that LOP-SA-01, Revision 12 may include changes that could impact the PRA. Specifically, this procedure change incorporates three ECs (344407, 344408, and 344409). These ECs changed the power supply for the control power. This will impact the documentation in the PRA system notebook. Additionally, during the next PRA update, the system operation and dependencies should re-reviewed for possible impact to the model.	Minor changes anticipated to Modeling of Station Air Compressors.	Failure of the station air compressor as a support system would not impact the ATWS scenarios affected by this application. Impacts on the initiating event frequency may increase overall CDF and LERF, but would not impact the risk insights already determined by this analysis.
LS2009-0009	During the 1st quarter 2009 procedure review, it was noted that the minimum steam cooling reactor water level (MSCRWL) has changed from -185 to -183 due to the use of ATRIUM fuel in this fuel cycle. LGA-001 and LGA-010 have been revised to reflect this change.	Timings derived from MAAP calculations would not significantly change based on this correction. HRA values will likely remain unchanged.	HEPs are not modified by this change. No impact.
LS2009-0010	The RMCS modification is a major change to the rod control system and how rod movements are controlled and monitored. Although this modification does not directly impact the PRA, the impact to operator actions and reactivity control during ATWS should be reviewed at the next periodic update.	Potentially alters HEPs associated with ATWS scenarios.	RMCS is not a factor in assessing the ATWS failure contributors.

Table 4-1

IMPACT OF PLANT CHANGES SINCE THE LAST UPDATE OF THE LASALLE PRA MODEL

URE Number	Plant change	Impact on the LS PRA	Impact on the Application
LS2009-0014	In reviewing operator actions and associated documentation, it was discovered that basic event 2MSOP-AT-LVL-H-- needs clarification. HRA NB, section 3.33 states that 2MSOP-AT-LVL-H-- is the probability that level is required to be lowered to below the level 1 setpoint during an ATWS. If this is the case, this is not really an operator action. However, per discussions with Vince Andersen, this is the success (not failure) that the operator lowers level below level 1. If this were true I would expect the probability to be (1-failure probability) or 0.885.	Likely only a documentation issue. However, modeling should also be reviewed.	This guaranteed failure appears in many high value cutsets associated with this application. This modeled event is appropriately included in the model. A lower HEP would decrease the associated risk metrics, making this analysis conservative in nature.
LS2009-0021	Per drawings 1E-2-4000LD and 1E-2-4000LJ, the power supplies for the SBLC squib injection valves (2C41-F004A and 2C41-F004B) are 235X-1 and 236X-2, respectively; not 235Y-1 and 236Y-2 as modeled under gates SLC-EOV-A and SLC-EOV-B. This was also verified by the data in Passport.	This modeling issue addresses very specific dependencies. Given the symmetries in the model, CDF and LERF will likely not change numerically, but the cutsets associated with this issue will be changed.	SLC is already assumed out of service for this application. Any increased dependencies associated with SLC would not impact the risk metrics evaluated.
LS2009-0024	During development of the Summer 2009 revision to the LS MSPI Bases document to revise the MSPI EDG mission time to 6 hrs it was discovered that the EDG fuel oil transfer pumps are not explicitly modeled in the PRA fault tree logic.	Based on review of the fuel oil pump importance in the Clinton PRA, it is estimated here that the impact to the LS CDF would be an increase of approximately 5%.	Fuel oil pumps have no impact on ATWS scenarios such as those examined for this application.

Table 4-1

IMPACT OF PLANT CHANGES SINCE THE LAST UPDATE OF THE LASALLE PRA MODEL

URE Number	Plant change	Impact on the LS PRA	Impact on the Application
LS2009-0028	Revisions 14 and 12 were issued to LOA-DC-101 and LOA-DC-201 respectively. These revisions involve revising the instructions for a loss of DC Bus 111Y/211Y to ensure that the CW system and main condenser remain available as a heat sink in response to the transient.	Any changes to the model would be expected to be a very small decrease in CDF.	Loss of DC scenarios are negligible contributors to this application.
LS2009-0029	Revisions 17 and 19 to LOA-FX-101 and LOA-FX-201 respectively could potentially impact the LaSalle Fire PRA. The procedure changes revise operator actions in response to a fire in the control room or AEER. Review for impact on the HRA.	Changes to the PRA are expected to be minimal. However, there may be some efficiencies in the operator actions.	Fire scenarios are negligible contributors to the application. See Appendix A.
LS2009-0030	Revisions 12 and 10 to LOA-RH-101 and LOA-RH-201 respectively could potentially impact the LaSalle PRA. These procedure revision involve changes to instructions for SDC and recovering from a loss of SDC.	Minor impact on SDC modeling.	ATWS scenarios are not impacted by loss of SDC.
LS2009-0032	C353390 will add an auto-start feature to the Service Water System. The modification will add a new selector switch to the control room control board, which will allow the operators to choose which service water pump they want to auto-start in the event no service water pumps are running (i.e., standby pump). If a pump is in standby and an event occurs that trips all the running pumps AND an undervoltage condition does not exist, the pump in standby will automatically start. This modification also adds a pull to lock position to the service water pump control switches.	This new modification will potentially decrease the initiating event frequency of the loss of service water event. This modification will also impact operator actions taken due to a service water flooding scenario (i.e., tripping all service water pumps). However, the overall impact on CDF and LERF due to this modification is expected to be small.	Loss of Service Water and Service Water floods are negligible contributors to ATWS scenarios.

Table 4-2

LASALLE PRA 2008 PEER REVIEW
IMPACT OF PRA STANDARD SUPPORTING REQUIREMENTS (SRs)
NOT AT LEAST CAPABILITY CATEGORY II (CCII)

SR ID	SR Description	Capability Category	Impact on the Application
IE-A7	REVIEW plant-specific operating experience for initiating event precursors, for the purpose of identifying additional initiating events.	SR Met Capability Category I.	Documentation issue. No impact. No additional IE categories would be identified. Peer reviewers desired greater discussion/documentation of IE precursors.
IE-D3	DOCUMENT the key assumptions and key sources uncertainty with the initiating event analysis.	SR Not Met.	Refer to the impact discussion for SR QU-E4.
AS-C3	DOCUMENT the key assumptions and key sources of uncertainty associated with the accident sequence analysis.	SR Not Met.	Refer to the impact discussion for SR QU-E4.
SC-B5	CHECK the reasonableness and acceptability of the results of the thermal/hydraulic, structural, or other supporting engineering bases used to support the success criteria. Examples of methods to achieve this include: (a) comparison with results of the same analyses performed for similar plants, accounting for differences in unique plant features (b) comparison with results of similar analyses performed with other plant specific codes (c) check by other means appropriate to the particular analysis	SR Not Met.	Documentation issue. No impact to this application. The LaSalle PRA Success Criteria Notebook compares MAAP and MELCOR runs. The peer review team desired more comparisons with other plants and other codes.
SC-C3	DOCUMENT the key assumptions and key sources of uncertainty associated with the development of success criteria.	SR Not Met.	Refer to the impact discussion for SR QU-E4.

Table 4-2

LASALLE PRA 2008 PEER REVIEW
IMPACT OF PRA STANDARD SUPPORTING REQUIREMENTS (SRs)
NOT AT LEAST CAPABILITY CATEGORY II (CCII)

SR ID	SR Description	Capability Category	Impact on the Application
SY-A4	CONFIRM that the system analysis correctly reflects the as-built, as-operated plant through discussions with system engineers and plant operations staff.	SR Met (CC I)	Documentation issue. No impact to this application. The majority of the LaSalle PRA System Notebooks include documented Operator Interviews and walkdowns. The peer review team desired that every System Notebook include such documentation and that walkdowns be performed with both Operations and Systems personnel on the walkdown. For this application, the modeling of the SLC system reflects the as-built, as-operated plant.
SY-C3	DOCUMENT the key assumptions and key sources uncertainty associated with the systems analysis.	SR Not Met.	Refer to the impact discussion for SR QU-E4.
HR-A1	For equipment modeled in the PRA, IDENTIFY, through a review of procedures and practices, those test and maintenance activities that require realignment of equipment outside its normal operational or standby status.	SR Not Met.	Documentation issue. No impact on this application. Peer review team did not identify any expected pre-initiator HEPs missing from the models, and they stated that they believed the review was done but they desired to see greater documentation.
HR-A2	IDENTIFY, through a review of procedures and practices, those calibration activities that if performed incorrectly can have an adverse impact on the automatic initiation of standby safety equipment.	SR Not Met.	Refer to impact discussion for SR HR-A1.
HR-B1	ESTABLISH rules for screening classes of activities from further consideration.	SR Met (CC I)	Refer to impact discussion for SR HR-A1.

Table 4-2

LASALLE PRA 2008 PEER REVIEW
IMPACT OF PRA STANDARD SUPPORTING REQUIREMENTS (SRs)
NOT AT LEAST CAPABILITY CATEGORY II (CCII)

SR ID	SR Description	Capability Category	Impact on the Application
HR-G6	CHECK the consistency of the post-initiator HEP quantifications. REVIEW the HFEs and their final HEPs relative to each other to check their reasonableness given the scenario context, plant history, procedures, operational practices, and experience.	SR Not Met	Documentation issue. No impact on this application. The Exelon HRA best practices direct performance of a reasonableness check, and this was performed for the LaSalle PRA. Peer Review team desired to see a detailed discussion of the reasonableness check.
HR-I3	DOCUMENT the key assumptions and key sources uncertainty associated with the human reliability analysis.	SR Not Met.	Refer to impact discussion for SR QU-E4.
DA-C8	ESTIMATE the time that components were configured in their standby status.	SR Met (CC I).	Non-significant impact on this application. The LaSalle PRA uses primarily plant-specific information for configuration probabilities. Peer Review teams desired that all configuration probabilities used in the PRA be based on plant-specific data. SLC is a standby system that is always in a standby status. This is properly reflected in the PRA.
DA-C10	REVIEW the test procedure to determine whether a test should be credited for each possible failure mode. COUNT only completed tests or unplanned operational demands as success for component operation.	SR Met (CC I).	Non-significant impact on this application. The PRA data work is based on MSPI and Maintenance Rule (MR) data. Any changes to plant-specific failure rates from a revised rigorous accounting of test procedures vs. MR and MSPI data is expected to be non-significant.
DA-E3	DOCUMENT the key assumptions and key sources of uncertainty associated with the data analysis.	SR Not Met.	Refer to impact discussion for SR QU-E4.

Table 4-2

LASALLE PRA 2008 PEER REVIEW
IMPACT OF PRA STANDARD SUPPORTING REQUIREMENTS (SRs)
NOT AT LEAST CAPABILITY CATEGORY II (CCII)

SR ID	SR Description	Capability Category	Impact on the Application
IF-C3b	IDENTIFY inter-area propagation through the normal flow path from one area to another via drain lines; and areas connected via back flow through drain lines involving failed check valves, pipe and cable penetrations (including cable trays), doors, stairwells, hatchways, and HVAC ducts. INCLUDE potential for structural failure (e.g., of doors or walls) due to flooding loads.	SR Met (CC I).	Documentation issue. No impact on this application. Flood barrier unavailability is considered and included in the internal flood analysis. Peer review team desired to see more extensive discussions on this topic; however, the team expected any resulting changes to the model results would be non-significant.
IF-F3	DOCUMENT the key assumptions and key sources of uncertainty associated with the internal flooding analysis.	SR Not Met.	Refer to impact discussion for SR QU-E4.
QU-D1a	REVIEW a sample of the significant accident sequences/cutsets sufficient to determine that the logic of the cutset or sequence is correct.	SR Not Met.	Documentation issue. No impact on this application. Cutset review is performed as part of the PRA update quantification and documentation process. Peer review teams desired to see greater documentation of such a review.
QU-D4	REVIEW a sampling of non-significant accident cutsets or sequences to determine they are reasonable and have physical meaning.	SR Not Met.	Documentation issue. No impact on this application. Cutset review is performed as part of the PRA update quantification and documentation process. Peer review teams desired to see greater documentation of such a review.
QU-E2	IDENTIFY key assumptions made in the development of the PRA model.	SR Not Met.	Refer to impact discussion for SR QU-E4.

Table 4-2

LASALLE PRA 2008 PEER REVIEW
IMPACT OF PRA STANDARD SUPPORTING REQUIREMENTS (SRs)
NOT AT LEAST CAPABILITY CATEGORY II (CCII)

SR ID	SR Description	Capability Category	Impact on the Application
QU-E4	PROVIDE an assessment of the impact of the key model uncertainties on the results of the PRA.	SR Not Met.	The LaSalle PRA Summary Notebook provides an extensive discussion of both parametric and modeling uncertainty and sensitivity studies for the base PRA. The peer review team desired to see greater discussions of sources of uncertainty. The uncertainty and sensitivity discussions in the base PRA and those performed for this application fulfill these PRA quality expectations.
QU-F3	DOCUMENT the significant contributors (such as initiating events, accident sequences, basic events) to CDF in the PRA results summary	SR Met (CC I).	Documentation issue. No impact on this application. Such information is documented in the PRA Quantification Notebook. Peer review team desired to see more detailed documentation.
QU-F4	DOCUMENT key assumptions and key sources of uncertainty, such as: possible optimistic or conservative success criteria, suitability of the reliability data, possible modeling uncertainties (modeling limitations due to the method selected), degree of completeness in the selection of initiating events, possible spatial dependencies, etc.	SR Not Met.	Refer to impact discussion for SR QU-E4.
QU-F6	DOCUMENT the quantitative definition used for significant basic event, significant cutset, significant accident sequence. If other than the definition used in Section 2, JUSTIFY the alternative.	SR Not Met.	Documentation issue. No impact.

Table 4-2

LASALLE PRA 2008 PEER REVIEW
IMPACT OF PRA STANDARD SUPPORTING REQUIREMENTS (SRs)
NOT AT LEAST CAPABILITY CATEGORY II (CCII)

SR ID	SR Description	Capability Category	Impact on the Application
LE-F3	IDENTIFY contributors to LERF and characterize LERF uncertainties consistent with the applicable requirements of Tables 4.5.8-2(d) and 4.5.8-2(e). NOTE: The supporting requirements in these tables are written in CDF language. Under this requirement, the applicable requirements of Table 4.5.8 should be interpreted based on LERF, including characterizing key modeling uncertainties associated with the applicable contributors from Table 4.5.9-3. For example, supporting requirement QUD5 addresses the significant contributors to CDF. Under this requirement, the contributors would be identified based on their contribution to LERF.	SR Not Met.	Refer to impact discussion for SR QU-E4.
LE-G4	DOCUMENT key assumptions and key sources of uncertainty associated with the LERF analysis, including results and important insights from sensitivity studies.	SR Not Met.	Refer to impact discussion for SR QU-E4.
LE-G6	DOCUMENT the quantitative definition used for significant accident than the definition used in Section 2, JUSTIFY the alternative.	SR Not Met.	Documentation issue. No impact.

Table 4-3

IMPACT OF OPEN SIGNIFICANT PRA PEER REVIEW FINDINGS FOR THE LASALLE PRA MODEL

"Finding" F&O	Issue Description	Impact on the Application
IE-C7-01	The support system initiating event (IE) fault trees includes modifications as necessary to calculate a frequency rather than a probability. However, it is noted that the fail to run (FTR) treatment in the IE fault trees is different than in the corresponding mitigation fault trees. These should be consistent as either the FTR common cause failure (CCF) mode is applicable in both versions of the fault tree or in neither version of the fault tree. Part of the reason for excluding the FTR CCF events may be related to calculating IE frequencies not consistent with operating experience. This is an indication that the FTR data used in the assessment may be too conservative. More recent generic data (e.g. from NUREG/CR-6928) for closed cooling water systems such as reactor building closed cooling water (RBCCW) and turbine building closed cooling water (TBCCW) is about an order of magnitude lower than that used in the current LaSalle analysis.	Non-significant impact on ATWS sequences or SLC System
IE-D3-01	The Summary Notebook includes information that attempts to identify the key sources of uncertainty in the initiating event analysis. However, with the changes to eliminate "key" from the supporting requirement (SR) definition, this SR cannot be considered met.	Refer to impact discussion in Table 4-2 for SR QU-E4.
AS-A9-01	The use of MAAP to develop short-term timing for HRA calculations in ATWS sequences is not judged appropriate by the review team. The timing should be based on a more realistic analysis. If it is decided to continue to use MAAP for ATWS, explain your rationale for doing so and discuss any limitations of the analysis.	Minimal Impact. Decreased timings for HRA would result in higher HEPs for Short Term SLC. The effects of such changes are already evaluated in Sensitivity Cases performed for the PRA Update. Additionally, SLC is being taken out of service for this application. HRA failures would result in cutsets that would be compressed out of the quantification.

Table 4-3

IMPACT OF OPEN SIGNIFICANT PRA PEER REVIEW FINDINGS FOR THE LASALLE PRA MODEL

"Finding" F&O	Issue Description	Impact on the Application
AS-B2-01	The modeling of Station Blackout assumes that, following recovery of offsite power, sufficient mitigating systems will be available to prevent core damage. The availability of mitigating systems should be explicitly considered in the event tree modeling.	Non-significant impact. The change in the base CDF resulting from such modeling refinement would be <1%.
SC-A6-02	The success criteria notebook discusses ATWS ASME Service Level C pressure requirements based on NEDE 24222. This does not account for safety relief valve (SRV) changes made at the plant. The correct evaluation for the current LaSalle configuration is documented in GE-NE-A1300384-25-01, Rev 1, which requires a greater number of operable SRVs than is currently modeled in the PRA.	Primarily a documentation issue. Non-significant impact on PRA results.
HR-A1-01	This requirement is probably met during the review to determine the pre-initiator HEPs, however, there is no list or documentation showing the procedures. Similarly for HR-A2, the documentation does not provide evidence of the procedures reviewed. It just says procedures were reviewed.	Documentation issue. No impact.
HR-B1-01	There does not appear to be any screening list or discussion except for dependency. The identification process is described in the HRA notebook section 2.3.2 and information located in the system notebooks (general response from utility). This requirement is not met as per the Capability category II requirements of the ASME Standard.	Documentation issue. No impact.
DA-C1-01	Plant specific data is used to calculate unavailability for most plant systems/components in LS-PSA-010, although generic data is used for the diesel generator ventilation (VD) and emergency core cooling system ventilation (VY) systems, which is not permitted per this SR.	Non-significant impact. Unavailabilities in the LaSalle PRA are based on plant-specific data except in the case of two ventilation system fan trains (that are based on engineering judgment).

Table 4-3

IMPACT OF OPEN SIGNIFICANT PRA PEER REVIEW FINDINGS FOR THE LASALLE PRA MODEL

"Finding" F&O	Issue Description	Impact on the Application
DA-C8-01	Basic events used to model the standby status of various plant systems use a mixture of plant-specific operational data and engineering judgment. For the Plant Service Water system and several other systems, standby estimates have been determined from procedures and operating data (see Appendix G of LS-PSA-010). For other components, assumptions are used (e.g., 50% probability of either of two pumps in a system is in standby). So, overall the LaSalle has some Category II attributes and some Category I attributes.	Refer to impact discussion in Table 4-2.
QU-C1-01	Section 5.3 of the LS-PSA-004 notebook discusses the HEP dependency analysis. The model was quantified using 0.1 values for all HEPs to identify dependent HEP combinations. Recovery rules were then developed for each of these combinations. However, for the base model quantification, not all of the events identified in the above process are set to 0.1 prior to application of the recovery rules. (Table 5.2-1 lists the events set to screening values, some of which are 0.01 and 0.005.) As a result it is possible that some of the dependent HEP combinations are truncated out of the master cutset list prior to recovery.	Non-significant impact on ATWS sequences or SLC System
QU-E4-01	The changes to this SR as identified by the NRC via a Federal Register Notice in July of 2007 indicate that for all sources of uncertainty identified in QU-E1 and QU-E2, respectively, IDENTIFY how the PRA model is affected.	Refer to impact discussion in Table 4-2.
QU-F4-01	Documentation for the characterization of the sources of model uncertainty and related assumptions (as identified in QU-E4) was not provided since the most recent requirements for QU-E4 were not met.	Refer to impact discussion in Table 4-2.
LE-F3-01	This requirement is not met since the SR is tied back to items identified in QU-E2 and QU-E4. Since QU-E2 and QU-E4 are not met yet, this SR is also not met.	Refer to impact discussion in Table 4-2.

4.7 GENERAL CONCLUSION REGARDING PRA CAPABILITY

The LaSalle PRA maintenance and update processes and technical capability evaluations provide a robust basis for concluding that the PRA is suitable for use in risk-informed licensing actions, specifically in support of the requested extended CT for the SLC system.

Previously identified gaps to specific requirements in the ASME PRA Standard have been reviewed to determine which gaps might merit application-specific sensitivity studies in the presentation of the application results. No gaps were identified as needing specific sensitivity studies for this SLC CT extension request.

5.0 SUMMARY AND CONCLUSIONS

5.1 SCOPE INVESTIGATED

This analysis evaluates the acceptability, from a risk perspective, of a change to the LaSalle TS for the SLC system to increase the CT from 8 hours to 72 hours when both SLC subsystems (i.e., both trains) are inoperable.

The analysis examines a range of risk contributors as follows:

- The LaSalle Unit 2 Full Power Internal Events (FPIE) PRA model is used to quantitatively address risk impacts.
- The FPIE assessment is judged to adequately capture risk contributors associated with low power plant operation.
- The Interim Fire PRA model and other fire studies (e.g., NUREG/CR-6850) are used to provide qualitative and semi-quantitative insights, determining that fire hazards are negligible contributors.
- Seismic risk contributors are determined to be negligible based on qualitative insights from the LaSalle RMIEP study.
- Other External Event risks were found to be negligible contributors based on the LaSalle RMIEP study and the IPEEE.

5.2 PRA QUALITY

The PRA quality has been assessed and determined to be adequate for this risk application, as follows:

- Scope - The LaSalle PRA modeling is highly detailed, including a wide variety of initiating events, modeled systems, operator actions, and common cause events. The PRA has the necessary scope to appropriately assess the pertinent risk contributors.

- Fidelity – The LaSalle PRA model (LS06C) is the most recent evaluation of the risk profile at LaSalle for FPIE challenges. The PRA reflects the as-built, as-operated plant.

- Standards – The PRA has been reviewed against the ASME PRA Standard the PRA elements are shown to have the necessary attributes to assess risk for this application.

- Peer Review - The PRA has recently received a Peer Review. Based on the Peer Review results, the PRA is found to have the necessary attributes to assess risk for this application.
- Appropriate Quality – The PRA quality is found to be commensurate with that needed to assess risk for this application.

5.3 QUANTITATIVE RESULTS VS. ACCEPTANCE GUIDELINES

As shown in Table 5.3-1 below, the base results of the risk assessment indicate that the ΔCDF, ICCDP, ΔLERF, and ICLERP risk metric values are below the acceptance guidelines as defined in the corresponding risk significance guidelines from RG 1.174 and RG 1.177.

This analysis demonstrates that the proposed TS change satisfies the risk acceptance guidelines in RG 1.174 and RG 1.177, and therefore meets the intent of very small risk increases consistent with the Commission's Safety Goal Policy Statement.

Table 5.3-1

RISK ASSESSMENT BASE RESULTS

Risk Metric	Value	Acceptance Guidelines
ΔCDF	3.6E-08/yr	<1.0E-06/yr
ICCDP	3.6E-08	<5.0E-07
ΔLERF	1.2E-08/yr	<1.0E-07/yr
ICLERP	1.2E-08	<5.0E-08

5.4 CONCLUSIONS

This analysis demonstrates the acceptability, from a risk perspective, of a change to the LaSalle Technical Specification (TS) for the Standby Liquid Control (SLC) system to increase the Completion Time (CT) from 8 hours to 72 hours when both SLC subsystems (i.e., both trains) are inoperable.

This analysis demonstrates that the proposed TS change satisfies the risk acceptance guidelines in RG 1.174 and RG 1.177. This meets the intent of very small risk increases consistent with the Commission's Safety Goal Policy Statement.

Additionally, a PRA technical adequacy evaluation was performed consistent with the requirements of ASME PRA Standard, Addendum B and RG 1.200, Revision 1. This included a process to identify potential sources of model uncertainty and related assumptions associated with this application. This resulted in the identification of issues that could both decrease and increase the calculated risk metrics. None of these identified sources of uncertainty were significant enough to change the conclusions from the risk assessment results presented here.

6.0 REFERENCES

[1] RG 1.200, “An Approach for Determining the Technical Adequacy of Probabilistic Risk Assessment Results for Risk Informed Activities,” Revision 1, January 2007.

[2] RG 1.174, "An Approach for Using Probabilistic Risk Assessment in Risk-Informed Decisions on Plant-Specific Changes to the Licensing Basis," Revision 1, November 2002.

[3] RG 1.177, "An Approach for Plant-Specific, Risk-Informed Decisionmaking: Technical Specifications," August 1998.

[4] LS-PSA-014, “LaSalle PRA Quantification Notebook,” Revision 7, January 2008.

[5] “Standard for Probabilistic Risk Assessment for Nuclear Power Plant Applications,” (ASME RA-S-2002), Addenda RA-Sa-2003, and Addenda RA-Sb-2005, December 2005.

[6] Boiling Water Reactors Owners’ Group, “BWROG PSA Peer Review Certification Implementation Guidelines,” Revision 3, January 1997.

[7] “LaSalle MSPI Basis Document,” Revision 6, June 2008.

[8] “LaSalle Generating Station PRA Peer Review Using ASME PRA Standard Requirements,” July 2008.

[9] *Treatment of Parameter and Model Uncertainty for Probabilistic Risk Assessments*, EPRI Report 1016737, Palo Alto, CA, 2008.

[10] LS-PSA-021.06, “LaSalle Unit 2 FPRA Summary and Quantification Report”, Rev. 0, December 2008.

[11] Payne, A.C. Jr. et al., “Analysis of the LaSalle Unit 2 Nuclear Power Plant: Risk Methods Integration and Evaluation Program (RMIEP), NUREG/CR-4832, Vol. 1, July 1992.

[12] “PRA Procedures Guide”, NUREG/CR-2300, September 1981.

[13] “Analysis of Core Damage Frequency: Peach Bottom, Unit 2, External Events,” NUREG/CR-4550, Volume 4, Revision 1, Part 3, Table 4.14, page 4-83.

[14] NUREG/CR-5042, “Evaluation of External Hazards to Nuclear Power Plants in the United States,” December 1987.

[15] Kennedy, R.P., et al., “Capacity of Nuclear Power Plant Structures to Resist Blast Loading," Sandia National Laboratories, NUREG/CR-2462, September 1983.

[16] NUREG/CR-5500, “Reliability Study: General Electric Reactor Protection System, 1984-1995, Volume 3” May 1999.

[17] Gorham, E.D., et al., “Evaluation of Severe Accident Risks: Methodology for the Containment, Source Term, Consequence, and Risk Integration Analyses”, NUREG/CR-4551, December 1993.

[18] NUREG/CR-6850, EPRI Report 1011989, “Fire PRA Methodology for Nuclear Power Facilities”, September 2005.

[19] Gorman, Thomas, BWROG Assessment of IN 2007-07, 10/16/2007.

[20] “Guidance for Post-Fire Safe Shutdown Analysis”, NEI 00-01, Rev. 2.

[21] Exelon, ER-AA-600-1046, “Risk Metrics – NOED and LAR”, Revision 4.

[22] Chen, J.T., et al., “Procedural and Submittal Guidance for the Individual Plant Examination of External Events (IPEEE) for Severe Accident Vulnerabilities”, NUREG-1407, June 1991.

[23] “Severe Accident Risks: An Assessment for Five U.S. Nuclear Power Plants”, NUREG-1150, December 1990.

[24] NUREG/CR-5088, "Fire Risk Scoping Study: Investigation of Nuclear Power Plant Fire Risk, Including Previously Unaddressed Issues," U.S. Nuclear Regulatory Commission, January 1989.

[25] FAQ 08-0051, “Hot Short Duration,” June 2008, Draft, ADAMS Doc. # ML083400188.

[26] ASME/ANS RA-Sa-2009, “Addenda to RA-S-2008, Standard for Level 1/Large Early Release Frequency Probabilistic Risk Assessment for Nuclear Power Plant Applications,” February 2009.

[27] RG 1.200, “An Approach for Determining the Technical Adequacy of Probabilistic Risk Assessment Results for Risk Informed Activities,” Revision 2, March 2009.

[28] LaSalle PRA, ”Self-Assessment for LaSalle 2006 PRA Update”, LS-PSA-016, Revision 1, September 2007.

Appendix A

External Event Assessment

A.1 INTRODUCTION

This appendix discusses the external events assessment in support of the LaSalle SLC System CT extension risk assessment. This appendix uses as the starting point of this assessment the external event analyses in the LaSalle Risk Methods Integration and Evaluation Program (RMIEP) study (NUREG/CR-4832) [Ref. A-1].

EGC submitted the results of the RMIEP study to the NRC in 1994 as the basis for the LaSalle IPE/IPEEE Submittal. Each of the RMIEP external event evaluations were reviewed as part of the submittal and compared to the requirements of NUREG-1407. [Ref. A-6] The NRC transmitted to EGC on in 1996 their Staff Evaluation Report of the LaSalle IPE/IPEEE Submittal. No other LaSalle external event PSA models or analysis were developed by Exelon.

A.2 EXTERNAL EVENT SCREENING ASSESSMENT

The purpose of this portion of the assessment is to screen the spectrum of external event challenges to determine which external event hazards should be explicitly addressed as part of the LaSalle SLC System CT extension risk assessment.

Volume 7 of NUREG/CR-4832 provides the LaSalle RMIEP external event screening analysis. The screening assessment appropriately begins with the comprehensive list of potential external event hazards provided in the PRA Procedures Guide, NUREG/CR-2300. [Ref. A-7] Consistent with NUREG/CR-2300, the screening assessment employed the following criteria to eliminate external event challenges from further consideration:

1. The event is of equal or lesser damage potential than the events for which the plant is designed, or
2. The event has a significantly lower mean frequency of occurrence than other events with similar uncertainties and could not result in worse consequences than those events, or
3. The event cannot occur close enough to the plant to affect it, or
4. The event is included in the definition of another event

Although not listed explicitly as one of the screening criteria, the RMIEP screening assessment does incorporate (as evidenced in the Table 3.2-1 of Volume 7) the following criterion employed in the NUREG/CR-4550 study: "The event is slow in developing and there is sufficient time to eliminate the source of the threat or to provide an adequate response." This criterion is also considered appropriate.

The following external events were identified for further assessment in the LaSalle RMIEP study:

- Seismic
- Internal Fires
- Aircraft Impact
- Extreme Winds and Tornadoes
- Transportation/Toxic Chemicals/Explosions
- Turbine Generated Missiles
- External Flooding

Seismic

Discussed here in Section A.3.

Internal Fires

Discussed here in Section A.4.

Aircraft Impact

Section 3.4.2 of Volume 7 of the RMIEP study provides a bounding assessment of the aircraft impact hazard. The assessment approach is consistent with the guidance provided in NUREG/CR-5042, Evaluation of External Hazards to Nuclear Power Plants in the United States. [Ref. A-8]

The LaSalle RMIEP bounding assessment conservatively assumes that any impact to a Category I structure sufficient to cause back face scabbing of an exterior wall results in a core damage probability of 1.0. The resulting bounding core damage frequency was estimated at 4.84E-07/yr.

The LaSalle RMIEP bounding assessment did not include the diesel generator building in the assessment because it is much smaller than the other key buildings and it is shielded on two sides by other buildings. Using the RMIEP-calculated reactor building aircraft impact CDF contribution of 3.93E-07/yr (obtained from Table 3.4-5 of

NUREG/CR-4832 Volume 7), the contribution from an aircraft impact on the diesel generator building is estimated here as follows:

3.93E-07/yr x 0.20 x 0.50 x 1.00 = 3.93E-08/yr

where:
0.20 = DG Bldg. area / Rx Bldg. area (based on review of plant drawings)
0.50 = 2 of the 4 compass directions are protected by other buildings
1.00 = Per the RMIEP assumptions, the CCDP is 1.0

Incorporating the DG building into the RMIEP bounding assessment framework results in a conservative CDF estimate of 5.23E-07/yr due to aircraft impacts.

If it is assumed here that an aircraft impact sufficient to result in back face scabbing of building exterior walls does not conservatively result in a CCDP of 1.0 (as assumed in the RMIEP framework), but rather a more reasonable value on the order of 0.1 or less, the aircraft impact induced CDF is estimated in the mid to lower E-8/yr range. Such an estimate is approximately 1% of the LaSalle LS06C CDF. Explicit quantification of such accidents would not provide any significant quantitative or qualitative information to this assessment; therefore, such sequences are appropriately excluded from further analysis.

Other External Hazards

The other external hazards are assessed to be non-significant contributors to plant risk:

- Extreme Winds / Tornadoes: The RMIEP study estimated the CDF from extreme wind and tornado hazards at a medium value of 3E-08/yr (mean value of 7.5E-8/yr if lognormal distribution and EF=10 assumed). The majority of this estimate is due to tornado induced dual unit loss of offsite power (DLOOP) with failure to recover offsite power. Severe weather induced DLOOP sequences are already modeled in the LS06C PRA.
- Offsite / Transportation Hazards: Bounding assessments in the RMIEP study dispositioned such hazards as non-significant risk contributors.
- Turbine Missiles: A bounding assessment in the RMIEP study dispositioned turbine missiles as a non-significant risk contributor.
- Extreme Floods: All safety-related structures on the LaSalle site are at a grade elevation of at least 710’ mean sea level (MSL). The probable maximum flood elevation at the site (including coincident wave effects) is 522.5’ (MSL). The probable maximum precipitation (based on conservative assumptions) results in a water level elevation at the site of 710.3’ MSL. The RMIEP study concluded that external flood hazards are a non-significant risk contributor.

Explicit treatment of these other external hazards is not necessary for most PSA applications (including the SLC System CT extension risk assessment) and would not provide additional risk-informed insights for decision making.

A.3 SEISMIC ASSESSMENT

There is no currently maintained quantitative Seismic PRA for LaSalle. The following section discusses seismic ATWS insights from the LaSalle RMIEP study and NUREG-1150.

A.3.1 RMIEP Seismic Overview

The RMIEP study analyzed LaSalle seismic risk employing the methodology sponsored by the U.S. NRC under the Seismic Safety Margin Research Program (SSMRP) and developed by Lawrence Livermore National Laboratory (LLNL). The key elements of the LaSalle RMIEP seismic risk analysis are:

1. Development of the seismic hazard at the LaSalle site including the effect of local site conditions.
2. Comparisons of the best estimate seismic response of structures, components, and piping systems with design values for the purposes of specifying median responses in the seismic risk calculations.
3. Investigation of the effects of hydrodynamic loads on seismic risk.
4. Development of building and component fragilities for important structures and components.
5. Development of the system models (e.g., event and fault trees).
6. Estimation of the seismically induced CDF.

The RMIEP study includes plant specific fragilities for the reactor internals, the SBLC pumps and the SBLC tanks (as well as for other plant specific equipment and structures). The RMIEP study showed that seismic-induced ATWS is a non-significant contributor (<1%) to the plant seismic CDF.

A.3.2 Peach Bottom NUREG-1150 Seismic Overview

The NUREG/CR-4551 study completed an update of the NUREG-1150 severe accident analysis for five nuclear power plants, including the Peach Bottom Atomic Power Station. It is assumed that this analysis is generically appropriate for all BWRs due to the similarity of systems.

This analysis addressed both internal and external events, including seismic initiators. Peach Bottom utilized the Seismic Margins Analysis as part of the Individual Plant Examination for External Events (IPEEE).

The NUREG/CR-4551 Peach Bottom seismic analysis screened seismic-induced ATWS accident sequences as non-significant contributors (<1%) to the plant seismic CDF. Based on the Peach Bottom results, I is judged that seismic-induced ATWS accident sequences are similarly non-significant contributors to the LaSalle plant seismic CDF.

A.3.3 Seismic Risk Impact Conclusion

Based on the preceding discussions, it is concluded that the risk of a seismically induced ATWS is non-significant and does not impact the decision-making for the proposed LaSalle SLC CT extension.

A.4 INTERNAL FIRES ASSESSMENT

This internal fire assessment is based on the extensive work performed for the LaSalle RMIEP study and an Interim LaSalle Fire PRA (FPRA) model developed in 2008.

A.4.1 RMIEP Internal Fires Overview

The internal fires LaSalle RMIEP study is a detailed analysis that, like the seismic analysis, uses quantification and model elements (e.g., system fault trees, event tree structures, random failure rates, common cause failures, etc.) consistent with those employed in the internal events portion of the RMEIP study. The LaSalle RMIEP internal fires study was performed during the same time frame as the NUREG-1150 studies [Ref. A-9] and the Fire Risk Scoping Study. [Ref. A-10]

The RMIEP internal events study models were used to support sequence quantification. This ensured that the fire sequence quantifications included plant-specific line-up, reliability, and human pre-accident reliability data. Plant walkdowns were performed to document plant-specific combustible loading, suitability of fire severity factors, locations of critical equipment, locations of fire dampers, suitability of doors and other fire barriers, effectiveness of fire detection and suppression systems, and other component specific attributes. Plant-specific cable location data were used to spatially identify control and power cables passing through or powering components in the various fire areas.

The key elements of the LaSalle RMIEP internal fires assessment are consistent with current FPRA structures and include:

1. Fire hazard analysis
2. Fire growth and propagation
3. Fire suppression
4. Accident sequence development and quantification

The RMIEP study showed that fire-induced ATWS is a non-significant contributor (<1%) to the plant fire CDF.

A.4.2 NUREG/CR-6850 Screening

NUREG/CR-6850, Volume 2, Section 2.5.1 (page 2-7) [Ref. A-3] provides the following directions for selecting components and accident scenarios to be examined in an internal fire PRA:

> *"The types of sequences that could generally be eliminated from the PRA include the following…Sequences associated with events that, while it is possible that the fire could cause the event, a low-frequency argument can be justified. For example, it can often be easily demonstrated that anticipated transient without scram (ATWS) sequences do not need to be treated in the Fire PRA because fire-induced failures will almost certainly remove power from the control rods (resulting in a trip), rather than cause a "failure-to-scram" condition. Additionally, fire frequencies multiplied by the independent failure-to-scram probability can usually be argued to be small contributors to fire risk."*

As can be seen from the NUREG/CR-6850 excerpt above, fire-induced ATWS contributors are generally acknowledged as non-significant contributors to the fire risk profile.

A.4.3 LaSalle Interim Fire PRA

The current LaSalle FPRA [Ref. A-4] is an interim implementation of NUREG/CR-6850; that is, not all tasks identified in NUREG/CR-6850 are yet completely addressed or implemented due to the changing state-of-the-art of industry at the time of the 2008-2009 LaSalle FPRA development.

NUREG/CR-6850 task limitations and other precautions regarding the 2008-2009 FPRA upgrade for LaSalle are as follows:

- Multiple Spurious Operation (MSO) Review (NUREG/CR-6850 Task 2) - MSOs are reviewed and considered; however, an expert panel is not used. At the time of the 2008 LaSalle FPRA the BWR Owners' Group was developing a generic list of MSOs to be considered. At future updates the list should be reviewed and incorporated as necessary.
- Instrumentation Review (NUREG/CR-6850 Task 2) - The new requirements of NUREG/CR-6850 regarding the explicit identification and modeling of instrumentation required to support PRA credited operator actions is not addressed. The industry treatment for this task is still being developed.

- The Balance of Plant (NUREG/CR-6850 Task 2) - The BOP is not fully treated. BOP support system failure is conservatively assumed. Additional modeling could be conducted to reduce the fire CDF due to this assumption if time and funding is available in future updates.
- Large Early Release Frequency (LERF) (NUREG/CR-6850 Task 2) - LERF is not considered. LERF is expected to be addressed in future updates.
- Limited Analysis Iterations (NUREG/CR-6850 Task 9-12) - The process of conducting a FPRA is iterative, identifying conservative assumptions and high risk compartments and performing analyses to refine the assumptions and reduce those compartment risks. The ability to conduct iterations is limited based on resources. The scenarios developed for the 2008-2009 LaSalle FPRA may benefit from further refinement as necessary for application or for future updates.
- Multi-Compartment Review (NUREG/CR-6850 Task 11) - This subtask reviews the fire analysis compartment boundaries to ensure they are sufficiently robust to prevent the spread of fire between FPRA analysis compartments or that such propagations are adequately addressed by the developed scenarios. The design and plant layout of LaSalle make fire propagation to multiple compartments unlikely compared to the fire risk in individual compartments. RMIEP [A-1] performed a multi-compartment analysis that can be used along with the results of the 2008-2009 FPRA as necessary.
- Seismic Fire Interactions (NUREG/CR-6850 Task 13) - This task reviews previous assessments to identify any specific interaction between suppression system and credited components or adverse impact of fire protection system interactions that should be accounted for in the FPRA. The results of RMIEP [A-1] are considered appropriate for the LaSalle FPRA.
- Uncertainty and Sensitivity Analysis (NUREG/CR-6850 Task 15) - This task explores the impacts of possible variation of input parameters used in the development of the model and the inputs to the analysis on the FPRA results. This task is not currently addressed because the industry is still developing an appropriate methodology.

Some limitations of these items are:

- Item 1(MSO), represents a source of additional fire CDF contribution (i.e., if the BWROG MSO list includes MSOs not addressed in this update).
- Item 2 (Instrumentation Review) represents a potential additional fire CDF contribution that cannot be estimated at this time since the

methodology is not established.

- Items 3 (BOP) and 8 (Uncertainty) are potential sources of conservatism in the results.
- Item 4 (LERF) is a future scope issue not affecting the fire CDF model.
- Items 5 (Iterations) and 6 (Multi-compartment) represent modeling assumptions that should be reviewed with each FPRA application to determine their applicability and/or potential impact on the decision.
- Item 7 (Seismic) is a FPRA application completeness issue for which the methodology is not yet established.

Given the above, the 2008-2009 LaSalle Unit 1 and Unit 2 FPRA models are judged to provide a meaningful representation of fire CDF contributors, and is appropriate for use in risk-informed decision-making, to the extent that these limitations are recognized and addressed in each application, as appropriate. The model is, however, “interim” due to the stated limitations.

Based on the interim LaSalle Fire PRA, the likelihood of a fire-induced ATWS scenario is approximately 5E-8/yr, this is approximately 1% of the internal events likelihood of an ATWS event. As such, like the LaSalle RMIEP study the LaSalle interim FPRA shows that fire-induced ATWS is a non-significant contributor to the plant risk profile.

A.4.4 BWROG Position on Fire-Induced Failure to Scram

Fire scenarios that could threaten the function of the reactor protection system have been addressed in a BWROG assessment (refer to Appendix C) of NRC Information Notice 2007-07. [Ref. A-5] The assessment outlines the types of scenarios in which a fire could energize a circuit through a “hot short” that would compromise scram capabilities. The assessment also indicates that there are multiple actions that would have to occur in conjunction to the very specific fire scenarios for function to be lost.

The assessment concluded that these scenarios are of low-likelihood, low safety-significance, and have multiple layers of defense-in-depth which would either prevent the condition, or adequately mitigate it.

A.4.5 Fire Risk Impact Conclusion

Based on the preceding discussions, it is concluded that fire induced ATWS is a non-significant contributor to the plant risk profile, and thus does not impact the decision-making of the proposed LaSalle SLC CT extension.

A.5 REFERENCES

[A-1] Payne, A.C. Jr. et al., “Analysis of the LaSalle Unit 2 Nuclear Power Plant: Risk Methods Integration and Evaluation Program (RMIEP), NUREG/CR-4832, Vol. 1, July 1992.

[A-2] *A methodology for assessment of nuclear power plant seismic margin*, EPRI NP-6041, Palo Alto, CA: 2001.

[A-3] NUREG/CR-6850, EPRI Report 1011989, “Fire PRA Methodology for Nuclear Power Facilities”, September 2005.

[A-4] LS-PSA-021.06, “LaSalle Unit 2 FPRA Summary and Quantification Report”, Rev. 0, December 2008.

[A-5] Gorman, Thomas, BWR Owners Group (BWROG), “BWROG Assessment of IN 2007-07”, 10/16/2007.

[A-6] Chen, J.T., et al., “Procedural and Submittal Guidance for the Individual Plant Examination of External Events (IPEEE) for Severe Accident Vulnerabilities”, NUREG-1407, June 1991.

[A-7] “PRA Procedures Guide”, NUREG/CR-2300, September 1981.

[A-8] NUREG/CR-5042, “Evaluation of External Hazards to Nuclear Power Plants in the United States,” December 1987.

[A-9] “Severe Accident Risks: An Assessment for Five U.S. Nuclear Power Plants”, NUREG-1150, December 1990.

[A-10] NUREG/CR-5088, "Fire Risk Scoping Study: Investigation of Nuclear Power Plant Fire Risk, Including Previously Unaddressed Issues," U.S. Nuclear Regulatory Commission, January 1989.

Appendix B

Uncertainty Analysis

This appendix evaluates uncertainties that could impact the SLC CT extension assessment. Section B.1 and B.2 evaluate model uncertainties. Section B.3 evaluates parametric uncertainty.

- Section B.1 provides LaSalle specific modeling uncertainty evaluations for the base case.
- Section B.2 provides an examination of the specific cutsets that affect the change in the CDF risk metric associated with the change in the SLC CT.
- Section B.3 documents the parametric uncertainty analysis of the model used in this application.

B.1 MODEL UNCERTAINTIES SUMMARY

Postulated modeling uncertainties are identified through a systematic structured process. Table B-1 summarizes the candidate model uncertainties and their impacts on the CDF and LERF risk metrics for LaSalle. Four modeling uncertainties that are considered important model uncertainty are identified in Table B-2.

It is noted that none of these cases evaluates modeling issues associated with the SLC system or ATWS sequences.

Table B-1

SUMMARY OF SENSITIVITY CASES TO IDENTIFY RISK METRIC CHANGES ASSOCIATED WITH CANDIDATE MODELING UNCERTAINTIES(5)

Source of Candidate Modeling Uncertainty(3)	CDF Impact (/yr)(1)		LERF Impact (/yr)(2)	
	Upper Bound	Lower Bound	Upper Bound	Lower Bound
1A) Applicability of industry experience to environmentally influenced events (i.e., loss of service water, LOOP, etc.) – Loss of Service Water	4.05E-06	3.96E-06	2.98E-07	2.97E-07
1B) Applicability of industry experience to environmentally influenced events (i.e., loss of service water, LOOP, etc.) – Loss of Intake Structure	4.00E-06(5)	--	2.97E-07(5)	--
1C) Applicability of industry experience to environmentally influenced events (i.e., loss of service water, LOOP, etc.) – Severe and Extreme Weather Induced LOOP	4.10E-06	3.91E-06	2.97E-07	2.97E-07
2A) Treatment of Rare and Extremely Rare Events – Excessive LOCA	3.99E-06	3.98E-06	2.98E-07	2.97E-07
2B) Treatment of Rare and Extremely Rare Events – SW Flood in RB	5.24E-06	3.55E-06	3.11E-07	2.92E-07
3), 4), 6), 11), 17), 22) Beyond Design Basis Environment	4.49E-06	3.80E-06	2.97E-07	2.97E-07
5) and 8) Case A) Impact of DLOOP/SBO conditions on allowable AC Recovery	4.01E-06	3.97E-06	2.97E-07	2.97E-07
5) and 8) Case B) Impact of DLOOP/SBO conditions – DFP injection	4.31E-06	3.97E-06	2.97E-07	2.97E-07
7), 12), 18) Room Cooling Assumptions	(6)	(6)	(6)	(6)
9) & 15) Impact of venting on systems	4.83E-06	--	2.97E-07	--
10) Time Dependency failures due to environmental conditions	(3)	(3)	(3)	(3)
13) Recirc Pump Seal Leakage	(3)	(3)	(3)	(3)
14) Suppression Pool Strainer Performance	4.13E-06	3.93E-06	2.98E-07	2.97E-07
16) Treatment of Instrumentation required for operator action	5.51E-06(5)	3.21E-06(5)	5.48E-07(5)	1.69E-07(5)

Table B-1

SUMMARY OF SENSITIVITY CASES TO IDENTIFY RISK METRIC CHANGES ASSOCIATED WITH CANDIDATE MODELING UNCERTAINTIES(5)

Source of Candidate Modeling Uncertainty(3)	CDF Impact (/yr)(1)		LERF Impact (/yr)(2)	
	Upper Bound	Lower Bound	Upper Bound	Lower Bound
19) Water Hammer Impact on System Performance (Failure Probability of Pipe Rupture)	4.40E-06	3.84E-06	3.03E-07	2.95E-07
20) Alternate Alignments	(7)	(7)	(7)	(7)
21) Procedural Changes	3.98E-06(5)	--	2.97E-07(5)	--
23) Flood Frequency Data	8.15E-06(5)	2.53E-06	3.39E-07(5)	2.83E-07
24) Dependent HEP Recovery file	9.72E-06(5)	3.37E-06(5)	7.30E-07(5)	2.54E-07(5)
25) Level 2 LERF as Affected by the Phenomenological Effects of Severe Accident Progression	--	--	8.98E-07(5)	2.97E-07

Notes to Table B-1:

(1) Compared with a LS206C base CDF of 3.98E-06/yr quantified with a 1E-11/yr truncation limit.
(2) Compared with a LS206C base LERF of 2.97E-07/yr quantified with a 1E-11/yr truncation limit.
(3) Subsumed by Case 5/8.
(4) Not Used.
(5) Most of the sensitivity results were produced by manipulating the cutset results file. These results were produced by re-quantifying the entire model.
(6) Room cooling sensitivities not performed at this time for the base PRA.
(7) The LaSalle PRA models all identified significant alignments.

Table B-2

IMPORTANT MODEL UNCERTAINTY CASES

Sensitivity Case	CDF Increase[1]	LERF Increase[1]
Sensitivity Case 16: Instrumentation Effects	1.4[2]	1.8[2]
Sensitivity Case 23: Flood Frequency Data	2.0	1.1[2]
Sensitivity Case 24: Dependent HEP Recovery Treatment	2.4	2.5
Sensitivity Case 25: Level 2 Phenomenology	--	3.0

(1) Calculated as:

- CDF increase: CDF Upper Bound / 3.98E-6
- LERF increase: LERF Upper Bound / 2.97E-7

(2) These changes in the risk metric are below 2.0, but they are retained for identification to the decision-makers.

B.2 MODEL UNCERTAINTIES ASSOCIATED WITH SLCS OUT OF SERVICE

To determine the relative importance of individual contributors for this SLC CT extension, the focus needs to be on the results of the CDF assessment for the SLC system out of service. To obtain insights regarding this change to the base case results, the first step is to take the out-of-service case cutsets and remove the base case cutsets. This is done in CAFTA through the delete term function of the cutset editor. The result of this process is a list of cutsets that are unique to the SLC out-of-service case and do not appear in the base case. These cutsets can be used to determine information regarding significant accident sequences or cutsets that determine the change in risk metrics, i.e., drive the delta-CDF assessment.

Table B-3 presents the top ten cutsets for the delta-CDF assessment. Table B-4 presents the importance measures associated with the delta-CDF assessment.

Tables B-3 and B-4 show that the Scram system hardware failure is the most important contributor for the SLC system out-of-service case. The top ten cutsets are primarily mechanical failures of the RPS system. Some cutsets also include high probability HEPs associated with RPS failure, but all include the mechanical failure of RPS. Of the events appearing in Table B-4 with F-V values greater than 2E-2, RPS failure events are the only basic events other than initiators. This is due to the fact that the cutsets associated with the SLC system out-of-service are again predominantly single failures of the Scram system leading to core damage. The other basic events are HEPs and other events associated with Scram system failure.

It can be concluded that the SLC out-of-service case CDF is dominated by failures of the Scram system. The basic events used to model the Scram system failures are already considered in the base uncertainty assessment. Similarly, the LERF results are dominated by failures of the Scram system for the SLC out-of-service case. The LERF results provide similar insights to the CDF results insights.

Because of the large potential impact of the mechanical failure to scram probability on the assessment of the risk metrics for this application, it is prudent to perform a sensitivity recognizing the uncertainty in the mechanical common cause failure to scram probability.

This sensitivity is performed by including the 95% upper bound on the common cause mechanical scram failure probability in both the base case and the case with the SLC system set to TRUE.

The results of the sensitivity case are shown in Table B-5.

Based on the results of the sensitivity analysis, it is found that the acceptance criteria are all met even for this extreme assumption regarding the common cause mechanical scram failure probability.

Table B-3

TOP TEN CDF CUTSETS CONTRIBUTING TO ΔCDF

#	Cutset Prob	Event Prob	Event	Description
1	3.95E-06	1.89E+00	%TT	TURBINE TRIP WITH BYPASS INITIATING EVENT
		1.00E+00	2MSOP-AT-LVL-H--	OPERATOR LOWERS RPV LEVEL BELOW LVL 1 DURING ATWS
		9.95E-01	2MSOPMSIVINLKH--	HEP: OP FAILS TO BYPASS LOW LEVEL MSIV INTERLOCK OR N2 HI DW ISOLATION (ATWS)
		2.10E-06	2RPCDRPS-MECHFCC	RPS MECHANICAL FAILURE
		1.00E+00	2SY--PWR5PERCF--	POWER LEVEL GREATER THAN 3%
2	2.27E-07	1.08E-01	%TC	LOSS OF CONDENSER VACUUM INITIATING EVENT
		2.10E-06	2RPCDRPS-MECHFCC	RPS MECHANICAL FAILURE
3	1.97E-07	1.89E+00	%TT	TURBINE TRIP WITH BYPASS INITIATING EVENT
		9.95E-01	2MSOPMSIVINLKH--	HEP: OP FAILS TO BYPASS LOW LEVEL MSIV INTERLOCK OR N2 HI DW ISOLATION (ATWS)
		2.10E-06	2RPCDRPS-MECHFCC	RPS MECHANICAL FAILURE
		1.00E+00	2SY--PWR5PERCF--	POWER LEVEL GREATER THAN 3%
		5.00E-02	2VSVBTAILPIPAU--	TAILPIPE VACUUM BREAKER STICKS OPEN (ATWS)
4	1.08E-07	5.13E-02	%TM	MSIV CLOSURE INITIATING EVENT
		2.10E-06	2RPCDRPS-MECHFCC	RPS MECHANICAL FAILURE
5	1.04E-07	4.97E-02	%TF	LOSS OF FEEDWATER INITIATING EVENT
		2.10E-06	2RPCDRPS-MECHFCC	RPS MECHANICAL FAILURE
6	8.78E-08	4.18E-02	%TI	INADVERTENTLY OPEN RELIEF VALVE INITIATING EVENT
		2.10E-06	2RPCDRPS-MECHFCC	RPS MECHANICAL FAILURE
7	4.70E-08	1.89E+00	%TT	TURBINE TRIP WITH BYPASS INITIATING EVENT
		1.00E+00	2MSOP-AT-LVL-H--	OPERATOR LOWERS RPV LEVEL BELOW LVL 1 DURING ATWS
		9.95E-01	2MSOPMSIVINLKH--	HEP: OP FAILS TO BYPASS LOW LEVEL MSIV INTERLOCK OR N2 HI DW ISOLATION (ATWS)

Table B-3

TOP TEN CDF CUTSETS CONTRIBUTING TO ΔCDF

#	Cutset Prob	Event Prob	Event	Description
		5.00E-02	2RPEE-ARIRPS-FCC	COMMON CAUSE FAILURE OF ARI AND RPS ELECTRICAL
		3.70E-06	2RPPARPS-ELECFCC	RPS ELECTRICAL FAILURE
		1.35E-01	2RROPMANSCRAMH--	OPERATOR FAILS TO MANUALLY SCRAM REACTOR
		1.00E+00	2SY--PWR5PERCF--	POWER LEVEL GREATER THAN 3%
8	4.64E-08	2.21E-02	%RBCCW	LOSS OF RBCCW INITIATING EVENT
		2.10E-06	2RPCDRPS-MECHFCC	RPS MECHANICAL FAILURE
9	3.97E-08	1.89E+00	%TT	TURBINE TRIP WITH BYPASS INITIATING EVENT
		1.00E-02	2MSAVMSIVTRIPF--	COND PROB OF MSIV ISOL FOLLOWING A TRIP
		2.10E-06	2RPCDRPS-MECHFCC	RPS MECHANICAL FAILURE
10	3.95E-08	1.89E+00	%TT	TURBINE TRIP WITH BYPASS INITIATING EVENT
		9.95E-01	2MSOPMSIVINLKH--	HEP: OP FAILS TO BYPASS LOW LEVEL MSIV INTERLOCK OR N2 HI DW ISOLATION (ATWS)
		1.00E-02	2PH--HIHEATLDF--	HIGH HEAT LOAD CAUSES HIGH DRYWELL PRESSURE
		2.10E-06	2RPCDRPS-MECHFCC	RPS MECHANICAL FAILURE
		1.00E+00	2SY--PWR5PERCF--	POWER LEVEL GREATER THAN 3%

Table B-4

BASIC EVENT IMPORTANCE MEASURES FOR CDF ASSESSMENT FOR CUTSETS CONTRIBUTING TO ΔCDF

Event Name	Probability	Fus Ves	BirnBm	Red W	Ach W	Description
2RPCDRPS-MECHFCC	2.10E-06	9.87E-01	2.38E+00	77.323	3.02E+05	RPS MECHANICAL FAILURE
%TT	1.89E+00	8.55E-01	2.29E-06	6.884	0.6	TURBINE TRIP WITH BYPASS INITIATING EVENT
2MSOPMSIVINLKH--	9.95E-01	8.39E-01	4.26E-06	6.195	1	HEP: OP FAILS TO BYPASS LOW LEVEL MSIV INTERLOCK OR N2 HI DW ISOLATION (ATWS)
2SY--PWR5PERCF--	1.00E+00	8.39E-01	4.24E-06	6.195	1	POWER LEVEL GREATER THAN 3%
2MSOP-AT-LVL-H--	1.00E+00	7.91E-01	4.00E-06	4.787	1	OPERATOR LOWERS RPV LEVEL BELOW LVL 1 DURING ATWS
%TC	1.08E-01	4.54E-02	2.13E-06	1.048	1.38	LOSS OF CONDENSER VACUUM INITIATING EVENT
2VSVBTAILPIPAU--	5.00E-02	3.96E-02	4.00E-06	1.041	1.75	TAILPIPE VACUUM BREAKER STICKS OPEN (ATWS)
%TM	5.13E-02	2.16E-02	2.13E-06	1.022	1.4	MSIV CLOSURE INITIATING EVENT
%TF	4.97E-02	2.09E-02	2.13E-06	1.021	1.4	LOSS OF FEEDWATER INITIATING EVENT
%TI	4.18E-02	1.76E-02	2.13E-06	1.018	1.4	INADVERTENTLY OPEN RELIEF VALVE INITIATING EVENT
2RPPARPS-ELECFCC	3.70E-06	1.29E-02	1.77E-02	1.013	3.48E+03	RPS ELECTRICAL FAILURE
2RPEE-ARIRPS-FCC	5.00E-02	1.28E-02	1.29E-06	1.013	1.24	COMMON CAUSE FAILURE OF ARI AND RPS ELECTRICAL
2RROPMANSCRAMH--	1.35E-01	1.17E-02	4.39E-07	1.012	1.08	OPERATOR FAILS TO MANUALLY SCRAM REACTOR
%RBCCW	2.21E-02	9.29E-03	2.12E-06	1.009	1.41	LOSS OF RBCCW INITIATING EVENT
%LOOP	1.76E-02	7.97E-03	2.29E-06	1.008	1.44	LOSS OF OFF-SITE POWER INITIATING EVENT
2MSAVMSIVTRIPF--	1.00E-02	7.95E-03	4.02E-06	1.008	1.79	COND PROB OF MSIV ISOL FOLLOWING A TRIP
2PH--HIHEATLDF--	1.00E-02	7.91E-03	4.00E-06	1.008	1.78	HIGH HEAT LOAD CAUSES HIGH DRYWELL PRESSURE
%TIA	1.88E-02	7.90E-03	2.12E-06	1.008	1.41	LOSS OF INSTRUMENT AIR INITIATING EVENT
%TBCCW	1.58E-02	6.64E-03	2.12E-06	1.007	1.41	LOSS OF TBCCW INITIATING EVENT
2MSOPMSIVINLKHSU	5.00E-03	3.97E-03	4.02E-06	1.004	1.79	HEP: OP SUCCESSFULLY BYPASSES MSIV LOW LEVEL INTERLOCK
%DLOOP	7.48E-03	3.39E-03	2.29E-06	1.003	1.45	DUAL UNIT LOSS OF OFF-SITE POWER INITIATING

Table B-4

BASIC EVENT IMPORTANCE MEASURES FOR CDF ASSESSMENT FOR CUTSETS CONTRIBUTING TO ΔCDF

Event Name	Probability	Fus Ves	BirnBm	Red W	Ach W	Description
						EVENT
2ACSYLOOPNLOCA--	2.40E-03	3.25E-03	6.84E-06	1.003	2.35	COND PROB OF A LOOP GIVEN NO LOCA SIGNAL
2PLASPRESSUREF--	1.50E-01	1.79E-03	6.02E-08	1.002	1.01	FAILURE OF SRVs TO RECLOSE ON REDUCED PRESSURE
2PLASTTEVENTSF--	1.50E-02	1.79E-03	6.02E-07	1.002	1.12	PROB OF SORV FOR TT EVENTS
%S2-ST	3.71E-03	1.56E-03	2.12E-06	1.002	1.42	INIT: SMALL BREAK LOCA - ABOVE CORE INSIDE DRYWELL
%MS	1.08E+00	1.17E-03	5.48E-09	1.001	1	MANUAL SHUTDOWN INITIATING EVENT
%TSW	2.73E-03	1.15E-03	2.12E-06	1.001	1.42	LOSS OF SERVICE WATER INITIATING EVENT
%TAC242Y	6.55E-04	2.93E-04	2.26E-06	1	1.45	LOSS OF 4.16 kVAC BUS 242Y INITIATING EVENT
%TAC252	6.55E-04	2.75E-04	2.12E-06	1	1.42	LOSS OF 6.9 kVAC BUS 252 INITIATING EVENT
2ARASC11F400-K--	2.50E-02	1.56E-04	3.15E-08	1	1.01	ARI SOV 2C11-F400 FAILS TO CLOSE
2ARASC11F401-K--	2.50E-02	1.56E-04	3.15E-08	1	1.01	ARI SOV 2C11-F401 FAILS TO CLOSE
1SAAM1IA054--U--	1.20E-04	9.42E-05	3.97E-06	1	1.79	IA RECEIVER 1IA01D RELIEF VALVE 1IA054 SPUR OPENS
1SAAM1SA029--U--	1.20E-04	9.42E-05	3.97E-06	1	1.79	SA RECEIVER 1SA01DB RELIEF VALVE 1SA029 SPUR OPENS
1SAAM2SA029--U--	1.20E-04	9.42E-05	3.97E-06	1	1.79	SA RECEIVER 2SA01DB RELIEF VALVE 2SA029 SPUR OPENS
2SAAM0SA017--U--	1.20E-04	9.42E-05	3.97E-06	1	1.79	SA RECEIVER 0SA01D RELIEF VALVE 0SA017 SPUR OPENS
2SAAM1SA053--U--	1.20E-04	9.42E-05	3.97E-06	1	1.79	SA RECEIVER 1SA01DA RELIEF VALVE 1SA053 SPUR OPENS
2SAAM2IA054--U--	1.20E-04	9.42E-05	3.97E-06	1	1.79	IA RECEIVER 2IA01D RELIEF VALVE 2IA054 SPUR OPENS
2SAAM2SA053--U--	1.20E-04	9.42E-05	3.97E-06	1	1.79	SA RECEIVER 2SA01DA RELIEF VALVE 2SA053 SPUR OPENS
2FW--SINGELEMF--	5.00E-02	9.31E-05	9.41E-09	1	1	CONDITIONAL PROBABILITY THAT FW IN SINGLE ELEMENT CONTROL

Table B-4

BASIC EVENT IMPORTANCE MEASURES FOR CDF ASSESSMENT FOR CUTSETS CONTRIBUTING TO ΔCDF

Event Name	Probability	Fus Ves	BirnBm	Red W	Ach W	Description
%TRLA	2.24E-03	4.88E-05	1.10E-07	1	1.02	MEDIUM RANGE RX WATER REFERENCE LEG A LINE BREAK
%TRLB	2.24E-03	4.88E-05	1.10E-07	1	1.02	MEDIUM RANGE RX WATER REFERENCE LEG B LINE BREAK
%FSRB12	9.94E-05	4.31E-05	2.19E-06	1	1.43	FPS PIPE RUPTURE IN REACTOR BLDG.
2FPOPMANTRIP1H--	1.00E+00	4.31E-05	2.18E-10	1	1	HEP: OP Fails to Trip FPS for FPS Break (Short Term)
SABR-FUNCTION---	1.00E+00	2.40E-05	1.21E-10	1	1	SA TRAILER MOUNTED AIR COMPRESSOR IS NOT CONNECTED OR STARTED
2ADSV-SRVFTC-F--	3.90E-02	2.39E-05	3.09E-09	1	1	COND PROB OF A SORV GIVEN AN ATWS (NON-TT EVENT)
2FWPMCNTRLFW-F--	1.00E-02	2.17E-05	1.10E-08	1	1	FAILURE TO CONTROL FW INSTABILITY DURING POWER REDUCTION
2FWOPMOV10AB-H--	6.10E-02	2.08E-05	1.72E-09	1	1	HEP: OP FAILS TO CLOSE TDRFP MOVs 10A & B (PER LGA-HD-01 OR LOA-FW-2)
2CWPM2CW01PB-M--	2.09E-02	1.17E-05	2.84E-09	1	1	CW PUMP 2CW01PB MUA
BSACM-3-OF-3-XCC	1.17E-05	9.21E-06	3.97E-06	1	1.79	CCFTR OF 3 OF 3 SA COMPRESSORS
2CDMC-SJAE---F--	1.00E-05	7.85E-06	3.97E-06	1	1.79	CD STEAM JET AIR EJECTOR (SJAE) FAILS TO MAINTAIN CONDENSER VACUUM
2MCSETURBINE-F--	1.00E-05	7.85E-06	3.97E-06	1	1.79	FAILURE OF TURBINE GLAND SEALING SYSTEM
2CWPMCWAB&C--XCC	9.31E-06	7.31E-06	3.97E-06	1	1.79	CCFTR OF CIRCULATING WATER PUMPS
2CWPM2CW01PA-M--	2.09E-02	7.17E-06	1.73E-09	1	1	CW PUMP 2CW01PA MUA
2CWPM2CW01PC-M--	2.09E-02	7.17E-06	1.73E-09	1	1	CW PUMP 2CW01PC MUA
2DCCB211Y16--K--	1.00E-03	4.65E-06	2.35E-08	1	1	125 VDC CB 2DC11E-CB16 DIST PANEL 211Y TO ARI CNTRL PNL 2H13-P800 FAILS TO CLOSE
2DCCB212Y21--K--	1.00E-03	4.65E-06	2.35E-08	1	1	125 VDC CB 2DC13E-CB21 DIST PANEL 212Y TO ARI CNTRL PNL 2H13-P801 FAILS TO OPEN
BWSFL--0-1---PCC	4.91E-06	3.86E-06	3.97E-06	1	1.79	CCF OF WS STRAINERS 0 & 1 DUE TO PLUGGING
BWSFL--0-2---PCC	4.91E-06	3.86E-06	3.97E-06	1	1.79	CCF OF WS STRAINERS 0 & 2 DUE TO PLUGGING
BWSFL--1-2---PCC	4.91E-06	3.86E-06	3.97E-06	1	1.79	CCF OF WS STRAINERS 1 & 2 DUE TO PLUGGING
BWSFL-0-1-2--PCC	4.13E-06	3.24E-06	3.97E-06	1	1.79	CCF OF ALL 3 WS STRAINERS DUE TO PLUGGING

Table B-4

BASIC EVENT IMPORTANCE MEASURES FOR CDF ASSESSMENT FOR CUTSETS CONTRIBUTING TO ΔCDF

Event Name	Probability	Fus Ves	BirnBm	Red W	Ach W	Description
2PLASRECLOSE-F--	8.50E-01	3.12E-06	1.86E-11	1	1	SRVs SUCCESSFULLY RECLOSED ON REDUCED PRESSURE
2FWAV2FW005--M--	1.00E-02	3.06E-06	1.55E-09	1	1	FW MDRFP 2FW01PC FEED REG AOV 2FW005 MUA
2ARSVF400F401DCC	1.55E-05	2.87E-06	9.39E-07	1	1.19	CCFTC OF ARI VALVES 2C11-F400 & 2C11-F401
2ACHB-2411---D--	1.39E-04	2.28E-06	8.30E-08	1	1.02	4.16 kVAC CB 2AP03E-1 (2411) UAT 241 TO SWGR 241X FAILS TO OPEN
2ACHB-2415---K--	1.39E-04	2.28E-06	8.30E-08	1	1.02	4.16 kVAC CB 2AP04E-3 (2415) SWGR 241Y / 241X X-TIE FAILS TO CLOSE
2FWHU263-59A-H--	2.40E-03	2.23E-06	4.70E-09	1	1	PREINIT: MISCAL OF LI263-59A
2FWHU263-59B-H--	2.40E-03	2.23E-06	4.70E-09	1	1	PREINIT: MISCAL OF LI263-59B
2FWPM-AUX-OILA--	1.13E-03	2.11E-06	9.44E-09	1	1	FW TDRFPs AUXILIARY LUBE OIL PUMP 2TO11P FAILS TO START
%A-ADS	1.00E-05	0.00E+00	0.00E+00	1	1	INADVERTANT ADS
%A-CS	3.15E-06	0.00E+00	0.00E+00	1	1	LARGE LOCA IN LPCS LINE
%A-HP	3.64E-06	0.00E+00	0.00E+00	1	1	LARGE LOCA IN HPCS LINE
%A-LP	1.47E-05	0.00E+00	0.00E+00	1	1	LARGE LOCA IN LPCI LINE
%A-ST	2.29E-05	0.00E+00	0.00E+00	1	1	LARGE LOCA ABOVE TAF
%A-WA	7.52E-06	0.00E+00	0.00E+00	1	1	LARGE LOCA BELOW TAF
%BOC-FW	5.30E-09	0.00E+00	0.00E+00	1	1	BREAK OUTSIDE CONTAINMENT IN FW DISCHARGE LINE
%BOC-HP	1.00E-10	0.00E+00	0.00E+00	1	1	BREAK OUTSIDE CONTAINMENT IN HPCS LINE
%BOC-MS	5.95E-08	0.00E+00	0.00E+00	1	1	BREAK OUTSIDE CONTAINMENT IN MAIN STEAM LINE
%BOC-RC	1.70E-08	0.00E+00	0.00E+00	1	1	BREAK OUTSIDE CONTAINMENT IN RCIC DISCHARGE LINE
%BOC-RW	1.70E-08	0.00E+00	0.00E+00	1	1	BREAK OUTSIDE CONTAINMENT IN RWCU LINE
%FSAB1	3.79E-07	0.00E+00	0.00E+00	1	1	SW PIPE RUPTURE IN AUXILIARY BLDG.
%FSAB2	3.31E-05	0.00E+00	0.00E+00	1	1	FPS PIPE RUPTURE IN AUXILIARY BLDG.
%FSDG1	3.86E-07	0.00E+00	0.00E+00	1	1	CSCS PIPE RUPTURE IN DIV. 3 CSCS ROOM
%FSDG2	2.65E-05	0.00E+00	0.00E+00	1	1	FPS PIPE RUPTURE IN DIV. 3 CSCS ROOM

Table B-4

BASIC EVENT IMPORTANCE MEASURES FOR CDF ASSESSMENT FOR CUTSETS CONTRIBUTING TO ΔCDF

Event Name	Probability	Fus Ves	BirnBm	Red W	Ach W	Description
%FSRB1	2.57E-07	0.00E+00	0.00E+00	1	1	SW PIPE RUPTURE IN RB AREA 3E
%FSRB10	2.41E-07	0.00E+00	0.00E+00	1	1	DIV. 2 RHRSW PIPE RUPTURE IN U2 RHR B/C CORNER ROOM
%FSRB11	2.41E-07	0.00E+00	0.00E+00	1	1	DIV. 1 RHRSW PIPE RUPTURE IN U2 RHR A CORNER ROOM
%FSRB2	4.82E-07	0.00E+00	0.00E+00	1	1	SW PIPE RUPTURE IN RB AREA 3G
%FSRB3	2.09E-06	0.00E+00	0.00E+00	1	1	SW PIPE RUPTURE IN RB AREA 3B1, 3B2, 3C, 3D OR 3F
%FSRB4	1.24E-06	0.00E+00	0.00E+00	1	1	DGCW 0A PIPE RUPTURE IN U2 RACEWAY
%FSRB5	3.20E-06	0.00E+00	0.00E+00	1	1	DGCW 2A PIPE RUPTURE IN U2 RACEWAY
%FSRB6	4.01E-06	0.00E+00	0.00E+00	1	1	DGCW 2B PIPE RUPTURE IN U2 RACEWAY
%FSRB7	1.29E-07	0.00E+00	0.00E+00	1	1	DIV. 1 RHRSW PIPE RUPTURE IN U2 RACEWAY
%FSRB8	6.18E-07	0.00E+00	0.00E+00	1	1	DGCW 0A PIPE RUPTURE IN U2 LPCS/RCIC CORNER ROOM
%FSRB9	1.60E-06	0.00E+00	0.00E+00	1	1	DGCW 2A PIPE RUPTURE IN U2 RHR B/C CORNER ROOM
%FSTB1	3.21E-07	0.00E+00	0.00E+00	1	1	SW PIPE RUPTURE IN CONDENSER PIT
%FSTB10	1.44E-06	0.00E+00	0.00E+00	1	1	ISOLABLE SW PIPE RUPTURE OUTSIDE CONDENSER PIT
%FSTB11	8.01E-06	0.00E+00	0.00E+00	1	1	DGCW 2B PIPE RUPTURE IN TB BASEMENT
%FSTB2	9.94E-05	0.00E+00	0.00E+00	1	1	FPS PIPE RUPTURE IN TURBINE BLDG.
%FSTB3	1.84E-05	0.00E+00	0.00E+00	1	1	CW PIPE RUPTURE IN CONDENSER PIT
%FSTB4	2.66E-03	0.00E+00	0.00E+00	1	1	CW COMPONENT RUPTURE IN CONDENSER PIT
%FSTB5	3.01E-08	0.00E+00	0.00E+00	1	1	DEICING PIPE RUPTURE (UNIT 2)
%FSTB6	3.01E-08	0.00E+00	0.00E+00	1	1	DEICING PIPE RUPTURE (UNIT 1)
%FSTB7	1.96E-07	0.00E+00	0.00E+00	1	1	SW STANDPIPE RUPTURE OUTSIDE CONDENSER PIT
%FSTB8	1.96E-07	0.00E+00	0.00E+00	1	1	CW MANWAY RUPTURE OUTSIDE CONDENSER PIT
%FSTB9	2.89E-07	0.00E+00	0.00E+00	1	1	UNISOLABLE SW PIPE RUPTURE OUTSIDE CONDENSER PIT

Table B-4

BASIC EVENT IMPORTANCE MEASURES FOR CDF ASSESSMENT FOR CUTSETS CONTRIBUTING TO ΔCDF

Event Name	Probability	Fus Ves	BirnBm	Red W	Ach W	Description
%ISLOCA-LPCS	7.50E-09	0.00E+00	0.00E+00	1	1	LPCS INJECTION LINE ISLOCA
%ISLOCA-RHRA	7.50E-09	0.00E+00	0.00E+00	1	1	RHR A INJECTION LINE ISLOCA
%ISLOCA-RHRA-S	7.50E-09	0.00E+00	0.00E+00	1	1	RHR A SDC RETURN LINE ISLOCA
%ISLOCA-RHRB	7.50E-09	0.00E+00	0.00E+00	1	1	RHR B INJECTION LINE ISLOCA
%ISLOCA-RHRB-S	7.50E-09	0.00E+00	0.00E+00	1	1	RHR B SDC RETURN LINE ISLOCA
%ISLOCA-RHRC	7.50E-09	0.00E+00	0.00E+00	1	1	RHR C INJECTION LINE ISLOCA
%ISLOCA-SDC	3.80E-08	0.00E+00	0.00E+00	1	1	SDC SUCTION LINE ISLOCA
%R	1.00E-08	0.00E+00	0.00E+00	1	1	EXCESSIVE LARGE LOCA INITIATING EVENT
%S1-CS	2.18E-05	0.00E+00	0.00E+00	1	1	INIT: MEDIUM BREAK LOCA - ABOVE CORE IN LPCS LINE
%S1-HP	3.01E-05	0.00E+00	0.00E+00	1	1	INIT: MEDIUM BREAK LOCA - ABOVE CORE IN HPCS LINE
%S1-LP	1.62E-04	0.00E+00	0.00E+00	1	1	INIT: MEDIUM BREAK LOCA - BELOW CORE IN LPCI LINE
%S1-ST	3.09E-04	0.00E+00	0.00E+00	1	1	INIT: OTHER MEDIUM BREAK LOCA - ABOVE CORE
%S1-WA	9.37E-05	0.00E+00	0.00E+00	1	1	INIT: OTHER MEDIUM BREAK LOCA - BELOW CORE
%S2-WA	3.67E-03	0.00E+00	0.00E+00	1	1	INIT: SMALL BREAK LOCA - BELOW CORE INSIDE DRYWELL
%TAC241Y	6.55E-04	0.00E+00	0.00E+00	1	1	LOSS OF 4.16 kVAC BUS 241Y INITIATING EVENT
%TDCA	5.25E-04	0.00E+00	0.00E+00	1	1	LOSS OF 125 VDC BUS 2A INITIATING EVENT
%TDCAB	3.15E-07	0.00E+00	0.00E+00	1	1	LOSS OF 125 VDC BUS 2A AND 2B INITIATING EVENT
%TDCB	5.25E-04	0.00E+00	0.00E+00	1	1	LOSS OF 125 VDC BUS 2B INITIATING EVENT
0CWMVCW008OPEN--	1.25E-01	0.00E+00	0.00E+00	1	1	0CW-008 MOV OPEN AT TIME OF FLOOD
0WSXV-0WS004-K--	5.00E-04	0.00E+00	0.00E+00	1	1	0 SW STRAINER INLET VALVE 0WS004 FTC
1CWMV1CW006A-K--	1.80E-03	0.00E+00	0.00E+00	1	1	CW PUMP 1A DISCHARGE MOV 1CW006A FTC
1CWMV1CW006B-K--	1.80E-03	0.00E+00	0.00E+00	1	1	CW PUMP 1B DISCHARGE MOV 1CW006B FTC
1CWMV1CW006C-K--	1.80E-03	0.00E+00	0.00E+00	1	1	CW PUMP 1C DISCHARGE MOV 1CW006C FTC
1CWMV-1CW082-K--	1.00E-02	0.00E+00	0.00E+00	1	1	ARAMCO GATE 1CW082 FTC

Table B-4

BASIC EVENT IMPORTANCE MEASURES FOR CDF ASSESSMENT FOR CUTSETS CONTRIBUTING TO ΔCDF

Event Name	Probability	Fus Ves	BirnBm	Red W	Ach W	Description
1DGDG-DG1A---A--	2.98E-03	0.00E+00	0.00E+00	1	1	DG1A DIESEL GENERATOR 1DG01K FAILS TO START
1DGDG-DG1A---X--	9.24E-03	0.00E+00	0.00E+00	1	1	DG1A DIESEL GENERATOR 2DG01K FAILS TO RUN
1DGPMCS1DG01PA--	2.39E-03	0.00E+00	0.00E+00	1	1	DG1A COOLING WATER PUMP 1DG01P FAILS TO START
1DGPMCS1DG01PM--	3.25E-03	0.00E+00	0.00E+00	1	1	DG1A COOLING WATER PUMP 1DG01P MUA
1FPXV-1FP058-K--	5.00E-04	0.00E+00	0.00E+00	1	1	L.O. MANUAL VALVE 1FP058 FTC
1-PMP-RUNNING	5.10E-01	0.00E+00	0.00E+00	1	1	ONE WS PUMP NORMALLY RUNNING 561 DAYS PER 2 YEARS (WINTER)
1SAAV1SA004--F--	1.44E-03	0.00E+00	0.00E+00	1	1	SA COMPRESSOR 1SA01C SUCT AOV 1SA004 FAILS
1SACM1SA01C--M--	6.22E-02	0.00E+00	0.00E+00	1	1	SA COMPRESSOR 1SA01C TRAIN MUA
1SACM1SA01---X--	1.64E-03	0.00E+00	0.00E+00	1	1	SA COMPRESSOR 1SA01C FAILS TO RUN
1VDDMDG1V09YBD--	3.00E-03	0.00E+00	0.00E+00	1	1	VD DG1A ROOM VENT BAL DAMPER 1VD09YA FAILS TO OPEN
1VDDMDG1V11YBF--	3.00E-03	0.00E+00	0.00E+00	1	1	VD DG1A ROOM VENT OUTLET BAL DAMPER 1VD11Y FAILS TO OPERATE
1VDFNCS1VD03CM--	2.00E-03	0.00E+00	0.00E+00	1	1	VD DG1A ROOM COOLNG FAN 1VD03C MUA
1WSFL1WS01F--P--	2.40E-04	0.00E+00	0.00E+00	1	1	WS STRAINER 1WS01F FAILS DUE TO PLUGGING
1WSPM-1ASUMSB---	3.24E-01	0.00E+00	0.00E+00	1	1	WS PUMP 1WS01PA IS IN STANDBY (SUMMER)
1WSPM-1AWINSB---	7.74E-01	0.00E+00	0.00E+00	1	1	WS PUMP 1WS01PA IS IN STANDBY (WINTER)
1WSPM-1BSUMSB---	3.24E-01	0.00E+00	0.00E+00	1	1	WS PUMP 1WS01PB IS IN STANDBY (SUMMER)
1WSPM-1BWINSB---	7.74E-01	0.00E+00	0.00E+00	1	1	WS PUMP 1WS01PB IS IN STANDBY (WINTER)
1WSPMPSW1A---A--	1.13E-03	0.00E+00	0.00E+00	1	1	WS PUMP 1WS0P1A FAILS TO START
1WSPMPSW1A---M--	6.19E-03	0.00E+00	0.00E+00	1	1	WS PUMP 1WS01PA MUA
1WSPMPSW1A---X--	7.15E-04	0.00E+00	0.00E+00	1	1	WS PUMP 1WS01PA FAILS TO RUN
1WSPMPSW1B---A--	1.13E-03	0.00E+00	0.00E+00	1	1	WS PUMP 1WS01PB FAILS TO START
1WSPMPSW1B---M--	6.19E-03	0.00E+00	0.00E+00	1	1	WS PUMP 1WS01PB MUA
1WSPMPSW1B---X--	7.15E-04	0.00E+00	0.00E+00	1	1	WS PUMP 1WS01PB FAILS TO RUN

Table B-4

BASIC EVENT IMPORTANCE MEASURES FOR CDF ASSESSMENT FOR CUTSETS CONTRIBUTING TO ΔCDF

Event Name	Probability	Fus Ves	BirnBm	Red W	Ach W	Description
1WSXV-1WS004-K--	5.00E-04	0.00E+00	0.00E+00	1	1	U-1 SW STRAINER INLET VALVE 1WS004 FTC
1WSXV-2WS004-K--	5.00E-04	0.00E+00	0.00E+00	1	1	U-2 SW STRAINER INLET VALVE 2WS004 FTC
2ACBS-235X3--F--	4.80E-06	0.00E+00	0.00E+00	1	1	480 VAC MCC 235X-3 (2AP73E) FAILS
2ACBS-235X3--M--	3.19E-06	0.00E+00	0.00E+00	1	1	480 VAC MCC 235X-3 (2AP73E) MUA
2ACBS-235X---F--	4.80E-06	0.00E+00	0.00E+00	1	1	480 VAC SWGR 235X (2AP19E) FAILS
2ACBS-235X---M--	3.19E-06	0.00E+00	0.00E+00	1	1	480 VAC SWGR 235X (2AP19E) MUA
2ACBS-236X3B-F--	4.80E-06	0.00E+00	0.00E+00	1	1	480 VAC MCC 236X-3 (2AP81E) FAILS
2ACBS-236X3B-M--	3.19E-06	0.00E+00	0.00E+00	1	1	480 VAC MCC 236X-3 (2AP81E) MUA
2ACBS-236XB--F--	4.80E-06	0.00E+00	0.00E+00	1	1	480 VAC SWGR 236X (2AP21E) FAILS
2ACBS-236X---M--	3.19E-06	0.00E+00	0.00E+00	1	1	480 VAC SWGR 236X (2AP21E) MUA
2ACBS-241Y---F--	4.80E-06	0.00E+00	0.00E+00	1	1	4.16 kVAC SWGR 241Y (2AP04E) FAILS
2ACBS-241Y---M--	3.19E-06	0.00E+00	0.00E+00	1	1	4.16 kVAC SWGR 241Y (2AP04E) MUA
2ACBS-242Y---F--	4.80E-06	0.00E+00	0.00E+00	1	1	4.16 kVAC SWGR 242Y (2AP06E) FAILS
2ACBS-242Y---M--	3.19E-06	0.00E+00	0.00E+00	1	1	4.16 kVAC SWGR 242Y (2AP06E) MUA
2ACHB-2425---K--	1.39E-04	0.00E+00	0.00E+00	1	1	4.16 kVAC CB 2AP06E-4 (2425) SWGR 242Y / 242X X-TIE FAILS TO CLOSE
2ACHB242Y236-M--	2.90E-06	0.00E+00	0.00E+00	1	1	4.16 kVAC CB 2AP06E-5 SWGR 242Y TO 480 VAC SWGR 236X / 236Y MUA
2ACHB242Y236-U--	1.07E-05	0.00E+00	0.00E+00	1	1	4.16 kVAC CB 2AP06E-5 SWGR 242Y TO 480 VAC SWGR 236X / 236Y SPUR OPENS
2ACHB2AP04E4-M--	2.90E-06	0.00E+00	0.00E+00	1	1	4.16 kVAC CB 2AP04E-4 SWGR 241Y TO 480 VAC SWGR 235X / 235Y MUA
2ACHB2AP04E4-U--	1.07E-05	0.00E+00	0.00E+00	1	1	4.16 kVAC CB 2AP04E-4 SWGR 241Y TO 480 VAC SWGR 235X / 235Y SPUR OPENS
2ACMB236X303BM--	2.90E-06	0.00E+00	0.00E+00	1	1	480 VAC CB 2AP21E-303B SWGR 242Y XFMR OUT TO SWGR 236X MUA
2ACMB236X303BU--	2.54E-06	0.00E+00	0.00E+00	1	1	480 VAC CB 2AP21E-303B SWGR 242Y XFMR OUT TO 480 VAC 236X SPUR OPENS
2ACMB-236X-3-M--	2.90E-06	0.00E+00	0.00E+00	1	1	480 VAC CB 2AP21E-301B SWGR 236X TO MCC 236X-3 MUA

Table B-4

BASIC EVENT IMPORTANCE MEASURES FOR CDF ASSESSMENT FOR CUTSETS CONTRIBUTING TO ΔCDF

Event Name	Probability	Fus Ves	BirnBm	Red W	Ach W	Description
2ACMB-236X-3-U--	2.54E-06	0.00E+00	0.00E+00	1	1	480 VAC CB 2AP21E-301B SWGR 236X TO MCC 236X-3 SPUR OPENS
2ACMB2AP19E--M--	2.90E-06	0.00E+00	0.00E+00	1	1	480 VAC CB 2AP19E-102D SWGR 235X TO MCC 235X-3 MUA
2ACMB2AP19E--U--	2.54E-06	0.00E+00	0.00E+00	1	1	480 VAC CB 2AP19E-102D SWGR 235X TO MCC 235X-3 SPUR OPENS
2ACOP142-242-H--	6.50E-03	0.00E+00	0.00E+00	1	1	HEP: OP FAILS TO CROSS TIE UNIT 1 / UNIT 2 POWER PER LOA-AP-201
2ACOP-AC-CBS-H--	3.00E-03	0.00E+00	0.00E+00	1	1	OP FAILS TO LOCALLY CLOSE 4KV CB AFTER AC RECOVERY (LONG TERM SBO)
2ACOPDG0INTRLH--	3.90E-02	0.00E+00	0.00E+00	1	1	HEP: OP FAILS TO BYPASS DG0 OUTPUT BREAKER INTERLOCKS
2ACOP-OVRLD--H--	2.20E-02	0.00E+00	0.00E+00	1	1	HEP: OP FAILS TO PREVENT OVERLOAD OF DG FOR DLOOP
2ACSYLOOPLOCA---	2.40E-02	0.00E+00	0.00E+00	1	1	COND PROB OF A LOOP GIVEN A LOCA SIGNAL
2ACXHTR242---F--	2.66E-05	0.00E+00	0.00E+00	1	1	UNIT 2 STATION AUXILIARY XFMR (SAT) TR-242 (2AP91E) FAILS
2ACXM1ET235XXF--	1.68E-05	0.00E+00	0.00E+00	1	1	XFMR 2AP19E-103B 4.16 kVAC SWGR 241Y TO 480 VAC SWGR 235X FAILS
2ACXM1ET235YXF--	1.68E-05	0.00E+00	0.00E+00	1	1	XFMR 2AP20E-203B 4.16 kVAC SWGR 241Y TO 480 VAC SWGR 235Y FAILS
2ACXM1ET236XXF--	1.68E-05	0.00E+00	0.00E+00	1	1	XFMR 2AP21E-303B 4.16 kVAC SWGR 242Y TO 480 VAC SWGR 236X FAILS
2ACXM1ET236YXF--	1.68E-05	0.00E+00	0.00E+00	1	1	XFMR 2AP22E-403B 4.16 kVAC BUS 242Y TO 480 VAC BUS 236Y FAILS
2ADAS--F013--DCC	7.40E-05	0.00E+00	0.00E+00	1	1	CCFTO OF SIX OR MORE ADS VALVES
2AD--CTFAIL--F--	6.90E-03	0.00E+00	0.00E+00	1	1	ADS FAILS DUE TO STEAM RELEASE
2ADLS-N037C--F--	1.00E-03	0.00E+00	0.00E+00	1	1	RANDOM FAILURE OF LEVEL SENSOR B21-N037C
2ADOP-COND---H--	1.64E-01	0.00E+00	0.00E+00	1	1	COND PROB OF MODERATE DEPEND BETWEEN INJ INITIATION AND DEPRESS

Table B-4

BASIC EVENT IMPORTANCE MEASURES FOR CDF ASSESSMENT FOR CUTSETS CONTRIBUTING TO ΔCDF

Event Name	Probability	Fus Ves	BirnBm	Red W	Ach W	Description
2ADOP-INHIBITH--	2.50E-02	0.00E+00	0.00E+00	1	1	ADS ERRONEOUSLY INHIBITED FOR NON-ATWS SCENARIO
2ADOP-S1-ST--H--	8.90E-04	0.00E+00	0.00E+00	1	1	OP FAILS TO MANUALLY INITIATE RAPID DEPRESS (MED ST. LOCA)
2ADOP-S1-WA--H--	3.20E-02	0.00E+00	0.00E+00	1	1	OP FAILS TO MANUALLY INITIATE RAPID DEPRESS (MED WA. LOCA)
2ADOP-TRANS--H--	5.30E-04	0.00E+00	0.00E+00	1	1	OP FAILS TO MANUALLY INITIATE RAPID DEPRESS (TRANSIENT)
2ATHU-MISCAL-H--	8.00E-05	0.00E+00	0.00E+00	1	1	PRE-HEP: MISCAL. OF HI DOME PRESS TRANS 2B21-N401A B C AND D
2ATHU-PT401A-H--	2.40E-03	0.00E+00	0.00E+00	1	1	PRE-HEP: MISCAL. OF HI DOME PRESS TRANS 2B21-N401A
2ATHU-PT401B-H--	2.40E-03	0.00E+00	0.00E+00	1	1	PRE-HEP: MISCAL. OF HI DOME PRESSE TRANS 2B21-N401B
2ATHU-PT401C-H--	2.40E-03	0.00E+00	0.00E+00	1	1	PRE-HEP: MISCAL. OF HI DOME PRESSE TRANS 2B21-N401C
2ATHU-PT401D-H--	2.40E-03	0.00E+00	0.00E+00	1	1	PRE-HEP: MISCAL. OF HI DOME PRESS TRANS 2B21-N401D
2CD--2CD01AMS---	3.00E-02	0.00E+00	0.00E+00	1	1	COND PROBY MAN SHTDWN REQD FOR MAIN CONDENSER 2CD01A MAINT
2CD--LOFWCDS-F--	3.00E-03	0.00E+00	0.00E+00	1	1	PERCENT OF THE LOSS OF FEEDWATER EVENTS AFFECTING CONDENSATE
2CNFLIORV----PCC	1.00E-05	0.00E+00	0.00E+00	1	1	CCF (PLUGGING) OF ECCS SUCT STRAINERS (IORV/SORV, SLOCA, OR ATWS)
2CNFLMLLOCA--PCC	1.00E-04	0.00E+00	0.00E+00	1	1	CCF (PLUGGING) OF ECCS SUCT STRAINERS (LARGE/MEDIUM LOCA)
2CNFLNMLLOCA-PCC	1.00E-06	0.00E+00	0.00E+00	1	1	CCF (PLUGGING) OF ECCS SUCT STRAINERS (NON-LOCA / IORV / SORV)
2CN--LEAK-DWBF--	7.46E-02	0.00E+00	0.00E+00	1	1	DW BODY LEAK
2CN-LEAK-WWAF--	1.17E-01	0.00E+00	0.00E+00	1	1	WW AIRSPACE LEAK
2CN--RUPT-DWBF--	8.58E-02	0.00E+00	0.00E+00	1	1	DW BODY RUPTURE

Table B-4

BASIC EVENT IMPORTANCE MEASURES FOR CDF ASSESSMENT FOR CUTSETS CONTRIBUTING TO ΔCDF

Event Name	Probability	Fus Ves	BirnBm	Red W	Ach W	Description
2CN--RUPT-DWHF--	4.42E-02	0.00E+00	0.00E+00	1	1	DW HEAD RUPTURE
2CN--RUPT-WWAF--	1.11E-01	0.00E+00	0.00E+00	1	1	WW AIR SPACE RUPTURE
2CN--RUPT-WWWF--	1.83E-02	0.00E+00	0.00E+00	1	1	WW RUPTURE BELOW WATER LINE
2CRPM-A-STDBY---	4.93E-01	0.00E+00	0.00E+00	1	1	CRD PUMP 2C11-C001A IS IN STANDBY
2CRPM-B-STDBY---	4.93E-01	0.00E+00	0.00E+00	1	1	CRD PUMP 2C11-C001B IS IN STANDBY
2CR--VENT----F--	1.80E-01	0.00E+00	0.00E+00	1	1	COND PROB OF CRD FAILURE GIVEN STEAM RELEASE
2CVAV31343640DCC	2.55E-04	0.00E+00	0.00E+00	1	1	CCFTO OF TWO OR MORE PRI CONTAIN VENT PATH AOVs (BETA APPROACH)
2CVAVAOVQ031-F--	1.01E-02	0.00E+00	0.00E+00	1	1	VQ SUPPRESISON CHAMBER VENT / PURGE AOV 2VQ031 FAILS TO OPERATE
2CVAVAOVQ034-F--	1.01E-02	0.00E+00	0.00E+00	1	1	VQ DRYWELL VENT / PURGE AOV 2VQ034 FAILS TO OPERATE
2CVAVAOVQ036-F--	1.01E-02	0.00E+00	0.00E+00	1	1	VQ DRYWELL VENT / PURGE AOV 2VQ036 FAILS TO OPERATE
2CVAVAOVQ040-F--	1.01E-02	0.00E+00	0.00E+00	1	1	VQ SUPPRESISON CHAMBER VENT / PURGE AOV 2VQ040 FAILS TO OPERATE
2CVOP2INCHVNTH--	1.02E-01	0.00E+00	0.00E+00	1	1	HEP: OP FAILS TO OPEN 2-INCH VENT TO MAINTAIN LESS THAN HI DW PRESS SETPOINT
2CVOPVENT----H--	9.10E-03	0.00E+00	0.00E+00	1	1	HEP: OP FAILS TO VENT CONTAINMENT
2CVOP-VNTCNT-H--	7.98E-02	0.00E+00	0.00E+00	1	1	FAILURE TO CONTROL VENT WITH IN PROCEDURALIZED PRESS. BAND
2CVVT-VENT---M--	3.00E-03	0.00E+00	0.00E+00	1	1	VQ CONTAINMENT VENT / PURGE SYSTEM MUA
2CWDR-FLOOD--O--	1.00E-04	0.00E+00	0.00E+00	1	1	CONDENSER PIT FLOOD DOORS LEFT OPEN
2CWHU-CW031-2HCC	8.00E-05	0.00E+00	0.00E+00	1	1	MISCALIBRATION OF CONDENSER PIT FLOAT LEVEL SENSORS
2CWMV2CW006A-K--	1.80E-03	0.00E+00	0.00E+00	1	1	CW PUMP 2A DISCHARGE MOV 2CW006A FTC
2CWMV2CW006B-K--	1.80E-03	0.00E+00	0.00E+00	1	1	CW PUMP 2B DISCHARGE MOV 2CW006B FTC
2CWMV2CW006C-K--	1.80E-03	0.00E+00	0.00E+00	1	1	CW PUMP 2C DISCHARGE MOV 2CW006C FTC
2CWMV-2CW082-K--	1.00E-02	0.00E+00	0.00E+00	1	1	ARAMCO GATE 2CW082 FTC

Table B-4

BASIC EVENT IMPORTANCE MEASURES FOR CDF ASSESSMENT FOR CUTSETS CONTRIBUTING TO ΔCDF

Event Name	Probability	Fus Ves	BirnBm	Red W	Ach W	Description
2CWOPMANTRIP1H--	8.10E-04	0.00E+00	0.00E+00	1	1	HEP: OP Fails to Trip CW Pumps (Int. Time Frame)
2CWOPMANTRIP2H--	8.40E-01	0.00E+00	0.00E+00	1	1	HEP: Cond. Prob. Failure to Trip CW Pumps (Given Failure Earlier)
2CWPM2CW01PB-X--	4.15E-04	0.00E+00	0.00E+00	1	1	CW PUMP 2CW01PB FAILS TO RUN
2DCBC2D1-2D2-FCC	2.44E-07	0.00E+00	0.00E+00	1	1	CCF OF UNIT 2 DIV 1 AND UNIT 2 DIV 2 BATTERY CHARGERS
2DCBC2DC09E--F--	6.77E-05	0.00E+00	0.00E+00	1	1	125 VDC UNIT 2 DIV 1 MAIN BATTERY CHARGER 2DC09E FAILS
2DCBC2DC09E--M--	5.31E-04	0.00E+00	0.00E+00	1	1	125 VDC UNIT 2 DIV 1 MAIN BATTERY CHARGER 2DC09E MUA
2DCBC2DC17E--F--	6.77E-05	0.00E+00	0.00E+00	1	1	125 VDC UNIT 2 DIV 2 MAIN BATTERY CHARGER 2DC17E FAILS
2DCBC2DC17E--M--	5.31E-04	0.00E+00	0.00E+00	1	1	125 VDC UNIT 2 DIV 2 MAIN BATTERY CHARGER 2DC17E MUA
2DCBC--ALL5--FCC	1.03E-08	0.00E+00	0.00E+00	1	1	CCF OF ALL 5 UNIT 2 BATTERY CHARGERS
2DCBC-D122D1BFCC	9.39E-08	0.00E+00	0.00E+00	1	1	CCF OF DIV 1 & 2 MAIN AND DIV 1 BACKUP BATTERY CHARGERS
2DCBCD12-D12BFCC	3.02E-08	0.00E+00	0.00E+00	1	1	CCF OF DIV 1 & 2 MAIN AND DIV 1 & 2 BACKUP BATTERY CHARGERS
2DCBC-D12-D2BFCC	9.39E-08	0.00E+00	0.00E+00	1	1	CCF OF DIV 1 & 2 MAIN AND DIV 2 BACKUP BATTERY CHARGERS
2DCBS--211XA-F--	4.80E-06	0.00E+00	0.00E+00	1	1	125 VDC BUS 211X (2DC10E) FAILS
2DCBS--211YA-F--	4.80E-06	0.00E+00	0.00E+00	1	1	125 VDC BUS 211Y (2DC11E) FAILS
2DCBS--212X--F--	4.80E-06	0.00E+00	0.00E+00	1	1	125 VDC BUS 212X (2DC12E) FAILS
2DCBS-212Y---F--	4.80E-06	0.00E+00	0.00E+00	1	1	125 VDC BUS 212Y (2DC13E) FAILS
2DCBS2DC08E--F--	4.80E-06	0.00E+00	0.00E+00	1	1	125 VDC BUS 2A (2DC08E) FAILS
2DCBS2DC15E2BF--	4.80E-06	0.00E+00	0.00E+00	1	1	125 VDC BUS 2B (2DC15E) FAILS
2DCBSCOND213CF--	2.00E-01	0.00E+00	0.00E+00	1	1	COND PROB OF FAIL OF DIV 3 125 VDC BUS GIVEN LOSS OF DIVs 1 & 2 DC IE
2DCBY1EBAT2X-F--	2.40E-04	0.00E+00	0.00E+00	1	1	250 VAC BATTERY 2DC01E FAILS

Table B-4

BASIC EVENT IMPORTANCE MEASURES FOR CDF ASSESSMENT FOR CUTSETS CONTRIBUTING TO ΔCDF

Event Name	Probability	Fus Ves	BirnBm	Red W	Ach W	Description
2DCBY2DC07E--F--	2.40E-04	0.00E+00	0.00E+00	1	1	125 VDC DIV 1 BATTERY 2DC07E FAILS
2DCBY2DC14E--F--	2.40E-04	0.00E+00	0.00E+00	1	1	125 VDC DIV 2 BATTERY 2DC14E FAILS
2DCCB2DC08E3AU--	1.44E-05	0.00E+00	0.00E+00	1	1	125 VDC CB 2DC08E-3A DIV 1 BUS 2A TO BUS 211X SPUR OPENS
2DCCB2DC08E3BU--	1.44E-05	0.00E+00	0.00E+00	1	1	125 VDC CB 2DC08E-3B DIV 1 BUS 2A TO BUS 211Y SPUR OPENS
2DCCB2DC13E--U--	1.44E-05	0.00E+00	0.00E+00	1	1	125 VDC CB 2DC13E-CB2 212Y TO DIV 2 ADS PNL 2H13-P631 SPUR OPENS
2DCCB2DC15E3AU--	1.44E-05	0.00E+00	0.00E+00	1	1	125 VDC CB 2DC15E-3A FROM DIV 2 BUS 2B TO BUS 212X SPUR OPENS
2DCCB2DC15E3BU--	1.44E-05	0.00E+00	0.00E+00	1	1	125 VDC CB 2DC15E-3B FROM DIV 2 BUS 2B TO BUS 212Y SPUR OPENS
2DCOP-125-BU-H--	1.00E-01	0.00E+00	0.00E+00	1	1	HEP: OPS FAIL TO ALIGN BACKUP DIV 1 125 VDC BATTERY CHARGER 2DC23
2DCOPRCIC-LS-H--	4.00E-02	0.00E+00	0.00E+00	1	1	HEP: OP FAILS TO SHED 125 VDC NON-ESSENTIAL LOADS
2DCRX2A2A2B--H--	7.10E-01	0.00E+00	0.00E+00	1	1	HEP: OP FAILS TO RCVR BATT BUS 2A GIVEN LOSS OF BUS 2A AND 2B IE
2DCRX2B2A2B--H--	7.10E-01	0.00E+00	0.00E+00	1	1	HEP: OP FAILS TO RCVR BATT BUS 2B GIVEN LOSS OF BUS 2A AND 2B IE
2DGCVCSDGF002D--	2.00E-04	0.00E+00	0.00E+00	1	1	DG2A CLNG WTR PUMP 2DG01P DISCH CHECK VALVE 2DG002 FAILS TO OPEN
2DGDG-DG2A---A--	2.98E-03	0.00E+00	0.00E+00	1	1	DG2A DIESEL GENERATOR 2DG01K FAILS TO START
2DGDG-DG2A---M--	1.00E-02	0.00E+00	0.00E+00	1	1	DG2A DIESEL GENERATOR 2DG01K MUA
2DGDG-DG2A---X--	9.24E-03	0.00E+00	0.00E+00	1	1	DG2A DIESEL GENERATOR 2DG01K FAILS TO RUN
2DGDG-DG2B---A--	2.98E-03	0.00E+00	0.00E+00	1	1	DG2B DIESEL GENERATOR 2E22-S001 FAILS TO START
2DGDG-DG2B---M--	1.00E-02	0.00E+00	0.00E+00	1	1	DG2B DIESEL GENERATOR 2E22-S001 MUA
2DGDG-DG2B---X--	9.24E-03	0.00E+00	0.00E+00	1	1	DG2B DIESEL GENERATOR 2E22-S001 FAILS TO RUN

Table B-4

BASIC EVENT IMPORTANCE MEASURES FOR CDF ASSESSMENT FOR CUTSETS CONTRIBUTING TO ΔCDF

Event Name	Probability	Fus Ves	BirnBm	Red W	Ach W	Description
2DGFLCS2DG01FP--	6.00E-05	0.00E+00	0.00E+00	1	1	DG2A STRAINER 2DG01F PLUGS IN 24 HOURS WITHOUT BACKFLUSH
2DGFN-VY06C--F--	1.00E-04	0.00E+00	0.00E+00	1	1	ROOM COOLER FAN FAILS VY06C
2DGHB-2413---K--	2.19E-04	0.00E+00	0.00E+00	1	1	4.16 kVAC CB 2AP04E-10 (2413) DG0 TO SWGR 241Y FAILS TO CLOSE
2DGHUCS22D300H--	9.00E-05	0.00E+00	0.00E+00	1	1	PRE-HEP: OP FAILS TO RESTORE DG2B STRAINER 2E22-D300 AFTER MAINT
2DGHUCSDG2AFLH--	9.00E-05	0.00E+00	0.00E+00	1	1	PRE-HEP: OP FAILS TO RESTORE DG2A STRAINER 2DG001F AFTER MAINT
2DGMV-MOV-CLRF--	3.00E-03	0.00E+00	0.00E+00	1	1	ROOM COOLING MOV FAILS TO OPEN
2DGOP-DGCWP--H--	1.00E+00	0.00E+00	0.00E+00	1	1	MANUAL INITIATION FAILS
2DGPMCS22C002A--	2.39E-03	0.00E+00	0.00E+00	1	1	DG2B COOLING WATER PUMP 2E22-C002 FAILS TO START
2DGPMCS22C002M--	3.25E-03	0.00E+00	0.00E+00	1	1	DG2B COOLING WATER PUMP 2E22-C002 MUA
2DGPMCS22C002X--	1.94E-04	0.00E+00	0.00E+00	1	1	DG2B COOLING WATER PUMP 2E22-C002 FAILS TO RUN
2DGPMCS2DG01PA--	2.39E-03	0.00E+00	0.00E+00	1	1	DG2A COOLING WATER PUMP 2DG01P FAILS TO START
2DGPMCS2DG01PX--	1.94E-04	0.00E+00	0.00E+00	1	1	DG2A COOLING WATER PUMP 2DG01P FAILS TO RUN
2DGPMCSDG2A--M--	3.25E-03	0.00E+00	0.00E+00	1	1	DG2A COOLING WATER PUMP 2DG01P TRAIN MUA
2DGPMCSTRN0A-M--	3.25E-03	0.00E+00	0.00E+00	1	1	DG0 COOLING WATER PUMP 0DG01P TRAIN MUA
2DGPPABOVELAKE--	5.00E-01	0.00E+00	0.00E+00	1	1	PIPE BREAK ABOVE LAKE ELEVATION
2DGPPBELOWLAKE--	5.00E-01	0.00E+00	0.00E+00	1	1	PIPE BREAK BELOW LAKE ELEVATION
2DGPPNONISOLBL--	5.00E-01	0.00E+00	0.00E+00	1	1	BREAK LOCATION NOT ISOLABLE FROM DISCHARGE
2DGTE-LOGIC--F--	2.00E-03	0.00E+00	0.00E+00	1	1	AUTOMATIC LOGIC FOR ROOM COOLING FAILS
2DGXV2DG01A34KCC	5.00E-05	0.00E+00	0.00E+00	1	1	CCFTC OF L.O. MANUAL VALVES 2DG01A, 3 & 4
2DGXV2E22F315K--	5.00E-04	0.00E+00	0.00E+00	1	1	L.O. MANUAL VALVE 2E22-F315 FTC

Table B-4

BASIC EVENT IMPORTANCE MEASURES FOR CDF ASSESSMENT FOR CUTSETS CONTRIBUTING TO ΔCDF

Event Name	Probability	Fus Ves	BirnBm	Red W	Ach W	Description
2DGXVF3101112KCC	5.00E-05	0.00E+00	0.00E+00	1	1	CCFTC OF L.O. MANUAL VALVES 2E22-F310, F311 & F312
2FPOPALGNFPSAH--	6.07E-02	0.00E+00	0.00E+00	1	1	HEP: OP FAILS TO START / ALIGN FPS TO FW PER LGA-FP-01
2FPOPMANTRIP2H--	7.50E-03	0.00E+00	0.00E+00	1	1	HEP: OP Fails to Trip FPS for FPS Break (Int. Time Frame)
2FPOPMANTRIP3H--	1.30E-04	0.00E+00	0.00E+00	1	1	HEP: OP Fails to Trip FPS for FPS Break (Extended Time Frame)
2FPOPMANTRIP4H--	2.60E-04	0.00E+00	0.00E+00	1	1	HEP: Cond. Prob. Failure to Trip FPS for FPS Break (Given Failure in Short Term)
2FPOPMANTRIP5H--	1.80E-02	0.00E+00	0.00E+00	1	1	HEP: Cond. Prob. Failure to Trip FPS for FPS Break (Given Failure in Int. Term)
2FPPH-FLOWNA-F--	1.00E-02	0.00E+00	0.00E+00	1	1	FPS INADEQUATE FOR RPV INJECTION
2FPXV-2FP058-K--	5.00E-04	0.00E+00	0.00E+00	1	1	L.O. MANUAL VALVE 2FP058 FTC
2FWAV2FW005--F--	1.44E-03	0.00E+00	0.00E+00	1	1	FW MDRFP 2FW01PC FEED REG AOV 2FW005 FAILS TO OPERATE
2FW--CONDFT--F--	5.95E-02	0.00E+00	0.00E+00	1	1	COND PROB THAT INITIATING EVENT %TF FAILS MDFP (0.0357 / 0.6 = 0.0595)
2FWOPTDRFPS--H--	1.00E-02	0.00E+00	0.00E+00	1	1	HEP: OP FAILS TO TRIP BOTH TDRFPS OR MANUALLY START MDFWP
2FWPM-AUX-OILX--	5.35E-04	0.00E+00	0.00E+00	1	1	FW TDRFPs AUXILIARY LUBE OIL PUMP 2TO11P FAILS TO RUN
2FWPMMDRFP---M--	6.46E-03	0.00E+00	0.00E+00	1	1	FW MDRFP TRAIN MUA
2HCCV2E22F005D--	2.00E-04	0.00E+00	0.00E+00	1	1	HC INJECTION TESTABLE CHECK VALVE 2E22-F005 FAILS TO OPEN
2HCCV2E22F024D--	2.00E-04	0.00E+00	0.00E+00	1	1	HC PUMP 2E22-C001 DISCH CHECK VALVE 2E22-F024 FAILS TO OPEN
2HCFL2E22D302P--	2.40E-04	0.00E+00	0.00E+00	1	1	HC SP POOL SUCT STRAINER 2E22-D302 FAILS DUE TO PLUGGING
2HCHBHC001---K--	1.39E-04	0.00E+00	0.00E+00	1	1	4.16 kVAC CB 2AP07E-004 SWGR 243 TO HC PUMP 2E22-C001 FAILS TO CLOSE

Table B-4

BASIC EVENT IMPORTANCE MEASURES FOR CDF ASSESSMENT FOR CUTSETS CONTRIBUTING TO ΔCDF

Event Name	Probability	Fus Ves	BirnBm	Red W	Ach W	Description
2HCMV2E22F004D--	1.80E-03	0.00E+00	0.00E+00	1	1	HC INJECTION ISOL MOV 2E22-F004 FAILS TO OPEN
2HCMV-E22F012D--	1.80E-03	0.00E+00	0.00E+00	1	1	MIN FLOW VALVE FAILS CLOSED HPCS OVERHEATS & FAILS (MCFC) MO-F012
2HCPM2E22C001A--	5.12E-03	0.00E+00	0.00E+00	1	1	HC PUMP 2E22-C001 FAILS TO START
2HCPM2E22C001X--	1.20E-03	0.00E+00	0.00E+00	1	1	HC PUMP 2E22-C001 FAILS TO RUN
2HCPM-HPCS---M--	1.01E-02	0.00E+00	0.00E+00	1	1	HC SYSTEM (2E22-C001) MUA
2HCSYLEAKAGE-L--	9.00E-02	0.00E+00	0.00E+00	1	1	HC SYSTEM FAILS DUE TO EXCESSIVE LEAKAGE FOLLOWING WATER HAMMER
2HCSYOPERATE----	2.70E-03	0.00E+00	0.00E+00	1	1	HC IS IN OPERATION PRIOR TO A LOOP / DLOOP EVENT
2HCSYRUPTFLOOD--	1.00E-02	0.00E+00	0.00E+00	1	1	HC WATER HAMMER INDUCED RUPTURE CAUSES FLOODING
2HCSYSTART------	1.00E-03	0.00E+00	0.00E+00	1	1	HC IS PLACED INTO OPERATION FOLLOWING A TRANSIENT
2HC--VENT----F--	2.70E-02	0.00E+00	0.00E+00	1	1	COND PROB OF HPCS FAILURE GIVEN STEAM RELEASE
2HDOP-HD-ERLYH--	1.00E+00	0.00E+00	0.00E+00	1	1	HEP: OP FAILS TO ALIGN HEATER DRAIN SYS FOR ALT INJ (EARLY - WITHIN 2 HOURS)
2HDOP-HD-VENTH--	9.00E-01	0.00E+00	0.00E+00	1	1	VENTING CREATES ADVERSE ENV. CONDITIONS FOR ALIGNMENT OF HD
2HDOP-HTR-DRNH--	1.50E-01	0.00E+00	0.00E+00	1	1	HEP: OP FAILS TO ALIGN HEATER DRAIN SYSTEM FOR ALT INJ (DBA LOCA)
2IARXRCOVERIAH--	1.00E-01	0.00E+00	0.00E+00	1	1	HEP: OP FAILS TO RESTORE IA / SA FOR VENTING (NON LOOP OR DLOOP)
2LCCVLCSF003-D--	2.00E-04	0.00E+00	0.00E+00	1	1	LC PUMP 2E21-C001 DISCH CHECK VALVE 2E21-F003 FAILS TO OPEN
2LCCVLCSF006-D--	2.00E-04	0.00E+00	0.00E+00	1	1	LC INJECTION TESTABLE CHECK VALVE 2E21-F006 FAILS TO OPEN
2LCFLLCSD302-P--	2.40E-04	0.00E+00	0.00E+00	1	1	LC SUP POOL SUCT STRAINER 2E21-D302 FAILS DUE TO PLUGGING

Table B-4

BASIC EVENT IMPORTANCE MEASURES FOR CDF ASSESSMENT FOR CUTSETS CONTRIBUTING TO ΔCDF

Event Name	Probability	Fus Ves	BirnBm	Red W	Ach W	Description
2LC---LPCS---M--	4.09E-03	0.00E+00	0.00E+00	1	1	LC SYSTEM (2E21-C001) MUA
2LCMV2E21F005D--	1.80E-03	0.00E+00	0.00E+00	1	1	LC INJECTION ISOL MOV 2E21-F005 FAILS TO OPEN
2LCMV2E21F011D--	1.80E-03	0.00E+00	0.00E+00	1	1	LC MIN FLOW MOV 2E21-F011 FAILS TO OPEN
2LCPM2E21C001A--	1.44E-03	0.00E+00	0.00E+00	1	1	LC PUMP 2E21C001 FAILS TO START
2LCPM2E21C001X--	1.20E-03	0.00E+00	0.00E+00	1	1	LC PUMP 2E21-C001 FAILS TO RUN
2LCPSE21N413-F--	2.50E-04	0.00E+00	0.00E+00	1	1	PRESSURE SWITCH 2E21-N413 FAILS
2LCSYLEAKAGE-L--	9.00E-02	0.00E+00	0.00E+00	1	1	LPCS SYSTEM FAILS DUE TO EXCESSIVE LEAKAGE FOLLOWING WATER HAMMER
2LCSYOPERATE----	2.70E-03	0.00E+00	0.00E+00	1	1	LPCS IS IN OPERATION PRIOR TO A LOOP / DLOOP EVENT
2LCSYRUPTFLOOD--	1.00E-02	0.00E+00	0.00E+00	1	1	LPCS WATER HAMMER INDUCED RUPTURE CAUSES FLOODING
2LCSYSTART------	1.00E-03	0.00E+00	0.00E+00	1	1	LPCS IS PLACED INTO OPERATION FOLLOWING A TRANSIENT
2PLASNONTT---F--	4.50E-02	0.00E+00	0.00E+00	1	1	PROB OF SORV FOR NON-TT EVENTS
2PLSV-SRV-FTODCC	1.00E-06	0.00E+00	0.00E+00	1	1	CCFTO OF ALL SVs / SRVs FOR PRESSURE CONTROL
2-PMP-RUNNING	2.25E-01	0.00E+00	0.00E+00	1	1	TWO WS PUMPS NORMALLY RUNNING 80 DAYS PER 2 YEARS (SPR/FALL)
2RHCVRHRF31A-D--	2.00E-04	0.00E+00	0.00E+00	1	1	RH PUMP 2E12-C002A DISCH CHECK VALVE 2E12-F031A FAILS TO OPEN
2RHCVRHRF31B-D--	2.00E-04	0.00E+00	0.00E+00	1	1	RH PUMP 2E12-C002B DISCH CHECK VALVE 2E12-F031B FAILS TO OPEN
2RHFLE12D301AF--	2.40E-04	0.00E+00	0.00E+00	1	1	RH SUP POOL SUCT STRAINER 2E12-D301A FOR RHR PUMP A FAILS
2RHFLE12D301BF--	2.40E-04	0.00E+00	0.00E+00	1	1	RH SUP POOL SUCT STRAINER 2E12-D301B FOR RHR PUMP B FAILS
2RHHB241Y7---K--	1.39E-04	0.00E+00	0.00E+00	1	1	4.16 kVAC CB 2AP04E-7 SWGR 241Y TO RHR PUMP 2E12-C002A FAILS TO CLOSE

Table B-4

BASIC EVENT IMPORTANCE MEASURES FOR CDF ASSESSMENT FOR CUTSETS CONTRIBUTING TO ΔCDF

Event Name	Probability	Fus Ves	BirnBm	Red W	Ach W	Description
2RHHB242Y10--K--	1.39E-04	0.00E+00	0.00E+00	1	1	4.16 kVAC CB 2AP06E-10 SWGR 242Y TO RHR PUMP 2E12-C002B FAILS TO CLOSE
2RHHE-1A-1B--PCC	1.43E-06	0.00E+00	0.00E+00	1	1	RH HX 2E12-B001A AND 2E12-B001B FAIL DUE TO CCF (PLUGGING)
2RHHEE12B001BP--	2.40E-05	0.00E+00	0.00E+00	1	1	RH HX 2E12-B001B FAILS DUE TO PLUGGING
2RHHETRAINA--M--	7.20E-04	0.00E+00	0.00E+00	1	1	RH TRAIN A HX 2E12-B001A MUA
2RHHETRAINB--M--	7.20E-04	0.00E+00	0.00E+00	1	1	RH TRAIN B HX 2E12-B001B MUA
2RHHURHRF98A-H--	9.00E-05	0.00E+00	0.00E+00	1	1	PRE-HEP: OP FAILS TO RESTORE MANUAL VALVE 2E12-F098A AFTER MAINT
2RHHURHRF98B-H--	9.00E-05	0.00E+00	0.00E+00	1	1	PRE-HEP: OP FAILS TO RESTORE MANUAL VALVE 2E12-F098B AFTER MAINT
2RH--LOGIC---F--	2.63E-02	0.00E+00	0.00E+00	1	1	RHR SDC ISOL LOGIC FAILS (QUNAT NOS-PIP-LAK75X)
2RHMV-BREAK--F--	1.00E+00	0.00E+00	0.00E+00	1	1	MOV FAILS TO ISOLATE
2RHMV-F024AB-DCC	2.68E-05	0.00E+00	0.00E+00	1	1	CCFTO OF RHR SUP POOL RETURN VALVES 2E12-F024A & 2E12-F024B
2RHMVF024A---D--	1.80E-03	0.00E+00	0.00E+00	1	1	RH TRAIN A FULL FLOW TEST TO SUP POOL MOV 2E12-F024A FAILS TO OPEN
2RHMVF024B---D--	1.80E-03	0.00E+00	0.00E+00	1	1	RH TRAIN B FULL FLOW TEST TO SUP POOL MOV 2E12-F024B FAILS TO OPEN
2RHMV-F048AB-KCC	2.66E-05	0.00E+00	0.00E+00	1	1	CCFTC OF RHR HX BYPASS MOVs 2E12-F048A & 2E12-F048B
2RHMVF048A---K--	1.80E-03	0.00E+00	0.00E+00	1	1	RH HX 2E12-B001A BYPASS MOV 2E12-F048A FAILS TO CLOSE
2RHMVF048B---K--	1.80E-03	0.00E+00	0.00E+00	1	1	RH HX 2E12-B001B BYPASS MOV 2E12-F048B FAILS TO CLOSE
2RHMVF048B---M--	8.00E-04	0.00E+00	0.00E+00	1	1	RH HX 2E12-B001B BYPASS MOV 2E12-F048B MUA
2RHOP-F068B--H--	5.00E-01	0.00E+00	0.00E+00	1	1	CREW CLOSES HX DISCH VLV F068 AND PULLS CB W/VLV PARTIALLY OPEN (APPLIES TO A&B)
2RHOP-LOCA---H--	1.00E+00	0.00E+00	0.00E+00	1	1	HEP: OPS FAIL TO PRVNT RHR AUTO STRT WITH LOCA SIGNAL AT T=0 AND LOOP

Table B-4

BASIC EVENT IMPORTANCE MEASURES FOR CDF ASSESSMENT FOR CUTSETS CONTRIBUTING TO ΔCDF

Event Name	Probability	Fus Ves	BirnBm	Red W	Ach W	Description
2RHOP-NLOCA--H--	1.60E-03	0.00E+00	0.00E+00	1	1	HEP: OPS FAIL TO PREVENT RHR AUTO START WITHOUT LOCA SIGNAL AT T=0
2RHOP-RUNOUT-H--	3.40E-02	0.00E+00	0.00E+00	1	1	HEP: OP FAILS TO THROTTLE OPERAT RHRSW PUMP GIVEN FAIL OF PAIRED PUMP
2RHOPSPCINIT-H--	1.60E-04	0.00E+00	0.00E+00	1	1	HEP: OP FAILS TO MANUALLY INITIATE SPC & MANIPULATE VALVES
2RHOPSPCLATE-H--	1.31E-02	0.00E+00	0.00E+00	1	1	HEP: OP FAILS TO INITIATE SPC LATE GIVEN FAILURE TO INITIATE EARLY (COND PROB)
2RHOP-SPCVD--H--	9.20E-03	0.00E+00	0.00E+00	1	1	HEP: OP STARTS RHR WITHOUT FILL & VENT (REQUIRED AT > 4 HOURS)
2RHOP-TRIPLK-H--	6.20E-04	0.00E+00	0.00E+00	1	1	HEP: OP FAILS TO PREVENT LEAK INDUCED FLOOD BY TRIPPING ECCS PUMP
2RHOP-TRIPRP-H--	3.00E-01	0.00E+00	0.00E+00	1	1	HEP: OPS FAIL TO PREVENT RUPTURE INDUCED FLOOD BY TRIPPING ECCS PUMP
2RHPH-RHRA---F--	3.30E-01	0.00E+00	0.00E+00	1	1	CONDITIONAL PROBABILITY THAT LOCA IS IN RHR TRAIN A
2RHPH-RHRB---F--	3.30E-01	0.00E+00	0.00E+00	1	1	CONDITIONAL PROBABILITY THAT LOCA IS IN RHR TRAIN B
2RHPME12C002AA--	1.04E-03	0.00E+00	0.00E+00	1	1	RH PUMP 2E12-C002A FAILS TO START
2RHPME12C002AM--	5.11E-03	0.00E+00	0.00E+00	1	1	RH TRAIN 2A (2E12-C002A) MUA
2RHPME12C002AX--	2.37E-04	0.00E+00	0.00E+00	1	1	RH PUMP 2E12-C002A FAILS TO RUN
2RHPME12C002BA--	1.04E-03	0.00E+00	0.00E+00	1	1	RH PUMP 2E12-C002B FAILS TO START
2RHPME12C002BM--	5.11E-03	0.00E+00	0.00E+00	1	1	RH TRAIN 2B (2E12-C002B) MUA
2RHPME12C002BX--	2.37E-04	0.00E+00	0.00E+00	1	1	RH PUMP 2E12-C002B FAILS TO RUN
2RHPME12C002CM--	5.11E-03	0.00E+00	0.00E+00	1	1	RH TRAIN 2C (2E12-C002C) MUA
2RHPM-RHRAB--ACC	8.22E-06	0.00E+00	0.00E+00	1	1	CCFTS OF RHR PUMPS 2E12-C002A & 2E12-C002B
2RHPM-RHRABC-ACC	1.30E-05	0.00E+00	0.00E+00	1	1	CCFTS OF RHR PUMPS 2E12-C002A & 2E12-C002B & 2E12-C002C
2RHPM-RHRAB--XCC	3.93E-07	0.00E+00	0.00E+00	1	1	CCFTR OF RHR PUMPS 2E12-C002A & 2E12-C002B

Table B-4

BASIC EVENT IMPORTANCE MEASURES FOR CDF ASSESSMENT FOR CUTSETS CONTRIBUTING TO ΔCDF

Event Name	Probability	Fus Ves	BirnBm	Red W	Ach W	Description
2RHPPISLOCA--R--	1.00E+00	0.00E+00	0.00E+00	1	1	RH LOW PRESSURE PIPING RUPTURES DURING ISLOCA EVENT
2RHRXDHRRECLTH--	4.40E-01	0.00E+00	0.00E+00	1	1	FAIL TO RECOVERY DECAY HEAT REMOVAL LONG TERM
2RHSYARUPTFLOOD-	1.00E-02	0.00E+00	0.00E+00	1	1	RH TRAIN A WATER HAMMER INDUCED RUPTURE CAUSES FLOODING
2RHSY-DRAINSPF--	1.00E+00	0.00E+00	0.00E+00	1	1	DISCH LINE DRAINS TO SUPPRESSION POOL CREATING A VOID
2RHSYLEAKA---L--	9.00E-02	0.00E+00	0.00E+00	1	1	RH TRAIN A FAILS DUE TO EXCESSIVE LEAKAGE FOLLOWING WATER HAMMER
2RHSYLEAKB---L--	9.00E-02	0.00E+00	0.00E+00	1	1	RH TRAIN B FAILS DUE TO EXCESSIVE LEAKAGE FOLLOWING WATER HAMMER
2RHSYLEAKC---L--	9.00E-02	0.00E+00	0.00E+00	1	1	RH TRAIN C FAILS DUE TO EXCESSIVE LEAKAGE FOLLOWING WATER HAMMER
2RHSYOPERATEA---	2.50E-02	0.00E+00	0.00E+00	1	1	RH TRAIN A IS IN OPERATION PRIOR TO A LOOP / DLOOP EVENT
2RHSYOPERATEB---	2.50E-02	0.00E+00	0.00E+00	1	1	RH TRAIN B IS IN OPERATION PRIOR TO A LOOP / DLOOP EVENT
2RHSYOPERATEC---	2.70E-03	0.00E+00	0.00E+00	1	1	RH TRAIN C IS IN OPERATION PRIOR TO A LOOP / DLOOP EVENT
2RHSYRUPTUREBR--	1.00E-02	0.00E+00	0.00E+00	1	1	RH TRAIN B FAILS DUE TO RUPTURE FOLLOWING WATER HAMMER
2RHSYRUPTURECR--	1.00E-02	0.00E+00	0.00E+00	1	1	RH TRAIN C FAILS DUE TO RUPTURE FOLLOWING WATER HAMMER
2RHSYSTARTA-----	5.00E-01	0.00E+00	0.00E+00	1	1	RH TRAIN A IS PLACED INTO OPERATION FOLLOWING A TRANSIENT
2RHSYSTARTB-----	5.00E-01	0.00E+00	0.00E+00	1	1	RH TRAIN B IS PLACED INTO OPERATION FOLLOWING A TRANSIENT
2RHSYSTARTC-----	1.00E-03	0.00E+00	0.00E+00	1	1	RH TRAIN C IS PLACED INTO OPERATION FOLLOWING A TRANSIENT
2RHTS31N602B-F--	1.00E-04	0.00E+00	0.00E+00	1	1	RH TEMP SWITCH 2E31-N602B FAILS TO AN OPEN CIRCUIT

Table B-4

BASIC EVENT IMPORTANCE MEASURES FOR CDF ASSESSMENT FOR CUTSETS CONTRIBUTING TO ΔCDF

Event Name	Probability	Fus Ves	BirnBm	Red W	Ach W	Description
2RHTS31N603B-F--	1.00E-04	0.00E+00	0.00E+00	1	1	RH TEMP SWITCH 2E31-N603B FAILS TO AN OPEN CIRCUIT
2RHTS31N608BXF--	1.00E-04	0.00E+00	0.00E+00	1	1	RH ROOM TEMP SWITCH 2E31-N608B FAILS TO AN OPEN CIRCUIT
2RHTS31N608DXF--	1.00E-04	0.00E+00	0.00E+00	1	1	RH ROOM TEMP SWITCH 2E31-N608D FAILS TO AN OPEN CIRCUIT
2RHTS31N614BXF--	1.00E-04	0.00E+00	0.00E+00	1	1	RH ROOM TEMP SWITCH 2E31-N614B FAILS TO AN OPEN CIRCUIT
2RHTS31N614DXF--	1.00E-04	0.00E+00	0.00E+00	1	1	RH ROOM TEMP SWITCH 2E31-N614D FAILS TO AN OPEN CIRCUIT
2RICVRCIF040-D--	2.00E-04	0.00E+00	0.00E+00	1	1	RI EXHAUST CHECK VALVE 2E51-F040 FAILS TO OPEN
2RICVRCIF065-D--	2.00E-04	0.00E+00	0.00E+00	1	1	RI TESTABLE CHECK VALVE 2E51-F065 FAILS TO OPEN
2RICVRCIF066-D--	2.00E-04	0.00E+00	0.00E+00	1	1	RI TESTABLE CHECK VALVE 2E51-F066 FAILS TO OPEN
2RIHUF012F016H--	9.00E-05	0.00E+00	0.00E+00	1	1	PRE-HEP: RCIC PUMP ISO VALVES LOCKED CLOSED AFTER TEST OR MAINTENANCE
2RIMV-E51F019D--	1.80E-03	0.00E+00	0.00E+00	1	1	MIN FLOW VALVE FAILS CLOSED & FAILS (NCFC) MO-F019
2RIMV-E51F019K--	1.80E-03	0.00E+00	0.00E+00	1	1	MIN FLOW VALVE FAILS OPEN (NOFO) (FLOW DIVERSION) MO-F019
2RIMVRCIF013-D--	1.80E-03	0.00E+00	0.00E+00	1	1	RI INJECTION MOV 2E51-F013 FAILS TO OPEN
2RIMVRCIF045CD--	1.80E-03	0.00E+00	0.00E+00	1	1	RI STEAM SUPPLY MOV 2E51-F045 FAILS TO OPEN
2RIMVRCIF046CD--	1.80E-03	0.00E+00	0.00E+00	1	1	RI COOLING WATER SUPPLY MOV 2E51-F046 FAILS TO OPEN
2RIPS31N013A-F--	2.50E-04	0.00E+00	0.00E+00	1	1	RI DIFF PRESS SWITCH 31N013A FAILS TO AN OPEN CIRCUIT
2RIPS31N013B-F--	2.50E-04	0.00E+00	0.00E+00	1	1	RI DIFF PRESS SWITCH 31N013B FAILS TO AN OPEN CIRCUIT

Table B-4

BASIC EVENT IMPORTANCE MEASURES FOR CDF ASSESSMENT FOR CUTSETS CONTRIBUTING TO ΔCDF

Event Name	Probability	Fus Ves	BirnBm	Red W	Ach W	Description
2RIPT2E51C002A--	2.07E-02	0.00E+00	0.00E+00	1	1	RI TURBINE DRIVEN PUMP 2E51-C001 FAILS TO START
2RIPT2E51C002X--	2.14E-02	0.00E+00	0.00E+00	1	1	RI TURBINE DRIVEN PUMP 2E51-C001 FAILS TO RUN
2RIPT-RCIC---M--	5.48E-04	0.00E+00	0.00E+00	1	1	RI TURBINE DRIVEN PUMP 2E51-C001 MUA
2RISV-TTV----F--	5.00E-04	0.00E+00	0.00E+00	1	1	RCIC TURBINE TRIP & THROTTLE VALVE FAILS CLOSED 2E51-F360
2RITS31N612B-F--	1.00E-04	0.00E+00	0.00E+00	1	1	RI PIPE ROUTING TEMPERATURE SWITCH 31N612B FAILS TO AN OPEN CIRCUIT
2RITS31N613B-F--	1.00E-04	0.00E+00	0.00E+00	1	1	RI PIPE ROUTING TEMPERATURE SWITCH 31N613B FAILS TO AN OPEN CIRCUIT
2RP--EXLOCAATR--	7.00E-01	0.00E+00	0.00E+00	1	1	RPV RUPTURE ABOVE TAF (EXCESSIVE LOCA EVENT)
2RP--EXLOCABTR--	3.00E-01	0.00E+00	0.00E+00	1	1	RPV RUPTURE BELOW TAF (EXCESSIVE LOCA EVENT)
2RSCVCSCF028-D--	2.00E-04	0.00E+00	0.00E+00	1	1	DG2B CLNG PUMP DISCH CHECK VALVE 2E22-F028 FAILS TO OPEN
2RSFL-2STRNS-PCC	7.47E-06	0.00E+00	0.00E+00	1	1	CCF OF RHR SW STRAINERS 2E12-D300A & 2E12-D300B (PLUGGING)
2RSFLCS2D300AF--	2.40E-04	0.00E+00	0.00E+00	1	1	RHR SW TRAIN A STRAINER 2E12-D300A FAILS
2RSFLCS2D300BM--	7.20E-04	0.00E+00	0.00E+00	1	1	RHR SW TRAIN B STRAINER 2E12-D300B MUA
2RSFLCS2D300BP--	2.40E-04	0.00E+00	0.00E+00	1	1	RHR SW TRAIN B STRAINER 2E12-D300B FAILS DUE TO PLUGGING
2RSFLCS4HRSA-P--	2.40E-04	0.00E+00	0.00E+00	1	1	RHR SW TRAIN A STRAINER 2E12-D300A PLUGGED FOR 4 HOURS (FROM: CSCD300A-PLG-T)
2RSFLCS4HRSB-P--	2.40E-04	0.00E+00	0.00E+00	1	1	RHR SW TRAIN B STRAINER 2E12-D300B PLUGGED FOR 4 HOURS (FROM: CSCD300B-PLG-T)
2RSHUCSCD300BH--	9.00E-05	0.00E+00	0.00E+00	1	1	PRE-HEP: OP FAILS TO RESTORE STRAINER 2E12-D300B AFTER MAINT
2RSHUCSRSTRE-H--	9.00E-05	0.00E+00	0.00E+00	1	1	PRE-HEP: OP FAILS TO RESTORE RHR SW STRAINERS AFTER MAINTENANCE

Table B-4

BASIC EVENT IMPORTANCE MEASURES FOR CDF ASSESSMENT FOR CUTSETS CONTRIBUTING TO ΔCDF

Event Name	Probability	Fus Ves	BirnBm	Red W	Ach W	Description
2RSHU-RHRSWABH--	9.00E-05	0.00E+00	0.00E+00	1	1	PRE-HEP: OP MISALIGNS RHR SW TRAIN A
2RSHU-RHRSWCDH--	9.00E-05	0.00E+00	0.00E+00	1	1	PRE-HEP: OP MISALIGNS RHR SW TRAIN B
2RSMVCSCF068AD--	1.80E-03	0.00E+00	0.00E+00	1	1	RHR SW MOV 2E12-F068A FAILS TO OPEN (NC / FC)
2RSMVCSCF068BD--	1.80E-03	0.00E+00	0.00E+00	1	1	RHR SW MOV 2E12-F068B FAILS TO OPEN (NC / FC)
2RSMVCSCF068BM--	8.00E-04	0.00E+00	0.00E+00	1	1	RHR SW MOV 2E12-F068B MUA
2RSMV-F068AB-DCC	6.39E-05	0.00E+00	0.00E+00	1	1	CCFTO OF CSCS HX DISCH VALVES
2RSMV-F068A--K--	1.80E-03	0.00E+00	0.00E+00	1	1	MOV F068A FTC
2RSOPMVF068-3H--	1.50E-03	0.00E+00	0.00E+00	1	1	HEP: OP Fails to Close MOV F068A/B For RHRSW Break in RB (Long Term)
2RSPM-ABCD---ACC	4.04E-06	0.00E+00	0.00E+00	1	1	CCFTS OF RHR SW PUMPS 2E12-C300A & 2E12-C300B & 2E12-C300C & 2E12-C300D
2RSPM-ABCD---XCC	1.88E-06	0.00E+00	0.00E+00	1	1	CCFTR OF RHR SW PUMPS 2E12-C300A & 2E12-C300B & 2E12-C300C & 2E12-C300D
2RSPM-AC-----ACC	1.66E-05	0.00E+00	0.00E+00	1	1	CCFTS OF RHR SW PUMPS 2E12-C300A & 2E12-C300C
2RSPM-AD-----ACC	1.66E-05	0.00E+00	0.00E+00	1	1	CCFTS OF RHR SW PUMPS 2E12-C300A & 2E12-C300D
2RSPM-BC-----ACC	1.66E-05	0.00E+00	0.00E+00	1	1	CCFTS OF RHR SW PUMPS 2E12-C300B & 2E12-C300C
2RSPM-BD-----ACC	1.66E-05	0.00E+00	0.00E+00	1	1	CCFTS OF RHR SW PUMPS 2E12-C300B & 2E12-C300D
2RSPMCS2C300AA--	2.15E-03	0.00E+00	0.00E+00	1	1	RHR SW TRAIN A PUMP 2E12-C300A FAILS TO START
2RSPMCS2C300AM--	2.67E-03	0.00E+00	0.00E+00	1	1	RHR SW TRAIN A PUMP 2E12-C300A MUA
2RSPMCS2C300BA--	2.15E-03	0.00E+00	0.00E+00	1	1	RHR SW TRAIN B PUMP 2E12-C300B FAILS TO START
2RSPMCS2C300BM--	2.67E-03	0.00E+00	0.00E+00	1	1	RHR SW TRAIN B PUMP 2E12C-300B MUA
2RSPMCS2C300CA--	2.15E-03	0.00E+00	0.00E+00	1	1	RHR SW TRAIN C PUMP 2E12-C300C FAILS TO START

Table B-4

BASIC EVENT IMPORTANCE MEASURES FOR CDF ASSESSMENT FOR CUTSETS CONTRIBUTING TO ΔCDF

Event Name	Probability	Fus Ves	BirnBm	Red W	Ach W	Description
2RSPMCS2C300CM--	2.67E-03	0.00E+00	0.00E+00	1	1	RHR SW TRAIN C PUMP 2E12-C300C MUA
2RSPMCS2C300DA--	2.15E-03	0.00E+00	0.00E+00	1	1	RHR SW TRAIN D PUMP 2E12-C300D FAILS TO START
2RSPMCS2C300DM--	2.67E-03	0.00E+00	0.00E+00	1	1	RHR SW TRAIN D PUMP 2E12-C300D MUA
2RSPPABOVELAKE--	5.00E-01	0.00E+00	0.00E+00	1	1	PIPE BREAK ABOVE LAKE ELEVATION
2RSPPBELOWLAKE--	5.00E-01	0.00E+00	0.00E+00	1	1	PIPE BREAK BELOW LAKE ELEVATION
2RSXV330-332-KCC	5.00E-05	0.00E+00	0.00E+00	1	1	CCFTC OF MULTIPLE RHRSW PMP MANUAL ISOLATION VALVES
2RTHBRPTB03AAD--	1.39E-04	0.00E+00	0.00E+00	1	1	6.9 kVAC CB 2AP01E1-4 SWGR 251 TO RFP 2B33-C001A FAILS TO OPEN
2RTHBRPTB03BBD--	1.39E-04	0.00E+00	0.00E+00	1	1	6.9 kVAC CB 2AP02E1-4 SWGR 252 TO RFP 2B33-C001B FAILS TO OPEN
2--RX-ADFWM--H--	2.70E-04	0.00E+00	0.00E+00	1	1	DEP-HEP: 2ADOP-DEP-ADSH-- 2FWOPMOV10AB-H--
2--RX-AD-TD--H--	2.70E-04	0.00E+00	0.00E+00	1	1	DEP-HEP: 2ADOP-DEP-ADSH-- 2FWOPTDRFPS--H--
2--RXCVDFPRLFH--	5.00E-07	0.00E+00	0.00E+00	1	1	2CVOPVENT----H-- BFPOP-DFPENV-H-- 2RHOPSPCINIT-H-- 2RHOPSPCLATE-H-- 2FWOPMOV10AB
2--RXCVDFPRL-H--	5.00E-07	0.00E+00	0.00E+00	1	1	DEP-HEP: 2CVOPVENT----H-- BFPOP-DFPENV-H-- 2RHOPSPCINIT-H-- 2RHOPSPCLATE-H--
2--RXCVDFPRLTH--	5.00E-07	0.00E+00	0.00E+00	1	1	2CVOPVENT----H-- BFPOP-DFPENV-H-- 2RHOPSPCINIT-H-- 2RHOPSPCLATE-H-- 2FWOPTDRFPS-
2--RXCVFPRHILH--	5.00E-07	0.00E+00	0.00E+00	1	1	DEP-HEP: OP FAILS TO INITIATE SPC PC VENT AND FPS
2--RXCVFPRHITH--	5.00E-07	0.00E+00	0.00E+00	1	1	2CVOPVENT----H-- 2FPOPALGNFPSAH-- 2RHOPSPCINIT-H-- 2RHOPSPCLATE-H-- 2FWOPTDRFPS-
2--RXCVFPRHLFH--	5.00E-07	0.00E+00	0.00E+00	1	1	2CVOPVENT----H-- 2FPOPALGNFPSAH-- 2RHOPSPCINIT-H-- 2RHOPSPCLATE-H-- 2FWOPMOV10AB

Table B-4

BASIC EVENT IMPORTANCE MEASURES FOR CDF ASSESSMENT FOR CUTSETS CONTRIBUTING TO ΔCDF

Event Name	Probability	Fus Ves	BirnBm	Red W	Ach W	Description
2--RX-CVRHIL-H--	5.00E-07	0.00E+00	0.00E+00	1	1	DEP-HEP: 2RHOPSPCINIT-H-- & 2RHOPSPCLATE-H-- & 2CVOPVENT----H--
2--RXDC-DGCB-H--	6.90E-03	0.00E+00	0.00E+00	1	1	DEP HEP: 2DCOPRCIC-LS-H-- and 2ACOPDG0INTRLH--
2--RXDC-DGOVRH--	3.89E-03	0.00E+00	0.00E+00	1	1	DEP HEP: 2DCOPRCIC-LS-H-- and 2ACOP-OVRLD--H--
2--RXDFPRHIL-H--	1.00E-06	0.00E+00	0.00E+00	1	1	DEP-HEP: BFPOP-DFPENV-H-- & 2RHOPSPCINIT-H-- & 2RHOPSPCLATE-H--
2--RXDFPRHL1WH--	1.00E-06	0.00E+00	0.00E+00	1	1	DEP-HEP: BFPOP-DFPENV1H-- 2RHOPSPCINIT-H-- 2RHOPSPCLATE-H-- BWSOPSTNDBY--H--
2--RXFLDISOL1H--	5.27E-04	0.00E+00	0.00E+00	1	1	DEP HEP: 2WSOP-TB-VLV-H-- and 2SYOPISOLAKE2H--
2--RXFLDISOL3H--	1.03E-04	0.00E+00	0.00E+00	1	1	DEP HEP: 2CWOP-CW007-1H-- 2CWOP-CW007-2H-- 2WSOPMANTRIP4H-- 2WSOPMANTRIP6H--
2--RX-FPRHIL-H--	5.00E-07	0.00E+00	0.00E+00	1	1	DEP-HEP: OP FAILS TO INITIATE FPS AND SPC
2--RXFPSFWFWQH--	9.76E-04	0.00E+00	0.00E+00	1	1	DEP-HEP: OP FAILS TO INIT FPS CLS FW MOVs 10A/B (EARLY) AND CLS 10A/B (LATE)
2--RX-FPS-HTRH--	3.00E-02	0.00E+00	0.00E+00	1	1	DEP-HEP: OP FAILS TO INIT BOTH FPS AND HEATER DRAIN
2--RXINHBADS1H--	8.69E-05	0.00E+00	0.00E+00	1	1	DEP-HEP: 2ADOP-INHIBITH-- and 2ADOP-TRANS--H--
2--RXINHBADS2H--	6.07E-04	0.00E+00	0.00E+00	1	1	DEP HEP: 2ADOP-INHIBITH-- and 2ADOPIORVSORVH--
2--RXINHBADS3H--	1.46E-04	0.00E+00	0.00E+00	1	1	DEP HEP: 2ADOP-INHIBITH-- and 2ADOP-S1-ST--H--
2--RXINHBADS4H--	4.25E-03	0.00E+00	0.00E+00	1	1	DEP HEP: 2ADOP-INHIBITH-- and 2ADOP-S1-WA--H--
2--RXINHBADS6H--	1.97E-03	0.00E+00	0.00E+00	1	1	DEP HEP: 2ADOP-INHIBITH-- and 2ADOP-S2-WA--H--
2--RXPCV-FPS-H--	7.65E-03	0.00E+00	0.00E+00	1	1	DEP HEP: 2CVOP-VNTCNT-H-- and 2FPOPALGNFPSAH--

Table B-4

BASIC EVENT IMPORTANCE MEASURES FOR CDF ASSESSMENT FOR CUTSETS CONTRIBUTING TO ΔCDF

Event Name	Probability	Fus Ves	BirnBm	Red W	Ach W	Description
2--RX-SDC-PCVH--	2.40E-04	0.00E+00	0.00E+00	1	1	DEP-HEP: OP FAILS TO INIT BOTH SDC AND PRIMARY CONTAINMENT VENT
2--RX-SPC-PCVH--	5.00E-07	0.00E+00	0.00E+00	1	1	DEP-HEP: OP FAILS TO INIT BOTH SPC AND PCV
2SAAV0SA004--F--	1.44E-03	0.00E+00	0.00E+00	1	1	SA COMPRESSOR 0SA01C SUCT AOV 0SA004 FAILS TO OPERATE
2SYDGCW0ACW2AM--	2.30E-05	0.00E+00	0.00E+00	1	1	DGCWP0A AND DGCWP2A IN COINCIDENT MAINTENANCE
2SYDGCW0ARHRBM--	2.30E-05	0.00E+00	0.00E+00	1	1	DGCWP0A AND RHR B IN COINCIDENT MAINTENANCE
2SYDGCW0ARSW2M--	2.30E-05	0.00E+00	0.00E+00	1	1	DGCWP0A AND RHRSW DIV 2 IN COINCIDENT MAINTENANCE
2SYDGCW2ARHRAM--	2.30E-05	0.00E+00	0.00E+00	1	1	DGCWP2A AND RHR A IN COINCIDENT MAINTENANCE
2SYDGCW2ARSW1M--	2.30E-05	0.00E+00	0.00E+00	1	1	RHRSW DIV 1 AND DGCWP2A IN COINCIDENT MAINTENANCE
2SYDGCW2ARSW2M--	2.30E-05	0.00E+00	0.00E+00	1	1	DGCWP2A AND RHRSW DIV 2 IN COINCIDENT MAINTENANCE
2SYDG-DG0HPCSM--	2.30E-05	0.00E+00	0.00E+00	1	1	DG0 AND HPCS IN COINCIDENT MAINTENANCE
2SYDG-DG0LPRIM--	4.99E-04	0.00E+00	0.00E+00	1	1	DG 0, LPCS, AND RCIC IN COINCIDENT MAINTENANCE
2SYDG-DG0RCICM--	4.99E-04	0.00E+00	0.00E+00	1	1	RCIC AND DG 0 IN COINCIDENT MAINTENANCE
2SYDG-DG0-RHBM--	2.30E-05	0.00E+00	0.00E+00	1	1	RHR B AND DG 0 IN COINCIDENT MAINTENANCE
2SYDG-DG0RHRAM--	1.03E-04	0.00E+00	0.00E+00	1	1	RHR A AND DG 0 IN COINCIDENT MAINTENANCE
2SYDGDGCW0AHPM--	2.30E-05	0.00E+00	0.00E+00	1	1	DGCWP0A AND HPCS IN COINCIDENT MAINTENANCE
2SYDGDGCW2AHPM--	2.30E-05	0.00E+00	0.00E+00	1	1	DGCWP2A AND HPCS IN COINCIDENT MAINTENANCE
2SYDG-RSW2DG0M--	2.30E-05	0.00E+00	0.00E+00	1	1	RHRSW DIV 2 AND DG 0 IN COINCIDENT MAINTENANCE
2SYDPDGB-VLV3H--	1.20E-03	0.00E+00	0.00E+00	1	1	OP FAILS TO CLOSE LOCAL ISOLATION VALVE IN CSCS ROOM

Table B-4

BASIC EVENT IMPORTANCE MEASURES FOR CDF ASSESSMENT FOR CUTSETS CONTRIBUTING TO ΔCDF

Event Name	Probability	Fus Ves	BirnBm	Red W	Ach W	Description
2SYOPALLCSCS2H--	1.80E-03	0.00E+00	0.00E+00	1	1	HEP: OP Fails to Trip All Site CSCS Trains Given CSCS Break (Long Term)
2SYOPDGB-VLV1H--	1.00E+00	0.00E+00	0.00E+00	1	1	HEP: OP Fails to Close Local Isolation Vlv in CSCS RM Given Break (Short Term)
2SYOPDGB-VLV2H--	1.00E+00	0.00E+00	0.00E+00	1	1	HEP: OP Fails to Close Local Isolation Vlv in CSCS Rm Given Break (Short Term)
2SYOPDGB-VLV3H--	1.90E-03	0.00E+00	0.00E+00	1	1	HEP: OP Fails to Close Local Isolation Vlv in CSCS Rm Given Break (Long Term)
2SYOPDGB-VLV4H--	8.90E-04	0.00E+00	0.00E+00	1	1	HEP: OP Fails to Locally Close Isol. Vlv in CSCS Rm Given Break (Extend Time)
2SYOPDGB-VLV5H--	1.90E-03	0.00E+00	0.00E+00	1	1	HEP: Cond. Prob. Failure to Close Local Vlv in CSCS Rm (Given Short Term Fails)
2SYOPDGB-VLV6H--	1.90E-03	0.00E+00	0.00E+00	1	1	HEP: Cond. Prob. Failure to Close Local Vlv in CSCS Rm (Given Short Term Fails)
2SYOPISOLAKE1H--	5.00E-01	0.00E+00	0.00E+00	1	1	HEP: OP Fails to Isolate TB CW/SW from Lake (Int. Time Frame)
2SYOPISOLAKE2H--	1.00E-01	0.00E+00	0.00E+00	1	1	HEP: OP Fails to Isolate TB CW/SW from Lake (Extended Time Frame)
2SYOPISOLBRK-H--	5.00E-02	0.00E+00	0.00E+00	1	1	HEP: OP SUCCESSFULLY ISOLATES ISLOCA
2SYOP-MANSML-H--	2.10E-03	0.00E+00	0.00E+00	1	1	MANUAL ECCS INITIATION WITH A MEDIUM STEAM LOCA
2SYOP-MAN-TR-H--	1.30E-03	0.00E+00	0.00E+00	1	1	MANUAL ECCS INITIATION WITH A TRANSIENT
2SYOP-MANWML-H-	1.18E-01	0.00E+00	0.00E+00	1	1	MANUAL ECCS INITIATION WITH A MEDIUM WATER LOCA
2SYOP-RB-VLV2H--	1.70E-03	0.00E+00	0.00E+00	1	1	HEP: OP Fails to Close Local Isolation Valve in RB Given Pipe Break (Long Term)
2SYOP-RB-VLV3H--	1.40E-03	0.00E+00	0.00E+00	1	1	HEP: OP Fails to Close Local Valve in RB Given Pipe Break (Extended Time Frame)
2SYOPTRPCSCS1H--	1.00E+00	0.00E+00	0.00E+00	1	1	HEP: OP Fails to Trip Affected CSCS Pump Train for Break in RB (Short Term)

Table B-4

BASIC EVENT IMPORTANCE MEASURES FOR CDF ASSESSMENT FOR CUTSETS CONTRIBUTING TO ΔCDF

Event Name	Probability	Fus Ves	BirnBm	Red W	Ach W	Description
2SYOPTRPCSCS2H--	9.40E-04	0.00E+00	0.00E+00	1	1	HEP: OP Fails to Trip Affected CSCS Pump Train for Break in RB (Long Term)
2SYOPTRPCSCS3H--	9.40E-04	0.00E+00	0.00E+00	1	1	HEP: Cond. Prob. Failure to Trip CSCS Train (Given Failure in Short Term)
2SYPMHPCSLPCSACC	1.57E-04	0.00E+00	0.00E+00	1	1	CCFTS OF LPCS AND HPCS PUMPS
2SYPMRCICHPCSM--	2.30E-05	0.00E+00	0.00E+00	1	1	RCIC AND HPCS IN COINCIDENT MAINTENANCE
2SYPMRCICLPCSM--	3.85E-04	0.00E+00	0.00E+00	1	1	RCIC AND LPCS IN COINCIDENT MAINTENANCE
2SYPM-RHRA-B-M--	2.30E-05	0.00E+00	0.00E+00	1	1	RHR A AND RHR B IN COINCIDENT MAINTENANCE
2SYPMRHRAHPCSM--	2.30E-05	0.00E+00	0.00E+00	1	1	RHR A AND HPCS IN COINCIDENT MAINTENANCE
2SYPMRHRALPCSM--	1.97E-04	0.00E+00	0.00E+00	1	1	RHR A AND LPCS IN COINCIDENT MAINTENANCE
2SYPMRHRALPRIM--	5.53E-04	0.00E+00	0.00E+00	1	1	RHR A, LPCS, AND RCIC IN COINCIDENT MAINTENANCE
2SYPM-RHRB-C-M--	1.66E-03	0.00E+00	0.00E+00	1	1	RHR B AND RHR C IN COINCIDENT MAINTENANCE
2SYPMRHRBHPCSM--	2.30E-05	0.00E+00	0.00E+00	1	1	RHR B AND HPCS IN COINCIDENT MAINTENANCE
2SYPMRHRBLPCSM--	2.30E-05	0.00E+00	0.00E+00	1	1	RHR B AND LPCS IN COINCIDENT MAINTENANCE
2SYPMRHRSW1-2M--	2.30E-05	0.00E+00	0.00E+00	1	1	RHRSW DIV 1 AND RHRSW DIV 2 IN COINCIDENT MAINTENANCE
2SYPMRSW1HPCSM--	2.30E-05	0.00E+00	0.00E+00	1	1	RHRSW DIV 1 AND HPCS IN COINCIDENT MAINTENANCE
2SYPMRSW2HPCSM--	2.30E-05	0.00E+00	0.00E+00	1	1	RHRSW DIV 2 AND HPCS IN COINCIDENT MAINTENANCE
2SYPM-SLA-RHBM--	2.30E-05	0.00E+00	0.00E+00	1	1	SBLC A AND RHR B IN COINCIDENT MAINTENANCE
2SYPM-SLB-RHBM--	2.30E-05	0.00E+00	0.00E+00	1	1	SBLC B AND RHR B IN COINCIDENT MAINTENANCE
2SYPPBOCINRB-R--	1.72E-01	0.00E+00	0.00E+00	1	1	BOC INITIATING EVENT PIPE BREAK OCCURS BELOW TAF (OUTSIDE STEAM TUNNEL)
2SYPPBOCSTMTLR--	8.78E-01	0.00E+00	0.00E+00	1	1	BOC INITIATING EVENT PIPE BREAK OCCURS INSIDE STEAM TUNNEL
2SY--RB-CT---F--	1.00E+00	0.00E+00	0.00E+00	1	1	COND. PROB. OF ECCS FAILURE DUE TO ENV. IN REACTOR BUILDING

Table B-4

BASIC EVENT IMPORTANCE MEASURES FOR CDF ASSESSMENT FOR CUTSETS CONTRIBUTING TO ΔCDF

Event Name	Probability	Fus Ves	BirnBm	Red W	Ach W	Description
2SY--STEAMBOUND-	1.00E-01	0.00E+00	0.00E+00	1	1	CONT. RUPTURE CAUSES STEAM BINDING IN ECCS SUCTION
2SY-STEAMBOUNDVT	1.00E-02	0.00E+00	0.00E+00	1	1	UNCONTROLLED VENT CAUSES STEAM BINDING
2SY--VENT1---FCC	9.99E-03	0.00E+00	0.00E+00	1	1	CCF OF HPCS & CRD & LPCI & LPCS GIVEN VENT TO STEAM TUNNEL
2SY--VENT----F--	2.25E-02	0.00E+00	0.00E+00	1	1	LPCI/LPCS FAILS INDEPENDENTLY GIVEN UNCONTROLLED VENT
2SY--VENT----FCC	2.25E-04	0.00E+00	0.00E+00	1	1	CCF OF HPCS & CRD & LPCI & LPCS GIVEN VENT TO RB
2VDDMDG2V09YBD--	3.00E-03	0.00E+00	0.00E+00	1	1	VD DG2A ROOM VENT BAL DAMPER 2VD09YA FAILS TO OPEN ON DEMAND
2VDDMDG2V11YBD--	3.00E-03	0.00E+00	0.00E+00	1	1	VD DG2A ROOM VENT BAL DAMPER 2VD11YA FAILS TO OPEN ON DEMAND
2VDFNCS2V01CBM--	2.00E-03	0.00E+00	0.00E+00	1	1	VD DG2B ROOM COOLNG FAN 2VD01C MUA
2VDFNCS2V03CBM--	2.00E-03	0.00E+00	0.00E+00	1	1	VD DG2A ROOM COOLNG FAN 2VD03C MUA
2VDFNCS2VD01CA--	6.00E-04	0.00E+00	0.00E+00	1	1	VD DG2B ROOM COOLNG FAN 2VD01C FAILS TO START
2VS--4XCRIT--R--	1.00E-01	0.00E+00	0.00E+00	1	1	RUPTURE LARGER THAN 4X DBA CRITICAL FLOW AREA
2VS--HIWATER-F--	1.00E-05	0.00E+00	0.00E+00	1	1	SUPPRESSION POOL WATER UNAVAILABLE DUE TO HI WATER TEMP
2VS--LEVEL---F--	1.00E-05	0.00E+00	0.00E+00	1	1	SUPPRESSION POOL LEVEL ABOVE VACUUM BREAKER PENETRATIONS
2VS--LVLBELOWF--	1.00E-05	0.00E+00	0.00E+00	1	1	SUPPRESSION POOL LEVEL BELOW DOWNCOMERS
2VSPPDOWN24--F--	5.00E-07	0.00E+00	0.00E+00	1	1	DOWNCOMER PIPE (1 OF 98) LEAK / RUPTURE WITHIN 24 HOURS
2VSVBPC001A--K--	1.00E-04	0.00E+00	0.00E+00	1	1	VACUUM BREAKER 2PC001A FAILS TO RECLOSE DURING ACCIDENT RESPONSE
2VSVBPC001B--K--	1.00E-04	0.00E+00	0.00E+00	1	1	VACUUM BREAKER 2PC001B FAILS TO RECLOSE DURING ACCIDENT RESPONSE

Table B-4

BASIC EVENT IMPORTANCE MEASURES FOR CDF ASSESSMENT FOR CUTSETS CONTRIBUTING TO ΔCDF

Event Name	Probability	Fus Ves	BirnBm	Red W	Ach W	Description
2VSVBPC001C--K--	1.00E-04	0.00E+00	0.00E+00	1	1	VACUUM BREAKER 2PC001C FAILS TO RECLOSE DURING ACCIDENT RESPONSE
2VSVBPC001D--K--	1.00E-04	0.00E+00	0.00E+00	1	1	VACUUM BREAKER 2PC001D FAILS TO RECLOSE DURING ACCIDENT RESPONSE
2VS--WATER---R--	1.00E-06	0.00E+00	0.00E+00	1	1	SUPPRESSION POOL WATER UNAVAILABLE DUE TO RUPTURE
2VYFN2VY02C--A--	6.00E-04	0.00E+00	0.00E+00	1	1	VY SW CORNER ROOM (HPCS) FAN 2VY02C FAILS TO START
2VYFN2VY02C--X--	2.40E-04	0.00E+00	0.00E+00	1	1	VY SW CORNER ROOM (HPCS) FAN 2VY02C FAILS TO RUN
2VYFN2VY03C--A--	6.00E-04	0.00E+00	0.00E+00	1	1	VY SE CORNER ROOM (RHR B & C) COOLING FAN 2VY03C FAILS TO START
2VYFNCSNWVY01A--	6.00E-04	0.00E+00	0.00E+00	1	1	VY NW CORNER ROOM (RHR A) COOLING FAN 2VY01C FAILS TO START
2VYFNNWCORNERM--	2.00E-03	0.00E+00	0.00E+00	1	1	VY NW CORNER ROOM (RHR A) COOLING / VENTILATION MUA
2VYFNNWVY01--X--	2.40E-04	0.00E+00	0.00E+00	1	1	VY NW CORNER ROOM (RHR A) COOLING FAN 2VY01C FAILS TO RUN
2VYFNSECORNERM--	2.00E-03	0.00E+00	0.00E+00	1	1	VY SE CORNER ROOM (RHR B & C) COOLING / VENTILATION MUA
2VYFNSEVY03CBX--	2.40E-04	0.00E+00	0.00E+00	1	1	VY SE CORNER ROOM (RHR B & C) COOLING FAN 2VY03C FAILS TO RUN
2VYFNSWCORNERM--	2.00E-03	0.00E+00	0.00E+00	1	1	VY SW CORNER ROOM (HPCS) COOLING MUA
2VYHUNWROOM--H--	9.00E-05	0.00E+00	0.00E+00	1	1	PRE-HEP: OP MISALIGNS NW ROOM COOLING MANUAL VALVES
2VYHUSEROOM--H--	9.00E-05	0.00E+00	0.00E+00	1	1	PRE-HEP: OP MISALIGNS SE ROOM COOLING MANUAL VALVES
2VYHUSWROOM--H--	9.00E-05	0.00E+00	0.00E+00	1	1	PRE-HEP: OP MISALIGNS SW ROOM COOLING MANUAL VALVES
2WSCV2WS003A-K--	1.00E-03	0.00E+00	0.00E+00	1	1	WS PUMP 2WS01PA DISCH CHECK VALVE 2WS003A FAILS TO CLOSE

Table B-4

BASIC EVENT IMPORTANCE MEASURES FOR CDF ASSESSMENT FOR CUTSETS CONTRIBUTING TO ΔCDF

Event Name	Probability	Fus Ves	BirnBm	Red W	Ach W	Description
2WSCV2WS003B-K--	1.00E-03	0.00E+00	0.00E+00	1	1	WS PUMP 2WS01PB DISCH CHECK VALVE 2WS003B FAILS TO CLOSE
2WSFL2WS01F--P--	2.40E-04	0.00E+00	0.00E+00	1	1	WS STRAINER 2WS01F FAILS DUE TO PLUGGING
2WSOPMANTRIP1H--	1.60E-01	0.00E+00	0.00E+00	1	1	HEP: OP Fails to Trip SW for SW Break in RB (Int. Time Frame)
2WSOPMANTRIP3H--	7.50E-03	0.00E+00	0.00E+00	1	1	HEP: Cond. Prob. Failure to Trip SW for Break in RB (Given Failure in Int. Time
2WSOPMANTRIP4H--	3.40E-03	0.00E+00	0.00E+00	1	1	HEP: OP Fails to Trip SW for SW Break in TB (Int. Time Frame)
2WSOPMANTRIP5H--	7.00E-04	0.00E+00	0.00E+00	1	1	HEP: OP Fails to Trip SW for SW Break in TB (Extended Time Frame)
2WSOPMANTRIP6H--	2.10E-01	0.00E+00	0.00E+00	1	1	HEP: Cond. Prob. Failure to Trip SW for Break in TB (Given Failure in Int. Time)
2WSOP-TB-VLV-H--	2.30E-03	0.00E+00	0.00E+00	1	1	HEP: OP Fails to Isolate SW Break in TB (Extended Time Frame)
2WSPM-2ASUMSB---	3.24E-01	0.00E+00	0.00E+00	1	1	WS PUMP 2WS01PA IS IN STANDBY (SUMMER)
2WSPM-2AWINSB---	7.74E-01	0.00E+00	0.00E+00	1	1	WS PUMP 2WS01PA IS IN STANDBY (WINTER)
2WSPM-2BSUMSB---	3.24E-01	0.00E+00	0.00E+00	1	1	WS PUMP 2WS01PB IS IN STANDBY (SUMMER)
2WSPM-2BWINSB---	7.74E-01	0.00E+00	0.00E+00	1	1	WS PUMP 2WS01PB IS IN STANDBY (WINTER)
2WSPMAUTOTRIPF--	1.00E+00	0.00E+00	0.00E+00	1	1	AUTOMATIC TRIP OF PLANT SERVICE WATER PUMPS FAILS
2WSPMPSW2B---A--	1.13E-03	0.00E+00	0.00E+00	1	1	WS PUMP 2WS01PB FAILS TO START
2WSPMPSW2B---M--	6.19E-03	0.00E+00	0.00E+00	1	1	WS PUMP 2WS01PB MUA
2WSPMPSW2B---X--	7.15E-04	0.00E+00	0.00E+00	1	1	WS PUMP 2WS01PB FAILS TO RUN
2WSPP-236Y1OK---	8.00E-01	0.00E+00	0.00E+00	1	1	SW PIPE BREAK IN RB 3G DOES NOT SPRAY 236Y1
2WSPPLPPERMSOK--	5.00E-01	0.00E+00	0.00E+00	1	1	SW PIPE BREAK IN RB 3E DOES NOT SPRAY LP PERMISSIVES
2WSPPLPPERMSVS--	5.00E-01	0.00E+00	0.00E+00	1	1	SW PIPE BREAK IN RB 3E SPRAYS LP PERMISSIVES
2WSPPSPRY236Y1--	2.00E-01	0.00E+00	0.00E+00	1	1	SW PIPE BREAK IN RB 3G SPRAYS 236Y1

Table B-4

BASIC EVENT IMPORTANCE MEASURES FOR CDF ASSESSMENT FOR CUTSETS CONTRIBUTING TO ΔCDF

Event Name	Probability	Fus Ves	BirnBm	Red W	Ach W	Description
2WTPM-B-STDBY---	4.99E-01	0.00E+00	0.00E+00	1	1	WT PUMP 2WT01PB IS IN STANDBY
2WTPMTRAIN2B-M--	1.37E-03	0.00E+00	0.00E+00	1	1	WT PUMP 2WT01PB TRAIN MUA
3-4-PMP-RUNNING	2.65E-01	0.00E+00	0.00E+00	1	1	THREE OR FOUR WS PUMPS NORMALLY RUNNING 89 DAYS PER TWO YEARS (SUMMER)
BACBS-XF-SAT---	1.00E-02	0.00E+00	0.00E+00	1	1	PROB AC BUS WILL NOT TRANSFER TO SAT PRIOR TO LOSS OF MAIN DC BUS
BCWMV-CW007C-K--	1.80E-03	0.00E+00	0.00E+00	1	1	CW RETURN MOV 1(2)CW-007C FTC
BCWMV-CW007D-K--	1.80E-03	0.00E+00	0.00E+00	1	1	CW RETURN MOV 1(2)CW-007D FTC
BDCBS125-ALL-FCC	3.00E-09	0.00E+00	0.00E+00	1	1	CCF OF 125 VDC UNIT 2 DIV 1 & 2 & 3 AND UNIT 1 DIV 1 & 2
BDCBY1D122D12FCC	2.84E-07	0.00E+00	0.00E+00	1	1	CCF OF UNIT 1 DIV 1 & 2 AND UNIT 2 DIV 1 & 2 BATTERIES
BDCBY1D1-2D12FCC	2.84E-07	0.00E+00	0.00E+00	1	1	CCF OF UNIT 1 DIV 1 AND UNIT 2 DIV 1 & 2 BATTERIES
BDCBY1D2-2D12FCC	2.84E-07	0.00E+00	0.00E+00	1	1	CCF OF UNIT 1 DIV 2 AND UNIT 2 DIV 1 & 2 BATTERIES
BDCBY2D1-2D2-FCC	7.22E-07	0.00E+00	0.00E+00	1	1	CCF OF UNIT 2 DIV 1 AND UNIT 2 DIV 2 BATTERIES
BDCBY--ALL5--FCC	7.03E-08	0.00E+00	0.00E+00	1	1	CCF OF ALL 5 BATTERIES
BDCBYBAT4HRS-F--	5.00E-02	0.00E+00	0.00E+00	1	1	COND PROB THAT BATTERY DOES NOT LAST MORE THAN 4 HOURS
BDGCVCS0DG002D--	2.00E-04	0.00E+00	0.00E+00	1	1	DG0 CLNG WTR PUMP 0DG01P DISCH CHECK VALVE 0DG002 FAILS TO OPEN
BDGDG0-2A-2B-ACC	5.81E-06	0.00E+00	0.00E+00	1	1	CCFTS OF DIESEL GENERATORS DG0 & DG2A & DG2B
BDGDG0-2A-2B-XCC	3.05E-05	0.00E+00	0.00E+00	1	1	CCFTR OF DIESEL GENERATORS DG0 & DG2A & DG2B
BDGDG-0-2B---XCC	5.08E-05	0.00E+00	0.00E+00	1	1	CCFTR OF DIESEL GENERATORS DG0 & DG2B
BDGDG1A-0-2A-ACC	5.81E-06	0.00E+00	0.00E+00	1	1	CCFTS OF DIESEL GENERATORS 1A & 0 & 2A
BDGDG1A-0-2A-XCC	3.05E-05	0.00E+00	0.00E+00	1	1	CCFTR OF DIESEL GENERATORS DG1A & DG0 & DG2A

Table B-4

BASIC EVENT IMPORTANCE MEASURES FOR CDF ASSESSMENT FOR CUTSETS CONTRIBUTING TO ΔCDF

Event Name	Probability	Fus Ves	BirnBm	Red W	Ach W	Description
BDGDG1A-0-2B-ACC	5.81E-06	0.00E+00	0.00E+00	1	1	CCFTS OF DIESEL GENERATORS DG1A & DG0 & DG2B
BDGDG1A-0-2B-XCC	3.05E-05	0.00E+00	0.00E+00	1	1	CCFTR OF DIESEL GENERATORS DG1A & DG0 & DG2B
BDGDG1A-2A-2BACC	5.81E-06	0.00E+00	0.00E+00	1	1	CCFTS OF DIESEL GENERATORS DG1A & DG2A & DG2B
BDGDG1A-2A-2BXCC	3.05E-05	0.00E+00	0.00E+00	1	1	CCFTR OF DIESEL GENERATORS DG1A & DG2A & DG2B
BDGDG-ALL-EDGACC	4.92E-06	0.00E+00	0.00E+00	1	1	CCFTS OF DIESEL GENERATORS 0 & 1A & 2A & 2B
BDGDG-ALL-EDGXCC	3.34E-05	0.00E+00	0.00E+00	1	1	CCFTR OF DIESEL GENERATORS 0 & 1A & 2A & 2B
BDGDG-DG0----A--	2.98E-03	0.00E+00	0.00E+00	1	1	DG0 DIESEL GENERATOR 0DG01K FAILS TO START
BDGDG-DG0----M--	1.00E-02	0.00E+00	0.00E+00	1	1	DG0 DIESEL GENERATOR 0DG01K MUA
BDGDG-DG0----X--	9.24E-03	0.00E+00	0.00E+00	1	1	DG0 DIESEL GENERATOR 0DG01K FAILS TO RUN
BDGDGU1DG0---F--	5.00E-01	0.00E+00	0.00E+00	1	1	DIESEL GENERATOR DG0 AUTO CLOSES TO UNIT 1 (50% OF THE TIME) (BASED ON QC)
BDGFL-2-0A-1APCC	5.11E-07	0.00E+00	0.00E+00	1	1	CCF (PLUGGING) OF DG COOLING PUMP STRAINERS 2A & 0A & 1A
BDGFL-2-0A-2BPCC	5.11E-07	0.00E+00	0.00E+00	1	1	CCF (PLUGGING) OF DGCWP STRAINERS 0A & 2A & 2B
BDGFL-2-1A-2BPCC	5.11E-07	0.00E+00	0.00E+00	1	1	CCF (PLUGGING) OF DG COOLING PUMP STRAINERS 2A & 1A & 2B
BDGFL-2A-0A--PCC	6.14E-07	0.00E+00	0.00E+00	1	1	CCF (PLUGGING) OF DGCWP STRAINERS 0A & 2A
BDGFL-2A-2B--PCC	6.14E-07	0.00E+00	0.00E+00	1	1	CCF (PLUGGING) OF DGCWP STRAINERS 2A & 2B
BDGFL-ALLDGCWPCC	2.85E-06	0.00E+00	0.00E+00	1	1	CCF (PLUGGING) OF DG COOLING PUMP STRAINERS 0A & 1A & 2A & 2B
BDGFN-VY05C--F--	1.00E-04	0.00E+00	0.00E+00	1	1	ROOM COOLER FAN FAILS VY05C
BDGHUCS0DG01FH--	9.00E-05	0.00E+00	0.00E+00	1	1	PRE-HEP: OP FAILS TO RESTORE STRAINER C0DG01F AFTER MAINTENANCE
BDGHUCSTRN0A-H--	9.00E-05	0.00E+00	0.00E+00	1	1	PRE-HEP: OP MISALIGNS DG0A COOLING TRAIN MANUAL VALVES

Table B-4

BASIC EVENT IMPORTANCE MEASURES FOR CDF ASSESSMENT FOR CUTSETS CONTRIBUTING TO ΔCDF

Event Name	Probability	Fus Ves	BirnBm	Red W	Ach W	Description
BDGHUCSTRN2A-H--	9.00E-05	0.00E+00	0.00E+00	1	1	PRE-HEP: OP MISALIGNS DG2A COOLING TRAIN MANUAL VALVES
BDGHUCSTRN2B-H--	9.00E-05	0.00E+00	0.00E+00	1	1	PRE-HEP: OP MISALIGNS DG2B COOLING TRAIN MANUAL VALVES
BDGMV-MOV-CLRF--	3.00E-03	0.00E+00	0.00E+00	1	1	ROOM COOLING MOV FAILS TO OPEN
BDGPM-1-0A-2AACC	1.22E-05	0.00E+00	0.00E+00	1	1	CCFTS OF DG COOLING PUMPS 1DG01P & 0DG01P & 2DG01P
BDGPM-1-0A-2AXCC	1.27E-06	0.00E+00	0.00E+00	1	1	CCFTR OF DG COOLING PUMPS 1DG01P & 0DG01P & 2DG01P
BDGPM-2A-0A--ACC	3.06E-05	0.00E+00	0.00E+00	1	1	CCFTS OF DG COOLING PUMPS 2DG01P & 0DG01P
BDGPM-2A-0A--XCC	1.33E-06	0.00E+00	0.00E+00	1	1	CCFTR OF DG COOLING PUMPS 2DG01P & 0DG01P
BDGPM-2A-1A--ACC	3.06E-05	0.00E+00	0.00E+00	1	1	CCFTS OF DG COOLING PUMPS 2DG01P &1DG01P
BDGPM-ALLDGCWACC	4.49E-06	0.00E+00	0.00E+00	1	1	CCFTS OF DG COOLING PUMPS 1DG01P & 0DG01P & 2DG01P & 2E22-C002
BDGPM-ALLDGCWXCC	4.83E-07	0.00E+00	0.00E+00	1	1	CCFTR OF DG COOLING PUMPS 1DG01P & 0DG01P & 2DG01P & 2E22-C002
BDGPMCS0DG01PA--	2.39E-03	0.00E+00	0.00E+00	1	1	DG0 COOLING WATER PUMP 0DG01P FAILS TO START
BDGPMCS0DG01PX--	1.94E-04	0.00E+00	0.00E+00	1	1	DG0 COOLING WATER PUMP 0DG01P FAILS TO RUN
BDGPPABOVELAKE--	2.00E-01	0.00E+00	0.00E+00	1	1	PIPE BREAK ABOVE LAKE ELEVATION
BDGPPBELOWLAKE--	8.00E-01	0.00E+00	0.00E+00	1	1	PIPE BREAK BELOW LAKE ELEVATION
BDGTE-LOGIC--F--	2.00E-03	0.00E+00	0.00E+00	1	1	AUTOMATIC LOGIC FOR ROOM COOLING FAILS
BDGXV0DG00134K--	5.00E-05	0.00E+00	0.00E+00	1	1	CCFTC OF L.O. MANUAL VALVES 0DG001, 3, & 4
BFPOP-DFPENV1H--	5.00E-01	0.00E+00	0.00E+00	1	1	HEP: OP FAILS TO ALIGN DFP DUE TO ADVERSE ENV IN TB (VENT TO STEAM TUNNEL)
BFPOP-DFPENV-H--	1.00E-01	0.00E+00	0.00E+00	1	1	HEP: OP FAILS TO ALIGN DFP DUE TO ADVERSE ENV IN TB (VENT TO RB OR CNTNMT FAIL)
BLCRPVBRCH---F--	1.00E-01	0.00E+00	0.00E+00	1	1	RPV BREACH DISRUPTS ECCS REFILL CAPABILITY
BSACM0SA01C--X--	1.64E-03	0.00E+00	0.00E+00	1	1	SA COMPRESSOR 0SA01C FAILS TO RUN

Table B-4

BASIC EVENT IMPORTANCE MEASURES FOR CDF ASSESSMENT FOR CUTSETS CONTRIBUTING TO ΔCDF

Event Name	Probability	Fus Ves	BirnBm	Red W	Ach W	Description
BSACM-BIGRED-F--	2.40E-03	0.00E+00	0.00E+00	1	1	SA TRAILER MOUNTED AIR COMPRESSOR FAILS TO RUN
BSACMSHARED--M--	6.22E-02	0.00E+00	0.00E+00	1	1	SA COMPRESSOR 0SA01C TRAIN MUA
BSW--LOSWIE--F--	1.24E-06	0.00E+00	0.00E+00	1	1	LOSS OF SW IE PERCENT FAILING CCSW DUE TO LAKE EFFECTS
BSW-PMP-RUN-S/F	4.00E-01	0.00E+00	0.00E+00	1	1	PERCENTAGE OF TIME ANY ONE WS PUMP RUNS IN SPRING / FALL
BSW-PMP-RUN-SUM	6.50E-01	0.00E+00	0.00E+00	1	1	PERCENTAGE OF TIME ANY ONE WS PUMP RUNS IN SUMMER
BSW-PMP-RUN-WIN	2.00E-01	0.00E+00	0.00E+00	1	1	PERCENTAGE OF TIME ANY ONE WS PUMP RUNS IN WINTER
BSYDG-DG0DG2BM--	2.30E-05	0.00E+00	0.00E+00	1	1	DG 0 AND DG 2B IN COINCIDENT MAINTENANCE
BSYFL-9STRNR-PCC	6.80E-08	0.00E+00	0.00E+00	1	1	CCF (PLUGGING) OF ALL 5 CSCS STRAINERS AND 3 WS STRAINERS
BSYPPNONISOLBL--	1.00E+00	0.00E+00	0.00E+00	1	1	BREAK IN THIS PIPING SEGMENT CANNOT BE ISOLATED FROM LAKE
BVDDMDG0V01YAD--	3.00E-03	0.00E+00	0.00E+00	1	1	VD DG0 ROOM VENT BAL DAMPER 0VD01YA FAILS TO OPEN
BVDDMDG0V01YAM--	8.00E-04	0.00E+00	0.00E+00	1	1	VD DG0 ROOM VENT BAL DAMPER 0VD01YA MUA
BVDDMDG0V02YAM--	8.00E-04	0.00E+00	0.00E+00	1	1	VD DG0 ROOM VENT BAL DAMPER 0VD02YA MUA
BVDDMDG0V03YAD--	3.00E-03	0.00E+00	0.00E+00	1	1	VD DG0 ROOM VENT OUTLET BAL DAMPER 0VD03YA FAILS TO OPEN
BVDDMDG0V03YAM--	8.00E-04	0.00E+00	0.00E+00	1	1	VD DG0 ROOM VENT OUTLET BAL DAMPER 0VD03YA MUA
BVDFNCONTROL-M--	8.00E-04	0.00E+00	0.00E+00	1	1	VD DG0 ROOM VENT DAMPERS CONTROL SYSTEM MUA
BVDFNCSDG0V01M--	2.00E-03	0.00E+00	0.00E+00	1	1	VD DG0 ROOM COOLING FAN 0VD01C MUA
BVDFNCSOVD01CA--	6.00E-04	0.00E+00	0.00E+00	1	1	VD DG0 ROOM COOLING FAN OVD01C FAILS TO START
BWSCV0WS003--K--	1.00E-03	0.00E+00	0.00E+00	1	1	WS PUMP 0WS01P DISCH CHECK VALVE 0WS003 FAILS TO CLOSE

Table B-4

BASIC EVENT IMPORTANCE MEASURES FOR CDF ASSESSMENT FOR CUTSETS CONTRIBUTING TO ΔCDF

Event Name	Probability	Fus Ves	BirnBm	Red W	Ach W	Description
BWSOPSTNDBY--H--	7.40E-04	0.00E+00	0.00E+00	1	1	HEP: OP FAILS TO START STNDBY WS PUMP
BWSPM-0-SUMSB---	3.24E-01	0.00E+00	0.00E+00	1	1	WS PUMP 0WS01P IS IN STANDBY (SUMMER)
BWSPM-0-WINSB---	7.74E-01	0.00E+00	0.00E+00	1	1	WS PUMP 0WS01P IS IN STANDBY (WINTER)
BWTOPWTPMSTBYH--	1.50E-02	0.00E+00	0.00E+00	1	1	HEP: OP FAILS TO ALIGN STANDBY TBCCW PUMP TRAIN
DGRECOV-4HR	4.83E-01	0.00E+00	0.00E+00	1	1	DIESEL GENERATOR RECOVERY WITHIN 4 HOURS
DGRECOV-7HR	3.32E-01	0.00E+00	0.00E+00	1	1	DIESEL GENERATOR RECOVERY WITHIN 7 HOURS
DLOOP-IE-GR	3.72E-01	0.00E+00	0.00E+00	1	1	COND. PROB. DLOOP DUE TO GRID RELATED EVENT
DLOOP-IE-PC	1.51E-02	0.00E+00	0.00E+00	1	1	COND. PROBABILITY DLOOP DUE TO PLANT CENTERED EVENT
DLOOP-IE-SW	3.84E-01	0.00E+00	0.00E+00	1	1	COND. PROBABILITY DLOOP DUE TO SEVERE WEATHER EVENT
DLOOP-IE-SWYD	2.31E-01	0.00E+00	0.00E+00	1	1	COND. PROBABILITY DLOOP DUE TO SWYD EVENT
LOOP-IE-GR	1.93E-01	0.00E+00	0.00E+00	1	1	COND. PROBABILITY LOOP DUE TO GRID RELATED EVENT
LOOP-IE-PC	1.07E-01	0.00E+00	0.00E+00	1	1	COND. PROBABILITY LOOP DUE TO PLANT CENTERED EVENT
LOOP-IE-SW	2.36E-01	0.00E+00	0.00E+00	1	1	COND. PROBABILITY DUE TO SEVERE WEATHER EVENT
LOOP-IE-SWYD	4.65E-01	0.00E+00	0.00E+00	1	1	COND. PROBABILITY LOOP DUE TO SWYD EVENT
OSPR20HR-GR	5.66E-03	0.00E+00	0.00E+00	1	1	FAILURE TO RECOVER OSP WITHIN 20 HOURS (GRID RELATED LOOP EVENT)
OSPR20HR-SW	1.33E-01	0.00E+00	0.00E+00	1	1	FAILURE TO RECOVER OSP WITHIN 20 HOURS (SEVERE WEATHER LOOP EVENT)
OSPR30MIN-GR	8.25E-01	0.00E+00	0.00E+00	1	1	FAILURE TO RECOVER OSP WITHIN 30 MINUTES (GRID RELATED LOOP EVENT)
OSPR30MIN-PC	4.79E-01	0.00E+00	0.00E+00	1	1	FAILURE TO RECOVER OSP WITHIN 30 MIN. (PLANT CENTERED LOOP EVENT)
OSPR30MIN-SW	7.73E-01	0.00E+00	0.00E+00	1	1	FAILURE TO RECOVER OSP WITHIN 30 MIN. (SEVERE WEATHER LOOP EVENT)

Table B-4

BASIC EVENT IMPORTANCE MEASURES FOR CDF ASSESSMENT FOR CUTSETS CONTRIBUTING TO ΔCDF

Event Name	Probability	Fus Ves	BirnBm	Red W	Ach W	Description
OSPR30MIN-SWYD	5.95E-01	0.00E+00	0.00E+00	1	1	FAILURE TO RECOVER OSP WITHIN 30 MIN. (SWYD CENTERED EVENT)
OSPR4HR-GR	1.54E-01	0.00E+00	0.00E+00	1	1	FAILURE TO RECOVER OSP WITHIN 4 HOURS (GRID RELATED LOOP EVENT)
OSPR4HR-SW	3.82E-01	0.00E+00	0.00E+00	1	1	FAILURE TO RECOVER OSP WITHIN 4 HOURS (SEVERE WEATHER LOOP EVENT)
OSPR4HR-SWYD	7.86E-02	0.00E+00	0.00E+00	1	1	FAILURE TO RECOVER OSP WITHIN 4 HOURS (SWYD LOOP EVENT)
OSPR7HR-GR	6.10E-02	0.00E+00	0.00E+00	1	1	FAILURE TO RECOVER OSP WITHIN 7 HOURS (GRID RELATED LOOP EVENT)
OSPR7HR-PC	1.78E-02	0.00E+00	0.00E+00	1	1	FAILURE TO RECOVER OSP WITHIN 7 HOURS (PLANT CENTERED LOOP EVENT)
OSPR7HR-SW	2.80E-01	0.00E+00	0.00E+00	1	1	FAILURE TO RECOVER OSP WITHIN 7 HOURS (SEVERE WEATHER LOOP EVENT)
OSPR7HR-SWYD	3.14E-02	0.00E+00	0.00E+00	1	1	FAILURE TO RECOVER OSP WITHIN 7 HOURS (SWYD LOOP EVENT)

Table B-5

RISK ASSESSMENT SENSITIVITY RESULTS

Risk Metric	Value	Acceptance Guidelines	Reference
ΔCDF	1.4E-7/yr	<1.0E-06/yr	RG 1.174
ICCDP	1.4E-7	<5.0E-07	RG 1.177
ΔLERF	4.7E-8/yr	<1.0E-07/yr	RG 1.174
ICLERP	4.7E-8	<5.0E-08	RG 1.177

B.3 PARAMETRIC UNCERTAINTY

Consistent with the ASME PRA Standard, quantitative parametric uncertainty analyses for both CDF and LERF have been performed and are summarized in this section. The results of the uncertainty analysis for the proposed CT are compared with the results of the uncertainty analysis performed for the 2006C PRA Update.

The parametric uncertainty analyses are performed using Monte Carlo simulation. The analysis is performed using the EPRI R&R workstation UNCERT software.

B.3.1 Core Damage Frequency (CDF) Parametric Uncertainty Distribution

The resulting uncertainty distribution for the proposed CT configuration (i.e., $CDF_{SLC-OOS}$) calculated by UNCERT Version 2.3a for CDF is shown in Figure B-1. It summarizes:

- Distribution statistics (e.g., mean, error factor, etc.)
- Probability density chart of the CDF

The approximate error factor (or range factor) for the proposed CT is 3.1, as compared to the error factor of the LS06C Model of 2.1.

One of the critical aspects of the parametric uncertainty assessments is the desire to ensure that the point estimate calculation performed with the base PRA model (i.e., using CAFTA) produces a point estimate result that is not too dissimilar from the true mean calculation when the correlation effect is accounted for. Table B-6 provides this comparison for the proposed CT model (i.e., $CDF_{SLC-OOS}$):

Table B-6

PARAMETER UNCERTAINTY COMPARISON FOR CDF WITH SLC OUT OF SERVICE

CDF Parameter	$CDF_{SLC-OOS}$ Result	Code
Point Estimate	8.32E-6/yr	CAFTA
Uncertainty Mean	8.36E-6/yr	UNCERT
Δ	4.0E-8/yr (0.5%)	-

This difference represents a very small perturbation on the point estimate CDF. Therefore, it is concluded that the point estimate CDF calculated by CAFTA can be used to represent the mean CT CDF.

B.3.2 Large Early Release Frequency (LERF) Parametric Uncertainty Distribution

The same process as used for CDF is also used for LERF. The resulting uncertainty distribution calculated by UNCERT Version 2.3a for LERF is shown in Figure B-2. The figure summarizes the following:

- Distribution statistics (e.g., mean, error factor, etc.)
- Probability density chart of the LERF

The approximate error factor (or range factor) for the proposed CT for the LERF uncertainty distribution is 5.6 (calculated using SQR(95%/5%)), as compared to the error factor of 2.9 for the LS06C model.

Table B-7 provides a comparison of the PRA LERF point estimate and the propagated uncertainty mean for the proposed CT case (i.e., $LERF_{SLC\text{-}OOS}$):

Table B-7
PARAMETER UNCERTAINTY COMPARISON FOR LERF WITH SLC OUT OF SERVICE

LERF Parameter	$LERF_{SLC\text{-}OOS}$ Result	Code
Point Estimate	1.78E-6/yr	CAFTA
Uncertainty Mean	1.78E-6/yr	UNCERT
Δ	0.00/yr	--

The propagated uncertainty mean for $LERF_{SLC\text{-}OOS}$ is the identical, to two decimal places, as the point estimate value. Therefore, it is concluded that the point estimate LERF calculated by CAFTA can be used to represent the mean CT LERF.

Figure B-1

CDF PARAMETRIC UNCERTAINTY DISTRIBUTION
FOR THE PROPOSED COMPLETION TIME

UNCERT 2.3a
COREDAMAGE.CUT
LS206C-UNCERT.BE
Samples 50,000
Random Seed Auto

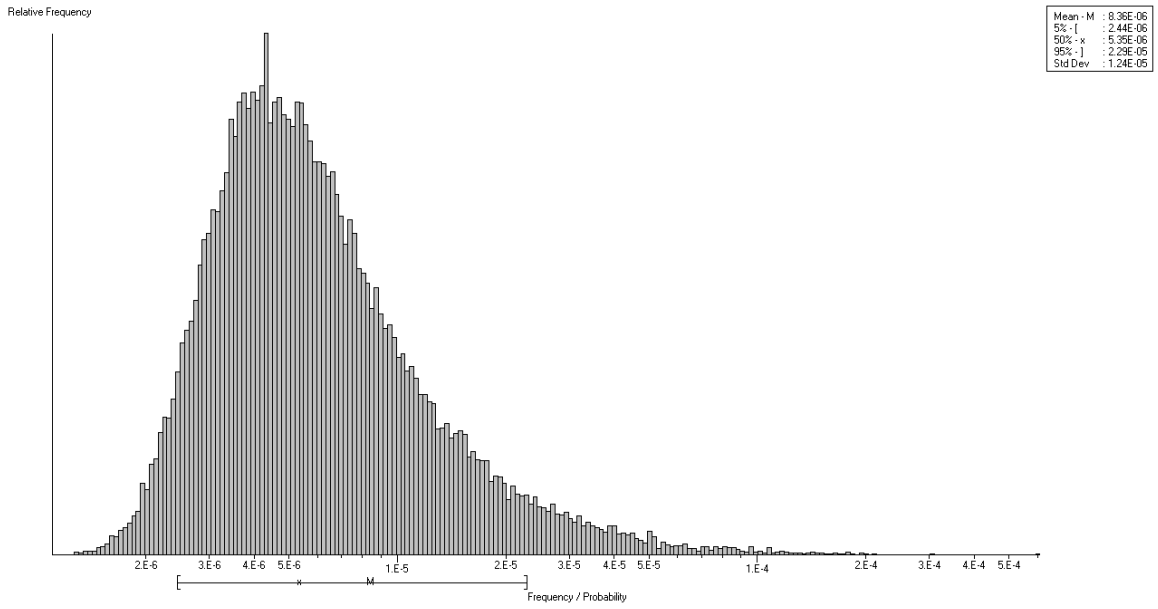

Figure B-2

LERF PARAMETRIC UNCERTAINTY DISTRIBUTION
FOR THE PROPOSED COMPLETION TIME

UNCERT 2.3a
LERF-TOT.CUT
LS206C-UNCERT.BE
Samples 50,000
Random Seed Auto

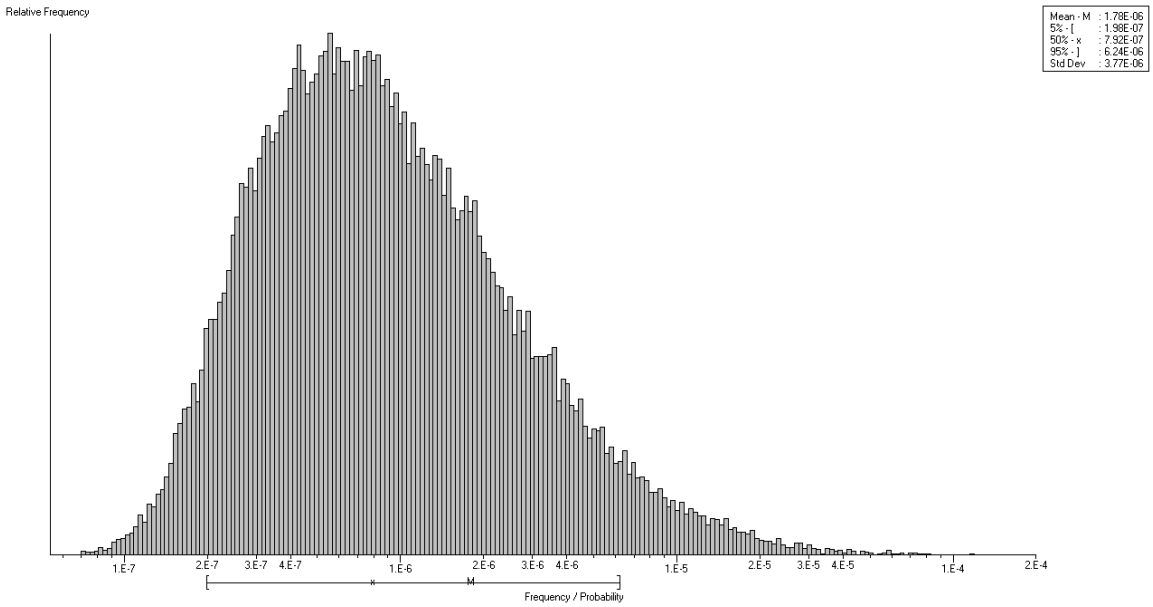

Appendix C

BWROG Assessment of NRC Information Notice 2007-07

BWROG Assessment of NRC Information Notice 2007-07

1.0) Summary:

This assessment addresses the condition described by the NRC in NRC Information Notice 2007-07 and in the inspection report referenced therein.

The overall assessment of the condition described in NRC Information Notice 2007-07 by the BWROG is that it represents a condition with a low likelihood of occurrence, with low safety significance and with multiple layers of defense-in-depth currently in place each with the capability to either prevent the condition from occurring or to effectively mitigate the effects of the occurrence without consequence.

It is the position of the BWROG that all BWRs should have a manual operator action tied to their post-fire safe shutdown procedures instructing the operator to implement the requirements of EO-113 should the fire impact the ability to scram. This manual operator action should be endorsed by the NRC for use in both III.G.1 and 2 areas, as well as, III.G.3 and III.L areas. The evaluation provided in this paper and the limited likelihood of occurrence of the condition are considered to be sufficient justification for concluding that this manual operator action is both feasible and reliable.

It is recommended that each BWR review this assessment and assure that their plant specific conditions are consistent with the measures described herein. As a minimum, each licensee should assure that the EOP action to implement the requirements of EO-113 is linked to their post-fire safe shutdown procedures.

2.0) Description of Issue:

NRC Information Notice 2007-07 postulates a condition where two (2) hot shorts could result in the failure of one of four control rods groups to insert during a manual scram from the Control Room. The IN further postulates that with the reactor in this condition the operator rapidly depressurizes the reactor and re-floods the reactor with cold water using a low pressure system. The IN further states:

> "By design, the negative reactivity, added by all four rod groups during a scram, provides adequate shutdown margin to offset the positive void and temperature reactivity [that] would have been added to the vessel [during such a shutdown sequence]".

3.0) Scram System Design Description:

Typically, the Reactor Protection System (RPS) for a BWR consists of two (2) Trip Systems (A and B), each containing two Trip Channels (A1, A2, B1, B2) of sensors and logic. The four channels contain automatic scram logic for the monitored parameters listed below, each of which has at least one input to each of the logic channels:

- Scram Discharge Volume Water Level

BWROG Assessment of NRC Information Notice 2007-07

- Main Steam Line Isolation Valve Position
- Turbine Stop Valve Position
- Turbine Control Valve Fast Closure
- Reactor Vessel Water Level
- Main Steam line Radiation
- Neutron Monitoring System
- Primary Containment Pressure
- Reactor Vessel Pressure

The RPS automatic trip logic requires at least one channel in each trip system to be tripped in order to cause a scram. This is referred to as one-out-of-two-taken-twice trip logic.

The two RPS Trip Systems are independently powered from their respective RPS Buses. The trip channels (A1, A2, B1, B2) associated with each Trip System (A, B) operate the automatic scram Trip Logic Relays (K14 A-H). The RPS auto scram logic string is sometimes referred to as "trip actuator" or "actuation" logic because the output of the logic is what actually causes the control rods to scram by de-energizing the pilot scram solenoid valves.

The RPS circuits are a fail-safe design in that the circuits are normally energized, and the loss of power, including the loss of offsite power, will initiate the scram.

Once the scram has occurred, re-energization of the RPS logic will not, in and of itself, cause the control rod movement necessary to re-establish reactor criticality.

4.0) Evaluation:

The evaluation performed is divided into two sections. The first section performs a circuit analysis of the scram circuitry. This portion of the evaluation examines the scram circuitry in an effort to determine the set of hot shorts that, should they occur, have the potential to prevent one or more rod groups from inserting. The first section also addresses the significance of the postulated condition and the features currently in place with the capability to prevent or mitigate the effects of the condition. The second section addresses the implications for Appendix R Compliance given the required circuit design for this important safety system and given the potential ramifications of the hot shorts postulated in the first section.

4.1) Circuit Analysis:

Figures 1 through 4 attached to this paper shows portions of the scram circuitry for a typical BWR. Three (3) separate cases involving up to two hot shorts are discussed in this paper.

BWROG Assessment of NRC Information Notice 2007-07

Case I: (Refer to Figure 1)

Case I attempted to identify the condition described in IN 2007-07. IN 2007-07 concluded that two (2) hot shorts were required to prevent a single rod group from scramming.

The BWROG, however, was unable to identify any circuitry where two (2) fire-induced hot shorts would prevent one of four scram rod groups from inserting.

The BWROG identified that a single hot short in either of the divisionalized trip logics can prevent the scram of a single rod group. This finding is different than the conclusion in IN 2007-07. The finding of the BWROG assessment is a direct consequence of the 1 out of 2 taken twice logic used in the design for the scram function.

The single hot short with the potential for preventing the scramming of a single rod group could occur in either the Trip System A or B Relay Panel. [Refer to Figure 1 attached for a description of the location of the subject hot short, labeled as "Hot Short 1".] The hot short must occur prior to the operator scramming the reactor. The location of the hot short shown in Figure 1 would be either in one of the Trip System Relay Panels or in a raceway carrying the circuit from the Trip System Relay Panel to the Scram Pilot Solenoid Valves. (Note: For some licensees, the relay panels are located in separate relay rooms outside of the main control room.)

For the hot short in this case to affect the reactivity function, it must remain in effect until such time when the operator depressurizes the reactor and begins re-flooding with a low pressure system. The Emergency Operating Procedures for a BWR instruct the operator not to depressurize the reactor until reactor level reaches the top of active fuel. In a typical BWR, it will take approximately 20 to 25 minutes of boil-off for reactor level to decrease to the top of active fuel. Industry and NRC cable fire testing have shown that hot shorts last for only a few minutes prior to shorting to ground. [EPRI Testing determined the maximum duration of a hot short was 11.3 minutes. CAROLFIRE Testing determined that the maximum duration of a hot short was 7.6 minutes.]

Therefore, it appears unlikely that the required hot short could last for a sufficient amount of time that the impacted control rod group would fail to insert prior to the time when the EOPs directed the operator to depressurize the reactor.

Case II: (Refer to Figure 2)

Case II is one of two cases identified where two (2) fire-induced hot shorts could prevent a full scram. (Note: No conditions were identified where two (2) fire-induced hot shorts were required to prevent a single rod group from scramming.)

BWROG Assessment of NRC Information Notice 2007-07

Refer to Figure 2 attached for the case where two (2) fire-induced hot shorts could prevent a full scram.

This case postulates a condition where two hot shorts just below the manual scam switches for two trip channels can prevent a full scram. The postulated hot shorts could occur in either the main control room operating bench board or in a raceway carrying the trip circuit to one of the Trip System Relay Panels. The hot short will keep the K15 relays from de-energizing and this will subsequently keep the K14 relays energized. By keeping the K14 relays energized, as shown in Figure 1, none of the rod groups will de-energize and none will insert. Figure 2 shows the location of the two individual hot shorts. One affects the K15B relay and one affects the K15D relay. The K15 relays are de-energized by actuating the manual scram switches in the Control Room on the main control board. Keeping the K15 relays energized by the hot shots shown in Figure 2, will keep the K14 relays energized, as shown in Figures 3. Keeping the K14 relays energized, as shown in Figure 3, will prevent rod group insertion, as shown in Figure 1.

For this case, however, there are numerous other inputs into the scram logic that can override the effects of the hot short affecting the K15 relays. Refer to Figures 3 and 4 for the additional input signals to the scram function. For example, as shown on Figure 4, closure of the MSIVs or reactor level reaching the +13" level will override the effects of the hot shorts affecting the K15 relays and result in a de-energization of the K14 relays and full rod insertion.

Therefore, it appears unlikely that the required hot shorts, even if they were to co-exist, could prevent the scram and cause the reactivity transient described in the IN. This is true because the effect of the hot short would be overriddened by the reduction in reactor level that would be necessary before the operator would take the action to depressurize the reactor prior to making up with a low pressure system.

<u>Case III:</u> (Refer to Figure 3) (Limited to the Trip System Relay Panels)

Case III is similar to Case II. Hot shorts are postulated in the locations shown in Figure 3, the K14 relays will again remain energized. The energization of the K14 relays will prevent the scram for all rod groups.

For this case to occur, the fire must sufficiently damage two separate circuits and the fire induced damage must occur on each circuit simultaneously. Industry and NRC cable fire testing have shown that hot shorts last for only a few minutes prior to shorting to ground. [EPRI Testing determined the maximum duration of a hot short was 11.3 minutes. CAROLFIRE Testing determined that the maximum duration of a hot short was 7.6 minutes.]

BWROG Assessment of NRC Information Notice 2007-07

> Therefore, it appears unlikely that the required hot shorts would co-exist given that the time required for fire damage to the individual cables and fire propagation between relay compartments to occur.

For all of the cases discussed above, regardless of the number of fire-induced hot shorts postulated, the required hot short configuration must occur prior to the operator scramming the unit. For those configurations requiring more than a single hot short, the two hot shorts must exist coincidentally.

The hot short configurations must remain in effect until such time when the operator depressurizes the reactor and begins re-flooding with a low pressure system. The Emergency Operating Procedures for a BWR instruct the operator not to depressurize the reactor until reactor level reaches the top of active fuel.

Additionally, the scenario described in the IN represents a condition more severe than many BWRs would experience due to the availability of additional safe shutdown system capability. Many BWRs also have high pressure systems available for alternative shutdown at their remote shutdown panel. For a BWR with a high pressure system safe shutdown capability, the time available prior to the need to reduce pressure reactor pressure for injection with either a low pressure system or for shutdown cooling would be extended by a number of hours.

Finally, operators for all BWRs are trained on the use of the Emergency Operating Procedures. EO-113 for each BWR provides clear direction to the to either remove RPS power or the vent the SCRAM air header to achieve a full scram.

4.2) <u>Implications for Appendix R Compliance:</u>

For all plants the main operating bench board is in the main control room. At some plants, the relay panels are located in the main control room. In other plants the relay panels are located in a relay room separate from the main control room. For these latter set of plants, some classify the relay room as III.G.3 areas and some classify the relay room as III.G.1 and 2 areas.

This issue, therefore, has implications for redundant safe shutdown under Appendix R Section III.G.1 and 2 and for alternative and dedicated safe shutdown under the requirements of Appendix R Section III.G.3 and III.L.

With respect to Case I, it is clear that none of the methods available under III.G.2 would be effective in preventing the condition. Protection of the subject circuits with a 3 hour fire rated barrier, with a one hour fire rated barrier with automatic suppression and detection or by separation of 20 feet with automatic suppression and detection and no intervening combustibles, would not prevent the occurrence of this event. Additionally, even if the relay panels for each of the four channels are located in separate control/relay room in separate fire areas, the condition could still occur and 3-hour fire rated barriers

BWROG Assessment of NRC Information Notice 2007-07

for each of these postulated fire areas would be ineffective in preventing the occurrence of the condition. The condition postulated in Case I can only be mitigated by the use of a manual operator action consistent with the manual operator actions currently invoked under Emergency Operating Procedure, EO-113.

The conditions described for Cases II and III are similar. Neither of these cases represents a condition that is prevented by the type of redundant train separation invoked under Appendix R, since the postulated hot shorts occur within a single division.

Therefore, the provision of Appendix R cannot be used to address the conditions described in this paper. Re-design of the scram circuitry is not a viable option without compromising the design function of this important safety function. In addition to the features of the RPS system described above, the Alternate Rod Insertion (ARI) system (vents SCRAM air header), Backup Scram Solenoids (vents SCRAM air header), and Standby Liquid Control (SLC) system (inserts sodium pentaborate) provide additional redundant means to achieve reactor shutdown. For areas such as the main Control Room and the Relay Rooms, however, similar fire-induced impacts could be postulated.

This paper has highlighted one example of an area where verbatim compliance with the requirements of Appendix R is insufficient in preventing fire induced damage from potentially impacting safe shutdown. The BWROG believes that this case and, potentially, other like it are the reason why from the initial issuance of Appendix R that certain conditions were considered to be initial boundary conditions for the Appendix R Post-Fire Safe Shutdown Analysis. Assuming that the reactor is scrammed was one of those initial boundary conditions given for the Post-Fire Safe Shutdown Analysis. NRC Generic letter 86-10 in the Response to Question 3.8.4, Control Room Fire Considerations, endorsed the assumption of a reactor trip prior to evacuating the Control Room. Based on this and on the fail-safe nature of the reactor protection system, many licensees assumed and the NRC accepted that a reactor trip was an initial boundary condition for the start of the post-fire safe shutdown analysis, i.e. the plant is scrammed prior to the scram circuitry being damaged by the fire.

Although the BWROG believes that the prior industry position related to the scram is correct and its use provides for a safe plant design, the BWROG also recognizes that fires have some limited potential to impact the scram capability. As a precaution, it is the position of the BWROG that all BWRs should have a manual operator action tied to their post-fire safe shutdown procedures instructing the operator to implement the requirements of EO-113 should the fire impact the ability to scram. This manual operator action should be endorsed by the NRC for use in both III.G.1 and III.G.2 areas, as well as, III.G.3 and III.L areas. The evaluation provided in this paper and the limited likelihood of occurrence of the condition are considered to be sufficient justification for the feasibility and reliability of this manual operator action.

BWROG Assessment of NRC Information Notice 2007-07

5.0) Risk Assessment:

Given the unlikely set of circumstances required for this condition to occur and to remain in effect until such time that it could pose a beyond design basis concern to the reactor, the risk associated with this issue is judged to be low.

6.0) Safety Assessment:

Given the fact that there are multiple barriers (circuit failure characteristics, design features, procedural guidance and rigorous operator training) in place to prevent the occurrence of this condition, the safety significance of this issue is also judged to be very low.

7.0) Conclusions and Recommendations:

This assessment addresses the condition described by the NRC in NRC Information Notice 2007-07 and in the inspection report referenced therein.

The overall assessment of the condition described in NRC Information Notice 2007-07 by the BWROG is that it represents a condition with a low likelihood of occurrence, with low safety significance and with multiple layers of defense-in-depth currently in place each with the capability to either prevent the condition from occurring or to effectively mitigate the effects of the occurrence without consequence.

It is the position of the BWROG that all BWRs should have a manual operator action tied to their post-fire safe shutdown procedures instructing the operator to implement the requirements of EO-113 should the fire impact the ability to scram. This manual operator action should be endorsed by the NRC for use in both III.G.1 and 2 areas, as well as, III.G.3 and III.L areas. The evaluation provided in this paper and the limited likelihood of occurrence of the condition are considered to be sufficient justification for concluding that this manual operator action is both feasible and reliable.

It is recommended that each BWR review this assessment and assure that their plant specific conditions are consistent with the measures described herein. As a minimum, each licensee should assure that the EOP action to implement the requirements of EO-113 is linked to their post-fire safe shutdown procedures.

Prepared by: Thomas A. Gorman **Date:** 10/16/2007
Thomas A. Gorman, PE, SFPE

Reviewed by: Gary Birmingham **Date:** 11/13/2007
Gary S. Birmingham

BWROG Assessment of
NRC Information Notice 2007-07

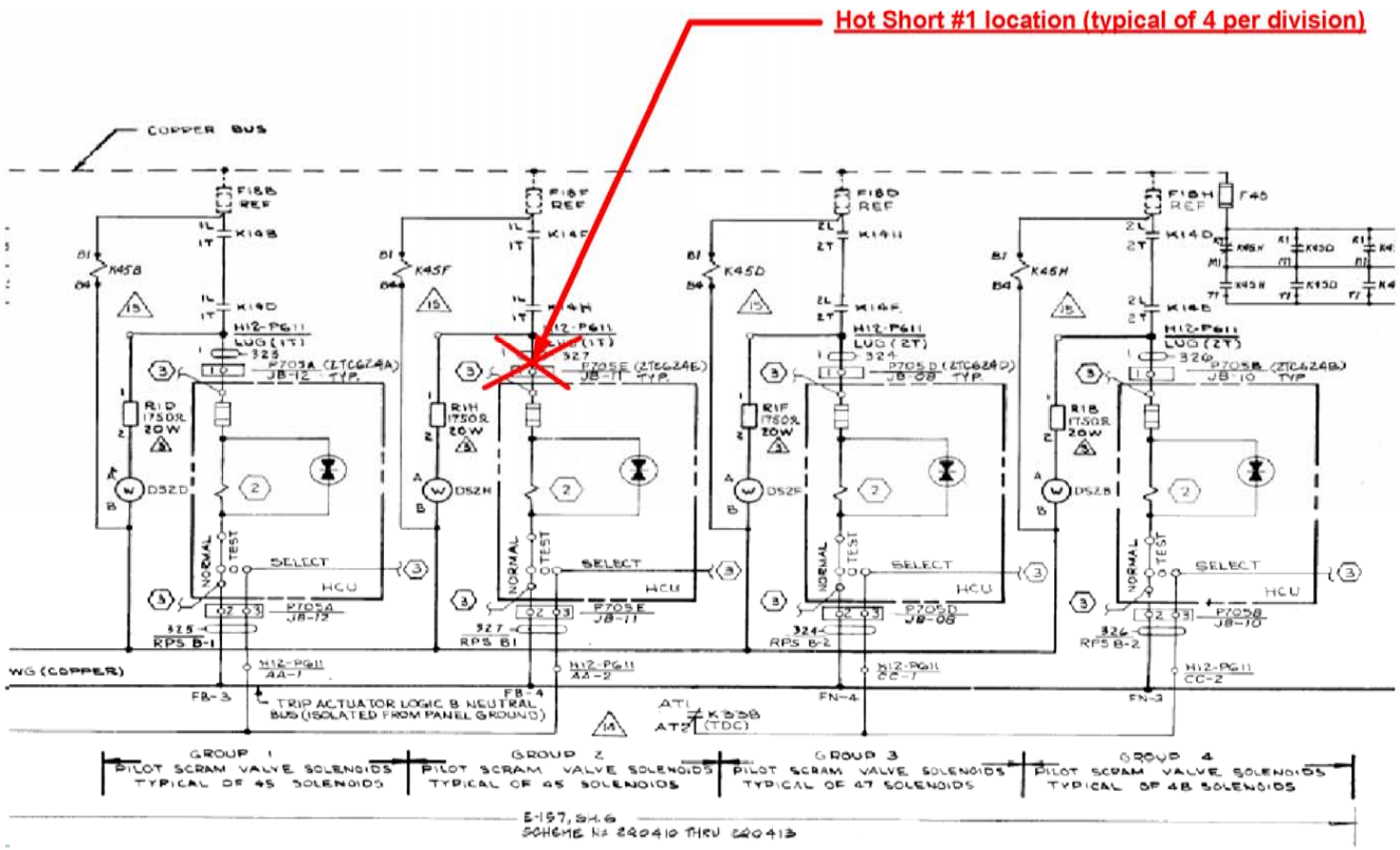

Figure 1 - Relay Panel Circuitry Controlling Individual Rod Groups (typical of two Trip Systems)

BWROG Assessment of
NRC Information Notice 2007-07

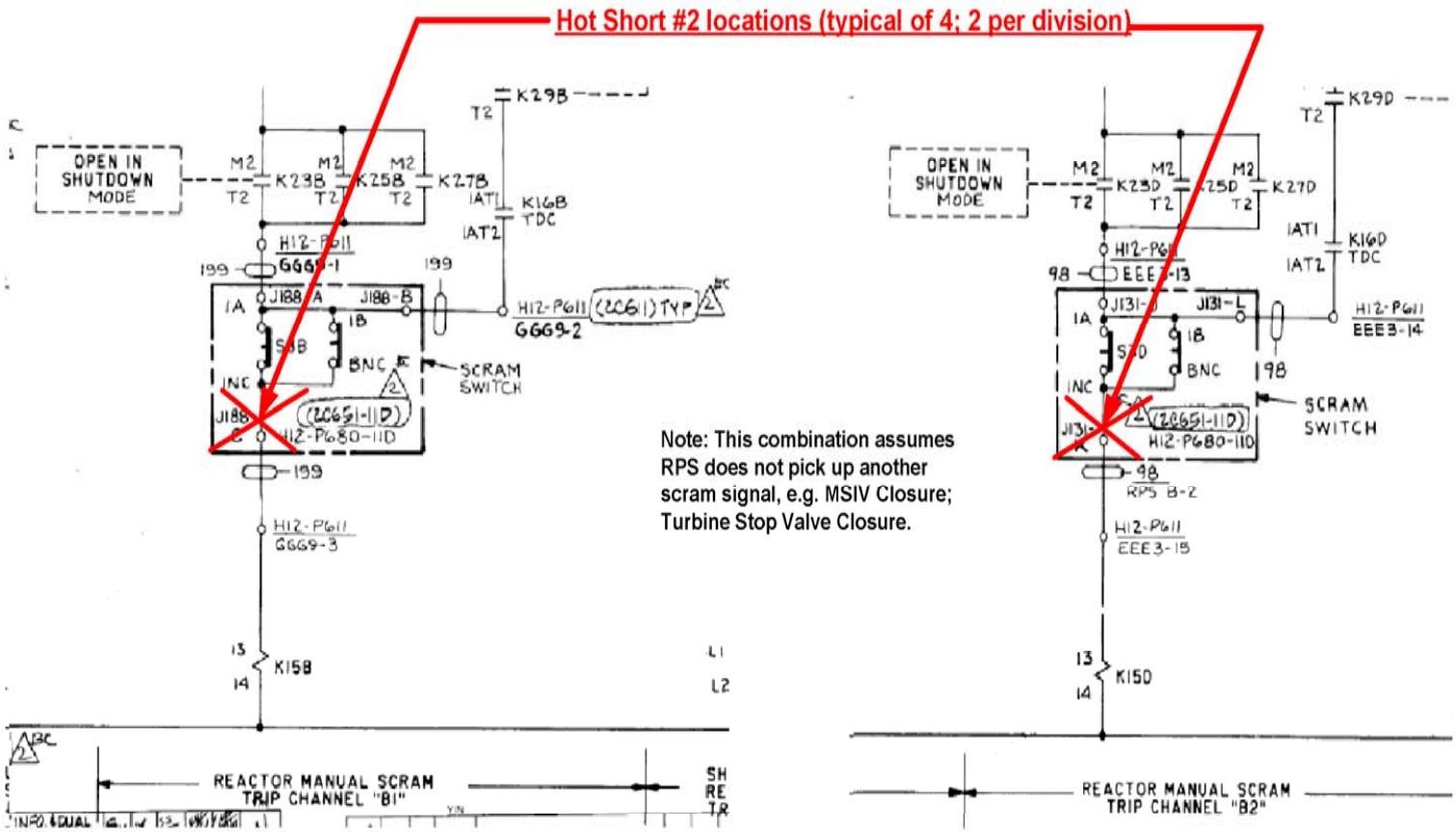

Figure 2 - Manual Scram Circuitry - Typical of two Trip Systems

BWROG Assessment of
NRC Information Notice 2007-07

Refer to Figure 4 for the remaining set of contacts that affect the automatic scram function

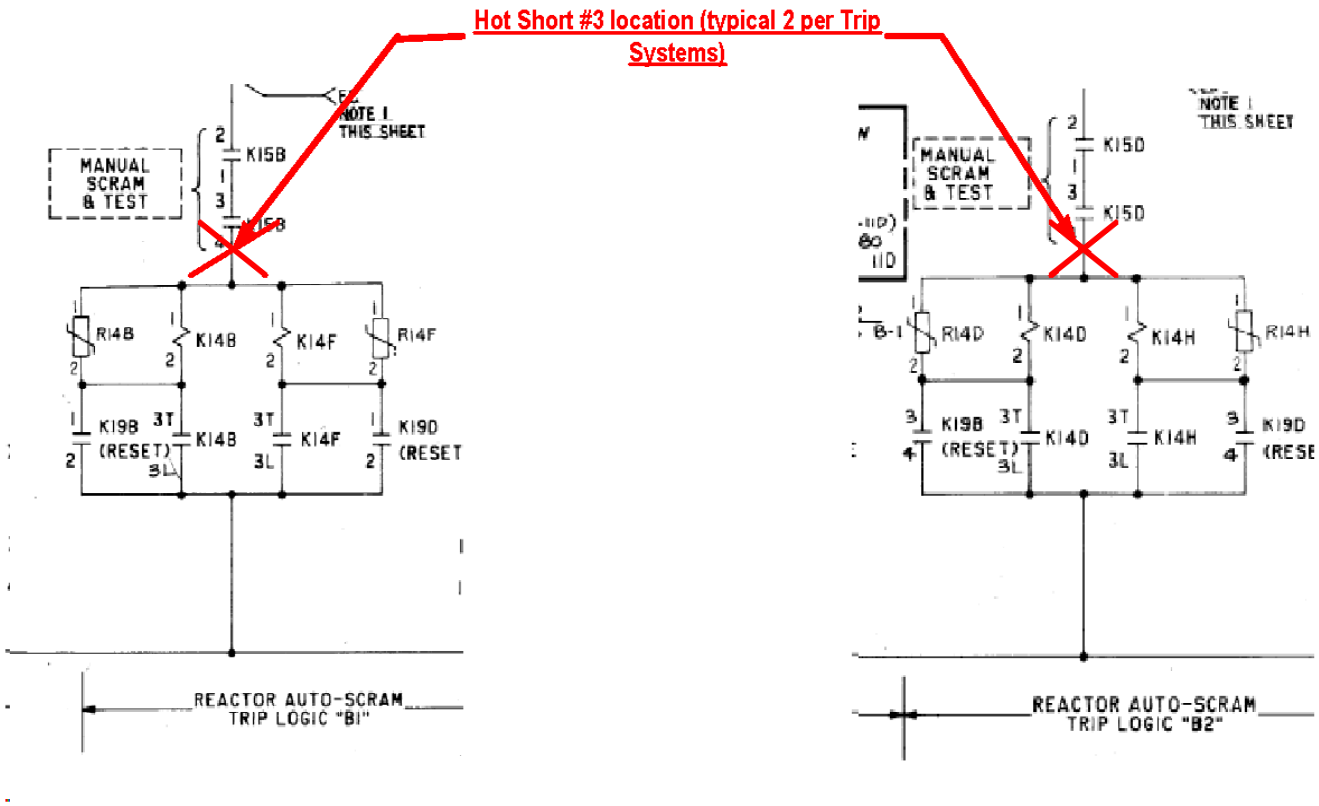

Figure 3 - Reactor Auto-Scram Circuitry - Typical of four Trip Channels in two Trip Systems

BWROG Assessment of
NRC Information Notice 2007-07

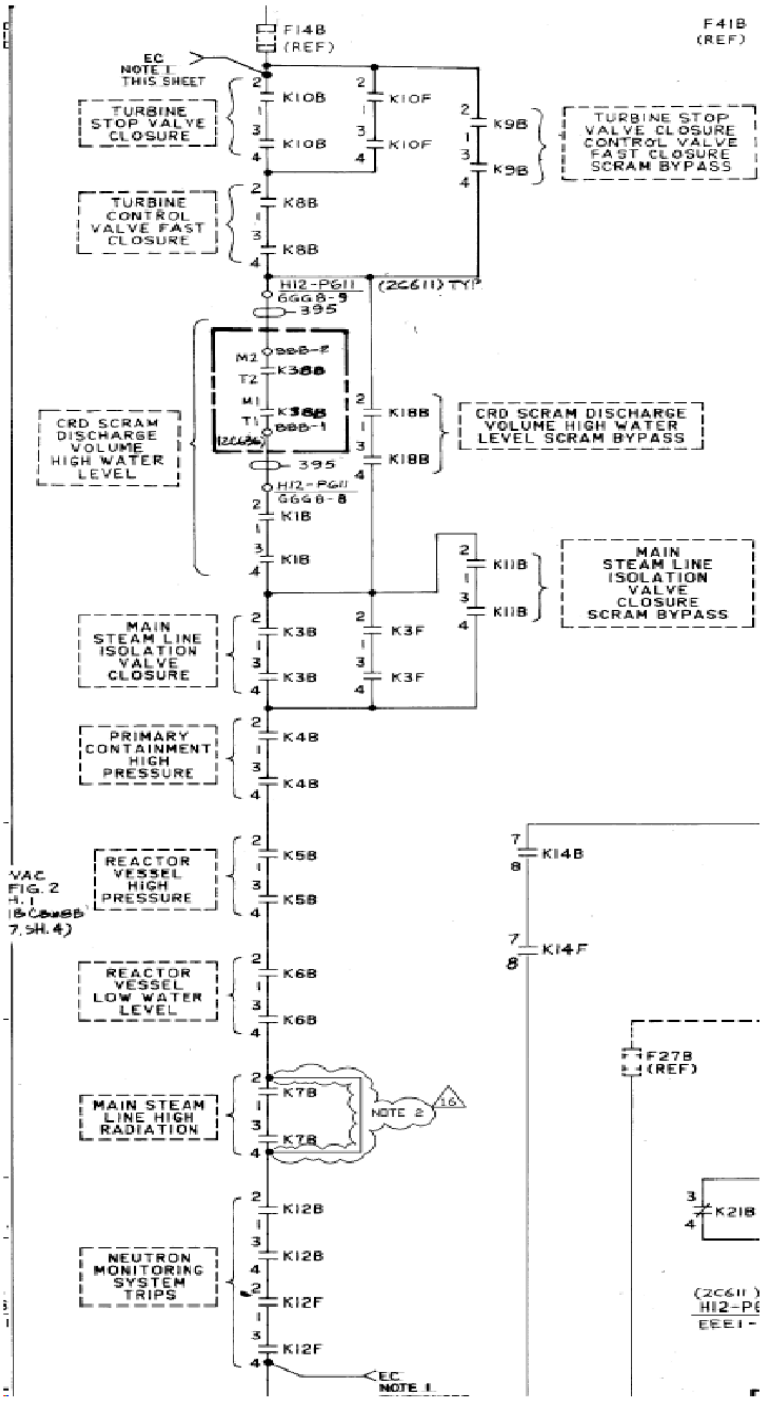

Figure 4- Balance of Auto-Scram Circuitry - (typical of 4 Trip Channels)