HITACHI

GE Hitachi Nuclear Energy

Richard E. Kingston
Vice President, ESBWR Licensing

P.O. Box 780 M/C A-65
Wilmington, NC 28402-0780
USA

T 910.675.6192
F 910.362.6192
rick.kingston@ge.com

MFN 10-041, Supplement 1 Docket No. 52-010

February 22, 2010

U.S. Nuclear Regulatory Commission
Document Control Desk
Washington, D.C. 20555-0001

Subject: **Transmittal of ESBWR DCD Tier 2, Chapter 5 Markups Related to GEH Internal Corrective Action – Additional Markups**

The purpose of this letter is to submit markups to the ESBWR DCD, Tier 2, Chapter 5, Revision 6, which are the result of GEH internal review. These markups will be incorporated into the DCD, Revision 7 and are in addition to those provided in Reference 1. The markup pages are contained in Enclosure 1. The changes are summarized below.

Affected Section(s)	Description of Change
Figure 5.1-4	Corrected Quality Group and Seismic Classification boundary definitions at the following locations: • FAPCS suppression pool suction for post-accident shutdown cooling • Supply to FAPCS containment cooling line for post-accident shutdown cooling • FAPCS reactor well supply to Train B, FAPCS side only Corrected Quality Group, Seismic Classification and building boundary definitions at the following locations: • Overboarding line to main condenser • Overboarding line to radwaste The legend was revised as necessary to support these changes.

Affected Section(s)	Description of Change
Section 5.3.5, Reference 5.3-1	Changed revision status and issue date consistent with NRC approved version.

If you have any questions or require additional information, please contact me.

Sincerely,

Richard E. Kingston

Richard E. Kingston
Vice President, ESBWR Licensing

Reference:

1. Transmittal of ESBWR DCD Tier 2, Chapter 5 Markups Related to GEH Internal Corrective Action, January 28, 2010

Enclosure:

1. Transmittal of ESBWR DCD Tier 2, Chapter 5 Markups Related to GEH Internal Corrective Action – Additional Markups – DCD Markups

cc:	AE Cubbage	USNRC (with enclosure)
	JG Head	GEH/Wilmington (with enclosure)
	DH Hinds	GEH/Wilmington (with enclosure)
	TL Enfinger	GEH/Wilmington (with enclosure)
	eDRF Section	0000-0114-1265 (first change)
		0000-0050-4376 (second change)

Enclosure 1

MFN 10-041, Supplement 1

Transmittal of ESBWR DCD Tier 2, Chapter 5 Markups Related to GEH Internal Corrective Action – Additional Markups

DCD Markups

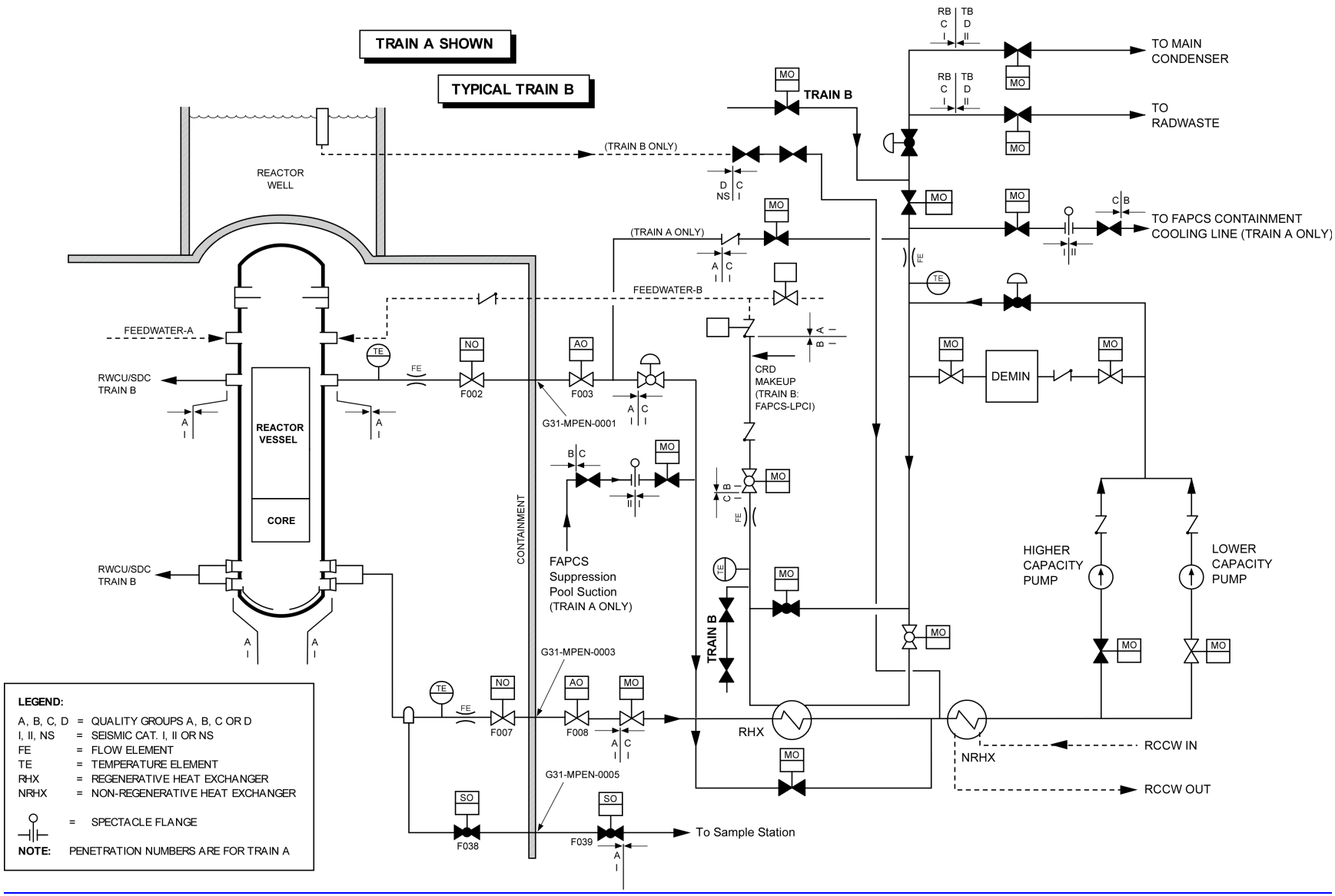
TRAIN A SHOWN
TYPICAL TRAIN B
REACTOR WELL
REACTOR VESSEL
CORE
FEEDWATER-A
RWCU/SDC TRAIN B
RWCU/SDC TRAIN B
(TRAIN B ONLY)
(TRAIN A ONLY)
FEEDWATER-B
TRAIN B
TO MAIN CONDENSER
TO RADWASTE
TO FAPCS CONTAINMENT COOLING LINE (TRAIN A ONLY)
CRD MAKEUP (TRAIN B: FAPCS-LPCI)
DEMIN
HIGHER CAPACITY PUMP
LOWER CAPACITY PUMP
CONTAINMENT
G31-MPEN-0001
G31-MPEN-0003
G31-MPEN-0005
FAPCS Suppression Pool Suction (TRAIN A ONLY)
F002
F003
F007
F008
F038
F039
RHX
NRHX
RCCW IN
RCCW OUT
To Sample Station
LEGEND:
A, B, C, D = QUALITY GROUPS A, B, C OR D
I, II, NS = SEISMIC CAT. I, II OR NS
FE = FLOW ELEMENT
TE = TEMPERATURE ELEMENT
RHX = REGENERATIVE HEAT EXCHANGER
NRHX = NON-REGENERATIVE HEAT EXCHANGER
= SPECTACLE FLANGE
NOTE: PENETRATION NUMBERS ARE FOR TRAIN A

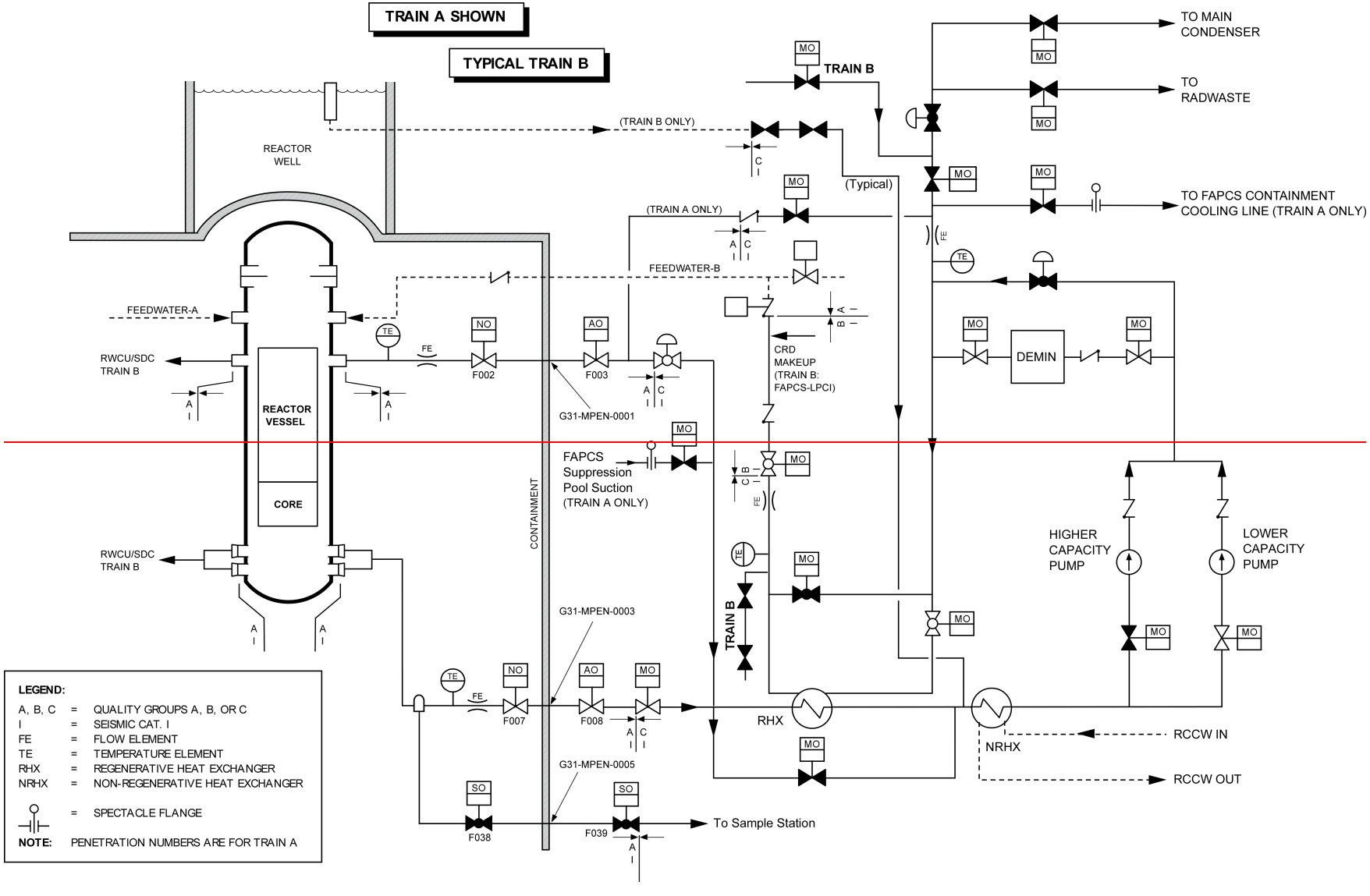

Figure 5.1-4. Reactor Water Cleanup/Shutdown Cooling System Schematic

5.3.4 COL Information

5.3-1-A Pressure/Temperature Limits and Fracture Toughness Data (Deleted)

5.3-2-A Materials and Surveillance Capsule

The COL Applicant will develop a description of the reactor vessel material surveillance program and milestones per Subsection 5.3.1.8.

5.3.5 References

5.3-1 GE Nuclear Energy, "GE Methodology to RPV Fast Neutron Flux Evaluations," Licensing Topical Report NEDC-32983P-A, Revision 2, Class III (Proprietary), ~~August 2000~~January 2006, and NEDO-32983-A, Revision 2, Class I (Non-proprietary), ~~December 2001~~January 2006.