INFORMATION ONLY

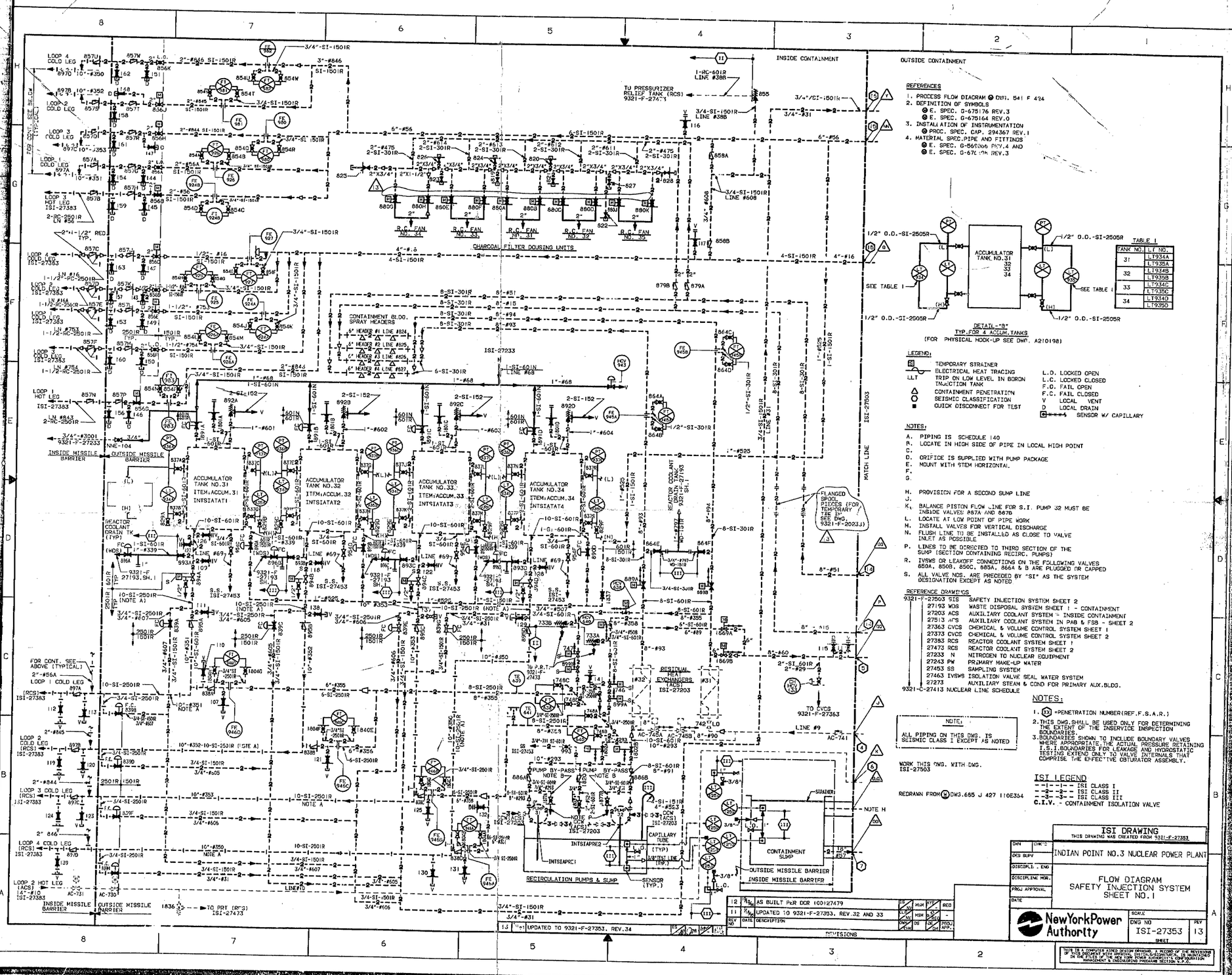

APERTURE CARD

9812160265