SEISMIC EVALUATION REPORT

VERIFICATION OF THE SEISMIC ADEQUACY OF MECHANICAL AND ELECTRICAL EQUIPMENT IN OPERATING REACTORS IN RESPONSE TO NRC GENERIC LETTER 87-02/UNRESOLVED SAFETY ISSUE (USI) A-46

FOR THE

INDIAN POINT NUCLEAR GENERATING STATION UNIT NO. 3

Prepared For The

NEW YORK POWER AUTHORITY
123 MAIN STREET
WHITE PLAINS, NEW YORK 10601

Docket Number: 50-~~333~~ 286
Report Number 18904-01, Rev 0

Atometrics, Incorporated
2 Crosfield Avenue
West Nyack, New York 10994

9511200268 951116
PDR ADOCK 05000286
P PDR

ATOMETRICS

SEISMIC EVALUATION REPORT

VERIFICATION OF SEISMIC ADEQUACY OF MECHANICAL AND ELECTRICAL EQUIPMENT IN OPERATING REACTORS IN RESPONSE TO NRC GENERIC LETTER 87-02/UNRESOLVED SAFETY ISSUE (USI) A-46

FOR THE

INDIAN POINT NUCLEAR GENERATING STATION
UNIT NO. 3

Preparer: _____ Date: 10/23/95
Jon E. Thompson
Atometrics, Inc.

Reviewer: _____ Date: 10/23/95
Michael Levine
Atometrics, Inc.

NEW YORK POWER AUTHORITY

DOCUMENT REVIEW STATUS

STATUS NO:

1 ☒ ACCEPTED
2 ☐ ACCEPTED AS NOTED RESUBMITTAL NOT REQUIRED
3 ☐ ACCEPTED AS NOTED RESUBMITTAL REQUIRED
4 ☐ NOT ACCEPTED

Permission to proceed does not constitute acceptance or approval of design details, calculations, analysis, test methods or materials developed or selected by the supplier and does not relieve supplier from full compliance with contractual negotiations.

REVIEWED BY: [illegible] TITLE: SR PROJ ENGR

DATE: 11/13/95

No. 100,216

ATOMETRICS

EXECUTIVE SUMMARY

PURPOSE

This report, together with the Relay Evaluation Report (RER), Report 18904-00, Rev. 0, Safe Shutdown Equipment Selection and Relay/Contact Evaluations for the Seismic Verification of Equipment in Response to Unresolved Safety Issue (USI) A-46 for the Indian Point Nuclear Generating Station Unit No. 3, documents the evaluations performed to address Unresolved Safety Issue (USI) A-46 at the Indian Point Nuclear Generating Station Unit 3 (IP-3) using the Generic Implementation Procedure (GIP) developed by the Seismic Qualification Utility Group (SQUG).

BACKGROUND

The requirements for seismic design of nuclear power plants have evolved over the years from the application of commercial building codes earlier in the 1960's, to more sophisticated methods being used today. In view of the extent of these changes in design requirements, the NRC initiated Unresolved Safety Issue USI A-46, "Seismic Qualification of Equipment in Operating Plant," in December 1980.

In early 1982, the Seismic Qualification Utility Group (SQUG) was formed to develop cost effective means of verifying the seismic adequacy of equipment in operating plants. The results of the industry efforts in this area, have culminated in the issuance of Revision 2 of the Generic Implementation Procedure (GIP) and a number of supporting documents and reports.

Subsequently the USNRC has documented its review of the GIP in Supplemental Safety Evaluation Report No. 2 and issued Supplement No. 1 to Generic Letter (GL) 87-02. New York Power Authority (NYPA) provided their response to GL 87-02 in a letter dated September 22, 1992, outlining their proposed schedule and approach. The USNRC subsequently approved the approach and schedule in a letter dated November 18, 1992.

SCOPE AND METHOD

The essential features of the SQUG approach, for the resolution of A-46, are the use of earthquake experience data, generic equipment qualifications, and fragility test data. To use these sources of data, SQUG and EPRI have collected and organized the associated information and have developed guidelines and criteria for its use. The GIP summarizes the technical approach and provides detailed implementation and documentation requirements for the application

of experience data to verify the seismic adequacy of the safe shutdown equipment.

The five (5) major steps used to identify and evaluate plant equipment for seismic adequacy are:

- Selection of Safe Shutdown Systems
- Identification of Safe Shutdown Equipment
- Perform Relay Evaluations to determine the effects of contact chatter
- Screening Verification and Walkdown
- Outlier Identification and Resolution

The selection of the safe shutdown systems, the identification of the associated equipment, the relay reviews, and the identification of relay outliers is documented in the RER. The list of equipment selected to be evaluated is contained in the Safe Shutdown Equipment List (SSEL) provided in Appendix A of the RER. The SSEL was reviewed and approved by the IP-3 Operations Department as required by the GIP. Their review is documented in Appendix J of the RER.

The screening verification, walkdown, and outlier identification was performed by a Seismic Review Team (SRT) comprised of Seismic Capability Engineers as defined in the GIP. These SRT members were required to exercise sound engineering judgment during the Screening Verification and Walkdown, therefore, the selection and training of qualified Seismic Capability Engineers for participation on the SRTs was an important element of the A-46 program. The results of this effort are documented in this report.

PROJECT TEAM

Implementation of the GIP requirements at IP-3 was performed by two (2) Seismic Review Teams (SRTs) comprised of Messrs Harry Johnson, P.E., Paul Smith, P.E. and NYPA seismic capability engineers Arun Pal, P.E. and Mara Lakis. Resumes of the SRT members are provided in Appendix A. Mr. Priit Okas was the NYPA Project Manager.

A peer review was conducted by Messrs Donald La Francois and William Henries of Yankee Atomic. Their report is provided in Appendix B.

RESULTS

The SSEL, documented in the RER, provided the basis for performing the relay reviews and preparing for and scheduling the seismic screening walkdowns. These evaluation resulted in:

- 624 Components requiring Relay Review, and
- 603 Components to be Seismically Verified (walked down).

The relay reviews resulted in the identification of 553 essential relays, those relays/contacts for which contact chatter was not acceptable. These reviews also resulted in identifying thirty four (34) operator actions and twelve (12) relay outliers (three (3) Westinghouse relay models used in twelve (12) locations). The operator actions are identified in the Relay List provided in Appendix F of the RER and were reviewed and approved by the IP-3 Operations Department. The relay outliers are described on Outlier Seismic Verification Sheets (OSVSs) provided in Appendix H of the RER.

The 603 separate mechanical and electrical components walked down during the seismic verification effort are documented on individual Screening Evaluation Work Sheets (SEWS). The results are further condensed and summarized on Screening Verification Data Sheets (SVDS). In general, the plant equipment was found to be adequately anchored and seismically rugged.

Cable Tray and Conduit Raceway reviews were conducted on an area basis and samples were selected for Limited Analytical Reviews (LARs). The reviews were documented on Plant Area Summary Sheets (PASSs) and Analytical Review Data Sheets and associated calculations were prepared to document the LARs.

Outliers were identified as a result of the equipment screening effort. All outliers are documented on Outlier Seismic Verification Sheets (OSVS) in accordance with the GIP. All outliers were reviewed to determine compliance with design documentation, and when deviations were found the plant procedures were followed to identify and resolve the noted conditions. None of the outliers identified were found to violate the design basis.

The evaluation resulted in identifying 64 mechanical and electrical equipment outliers requiring resolution. Four (4) components were inaccessible due to being located in high radiation areas. The remaining sixty component outliers ranged from interaction concerns to anchorage not meeting GIP criteria. Twenty five (25) outliers have been resolved. All these outliers and their resolution status are summarized in Table 1.

The documentation for the verification of the cable and conduit raceway inclusion rules is provided on the Plant Area Summary Sheets (PASSs) in Appendix E. The PASS sheets for the Containment areas, the 35'-0" elevation of the Piping Penetration area, and the Control Room were not completed at the time the areas were walked down to select the worst case supports for the Limited Analitical Reviews (LARs). The documentation for these areas has been identified as an outlier and their resolution status is also

included in Table 1. As a result of the LARs, no cable tray or conduit raceway supports were found to be outliers.

As discussed above, the results of the walkdowns are documented on various forms provided in the appendices of this report. These forms are:

1. Screening Evaluation Work Sheets (SEWS). These sheets were prepared for each piece of equipment evaluated and provides a checklist of all the concerns that were reviewed during the walkdown. These sheets are maintained in NYPA's Document Control Center and are referenced here as Appendix H.

2. Screening Verification Data Sheets (SVDSs). These sheets summarize the data provided on the SEWS and are included in Appendix D of this report.

3. Plant Area Summary Sheets (PASSs). These sheets provided the checklist of concerns reviewed during walkdown of the various areas of the plant to evaluate the cable trays and conduit raceways. These sheets are provided in Appendix E.

4. Analytical Review Summary Sheets. These sheets summarize the selected cable tray and conduit raceway supports selected for the Limited Analytical Review (LAR). The LAR is a calculation prepared to document the seismic adequacy of the cable tray and conduit raceway supports and was performed in accordance with the GIP. These reviews are provided in Appendix F.

5. Outlier Seismic Verification Sheets (OSVSs). These sheets document the outliers identified during the walkdowns and provide a recommended resolution. These forms are provided in Appendix G.

TABLE OF CONTENTS

SECTION	TITLE	PAGE
1.0	INTRODUCTION	1
2.0	SCOPE/METHOD	1
3.0	PLANT DESCRIPTION AND DESIGN BASIS	3
4.0	RESULTS	9
5.0	REFERENCES	13
6.0	LIST OF ABREVIATIONS	15

APPENDIX

APPENDIX A	Resumes and Training Records of Seismic Review Team Personnel
APPENDIX B	Peer Review Report
APPENDIX C	Response Spectra
APPENDIX D	Screening Verification Data Sheet (SVDS)
APPENDIX E	Cable Tray and Conduit Raceway Plant Area Summary Sheets (PASSs)
APPENDIX F	Cable Tray and Conduit Raceway Limited Analytical Reviews (LARs)
APPENDIX G	Outlier Seismic Verification Sheets (OSVSs)
APPENDIX H*	Screening Evaluation Work Sheets (SEWSs)

(*) Designates appendices not included in the NRC Submittal

TABLE OF CONTENTS

LIST OF FIGURES

FIGURE	TITLE	PAGE
Figure 1	IP-3 Plant Layout	18
Figure 2	IP-3 Site Profile	19

LIST OF TABLES

TABLES	TITLE	PAGE
Table 1	Outlier Summary	20

1.0 INTRODUCTION

The requirements for seismic design of nuclear power plants have evolved over the years from the application of commercial building codes earlier in the 1960's, to more sophisticated methods being used today. In view of the extent of these changes in design requirements, the NRC initiated Unresolved Safety Issue USI A-46, "Seismic Qualification of Equipment in Operating Plant," in December 1980.

In early 1982, the Seismic Qualification Utility Group (SQUG) was formed to develop cost effective means of verifying the seismic adequacy of equipment in operating plants. The results of the industry efforts in this area, have culminated in the issuance of Revision 2 of the Generic Implementation Procedure (GIP), Reference 5.2.1, and a number of supporting documents and reports. Subsequently the USNRC has documented its review of the GIP in Supplemental Safety Evaluation Report No. 2 (SSER-2), Reference 5.1.1, and issued Supplement No. 1 to Generic Letter (GL) 87-02, Reference 5.1.2. New York Power Authority (NYPA) provided their response to GL87-02 in a letter dated September 22, 1992, Reference 5.1.3, outlining their proposed schedule and approach.

The objective of this report is to provide the necessary documentation of the seismic verification portion of the A-46 effort at the Indian Point 3 Plant referred to hereafter as IP-3. It consolidates the documentation required for the Seismic Evaluation Report.

This report, together with the Relay Evaluation Report (RER), Report 18904-00, Rev. 0, Safe Shutdown Equipment Selection and Relay/Contact Evaluations for the Seismic Verification of Equipment in Response to Unresolved Safety Issue (USI) A-46 for the Indian Point Nuclear Generating Station Unit No. 3, provides the complete documentation of the evaluations performed to address Unresolved Safety Issue (USI) A-46 at IP-3.

2.0 SCOPE/METHOD

The primary objective of the A-46 program at IP-3, is to verify the seismic adequacy of mechanical and electrical safe shutdown equipment. As discussed in Reference 5.1.3, NYPA intends to comply with the SQUG commitments set forth in GIP, including the clarifications, interpretations, and exceptions identified in SSER-2, at IP-3.

The essential features of the SQUG approach, for the resolution of A-46, are the use of earthquake experience data, generic equipment qualifications, and fragility test data. To use these sources of data, SQUG and EPRI have collected and organized the associated information and have developed guidelines and criteria for its use. The GIP summarizes the technical approach and provides detailed implementation and documentation requirements for the application of experience data to verify the seismic adequacy of the safe shutdown equipment.

Implementation of the seismic verification portion of the GIP requirements at IP-3 was performed by two (2) Seismic Review Teams (SRTs) comprised of Messrs Harry Johnson, P.E., Paul Smith, P.E. and NYPA seismic capability engineers. Resumes of the SRT members are provided in Appendix A.

The peer review was conducted by Messrs Donald La Francois and William Henries of Yankee Atomic. The peer reviewers noted the experience of the SRTs as a strength in the IP-3 program, and that walkdowns were performed in accordance with the GIP. They also noted that field reviews were done properly and conservatively, and that outliers were properly identified. Their report is provided in Appendix B.

The GIP approach for verifying the seismic adequacy of mechanical and electrical equipment is consistent with Generic Letter 87-02, including NUREG-1030, Reference 5.1.4, and NUREG-1211, Reference 5.1.5.

The five (5) major steps used to identify and evaluate plant equipment for seismic adequacy are:

- Selection of Safe Shutdown Systems
- Identification of Safe Shutdown Equipment
- Perform Relay Evaluations to determine the effects of contact chatter
- Screening Verification and Walkdown
- Outlier Identification and Resolution

Several types of individuals, their qualifications, and their responsibilities for implementing this procedure are described in Part II, Section 2, of the GIP. These individuals include: (1) Systems Engineers who identify the methods and the equipment needed

for bringing the plant to a safe shutdown condition, (2) Plant Operations Personnel who have a comprehensive understanding of the plant layout and the function and operation of the equipment and systems in the plant and who compare the plant operating procedures to the safe shutdown equipment list for compatibility, (3) Seismic Capability Engineers who perform the Screening Verification and Walkdown of the safe shutdown equipment, and (4) Relay Evaluation Personnel who perform the relay functionality review.

The selection of the safe shutdown systems, the identification of the associated equipment, and the relay reviews are documented in a separate Relay Evaluation Report (RER) entitled "Safe Shutdown Equipment Selection and Relay\Contact Evaluations for the Seismic Verification of Equipment in Response to USI A-46", Reference 5.3.1. The list of equipment selected to be evaluated is contained in the Safe Shutdown Equipment List (SSEL) provided in Appendix A of the referenced RER. The SSEL was reviewed and approved by the IP-3 Operations Department as required by the GIP. Their review is documented in Appendix J of the RER. The RER provides, by reference or as attachments, additional documentation associated with this Seismic Evaluation Report (SER).

The screening verification, walkdown, and outlier identification was performed by a Seismic Review Team (SRT) comprised of Seismic Capability Engineers as defined in the GIP. These SRT members exercised sound engineering judgment during the Screening Verification and Walkdown, therefore the selection and training of qualified Seismic Capability Engineers for participation on the SRTs was an important element of the A-46 program.

The SSEL, documented in the RER, provided the basis for preparing for and scheduling the seismic screening walkdowns. These evaluation resulted in the identification of 603 components to be Seismically Verified (walked down). The mechanical and electrical components walked down during the seismic verification effort are documented on individual Screening Evaluation Work Sheets (SEWS), Appendix H.

3.0 PLANT DESCRIPTION AND DESIGN BASIS

3.1 General Plant Description

Indian Point 3 uses a pressurized water reactor. The plant was licensed to produce 3,025 megawatts of thermal power, with a corresponding turbine generator electrical output of 965 megawatts.

Westinghouse Electric Corp. was the primary contractor and had turn key responsibility for the design, construction, testing, and initial start-up of the facility. Westinghouse contracted the services of United Engineers and Constructors, Inc. as architect-engineer to provide engineering assistance in the design and construction of the plant. A Facility Operating License was issued on December 12, 1975.

The plant incorporates a 4-loop, closed cycle, pressurized water nuclear steam supply system, a turbine generator and the necessary auxiliaries. A radioactive waste disposal system, fuel handling system and all auxiliaries, structures, and other on-site facilities required for a complete and operable nuclear power plant are provided.

A site plot plan is provided in Figure 1. Figure 2 provides a profile of the site. Based on Figure 2, the following is a list of the grade elevations for the various buildings at the site:

Control Building (CB)	15'-0"
Diesel Generator Building (DGB)	15'-0"
Auxiliary Feed Pump Building (AFPB)	18'-0"
Fan House Building/Fan Room (FR)	15'-0"
Primary Auxiliary Building (PAB)	15'-0"
Turbine Building (TB)	15'-0"
Containment (VC)	46'-0"

3.2 Site Location

Indian Point 3 is located adjacent to and south of Indian Point 1 on a site of approximately 235 acres of land on the east bank of the Hudson River at Indian Point, Village of Buchanan in upper Westchester County, New York. The Indian Point 2 plant is adjacent to and north of Indian Point 1. The site is about 24 miles north of the New York City boundary line. The nearest city is Peekskill, 2.5 miles northeast of Indian Point.

3.3 Site Geology and Seismology

Geologically, the site consists of a hard limestone formation in a jointed condition which provides a solid bed for the plant foundation. The bedrock is sufficiently sound to support any loads which could be anticipated up to 50 tons per square foot, which is far in excess of any load which may be imposed by the plant. Although it is hard, the jointed limestone formation is permeable to water.

Seismic activity in the Indian Point area is rare and no damage has resulted therefrom. As stated in Section 2.8 of the UFSAR, Reference 5.2.2, the site is "practically non-seismic" and is "as safe as any area at present known". Notwithstanding such assurance, the safety related equipment, components and structures of the plant were designed to withstand an earthquake of the highest intensity which can reasonably be predicted from geologic and seismic evidence developed for the site.

3.4 Structures

The major structures are the Reactor Containment Building, the Auxiliary Building, the Control Building, the Turbine Building, the Administration Building, the Outage Support Building, the Training Building and the Condensate Polisher Building.

The reactor containment is a steel lined reinforced concrete cylinder with a hemispherical dome and a flat base. The containment is designed to withstand the internal pressure accompanying a loss-of-coolant accident. It is virtually leaktight and provides adequate radiation shielding for both normal operation and accident conditions.

Continuously pressurized double containment is provided at all liner seams and penetrations including access openings and ventilation ducts.

When required, the containment isolation valve seal water system permits automatic rapid sealing of pipes which penetrate the containment so that, in the event of any loss-of-coolant accident, there will be no leakage from containment to the environment.

Ground accelerations for the operational basis earthquake used for Containment design purposes and for all Seismic Class I structures are 0.1g applied horizontally and 0.05g applied vertically. In addition, ground accelerations for the design basis earthquake of 0.15g horizontal and 0.10g vertical were used to analyze the loss-of-function concept.

The Containment, Primary Auxiliary Building, Spent Fuel Pit and the Control Building are Seismic Class I structures. The Turbine Building is a Seismic Class III structure modified in accordance with the design basis earthquake criteria to preclude collapse or other damage to nearby Class I structures.

Detailed description of the regional geology and that of the surrounding area is provided in section 2.7 of the UFSAR.

3.5 Plant Seismic Design Basis

Geographic areas of the continental United States have been subdivided into regions of known or assigned seismic probability or risk and this has served as a useful basis for generating code provisions for earthquake - resistant structures. The Seismic Risk Map adopted by the International Conference of Building Officials for inclusion in the 1970 edition of Uniform Building Code, divides the United States into four (4) major zones of seismic risk or probability. The Indian Point Site is located in Zone I of this map with intensities limited to V and VI on the Modified Mercalli Intensity Scale of 1931 and only slight earthquake activity can be expected.

However, the Indian Point 3 facility was actually built per requirements of Zone 2 of the Uniform Building Code i.e., corresponding to an intensity VII of the Modified Mercalli Scale. The range of expected horizontal acceleration of ground motion for earthquakes of this intensity is 70-150 cm/sec2 near the epicenter or about 0.15g max. At a distance of 100 miles from the epicenter, the acceleration drops to 50%. The nearest event larger than intensity VII occurred near Cape Ann, Massachusetts, a distance of more than 200 miles from the site, in 1755. This event was classified as intensity VIII on the Modified Mercalli Scale. It was believed, therefore, that the plant's structural design, allowing for safe shutdown in the event of an earthquake of intensity VII on the Modified Mercalli Scale, was adequate. A list of known earthquakes which have occurred in the vicinity of the plant having intensities of V through VII on the modified Mercalli Scale is provided by Table 2.8.1 of the UFSAR.

3.6 Original Design Basis Seismic Input

The seismic response associated with the free field ground at the IP-3 site is based on average acceleration, velocity, and displacement curves presented in TID-7024. These curves are associated with the Housner shape spectra.

For design purposes, the spectral shapes are normalized to the site specific ground acceleration values for the Operating Basis Earthquake (OBE, 0.1g horizontal) and Design Basis Earthquake (DBE, 0.15g horizontal). The vertical ground acceleration components were defined as 0.05g for the OBE and 0.1g for the DBE.

3.7 Original Design and Analysis of Structures

The major Seismic Class I Buildings and Structures (SBS) at IP-3 are the Containment Structure, Inner Containment Structure, Primary Auxiliary Building, Control and Diesel Generator Buildings, Fan House Building, Intake Structure, Spent Fuel Pit, and the Shield Wall.

Seismic analyses of the SBS were performed to obtain the responses, accelerations, displacements and internal forces of the structures due to the design seismic ground motion. The results were used to design and/or to verify the design of the structures. In addition, floor response spectra at various elevations of the buildings and structures were developed for design of components and systems and for qualification of equipment.

The SBS were modeled as lumped mass structural systems in either of two ways: planar models excited in their plane, with each mass point having three degrees of freedom consisting of vertical and horizontal displacements and a rotation normal to the plane of the models or, a planar grid model which is excited in a direction normal to the grid, with each mass having three degrees of freedom consisting of a normal displacement and two rotations representing angular motion about perpendicular axes in the plane of the grid. The seismic methodology used represented the state-of-the-art available at the time.

Time history analyses were performed using a synthesized time history whose response spectra enveloped the site design response spectra defined by a Housner type ground response spectra shape. This time history was developed specifically for IP-3 by Blume Associates based on a modified Taft earthquake.

Horizontal floor response spectra were developed using the dynamic building models and the synthesized time history. Containment Structure and Inner Containment Structure response spectra were developed for both the DBE and OBE. For all other structures, only the DBE floor response spectra were developed. It was not necessary to generate separate OBE floor response spectra for the other buildings and/or structures since they have the same OBE and DBE structural damping. The OBE horizontal response spectra for these buildings and structures were defined as two-thirds of the DBE horizontal response spectra since the OBE peak horizontal ground acceleration is two-thirds of the DBE peak horizontal ground acceleration (0.1g vs. 0.15g). Floor response spectra were developed for the OBE and DBE using equipment damping ratios of 1/2, 1, 2, and 5 percent.

Vertical response was assumed to be amplified to the same degree as horizontal motions in determining floor motions. No frequency shift was considered. The resultant DBE vertical floor response spectrum values were defined as two-thirds of those values determined for the DBE horizontal floor response. The resultant OBE vertical floor response spectrum values were defined as one-half of those values determined for the OBE horizontal floor response. This assumption, concerning vertical response, was consistent with the licensing position taken for nuclear plants of this vintage. One exception to this position was that vertical response spectra were specifically developed for the Containment Structure. This was a special analysis activity requested in August 1972 to obtain more exact definition of vertical seismic loads to avoid modifications to existing hardware associated with the Containment spray header.

A detailed description of spectra generation for IP-3 was submitted to the NRC as requested by Generic Letter 87-02, Supplement No. 1.

3.8 Seismic Design Criteria for Equipment

Detailed descriptions of the seismic design criteria for structures and equipment are provided in Section 16 of the IP-3 UFSAR.

In general, seismic design analysis was performed for seismic Class I equipment. The criteria and methods of analysis are described in Section 16.1.3 of the UFSAR. Equivalent Static or Modal analyses were performed. Testing was also performed for some of the electrical equipment; No explicit guidance or standard was committed to for testing.

3.9 A-46 Seismic Input

The seismic input used in the A-46 effort is the same input used in the seismic analysis and design for IP-3 as described in section 3.7. Horizontal in-structure DBE spectra for 5% damping are used as the seismic input. The site DBE is a Housner Spectrum anchored to 0.15g.

In accordance with Reference 5.1.6, the IP-3 SSE response spectra has been accepted by the NRC as a "conservative design" spectra for the purpose of comparing seismic capacity to seismic demand at IP-3.

The seismic response spectra provided by NYPA, References 5.2.3, 5.2.4, and 5.2.5 were summarized and documented in Appendix I of the RER, Reference 5.3.1. Curves I-1 through I-19 are the

combination of site specific instructure response spectra (IRS) into curves to show the maximum horizontal acceleration, regardless of direction (E-W or N-S), in a single curve for each specified building and elevation. These curves summarize the Conservative Response Spectra (CRS) to be used for the seismic demand versus seismic capacity comparisons.

The response spectra provided in Appendix I of the RER were compared to the Seismic Capacity Bounding Spectra provided in the GIP, Section 4, Figure 4.2 page 4-12. The site specific SSE ground response spectra (5% damping) were compared to the Bounding Spectra. The floor response spectra were compared to 1.5x's the Bounding Spectra. These comparisons are provided in Appendix C of this report.

The 5% damping ground response spectra was enveloped by the Bounding Spectra and the In-structure Response Spectra were enveloped by 1.5Xs Bounding Spectrum (ABS) in all locations with the exception of the 70'-0" elevation of the Diesel Generator building, the 127'-6" elevation of the Inner Containment Pressurizer Shield Wall, and the 78'-0" elevation of the Auxiliary Boiler Feedwater Pump Building (AFPB). No SSEL equipment was found to be installed at the 70'-0" elevation of the Diesel Generator/Control Building or the 127'-6" elevation of the Inner Containment Pressurizer Shield Wall locations. The response spectra for the 78'-0" elevation of the AFPB was taken from the Shield Wall Building (SWB) which was the most conservative. The SWB peak is 1.24g's at a frequency of 2.9Hz to 3.35Hz. The peak for 1.5X's the Bounding Spectra is 1.2g's for this frequency range, therefore, the response spectra for the 78'-0" elevation of the AFPB was judged to be enveloped by 1.5X's the Bounding Spectra. The seismic demand (CRS) compared to seismic capacity (ABS) was, therefore, used exclusively for the seismic walkdown evaluations.

4.0 RESULTS

In general, the plant equipment was found to be adequately anchored and seismically rugged. The seismic screening of components is documented on Screening Evaluation Work Sheets (SEWS) in accordance with the requirements of the GIP, which are maintained in NYPA document control and are referred to here as Appendix H. The SEWS are sorted by equipment class. The results are further condensed and summarized on Screening Verification Data Sheets (SVDS), also sorted by class and provided in Appendix D.

The plant Cable Tray and Conduit Raceway reviews were conducted on an area basis and samples were selected for Limited Analytical

Reviews. The results of the reviews demonstrates the seismic adequacy of the raceway systems. The associated Plant Area Summary Sheets (PASSs) are provided in Appendix E and the Analytical Review Data Sheets including the Limited Analytical Review calculations are provided in Appendix F.

Outliers were identified as a result of the equipment screening effort. All outliers are documented on Outlier Seismic Verification Sheets (OSVS) and have been included as Appendix G. All outliers were reviewed to determine compliance with design documentation, and when deviations were found the plant procedures were followed to identify and resolve the noted conditions. None of the outliers identified were found to violate the design basis.

A general summary of the walkdown findings and the results is provided in the following subsections:

4.1 Equipment Screening and Walkdowns

Based on the result of the walkdowns and reviews performed by the SRTs the plant equipment was generally found to have adequate design details and installation; electrical cabinets were generally welded to embedded steel members, mechanical equipment were typically anchored with cast in place bolts, racks,tanks, and heat exchangers were typically anchored by expansion type anchors. Equipment data such as vendor drawings were generally available and retrieved using plant databases. The general housekeeping and II/I conditions in the plant were found to be satisfactory; all identified interactions were related to proximity concerns. All SSEL equipment with the exception of those listed in section 4.1.1 were walked down by at least two seismic capability engineers. Included in the SEWS are all applicable caveats, field notes, and anchorage evaluations. The majority of the anchorage calculations were performed using the ANCHOR program and are attached to the SEWS. As stated earlier the SVDS are included in Appendix D and provide an overall summary of the screening results.

4.1.1 Inaccessible Items

The components that were inaccessible during the walkdowns are:

1. CSAHRG1 — Regenerative Heat Exchanger 31
2. TE-126 — Regenerative Heat Exchanger 31 Flow Thermocouple Element
3. TE-1319 — Compensating Temperature Element
4. TE-1329 — Upper Tap Compensating Temperature Element

All four (4) components were located in High Rad areas. These components are listed in Table 1, Outlier Summary.

4.1.2 Cases Where the Intent of the Caveats are Met

Four (4) Motor Control Centers (MCCs) at IP-3 panels are 15" deep. These are narrower than allowed by the equipment class caveat, but were judged to meet the intent of the caveat based on additional reviews performed by the SRT.

Many of the motor operated valves had been previously evaluated as part of the GL89-10 MOV Weak Link Analysis. Based on this analysis, these valves were judged to meet the intent of the valve size/weight caveat.

Some tanks and heat exchangers were smaller in diameter than the minimum diameter identified in the GIP. These tanks were reviewed by the SRTs and judged to meet the intent of the GIP.

4.1.3 Seismic Interaction

The equipment screening evaluations included evaluation of potential seismic interaction concerns in accordance with the GIP. Those items of equipment that were determined to have a seismic interaction that did not meet GIP criteria were identified as outliers and are discussed in Section 4.4.

Equipment located near block walls that were considered a potential interaction concern were identified during the walkdown and evaluated. These block walls were reviewed for inclusion in the IP-3 80-11 Block Wall Seismic Evaluation Program, Reference 5.3.2. All block walls encountered during the walkdown that were identified as potential interaction concerns were found to be seismically adequate as a result of the 80-11 program. Therefore, all block walls were judged not to be interaction hazards and noted on the SEWS.

4.1.4 Equipment Anchorage

Equipment anchorage consisted of four (4) different types. These types are:

a. cast in place bolts (typically "J" bolts),
b. concrete expansion anchors,
c. welds to embedded steel, and
d. welds/bolting to structural steel.

Detailed information regarding specific equipment anchorage is included with the SEWS. Anchorage evaluations performed prior to the walkdown were verified during the walkdown to envelope the existing conditions. If the existing condition was not enveloped by the calculation, was different from the configuration that was analyzed, or was not analyzed prior to the walkdown, as-built information was obtained and the anchorage evaluation revisions incorporated into the SEWS. As necessary, appropriate anchor capacity reduction factors were applied. Anchorage not meeting the GIP criteria were identified as outliers and are discussed in Section 4.4.

Concrete expansion anchor bolt tightness checks were performed as a separate activity from the walkdown by station personnel. Seventy-five (75) components were selected to be checked. Sixty-three (63) (84%) were found to be acceptable, six (6) (8%) were inaccessible at the time of the activity, 3 were found to have loose nuts on at least one anchor, and 2 had missing nuts on at least one anchor (combined 7%). Station work orders were initiated for the equipment found to have loose or missing nuts and the conditions corrected. One (1) component was later deleted from the SSEL (Rack 8) as it did not support any equipment required for safe shutdown. The other equipment were identified as outliers and are discussed in Section 4.4.

4.2 Tanks and Heat Exchangers Evaluations

All tanks were evaluated using the GIP screening criteria. A few of the heat exchangers outside diameters were less than the twelve inch parameter established by the GIP. These heat exchangers were judged to meet the intent of the GIP and were evaluated using the same general methodology and acceptance criteria.

The three (3) large flat bottom storage tanks, Condensate Storage Tank (CST), Refueling Water Storage Tank (RWST) and Primary Water Storage Tank (PWST) did not meet the GIP screening criteria and were identified as outliers. The CST did not meet the anchor bolt chair stiffener thickness criteria, however, this was resolved by further engineering evaluation. The RWST and the PWST did not meet the GIP methodology evaluation criteria. These tanks are discussed in Table 1, Outlier Summary.

4.3 Raceways Evaluations

The raceway reviews were performed in accordance with Section 8 of the GIP. Raceways were walked down and checked for compliance with the inclusion rules and other seismic performance concerns as well

as seismic spatial interactions with adjacent equipment and structures.

The raceway reviews were performed separate of the equipment walkdown. The walkdowns were performed on an area basis and were selected by reviewing the plant layout drawings to identify plant areas where SSEL equipment is located and where equipment cabling is routed. The walkdown of the selected areas is documented on Plant Area Summary Sheets (PASSs) which are provided in Appendix E.

Eight (8) representative worst case supports were selected, as-built, and analyzed as part of the Limited Analytical Review (LAR). No outliers were found. These reviews are provided in Appendix F.

4.4 Description of Outliers

The equipment judged to be outliers as a result of this program are summarized in Table 1. Each piece of equipment is also described on individual Outlier Seismic Verification Sheets (OSVSs) provided in Appendix G.

5.0 REFERENCES

5.1 Codes, Standards and Regulatory Documents

5.1.1 Supplemental Safety Evaluation Report No. 2 (SSER No.2) on Revision 2 of the Generic Implementation Procedure (GIP-2), May 22, 1992.

5.1.2 USNRC Generic letter 87-02, Supplement 1, issued May 22, 1992.

5.1.3 NYPA letter No. IPN-92-043, Indian Point 3 Nuclear Power Plant, Docket No. 50-286, Response to Supplement No. 1 to Generic Letter 87-02, "Verification of Seismic Adequacy of Mechanical and Electrical Equipment in Operating reactors, Unresolved Safety Issue (USI) A-46," dated September 22, 1992.

5.1.4 NUREG-1030, "Seismic Qualification of Equipment in Operating Nuclear Power Plants, Unresolved Safety Issue A-46," U.S. Nuclear Regulatory Commission, Washington, D.C., February, 1987.

5.1.5 NUREG-1211, "Regulatory Analysis for Resolution of Unresolved Safety Issue A-46, Seismic Qualification of Equipment in Operating Plants," U.S. Nuclear Regulatory Commission, Washington, D.C., February 1987.

5.1.6 NRC letter, Docket No. 50-286, Response to Supplement No. 1 to Generic Letter (GL) 87-02 That Transmits Supplemental Safety Evaluation Report No. 2 (SSER No. 2) on Seismic Qualification Utility Group (SQUG) Generic Implementation Procedure, Revision 2, as Corrected February 14, 1992, (GIP) - Indian Point Nuclear Generating Unit No. 3 (TAC No. M69454), dated November 18, 1992, NYPA Records Management Services No. 268583.

5.2 Technical Criteria and Design Basis Documents

5.2.1 "Generic Implementation Procedure (GIP) for Seismic Verification of Nuclear Plant Equipment," Revision 2, as corrected on February 14, 1992.

5.2.2 NYPA, IP-3 Updated Final Safety Analysis Report.

5.2.3 NYPA Technical Report TR-7366-3, Rev. 0, Digitized Data By Period Design Response Spectra Database for Indian Point Unit No. 3 Nuclear Power Plant, Teledyne Engineering Services, March 22, 1991.

5.2.4 Indian Point Unit No. 3 Summary of Seismic Response Spectra Characteristics, Westinghouse Electric Corporation, Nuclear and Advanced Technology Division, Engineering Technology Department, Structural Engineering & Piping Technology, not dated.

5.2.5 Seismic Response Curves for Class 1 Buildings for Indian Point Generating Station Unit No. 3, Westinghouse Electric Corporation, PWR Systems Division, June 10, 1971.

5.3 Reports

5.3.1 Report 18904-00, Rev. 0. Safe Shutdown Equipment Selection and Relay/Contact Evaluations for the Seismic Verification of Equipment in Response to Unresolved Safety Issue (USI) A-46 for the Indian Point Nuclear Generating Station Unit NO. 3.

5.3.2 Report 6604-210, Indian Point 3 Nuclear Power Plant PASNY Work Authorization WAH-113 I.E. Bulletin 80-11 Masonry Wall Design, prepared by United Engineers & Constructors, Inc., File No. A-5.210, letter No. IUP-3397, dated October 31, 1980.

6.0 LIST OF ABREVIATIONS

AB/AFPB	Auxiliary Feed Pump Building
ACS	Auxiliary Cooling System
AF	Amplification factor
AFW	Auxiliary Feed Water System
CA	Chatter Acceptable
CB	Control Building
CCR	Central Control Room
CCW	Component Cooling Water System
Cond	Condensate System
CR	Corrective Action Required
CRD	Control Rod Drive System
CST	Condensate Storage Tank
CVCS	Chemical and Volume Control System
DBE	Design Basis Earthquake
DC	Direct Current System
DG	Diesel Generator Building
DNBR	Departure from Nuclear Boiling Ratio
EDG	Emergency Diesel Generator System
ET	Electrical Tunnel
FR	Fan Room
FW	Feed Water System
GAS	N2 and H2 Supply Systems
GERS	Generic Equipment Response Spectra
GIP	Generic Implementation Procedure
HVAC	Heating, Ventilation, and Air Conditioning System
IA	Instrument Air System
IRS	Instructure Response Spectra
LAR	Limited Analysis Review

6.0 LIST OF ABREVIATIONS (Cont'd)

MCC	Motor Control Center
MS	Main Steam System
NA	Not Applicable
NIS	Nuclear Instrumentation System
NV	Not Vulnerable
OA	Operator Action
OBE	Operating Basis Earthquake
OSVS	Outlier Seismic Verification Sheet
PA/PAB	Primary Auxiliary Building
PASS	Plant Area Summary Sheet
PORV	Power Operated Relief Valve
PP	Piping Penetration Area
PRT	Pressure Relief Tank
PSA	Peak Spectral Acceleration
PW	Primary Water System
PWST	Primary Water Storage Tank
RCS	Reactor Coolant System
RHR	Residual Heat Removal System
RSEF	Relay Screening and Evaluation Forms - Relay Tabulation
RVLIS	Reactor Vessel Level Indication System
RWST	Refueling Water Storage Tank
SBS	Seismic Class 1 Buildings and Structures
SER	Seismic Evaluation Report
SEWS	Screening Evaluation Work Sheet
SF	Safety Factor
SIS	Safety Injection System
SP	Sampling System
SQUG	Seismic Qualification Utility Group
SRT	Seismic Review Team
SSE	Safe Shutdown Earthquake
SSEL	Safe Shutdown Equipment List
SSER	Supplemental Safety Evaluation Report
SSRAP	Senior Seismic Review and Advisory Panel
SVDS	Screening Verification Data Sheet
SW/SWS/SWN	Service Water System
SWGR	Switchgear
TB	Turbine Building

6.0 LIST OF ABREVIATIONS (Cont'd)

UFSAR	Updated Final Safety Analysis Report
USI	Unresolved Safety Issue
VC	Containment Building
YD	Yard

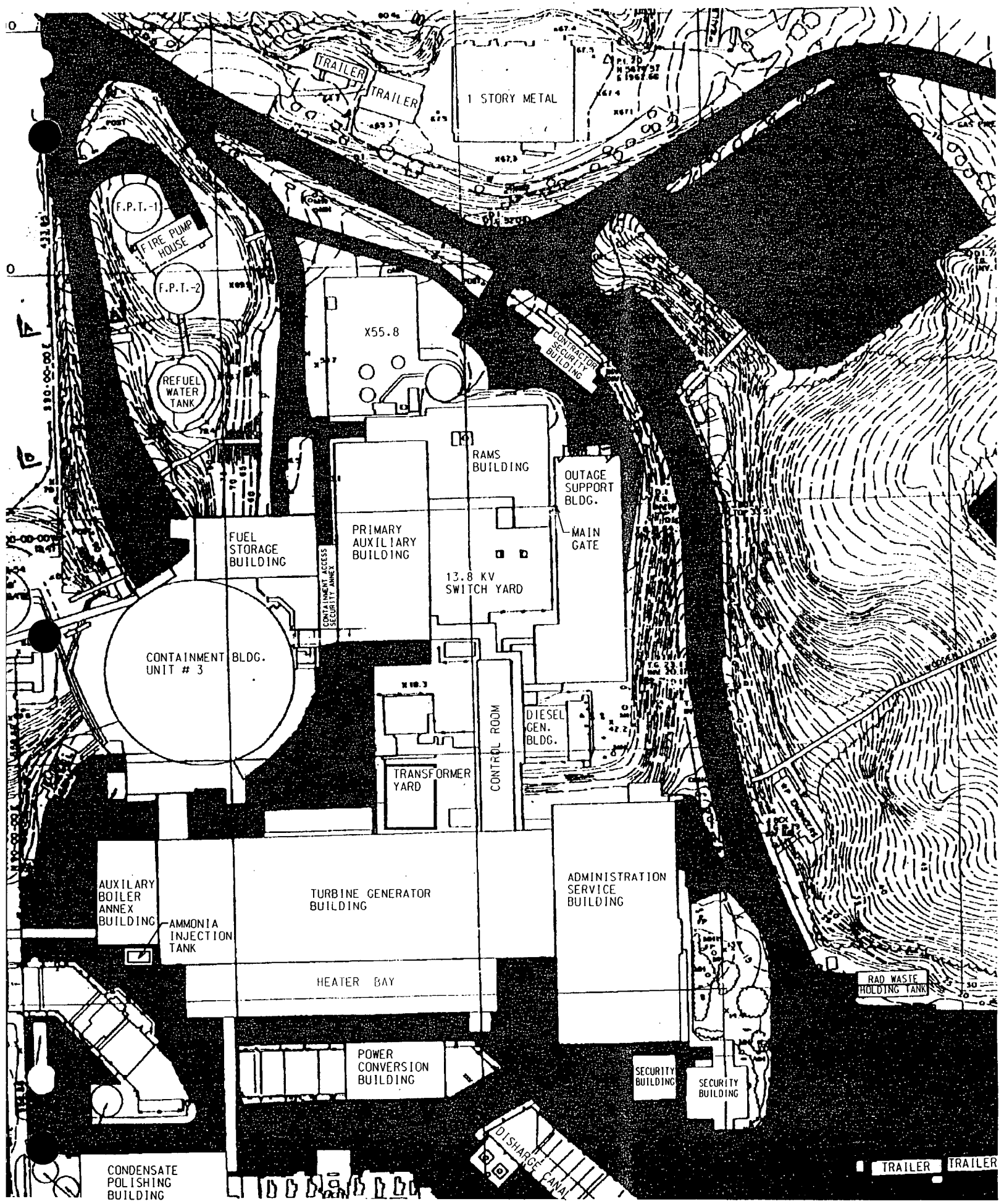

FIGURE 1
SITE PLOT PLAN

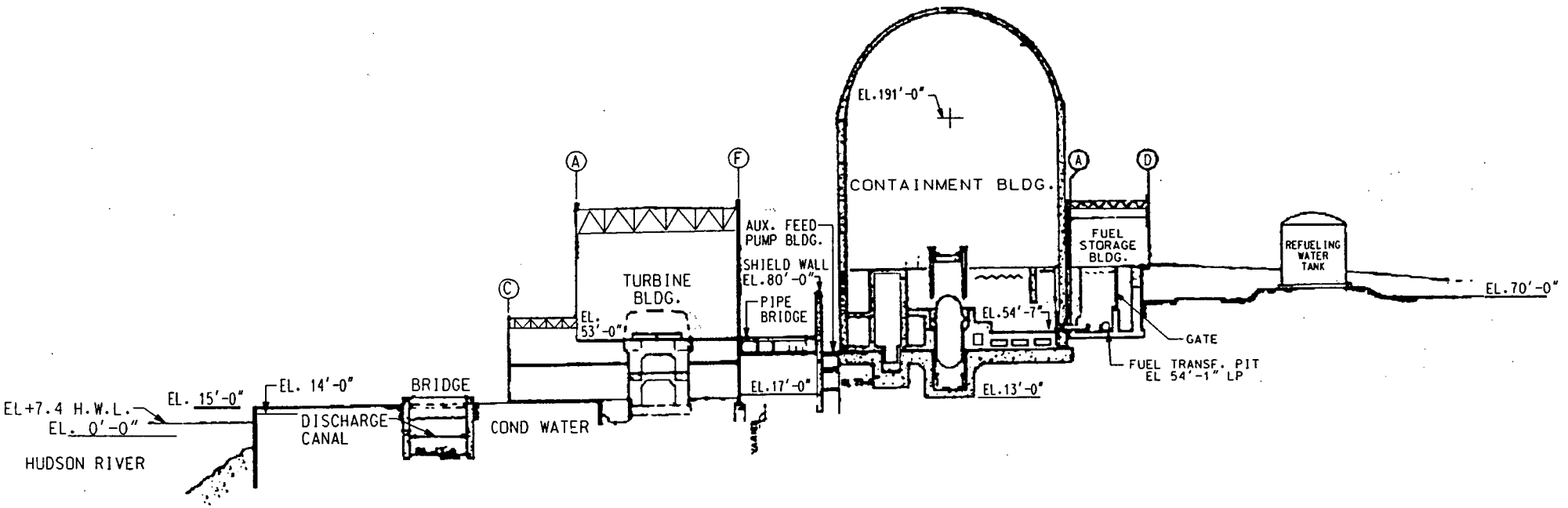

FIGURE 2

SITE PROFILE

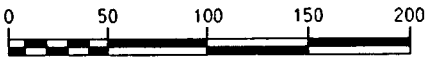

TABLE 1
INDIAN POINT NUCLEAR GENERATING STATION UNIT 3
RESOLUTION OF USI A-46 PROGRAM
OUTLIER SUMMARY

ITEM	EQUIPMENT ID NO.	EQUIPMENT DESCRIPTION	OUTLIER ISSUE	PROPOSED RESOLUTION	RESOLUTION STATUS
1	0031ART 0032ART 0033ART	Diesel Generator 30 Gal Air Receiver Tanks	Tanks are attached to grating. Grating is not anchored.	Secure grating.	
2	0031CHPS 0032CHPS 0033CHPS	Chrgng Pmp 31, 32, and 33 Suction Stabilizer Separators	Bolt tighness checks revealed loose anchors.	Tighten anchors.	**COMPLETE** Anchors replaced per Type 1 Change No. 94-3-225 CVCS, completed on 2-23-95.
3	0031 OALA 0031 OALB 0031 OALC 0032 OALA 0032 OALB 0032 OALC 0033 OALA 0033 OALB 0033 OALC	Diesel Generator 31, 32, and 33 Outside Air Louvers	These are equipment Class 0 as they are pneumatically operated louvers which do not fit in any other equipment class, therefore, by definition are outliers.	Evaluate using the GIP criteria.	**COMPLETE** The SRT evaluated this equipment during the walkdown and judged it seismically adequate.
4	31 PLSSHTX 32 PLSSHTX	Prz Liq Space Smpl Htx 31 & 32	Compressed air bottles in area inadequately restrained. Potential interaction hazard.	Adequately restrain air bottles.	
5	31 RCSSHTX 32 RCSSHTX	RCS Sample Htx 31 & 32	Compressed air bottles in area inadequately restrained. Potential interaction hazard.	Adequately restrain air bottles.	

TABLE 1
INDIAN POINT NUCLEAR GENERATING STATION UNIT 3
RESOLUTION OF USI A-46 PROGRAM
OUTLIER SUMMARY

ITEM	EQUIPMENT ID NO.	EQUIPMENT DESCRIPTION	OUTLIER ISSUE	PROPOSED RESOLUTION	RESOLUTION STATUS
6	34CHGR (GF3)	Battery Charger 34	Grating inside charger which supports the transformers, about 2 feet off floor, not secure.	Secure grating.	
7	BATTERY 33	Battery Bank 33	Side rail not tight against new batteries.	Add tight fitting spacers between new batteries and rails.	
8	BATTERY 34	Battery Bank 34	Battery spacers and one (1) end rail missing.	Install spacers and end rail.	**COMPLETE** DER 94-367,Spacers and end rail installed, WR 88-14077-00; Work completed.
9	BF-4 BF-5 BF-6	DG 31, 32, and 33 Current Xfmr Enclosures	Cast in place anchors not grouted, therefore, are unacceptable due to bending.	Grout anchors.	
10	BF8	120/120 VAC Solatron XFMR	Component missing two (2) screws attaching unit to wall bracket.	Replace screws.	
11	BI4	480V/120V SOLA Xfmr for 1B-33 and 33A	Unistrut nuts in lower unit improperly installed	Reinstall nuts.	**COMPLETE** PID 12604, Nuts reinstalled.
12	CH-FCV-111B	Bldr Flw To VCT Cntrl Vlv	Attached air line has inadequate flexibility.	Provide adequate flexibility in attached piping.	

TABLE 1
INDIAN POINT NUCLEAR GENERATING STATION UNIT 3
RESOLUTION OF USI A-46 PROGRAM
OUTLIER SUMMARY

ITEM	EQUIPMENT ID NO.	EQUIPMENT DESCRIPTION	OUTLIER ISSUE	PROPOSED RESOLUTION	RESOLUTION STATUS
13	CSAHRG1	Regen Htx 31	Inaccessible during walkdown. Enclosed in shielding.	Review vendor drawings and compare to similar heat exchangers that were walked down to determine seismic adequacy, then verify review input when component access is avail.	
14	CST	Condensate Storage Tank	Anchorage stiffener plate does not meet GIP criteria.	Futher engineering evaluation is required.	**COMPLETE** Issue resolved by futher evaluation using GIP guidance and EPRI NP-5228, Vol IV. Documented in calc 18904-IP3-015.
15	FLIGHT PANEL	Flight Panel	Loose relays in Panel Section FBF. Adjacent panels JO1 and JO2 not connected to flight panels, nor to each other.	Tighten relays. Provide adequate connection between cabinets.	**COMPLETE** Relays have been tightened, PID 11589 & 11590.
16	MCC-36A EXT	480V Motor Control Center	Not adequately connected to adjacent bays.	Connect adjacent bays at top and bottom.	
17	MCC-37	480V Motor Control Center	Adjacent chemistry cabinet not anchored.	Move Chemistry cabinet.	**COMPLETE** Chemistry cabinet has been moved away.

TABLE 1
INDIAN POINT NUCLEAR GENERATING STATION UNIT 3
RESOLUTION OF USI A-46 PROGRAM
OUTLIER SUMMARY

ITEM	EQUIPMENT ID NO.	EQUIPMENT DESCRIPTION	OUTLIER ISSUE	PROPOSED RESOLUTION	RESOLUTION STATUS
18	MCC-38	480V Motor Control Center	No anchorage.	Install anchorage - outage MOD required.	DER 94-690
19	MCC-39	480V Motor Control Center	Bays not adequately connected.	Connect bays.	**COMPLETE** Bays adequately connected per Type 1 Change No. DC-94-3-273 CB completed on 2-1-95.
20	PCV-1042	H2 Supply Press Cntrl Valve	Nearby air bottles (2 racks of 6), chained only at the top, are inadequately restrained.	Adequately restrain air bottles.	**COMPLETE** Air bottles have been adequately restrained.
21	PNL #2	Aux Steam Dump Panel	Adjacent gas bottles inadequately mounted (single chain to fence).	Properly restrain gas bottles.	Gas bottles have been temporarily restrained. Type 1 design will follow.
22	PNL 31EDGA PNL 33EDGA	31 & 33 EDG Aux Control Panels	Nearby emergency light is a potential interaction hazard.	Secure emergency light.	
23	PNL JC1	Fan Room Control Panel	Nearby emergency light EB-14-FH is a potential interaction hazard.	Relocate light.	
24	PNL PF6	Gas Analyzing Panel	Adjacent gas bottles inadequately restrained.	Adequately restrain gas bottles.	

TABLE 1
INDIAN POINT NUCLEAR GENERATING STATION UNIT 3
RESOLUTION OF USI A-46 PROGRAM
OUTLIER SUMMARY

ITEM	EQUIPMENT ID NO.	EQUIPMENT DESCRIPTION	OUTLIER ISSUE	PROPOSED RESOLUTION	RESOLUTION STATUS
25	PNL PQ1 PNL PQ2	DG 32 & 33 Control Panels	Ventilation duct too close to panel, also additional panel behind this panel with no gap between.	Add separators and/or connectors between DG panels and ventilation duct and adjacent electrical panel as required.	
26	PNL PY5	Deluge Control Panel	Panel latch inoperative.	Fix or replace latch.	**COMPLETE** Latch repaired.
27	PT-1191	Service Water Nuclear Header Press Xmtr	Transmitter U-bolt was loose.	Tighten U-bolt.	**COMPLETE** U-bolt tightened. PID 12603, WR 94-04148, 2/25/95.
28	PWST 21	Primary Water Storage Tank	Anchorage evaluation indicates tank does not meet GIP criteria.	Further engineering evaluation is required.	
29	RACK 6A	Instrument Rack	Gas bottles nearby that are inadequately restrained.	Adequately restrain bottles.	
30	RACK 24A	Ctmnt Press Xmtrs Inst Rack	Air bottles should not be chained to rack.	Restrain air bottles.	**COMPLETE** Air bottles have been properly restrained, by Maintenance, 4/95.
31	Rack C-11	CCR Rack	Rack not anchored. Base channel not bolted.	Provide adequate anchorage - refueling outage MOD required.	

TABLE 1
INDIAN POINT NUCLEAR GENERATING STATION UNIT 3
RESOLUTION OF USI A-46 PROGRAM
OUTLIER SUMMARY

ITEM	EQUIPMENT ID NO.	EQUIPMENT DESCRIPTION	OUTLIER ISSUE	PROPOSED RESOLUTION	RESOLUTION STATUS
32	Rack F-7	CCR Rack	Adjacent cabinet Rack F-6 not attached to Rack F-7 and F-7 has essential relays mounted in it.	Connect cabinets together.	
33	Rack G-2	CCR Rack	Relay LC-112C/X loose.	Tighten relays.	**COMPLETE** Relays tightened.
34	Rack G-3	CCR Rack	ST1, ST11, and 2-SI-DI common mounting plate loose.	Tighten plate.	**COMPLETE** Plate tightened.
35	RACK H-2 RACK H-3	CCR Racks	Bolt tighness checks revealed loose nuts.	Tighten nuts.	
36	RWST-31	Refueling Water Storage Tank	Anchorage evaluation indicates tank does not meet GIP criteria.	Further engineering evaluation is required.	
37	SUPERVISORY PANEL/PNL SAF	Supervisory Panel	Panel not anchored on the back side.	Install anchorage.	**COMPLETE** Anchorage installed per Type 1 Change No. 94-3-163 CPR, completed on 11-15-94.

TABLE 1
INDIAN POINT NUCLEAR GENERATING STATION UNIT 3
RESOLUTION OF USI A-46 PROGRAM
OUTLIER SUMMARY

ITEM	EQUIPMENT ID NO.	EQUIPMENT DESCRIPTION	OUTLIER ISSUE	PROPOSED RESOLUTION	RESOLUTION STATUS
38	SWGR 31 SWGR 32	480V Switchgear 31 and 32	Overhead trolley not secure. Seismic capacity of adjacent service transfomers anchorage unknown and may be an interaction hazard.	Secure trolley. Obtain as-builds of transformer anchorage when accessible and perform GIP calc to verify seismic adequacy of the anchorage.	
39	TE-126	Regen Htx Chg Flw Temp	Inaccessible during walkdown. High rad area.	Schedule for walkdown when equipment is to be maintained.	
40	TE-411B	Loop 31 Cold Leg Temp	Unistrut from nearby support less than 1" away. Potential interaction hazard.	Evaluate pipe movement.	
41	TE-641	RHR Htx 32 Outlet Temp	3" diameter pipe only 1" away. Potential interaction hazard.	Evaluate pipe movement.	
42	TE-1319	Compensating TE	Inaccessible during walkdown. High rad area.	Schedule for walkdown when equipment is to be maintained.	
43	TE-1329	Upper Tap Compensating TE	Inaccessible during scheduled walkdown. High rad area.	Walkdown during next scheduled maintenance.	

TABLE 1
INDIAN POINT NUCLEAR GENERATING STATION UNIT 3
RESOLUTION OF USI A-46 PROGRAM
OUTLIER SUMMARY

ITEM	EQUIPMENT ID NO.	EQUIPMENT DESCRIPTION	OUTLIER ISSUE	PROPOSED RESOLUTION	RESOLUTION STATUS
44	T1	Cntrl Rm HVAC Thermostat	Thermostat mounted on near a potential interaction hazard.	Adequately secure adjacent map, relocate map, or relocate thermostat.	
45	N/A	N/A	The following areas require completion of the PASS forms to complete the documention of the cable tray and conduit raceway evaluations: 1. VC Elev. 46'-0" 2. VC Elev. 68'-0" 3. VC Elev. 95'-0" 4. PP Elev. 35'-0" 5. CB Elev. 53"-0"	Walkdown areas and complete the PASS forms when areas are accessible.	

APPENDIX A

RESUMES OF THE SEISMIC REVIEW TEAM MEMBERS

Harry Johnson, P.E., Programmatic Solutions, Inc.

Paul Smith, P.E., The Readiness Operation, Inc.

Mara Lakis, The New York Power Authority

Arun C. Pal, P.E., The New York Power Authority

Harry W. Johnson

Education

Columbia University - Mechanics Engineer, 1968
University of Miami - Master of Science in Civil Engineering, 1967
University of Miami - Bachelor of Science in Civil Engineering, 1965
Bettis Atomic Power Laboratory - Reactor Engineering School, 1972
SQUG Walkdown Screening and Seismic Evaluation Training Course, 1992

Licenses and Registrations

California: Civil Engineer

Professional History

Programmatic Solutions, Inc. 1992
Robert L. Cloud & Associates, Inc, Senior Associate, 1990-1992
EQE Engineering, Senior Associate, 1986-1990
Impell Corporation, Section Manager, 1974-1986
Westinghouse Bettis Atomic Power Laboratory, Senior Engineer, 1969-1974
Cornell Aeronautical Laboratory, Project Engineer, 1968-1969

Experience

Mr. Johnson has over 20 years experience in engineering consulting in the power industry. In particular, Mr. Johnson has extensive experience in project management and design engineering.

Mr. Johnson is currently performing Peer Reviews for USI A-46 and/or IPEEE for Peach Bottom 2 & 3 and Limerick 1 & 2, Salem Units 1 & 2, Arkansas Nuclear One Units 1 & 2, Grand Gulf, Waterford, Nine Mile Point 2, Byron, Braidwood, LaSalle, and Dresden. Mr. Johnson is also performing Peer Review of experience based piping re-evaluation for the Brookhaven National Laboratory HFTR, performing a QA Audit of Seismic Programs for Indian Point Unit 2, performing USI A-46 walkdown for Indian Point Unit 3, helping to develop a plant specific seismic program and performing walkdowns to address USI A-46 for Crystal River, participating in the implementation of the Seismic IPEEE for Perry, and providing EPRI/PSE sponsored training for Seismic Technical Evaluation of Replacement Items and for Use of SQUG Methods for New and Replacement Equipment.

Mr. Johnson has performed SQUG type seismic verifications for Peach Bottom, Vermont Yankee, Pilgrim, Three Mile Island, Oyster Creek, Maine Yankee, Princeton Tokamak (TFTR), Savannah River Project, Cruas (France), Sequoyah, and Indian Point Unit 2.

For TVA Bellefonte, Mr. Johnson developed an implementation strategy for the overall IPEEE program (all external events).

Mr. Johnson has performed Independent Peer Reviews of comprehensive seismic interaction programs at Watts Bar and Comanche Peak and of the equipment seismic qualification program at Watts Bar.

Mr. Johnson has participated in the development of SQUG training programs, and developed the original draft of training for the SQUG seismic interaction module. Mr. Johnson (along with Paul Smith of TRO) developed a 2 day training course in SQUG walkdown methods which has been presented to GPU Nuclear, PSE&G of New Jersey, Rochester Gas & Electric, New York Power Authority, Carolina Power & Light, Martin Marietta, Stone & Webster, and Gilbert/Commonwealth.

Mr. Johnson is heavily involved in applying SQUG methods to nuclear procurement programs, and is active in industry initiatives in this area. To date Mr. Johnson has managed the development of these methods for seven plants. Mr. Johnson is a contractor for EPRI/PSE in the development of Seismic Technical Evaluation of Replacement Items (STERI) and Generic STERI (GSTERI).

At EQE Mr. Johnson started up and managed the Eastern Regional Office. Project work included development of new methods for seismic evaluations of mechanical and electrical equipment using SQUG methods. For GPU Nuclear, Mr. Johnson developed and managed all work associated with the seismic verification of TMI and OCNGS control room cabinets, including verification of many modifications.

At Impell Mr. Johnson was Manager of Engineering Mechanics. This included design, project management and engineering evaluations.

At Bettis Mr. Johnson headed a reactor engineering stress/test group for an advanced submarine project.

At Cornell Aeronautical Laboratory Mr. Johnson performed projects related to automobile crash injury research.

Selected Publications

"Guideline for the Seismic Technical Evaluation of Replacement Items for Nuclear Power Plants (PSE-01)", EPRI NP-7484.

"Use of Seismic Experience Data for Replacement and New Equipment", Nuclear Engineering and Design, 1990.

"Application of Industry Experience Data to Equipment Qualification", Third Symposium - Current Issues Related to Nuclear Power Plant Structures, Equipment and Piping, December 1990.

"Impact of General Procurement and Commercial-Grade Item Initiatives", Third Symposium - Current Issues Related to Nuclear Power Plant Structures, Equipment and Piping, December 1990.

"Integration of Seismic Technical Requirements for Replacement items into Nuclear Plant Design Basis", to be presented at ASME PVP Conference, June 1992.

"Role of Seismic Engineers in CGI Technical Evaluations", Earthquake Safety & Licensing Report, June 15, 1992.

"Site Specific Procedures for Seismic Verification Walkdown for a Nuclear Plant". Fourth Symposium - Current Issues Related to Nuclear Power Plant Structures, Equipment and Piping, December 1992.

"Peer Review for USI A46 and Seismic IPE", presented at ASME PVP Conference, July 1993.

"Integration of Seismic Qualification in the Engineering Change Process", presented at Fifth Symposium - Current Issues Related to Nuclear Power Plant Structures, Equipment and Piping, December 1994.

Certificate of Achievement

University of Miami

Upon the recommendation of the Faculty
has conferred on

Harry Walter Johnson

the degree of

Bachelor of Science in Civil Engineering

with all the rights, honors and privileges thereunto appertaining.
In witness whereof, the seal of the University and the signatures
of the President and the Dean are hereunto affixed.
Given at Coral Gables, Florida, on
June 8, 1965

President

Dean

University of Miami

Upon the recommendation of the Faculty
has conferred on

Harry W. Johnson

the degree of

Master of Science

with all the rights, honors and privileges thereunto appertaining.
In witness whereof, the seal of the University and the signatures
of the President and the Dean are hereunto affixed.
Given at Coral Gables, Florida, on
June 5, 1967

President

Dean

THE TRUSTEES OF COLUMBIA UNIVERSITY

IN THE CITY OF NEW YORK

TO ALL PERSONS TO WHOM THESE PRESENTS MAY COME GREETING
BE IT KNOWN THAT

HARRY WALTER JOHNSON, JR.

HAVING COMPLETED THE STUDIES AND SATISFIED THE REQUIREMENTS
FOR THE DEGREE OF

MECHANICS ENGINEER

HAS ACCORDINGLY BEEN ADMITTED TO THAT DEGREE WITH ALL THE
RIGHTS PRIVILEGES AND IMMUNITIES THEREUNTO APPERTAINING

IN WITNESS WHEREOF WE HAVE CAUSED THIS DIPLOMA TO BE SIGNED
BY THE PRESIDENT OF THE UNIVERSITY AND
BY THE DEAN OF THE FACULTY OF ENGINEERING AND APPLIED SCIENCE AND
OUR CORPORATE SEAL TO BE HERETO AFFIXED IN THE CITY OF NEW YORK
ON THE TWENTY-EIGHTH DAY OF FEBRUARY IN THE YEAR OF OUR LORD
ONE THOUSAND NINE HUNDRED AND SIXTY-EIGHT

John A Dunning
DEAN

Grayson Kirk
PRESIDENT

Paul Smith

President
The ***Readiness*** Operation, Inc.

Education

University of California - PhD in Civil/Structural Engineering, 1971
Lehigh University - Master of Science in Civil/Structural Engineering, 1964
University of Akron - Bachelor of Science in Civil Engineering, 1962

Licenses and Registrations

Civil Engineer - California C 24377

Professional History

The ***Readiness*** Operation, Inc, Oakland, California - President, 1989 to present
EQE, San Francisco, California - Senior VP, Board of Directors, 1984 - 1989
Lawrence Livermore National Laboratory, Livermore, California - Associate Program Leader for Seismic and Structural Safety, 1976 - 1984
EDS Nuclear (Impell), San Francisco, California - Supervising Engineer, 1974 - 1976
Auburn University, Alabama - Assistant Professor of Civil Engineering. 1971 - 1974
Marshall Spaceflight Center, Huntsville, Alabama - NASA-ASCE Fellow, 1972
University of California, Berkeley - Teaching and Research Assistant, 1967 - 1971
Bechtel, San Francisco, California - Civil/Structural Engineer, 1967
US Army, Fort Belvoir, Virginia - Engineering Officer, 1965 - 1967
Shell Oil, New Orleans, Louisiana - Civil/Structural Engineer, 1964-1965
Bethlehem Steel, Bethlehem, Pennsylvania - Civil/Structural Engineer, 1963
Burger Iron, Akron, Ohio - Structural Steel Designer/Drafter, 1952 - 1962

Experience

Dr Smith has over 40 years of varied experience in earthquake and structural engineering and in university teaching. He has managed large teams of research and design engineers on projects ranging from nuclear power plants to industrial, commercial, and public facilities. In recent years, he has developed a number of seismic training courses.

Dr Smith is currently performing Peer Reviews for USI A46 and the IPEEE for *Florida Power and Light*, *Philadelphia Electric*, and *Wisconsin Public Service*; participating in the implementation of the Seismic IPEEE for *Cleveland Electric Illuminating* and *New York Power Authority*; leading the development of a plant specific A46 and Seismic IPEEE program for *Florida Power Corp*, and consulting on A46 and the Seismic IPEEE for *Public Service Electric & Gas of NJ*, *Virginia Power*, and *Yankee Atomic*. Dr Smith was an invited participant in the 1991 *Workshop on Seismic Analysis of Gaseous Diffusion Plant Structures* in Paducah.

Dr Smith also organized a national workshop on the Seismic IPEEE, and has been the primary advocate of simplifying and reducing the costs of implementation of both A46 and the Seismic IPEEE.

In nuclear research, Dr Smith is best known as the developer and manager of NRC's *Seismic Safety Margins Research Program* (SSMRP). The SSMRP completed the seismic probabilistic risk analysis (PRA) efforts NRC began in the Reactor Safety Study, and developed Seismic PRA technology for the Seismic IPEEE. Dr Smith also initiated two well-known spin-offs from the SSMRP: (1) the Load Combination Program (which led the NRC to revise piping criteria and adopt the *leak before break* philosophy), and (2)

the Seismic Hazard Characterization of the Eastern United States Program (to develop a more *stable* estimate of the earthquake hazard to benefit both NRC and the industry) which developed seismic hazard technology for Seismic PRAs for the Seismic IPEEE.

Dr Smith also suggested that NRC consider a seismic margin approach as an alternative to seismic PRAs, and then managed NRC's Seismic Design Margin Program (which developed NRC's Seismic Margin method for the Seismic IPEEE), after which the Electric Power Research Institute developed its method for Seismic Margin Assessments.

Prior to the SSMRP, Dr Smith participated in a number of NRC sponsored studies of seismic design margins. He has been at the forefront of assessing seismic margin and developing improved criteria for seismic design for some time.

Dr Smith also supervised efforts on the seismic, tornado, and hurricane analysis of the mooring system and breakwater for the Atlantic Generating Station (the floating nuclear power plant).

Dr Smith is one of the founders of using data from past earthquakes to address NRC Unresolved Safety Issue A46: ***Seismic Qualification of Equipment in Operating Plants***. His NUREG/CR-3017 was a key step in helping NRC issue its first written recognition (12/28/82) of the feasibility of using these data for A46 and for the seismic verification of equipment. In his five years at EQE, he was a consultant to the Seismic Qualification Utility Group on A46, and initiated many other applications of this new technology; for example, cable tray, conduit and piping systems, tanks, anchorage, and cranes, and is identified as one of the key contributors to SQUG's Generic Implementation Procedure. He helped develop and present training programs on SQUG/GIP technology, and is currently helping SQUG develop its training program for Replacement Items and Design Changes. As EQE's SQUG Program Manager, he personally convinced the SQUG Steering Group to accept the conduit/cable tray approach that was ultimately licensed, finalized development of SQUG's conduit/cable tray methodology, and obtained SSRAP and NRC approval of it. Recently (April 1993), Dr Smith was appointed to the ASME QME and IEEE Standards Special Working Group on the Standardization of SQUG Methodology.

Dr Smith has attended the SQUG Seismic Capability Engineer training course.

Dr Smith is one of the key developers of EPRI NP-6628: *Procedure for Seismic Evaluation and Design of Small Bore Piping (NCIG-14)*, which used earthquake experience data to justify a *"design by rule"* approach for piping. NRC is reviewing it now.

In the non-nuclear area, Dr Smith has varied experience in the structural design of buildings, bridges, and offshore structures.

Dr Smith has represented the US Government at a number of seminars and exchanges on earthquake engineering, including NRC scientific exchanges with Japan in 1979 and 1982, Korea in 1982, Europe in 1979 and 1983, and Taiwan in 1984.

Selected Publications

1. Publisher and Editor of the ***Earthquake Safety & Licensing Report***[sm], *A monthly newsletter on (nuclear) industry earthquake safety*, ISSN 1045-7895.
2. *Seismic Qualification Using Earthquake Experience Data*, **Nuclear News**, June 1989.
3. *Correlation of Seismic Experience Data in Non-Nuclear Facilities with Seismic Equipment Qualification in Nuclear Plants (A-46)*, prepared for the U.S. Nuclear Regulatory Commission by Lawrence Livermore National Laboratory, **NUREG/CR-3017**, Nov. 1982.
4. *SQUG Cable Tray and Conduit Evaluation Procedure*, **Second Symposium on Current Issues Related to Nuclear Power Plant Structures, Equipment and Piping**, Orlando, December 1989.
5. *Procedure for Seismic Evaluation and Design of Small Bore Piping Developed by EPRI/NCIG*, **Third Symposium on Current Issues Related to Nuclear Power Plant Structures, Equipment and Piping**, Orlando, December 1990.
6. *Seismic Margins in Piping Systems*, in **Proceedings, 1990 Pressure Vessel And Piping Conference**, American Society of Mechanical Engineers, Nashville, 1990.

7. *Recommended Piping Seismic-Adequacy Criteria Based on Performance During and After Earthquakes*, **EPRI NP-5617** prepared for **Electric Power Research Institute**, 12/88.
8. *Independent Seismic Walkdown Review Team (ISWRT) Critique of SRS SQUG Type Seismic Program for Restart of K-Reactor at the Savannah River Site*, prepared by ISWRT for the **US Department of Energy**, February and April 1990.
9. Dr Smith is one of the significant contributors identified by SQUG for their *Generic Implementation Procedure (GIP) for Seismic Verification of Nuclear Plant Equipment*, **Seismic Qualification Utility Group (SQUG)**, February 14, 1992.
10. *Towards Future Antiseismic Criteria for Nuclear Plant Piping Systems*, published in ASME Special Publication: *Technology for the 90s*.
11. *Peer Review for USI A46 and the Seismic IPE*, ASME PVP 1993.

Training Courses Developed or Presented

"Overview of Seismic IPE and USI A-46." Developed and presented with Programmatic Solutions. One day course presented in open enrollment sessions.

"Training for Engineers and Designers in SQUG Methods." Developed and presented with Programmatic Solutions. Two day course presented on-site and in open enrollment.

"Using SQUG Methods for Modifications and Replacements." Developed and presented with Programmatic Solutions. Two day course presented on-site and in open enrollment.

"On-Site Overview of SQUG Methods and Their Use for Modification and Replacements." Developed and presented with Programmatic Solutions. Three hour on-site overview course for management presented on-site.

"Basic Seismic Engineering." Developed and presented with Programmatic Solutions. Two day course presented on-site and in open enrollment.

"Seismic IPE Workshop." Developed and presented with Programmatic Solutions. Two day workshop presented in open enrollment.

"Seismic Awareness Training," Developed with Programmatic Solutions. Three hour on-site course.

"Earthquake Awareness Training," Developed with Programmatic Solutions. Three-hour on-site course.

"SQUG Methods for European Reactors," Developed with Programmatic Solutions and hosted by CKTI VIBROSEISM. Two day course presented in St Petersburg, Russia in September 1993.

"Roundtable Workshops," Developed with Programmatic Solutions. Workshop #1 was held May 24, 1993 in the Newark, New Jersey area. The topic was: *Managing Your Seismic IPE and USI A46 Programs.*

SQUG

Certificate of Achievement

This is to Certify that

Paul Smith

has Completed the SQUG Walkdown Screening
and Seismic Evaluation Training Course
Held August 10, 1992

Neil P. Smith, Commonwealth Edison
SQUG Chairman

David A. Freed, MPR Associates
SQUG Training Coordinator

Robert P. Kassawara, EPRI
SQUG Program Manager

MARA LAKIS **SENIOR CIVIL/STRUCTURAL ENGINEER**

EDUCATION: **Bachelor of Science Degree** in Aeronautical Engineering
University of Minnesota, 1961
Graduate Level courses in Finite Element Analysis,
Earthquake Engineering, Reactor Physics
Columbia University, 1985 and 1986

EXPERIENCE: **New York Power Authority** **1983 - Present**
Sr. Civil/Structural Engineer
Performed extensive design and analysis of piping systems and supports in accordance with requirements of ANSI, AISC and regulatory codes. Work performed at Authority's both nuclear and fossil plants.

SQUG certified as a Seismic Capability Engineer
Responsible for walk-downs and seismic qualification of safety related equipment for the USI A-46 and IPEEE programs at IP3 and JAF Nuclear Power Plants.

Represented the Authority at technical meetings with vendors (Westinghouse, General Electric, and Brown Boveri), reviewing and checking their engineering calculations.

Computer programs used: NUPIPE, ANSYS, ADLPIPE, RELAP4/MOD5 and STARDYNE

Member: ERPI Pressure Integrity Subcommittee

Gibbs and Hill, Inc., New York, N.Y. **1979-1983**
Applied Mechanics Engineer
Performed steamhammer and waterhammer analysis on the Comanche Peak Project, and piping stress analysis due to these events, including support review in accordance with requirements of Section III of the ASME and B & PV Code.

Co-authored: "Hydrodynamic and Structural Effects Due to the Feedwater Line Blowdown with Check Valve Slam", ASME Conference, pp. 115 PVP, Volume - 84, July 1982.

Boeing Company, Seattle, Washington **1961-1966**
Research Engineer
Performed missile flight performance analysis, probability analysis, weapon system integration, flight test performance prediction for various defense systems, and wind tunnel testing of optimum configurations.

SQUG

Certificate of Achievement

This is to Certify that

Mara Lakis

has Completed the SQUG Walkdown Screening and Seismic Evaluation Training Course Held November 9–13, 1992

David A. Freed, MPR Associates
SQUG Training Coordinator

Neil P. Smith, Commonwealth Edison
SQUG Chairman

Robert P. Kassawara, EPRI
SQUG Program Manager

Arun C. Pal 33 Melanie Manor, East Brunswick, N.J. 08816

EDUCATION

B. Tech. (Hons.) in Civil Engrg. -Indian Inst. of Tech. India.

M.S. in Civil Engrg. - Brooklyn Polytechnic, N. Y.

Post-Graduate Diploma in Indl. Psychology & Indl. Relations

Engineer Degree in Energy Systems - The George Washington U.,D.C.

PROFESSIONAL AFFILIATIONS

Registered Professional Engineer (P. E.) in N.J., Md., D.C. & N. Y. (applied)

Member, Am. Society of Civil Egrs. (ASCE) - Nuclear Energy Comm.

Member (former) Safety Tech. Task Force of The Elect. Power Researh Inst.

Program Manager and Member of ESEERCO- Seismic Monitoring Network

NON DEGREE SHORT COURSES (Technical Subject Matters)

SQUG/EPRI Courses For USI A-46 & IPEEE : Equipment Selection, SQUG Walkdown & IPEEE Add-on Courses.

Theory of Plates and Shells- Bechtel

Fracture Mechanics- Union College

Grouting Fundamentals- U. of Missouri

Design of Welded Structures- Lincoln Electric Co.

Pipe Supports Design- NPS

Fossil Fueled Power Plants- Bechtel

Non- Technical/ Management Courses

Engineering Services in Developing Countries - ASCE

Process of Management & Motivation Workshop- Potomac Elet. Power Co.

Proj. Mgmt. & Root Cause Anal. for Org. and Prog. Improvement- NYPA

Effective Writing & Technical Presentation - NYPA

TECHNICAL PAPERS (in chronological order)

* Seismic Analysis & Design of Nuclear Power Pllants-10th World Conf. on Earthquake Engineering, July 1992, Madrid, Spain.

* Spent Fuel Cask Handling at an Operating Nuclear Power Plant, ANS Power Div. Topical Meeting, April 1988, Myrtel Beach,S.C., U.S.A.

* Evaluation of an Existing Spent Fuel Pool for Storage

of Consolidated Fuels, Co-auyhored with G.A. Harsted et. al., 9th SMIRT Conf., Aug. 1987, Lucrne, Switzerland. .

* Seismic/ Dynamic Fragility and Systems Intraction Study at Indian Point, Aug.,1985, Brookhaven Natl. Lab., N.Y., (NUREG/CP-0070)

* Seismic Design Criteria for Fossil Power Plants,Energy 84, sponsored by ASCE Energy Comm. , Pasadena, Calif.

* Tchnology Assessment of Distributed Photovoltaics, 3rd. Intl. Conf. on Alternative Energy, 1979, Miami,Fl

UNPUBLISHED PAPERS (for Energy Systems Program)

* Environmental Requirements for Fossil Power Plants

* Tidal Energy : Some Discrete Ideas.

* The Use of PRA In Nuclear Power Plant Regulations..

EXPERIENCES

10/81 to Present at The N.Y. Power Authority as Sr. Civil/Structural Engineer. This is an in-house staff position performing tasks otherwise to be done by outside consultants. Duties include analysis and design of steel and concrete structures and components,equipment qualification and procurement, construction supervision at the sites and resolutions of site problems, presentation to regulatory bodies for approvals of modifications, review of work performed by A/Es etc.

Responsible for communication with and management of designers, A/Es,vendors etc for inststallation of safe and most economical modifications.

6/78 to 9/81 at Potomac Electric Power Company, Washington,D.C. as Systems Engineer , Civil/Structural Engineering. Was responsible for the Civil/Stuctural Engineers and Designers involved in analysis, design and evaluations of exiting fossil fueled power plants to facilitate operation and maintenance. The total capacity was 6500MW for 6 plants.

2/74 to 5/78 at the Bechtel Power Corp., Gaithersburg, Md. as Sr. Engr. Was involved in analysis and design of concrete and steel structures and pipe and conduits and cable tray supports at Davis Basse Nuc. Power Plant , Unit No. 1.

Prior year worked at Burns and Roe as a Designer for fossil plant .

6/71 to 3/73 at W. J. Barney Corp., a N.Y. City Genl. Contractor as Enrg. aide.

5/13/1971- migrated to The U.S.A.

SQUG

Certificate of Achievement

This is to Certify that

Arun C. Pal

has Completed the SQUG Walkdown Screening and Seismic Evaluation Training Course Held November 9–13, 1992

David A. Freed, MPR Associates
SQUG Training Coordinator

Neil P. Smith, Commonwealth Edison
SQUG Chairman

Robert P. Kassawara, EPRI
SQUG Program Manager

APPENDIX B

PEER REVIEW REPORT

MEMO

NEW YORK POWER AUTHORITY
INDIAN POINT NUCLEAR GENERATING STATION UNIT 3
RESOLUTION OF USI A-46

Date: October 31, 1995

To: File

From: Jon E. Thompson, Atometrics, Inc. JET

Subject: Peer Review Report

Discussion:

The Peer Review Report identified that valves DF-LCV-1209A&B did not appear to meet any GIP equipment class definition. Similar valves DC-LCV-1207A&B, and DF-LCV-1208A&B are also listed on the Safe Shutdown Equipment List (SSEL). These valves are one inch (1") electro/hydraulic level control valves which control the flow of diesel fuel oil from the diesel generator fuel oil storage tanks to the fuel oil day tanks.

These valves were reviewed for inclusion in GIP Equipment Class 7 Fluid Operated Valves. Per the GIP Appendix B, Summary of Equipment Class descriptions and Caveats, Section B.7, Fluid Operated Valves, states "This equipment class includes a wide diversity of valve sizes, types, and applications, which are actuated by air, water, or oil". The equipment class also further defines inclusion by stating "The valve, the operator, and peripheral attachments (air lines, pneumatic relays, control solenoids, and conduit) are included in the Fluid-Operated Valve equipment class. The valve may be of any type, size, or orientation". The valves need to meet the "inclusion and exclusion rules" set forth as the caveats discussed in the GIP Appendix B, Section B.7.

As indicated on the Screening Evaluation Work Sheets (SEWS) for these valves, the walkdown concluded that the Bounding Spectra caveats as listed on the SEWS and further defined in Gip Appendix B, Section B.7 were met. Therefore, these valves are correctly identified as GIP Equipment Class 7.

CC: P. Okas, NYPA
A. Pal, NYPA
M. Lakis, NYPA
W. Henries, Yankee Atomic
Job Book 18904-00

YANKEE ATOMIC ELECTRIC COMPANY

Telephone (508) 779-6711
TWX 710-380-7619

YANKEE

580 Main Street, Bolton, Massachusetts 01740-1398

November 1, 1994
NS 94-633
W.O. 9266

Mr. Jon E. Thompson, P.E.
Atometrics, Inc.
2 Crosfield Avenue
West Nyack, NY 10994

Subject: Transmittal of IP3 GIP Implemetation Peer Review Evaluation Report

Dear Mr. Thompson:

Attached please find the peer review evaluation report for GIP implementation at the Indian Point 3 Nuclear Generating Station. The peer review was conducted by the undersigned on August 15-17 at Indian Point 3 and the Atometrics office.

All activities evaluated by the Peer Review Team (PRT) were performed in accordance with the GIP. No gross errors or deficiencies were found by the PRT. The Seismic Review Teams (SRTs) are experienced and knowledgeable. The SSEL is comprehensive and has been extensively reviewed by the Plant Operations Department. The SRTs and the Operations Department review of the SSEL are considered by the PRT as strong points of this program.

The results of the PRT's evaluation are provided in the attached report. Please do not hesitate to call either of the undersigned with any questions regarding this information. Also, we would like to thank you for the opportunity to perform this work, and for your assistance during the review.

Sincerely,

D R LeFrancois

Donald R. LeFrancois
Senior Mechanical Engineer

William E Henries

William E. Henries
Principal Engineer

INDIAN POINT 3 NUCLEAR GENERATING STATION

GIP IMPLEMENTATION PEER REVIEW

EVALUATION REPORT

TABLE OF CONTENTS

PAGE

1.0 EXECUTIVE SUMMARY 3

2.0 PURPOSE AND SCOPE 3

3.0 METHOD OF EVALUATION 4

4.0 EVALUATION RESULTS 4

4.1 Program Status 4
4.2 SSEL Evaluation 5
4.3 Essential Relay List Review 5
4.4 Evaluation of Seismic Review Team Performance 6
4.5 Review of Walkdown Information 6

5.0 CONCLUSIONS 8

6.0 REFERENCES 9

ATTACHMENTS

A. PEER REVIEW TEAM WORK OUTLINE

1.0 EXECUTIVE SUMMARY

The New York Power Authority (NYPA) is in the process of resolving USI A-46 through the use of the SQUG Generic Implementation Procedure (GIP). Part I, Section 2.2.7 of the GIP requires an independent evaluation (peer review) of the GIP implementation. Yankee Atomic Electric Co. (Yankee) has been contracted to perform the peer review.

The peer review was performed at Indian Point 3 on August 15 and 16, and at the office of Atometrics, Inc. on August 17.

All activities evaluated by the Peer Review Team (PRT) were performed in accordance with the GIP. No gross errors or deficiencies were found by the PRT. The Seismic Review Teams (SRTs) are experienced and knowledgeable. The SSEL is comprehensive and has been extensively reviewed by the Plant Operations Department.

The SRTs and the Operations Department review of the SSEL are considered strong points of this program.

2.0 PURPOSE AND SCOPE

The New York Power Authority has committed to use the SQUG GIP (Reference 6.1) at the Indian Point 3 Nuclear Generating Station (IP3) for resolution of USI A-46, "Seismic Qualification of Equipment in Operating Plants" (Reference 6.2). Atometrics, Inc. has been retained by NYPA to implement the GIP at IP3. Vectra Corp. has, in turn, been subcontracted by Atometrics for Seismic Equipment Walkdown Sheet (SEWS) preparation and qualification calculations.

Part I, Section 2.2.7 of the GIP requires that an independent evaluation (peer review) of the implementation of the GIP be performed by qualified individuals who were not a part of the original walkdown team. The evaluation is to provide an assessment of the GIP walkdowns and analyses. The evaluation is intended to be an overview to determine if gross errors have been made. The evaluation is not intended to be a complete quality assurance review.

Yankee was contracted by Atometrics, Inc. to supply the peer review team (PRT) to perform the independent evaluation. The purpose of this report is to document the evaluations performed by the PRT.

The scope of the peer review performed for IP3 includes evaluation of the Safe Shutdown Equipment List (SSEL), the essential relay list, walkdown information (principally SEWS) including potential seismic interactions, the performance of the SRTs, and a review of calculations for equipment anchorage and qualification.

3.0 METHOD OF EVALUATION

Prior to start of the peer review, a work outline was prepared to provide guidance for the PRT. The actual reviews and evaluations to be performed would depend on the status of the program and site walkdowns performed by the PRT.

Implementation of the GIP involves considerable engineering judgement and is heavily dependent on the skills and experience of the people performing the work. Therefore, the peer review focused on the performance of those people. The peer review team had numerous discussions with the people involved with the IP3 GIP implementation, and also observed them performing field walkdowns.

Review of calculations, SEWS, and other documentation was done by auditing samples. The SSEL, due to its importance, was reviewed in greater depth than other documentation.

The peer review was performed at the site (IP3) on August 15 and 16, and at the Atometrics office (August 17).

4.0 EVALUATION RESULTS

4.1 Program Status

At the time of peer review, the walkdown phase was approximately half completed. The SSEL had been developed, reviewed and approved. The essential relay list was approximately 80% complete, awaiting final relay screening. The anchor bolt tightness checks were about half completed. No outlier resolutions had been performed.

Anchorage calculations had been preformed for all applicable equipment for which SEWS had been prepared, with the exception of items classified as outliers.

The following organizations are involved in the IP3 program for GIP implementation:

Organization	Responsibilities
NYPA	Overall program management including final reviews and approvals, anchor bolt tightness checks, SRT members, review and approval of SSEL and relay list
Atometrics	Program management, preparation of SSEL and relay list, relay screening
Vectra	Preparation of SEWS, anchorage and equipment qualification calculations

Organization	Responsibilities
The Readiness Operation (Paul Smith)	SRT team leader
Programmatic Solutions (Harry Johnson)	SRT team leader

4.2 SSEL Evaluation

The SSEL was reviewed in detail. Based on the PRT's experience, the list was evaluated for inclusion/exclusion of typical systems and equipment. The SSEL was also compared with working copies of the marked-up flow diagrams from which it was derived.

Comparison of the SSEL with the flow diagrams showed some minor discrepancies - transmitters LT-100 & 102 are on the SSEL, but not noted on the diagrams, valve LCV-460 is marked on the flow diagrams, but not present on the SSEL. The discrepancies were relayed to Atometrics.

The SSEL has been reviewed by the IP3 Plant Operations Department, and in fact was confirmed through use of the simulator. Four separate scenarios were run through the simulator, assuming only equipment on the SSEL was available for shutdown and appropriate single failures. The use of the simulator and the Operations Department review is a definite strength of the IP3 SSEL. The SSEL appears to be comprehensive, and seems to allow for an almost normal plant shutdown.

At the time of the review, the SSEL was considered a "living" document, i.e. it is subject to change based on walkdown results, relay screening, etc. The final SSEL must be reviewed by IP3 Operations, and a review of the final SSEL must be performed to insure that all listed equipment, including relays and anchorage, has been evaluated. The NYPA and Atometrics project managers stated that they would insure that these reviews would be done.

4.3 Essential Relay List Review

The methodology for selecting relays and performing relay screening was discussed in detail with Atometrics. The essential relay list itself was not reviewed in detail. The methods employed appear to be consistent with the GIP and the SSEL. One schematic drawing containing essential relays was chosen, and the relay list reviewed to verify that those relays had been recorded. All relays were present on the list.

During the PRT's walkdown of the IP3 Control Room, it was observed that devices similar to "Sigma meters" were used for level indication. Older vintage Sigma meters are sensitive to vibration, and could potentially cause an unwanted action during an earthquake.

Atometrics was asked to review the circuit diagrams to insure that, if devices of this type were present, their malfunction would not cause an unwanted action during or after an earthquake. Atometrics agreed that they would review the circuit diagrams, and address any devices of the type discussed above.

4.4 Evaluation of Seismic Review Team Performance

Seismic verification walkdowns are proceeding by equipment class. SRTs composed of two seismic capability engineers (SCEs) are provided SEWS for the equipment to be walked down. The SEWS are prepared by Vectra. The SRTs walk down the equipment to verify that the SEWS information is correct. Verification of equipment anchorage types and locations, and seismic interaction are included in the walkdown.

The PRT accompanied each of the SRTs as they walked down various equipment including tanks, DC power panels, transformers, level transmitters, and cable trays. In addition, the PRT reviewed heat exchangers, diesel generators, batteries, and inverters which the SRTs had previously walked down. The experience of the SRTs was evident and is a strength of the program. The observed walkdowns were being performed in accordance with the GIP. Field review of potential seismic interactions was being done properly and conservatively. Outliers were correctly identified. Two potential outliers were identified while the PRT was present: Emergency diesel day tank fill valves DF-LCV-1209A & B did not appear to fit into the SQUG data base for fluid, motor, or solenoid operated valves. 480/120 VAC transformers B1-31/31A and 32/32A are mounted on Unistrut, and the SRT noticed that several of the spring nuts attaching the transformers to the Unistruts were not properly engaged.

It was noted during the walkdowns that some equipment was not labeled, causing the SRTs difficulty. This was identified to NYPA project engineers who initiated work orders to label the equipment.

4.5 Review of Walkdown Information

The following documents were reviewed: SEWS, anchor bolt tightness check forms, the procedure for anchor bolt tightness check, and the procedure for performing the seismic verification walkdowns.

<u>Anchor Bolt Tightness Check</u>

Appendix C, Section C.2.3 of the GIP requires that a check of the tightness of expansion type anchor bolts be performed. A sampling program to check tightness is allowed by Section C.2.3. The NYPA procedure (Reference 6.3) requires that 100% of the accessible expansion type anchor bolts be checked for tightness. The NYPA procedure is also in accordance with the other GIP requirements for the check of anchor bolt tightness. The sample of completed tightness check forms reviewed by the PRT were verified as correct.

Seismic Verification Walkdown Procedure

The NYPA procedure for the seismic verification walkdown (Reference 6.4) was reviewed and is in accordance with the GIP requirements. A minor difference was noted between the walkdown and anchor bolt tightness procedures. The anchor bolt procedure requires that an SCE be present for the checks. The walkdown procedure, section 4.3.5, states that an SCE need not be present at the checks. The GIP does not require an SCE to be present at anchor bolt tightness checks. Since the anchor bolt procedure is more stringent than the GIP, it is acceptable.

SEWS

SEWS covering the following classes of equipment were reviewed:

GIP Equipment Class	Description
1	Motor Control Centers
4	Transformers
5	Horizontal Pumps
6	Vertical Pumps
7	Fluid Operated Valves
8A	Motor Operated Valves
8B	Solenoid Operated Valves
13	Motor Generators
14	Distribution Panels
18	Instruments on Racks
20	Instr. & Control Panels & Cabinets
21	Tanks and Heat Exchangers

The SEWS reviewed were similar to SEWS provided in the GIP. Plant specific information was provided on the SEWS as well as the status of the equipment. Anchorage calculations, where required, were attached to the SEWS. A sample of the anchorage calculations were reviewed, and found to be conservative. Assumptions made in the calculations were field verified by the SRTs. The computer code ANCHOR was used for anchorage evaluations. The SEWS and anchorage calculations were found to be in accordance with GIP requirements.

The PRT verified a sample of completed SEWS by comparing the information on the SEWS with the field condition of the equipment. No discrepancies between SEWS information and equipment condition were found for the sample reviewed.

Capacity for most of the equipment reviewed by the PRT is based on 1.5 x the GIP bounding spectra (BS). Demand is based on a conservative design, in-structure response spectra (IRS). The IRS, except for elevation 70' in the Control Building, is enveloped by 1.5 x the BS. If 1.5 x the BS is used for the capacity of equipment at elevation 70', the amount the IRS exceeds 1.5 x the BS must be reviewed, and meet the requirements of the GIP, Part II, Section 4.2.

Outlier Resolution

The PRT was able to observe the handling of one outlier. In this case, the identified equipment (MCC-39) potentially did not meet its design basis. The resolution of this outlier was performed using plant procedures for equipment identified as potentially not meeting its design basis (reference Deficiency Event Report MCC-39). These procedures will allow for proper resolution of the outlier, including equipment modifications as required. The existing plant procedures meet GIP requirements for resolving outliers. The plant procedures apply only to equipment which, potentially, does not meet its design basis. The PRT was not able to observe the resolution of outliers which met their design basis, but did not meet GIP requirements.

5.0 CONCLUSIONS

As stated in the purpose and scope section, the peer review is not a full "Quality Assurance" audit. Also, the peer review was performed when the program for GIP implementation at IP3 was about 75% completed. Given these two qualifiers, the following conclusions can be made regarding the IP3 GIP implementation program.

- All activities evaluated by the Peer Review Team were performed in accordance with the GIP. No gross errors or deficiencies were found by the PRT. The Seismic Review Teams are experienced and knowledgeable. The SSEL is comprehensive and has been extensively reviewed by the Plant Operations Department. The SRTs and the Operations Department review of the SSEL are considered strong points of this program.

- The PRT was not able to observe the resolution of outliers, except for the case where the equipment identified as an outlier did not meet its design basis. In this case, the actions and resolutions required by plant procedures meet GIP requirements for outlier resolution. The PRT did not review resolution of equipment identified as outliers, but which met their design basis.

- With the number of organizations involved in the IP3 program, the potential exists for items "slipping through the cracks". Of particular concern are changes (addition/deletions of equipment) to the SSEL. A final review must be made to insure that: (a) seismic verification walkdowns and qualification calculations have been performed for all equipment, as appropriate, on the final SSEL, (b) anchor bolt tightness checks have been performed for all equipment on the final SSEL with anchor bolts, (c) the essential relay list is verified against the final SSEL, (d) IP3 Operations has reviewed and approved the final SSEL. This subject was discussed with both the NYPA and Atometrics program managers. Both managers stated that a final review would be performed. These assurances are adequate to resolve this concern of the PRT.

6.0 REFERENCES

6.1 Generic Implementation Procedure (GIP) for Seismic Verification of Nuclear Plant Equipment, Revision 2, Corrected 2/14/92.

6.2 USNRC Unresolved Safety Issue (USI) A-46, *Seismic Qualification of Equipment in Operating Plants.*

6.3 NYPA Procedure No. ENG-551, *Expansion Anchor Tightness Check,* Revision 0, Approved May 10, 1994.

6.4 NYPA, Project Instructions, *Conducting Walkdown Activities Related to Verification of Seismic Adequacy of Mechanical and Electrical Equipment in Operating Reactors, Unresolved Safety Issue A-46,* Revision 0, Approved April 26, 1994.

ATTACHMENT A

PEER REVIEW TEAM WORK OUTLINE

INDIAN POINT 3 SQUG

YAEC INDEPENDENT PEER REVIEW

Work Outline

I. Review Safe Shutdown Equipment List (SSEL)

A. Select equipment from SSEL for review of Seismic Equipment Walkdown Sheets (SEWS), capacity vs. demand calculations, anchorage qualification, and for field walkdown.

1. Electrical: includes batteries, MCCs, switchgear, distribution, I&C, and control panels, generators, transformers, battery chargers, and inverters.

2. Mechanical: includes pumps, chillers, compressors, air handlers, fans.

3. Valves

B. Select equipment from SSEL, and review SEWS for inclusion.

II. Relays

A. Select relays from essential relay list for review of capacity vs. demand calculations and field walkdown.

III. Tanks and Heat Exchangers

A. Select tank/heat exchanger from SSEL for review of capacity vs. demand calculations and field walkdown.

IV. Cable Tray and Conduits

A. Review methodology for selecting worst case and sample for limited analytical review. Confirm with field walkdown.

B. Evaluate calculations for selected limited analytical reviews.

V. Outliers

A. Select outliers for field walkdown.

B. Review calculations qualifying outliers and disposition of outliers not qualified through further analysis.

VI. Field Walkdown

The field walkdown will focus on equipment selected in I - V above. SEWS for the selected equipment will be compared with field condition of the equipment. Also, general observation will be made with regard to potential seismic interactions.

APPENDIX C

RESPONSE SPECTRA

APPENDIX C

VERIFICATION OF SEISMIC ADEQUACY OF MECHANICAL AND ELECTRICAL EQUIPMENT IN OPERATING REACTORS IN RESPONSE TO USI A-46

RESPONSE SPECTRA CURVES

CURVE 1	Containment Building - Elevation 85′ 0"
CURVE 2	Containment Building - Elevation 106′ 0"
CURVE 3	Containment Building - Elevation 127′ 0"
CURVE 4	Inner Containment Pressurizer Shield Wall - Elevation 127′ 6"
CURVE 5	Primary Auxiliary Building - Elevation 55′ 0"
CURVE 6	Primary Auxiliary Building - Elevation 73′ 0"
CURVE 7	Primary Auxiliary Building - Elevation 90′ 0"
CURVE 8	Control and Diesel Generator Building - Elevation 15′ 0"
CURVE 9	Control and Diesel Generator Building - Elevation 32′ 0"
CURVE 10	Control and Diesel Generator Building - Elevation 48′ 0"
CURVE 11	Control and Diesel Generator Building - Elevation 70′ 0"
CURVE 12	Intake Structure - Elevation 15′ 0"
CURVE 13	Electrical Tunnel, Pipe Penetration/Pipe Tunnel - Elevation 35′ 0"
CURVE 14	Electrical Tunnel, Pipe Penetration/Pipe Tunnel - Elevation 51′ 0"
CURVE 15	Auxiliary Boiler Feedwater Pump Building - Elevation 42′ 0"
CURVE 16	Auxiliary Boiler Feedwater Pump Building - Elevation 54′ 0"
CURVE 17	Auxiliary Boiler Feedwater Pump Building - Elevation 66′ 0"

APPENDIX C

RESPONSE SPECTRA CURVES

CURVE 18	Auxiliary Boiler Feedwater Pump Building - Elevation 78′ 0"
CURVE 19	Diesel Generator Fuel Oil Tank - Elevation 32′ 0"
CURVE 20	IP-3 Horizontal Ground Response Spectra
CURVE 21	Fan House Building - Elevation 89′ 0"

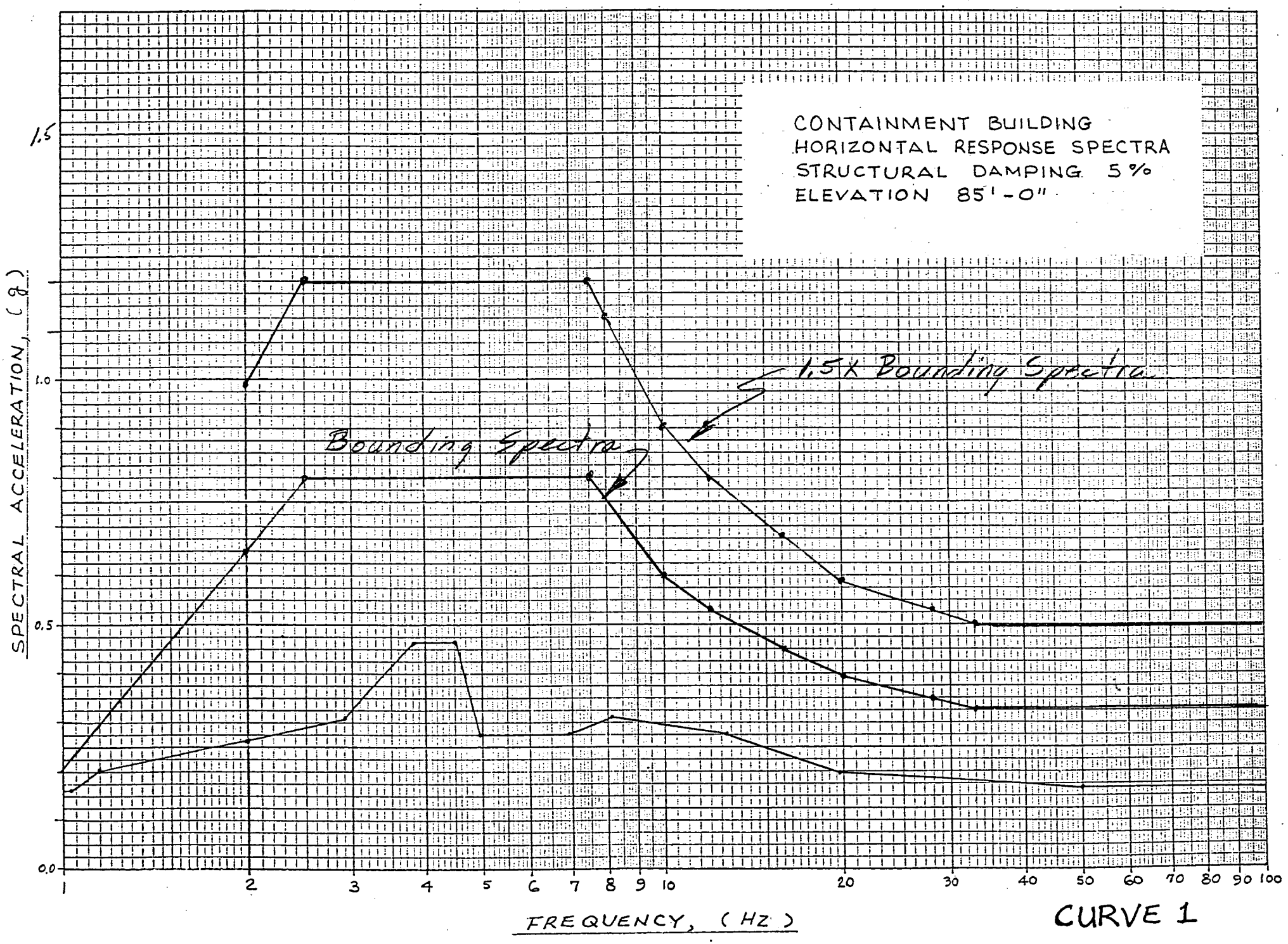
CONTAINMENT BUILDING
HORIZONTAL RESPONSE SPECTRA
STRUCTURAL DAMPING 5%
ELEVATION 85'-0"
1.5 X Bounding Spectra
Bounding Spectra
SPECTRAL ACCELERATION, (g)
1.5
1.0
0.5
0.0
1
2
3
4
5
6
7
8
9
10
20
30
40
50
60
70
80
90
100
FREQUENCY, (HZ)

CURVE 1

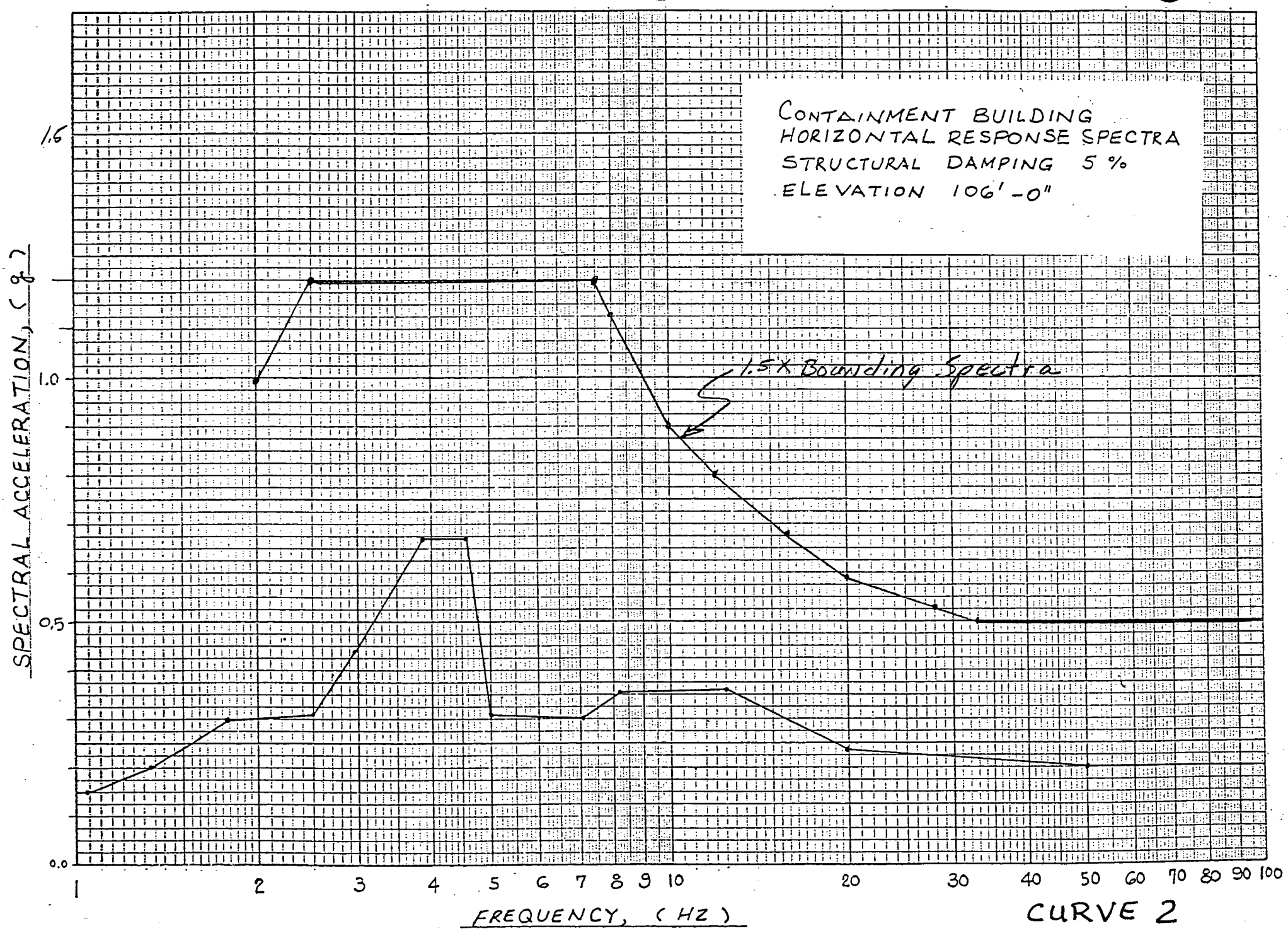
CONTAINMENT BUILDING
HORIZONTAL RESPONSE SPECTRA
STRUCTURAL DAMPING 5 %
ELEVATION 106'-0"
1.5 x Bounding Spectra
SPECTRAL ACCELERATION, (g)
1.6
1.0
0.5
0.0
1
2
3
4
5
6
7
8
9
10
20
30
40
50
60
70
80
90
100
FREQUENCY, (HZ)

CURVE 2

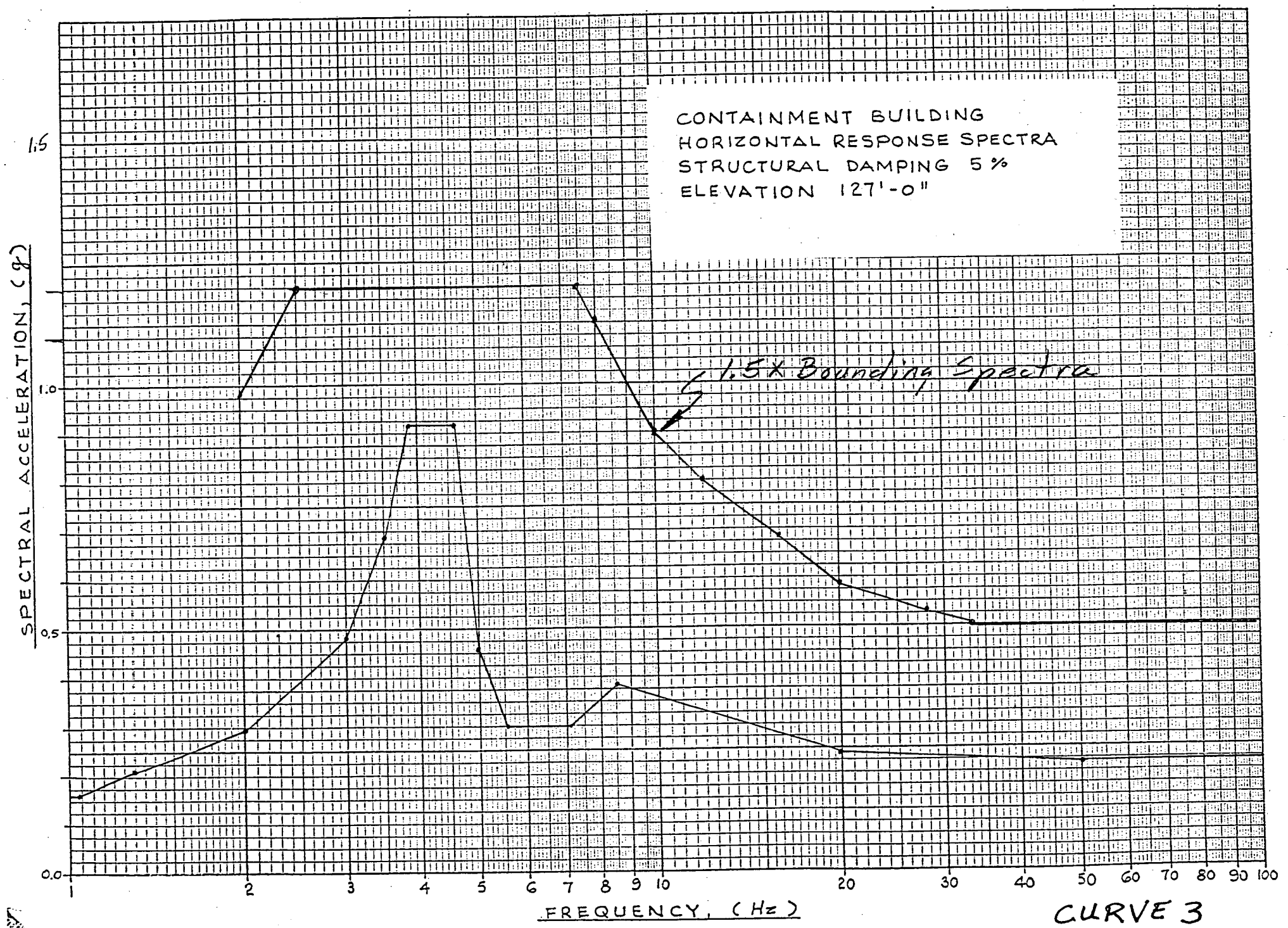
CONTAINMENT BUILDING
HORIZONTAL RESPONSE SPECTRA
STRUCTURAL DAMPING 5%
ELEVATION 127'-0"
1.5
1.0
0.5
0.0
SPECTRAL ACCELERATION, (g)
1.5 x Bounding Spectra
1
2
3
4
5
6
7
8
9
10
20
30
40
50
60
70
80
90
100
FREQUENCY, (Hz)

CURVE 3

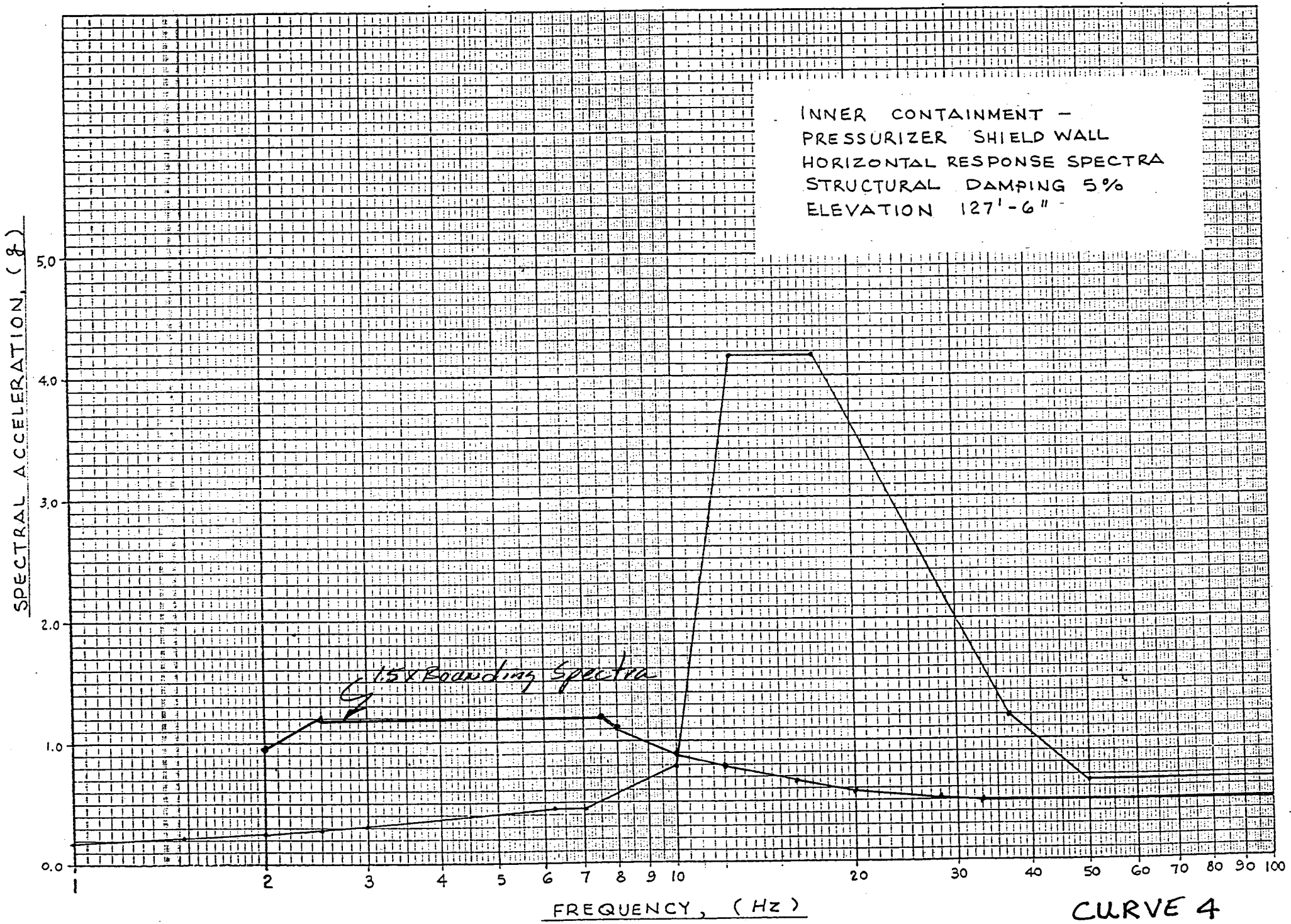
INNER CONTAINMENT –
PRESSURIZER SHIELD WALL
HORIZONTAL RESPONSE SPECTRA
STRUCTURAL DAMPING 5%
ELEVATION 127'-6"
SPECTRAL ACCELERATION, (g)
5.0
4.0
3.0
2.0
1.0
0.0
1.5 x Boarding Spectra
1
2
3
4
5
6
7
8
9
10
20
30
40
50
60
70
80
90
100
FREQUENCY, (Hz)

CURVE 4

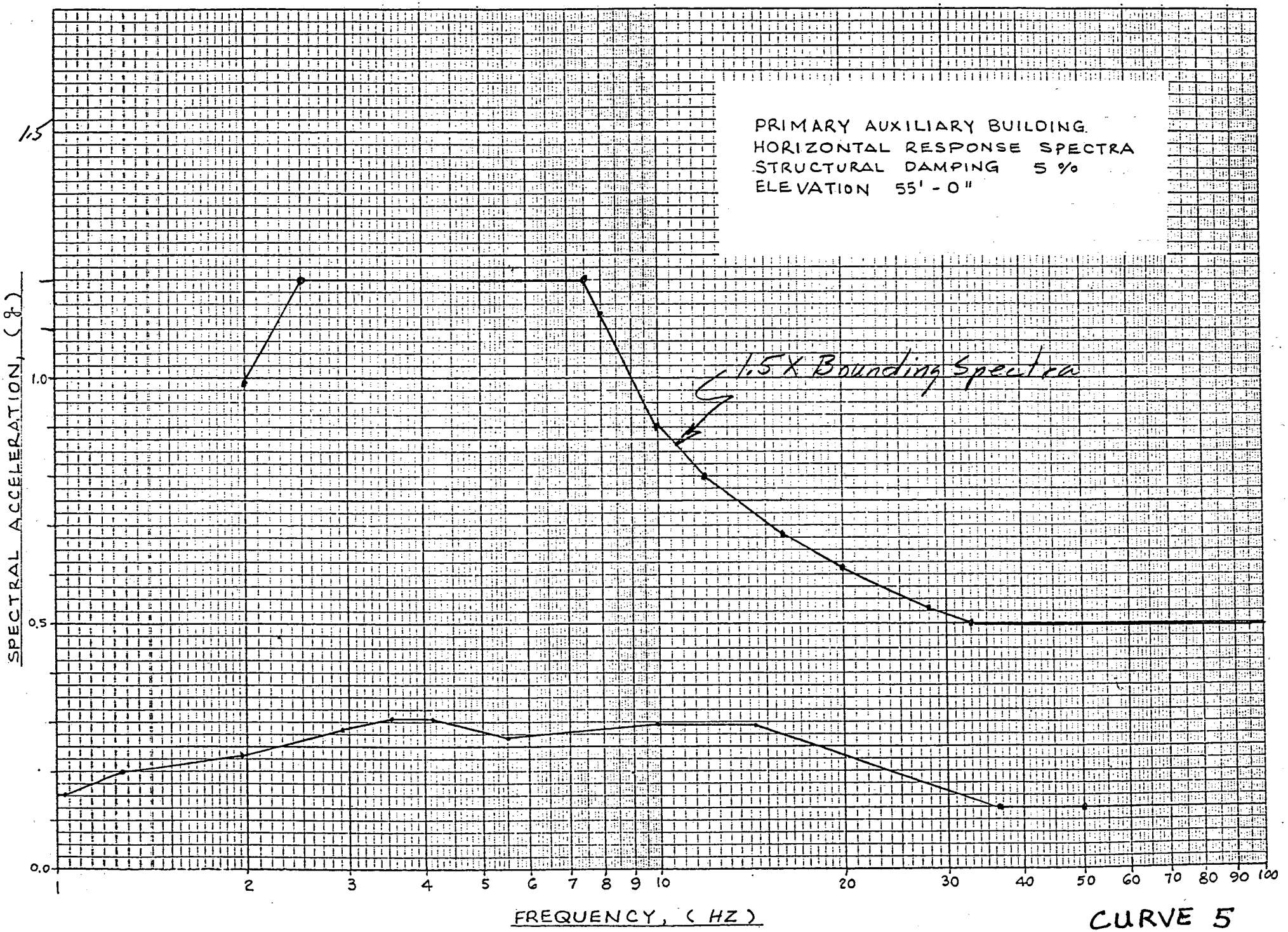
PRIMARY AUXILIARY BUILDING
HORIZONTAL RESPONSE SPECTRA
STRUCTURAL DAMPING 5 %
ELEVATION 55' - 0"
1.5 X Bounding Spectra
SPECTRAL ACCELERATION, (g)
1.5
1.0
0.5
0.0
1
2
3
4
5
6
7
8
9
10
20
30
40
50
60
70
80
90
100
FREQUENCY, (HZ)

CURVE 5

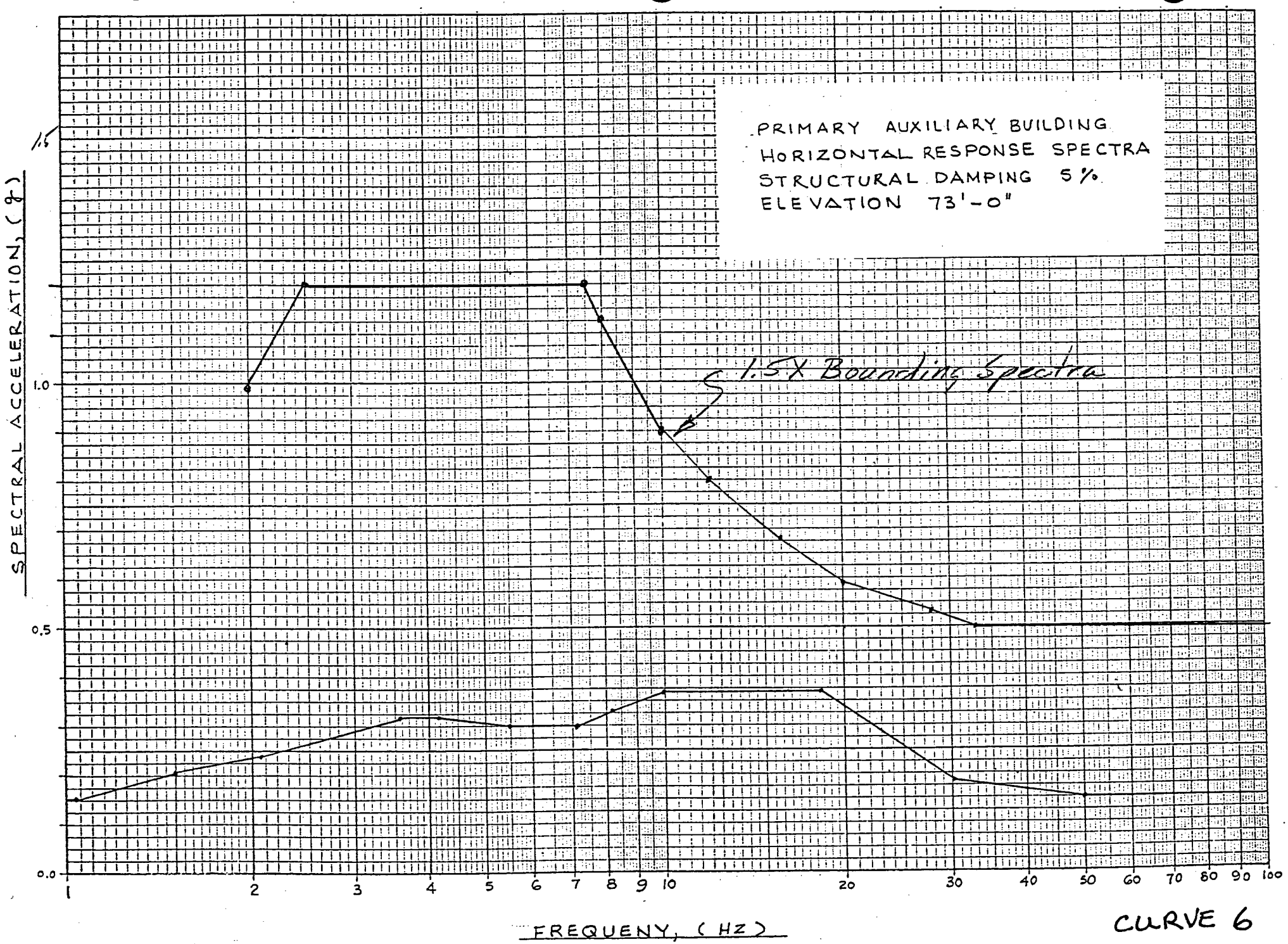
PRIMARY AUXILIARY BUILDING
HORIZONTAL RESPONSE SPECTRA
STRUCTURAL DAMPING 5%
ELEVATION 73'-0"
1.5X Bounding Spectra
SPECTRAL ACCELERATION, (g)
1.5
1.0
0.5
0.0
1
2
3
4
5
6
7
8
9
10
20
30
40
50
60
70
80
90
100
FREQUENY, (HZ)

CURVE 6

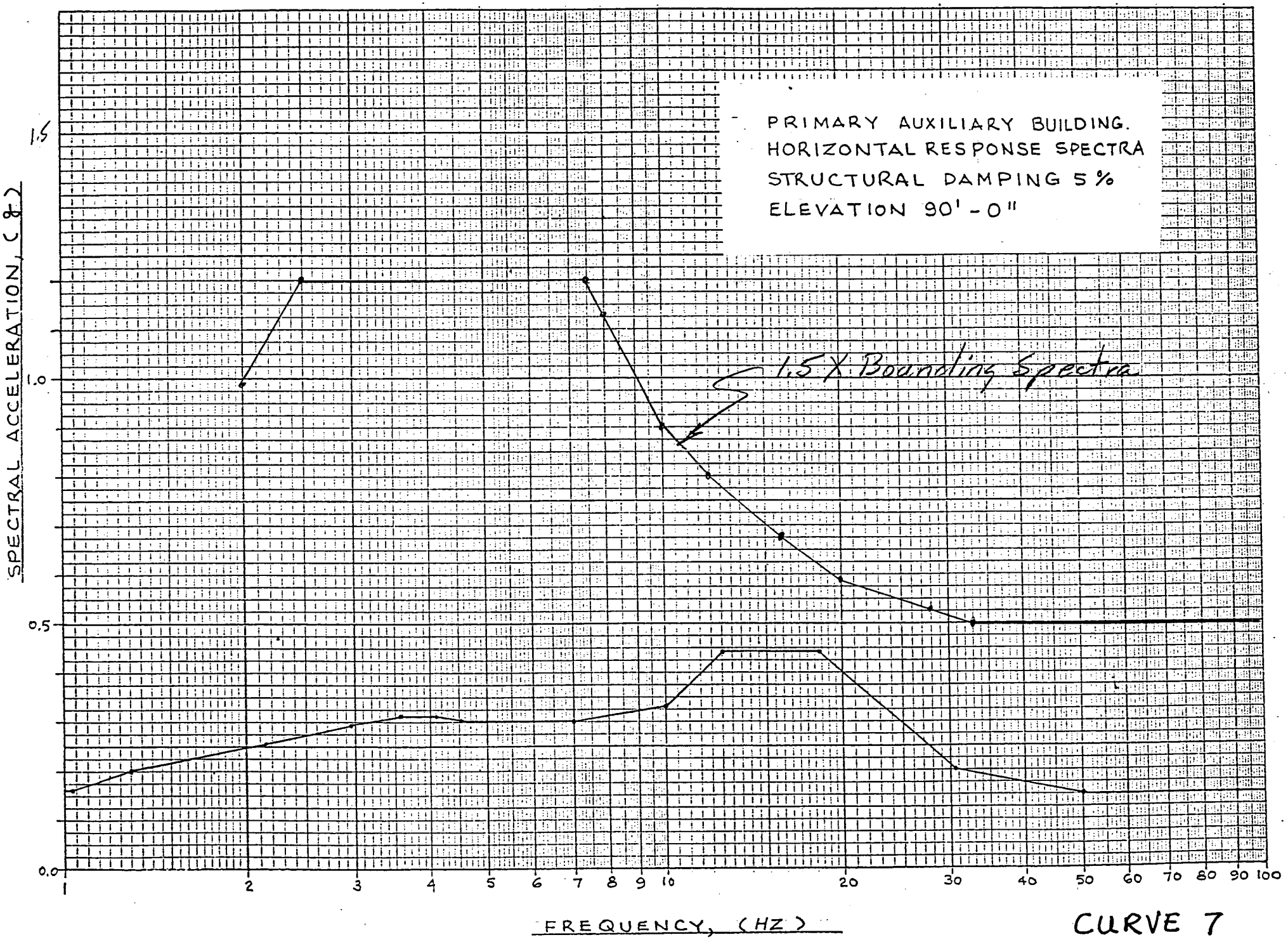
PRIMARY AUXILIARY BUILDING.
HORIZONTAL RESPONSE SPECTRA
STRUCTURAL DAMPING 5%
ELEVATION 90'-0"
1.5 X Bounding Spectra
SPECTRAL ACCELERATION, (g)
1.5
1.0
0.5
0.0
1
2
3
4
5
6
7
8
9
10
20
30
40
50
60
70
80
90
100
FREQUENCY, (HZ)

CURVE 7

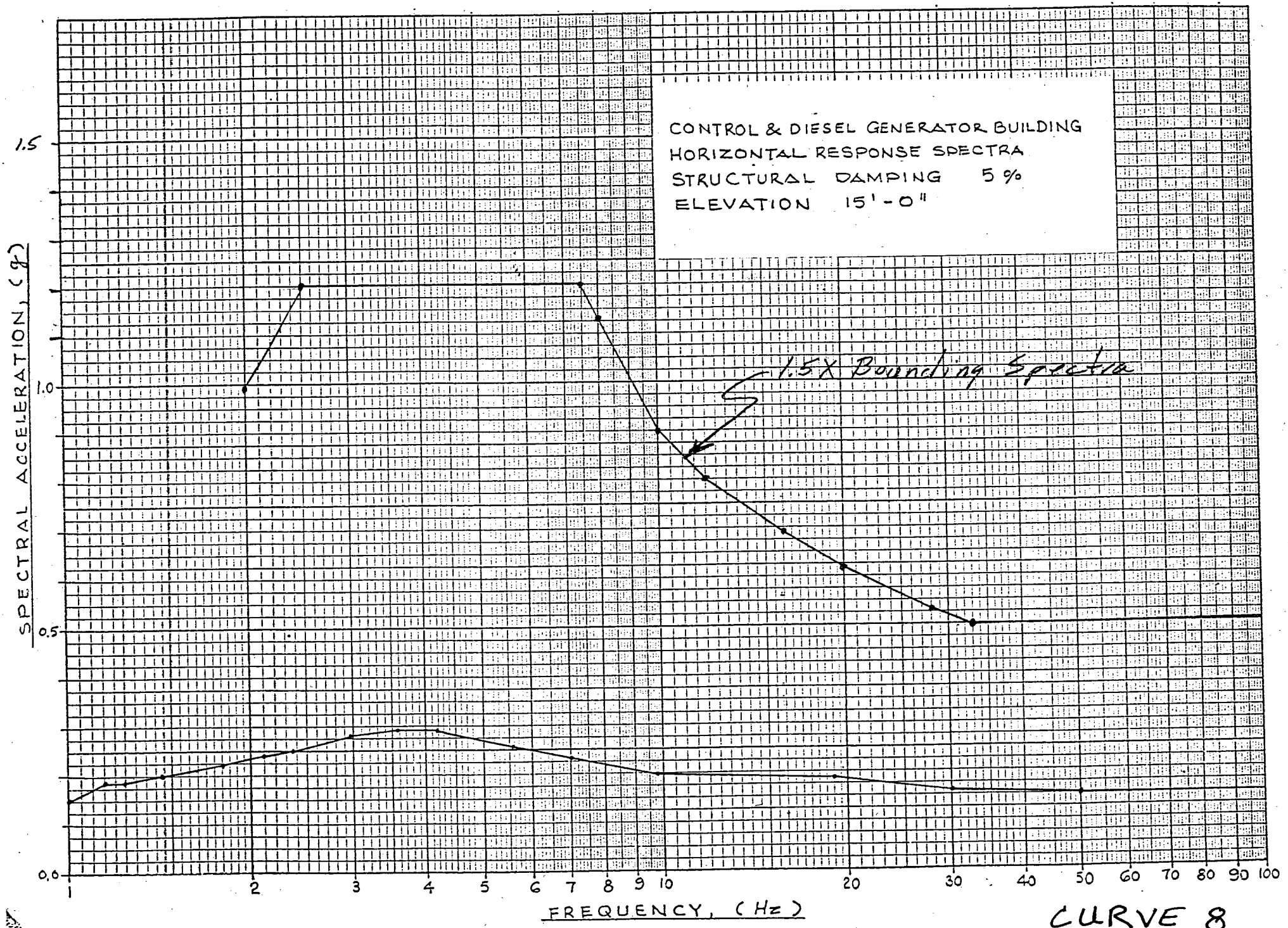
CONTROL & DIESEL GENERATOR BUILDING
HORIZONTAL RESPONSE SPECTRA
STRUCTURAL DAMPING 5 %
ELEVATION 15'-0"
1.5X Bounding Spectra
SPECTRAL ACCELERATION, (g)
1.5
1.0
0.5
0.0
1
2
3
4
5
6
7
8
9
10
20
30
40
50
60
70
80
90
100
FREQUENCY, (Hz)

CURVE 8

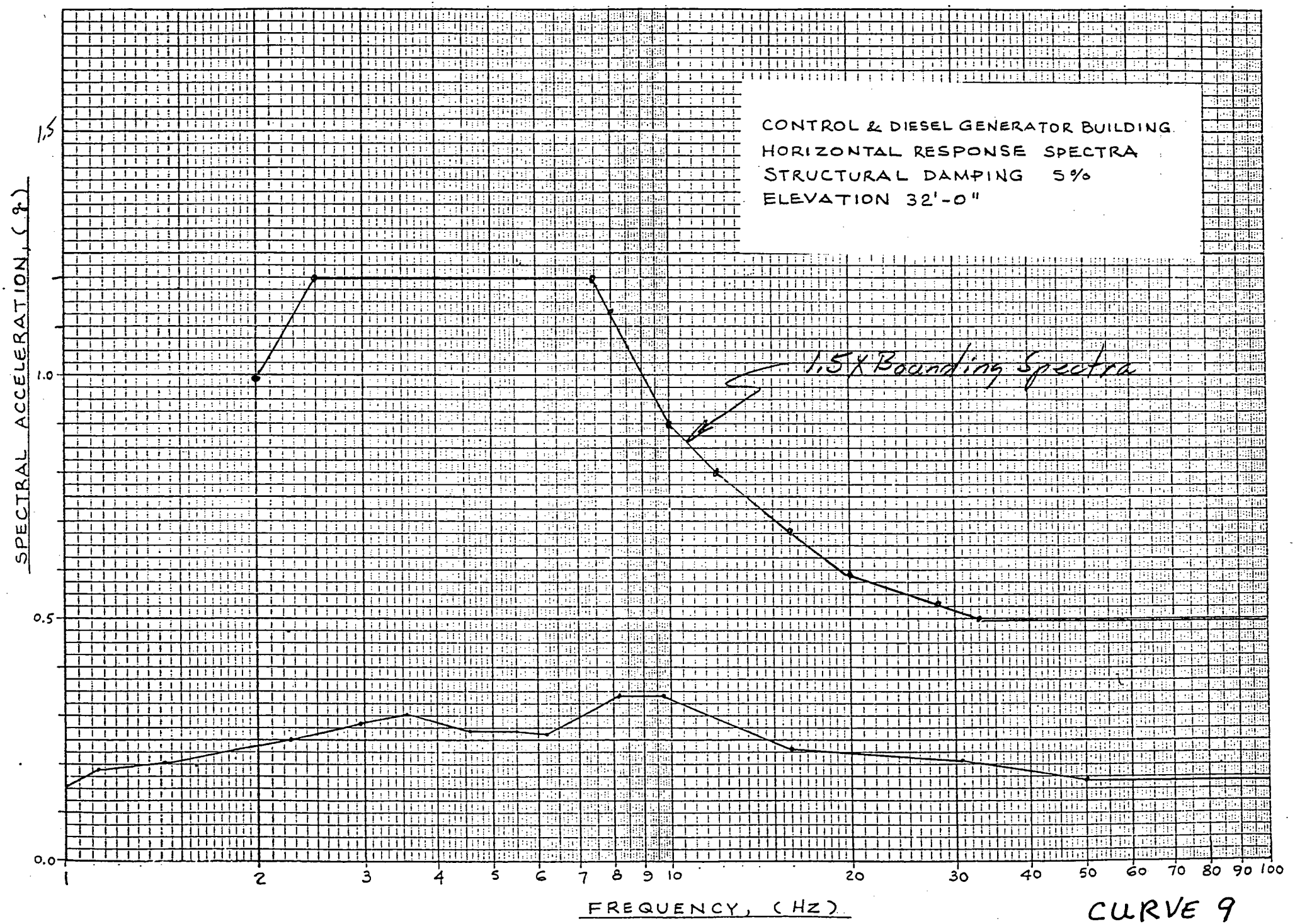
CONTROL & DIESEL GENERATOR BUILDING
HORIZONTAL RESPONSE SPECTRA
STRUCTURAL DAMPING 5%
ELEVATION 32'-0"
1.5 X Bounding Spectra
SPECTRAL ACCELERATION, (g)
1.5
1.0
0.5
0.0
1
2
3
4
5
6
7
8
9
10
20
30
40
50
60
70
80
90
100
FREQUENCY, (HZ)

CURVE 9

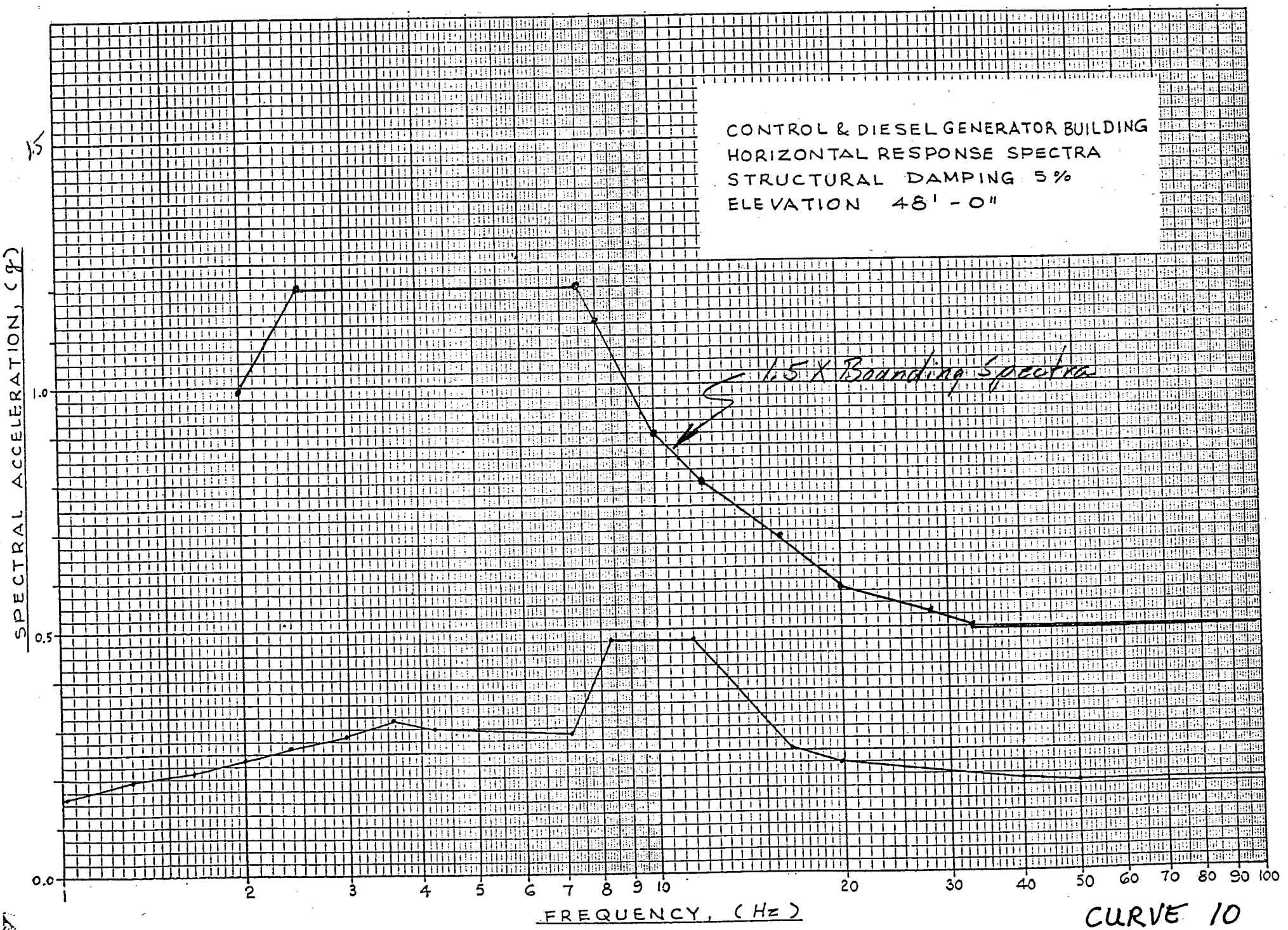
CONTROL & DIESEL GENERATOR BUILDING
HORIZONTAL RESPONSE SPECTRA
STRUCTURAL DAMPING 5%
ELEVATION 48' - 0"
1.5 X Boarding Spectra
SPECTRAL ACCELERATION, (g)
1.5
1.0
0.5
0.0
1
2
3
4
5
6
7
8
9
10
20
30
40
50
60
70
80
90
100
FREQUENCY, (Hz)

CURVE 10

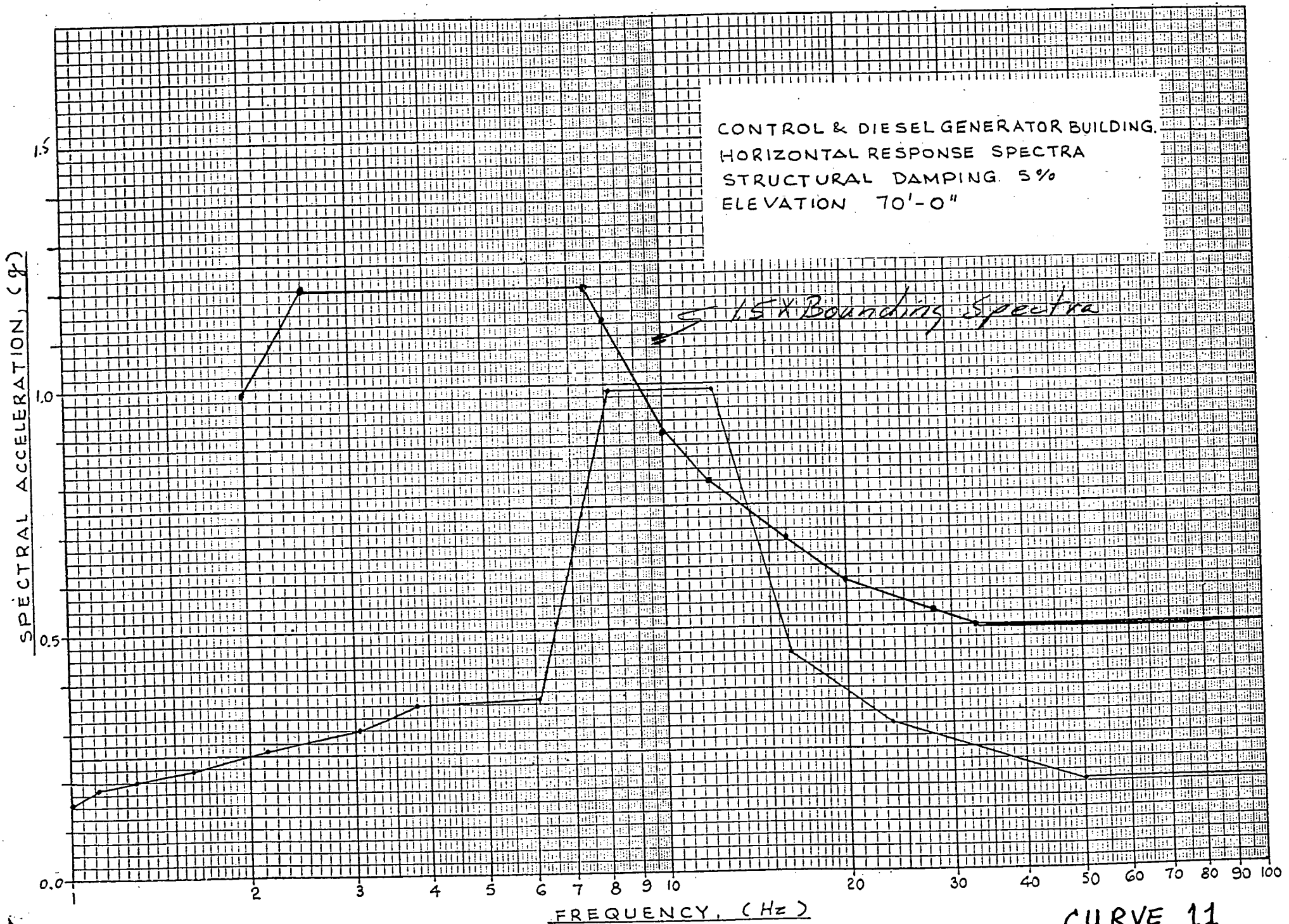
CONTROL & DIESEL GENERATOR BUILDING.
HORIZONTAL RESPONSE SPECTRA
STRUCTURAL DAMPING 5%
ELEVATION 70'-0"
1.5 X Bounding Spectra
SPECTRAL ACCELERATION, (g)
1.5
1.0
0.5
0.0
1
2
3
4
5
6
7
8
9
10
20
30
40
50
60
70
80
90
100
FREQUENCY, (Hz)

CURVE 11

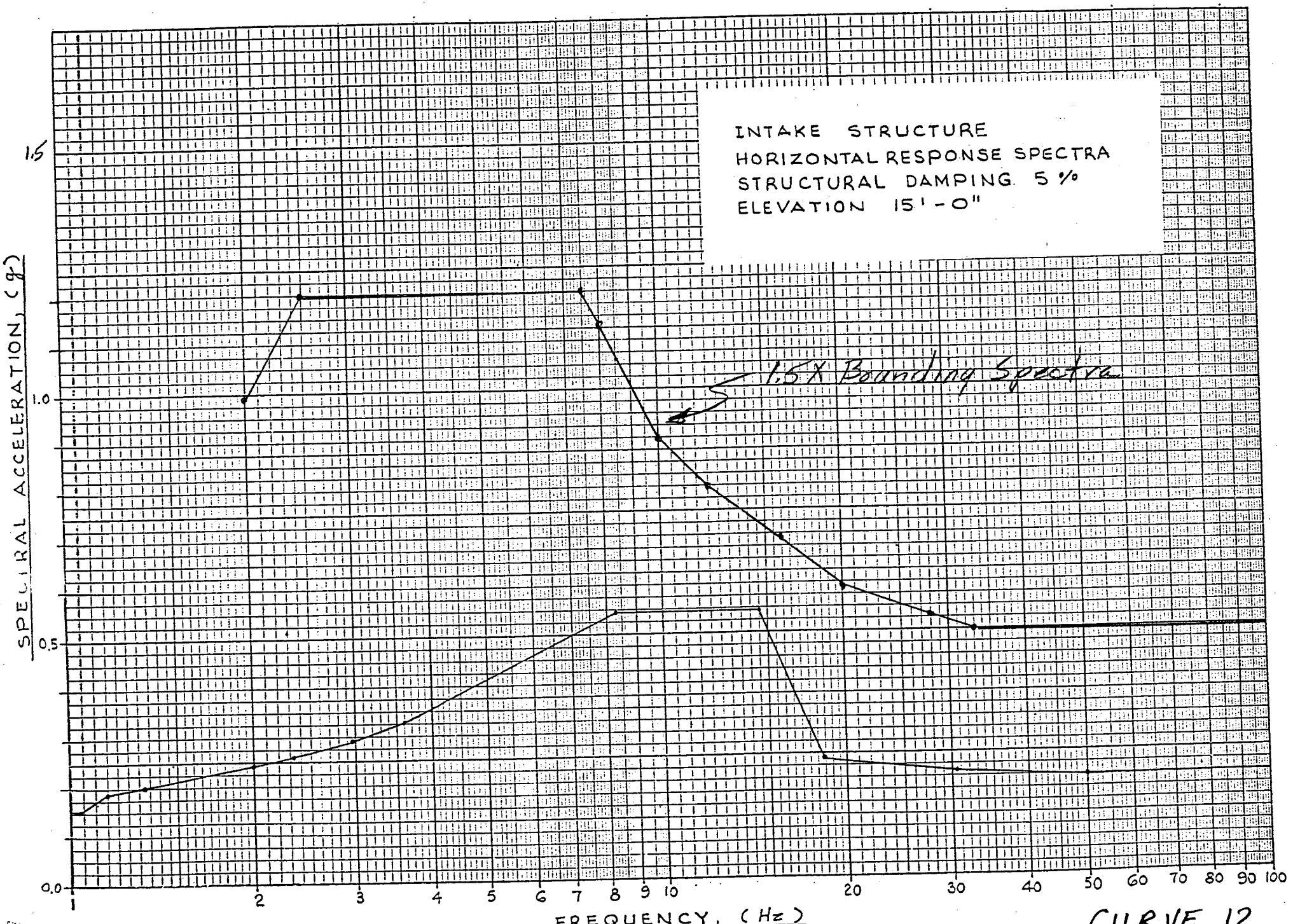
INTAKE STRUCTURE
HORIZONTAL RESPONSE SPECTRA
STRUCTURAL DAMPING 5 %
ELEVATION 15'-0"
1.5 X Bounding Spectra
SPECTRAL ACCELERATION, (g)
1.5
1.0
0.5
0.0
1
2
3
4
5
6
7
8
9
10
20
30
40
50
60
70
80
90
100
FREQUENCY, (Hz)

CURVE 12

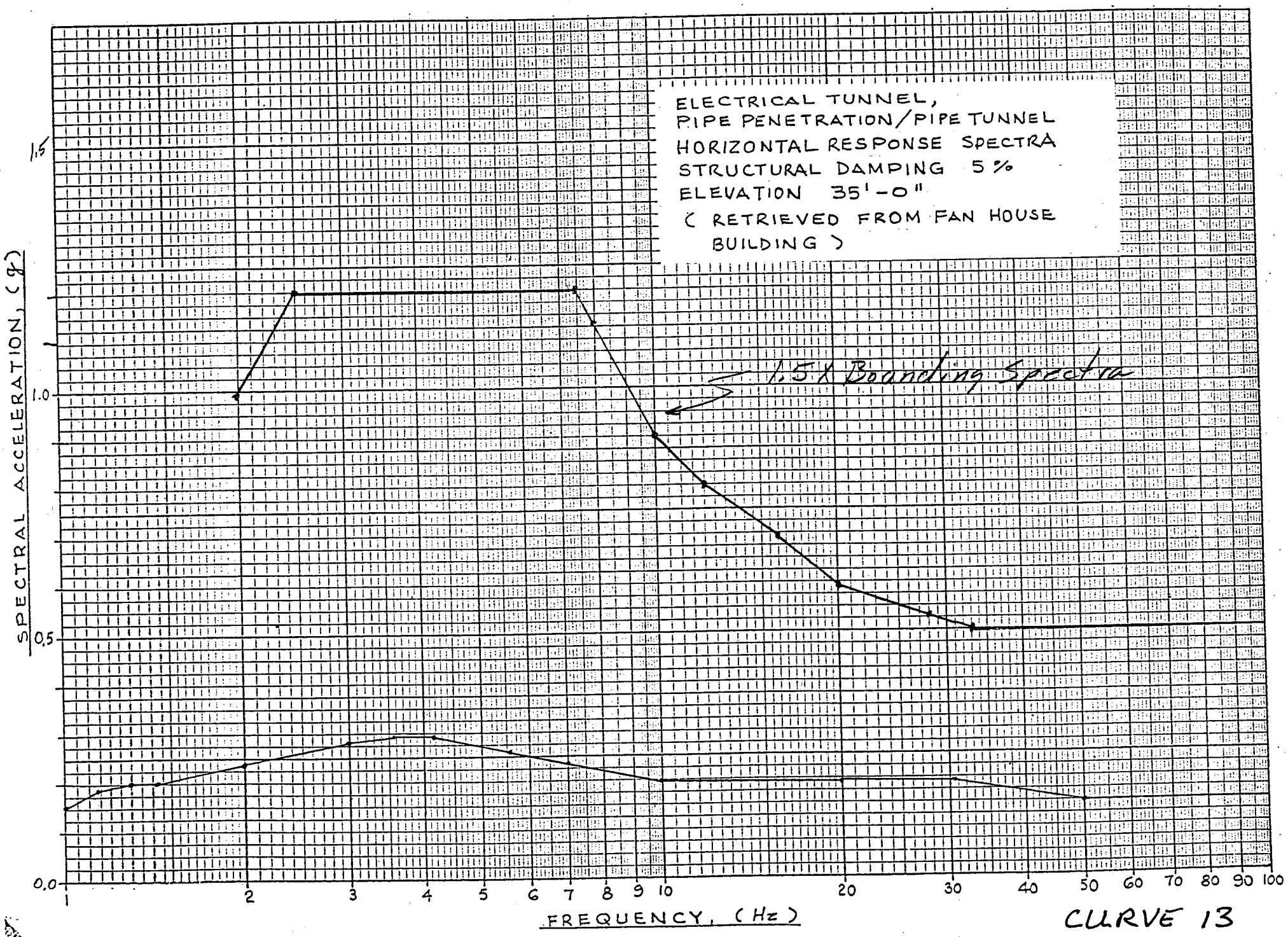
ELECTRICAL TUNNEL,
PIPE PENETRATION/PIPE TUNNEL
HORIZONTAL RESPONSE SPECTRA
STRUCTURAL DAMPING 5%
ELEVATION 35'-0"
(RETRIEVED FROM FAN HOUSE BUILDING)
1.5 X Boarding Spectra
SPECTRAL ACCELERATION, (g)
1.5
1.0
0.5
0.0
1
2
3
4
5
6
7
8
9
10
20
30
40
50
60
70
80
90
100
FREQUENCY, (Hz)

CURVE 13

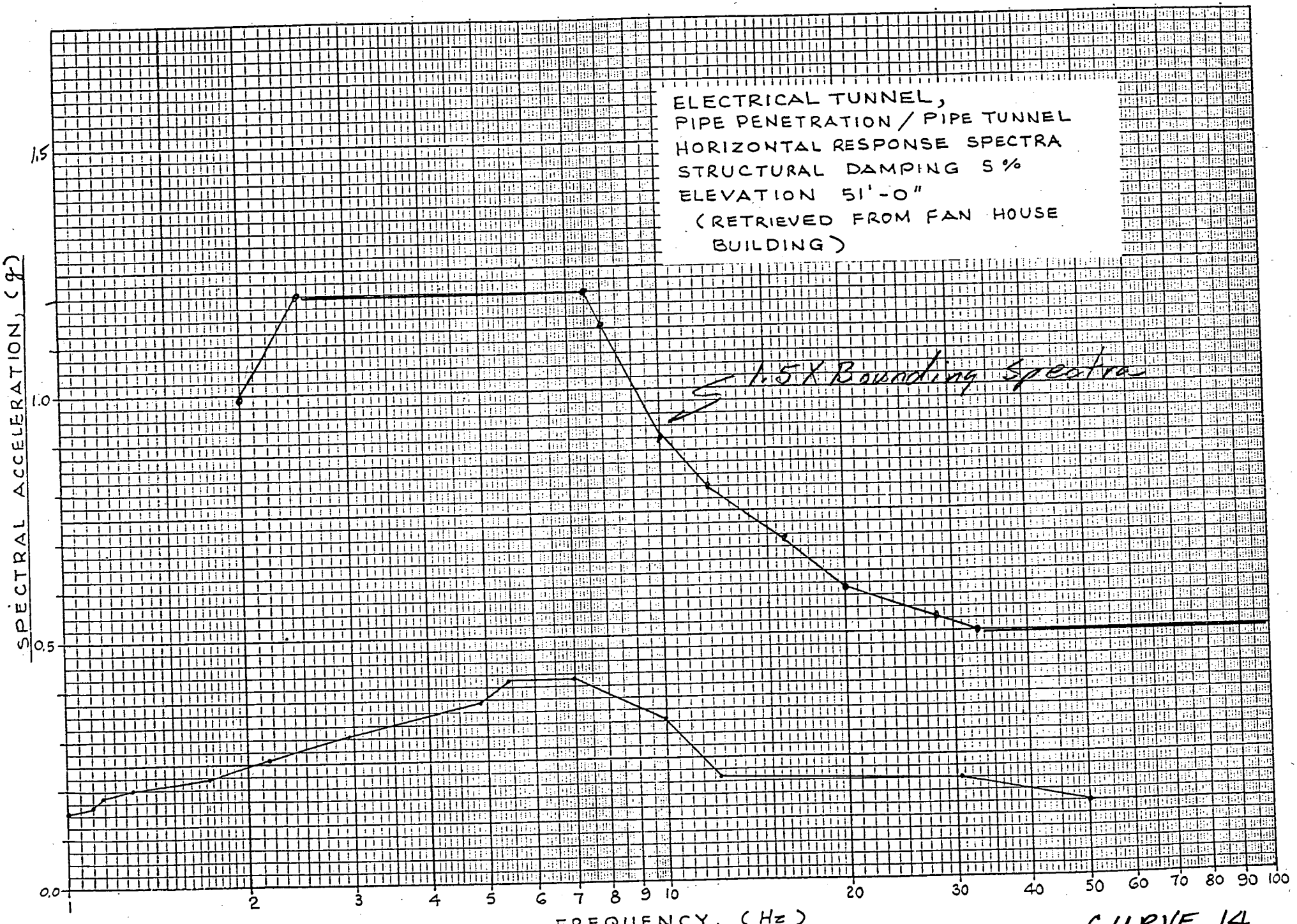
ELECTRICAL TUNNEL,
PIPE PENETRATION / PIPE TUNNEL
HORIZONTAL RESPONSE SPECTRA
STRUCTURAL DAMPING 5 %
ELEVATION 51'-0"
(RETRIEVED FROM FAN HOUSE BUILDING)
≤ 1.5 X Bounding Spectra
SPECTRAL ACCELERATION, (g)
1.5
1.0
0.5
0.0
1
2
3
4
5
6
7
8
9
10
20
30
40
50
60
70
80
90
100
FREQUENCY, (Hz)

CURVE 14

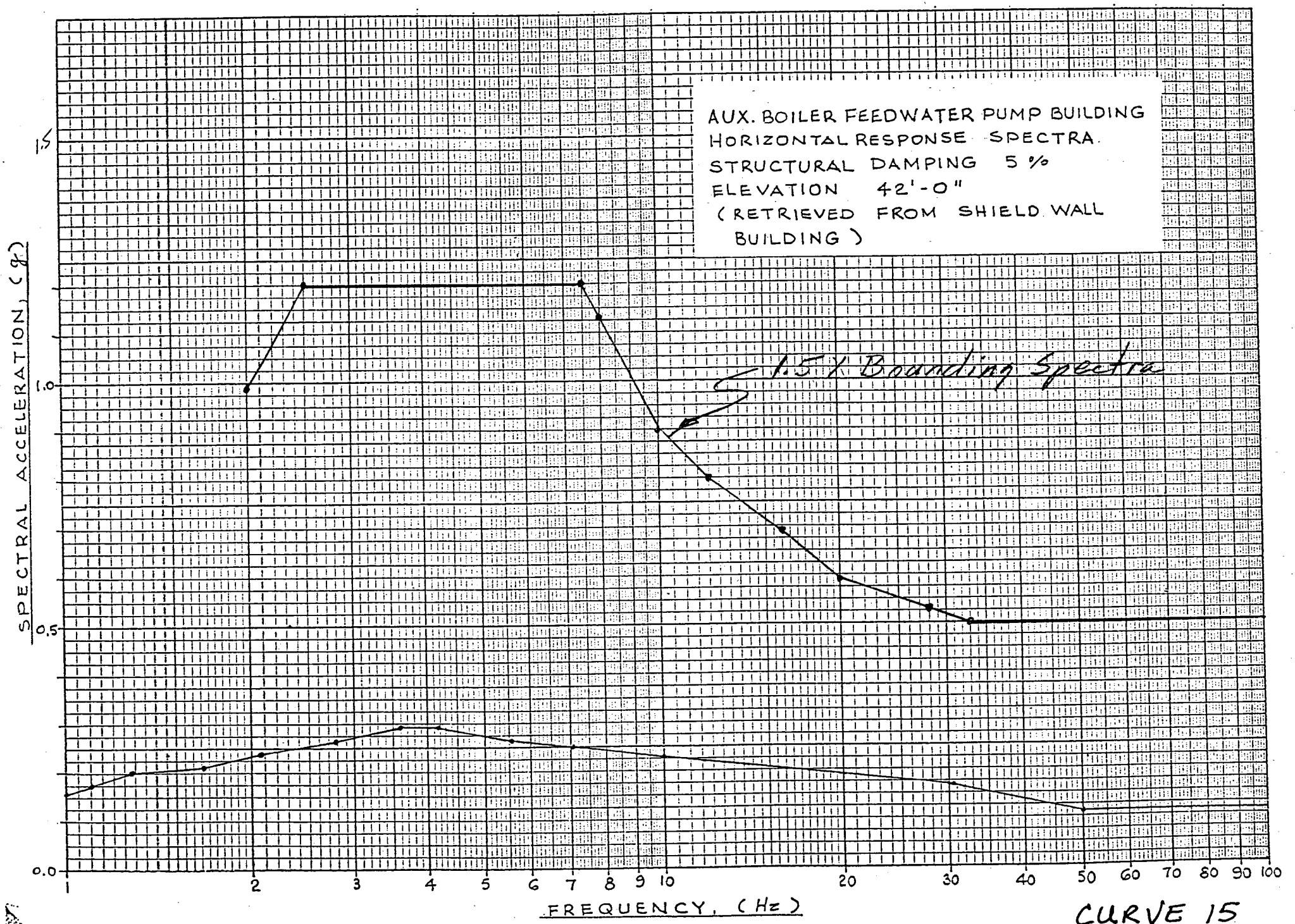
AUX. BOILER FEEDWATER PUMP BUILDING
HORIZONTAL RESPONSE SPECTRA.
STRUCTURAL DAMPING 5 %
ELEVATION 42'-0"
(RETRIEVED FROM SHIELD WALL BUILDING)
1.5 X Boarding Spectra
SPECTRAL ACCELERATION, (g)
1.5
1.0
0.5
0.0
1
2
3
4
5
6
7
8
9
10
20
30
40
50
60
70
80
90
100
FREQUENCY, (Hz)

CURVE 15

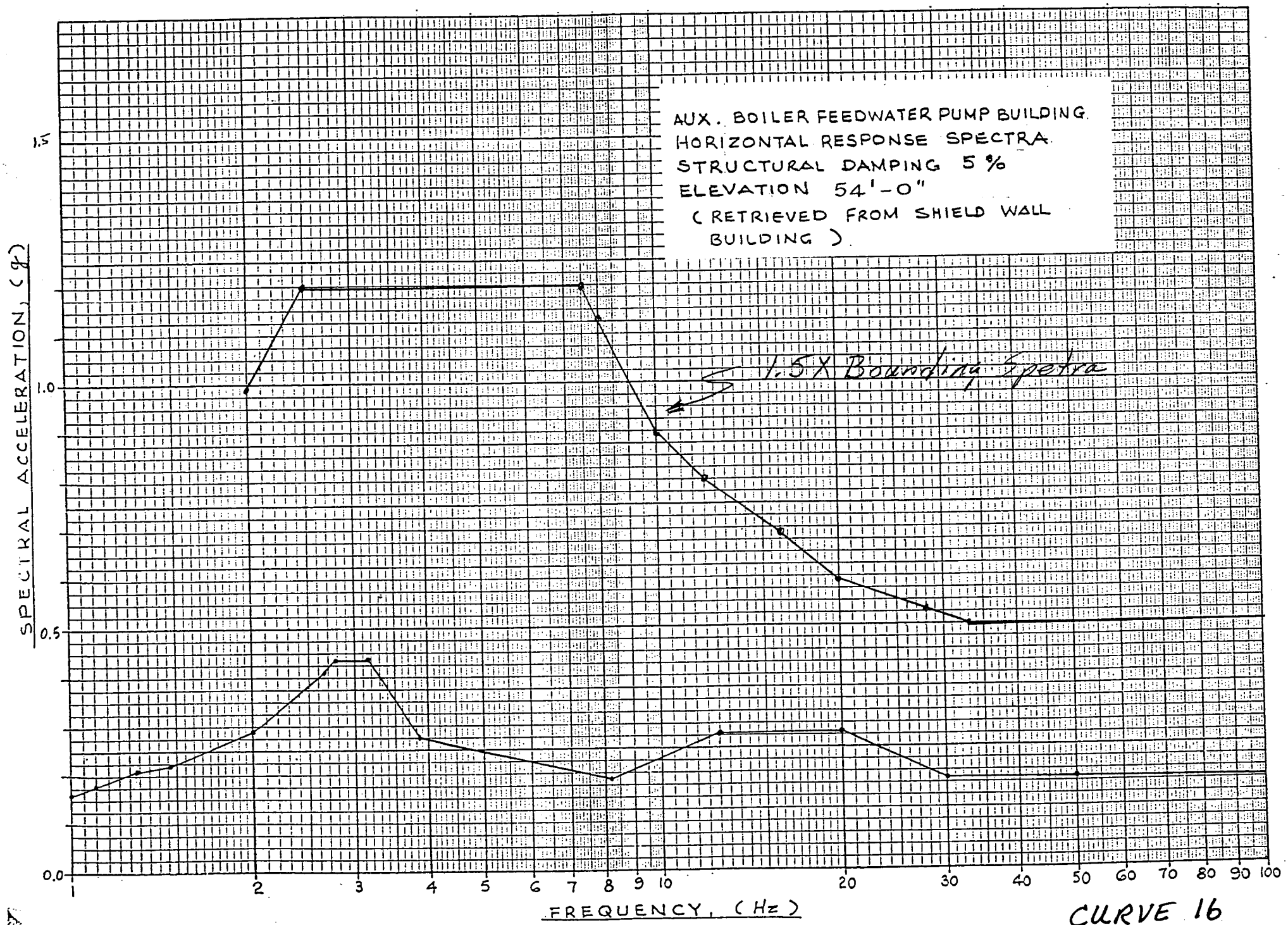
AUX. BOILER FEEDWATER PUMP BUILDING
HORIZONTAL RESPONSE SPECTRA
STRUCTURAL DAMPING 5 %
ELEVATION 54'-0"
(RETRIEVED FROM SHIELD WALL BUILDING)
1.5 X Bounding Spectra
SPECTRAL ACCELERATION, (g)
1.5
1.0
0.5
0.0
1
2
3
4
5
6
7
8
9
10
20
30
40
50
60
70
80
90
100
FREQUENCY, (Hz)

CURVE 16

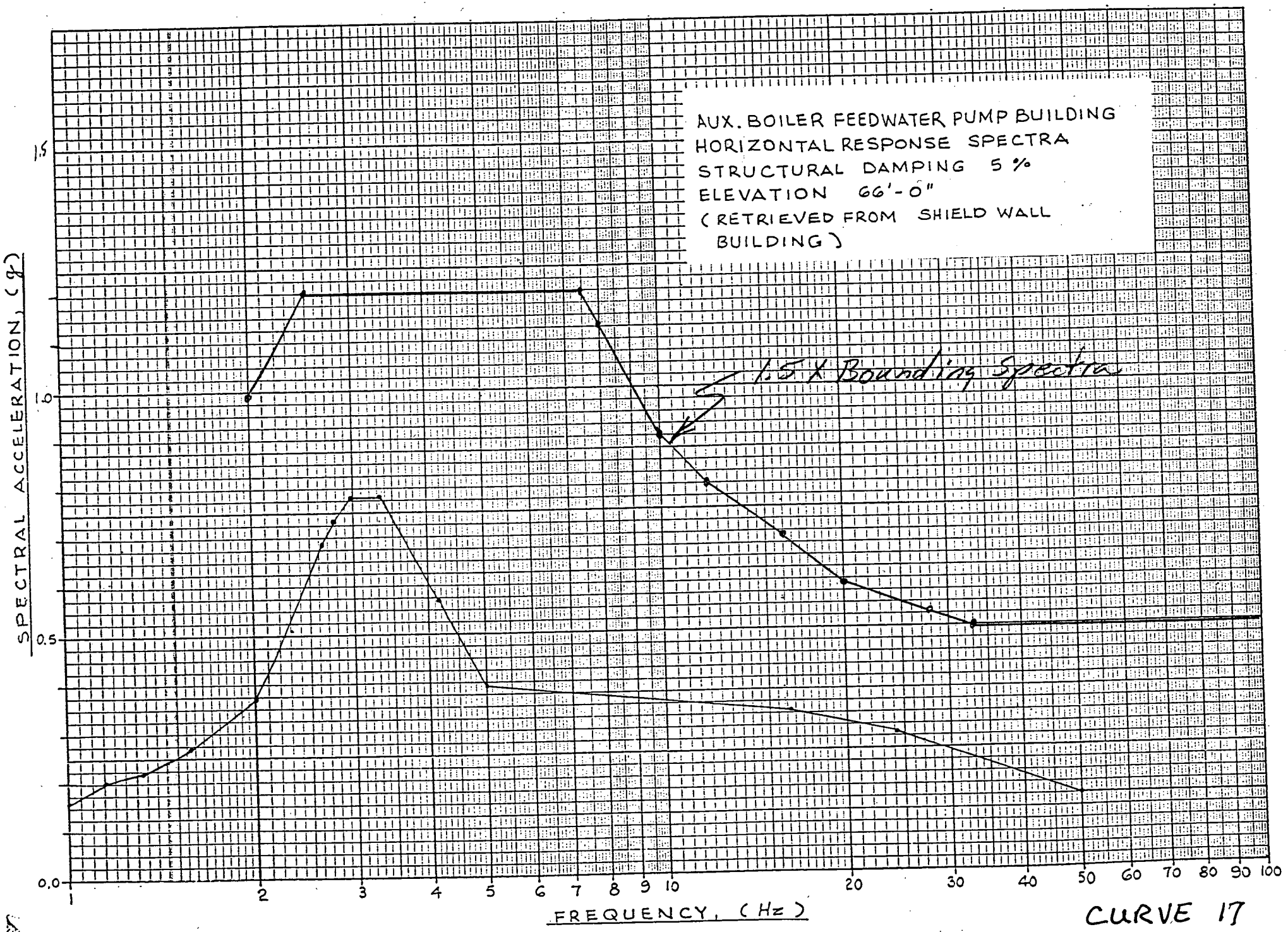
AUX. BOILER FEEDWATER PUMP BUILDING
HORIZONTAL RESPONSE SPECTRA
STRUCTURAL DAMPING 5 %
ELEVATION 66'-0"
(RETRIEVED FROM SHIELD WALL BUILDING)
1.5 X Bounding Spectra
SPECTRAL ACCELERATION, (g)
1.5
1.0
0.5
0.0
1
2
3
4
5
6
7
8
9
10
20
30
40
50
60
70
80
90
100
FREQUENCY, (Hz)

CURVE 17

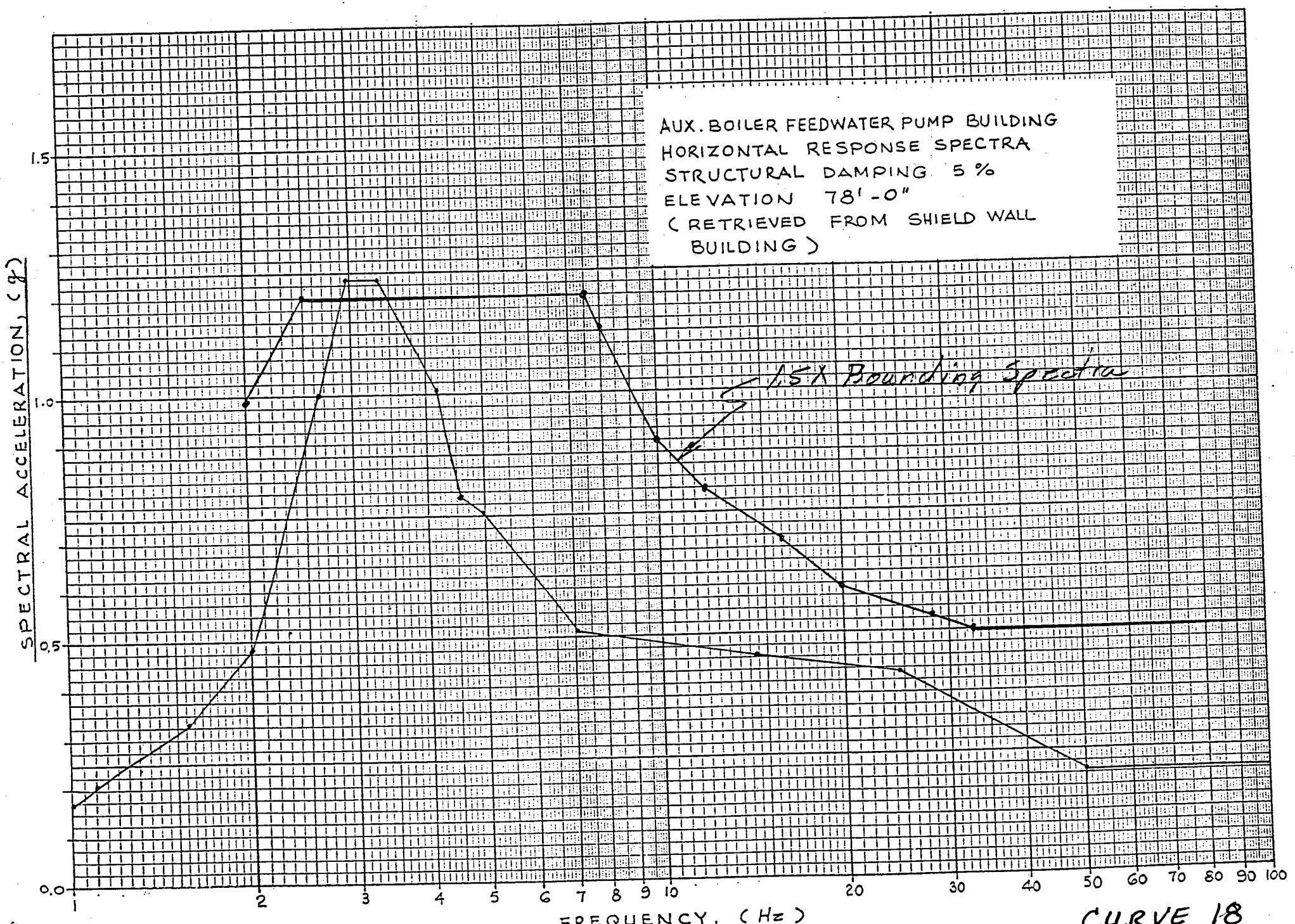
AUX. BOILER FEEDWATER PUMP BUILDING
HORIZONTAL RESPONSE SPECTRA
STRUCTURAL DAMPING 5 %
ELEVATION 78'-0"
(RETRIEVED FROM SHIELD WALL BUILDING)
1.5X Bounding Spectra
SPECTRAL ACCELERATION, (g)
1.5
1.0
0.5
0.0
1
2
3
4
5
6
7
8
9
10
20
30
40
50
60
70
80
90
100
FREQUENCY, (Hz)

CURVE 18

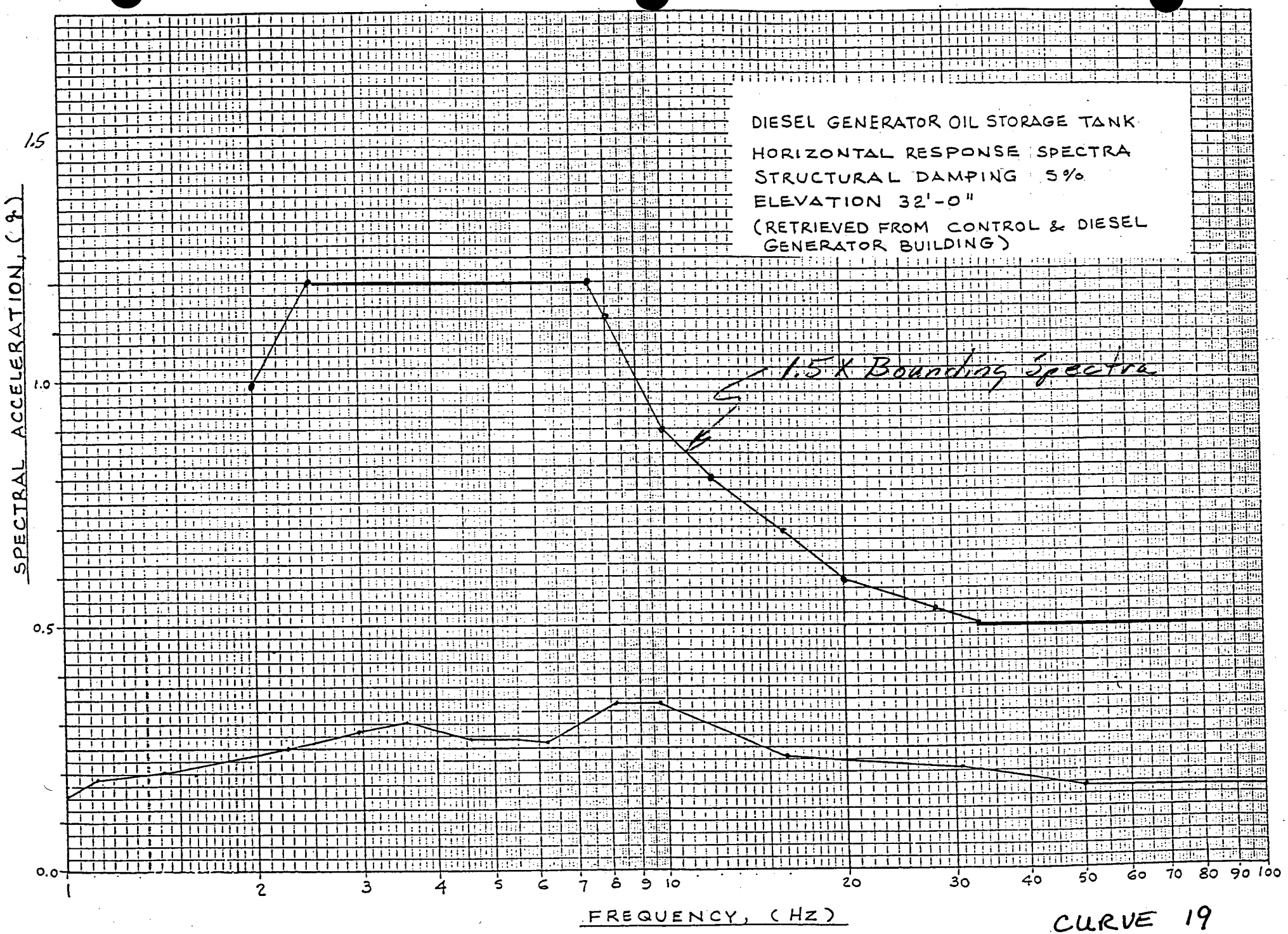
DIESEL GENERATOR OIL STORAGE TANK
HORIZONTAL RESPONSE SPECTRA
STRUCTURAL DAMPING 5%
ELEVATION 32'-0"
(RETRIEVED FROM CONTROL & DIESEL GENERATOR BUILDING)
1.5 X Bounding spectra
SPECTRAL ACCELERATION, (g)
1.5
1.0
0.5
0.0
1
2
3
4
5
6
7
8
9
10
20
30
40
50
60
70
80
90
100
FREQUENCY, (Hz)

CURVE 19

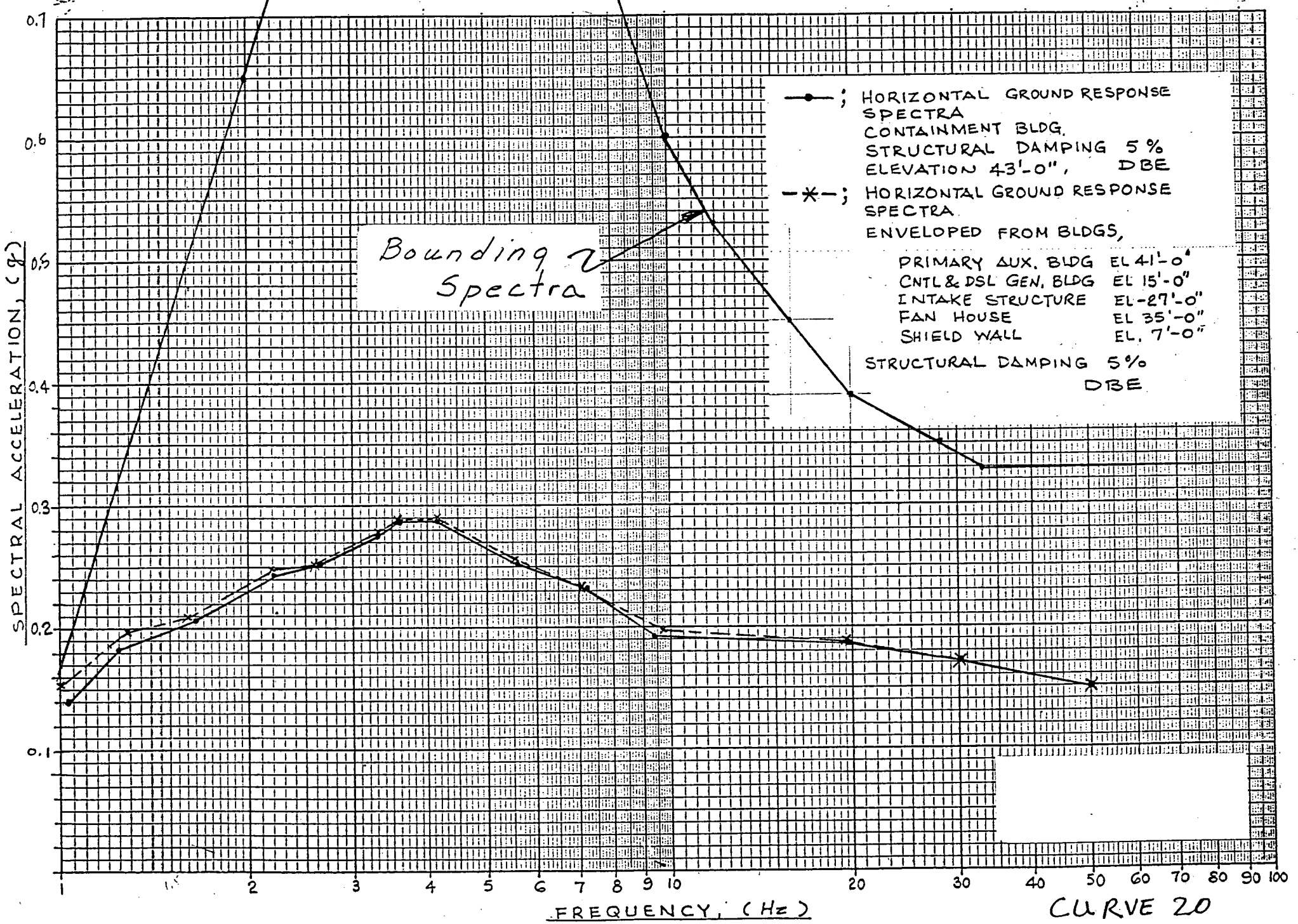
—●—; HORIZONTAL GROUND RESPONSE SPECTRA
CONTAINMENT BLDG.
STRUCTURAL DAMPING 5 %
ELEVATION 43'-0", DBE
—✱—; HORIZONTAL GROUND RESPONSE SPECTRA
ENVELOPED FROM BLDGS,
PRIMARY AUX. BLDG EL 41'-0"
CNTL & DSL GEN. BLDG EL 15'-0"
INTAKE STRUCTURE EL-27'-0"
FAN HOUSE EL 35'-0"
SHIELD WALL EL. 7'-0"
STRUCTURAL DAMPING 5%
DBE
Bounding Spectra
SPECTRAL ACCELERATION, (g)
0.1
0.2
0.3
0.4
0.5
0.6
0.7
1
2
3
4
5
6
7
8
9
10
20
30
40
50
60
70
80
90
100
FREQUENCY, (Hz)

CURVE 20

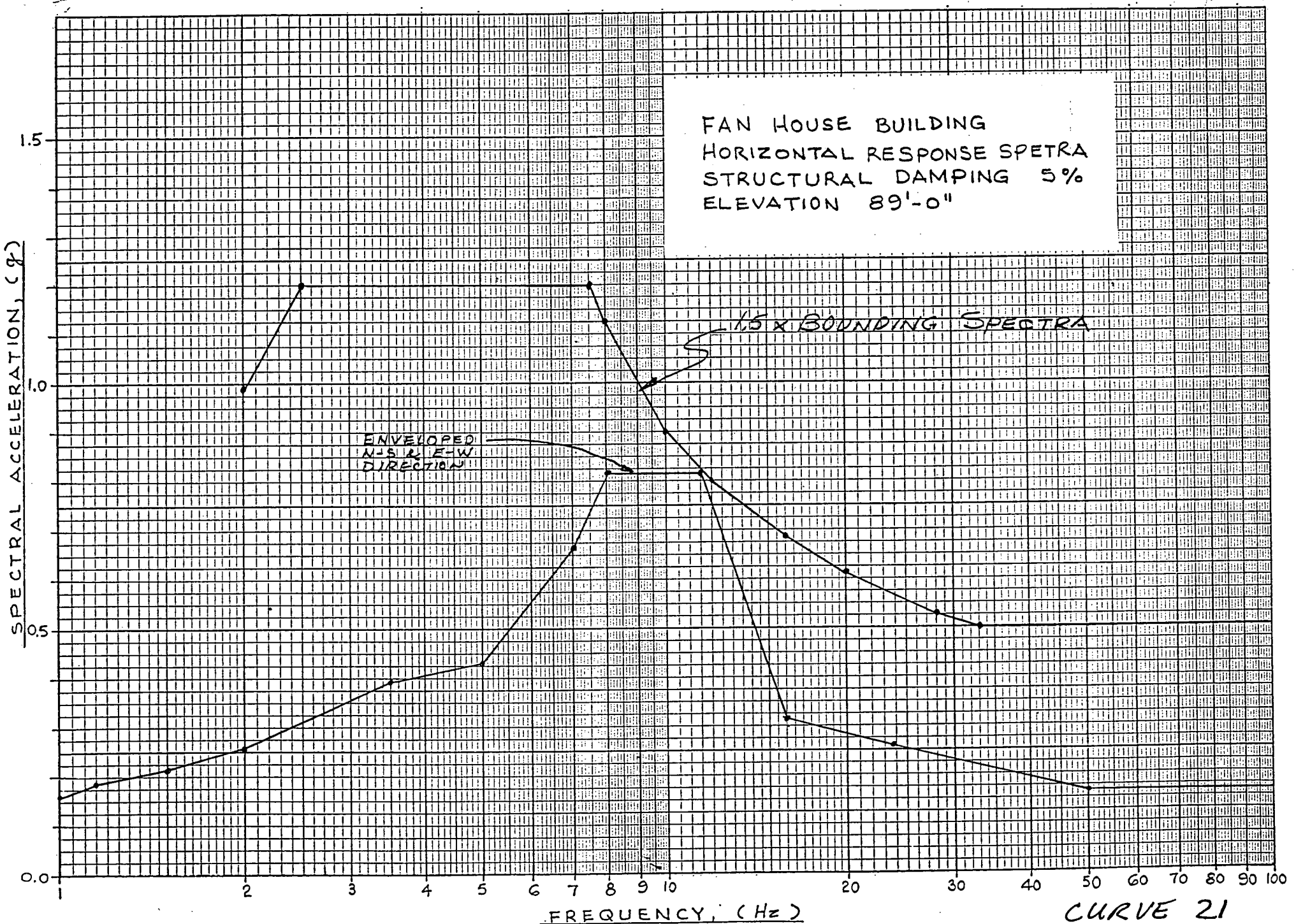
FAN HOUSE BUILDING
HORIZONTAL RESPONSE SPETRA
STRUCTURAL DAMPING 5%
ELEVATION 89'-0"
1.5 x BOUNDING SPECTRA
ENVELOPED N-S & E-W DIRECTION
SPECTRAL ACCELERATION, (g)
1.5
1.0
0.5
0.0
1
2
3
4
5
6
7
8
9
10
20
30
40
50
60
70
80
90
100
FREQUENCY, (Hz)

CURVE 21

APPENDIX D

SCREENING VERIFICATION DATA SHEETS
(SVDSs)

INDIAN POINT NUCLEAR GENERATING STATION UNIT 3
SCREENING VERIFICATION DATA SHEET (SVDS)

Line	Eq. Cl	Eq. ID	Rev No	Equipment Description	Bldg.	Fl. El.	Base El.	<40'?	Cap Spec.	Demd. Spec.	Cap > Demd?	Caveats OK?	Anchor OK?	Interact OK?	Equip OK?
1	0	0031OAL A	0	OUTSIDE AIR LOUVER 31 EDG	DG	44'-0"	44'-0"	Y	ABS	CRS	Y	N/A	Y	Y	N
2	0	0031OAL B	0	OUTSIDE AIR LOUVER 31 EDG	DG	44'-0"	44'-0"	Y	ABS	CRS	Y	N/A	Y	Y	N
3	0	0031OAL C	0	OUTSIDE AIR LOUVER 31 EDG	DG	44'-0"	44'-0"	Y	ABS	CRS	Y	N/A	Y	Y	N
4	0	0032OAL A	0	OUTSIDE AIR LOUVER 32 EDG	DG	44'-0"	44'-0"	Y	ABS	CRS	Y	N/A	Y	Y	N
5	0	0032OAL B	0	OUTSIDE AIR LOUVER 32 EDG	DG	44'-0"	44'-0"	Y	ABS	CRS	Y	N/A	Y	Y	N
6	0	0032OAL C	0	OUTSIDE AIR LOUVER 32 EDG	DG	44'-0"	44'-0"	Y	ABS	CRS	Y	N/A	Y	Y	N
7	0	0033OAL A	0	OUTSIDE AIR LOUVER 33 EDG	DG	44'-0"	44'-0"	Y	ABS	CRS	Y	N/A	Y	Y	N
8	0	0033OAL B	0	OUTSIDE AIR LOUVER 33 EDG	DG	44'-0"	44'-0"	Y	ABS	CRS	Y	N/A	Y	Y	N
9	0	0033OAL C	0	OUTSIDE AIR LOUVER 33 EDG	DG	44'-0"	44'-0"	Y	ABS	CRS	Y	N/A	Y	Y	N
10	0	T1	0	CR AC THERMOSTAT	CB	53'-0"	53'-0"	Y	ABS	CRS	Y	N/A	Y	N	N
11	01	MCC-32	0	480 VAC MCC	TB	15'-0"	15'-0"	Y	ABS	CRS	Y	Y	Y	Y	Y
12	01	MCC-33	0	480 VAC MCC	TB	15'-0"	15'-0"	Y	ABS	CRS	Y	Y	Y	Y	Y
13	01	MCC-34	0	480 VAC MCC	TB	15'-0"	15'-0"	Y	ABS	CRS	Y	Y	Y	Y	Y
14	01	MCC-36A	0	480 VAC MCC	PA	55'-0"	55'-0"	Y	ABS	CRS	Y	Y	Y	Y	Y
15	01	MCC-36A EXTENSION	0	480 VAC MCC	PA	55'-0"	55'-0"	Y	ABS	CRS	Y	N	Y	Y	N
16	01	MCC-36B	0	480 VAC MCC	PA	55'-0"	55'-0"	Y	ABS	CRS	Y	Y	Y	Y	Y
17	01	MCC-36B EXTENSION	0	480 VAC MCC	PA	55'-0"	55'-0"	Y	ABS	CRS	Y	Y	Y	Y	Y
18	01	MCC-36C	0	480 VAC MCC	CB	15'-0"	15'-0"	Y	ABS	CRS	Y	Y	Y	Y	Y
19	01	MCC-37	0	480 VAC MCC	PA	55'-0"	55'-0"	Y	ABS	CRS	Y	N	Y	Y	N
20	01	MCC-38	0	480 VAC MCC	VC	68'-0"	68'-0"	Y	ABS	CRS	Y	N	N	Y	N
21	01	MCC-39	0	480 VAC MCC	CB	33'-0"	33'-0"	Y	ABS	CRS	Y	N	N	Y	N
22	02	SWGR 31	0	480VAC SWGR 31 BUS 2A & 5A	CB	15'-0"	15'-0"	Y	ABS	CRS	Y	N	Y	N	N
23	02	SWGR 32	0	480VAC SWGR 32 BUS 3A & 6A	CB	15'-0"	15'-0"	Y	ABS	CRS	Y	N	Y	N	N
24	04	31 BK-UP HTR TRANSF.	0	#31 PRESSURIZER BACKUP HEATER XFMR (Dry Type)	CB	33'-0"	33'-0"	Y	BS	CRS	Y	Y	Y	Y	Y
25	04	32 BK-UP HTR TRANSF.	0	#32 PRESSURIZER BACKUP HEATER XFMR (Dry Type)	CB	33'-0"	33'-0"	Y	BS	CRS	Y	Y	Y	Y	Y
26	04	33 BK-UP HTR TRANSF.	0	#33 PRESSURIZER BACKUP HEATER XFMR (Dry Type)	CB	33'-0"	33'-0"	Y	BS	CRS	Y	Y	Y	Y	Y
27	04	B1G	0	480/120 VAC ELGAR XFMR (FOR IB-33,33A)	CB	33'-0"	33'-0"	Y	ABS	CRS	Y	Y	Y	Y	Y
28	04	BC2	0	480/120 VAC XFMR #32 (FOR IB-34,34A)	CB	33'-0"	33'-0"	Y	ABS	CRS	Y	Y	Y	Y	Y
29	04	BF8	0	120/120 VAC SOLATRON XFMR #32	CB	33'-0"	33'-0"	Y	ABS	CRS	Y	Y	N	Y	N
30	04	BG1	0	1KV SOLATRON XFMR 120V/120V	CB	33'-0"	33'-0"	Y	ABS	CRS	Y	Y	Y	Y	Y
31	04	BG2	0	1KV SOLATRON XFMR 120V/120V	CB	33'-0"	33'-0"	Y	ABS	CRS	Y	Y	Y	Y	Y
32	04	BG3	0	1KV SOLATRON XFMR 120V/120V	CB	33'-0"	33'-0"	Y	ABS	CRS	Y	Y	Y	Y	Y
33	04	BG4	0	1KV SOLATRON XFMR 120V/120V	CB	33'-0"	33'-0"	Y	ABS	CRS	Y	Y	Y	Y	Y
34	04	BI3	0	480/120 VAC SOLA XFMR (FOR IB-31,31A)	CB	33'-0"	33'-0"	Y	ABS	CRS	Y	Y	Y	Y	Y
35	04	BI4	0	480/120 VAC SOLA XFMR (FOR IB-32,32A)	CB	33'-0"	33'-0"	Y	ABS	CRS	Y	N	N	Y	N
36	04	BJ1	0	480/120 VAC SOLA XFMR (ALT FOR IB-34,34A)	CB	33'-0"	33'-0"	Y	ABS	CRS	Y	Y	Y	Y	Y
37	05	0031CLWP	0	31 I/A CMPR CL COOLING WTR PMP	CB	15'-0"	15'-0"	Y	ABS	CRS	Y	Y	Y	Y	Y

INDIAN POINT NUCLEAR GENERATING STATION UNIT 3
SCREENING VERIFICATION DATA SHEET (SVDS)

Line	Eq. Cl	Eq. ID	Rev No	Equipment Description	Bldg.	Fl. El.	Base El.	<40'?	Cap Spec.	Demd. Spec.	Cap > Demd?	Caveats OK?	Anchor OK?	Interact OK?	Equip OK?
38	05	0032CLWP	0	32 I/A CMPR CL COOLING WTR PMP	CB	15'-0"	15'-0"	Y	ABS	CRS	Y	Y	Y	Y	Y
39	05	31PWMUP	0	31 PRIMARY WATER MAKEUP PUMP	PA	41'-0"	41'-0"	Y	ABS	CRS	Y	Y	Y	Y	Y
40	05	32PWMUP	0	32 PRIMARY WATER MAKEUP PUMP	PA	41'-0"	41'-0"	Y	ABS	CRS	Y	Y	Y	Y	Y
41	05	ABFP-31	0	MOTOR DRIVEN AUX. FW PUMP NO. 31	AB	18'-6"	18'-6"	Y	ABS	CRS	Y	Y	Y	Y	Y
42	05	ABFP-32	0	TURBINE DRIVEN AUX. FW PUMP NO. 32	AB	18'-6"	18'-6"	Y	ABS	CRS	Y	Y	Y	Y	Y
43	05	ABFP-33	0	MOTOR DRIVEN AUX. FW PUMP NO. 33	AB	18'-6"	18'-6"	Y	ABS	CRS	Y	Y	Y	Y	Y
44	05	ACAPCC1	0	CCW PUMP NO 31	PA	41'-0"	41'-0"	Y	ABS	CRS	Y	Y	Y	Y	Y
45	05	ACAPCC2	0	CCW PUMP NO. 32	PA	41'-0"	41'-0"	Y	ABS	CRS	Y	Y	Y	Y	Y
46	05	ACAPCC3	0	CCW PUMP NO 33	PA	41'-0"	41'-0"	Y	ABS	CRS	Y	Y	Y	Y	Y
47	05	CSAPBA1	0	BORIC ACID TRANSFER PUMP 31	PA	55'-0"	55'-0"	Y	ABS	CRS	Y	Y	Y	Y	Y
48	05	CSAPBA2	0	BORIC ACID TRANSFER PUMP 32	PA	55'-0"	55'-0"	Y	ABS	CRS	Y	Y	Y	Y	Y
49	05	CSAPCH1	0	NO. 31 CHARGING PUMP	PA	55'-0"	55'-0"	Y	ABS	CRS	Y	Y	Y	Y	Y
50	05	CSAPCH2	0	NO. 32 CHARGING PUMP	PA	55'-0"	55'-0"	Y	ABS	CRS	Y	Y	Y	Y	Y
51	05	CSAPCH3	0	NO. 33 CHARGING PUMP	PA	55'-0"	55'-0"	Y	ABS	CRS	Y	Y	Y	Y	Y
52	05	EDG-31-LO-P	0	DG 31 ENGINE DRIVER LUBE OIL PUMP	DG	15'-0"	15'-0"	Y	ABS	CRS	Y	Y	Y	Y	Y
53	05	EDG-32-LO-P	0	DG 32 ENGINE DRIVER LUBE OIL PUMP	DG	15'-0"	15'-0"	Y	ABS	CRS	Y	Y	Y	Y	Y
54	05	EDG-33-LO-P	0	DG 33 ENGINE DRIVER LUBE OIL PUMP	DG	15'-0"	15'-0"	Y	ABS	CRS	Y	Y	Y	Y	Y
55	06	31 DG FUEL XFER PUMP	0	F.O. TRANSFER PUMP	YD	38'-6"	38'-6"	Y	ABS	CRS	Y	Y	Y	Y	Y
56	06	31 SW PUMP (M)	0	31 SERVICE WATER PUMP	IS	15'-0"	15'-0"	Y	ABS	CRS	Y	Y	Y	Y	Y
57	06	32 DG FUEL XFER PUMP	0	F.O. TRANSFER PUMP	YD	38'-0"	38'-0"	Y	ABS	CRS	Y	Y	Y	Y	Y
58	06	32 SW PUMP (M)	0	32 SERVICE WATER PUMP	IS	15'-0"	15'-0"	Y	ABS	CRS	Y	Y	Y	Y	Y
59	06	33 DG FUEL XFER PUMP	0	F.O. TRANSFER PUMP	YD	38'-0"	38'-0"	Y	ABS	CRS	Y	Y	Y	Y	Y
60	06	33 SW PUMP (M)	0	33 SERVICE WATER PUMP	IS	15'-0"	15'-0"	Y	ABS	CRS	Y	Y	Y	Y	Y
61	06	34 SW PUMP (M)	0	34 SERVICE WATER PUMP	IS	15'-0"	15'-0"	Y	ABS	CRS	Y	Y	Y	Y	Y
62	06	35 SW PUMP (M)	0	35 SERVICE WATER PUMP	IS	15'-0"	15'-0"	Y	ABS	CRS	Y	Y	Y	Y	Y
63	06	36 SW PUMP (M)	0	36 SERVICE WATER PUMP	IS	15'-0"	15'-0"	Y	ABS	CRS	Y	Y	Y	Y	Y
64	06	ACAPRH1	0	31 RHR PUMP	PA	15'-0"	15'-0"	Y	ABS	CRS	Y	Y	Y	Y	Y
65	06	ACAPRH2	0	32 RHR PUMP	PA	15'-0"	15'-0"	Y	ABS	CRS	Y	Y	Y	Y	Y
66	07	953	0	PZR LIQ SPC SAMPLE LINE	VC	73'-6"	73'-6"	N	ABS	CRS	Y	Y	N/A	Y	Y
67	07	955A	0	31 HL SAMPLE LINE	VC	62'-0"	62'-0"	N	ABS	CRS	Y	Y	N/A	Y	Y
68	07	955B	0	33 HL SAMPLE LINE	VC	62'-0"	62'-0"	N	ABS	CRS	Y	Y	N/A	Y	Y
69	07	956C	0	PZR LIQ SPACE SAMPLE LINE	PP	41'-0"	41'-0"	Y	ABS	CRS	Y	Y	N/A	Y	Y
70	07	956D	0	PZR LIQ SPACE SAMPLE LINE	PP	41'-0"	41'-0"	Y	ABS	CRS	Y	Y	N/A	Y	Y
71	07	956E	0	RCS HL SAMPLE LINE ISO VLV	PP	41'-0"	41'-0"	Y	ABS	CRS	Y	Y	N/A	Y	Y
72	07	956F	0	RCS HL SAMPLE LINE ISO VLV	PP	41'-0"	41'-0"	Y	ABS	CRS	Y	Y	N/A	Y	Y
73	07	958	0	RHR SAMPLE LINE	PP	41'-0"	41'-0"	Y	ABS	CRS	Y	Y	N/A	Y	Y
74	07	959	0	RHR SAMPLE LINE	PP	41'-0"	41'-0"	Y	ABS	CRS	Y	Y	N/A	Y	Y

INDIAN POINT NUCLEAR GENERATING STATION UNIT 3
SCREENING VERIFICATION DATA SHEET (SVDS)

Line	Eq. Cl	Eq. ID	Rev No	Equipment Description	Bldg.	Fl. El.	Base El.	<40'?	Cap Spec.	Demd. Spec.	Cap > Demd?	Caveats OK?	Anchor OK?	Interact OK?	Equip OK?
75	07	AC-791	0	CCW TO EXC L/DN HX-31 ISO VLV	PP	51'-0"	51'-0"	Y	ABS	CRS	Y	Y	N/A	Y	Y
76	07	AC-793	0	CCW RETRN FR EXC L/D ISO VLV	PP	51'-0"	51'-0"	Y	ABS	CRS	Y	Y	N/A	Y	Y
77	07	AC-796	0	CCW RETRN FR EXC L/DN HX-31 ISO VLV	PP	51'-0'	51'-0'	Y	ABS	CRS	Y	Y	N/A	Y	Y
78	07	AC-798	0	CCW TO EXC L/DN HX-31 ISO VLV	PP	51'-0"	51'-0"	Y	ABS	CRS	Y	Y	N/A	Y	Y
79	07	BFD-FCV-1121	0	31AFP RECIRC LINE CTRL VLV	AB	18'-6"	18'-6"	Y	ABS	CRS	Y	Y	N/A	Y	Y
80	07	BFD-FCV-1123	0	33AFP RECIRC LINE CTRL VLV	AB	18'-6"	18'-6"	Y	ABS	CRS	Y	Y	N/A	Y	Y
81	07	BFD-FCV-405A	0	NO.32 AFWP MAN FLOW CNTRL TO 31 SG	AB	18'-6"	18'-6"	Y	ABS	CRS	Y	Y	N/A	Y	Y
82	07	BFD-FCV-405B	0	NO.32 AFWP MAN FLOW CNTRL TO 32 SG	AB	18'-6"	18'-6"	Y	ABS	CRS	Y	Y	N/A	Y	Y
83	07	BFD-FCV-405C	0	NO.32 AFWP MAN FLOW CNTRL TO 33 SG	AB	18'-6"	18'-6"	Y	ABS	CRS	Y	Y	N/A	Y	Y
84	07	BFD-FCV-405D	0	NO.32 AFWP MAN FLOW CNTRL TO 34 SG	AB	18'-6"	18'-6"	Y	ABS	CRS	Y	Y	N/A	Y	Y
85	07	BFD-FCV-406A	0	NO.31 AFWP MAN FLOW CNTRL TO 31 SG	AB	18'-6"	18'-6"	Y	ABS	CRS	Y	Y	N/A	Y	Y
86	07	BFD-FCV-406B	0	NO.31 AFWP MAN FLOW CNTRL TO 32 SG	AB	18'-6"	18'-6"	Y	ABS	CRS	Y	Y	N/A	Y	Y
87	07	BFD-FCV-406C	0	NO.33 AFWP MAN FLOW CNTRL TO 33 SG	AB	18'-6"	18'-6"	Y	ABS	CRS	Y	Y	N/A	Y	Y
88	07	BFD-FCV-406D	0	NO.33 AFWP MAN FLOW CNTRL TO 34 SG	AB	18'-6"	18'-6"	Y	ABS	CRS	Y	Y	N/A	Y	Y
89	07	CH-201	0	LETDN LINE ISO VLV	PP	51'-0"	51'-0"	Y	ABS	CRS	Y	Y	N/A	Y	Y
90	07	CH-202	0	LETDN LINE ISO VLV	PP	51'-0"	51'-0"	Y	ABS	CRS	Y	Y	N/A	Y	Y
91	07	CH-310	0	DEBORATING DEMIN DIVERSION	PA	42'-0"	42'-0"	Y	ABS	CRS	Y	Y	N/A	Y	Y
92	07	CH-AOV-200A	0	LETDOWN ORIFICE ISO VLV	VC	46'-0"	46'-0"	Y	ABS	CRS	Y	Y	N/A	Y	Y
93	07	CH-AOV-200B	0	LETDOWN ORIFICE ISO VLV	VC	46'-0"	46'-0"	Y	ABS	CRS	Y	Y	N/A	Y	Y
94	07	CH-AOV-200C	0	LETDOWN ORIFICE ISO VLV	VC	46'-0"	46'-0"	Y	ABS	CRS	Y	Y	N/A	Y	Y
95	07	CH-AOV-204A	0	ALT CHG FLOW NO 2 HOT LEG CTRL VLV	VC	58'-0"	58'-0"	Y	ABS	CRS	Y	Y	N/A	Y	Y
96	07	CH-AOV-204B	0	CHG FLOW NO 1 COLD LEG CTRL VLV	VC	46'-0"	46'-0"	Y	ABS	CRS	Y	Y	N/A	Y	Y
97	07	CH-AOV-212	0	AUX SPRAY CTRL VLV	VC	46'-0"	46'-0"	Y	ABS	CRS	Y	Y	N/A	Y	Y
98	07	CH-AOV-213A	0	EXCESS LETDOWN CTRL VLV	VC	46'-0"	46'-0"	Y	ABS	CRS	Y	Y	N/A	Y	Y
99	07	CH-AOV-213B	0	EXCESS LETDOWN CTRL VLV	VC	46'-0"	46'-0"	Y	ABS	CRS	Y	Y	N/A	Y	Y
100	07	CH-AOV-215	0	EXC LETDN LINE DIVERSION CTRL VLV	VC	46'-0"	46'-0"	Y	ABS	CRS	Y	Y	N/A	Y	Y
101	07	CH-AOV-246	0	RCP SEAL NO. 1 BYPASS VLV TO VCT	VC	53'-0"	53'-0"	Y	ABS	CRS	Y	Y	N/A	Y	Y
102	07	CH-AOV-261A	0	31 RCP SEAL DISCHARGE	VC	79'-0"	79'-0"	Y	ABS	CRS	Y	Y	N/A	Y	Y
103	07	CH-AOV-261B	0	32 RCP SEAL DISCHARGE	VC	79'-0"	79'-0"	Y	ABS	CRS	Y	Y	N/A	Y	Y
104	07	CH-AOV-261C	0	33 RCP SEAL DISCHARGE	VC	79'-0'	79'-0'	Y	ABS	CRS	Y	Y	N/A	Y	Y
105	07	CH-AOV-261D	0	34 RCP SEAL DISCHARGE	VC	79'-0"	79'-0"	Y	ABS	CRS	Y	Y	N/A	Y	Y
106	07	CH-FCV-110A	0	BORIC ACID FLOW CTRL	PA	80'-0"	80'-0"	Y	ABS	CRS	Y	Y	N/A	Y	Y
107	07	CH-FCV-110B	0	BORIC ACID BLNDR OUTLET	PA	73'-0"	73'-0"	Y	ABS	CRS	Y	Y	N/A	Y	Y
108	07	CH-FCV-111A	0	PRIMARY WTR MAKEUP VLV	PA	78'-0"	78'-0"	Y	ABS	CRS	Y	Y	N/A	Y	Y
109	07	CH-FCV-111B	0	BLENDER FLOW TO VCT CTRL VLV	PA	78'-0"	78'-0"	Y	ABS	CRS	Y	Y	N/A	N	N
110	07	CH-HCV-123	0	EXCESS LETDOWN HX OUTFLOW CTRL VLV	VC	46-0"	46-0"	Y	ABS	CRS	Y	Y	N/A	Y	Y
111	07	CH-HCV-133	0	RHR HTX OUTLET TO CVCS	VC	55'-3"	55'-3"	Y	ABS	CRS	Y	Y	N/A	Y	Y

INDIAN POINT NUCLEAR GENERATING STATION UNIT 3
SCREENING VERIFICATION DATA SHEET (SVDS)

Line	Eq. Cl	Eq. ID	Rev No	Equipment Description	Bldg.	Fl. El.	Base El.	<40'?	Cap Spec.	Demd. Spec.	Cap > Demd?	Caveats OK?	Anchor OK?	Interact OK?	Equip OK?
112	07	CH-HCV-142	0	REGEN HX FLOW CTRL	PP	41'-0"	41'-0"	Y	ABS	CRS	Y	Y	N/A	Y	Y
113	07	CH-LCV-112A	0	MAKE-UP TO VCT 3-WAY VLV	PA	80'-0"	80'-0"	Y	ABS	CRS	Y	Y	N/A	Y	Y
114	07	CH-LCV-459	0	LETDOWN CTRL VLV	VC	79'-0"	79'-0"	Y	ABS	CRS	Y	Y	N/A	Y	Y
115	07	CH-LCV-460	0	LETDOWN CTRL VLV	VC	51'-1"	51'-1"	Y	ABS	CRS	Y	Y	N/A	Y	Y
116	07	CH-PCV-113A	0	VCT H2 REGULATOR	PA	75'-0"	75'-0"	Y	ABS	CRS	Y	Y	N/A	Y	Y
117	07	CH-PCV-114	0	VCT N2 REGULATOR	PA	74'-0"	74'-0"	Y	ABS	CRS	Y	Y	N/A	Y	Y
118	07	CH-PCV-135	0	LETDOWN BP CONTROL	PA	75'-0"	75'-0"	Y	ABS	CRS	Y	Y	N/A	Y	Y
119	07	CH-TCV-149	0	DEMIN BYPASS VLV	PA	80'-0"	80'-0"	Y	ABS	CRS	Y	Y	N/A	Y	Y
120	07	DF-LCV-1207A	0	31 EDG FODT CNTRL VLV	DG	26'-0"	26'-0"	Y	ABS	CRS	Y	Y	N/A	Y	Y
121	07	DF-LCV-1207B	0	31 EDG FODT CNTRL VLV	DG	26'-0"	26'-0"	Y	ABS	CRS	Y	Y	N/A	Y	Y
122	07	DF-LCV-1208A	0	32 EDG FODT CNTRL VLV	DG	26'-0"	26'-0"	Y	ABS	CRS	Y	Y	N/A	Y	Y
123	07	DF-LCV-1208B	0	32 EDG FODT CNTRL VLV	DG	26'-0"	26'-0"	Y	ABS	CRS	Y	Y	N/A	Y	Y
124	07	DF-LCV-1209A	0	33 EDG FODT CNTRL VLV	DG	26'-0"	26'-0"	Y	ABS	CRS	Y	Y	N/A	Y	Y
125	07	DF-LCV-1209B	0	33 EDG FODT CNTRL VLV	DG	26'-0"	26'-0"	Y	ABS	CRS	Y	Y	N/A	Y	Y
126	07	FCV-1176	0	EDG JW/LO CLRS RET HDR FLOW CONT. VLV.	DG	15'-0"	15'-0"	Y	ABS	CRS	Y	Y	N/A	Y	Y
127	07	FCV-1176A	0	EDG JW/LO CLRS RET HDR FLOW CONT. VLV	DG	15'-0"	15'-0"	Y	ABS	CRS	Y	Y	N/A	Y	Y
128	07	HCV-1118	0	32 AFWP TURB SPEED CONTROL VLV	AB	18'-6"	18'-6"	Y	ABS	CRS	Y	Y	N/A	Y	Y
129	07	LCV-1158-1	0	CST LO LVL CONTROL VLV	AB	18'-6"	18'-6"	Y	ABS	CRS	Y	Y	N/A	Y	Y
130	07	LCV-1158-2	0	CST LO LVL CONTROL VLV	AB	18'-6"	18'-6"	Y	ABS	CRS	Y	Y	N/A	Y	Y
131	07	MS-1-31	0	31 SG MSIV	AB	77'-0"	77'-0"	N	ABS	CRS	Y	Y	N/A	Y	Y
132	07	MS-1-32	0	32 SG MSIV	AB	65'-0"	65'-0"	N	ABS	CRS	Y	Y	N/A	Y	Y
133	07	MS-1-33	0	33 SG MSIV	AB	77'-0"	77'-0"	N	ABS	CRS	Y	Y	N/A	Y	Y
134	07	MS-1-34	0	34 SG MSIV	AB	65'-0"	65'-0"	N	ABS	CRS	Y	Y	N/A	Y	Y
135	07	MS-45-1	0	STEAM GEN 31 SAFETY RELIEF VLV	AB	77'-0"	77'-0"	N	ABS	CRS	Y	Y	N/A	Y	Y
136	07	MS-45-2	0	STEAM GEN 32 SAFETY RELIEF VLV	AB	77'-0"	77'-0"	N	ABS	CRS	Y	Y	N/A	Y	Y
137	07	MS-45-3	0	STEAM GEN 33 SAFETY RELIEF VLV	AB	77'-0"	77'-0"	N	ABS	CRS	Y	Y	N/A	Y	Y
138	07	MS-45-4	0	STEAM GEN 34 SAFETY RELIEF VLV	AB	77'-0"	77'-0"	N	ABS	CRS	Y	Y	N/A	Y	Y
139	07	MS-46-1	0	STEAM GEN 31 SAFETY RELIEF VLV	AB	77'-0"	77'-0"	N	ABS	CRS	Y	Y	N/A	Y	Y
140	07	MS-46-2	0	STEAM GEN 32 SAFETY RELIEF VLV	AB	77'-0"	77'-0"	N	ABS	CRS	Y	Y	N/A	Y	Y
141	07	MS-46-3	0	STEAM GEN 33 SAFETY RELIEF VLV	AB	77'-0"	77'-0"	N	ABS	CRS	Y	Y	N/A	Y	Y
142	07	MS-46-4	0	STEAM GEN 34 SAFETY RELIEF VLV	AB	77'-0"	77'-0"	N	ABS	CRS	Y	Y	N/A	Y	Y
143	07	MS-47-1	0	STEAM GEN 31 SAFETY RELIEF VLV	AB	77'-0"	77'-0"	N	ABS	CRS	Y	Y	N/A	Y	Y
144	07	MS-47-2	0	STEAM GEN 32 SAFETY RELIEF VLV	AB	77'-0"	77'-0"	N	ABS	CRS	Y	Y	N/A	Y	Y
145	07	MS-47-3	0	STEAM GEN 33 SAFETY RELIEF VLV	AB	77'-0"	77'-0"	N	ABS	CRS	Y	Y	N/A	Y	Y
146	07	MS-47-4	0	STEAM GEN 34 SAFETY RELIEF VLV	AB	77'-0"	77'-0"	N	ABS	CRS	Y	Y	N/A	Y	Y
147	07	MS-48-1	0	STEAM GEN 31 SAFETY RELIEF VLV	AB	77'-0"	77'-0"	N	ABS	CRS	Y	Y	N/A	Y	Y
148	07	MS-48-2	0	STEAM GEN 32 SAFETY RELIEF VLV	AB	77'-0"	77'-0"	N	ABS	CRS	Y	Y	N/A	Y	Y

INDIAN POINT NUCLEAR GENERATING STATION UNIT 3
SCREENING VERIFICATION DATA SHEET (SVDS)

Line	Eq. Cl	Eq. ID	Rev No	Equipment Description	Bldg.	Fl. El.	Base El.	<40'?	Cap Spec.	Demd. Spec.	Cap > Demd?	Caveats OK?	Anchor OK?	Interact OK?	Equip OK?
149	07	MS-48-3	0	STEAM GEN 33 SAFETY RELIEF VLV	AB	77'-0"	77'-0"	N	ABS	CRS	Y	Y	N/A	Y	Y
150	07	MS-48-4	0	STEAM GEN 34 SAFETY RELIEF VLV	AB	77'-0"	77'-0"	N	ABS	CRS	Y	Y	N/A	Y	Y
151	07	MS-49-1	0	STEAM GEN 31 SAFETY RELIEF VLV	AB	77'-0"	77'-0"	N	ABS	CRS	Y	Y	N/A	Y	Y
152	07	MS-49-2	0	STEAM GEN 32 SAFETY RELIEF VLV	AB	77'-0"	77'-0"	N	ABS	CRS	Y	Y	N/A	Y	Y
153	07	MS-49-3	0	STEAM GEN 33 SAFETY RELIEF VLV	AB	77'-0"	77'-0"	N	ABS	CRS	Y	Y	N/A	Y	Y
154	07	MS-49-4	0	STEAM GEN 34 SAFETY RELIEF VLV	AB	77'-0"	77'-0"	N	ABS	CRS	Y	Y	N/A	Y	Y
155	07	PCV-1042	0	HYDROGEN SUPPLY PRESSURE CONTROL VLV	PA	55'-0"	55'-0"	Y	ABS	CRS	Y	Y	N/A	N	N
156	07	PCV-1139	0	AUX FWP TURB STM SUPP PRESS REDUCING VLV	AB	15'-0"	15'-0"	Y	ABS	CRS	Y	Y	N/A	Y	Y
157	07	PCV-1142	0	INSTRUMENT AIR EMERGENCY MAKEUP VLV	CB	15'-0"	15'-0"	Y	ABS	CRS	Y	Y	N/A	Y	Y
158	07	PCV-1187	0	CITY WATER SUPPLY ISO VLV	AB	18'-6"	18'-6"	Y	ABS	CRS	Y	Y	N/A	Y	Y
159	07	PCV-1188	0	CITY WATER SUPPLY ISO VLV	AB	18'-6"	18'-6"	Y	ABS	CRS	Y	Y	N/A	Y	Y
160	07	PCV-1189	0	CITY WATER SUPPLY ISO VLV	AB	18'-6"	18'-6"	Y	ABS	CRS	Y	Y	N/A	Y	Y
161	07	PCV-1213	0	PRESSURE CONTROL VLV	AB	18'-6"	18'-6"	Y	ABS	CRS	Y	Y	N/A	Y	Y
162	07	PCV-1228	0	I/A SPPLY CONT BLDG INSTR AIR HDR	PP	41'-0"	41'-0"	Y	ABS	CRS	Y	Y	N/A	Y	Y
163	07	PCV-1273	0	N2 BACKUP SUPPLY	AB	18'-6"	18'-6"	Y	ABS	CRS	Y	Y	N/A	Y	Y
164	07	PCV-1274	0	N2 BACKUP SUPPLY	AB	18'-6"	18'-6"	Y	ABS	CRS	Y	Y	N/A	Y	Y
165	07	PCV-1275	0	N2 BACKUP SUPPLY	AB	18'-6"	18'-6"	Y	ABS	CRS	Y	Y	N/A	Y	Y
166	07	PCV-1276	0	N2 BACKUP SUPPLY	AB	18'-6"	18'-6"	Y	ABS	CRS	Y	Y	N/A	Y	Y
167	07	PCV-1296	0	31 A/C UNIT CONDENSER	CB	15'-0"	15'-0"	Y	ABS	CRS	Y	Y	N/A	Y	Y
168	07	PCV-1297	0	32 A/C UNIT CONDENSER	CB	15'-0"	15'-0"	Y	ABS	CRS	Y	Y	N/A	Y	Y
169	07	PCV-1310A	0	AUX FWP TURB STM SUPP SHUT-OFF VLV	AB	43'-0"	43'-0"	Y	ABS	CRS	Y	Y	N/A	Y	Y
170	07	PCV-1310B	0	AUX FWP TURB STM SUPP SHUT-OFF VLV	AB	36'-0"	36'-0"	Y	ABS	CRS	Y	Y	N/A	Y	Y
171	07	PCV-455A	0	PZR SPRAY CONTROL VLV	VC	68'-0"	68'-0"	N	ABS	CRS	Y	Y	N/A	Y	Y
172	07	PCV-455B	0	PZR SPRAY CONTROL VLV	VC	68'-0"	68'-0"	N	ABS	CRS	Y	Y	N/A	Y	Y
173	07	PCV-455C	0	PRESSURIZER PORV	VC	124'-0	124'-0	N	ABS	CRS	Y	Y	N/A	Y	Y
174	07	PCV-456	0	PRESSURIZER PORV	VC	124'-0	124'-0	N	ABS	CRS	Y	Y	N/A	Y	Y
175	07	PCV-473	0	N2 SUPPLY TO PRT	PA	41'-0"	41'-0"	Y	ABS	CRS	Y	Y	N/A	Y	Y
176	07	PRV-6300	0	N2 TO PORV 456 REG VLV	VC	68'-0"	68'-0"	N	ABS	CRS	Y	Y	N/A	Y	Y
177	07	PRV-6301	0	N2 TO PORV 455C REG VLV	VC	68'-0"	68'-0"	N	ABS	CRS	Y	Y	N/A	Y	Y
178	07	RC-519	0	PRIMARY WATER MAKE-UP TO PRT VLV	PP	41'-0"	41'-0"	Y	ABS	CRS	Y	Y	N/A	Y	Y
179	07	RC-523	0	PRT DRAIN VLV	VC	46'-0"	46'-0"	Y	ABS	CRS	Y	Y	N/A	Y	Y
180	07	RC-544	0	REACTOR VESSEL FLANGE LEAK-OFF CTRL VLV	VC	60'-0"	60'-0"	Y	ABS	CRS	Y	Y	N/A	Y	Y
181	07	RC-549	0	PRESS RELIEF GAS ANALYZER CTRL VLV	PA	54'-0"	54'-0"	Y	ABS	CRS	Y	Y	N/A	Y	Y
182	07	RC-552	0	PRIMARY WATER MAKE-UP TO PRT VLV	PP	41'-0"	41'-0"	Y	ABS	CRS	Y	Y	N/A	Y	Y
183	07	RC-560	0	PRT SPRAY ISO STOP VLV	VC	46'-0"	46'-0"	Y	ABS	CRS	Y	Y	N/A	Y	Y
184	07	SWN-TCV-1103	0	CFCU OUTLET CONTROL VLV	PP	35'-0"	35'-0"	Y	ABS	CRS	Y	Y	N/A	Y	Y
185	07	SWN-TCV-1104	0	CFCU OUTLET BYPASS VLV	PP	35'-0"	35'-0"	Y	ABS	CRS	Y	Y	N/A	Y	Y

INDIAN POINT NUCLEAR GENERATING STATION UNIT 3
SCREENING VERIFICATION DATA SHEET (SVDS)

Line	Eq. Cl	Eq. ID	Rev No	Equipment Description	Bldg.	Fl. El.	Base El.	<40'?	Cap Spec.	Demd. Spec.	Cap > Demd?	Caveats OK?	Anchor OK?	Interact OK?	Equip OK?
186	07	SWN-TCV-1105	0	CFCU OUTLET BYPASS VLV	PP	35'-0"	35'-0"	Y	ABS	CRS	Y	Y	N/A	Y	Y
187	07	SWN-TCV-1113	0	INST AIR CC HX SW OUTLET TCV	CB	15'-0"	15'-0"	Y	ABS	CRS	Y	Y	N/A	Y	Y
188	07	TCV-130	0	NON REGEN HX OUTLET TCV	PA	73'-0"	73'-0"	N	ABS	CRS	Y	Y	N/A	Y	Y
189	08A	AC-FCV-625	0	CCW RET FR RCP MTR COOLERS	PP	51'-0"	51'-0"	Y	ABS	CRS	Y	Y*	N/A	Y	Y*
190	08A	AC-MOV-0743	0	RHR PUMP MINI FLOW TEST LINE	PP	51'-0"	51'-0"	Y	ABS	CRS	Y	Y*	N/A	Y	Y*
191	08A	AC-MOV-0744	0	RHR PUMP DISCH ISO VLV	PA	15'-0"	15'-0"	Y	ABS	CRS	Y	Y*	N/A	Y	Y*
192	08A	AC-MOV-0745A	0	RHR HEAT EXCHANGER 32 INLET ISOLATION VLV	VC	66'-0"	66'-0"	N	ABS	CRS	Y	Y*	N/A	Y	Y*
193	08A	AC-MOV-0745B	0	RHR HEAT EXCHANGER 32 INLET ISOLATION VLV	VC	66'-0"	66'-0"	N	ABS	CRS	Y	Y	N/A	Y	Y
194	08A	AC-MOV-0746	0	#32 RHR HX OUTLT ISO STOP VLV	VC	68'-0"	68'-0"	N	ABS	CRS	Y	Y*	N/A	Y	Y*
195	08A	AC-MOV-0747	0	#31 RHR HX OUTLT ISO STOP VLV	VC	68'-0"	68'-0"	N	ABS	CRS	Y	Y*	N/A	Y	Y*
196	08A	AC-MOV-1870	0	RHR PUMP MINI FLOW TEST LINE VLV	PP	41'-0"	41'-0"	Y	ABS	CRS	Y	Y*	N/A	Y	Y*
197	08A	AC-MOV-730	0	RHR SUCT LN ISO VLV	VC	56'-6"	56'-6"	Y	ABS	CRS	Y	Y	N/A	Y	Y
198	08A	AC-MOV-731	0	RHR SUCT LN ISO VLV	VC	59'-6"	59'-6"	Y	ABS	CRS	Y	Y	N/A	Y	Y
199	08A	AC-MOV-769	0	CCW SUPP-RCP ISO	PA	55'-7"	55'-7"	Y	ABS	CRS	Y	Y*	N/A	Y	Y*
200	08A	AC-MOV-784	0	CCW RET FR RCP ISO VLV	PP	51'-0"	51'-0"	Y	ABS	CRS	Y	Y*	N/A	Y	Y*
201	08A	AC-MOV-786	0	CCW RET FR RCP ISO VLV	PP	51'-0"	51'-0"	Y	ABS	CRS	Y	Y*	N/A	Y	Y*
202	08A	AC-MOV-789	0	CCW RET FR RCP ISO VLV	PP	51'-0"	51'-0"	Y	ABS	CRS	Y	Y*	N/A	Y	Y*
203	08A	AC-MOV-797	0	CCW SUPP-RCP ISO VLV	PP	51'-0"	51'-0"	Y	ABS	CRS	Y	Y*	N/A	Y	Y*
204	08A	AC-MOV-822A	0	RHR HTX ISO. VLV	PP	41'-0"	41'-0"	Y	ABS	CRS	Y	Y*	N/A	Y	Y*
205	08A	AC-MOV-822B	0	RHR HTX ISO. VLV	PP	41'-0"	41'-0"	Y	ABS	CRS	Y	Y*	N/A	Y	Y*
206	08A	CH-LCV-112B	0	RWST TO CHARGING PUMP SUCTION VLV	PA	65'-0"	65'-0"	N	ABS	CRS	Y	Y*	N/A	Y	Y*
207	08A	CH-LCV-112C	0	VCT OUTLET ISO VLV	PA	73'-0"	73'-0"	N	ABS	CRS	Y	Y*	N/A	Y	Y*
208	08A	CH-MOV-205	0	CHARGING FLOW TO RCS ISO VLV	PP	41'-0"	41'-0"	Y	ABS	CRS	Y	Y*	N/A	Y	Y*
209	08A	CH-MOV-222	0	RCP SEAL WTR RETURN ISO VLV	PP	41'-0"	41'-0"	Y	ABS	CRS	Y	Y*	N/A	Y	Y*
210	08A	CH-MOV-226	0	CHARGING LINE CTMT ISO VLV	PP	41'-0"	41'-0"	Y	ABS	CRS	Y	Y*	N/A	Y	Y*
211	08A	CH-MOV-250A	0	31 RCP SEAL INJ CTMT ISO VLV	PP	41'-0"	41'-0"	Y	ABS	CRS	Y	Y*	N/A	Y	Y*
212	08A	CH-MOV-250B	0	32 RCP SEAL INJ CTMT ISO VLV	PP	41'-0"	41'-0"	Y	ABS	CRS	Y	Y*	N/A	Y	Y*
213	08A	CH-MOV-250C	0	33 RCP SEAL INJ CTMT ISO VLV	PP	41'-0"	41'-0"	Y	ABS	CRS	Y	Y*	N/A	Y	Y*
214	08A	CH-MOV-250D	0	34 RCP SEAL INJ CTMT ISO VLV	PP	41'-0"	41'-0"	Y	ABS	CRS	Y	Y*	N/A	Y	Y*
215	08A	CH-MOV-333	0	BORIC ACID FEED TO CHG PUMPS VLV	PA	73'-0"	73'-0"	N	ABS	CRS	Y	Y*	N/A	Y	Y*
216	08A	CH-MOV-441	0	31 RCP SEAL INJ CTMT ISO VLV	PP	41'-0"	41'-0"	Y	ABS	CRS	Y	Y*	N/A	Y	Y*
217	08A	CH-MOV-442	0	32 RCP SEAL INJ CTMT ISO VLV	PP	41'-0"	41'-0"	Y	ABS	CRS	Y	Y*	N/A	Y	Y*
218	08A	CH-MOV-443	0	33 RCP SEAL INJ CTMT ISO VLV	PP	41'-0"	41'-0"	Y	ABS	CRS	Y	Y*	N/A	Y	Y*
219	08A	CH-MOV-444	0	34 RCP SEAL INJ CTMT ISO VLV	PP	41'-0"	41'-0"	Y	ABS	CRS	Y	Y*	N/A	Y	Y*
220	08A	RC-MOV-535	0	PORV BLK VLV 455C	VC	124'-0	124'-0	N	ABS	CRS	Y	Y	N/A	Y	Y
221	08A	RC-MOV-536	0	PORV BLK VLV 456	VC	124'-0	124'-0	N	ABS	CRS	Y	Y*	N/A	Y	Y*
222	08A	SI-HCV-638	0	RHR HTX 31 DISCH. THROTTLE VLV.	VC	66'-0"	66'-0"	N	ABS	CRS	Y	Y*	N/A	Y	Y*

INDIAN POINT NUCLEAR GENERATING STATION UNIT 3
SCREENING VERIFICATION DATA SHEET (SVDS)

Line	Eq. Cl	Eq. ID	Rev No	Equipment Description	Bldg.	Fl. El.	Base El.	<40'?	Cap Spec.	Demd. Spec.	Cap > Demd?	Caveats OK?	Anchor OK?	Interact OK?	Equip OK?
223	08A	SI-HCV-640	0	RHR HTX 32 DISCH. THROTTLE VLV.	VC	66'-0"	66'-0"	N	ABS	CRS	Y	Y*	N/A	Y	Y*
224	08A	SI-MOV-0882	0	RWST SUPPLY TO RHR PUMPS	PA	34'-0"	34'-0"	Y	ABS	CRS	Y	Y*	N/A	Y	Y*
225	08A	SI-MOV-0885A	0	RHR PUMPS SUCTION FROM CTMT SUMP	PA	34'-0"	34'-0"	Y	ABS	CRS	Y	Y*	N/A	Y	Y*
226	08A	SI-MOV-0885B	0	RHR PUMPS SUCTION FROM CTMT SUMP	PA	34'-0"	34'-0"	Y	ABS	CRS	Y	Y*	N/A	Y	Y*
227	08A	SI-MOV-0888A	0	HIGH HEAD INJECTION RECIRC STOP	PA	51'-0"	51'-0"	Y	ABS	CRS	Y	Y*	N/A	Y	Y*
228	08A	SI-MOV-0888B	0	HIGH HEAD INJECTION RECIRC STOP	PA	51'-0"	51'-0"	Y	ABS	CRS	Y	Y*	N/A	Y	Y*
229	08A	SI-MOV-0889A	0	CTMT SPRAY HEADER ISO VLV	VC	72'-6"	72'-6"	N	ABS	CRS	Y	Y	N/A	Y	Y
230	08A	SI-MOV-0889B	0	CTMT SPRAY HEADER ISO VLV	VC	72'-6"	72'-6"	N	ABS	CRS	Y	Y	N/A	Y	Y
231	08A	SI-MOV-0894A	0	NO. 31 ACCUM ISOLATION VLV	VC	46'-0"	46'-0"	Y	ABS	CRS	Y	Y	N/A	Y	Y
232	08A	SI-MOV-0894B	0	NO. 32 ACCUM ISOLATION VLV	VC	46'-0"	46'-0"	Y	ABS	CRS	Y	Y	N/A	Y	Y
233	08A	SI-MOV-0894C	0	NO. 33 ACCUM ISOLATION VLV	VC	46'-0"	46'-0"	Y	ABS	CRS	Y	Y	N/A	Y	Y
234	08A	SI-MOV-0894D	0	NO. 34 ACCUM ISOLATION VLV	VC	46'-0"	46'-0"	Y	ABS	CRS	Y	Y	N/A	Y	Y
235	08A	SI-MOV-0899A	0	RHR HTX 32 OUTLET STOP	VC	68'-0"	68'-0"	N	ABS	CRS	Y	Y*	N/A	Y	Y*
236	08A	SI-MOV-0899B	0	RHR HTX 31 OUTLET STOP	VC	68'-0"	68'-0"	N	ABS	CRS	Y	Y*	N/A	Y	Y*
237	08A	SI-MOV-1802A	0	SIS RECIRCP DISCHARGE VLV	VC	46'-0"	46'-0"	Y	ABS	CRS	Y	Y	N/A	Y	Y
238	08A	SI-MOV-1802B	0	SIS RECIRCP DISCHARGE VLV	VC	46'-0"	46'-0"	Y	ABS	CRS	Y	Y	N/A	Y	Y
239	08A	SI-MOV-1810	0	MOV RWST TO SI PUMP ISO VLV	PA	34'-0"	34'-0"	Y	ABS	CRS	Y	Y*	N/A	Y	Y*
240	08A	SI-MOV-1869A	0	RHR HX 32 TO RHR MINI FLOW VLVS	VC	55'-0"	55'-0"	Y	ABS	CRS	Y	Y	N/A	Y	Y
241	08A	SI-MOV-1869B	0	RHR HX 31 TO RHR MINI FLOW VLVS	VC	55'-0"	55'-0"	Y	ABS	CRS	Y	Y	N/A	Y	Y
242	08B	CH-SOV-265	0	VCT GAS ANALYZER SAMPLE VLV	PA	73'-0"	73'-0"	N	ABS	CRS	Y	Y	N/A	Y	Y
243	08B	CH-SOV-268	0	VCT VENT ISO VLV	PA	73'-0"	73'-0"	N	ABS	CRS	Y	Y	N/A	Y	Y
244	08B	SOV-110B-1	0	CH-FCV-110B SOLENOID VALVE	PA	73'-0"	73'-0"	Y	ABS	CRS	Y	Y	N/A	Y	Y
245	08B	SOV-112A-1	0	CH-LCV-112A SOLENOID VLV	PA	80'-0"	80'-0"	N	ABS	CRS	Y	Y	N/A	Y	Y
246	08B	SOV-1139-1	0	PCV-1139 SOLENOID VALVE	AB	15'-0"	15'-0"	Y	ABS	CRS	Y	Y	N/A	Y	Y
247	08B	SOV-1139-2	0	PCV-1139 SOLENOID VALVE	AB	15'-0"	15'-0"	Y	ABS	CRS	Y	Y	N/A	Y	Y
248	08B	SOV-149-1	0	CH-TCV-149 SOLENOID VALVE	PA	80'0"	80'-0"	Y	ABS	CRS	Y	Y	N/A	Y	Y
249	08B	SOV-200A-1	0	CH-AOV-200A SOLENOID VLV	VC	46'-0"	46'-0"	Y	ABS	CRS	Y	Y	N/A	Y	Y
250	08B	SOV-200B-1	0	CH-AOV-200B SOLENOID VLV	VC	46'-0"	46'-0"	Y	ABS	CRS	Y	Y	N/A	Y	Y
251	08B	SOV-200C-1	0	CH-AOV-200C SOLENOID VLV	VC	46'-0"	46'-0"	Y	ABS	CRS	Y	Y	N/A	Y	Y
252	08B	SOV-215-1	0	CH-AOV-215 SOLENOID VALVE	VC	46'-0"	46'-0"	Y	ABS	CRS	Y	Y	N/A	Y	Y
253	08B	SOV-459-1	0	LETDOWN STOP VALVE	VC	79'-0"	79'-0"	Y	ABS	CRS	Y	Y	N/A	Y	Y
254	08B	SOV-460-1	0	CH-LCV-460 SOLENOID VLV	VC	79'-0"	79'-0"	N	ABS	CRS	Y	Y	N/A	Y	Y
255	08B	SOV-544-1	0	RC-544 SOLENOID VALVE	VC	60'-0"	60'-0"	Y	ABS	CRS	Y	Y	N/A	Y	Y
256	08B	SOV-552-1	0	RC-552 SOLENOID VALVE	PP	41'-0"	41'-0"	Y	ABS	CRS	Y	Y	N/A	Y	Y
257	08B	SOV-560-1	0	RC-560 SOLENOID VLV	VC	46'-0"	46'-0"	Y	ABS	CRS	Y	Y	N/A	Y	Y
258	08B	SOV-793-1	0	AC-793 SOLENOID VLV	PP	51'-0"	51'-0"	Y	ABS	CRS	Y	Y	N/A	Y	Y
259	08B	SOV-956C-1	0	956C SOLENOID VALVE	PP	41'-0"	41'-0"	Y	ABS	CRS	Y	Y	N/A	Y	Y

INDIAN POINT NUCLEAR GENERATING STATION UNIT 3
SCREENING VERIFICATION DATA SHEET (SVDS)

Line	Eq. Cl	Eq. ID	Rev No	Equipment Description	Bldg.	Fl. El.	Base El.	<40'?	Cap Spec.	Demd. Spec.	Cap > Demd?	Caveats OK?	Anchor OK?	Interact OK?	Equip OK?
260	08B	SOV-956D-1	0	956D SOLENOID VALVE	PP	41'-0"	41'-0"	Y	ABS	CRS	Y	Y	N/A	Y	Y
261	08B	SOV-956E-1	0	956E SOLENOID VALVE	PP	41'-0"	41'-0"	Y	ABS	CRS	Y	Y	N/A	Y	Y
262	08B	SOV-956F-1	0	956F SOLENOID VALVE	PP	41'-0"	41'-0"	Y	ABS	CRS	Y	Y	N/A	Y	Y
263	09	0031ETEF	0	EL TNL EXHAUST FAN 31 (LOWER)	ET	34'-0"	34'-0"	Y	ABS	CRS	Y	Y	Y	Y	Y
264	09	0032ETEF	0	EL TNL EXHAUST FAN 32 (LOWER)	ET	34'-0"	34'-0"	Y	ABS	CRS	Y	Y	Y	Y	Y
265	09	0033ETEF	0	EL TNL EXHAUST FAN 33 (UPPER)	ET	46'-0"	46'-0"	Y	ABS	CRS	Y	Y	Y	Y	Y
266	09	0034ETEF	0	EL TNL EXHAUST FAN 34 (UPPER)	ET	46'-0"	46'-0"	Y	ABS	CRS	Y	Y	Y	Y	Y
267	09	31 PABEF	0	PRIMARY AUX BUILDING EXHAUST FAN	FB	72'-0"	72'-0"	N	ABS	CRS	Y	Y	Y	Y	Y
268	09	31CRDF	0	CRD COOLING FAN	VC	98'-0"	98'-0"	N	ABS	CRS	Y	Y	Y	Y	Y
269	09	32 PABEF	0	PRIMARY AUX BUILDING SUPPLY FAN	FB	72'-0"	72'-0"	N	ABS	CRS	Y	Y	Y	Y	Y
270	09	32CRDF	0	CRD COOLING FAN	VC	98'-0"	98'-0"	N	ABS	CRS	Y	Y	Y	Y	Y
271	09	33CRDF	0	CRD COOLING FAN	VC	98'-0"	98'-0"	N	ABS	CRS	Y	Y	Y	Y	Y
272	09	34CRDF	0	CRD COOLING FAN	VC	98'-0"	98'-0"	N	ABS	CRS	Y	Y	Y	Y	Y
273	09	F-311	0	AFPB EXH FAN/DAMPER	AB	18'-6"	18'-6"	Y	ABS	CRS	Y	Y	Y	Y	Y
274	09	F-312	0	AFPB EXH FAN/DAMPER	AB	18'-6"	18'-6"	Y	ABS	CRS	Y	Y	Y	Y	Y
275	09	F-313	0	AFPB EXH FAN/DAMPER	AB	32'-6"	32'-6"	Y	ABS	CRS	Y	Y	Y	Y	Y
276	09	F-314	0	EDG 31 CMPT EF 314	DG	44'-0"	44'-0"	Y	ABS	CRS	Y	Y	Y	Y	Y
277	09	F-315	0	EDG 31 CMPT EF 315	DG	44'-0"	44'-0"	Y	ABS	CRS	Y	Y	Y	Y	Y
278	09	F-316	0	EDG 32 CMPT EF 316	DG	44'-0"	44'-0"	Y	ABS	CRS	Y	Y	Y	Y	Y
279	09	F-317	0	EDG 32 CMPT EF 317	DG	44'-0"	44'-0"	Y	ABS	CRS	Y	Y	Y	Y	Y
280	09	F-318	0	EDG 33 CMPT EF 318	DG	44'-0"	44'-0"	Y	ABS	CRS	Y	Y	Y	Y	Y
281	09	F-319	0	EDG 33 CMPT EF 319	DG	44'-0"	44'-0"	Y	ABS	CRS	Y	Y	Y	Y	Y
282	09	PABSF	0	PRIMARY AUX BUILDING SUPPLY FAN	PA	41'-0"	41'-0"	Y	ABS	CRS	Y	Y	Y	Y	Y
283	10	0031CRFU	0	31 CTMT RECIRC FAN UNIT	VC	68'-0"	68'-0"	N	ABS	CRS	Y	Y	Y	Y	Y
284	10	0032CRFU	0	32 CTMT RECIRC FAN UNIT	VC	68'-0"	68'-0"	N	ABS	CRS	Y	Y	Y	Y	Y
285	10	0033CRFU	0	33 CTMT RECIRC FAN UNIT	VC	68'-0"	68'-0"	N	ABS	CRS	Y	Y	Y	Y	Y
286	10	0034CRFU	0	34 CTMT RECIRC FAN UNIT	VC	68'-0"	68'-0"	N	ABS	CRS	Y	Y	Y	Y	Y
287	10	0035CRFU	0	35 CTMT RECIRC FAN UNIT	VC	68'-0"	68'-0"	N	ABS	CRS	Y	Y	Y	Y	Y
288	10	ACU31	0	CONTROL ROOM A/C UNIT 31	CB	15'-0"	15'-0"	Y	ABS	CRS	Y	Y	Y	Y	Y
289	10	ACU32	0	CONTROL ROOM A/C UNIT 32	CB	15'-0"	15'-0"	Y	ABS	CRS	Y	Y	Y	Y	Y
290	12	0031 IAC	0	INST AIR COMP 31	CB	15'-0"	15'-0"	Y	ABS	CRS	Y	Y	Y	Y	Y
291	12	0032 IAC	0	INST AIR COMP 32	CB	15'-0"	15'-0"	Y	ABS	CRS	Y	Y	Y	Y	Y
292	14	BK-UP GR 31 DIST PNL	0	PRESSURIZER HEATER CONTROL PANEL 31	ET	34'-0"	34'-0"	Y	ABS	CRS	Y	Y	Y	Y	Y
293	14	BK-UP GR 32 DIST PNL	0	PRESSURIZER HEATER CONTROL PANEL 32	ET	34'-0"	34'-0"	Y	ABS	CRS	Y	Y	Y	Y	Y
294	14	BK-UP GR 33 DIST PNL	0	PRESSURIZER HEATER CONTROL PANEL 33	ET	34'-0"	34'-0"	Y	ABS	CRS	Y	Y	Y	Y	Y
295	14	CBBATT33	0	400A BATTERY 33 CIRCUIT BREAKER	CB	33'-0"	33'-0"	Y	ABS	CRS	Y	Y	Y	Y	Y
296	14	K50	0	118 VAC INST BUS 31A	CB	53'-0"	53'-0"	Y	ABS	CRS	Y	Y	Y	Y	Y

INDIAN POINT NUCLEAR GENERATING STATION UNIT 3
SCREENING VERIFICATION DATA SHEET (SVDS)

Line	Eq. Cl	Eq. ID	Rev No	Equipment Description	Bldg.	Fl. El.	Base El.	<40'?	Cap Spec.	Demd. Spec.	Cap > Demd?	Caveats OK?	Anchor OK?	Interact OK?	Equip OK?
297	14	K51	0	118 VAC INST BUS 32A	CB	53'-0"	53'-0"	Y	ABS	CRS	Y	Y	Y	Y	Y
298	14	PE6	0	118 VAC INSTR BUS 34	CB	53'-0"	53'-0"	Y	ABS	CRS	Y	Y	Y	Y	Y
299	14	PE7	0	118 VAC INSTR BUS 33	CB	53'-0"	53'-0"	Y	ABS	CRS	Y	Y	Y	Y	Y
300	14	PE8	0	118 VAC INST BUS 31	CB	53'-0"	53'-0"	Y	ABS	CRS	Y	Y	Y	Y	Y
301	14	PE9	0	118 VAC INST BUS 32	CB	53'-0"	53'-0"	Y	ABS	CRS	Y	Y	Y	Y	Y
302	14	PNL K48	0	125 VDC DISTRIBUTION PNL 31A	CB	53'-0"	53'-0"	Y	ABS	CRS	Y	Y	Y	Y	Y
303	14	PNL K49	0	125 VDC DISTRIBUTION PNL 32A	CB	53'-0"	53'-0"	Y	ABS	CRS	Y	Y	Y	Y	Y
304	14	PNL PC1	0	125 VDC POWER PANEL #31	CB	33'-0"	33'-0"	Y	ABS	CRS	Y	Y	Y	Y	Y
305	14	PNL PC2	0	125 VDC POWER PANEL #32	CB	33'-0"	33'-0"	Y	ABS	CRS	Y	Y	Y	Y	Y
306	14	PNL PC3	0	125 VDC DISTRIBUTION PNL 31	CB	53'-0"	53'-0"	Y	ABS	CRS	Y	Y	Y	Y	Y
307	14	PNL PC4	0	125 VDC DISTRIBUTION PNL 32	CB	53'-0"	53'-0"	Y	ABS	CRS	Y	Y	Y	Y	Y
308	14	PNL PC8	0	125 VDC DISTRIBUTION PNL 33	CB	53'-0"	53'-0"	Y	ABS	CRS	Y	Y	Y	Y	Y
309	14	PNL PC9	0	125 VDC POWER PANEL #33	CB	15'-0"	15'-0"	Y	ABS	CRS	Y	Y	Y	Y	Y
310	14	PNL PD9	0	125 VDC DISTRIBUTION PNL 34	CB	53'-0"	53'-0"	Y	ABS	CRS	Y	Y	Y	Y	Y
311	14	PNL PF7	0	125 VDC POWER PANEL #34	CB	33'-0"	33'-0"	Y	ABS	CRS	Y	Y	Y	Y	Y
312	15	BATTERY 31	0	BATTERY BANK 31	CB	33'-0"	33'-0"	Y	ABS	CRS	Y	Y	Y	Y	Y
313	15	BATTERY 32	0	BATTERY BANK 32	CB	33'-0"	33'-0"	Y	ABS	CRS	Y	Y	Y	Y	Y
314	15	BATTERY 33	0	BATTERY BANK 33	DG	15'-0"	15'-0"	Y	ABS	CRS	Y	N	Y	Y	N
315	15	BATTERY 34	0	BATTERY BANK 34	CB	33'-0"	33'-0"	Y	ABS	CRS	Y	N	Y	Y	N
316	16	31CHGR	0	BATTERY CHARGER 31	CB	33'-0"	33'-0"	Y	ABS	CRS	Y	Y	Y	Y	Y
317	16	32CHGR	0	BATTERY CHARGER 32	CB	33'-0"	33'-0"	Y	ABS	CRS	Y	Y	Y	Y	Y
318	16	33CHGR	0	BATTERY CHARGER 33	CB	15'-0"	15'-0"	Y	ABS	CRS	Y	Y	Y	Y	Y
319	16	34CHGR	0	BATTERY CHARGER 34	CB	33'-0"	33'-0"	Y	ABS	CRS	Y	N	N	Y	N
320	16	B1G	0	INST BUS 33,33A MANUAL BY-PASS SWITCH	CB	33'-0"	33'-0"	Y	ABS	CRS	Y	Y	Y	Y	Y
321	16	BI3	0	STATIC INVERTER #31 FUSE BOX	CB	33'-0"	33'-0"	Y	ABS	CRS	Y	Y	Y	Y	Y
322	16	BI4	0	STATIC INVERTER #32 FUSE BOX	CB	33'-0"	33'-0"	Y	ABS	CRS	Y	Y	Y	Y	Y
323	16	EGA1	0	25 KVA STATIC INVERTER #31	CB	33'-0"	33'-0"	Y	ABS	CRS	Y	Y	Y	Y	Y
324	16	EGA2	0	25 KVA STATIC INVERTER #32	CB	33'-0"	33'-0"	Y	ABS	CRS	Y	Y	Y	Y	Y
325	16	GC9	0	25 KVA STATIC INVERTER #33	CB	33'-0"	33'-0"	Y	ABS	CRS	Y	Y	Y	Y	Y
326	16	GF2	0	25 KVA STATIC INVERTER #34	CB	33'-0"	33'-0"	Y	ABS	CRS	Y	Y	Y	Y	Y
327	16	K4C	0	STATIC INVERTER #33 FUSE BOX	CB	33'-0"	33'-0"	Y	ABS	CRS	Y	Y	Y	Y	Y
328	16	K4F	0	INST BUS 31,31A MANUAL BY-PASS SWITCH	CB	33'-0"	33'-0"	Y	ABS	CRS	Y	Y	Y	Y	Y
329	16	K4G	0	INST BUS 32,32A MANUAL BY-PASS SWITCH	CB	33'-0"	33'-0"	Y	ABS	CRS	Y	Y	Y	Y	Y
330	16	KG7	0	MANUAL TRANSFER SWITCH #34	CB	33'-0"	33'-0"	Y	ABS	CRS	Y	Y	Y	Y	Y
331	17	DG-31	0	DIESEL GEN NO. 31	DG	15'-0"	15'-0"	Y	ABS	CRS	Y	Y	Y	Y	Y
332	17	DG-32	0	DIESEL GEN NO. 32	DG	15'-0"	15'-0"	Y	ABS	CRS	Y	Y	Y	Y	Y
333	17	DG-33	0	DIESEL GEN NO. 33	DG	15'-0"	15'-0"	Y	ABS	CRS	Y	Y	Y	Y	Y

INDIAN POINT NUCLEAR GENERATING STATION UNIT 3
SCREENING VERIFICATION DATA SHEET (SVDS)

Line	Eq. Cl	Eq. ID	Rev No	Equipment Description	Bldg.	Fl. El.	Base El.	<40'?	Cap Spec.	Demd. Spec.	Cap > Demd?	Caveats OK?	Anchor OK?	Interact OK?	Equip OK?
334	18	FE1	0	PREAMPLIFIER FOR NE-31	VC	68'-0"	68'-0"	N	ABS	CRS	Y	Y	Y	Y	Y
335	18	FE2	0	PREAMPLIFIER FOR NE-32	VC	68'-0"	68'-0"	N	ABS	CRS	Y	Y	Y	Y	Y
336	18	FIT-111	0	PRM WTR FLOW IN0Z XMTR	PA	73'-0"	73'-0"	N	ABS	CRS	Y	Y	Y	Y	Y
337	18	FIT-156A	0	RCP 34 SEAL LEAKOFF FLOW XMTR	VC	46'-0"	46'-0"	Y	ABS	CRS	Y	Y	Y	Y	Y
338	18	FIT-156B	0	RCP 34 SEAL LEAKOFF FLOW XMTR	VC	46'-0"	46'-0"	Y	ABS	CRS	Y	Y	Y	Y	Y
339	18	FIT-157A	0	RCP 33 SEAL LEAKOFF FLOW XMTR	VC	46'-0"	46'-0"	Y	ABS	CRS	Y	Y	Y	Y	Y
340	18	FIT-157B	0	RCP 33 SEAL LEAKOFF FLOW XMTR	VC	46'-0"	46'-0"	Y	ABS	CRS	Y	Y	Y	Y	Y
341	18	FIT-158A	0	RCP 32 SEAL LEAKOFF FLOW XMTR	VC	46'-0"	46'-0"	Y	ABS	CRS	Y	Y	Y	Y	Y
342	18	FIT-158B	0	RCP 32 SEAL LEAKOFF FLOW XMTR	VC	46'-0"	46'-0"	Y	ABS	CRS	Y	Y	Y	Y	Y
343	18	FIT-159A	0	RCP 31 SEAL LEAKOFF FLOW XMTR	VC	46'-0"	46'-0"	Y	ABS	CRS	Y	Y	Y	Y	Y
344	18	FIT-159B	0	RCP 31 SEAL LEAKOFF FLOW XMTR	VC	46'-0"	46'-0"	Y	ABS	CRS	Y	Y	Y	Y	Y
345	18	FT-128	0	CHG FLOW TO REG HX XMTR	PP	41'-0"	41'-0"	Y	ABS	CRS	Y	Y	Y	Y	Y
346	18	FT-134	0	LETDWN FLOW XMTR	PA	75'-0"	75'-0"	N	ABS	CRS	Y	Y	Y	Y	Y
347	18	FT-601A	0	CCW HTX OUTLET FLOW	PA	41'-0"	41'-0"	Y	ABS	CRS	Y	Y	Y	Y	Y
348	18	FT-601B	0	CCW HTX OUTLET FLOW	PA	41'-0"	41'-0"	Y	ABS	CRS	Y	Y	Y	Y	Y
349	18	FT-638	0	RHR FLOW XMTR	VC	68'-0"	68'-0"	N	ABS	CRS	Y	Y	Y	Y	Y
350	18	FT-640	0	RHR FLOW XMTR	VC	68'-0"	68'-0"	N	ABS	CRS	Y	Y	Y	Y	Y
351	18	FT-946A	0	RHR TO RCS 34 COLD LEG FLOW XMTR	VC	68'-0"	68'-0"	N	ABS	CRS	Y	Y	Y	Y	Y
352	18	FT-946B	0	RHR TO RCS 33 COLD LEG FLOW XMTR	VC	68'-0"	68'-0"	N	ABS	CRS	Y	Y	Y	Y	Y
353	18	FT-946C	0	RHR TO RCS 32 COLD LEG FLOW XMTR	VC	68'-0"	68'-0"	N	ABS	CRS	Y	Y	Y	Y	Y
354	18	FT-946D	0	RHR TO RCS 31 COLD LEG FLOW XMTR	VC	68'-0"	68'-0"	N	ABS	CRS	Y	Y	Y	Y	Y
355	18	HC-1118A	0	#32 ABFB TURB. SPEED CONTROL I/P CONVERTER	AB	18'-6"	18'-6"	Y	ABS	CRS	Y	Y	Y	Y	Y
356	18	LT-102	0	BORIC ACID STORAGE TANK #32 LEVEL XMTR	PA	73'-0"	73'-0"	N	ABS	CRS	Y	Y	Y	Y	Y
357	18	LT-106	0	BORIC ACID STORAGE TANK #31 LEVEL XMTR	PA	73'-0"	73'-0"	N	ABS	CRS	Y	Y	Y	Y	Y
358	18	LT-112	0	VCT LEVEL XMTR	PA	73'-0"	73'-0"	N	ABS	CRS	Y	Y	Y	Y	Y
359	18	LT-1128	0	CST LEVEL TRANSMITTER	YD	82'-0"	82'-0"	N	ABS	CRS	Y	Y	Y	Y	Y
360	18	LT-1128A	0	CST LEVEL TRANSMITTER	YD	82'-0"	82'-0"	N	ABS	CRS	Y	Y	Y	Y	Y
361	18	LT-1253	0	CMT LEVEL XMTR	VC	46'-0"	46'-0"	Y	ABS	CRS	Y	Y	Y	Y	Y
362	18	LT-1254	0	CMT LEVEL XMTR	VC	46'-0"	46'-0"	Y	ABS	CRS	Y	Y	Y	Y	Y
363	18	LT-470	0	PRT LEVEL XMTR	VC	65'-0"	65'-0"	N	ABS	CRS	Y	Y	Y	Y	Y
364	18	LT-628	0	CCW SURGE TANK #31 LEVEL XMTR	PA	73'-0"	73'-0"	N	ABS	CRS	Y	Y	Y	Y	Y
365	18	LT-629	0	CCW SURGE TANK #32 LEVEL XMTR	PA	73'-0"	73'-0"	N	ABS	CRS	Y	Y	Y	Y	Y
366	18	LT-920	0	RWST LEVEL XMTR	TK	79'-0"	79'-0"	N	ABS	CRS	Y	Y	Y	Y	Y
367	18	PI-1260	0	AFW 31 DISCHG PRESS IND	AB	18'-6"	18'-6"	Y	ABS	CRS	Y	Y	Y	Y	Y
368	18	PI-1261	0	AFW 32 DISCHG PRESS IND	AB	18'-6"	18'-6"	Y	ABS	CRS	Y	Y	Y	Y	Y
369	18	PI-1262	0	AFW 33 DISCHG PRESS IND	AB	18'-6"	18'-6"	Y	ABS	CRS	Y	Y	Y	Y	Y
370	18	PM-405A	0	PRESSURE SIGNAL CONVERTER CONDITIONER 32 AFWP	AB	18'-6"	18'-6"	Y	ABS	CRS	Y	Y	Y	Y	Y

INDIAN POINT NUCLEAR GENERATING STATION UNIT 3
SCREENING VERIFICATION DATA SHEET (SVDS)

Line	Eq. Cl	Eq. ID	Rev No	Equipment Description	Bldg.	Fl. El.	Base El.	<40'?	Cap Spec.	Demd. Spec.	Cap > Demd?	Caveats OK?	Anchor OK?	Interact OK?	Equip OK?
371	18	PM-405B	0	PRESSURE SIGNAL CONVERTER CONDITIONER 32 AFWP	AB	18'-6"	18'-6"	Y	ABS	CRS	Y	Y	Y	Y	Y
372	18	PM-405C	0	PRESSURE SIGNAL CONVERTER CONDITIONER 32 AFWP	AB	18'-6"	18'-6"	Y	ABS	CRS	Y	Y	Y	Y	Y
373	18	PM-405D	0	PRESSURE SIGNAL CONVERTER CONDITIONER 32 AFWP	AB	18'-6"	18'-6"	Y	ABS	CRS	Y	Y	Y	Y	Y
374	18	PM-406E	0	PRESSURE SIGNAL CONVERTER CONDITIONER 33 AFWP	AB	18'-6"	18'-6"	Y	ABS	CRS	Y	Y	Y	Y	Y
375	18	PM-406F	0	PRESSURE SIGNAL CONVERTER CONDITIONER 33 AFWP	AB	18'-6"	18'-6"	Y	ABS	CRS	Y	Y	Y	Y	Y
376	18	PM-406G	0	PRESSURE SIGNAL CONVERTER CONDITIONER 33 AFWP	AB	18'-6"	18'-6"	Y	ABS	CRS	Y	Y	Y	Y	Y
377	18	PM-406H	0	PRESSURE SIGNAL CONVERTER CONDITIONER 33 AFWP	AB	18'-6"	18'-6"	Y	ABS	CRS	Y	Y	Y	Y	Y
378	18	PNL PL6	0	CHARGING PUMPS SPEED CONTROL PANEL	PA	55'-0"	55'-0"	Y	ABS	CRS	Y	Y	Y	Y	Y
379	18	PT-1144	0	STATION AIR NUCL SERV PRESS XMTR	CB	15'-0"	15'-0"	Y	ABS	CRS	Y	Y	Y	Y	Y
380	18	PT-1190	0	SVC WATER NUCL HDR PRESS XMTR	TB	15'-0"	15'-0"	Y	ABS	CRS	Y	Y	Y	Y	Y
381	18	PT-1191	0	SVC WATER NUCL HDR PRESS XMTR	TB	15'-0"	15'-0"	Y	ABS	CRS	Y	Y	N	Y	N
382	18	PT-1192	0	IACC WATER PRESS XMTR	CB	15'-0"	15'-0"	Y	ABS	CRS	Y	Y	Y	Y	Y
383	18	PT-135	0	NON REGEN HX OUTLET LETDOWN PRESS XMTR	PA	73'-0"	73'-0"	N	ABS	CRS	Y	Y	Y	Y	Y
384	18	PT-139	0	VCT PRESSURE XMTR	PA	73'-0"	73'-0"	N	ABS	CRS	Y	Y	Y	Y	Y
385	18	PT-142	0	CHG PP DISCH PRESS XMTR	PA	55'-0"	55'-0"	Y	ABS	CRS	Y	Y	Y	Y	Y
386	18	PT-402	0	LOOP 31 HOT LEG PRESSURE	VC	46'-0"	46'-0"	Y	ABS	CRS	Y	Y	Y	Y	Y
387	18	PT-403	0	LOOP 34 HOT LEG PRESSURE	VC	46'-0"	46'-0"	Y	ABS	CRS	Y	Y	Y	Y	Y
388	18	PT-413	0	LOOP 31 HOT LEG PRESSURE	VC	46'-0"	46'-0"	Y	ABS	CRS	Y	Y	Y	Y	Y
389	18	PT-433	0	LOOP 33 HOT LEG PRESSURE	VC	46'-0"	46'-0"	Y	ABS	CRS	Y	Y	Y	Y	Y
390	18	PT-443	0	LOOP 34 HOT LEG PRESSURE	VC	46'-0"	46'-0"	Y	ABS	CRS	Y	Y	Y	Y	Y
391	18	PT-472	0	PRT PRESSURE XMTR	VC	62'-0"	62'-0"	N	ABS	CRS	Y	Y	Y	Y	Y
392	18	RACK 19	0	INSTRUMENT RACK	VC	68'-0"	68'-0"	N	ABS	CRS	Y	Y	Y	Y	Y
393	18	RACK 20	0	INSTRUMENT RACK	VC	68'-0"	68'-0"	N	ABS	CRS	Y	Y	Y	Y	Y
394	18	RACK 21	0	INSTRUMENT RACK	VC	68'-0"	68'-0"	N	ABS	CRS	Y	Y	Y	Y	Y
395	18	RACK 24A	0	INSTRUMENT RACK	PA	41'-0"	41'-0"	Y	ABS	CRS	Y	Y	Y	N	N
396	18	RACK 26	0	INSTRUMENT RACK	AB	18'-6"	18'-6"	Y	ABS	CRS	Y	Y	Y	Y	Y
397	18	RACK 4-A	0	INSTRUMENT RACK	VC	68'-0"	68'-0"	N	ABS	CRS	Y	Y	Y	Y	Y
398	18	RACK 4-B	0	INSTRUMENT RACK	VC	68'-0"	68'-0"	N	ABS	CRS	Y	Y	Y	Y	Y
399	18	RACK 6A	0	INSTRUMENT RACK	PP	41'-0"	41'-0"	Y	ABS	CRS	Y	Y	Y	N	N
400	18	RACK 8	0	INSTRUMENT RACK	AB	18'-6"	18'-6"	Y	ABS	CRS	Y	Y	Y	Y	Y
401	18	RACK 9	0	INSTRUMENT RACK	AB	18'-6"	18'-6"	Y	ABS	CRS	Y	Y	Y	Y	Y
402	18	RVLIS RACK TRAIN A	0	RVLIS LEVEL XMTR RACK TRAIN A	PP	41'-0"	41'-0"	Y	ABS	CRS	Y	Y	Y	Y	Y
403	18	TC-1113	0	INST AIR CC HX SW OUTLET TC	CB	15'-0"	15'-0"	Y	ABS	CRS	Y	Y	Y	Y	Y
404	19	TE-122	0	EXCESS LETDOWN TEMP ELEMENT	VC	46'-0"	46'-0"	Y	ABS	CRS	Y	Y	Y	Y	Y
405	19	TE-126	0	REGEN HX CHG FLOW TEMP ELEMENT	VC	46'-0"	46'-0"	Y	ABS	CRS	Y	N	N	N	N
406	19	TE-127	0	REGEN HX CHG FLOW TEMP ELEMENT	VC	46'-0"	46'-0"	Y	ABS	CRS	Y	Y	Y	Y	Y
407	19	TE-130	0	NON REGHX OUTLET LETDOWN TEMP ELEMENT	PA	73'-0"	73'-0"	N	ABS	CRS	Y	Y	Y	Y	Y

INDIAN POINT NUCLEAR GENERATING STATION UNIT 3
SCREENING VERIFICATION DATA SHEET (SVDS)

Line	Eq. Cl	Eq. ID	Rev No	Equipment Description	Bldg.	Fl. El.	Base El.	<40'?	Cap Spec.	Demd. Spec.	Cap > Demd?	Caveats OK?	Anchor OK?	Interact OK?	Equip OK?
408	19	TE-1313	0	UPPER TAP COMPENSATION TEMP. ELEMENT	VC	83'-9"	83'-9"	N	ABS	CRS	Y	Y	Y	Y	Y
409	19	TE-1314	0	UPPER TAP COMPENSATION TEMP. ELEMENT	VC	74'-0"	74'-0"	N	ABS	CRS	Y	Y	Y	Y	Y
410	19	TE-1317	0	RVWL CONDUIT COMPENSATION TEMP ELEMENT	VC	40'-0"	40'-0"	Y	ABS	CRS	Y	Y	Y	Y	Y
411	19	TE-1318	0	RVWL CONDUIT COMPENSATION TEMP ELEMENT	VC	46'-0"	46'-0"	Y	ABS	CRS	Y	Y	Y	Y	Y
412	19	TE-1319	0	RVWL LOWER TAP CAPILLARY COMP TEMP ELEMENT	VC	60'-0"	60'-0"	Y	ABS	CRS	Y	N	N	N	N
413	19	TE-1323	0	UPPER TAP COMPENSATION TEMP. ELEMENT	VC	84'-6"	84'-6"	N	ABS	CRS	Y	Y	Y	Y	Y
414	19	TE-1324	0	UPPER TAP COMPENSATION TEMP. ELEMENT	VC	74'-0"	74'-0"	N	ABS	CRS	Y	Y	Y	Y	Y
415	19	TE-1327	0	RVWL CONDUIT COMPENSATION TEMP ELEMENT	VC	40'-0"	40'-0"	Y	ABS	CRS	Y	Y	Y	Y	Y
416	19	TE-1328	0	RVWL CONDUIT COMPENSATION TEMP ELEMENT	VC	46'-0"	46'-0"	Y	ABS	CRS	Y	Y	Y	Y	Y
417	19	TE-1329	0	RVWL LOWER TAP CAPILLARY COMP. TEMP. ELEMENT	VC	60'-0"	60'-0"	Y	ABS	CRS	Y	N	N	N	N
418	19	TE-411A1	0	RCS LOOP 31 HOT LEG TEMP ELEMENT	VC	55'-0"	55'-0"	Y	ABS	CRS	Y	Y	Y	Y	Y
419	19	TE-411A2	0	RCS LOOP 31 HOT LEG TEMP ELEMENT	VC	55'-0"	55'-0"	Y	ABS	CRS	Y	Y	Y	Y	Y
420	19	TE-411A3	0	RCS LOOP 31 HOT LEG TEMP ELEMENT	VC	55'-0"	55'-0"	Y	ABS	CRS	Y	Y	Y	Y	Y
421	19	TE-411B	0	RCS LOOP 31 COLD LEG TEMP ELEMENT	VC	46'-0"	46'-0"	Y	ABS	CRS	Y	Y	N/A	N	N
422	19	TE-413A	0	RCS LOOP 31 COLD LEG WIDE RANGE TEMP ELEMENT	VC	46'-0"	46'-0"	Y	ABS	CRS	Y	Y	Y	Y	Y
423	19	TE-413B	0	RCS LOOP 31 COLD LEG TEMP ELEMENT	VC	46'-0"	46'-0"	Y	ABS	CRS	Y	Y	Y	Y	Y
424	19	TE-421A1	0	RCS LOOP 32 HOT LEG TEMP ELEMENT	VC	55'-0"	55'-0"	Y	ABS	CRS	Y	Y	Y	Y	Y
425	19	TE-421A2	0	RCS LOOP 32 HOT LEG TEMP ELEMENT	VC	55'-0"	55'-0"	Y	ABS	CRS	Y	Y	Y	Y	Y
426	19	TE-421A3	0	RCS LOOP 32 HOT LEG TEMP ELEMENT	VC	55'-0"	55'-0"	Y	ABS	CRS	Y	Y	Y	Y	Y
427	19	TE-421B	0	RCS LOOP 32 COLD LEG TEMP ELEMENT	VC	46'-0"	46'-0"	Y	ABS	CRS	Y	Y	Y	Y	Y
428	19	TE-423A3	0	RCS LOOP 32 COLD LEG WIDE RANGE TEMP ELEMENT	VC	46'-0"	46'-0"	Y	ABS	CRS	Y	Y	Y	Y	Y
429	19	TE-423B	0	RCS LOOP 32 COLD LEG TEMP ELEMENT	VC	46'-0"	46'-0"	Y	ABS	CRS	Y	Y	Y	Y	Y
430	19	TE-431A1	0	RCS LOOP 33 HOT LEG TEMP ELEMENT	VC	55'-0"	55'-0"	Y	ABS	CRS	Y	Y	Y	Y	Y
431	19	TE-431A2	0	RCS LOOP 33 HOT LEG TEMP ELEMENT	VC	55'-0"	55'-0"	Y	ABS	CRS	Y	Y	Y	Y	Y
432	19	TE-431A3	0	RCS LOOP 33 HOT LEG TEMP ELEMENT	VC	55'-0"	55'-0"	Y	ABS	CRS	Y	Y	Y	Y	Y
433	19	TE-431B	0	RCS LOOP 33 COLD LEG TEMP ELEMENT	VC	46'-0"	46'-0"	Y	ABS	CRS	Y	Y	Y	Y	Y
434	19	TE-433A	0	RCS LOOP 33 COLD LEG WIDE RANGE TEMP ELEMENT	VC	46'-0"	46'-0"	Y	ABS	CRS	Y	Y	Y	Y	Y
435	19	TE-433B	0	RCS LOOP 33 COLD LEG TEMP ELEMENT	VC	46'-0"	46'-0"	Y	ABS	CRS	Y	Y	Y	Y	Y
436	19	TE-441A1	0	RCS LOOP 34 HOT LEG TEMP ELEMENT	VC	55'-0"	55'-0"	Y	ABS	CRS	Y	Y	Y	Y	Y
437	19	TE-441A2	0	RCS LOOP 34 HOT LEG TEMP ELEMENT	VC	55'-0"	55'-0"	Y	ABS	CRS	Y	Y	Y	Y	Y
438	19	TE-441A3	0	RCS LOOP 34 HOT LEG TEMP ELEMENT	VC	55'-0"	55'-0"	Y	ABS	CRS	Y	Y	Y	Y	Y
439	19	TE-441B	0	RCS LOOP 34 COLD LEG TEMP ELEMENT	VC	46'-0"	46'-0"	Y	ABS	CRS	Y	Y	Y	Y	Y
440	19	TE-443A	0	RCS LOOP 34 COLD LEG WIDE RANGE TEMP ELEMENT	VC	46'-0"	46'-0"	Y	ABS	CRS	Y	Y	Y	Y	Y
441	19	TE-443B	0	RCS LOOP 34 COLD LEG TEMP ELEMENT	VC	46'-0"	46'-0"	Y	ABS	CRS	Y	Y	Y	Y	Y
442	19	TE-453	0	PRESSURIZER LIQUID SPACE TEMP ELEMENT	VC	73'-0"	73'-0"	N	ABS	CRS	Y	Y	Y	Y	Y
443	19	TE-454	0	PRESSURIZER STEAM SPACE TEMP ELEMENT	VC	117-0	117-0	N	ABS	CRS	Y	Y	Y	Y	Y
444	19	TE-471	0	PRT TEMP ELEMENT	VC	46'-0"	46'-0"	Y	ABS	CRS	Y	Y	Y	Y	Y

INDIAN POINT NUCLEAR GENERATING STATION UNIT 3
SCREENING VERIFICATION DATA SHEET (SVDS)

Line	Eq. Cl	Eq. ID	Rev No	Equipment Description	Bldg.	Fl. El.	Base El.	<40'?	Cap Spec.	Demd. Spec.	Cap > Demd?	Caveats OK?	Anchor OK?	Interact OK?	Equip OK?
445	19	TE-636	0	RHR HX TEMP INLET TEMP ELEMENT	PA	15'-0"	15'-0"	Y	ABS	CRS	Y	Y	Y	Y	Y
446	19	TE-639	0	RHR HX 31 OUTLET TEMP ELEMENT	VC	68'-0"	68'-0"	N	ABS	CRS	Y	Y	Y	Y	Y
447	19	TE-641	0	RHR HX 32 OUTLET TEMP ELEMENT	VC	46'-0"	46'-0"	Y	ABS	CRS	Y	Y	N/A	N	N
448	20	BF4	0	DG 31 CURRENT XFMR ENCLOSURE	DG	10'-0"	10'-0"	Y	ABS	CRS	Y	N	N	Y	N
449	20	BF5	0	DG 32 CURRENT XFMR ENCLOSURE	DG	10'-0"	10'-0"	Y	ABS	CRS	Y	N	N	Y	N
450	20	BF6	0	DG 33 CURRENT XFMR ENCLOSURE	DG	10'-0"	10'-0"	Y	ABS	CRS	Y	N	N	Y	N
451	20	CAB J01	0	CTMT MONITORING CABINET CHANNEL I	CB	53'-0"	53'-0"	Y	ABS	CRS	Y	Y	Y	Y	Y
452	20	CAB J02	0	CTMT MONITORING CABINET CHANNEL II	CB	53'-0"	53'-0"	Y	ABS	CRS	Y	Y	Y	Y	Y
453	20	CAB JR9	0	RVLIS PANEL	CB	53'-0"	53'-0"	Y	ABS	CRS	Y	Y	Y	Y	Y
454	20	FLIGHT PANEL	0	FLIGHT PANEL	CB	53'-0"	53'-0"	Y	ABS	CRS	Y	N	Y	N	N
455	20	HJ8	0	33/34 ETEF LOCAL CONTROL STATION	CB	33'-0"	33'-0"	Y	ABS	CRS	Y	Y	Y	Y	Y
456	20	HJ9	0	31/32 ETEF LOCAL CONTROL STATION	CB	33'-0"	33'-0"	Y	ABS	CRS	Y	Y	Y	Y	Y
457	20	PNL #1	0	ATM STEAM DUMP PANEL #1	AB	43'-0"	43'-0"	Y	ABS	CRS	Y	Y	Y	Y	Y
458	20	PNL #2	0	ATM STEAM DUMP PANEL #2	AB	43'-0"	43'-0"	Y	ABS	CRS	Y	Y	Y	N	N
459	20	PNL #3	0	SAMPLING SYS CONTROL PANEL #3	PA	55'-0"	55'-0"	Y	ABS	CRS	Y	Y	Y	Y	Y
460	20	PNL #4	0	SAMPLING SYS CONTROL PANEL #4	PA	55'-0"	55'-0"	Y	ABS	CRS	Y	Y	Y	Y	Y
461	20	PNL 1-31	0	31 SG MSIV SOV PANEL	AB	77'-4"	77'-4"	N	ABS	CRS	Y	Y	Y	Y	Y
462	20	PNL 1-32	0	32 SG MSIV SOV PANEL	AB	64'-8"	64'-8"	N	ABS	CRS	Y	Y	Y	Y	Y
463	20	PNL 1-33	0	33 SG MSIV SOV PANEL	AB	77'-4"	77'-4"	N	ABS	CRS	Y	Y	Y	Y	Y
464	20	PNL 1-34	0	34 SG MSIV SOV PANEL	AB	64'-8"	64'-8"	N	ABS	CRS	Y	Y	Y	Y	Y
465	20	PNL 31EDGA	0	31 EDG AUXILIARIES CONTROL PANEL	DG	15'-0"	15'-0"	Y	ABS	CRS	Y	Y	Y	N	N
466	20	PNL 324	0	LIGHTING PANEL 324	AB	18'-6"	18'-6"	Y	ABS	CRS	Y	Y	Y	Y	Y
467	20	PNL 32EDGA	0	32 EDG AUXILIARIES CONTROL PANEL	DG	15'-0"	15'-0"	Y	ABS	CRS	Y	Y	Y	Y	Y
468	20	PNL 33EDGA	0	33 EDG AUXILIARIES CONTROL PANEL	DG	15'-0"	15'-0"	Y	ABS	CRS	Y	Y	Y	N	N
469	20	PNL JC1	0	FAN ROOM CONTROL PANEL	FH	72'-0"	72'-0"	N	ABS	CRS	Y	Y	Y	N	N
470	20	PNL N2	0	N2 BOTTLE SUPPLY PCV PANEL	PA	55'-0"	55'-0"	Y	ABS	CRS	Y	Y	Y	Y	Y
471	20	PNL PF6	0	GAS ANALYZING PANEL	PA	55'-0"	55'-0"	Y	ABS	CRS	Y	Y	Y	N	N
472	20	PNL PI1	0	31 EDG PNEU CONTROL PANEL	DG	15'-0"	15'-0"	Y	ABS	CRS	Y	Y	Y	Y	Y
473	20	PNL PI2	0	32 EDG PNEU CONTROL PANEL	DG	15'-0"	15'-0"	Y	ABS	CRS	Y	Y	Y	Y	Y
474	20	PNL PI3	0	33 EDG PNEU CONTROL PANEL	DG	15'-0"	15'-0"	Y	ABS	CRS	Y	Y	Y	Y	Y
475	20	PNL PI7	0	LOCAL CCR AC CNTRL PANEL	CB	15'-0"	15'-0"	Y	ABS	CRS	Y	Y	Y	Y	Y
476	20	PNL PP9	0	31 EDG CONTROL PANEL	DG	15'-0"	15'-0"	Y	ABS	CRS	Y	Y	Y	Y	Y
477	20	PNL PQ1	0	32 EDG CONTROL PANEL	DG	15'-0"	15'-0"	Y	ABS	CRS	Y	Y	Y	Y	Y
478	20	PNL PQ2	0	33 EDG CONTROL PANEL	DG	15'-0"	15'-0"	Y	ABS	CRS	Y	Y	Y	N	N
479	20	PNL PS6	0	SW PUMP CONTROL STATION	CB	15'-0"	15'-0"	Y	ABS	CRS	Y	Y	Y	N	N
480	20	PNL PT2	0	AUX BOILER FEED PMP CONTROL STATION	AB	18'-6"	18'-6"	Y	ABS	CRS	Y	Y	Y	Y	Y
481	20	PNL PY3	0	DELUGE SYS CONTROL PANEL	PP	34'-0"	34'-0"	Y	ABS	CRS	Y	Y	Y	Y	Y

INDIAN POINT NUCLEAR GENERATING STATION UNIT 3
SCREENING VERIFICATION DATA SHEET (SVDS)

Line	Eq. Cl	Eq. ID	Rev No	Equipment Description	Bldg.	Fl. El.	Base El.	<40'?	Cap Spec.	Demd. Spec.	Cap > Demd?	Caveats OK?	Anchor OK?	Interact OK?	Equip OK?
482	20	PNL PY4	0	DELUGE SYS CONTROL PANEL	PP	34'-0"	34'-0"	Y	ABS	CRS	Y	Y	Y	Y	Y
483	20	PNL PY5	0	DELUGE SYS CONTROL PANEL	PP	34'-0"	34'-0"	Y	ABS	CRS	Y	Y	Y	N	N
484	20	PNL PY6	0	DELUGE SYS. CONTROL PANEL	PP	34'-0"	34'-0"	Y	ABS	CRS	Y	Y	Y	Y	Y
485	20	RACK A-1	0	CCR RACK	CB	53'-0"	53'-0"	Y	ABS	CRS	Y	Y	Y	Y	Y
486	20	RACK A-10	0	CCR RACK	CB	53'-0"	53'-0"	Y	ABS	CRS	Y	Y	Y	Y	Y
487	20	RACK A-2	0	CCR RACK	CB	53'-0"	53'-0"	Y	ABS	CRS	Y	Y	Y	Y	Y
488	20	RACK A-3	0	CCR RACK	CB	53'-0"	53'-0"	Y	ABS	CRS	Y	Y	Y	Y	Y
489	20	RACK A-4	0	CCR RACK	CB	53'-0"	53'-0"	Y	ABS	CRS	Y	Y	Y	Y	Y
490	20	RACK A-5	0	CCR RACK	CB	53'-0"	53'-0"	Y	ABS	CRS	Y	Y	Y	Y	Y
491	20	RACK A-6	0	CCR RACK	CB	53'-0"	53'-0"	Y	ABS	CRS	Y	Y	Y	Y	Y
492	20	RACK A-7	0	CCR RACK	CB	53'-0"	53'-0"	Y	ABS	CRS	Y	Y	Y	Y	Y
493	20	RACK A-8	0	CCR RACK	CB	53'-0"	53'-0"	Y	ABS	CRS	Y	Y	Y	Y	Y
494	20	RACK A-9	0	CCR RACK	CB	53'-0"	53'-0"	Y	ABS	CRS	Y	Y	Y	Y	Y
495	20	RACK B-1	0	CCR RACK	CB	53'-0"	53'-0"	Y	ABS	CRS	Y	Y	Y	Y	Y
496	20	RACK B-10	0	CCR RACK	CB	53'-0"	53'-0"	Y	ABS	CRS	Y	Y	Y	Y	Y
497	20	RACK B-11	0	CCR RACK	CB	53'-0"	53'-0"	Y	ABS	CRS	Y	Y	Y	Y	Y
498	20	RACK B-2	0	CCR RACK	CB	53'-0"	53'-0"	Y	ABS	CRS	Y	Y	Y	Y	Y
499	20	RACK B-3	0	CCR RACK	CB	53'-0"	53'-0"	Y	ABS	CRS	Y	Y	Y	Y	Y
500	20	RACK B-4	0	CCR RACK	CB	53'-0"	53'-0"	Y	ABS	CRS	Y	Y	Y	Y	Y
501	20	RACK B-5	0	CCR RACK	CB	53'-0"	53'-0"	Y	ABS	CRS	Y	Y	Y	Y	Y
502	20	RACK B-6	0	CCR RACK	CB	53'-0"	53'-0"	Y	ABS	CRS	Y	Y	Y	Y	Y
503	20	RACK B-7	0	CCR RACK	CB	53'-0"	53'-0"	Y	ABS	CRS	Y	Y	Y	Y	Y
504	20	RACK B-8	0	CCR RACK	CB	53'-0"	53'-0"	Y	ABS	CRS	Y	Y	Y	Y	Y
505	20	RACK B-9	0	CCR RACK	CB	53'-0"	53'-0"	Y	ABS	CRS	Y	Y	Y	Y	Y
506	20	RACK C-1	0	CCR RACK	CB	53'-0"	53'-0"	Y	ABS	CRS	Y	Y	Y	Y	Y
507	20	RACK C-10	0	CCR RACK	CB	53'-0"	53'-0"	Y	ABS	CRS	Y	Y	Y	Y	Y
508	20	RACK C-11	0	CCR RACK	CB	53'-0"	53'-0"	Y	ABS	CRS	Y	N	N	Y	N
509	20	RACK C-2	0	CCR RACK	CB	53'-0"	53'-0"	Y	ABS	CRS	Y	Y	Y	Y	Y
510	20	RACK C-3	0	CCR RACK	CB	53'-0"	53'-0"	Y	ABS	CRS	Y	Y	Y	Y	Y
511	20	RACK C-4	0	CCR RACK	CB	53'-0"	53'-0"	Y	ABS	CRS	Y	Y	Y	Y	Y
512	20	RACK C-5	0	CCR RACK	CB	53'-0"	53'-0"	Y	ABS	CRS	Y	Y	Y	Y	Y
513	20	RACK C-6	0	CCR RACK	CB	53'-0"	53'-0"	Y	ABS	CRS	Y	Y	Y	Y	Y
514	20	RACK C-7	0	CCR RACK	CB	53'-0"	53'-0"	Y	ABS	CRS	Y	Y	Y	Y	Y
515	20	RACK C-8	0	CCR RACK	CB	53'-0"	53'-0"	Y	ABS	CRS	Y	Y	Y	Y	Y
516	20	RACK C-9	0	CCR RACK	CB	53'-0"	53'-0"	Y	ABS	CRS	Y	Y	Y	Y	Y
517	20	RACK D-1	0	CCR RACK	CB	53'-0"	53'-0"	Y	ABS	CRS	Y	Y	Y	Y	Y
518	20	RACK D-10	0	CCR RACK	CB	53'-0"	53'-0"	Y	ABS	CRS	Y	Y	Y	Y	Y

INDIAN POINT NUCLEAR GENERATING STATION UNIT 3
SCREENING VERIFICATION DATA SHEET (SVDS)

Line	Eq. Cl	Eq. ID	Rev No	Equipment Description	Bldg.	Fl. El.	Base El.	<40'?	Cap Spec.	Demd. Spec.	Cap > Demd?	Caveats OK?	Anchor OK?	Interact OK?	Equip OK?
519	20	RACK D-11	0	CCR RACK	CB	53'-0"	53'-0"	Y	ABS	CRS	Y	Y	Y	Y	Y
520	20	RACK D-2	0	CCR RACK	CB	53'-0"	53'-0"	Y	ABS	CRS	Y	Y	Y	Y	Y
521	20	RACK D-3	0	CCR RACK	CB	53'-0"	53'-0"	Y	ABS	CRS	Y	Y	Y	Y	Y
522	20	RACK D-4	0	CCR RACK	CB	53'-0"	53'-0"	Y	ABS	CRS	Y	Y	Y	Y	Y
523	20	RACK D-5	0	CCR RACK	CB	53'-0"	53'-0"	Y	ABS	CRS	Y	Y	Y	Y	Y
524	20	RACK D-6	0	CCR RACK	CB	53'-0"	53'-0"	Y	ABS	CRS	Y	Y	Y	Y	Y
525	20	RACK D-7	0	CCR RACK	CB	53'-0"	53'-0"	Y	ABS	CRS	Y	Y	Y	Y	Y
526	20	RACK D-8	0	CCR RACK	CB	53'-0"	53'-0"	Y	ABS	CRS	Y	Y	Y	Y	Y
527	20	RACK D-9	0	CCR RACK	CB	53'-0"	53'-0"	Y	ABS	CRS	Y	Y	Y	Y	Y
528	20	RACK E-1	0	CCR RACK	CB	53'-0"	53'-0"	Y	ABS	CRS	Y	Y	Y	Y	Y
529	20	RACK E-2	0	CCR RACK	CB	53'-0"	53'-0"	Y	ABS	CRS	Y	Y	Y	Y	Y
530	20	RACK E-3	0	CCR RACK	CB	53'-0"	53'-0"	Y	ABS	CRS	Y	Y	Y	Y	Y
531	20	RACK E-4	0	CCR RACK	CB	53'-0"	53'-0"	Y	ABS	CRS	Y	Y	Y	Y	Y
532	20	RACK E-5	0	CCR RACK	CB	53'-0"	53'-0"	Y	ABS	CRS	Y	Y	Y	Y	Y
533	20	RACK E-6	0	CCR RACK	CB	53'-0"	53'-0"	Y	ABS	CRS	Y	Y	Y	Y	Y
534	20	RACK E-7	0	CCR RACK	CB	53'-0"	53'-0"	Y	ABS	CRS	Y	Y	Y	Y	Y
535	20	RACK F-1	0	CCR RACK	CB	53'-0"	53'-0"	Y	ABS	CRS	Y	Y	Y	Y	Y
536	20	RACK F-2	0	CCR RACK	CB	53'-0"	53'-0"	Y	ABS	CRS	Y	Y	Y	Y	Y
537	20	RACK F-3	0	CCR RACK	CB	53'-0"	53'-0"	Y	ABS	CRS	Y	Y	Y	Y	Y
538	20	RACK F-4	0	CCR RACK	CB	53'-0"	53'-0"	Y	ABS	CRS	Y	Y	Y	Y	Y
539	20	RACK F-5	0	CCR RACK	CB	53'-0"	53'-0"	Y	ABS	CRS	Y	Y	Y	Y	Y
540	20	RACK F-6	0	CCR RACK	CB	53'-0"	53'-0"	Y	ABS	CRS	Y	Y	Y	Y	Y
541	20	RACK F-7	0	CCR RACK	CB	53'-0"	53'-0"	Y	ABS	CRS	Y	N	Y	N	N
542	20	RACK G-1	0	CCR RACK	CB	53'-0"	53'-0"	Y	ABS	CRS	Y	Y	Y	Y	Y
543	20	RACK G-2	0	CCR RACK	CB	53'-0"	53'-0"	Y	ABS	CRS	Y	N	Y	Y	N
544	20	RACK G-3	0	CCR RACK	CB	53'-0"	53'-0"	Y	ABS	CRS	Y	N	Y	Y	N
545	20	RACK G-4	0	CCR RACK	CB	53'-0"	53'-0"	Y	ABS	CRS	Y	Y	Y	Y	Y
546	20	RACK G-5	0	CCR RACK	CB	53'-0"	53'-0"	Y	ABS	CRS	Y	Y	Y	Y	Y
547	20	RACK G-6	0	CCR RACK	CB	53'-0"	53'-0"	Y	ABS	CRS	Y	Y	Y	Y	Y
548	20	RACK H-1	0	CCR RACK	CB	53'-0"	53'-0"	Y	ABS	CRS	Y	Y	Y	Y	Y
549	20	RACK H-2	0	CCR RACK	CB	53'-0"	53'-0"	Y	ABS	CRS	Y	Y	N	Y	N
550	20	RACK H-3	0	CCR RACK	CB	53'-0"	53'-0"	Y	ABS	CRS	Y	Y	N	Y	N
551	20	RACK H-4	0	CCR RACK	CB	53'-0"	53'-0"	Y	ABS	CRS	Y	Y	Y	Y	Y
552	20	RACK H-5	0	CCR RACK	CB	53'-0"	53'-0"	Y	ABS	CRS	Y	Y	Y	Y	Y
553	20	SUPERVISORY PANEL	0	SUPERVISORY PANEL	CB	53'-0"	53'-0"	Y	ABS	CRS	Y	N	N	Y	N
554	20	TB X32	0	RELAY TERMINAL BOX	AB	18'-6"	18'-6"	Y	ABS	CRS	Y	Y	Y	Y	Y
555	20	TB Y21	0	RELAY TERMINAL BOX	ET	34'-0"	34'-0"	Y	ABS	CRS	Y	Y	Y	Y	Y

INDIAN POINT NUCLEAR GENERATING STATION UNIT 3
SCREENING VERIFICATION DATA SHEET (SVDS)

Line	Eq. Cl	Eq. ID	Rev No	Equipment Description	Bldg.	Fl. El.	Base El.	<40'?	Cap Spec.	Demd. Spec.	Cap > Demd?	Caveats OK?	Anchor OK?	Interact OK?	Equip OK?
556	21	0031ART	0	AIR RECEIVER 30 GAL. TANK # 31	DG	15'-0"	15'-0"	Y	ABS	CRS	Y	N/A	N	Y	N
557	21	0031ARTMSIV	0	AIR ACCUMULATOR(31) MS-1-31	CB	46'-0"	46'-0"	Y	ABS	CRS	Y	N/A	Y	Y	Y
558	21	0031CHPS	0	31 CHARG PMP SUCT STABILIZER SEPARATOR	PA	55'-0"	55'-0"	Y	ABS	CRS	Y	N/A	N	Y	N
559	21	0031CWHX	0	31 I/A CMPR CL,COOLING WTR HX	CB	15'-0"	15'-0"	Y	ABS	CRS	Y	Y*	Y	Y	Y*
560	21	0031EDJET	0	JKT WTR EXP TANK 31 DG	DG	26'-0"	26'-0"	Y	ABS	CRS	Y	N/A	Y	Y	Y
561	21	0031EDSAT	0	START AIR TANK 31 DG	DG	15'-0"	15'-0"	Y	ABS	CRS	Y	N/A	N/A	N/A	Y
562	21	0032ART	0	AIR RECEIVER 30 GAL. TANK # 32	DG	15'-0"	15'-0"	Y	ABS	CRS	Y	N/A	N	Y	N
563	21	0032ARTMSIV	0	AIR ACCUMULATOR(32) MS-1-32	CB	46'-0"	46'-0"	Y	ABS	CRS	Y	N/A	Y	Y	Y
564	21	0032CHPS	0	32 CHARG PMP SUCT STABILIZER SEPARATOR	PA	55'-0"	55'-0"	Y	ABS	CRS	Y	N/A	N	Y	N
565	21	0032CWHX	0	32 I/A CMPR CL COOLING WTR HX	CB	15'-0"	15'-0"	Y	ABS	CRS	Y	Y*	Y	Y	Y*
566	21	0032EDJET	0	JKT WTR EXP TANK 32 DG	DG	26'-0"	26'-0"	Y	ABS	CRS	Y	N/A	Y	Y	Y
567	21	0032EDSAT	0	START AIR TANK 32 DG	DG	15'-0"	15'-0"	Y	ABS	CRS	Y	N/A	N/A	N/A	Y
568	21	0033ART	0	AIR RECEIVER 30 GAL. TANK # 33	DG	15'-0"	15'-0"	Y	ABS	CRS	Y	N/A	N	Y	N
569	21	0033ARTMSIV	0	AIR ACCUMULATOR(33) MS-1-33	CB	46'-0"	46'-0"	Y	ABS	CRS	Y	N/A	Y	Y	Y
570	21	0033CHPS	0	33 CHARG PMP SUCT STABILIZER SEPARATOR	PA	55'-0"	55'-0"	Y	ABS	CRS	Y	N/A	N	Y	N
571	21	0033EDJET	0	JKT WTR EXP TANK 33 DG	DG	26'-0"	26'-0"	Y	ABS	CRS	Y	N/A	Y	Y	Y
572	21	0033EDSAT	0	START AIR TANK 33 DG	DG	15'-0"	15'-0"	Y	ABS	CRS	Y	N/A	N/A	N/A	Y
573	21	0034ARTMSIV	0	AIR ACCUMULATOR (34) MS-1-34	CB	46'-0"	46'-0"	Y	ABS	CRS	Y	N/A	Y	Y	Y
574	21	31 PLSSHTX	0	31 PZR LIQ SPACE SAMPLE HTX	PA	55'-0"	55'-0"	Y	ABS	CRS	Y	N/A	Y	N	N
575	21	31 RCSSHTX	0	31 RCS SAMPLE HTX	PA	55'-0"	55'-0"	Y	ABS	CRS	Y	N/A	Y	N	N
576	21	32 PLSSHTX	0	32 PZR LIQ SPACE SAMPLE HTX	PA	55'-0"	55'-0"	Y	ABS	CRS	Y	N/A	Y	N	N
577	21	32 RCSSHTX	0	32 RCS SAMPLE HTX	PA	55'-0"	55'-0"	Y	ABS	CRS	Y	N/A	Y	N	N
578	21	ACAHCC1	0	CCW HEAT EXCH NO 31	PA	55'-0"	55'-0"	Y	ABS	CRS	Y	N/A	N/A	N/A	Y
579	21	ACAHCC2	0	CCW HEAT EXCH NO.32	PA	55'-0"	55'-0"	Y	ABS	CRS	Y	N/A	Y	Y	Y
580	21	ACAHRS1	0	RHR HTEXCH # 31	VC	66'-0"	66'-0"	N	ABS	CRS	Y	N/A	N/A	N/A	Y
581	21	ACAHRS2	0	RHR HTEXCH # 32	VC	66'-0"	66'-0"	N	ABS	CRS	Y	N/A	N/A	N/A	Y
582	21	ACATCC1	0	CC SURGE TANK #31	PA	73'-0"	73'-0"	N	ABS	CRS	Y	N/A	Y	Y	Y
583	21	ACATCC2	0	CC SURGE TANK #32	PA	73'-0"	73'-0"	N	ABS	CRS	Y	N/A	Y	Y	Y
584	21	CSAHEL1	0	31 EXCS LETDWN HTX	VC	68'-0"	68'-0"	N	ABS	CRS	Y	N/A	Y	Y	Y
585	21	CSAHNRT	0	NON REGEN HEAT EXCH NO 31	PA	73'-0	73'-0	N	ABS	CRS	Y	N/A	Y	Y	Y
586	21	CSAHRG1	0	31 REGEN HTX	VC	68'-0"	68'-0"	N	ABS	CRS	Y	N/A	N	N	N
587	21	CSAHSW1	0	SEAL WTR HEAT EXCH NO. 31	PA	73'-0"	73'-0"	N	ABS	CRS	Y	N/A	Y	Y	Y
588	21	CSATBA1	0	BORIC ACID STG TANK 31	PA	73'-0	73'-0	N	ABS	CRS	Y	N/A	Y	Y	Y
589	21	CSATBA2	0	BORIC ACID STG TANK 32	PA	73'-0"	73'-0"	N	ABS	CRS	Y	N/A	Y	Y	Y
590	21	CSATVC1	0	VOLUME CONTROL TANK NO. 31	PA	73'-0"	73'-0"	N	ABS	CRS	Y	N/A	Y	Y	Y
591	21	CST	0	CONDENSATE STOR TANK	YD	69'-0"	69'-0"	N	ABS	CRS	Y	Y	N	Y	N
592	21	DRYER SET 31	0	HEATLESS DESSICANT DRYER SKID	CB	15'-0"	15'-0"	Y	ABS	CRS	Y	Y	Y	Y	Y

INDIAN POINT NUCLEAR GENERATING STATION UNIT 3
SCREENING VERIFICATION DATA SHEET (SVDS)

Line	Eq. Cl	Eq. ID	Rev No	Equipment Description	Bldg.	Fl. El.	Base El.	<40'?	Cap Spec.	Demd. Spec.	Cap > Demd?	Caveats OK?	Anchor OK?	Interact OK?	Equip OK?
593	21	DRYER SET 32	0	DESSICANT DRYER SKID 32	CB	15'-0"	15'-0"	Y	ABS	CRS	Y	N/A	Y	Y	Y
594	21	EDG-31-FO-DTNK	0	F.O. DAY TANK NO. 31	DG	26'-0"	26'-0"	Y	ABS	CRS	Y	N/A	N/A	N/A	Y
595	21	EDG-31-FO-STNK	0	F.O. STORAGE TANK 31	YD	27'-0"	27'-0"	Y	ABS	CRS	Y	N/A	Y	Y	Y
596	21	EDG-32-FO-DTNK	0	F.O. DAY TANK NO. 32	DG	26'-0"	26'-0"	Y	ABS	CRS	Y	N/A	N/A	N/A	Y
597	21	EDG-32-FO-STNK	0	F.O. STORAGE TANK 32	YD	27'-0"	27'-0"	Y	ABS	CRS	Y	N/A	Y	Y	Y
598	21	EDG-33-FO-DTNK	0	F.O. DAY TANK NO. 33	DG	26'-0"	26'-0"	Y	ABS	CRS	Y	N/A	N/A	N/A	Y
599	21	EDG-33-FO-STNK	0	F.O. STORAGE TANK 33	YD	27'-0"	27'-0"	Y	ABS	CRS	Y	N/A	Y	Y	Y
600	21	IA-31-TK	0	INST AIR RECEIVER	CB	15'-0"	15'-0"	Y	ABS	CRS	Y	N/A	N/A	N/A	Y
601	21	IACCHT	0	INSTRUMENT AIR CLOSED COOLING HEAD TANK	CB	33'-0"	33'-0"	Y	ABS	CRS	Y	N/A	Y	Y	Y
602	21	PWST 21	0	PRIMARY WATER STORAGE TANK	YD	54'-0"	54'-0"	Y	ABS	CRS	Y	Y	N	Y	N
603	21	RWST-31	0	REFUEL WTR STORAGE TANK	YD	80'-0"	80'-0"	Y	ABS	CRS	Y	Y	N	Y	N

Certification

The information provided to the Seismic Capability Engineers regarding systems and operations of the equipment contained in these SVDS is, to the best of our knowledge and belief, correct and accurate.

Approved: (One signature of Systems or Operations Engineer is required if the Seismic Capability Engineer deems it necessary.)

Signature _____ Date 10/22/95

Jon E. Thompson, P.E.

ATOMETRICS

INDIAN POINT NUCLEAR GENERATING STATION UNIT 3
SCREENING VERIFICATION DATA SHEET (SVDS)

Line	Eq. Cl	Eq. ID	Rev No	Equipment Description	Bldg.	Fl. El.	Base El.	<40'?	Cap Spec.	Demd. Spec.	Cap > Demd?	Caveats OK?	Anchor OK?	Interact OK?	Equip OK?

Certification

All the information contained on these Screening and Verification Data Sheets (SVDS) is, to the best of our knowledge and belief, correct and accurate. "All information" includes each entry and conclusion (whether verified to be seismically adequate or not).

Approved: (Signatures of all Seismic Capability Engineers on the Seismic Review Team (SRT) are required; there should be at least two on the SRT. All signatories should agree with all the entries and conclusions. One signatory should be a licensed professional engineer.)

Signature Paul Smith Date 10/23/95
Paul Smith, P.E.

Signature [illegible] Date 10/24/95
Harry Johnson, P.E.

Signature Mara Lakis Date 10/20/95
Mara Lakis

Signature [illegible] Date 10/26/95
Arun Pal, P.E.

ATOMETRICS

APPENDIX E

CABLE TRAY AND CONDUIT RACEWAY PLANT AREA SUMMARY SHEETS

(PASSs)

INDIAN POINT NUCLEAR GENERATING STATION UNIT 3
CABLE TRAY AND CONDUIT RACEWAY
PLANT AREA SUMMARY SHEETS

RACEWAY DESIGNATION No.	BUILDING	ELEVATION	STATUS
AREA 1	VC	46'-0"	Areas were walked down to selecte worst case supports for the LAR, however, the PASS forms were not completed. Areas will be rewalked to document review when VC is accessible.
AREA 2	VC	68'-0"	
AREA 3	VC	95'-0"	
* AREA 4	AB	18'-6"	Complete
AREA 5	AB	32'-6"	Complete
* AREA 6	AB	43'-0"	Complete
AREA 7	AB	64'-8"	Complete
AREA 8	AB	77'-4"	Complete
* AREA 9	CB	15'-0"	Complete
* AREA 10	CB	33'-0"	Complete
AREA 11	CB	53'-0"	The Control Room was walked down to select the worst case supports for the LAR, however, the PASS form was not completed. Area will be rewalked to document review.
AREA 12	DG	15'-0"	Complete
* AREA 13	ET	34'-0"	Complete
* AREA 14	ET	46'-0"	Complete
AREA 15	FR	72'-0"	Complete

* Areas where worst case cable tray and conduit supports were selected for the Limited Analytical Review (LAR), See Appendix E.

INDIAN POINT NUCLEAR GENERATING STATION UNIT 3
CABLE TRAY AND CONDUIT RACEWAY
PLANT AREA SUMMARY SHEETS

RACEWAY DESIGNATION No.	BUILDING	ELEVATION	STATUS
AREA 16	PP	35'-0"	Area was walked down to select the worst case supports for the LAR, however, due to this being a high radiation area, the PASS form was not completed. Area will be rewalked to document review.
AREA 17	PP	41'-0"	Complete
AREA 18	PP	51'-0"	Complete
AREA 19	IS	15'-0"	Complete
AREA 20	PA	15'-0"	Complete
AREA 21	PA	34'-0"	Complete
* AREA 22	PA	41'-0"	Complete
AREA 23	PA	55'-0"	Complete
AREA 24	PA	73'-0"	Complete
AREA 25	PA	80'-0"	Complete
AREA 26	TB	15'-0"	Complete

* Areas where worst case cable tray and conduit supports were selected for the Limited Analytical Review (LAR), See Appendix E.

INDIAN POINT UNIT #3 Plant Area Summary Sheet (PASS)

Building: AB Elevation: 18'6" ~~15'-0"~~ Area: _____

Raceway Designation Number (if applicable): _____

Inclusion Rule Review

1. Cable tray spans . . . . . Y
2. Conduit spans . . . . . Y
3. Tie downs . . . . . Y
4. Channel nuts . . . . . Y
5. Rigid boots . . . . . Y
6. Beam clamps . . . . . Y
7. Cast iron inserts . . . . . Y

Other Seismic Performance Indicators

8. Anchor bolts . . . . . Y
9. Welded connections . . . . . Y
10. Concrete condition . . . . . Y
11. Corrosion . . . . . Y
12. Sagging raceways . . . . . Y
13. Broken or missing components and sharp edges . Y
14. Restraint of cables . . . . . Y
15. Cable fill/ties . . . . . Y
16. Aging of plastic ties . . . . . Y
17. System hardspots . . . . . Y
18. Short rods . . . . . Y

Seismic Interaction Review

19. Proximate features . . . . . Y
20. Falling hazard . . . . . Y
21 Differential displacement . . . . . Y
22. Isolated outliers . . . . . Y

Additional Comments:

19 3" conduit support over 33 Aux Boiler Feed Pump will interact with tubing. Not a hazard to conduit.

Photos: Roll 60 1, 3, & 4 photos

3 4" conduit over 32 Aux Boiler Feed Pump not tied down to 4 supports. Judged OK. (Photo 60-5)

Paul D. Smith/SCE, PE: Paul Smith Date: 10/12/95

Harry Johnson/SCE, PE: [signature] Date: 10/12/95

INDIAN POINT UNIT #3 **Plant Area Summary Sheet (PASS)**

Building: AB Elevation: 32'-6" Area: _____

Raceway Designation Number (if applicable): _____

Inclusion Rule Review

1. Cable tray spans . . . . . Y
2. Conduit spans . . . . . Y
3. Tie downs . . . . . Y
4. Channel nuts . . . . . Y
5. Rigid boots . . . . . Y
6. Beam clamps . . . . . Y
7. Cast iron inserts . . . . . Y

Other Seismic Performance Indicators

8. Anchor bolts . . . . . Y
9. Welded connections . . . . . Y
10. Concrete condition . . . . . Y
11. Corrosion . . . . . Y
12. Sagging raceways . . . . . Y
13. Broken or missing components and sharp edges . Y
14. Restraint of cables . . . . . Y
15. Cable fill/ties . . . . . Y
16. Aging of plastic ties . . . . . Y
17. System hardspots . . . . . Y
18. Short rods . . . . . Y

Seismic Interaction Review

19. Proximate features . . . . . Y
20. Falling hazard . . . . . Y
21 Differential displacement . . . . . Y
22. Isolated outliers . . . . . Y

Additional Comments:

Photo 60-9, 60-6, 60-7, 60-8

Paul D. Smith/SCE, PE: Paul Smith Date: 10/12/95

Harry Johnson/SCE, PE: [signature] Date: 10/12/95

INDIAN POINT UNIT #3 **Plant Area Summary Sheet (PASS)**

Building: AB Elevation: ~~43'-0"~~ 43'-0" B/27 Area: _____

Raceway Designation Number (if applicable): _____

Inclusion Rule Review

1. Cable tray spans . . . . . Y
2. Conduit spans . . . . . Y
3. Tie downs . . . . . Y
4. Channel nuts . . . . . Y
5. Rigid boots . . . . . Y
6. Beam clamps . . . . . Y
7. Cast iron inserts . . . . . Y

Other Seismic Performance Indicators

8. Anchor bolts . . . . . Y
9. Welded connections . . . . . Y
10. Concrete condition . . . . . Y
11. Corrosion . . . . . Y
12. Sagging raceways . . . . . Y
13. Broken or missing components and sharp edges . Y
14. Restraint of cables . . . . . Y
15. Cable fill/ties . . . . . Y
16. Aging of plastic ties . . . . . Y
17. System hardspots . . . . . Y
18. Short rods . . . . . Y

Seismic Interaction Review

19. Proximate features . . . . . Y
20. Falling hazard . . . . . Y
21 Differential displacement . . . . . Y
22. Isolated outliers . . . . . Y

Additional Comments:

Paul D. Smith/SCE, PE: Paul Smith Date: 10/12/95

Harry Johnson/SCE, PE: [signature] Date: 10/12/95

INDIAN POINT UNIT #3 **Plant Area Summary Sheet (PASS)**

Building: AB Elevation: ~~61'-0"~~ 64'-8" Area: _____

Raceway Designation Number (if applicable): _____

Inclusion Rule Review

1. Cable tray spans . . . . . Y
2. Conduit spans . . . . . Y
3. Tie downs . . . . . Y
4. Channel nuts . . . . . Y
5. Rigid boots . . . . . Y
6. Beam clamps . . . . . Y
7. Cast iron inserts . . . . . Y

Other Seismic Performance Indicators

8. Anchor bolts . . . . . Y
9. Welded connections . . . . . Y
10. Concrete condition . . . . . Y
11. Corrosion . . . . . Y
12. Sagging raceways . . . . . Y
13. Broken or missing components and sharp edges . Y
14. Restraint of cables . . . . . Y
15. Cable fill/ties . . . . . Y
16. Aging of plastic ties . . . . . Y
17. System hardspots . . . . . Y
18. Short rods . . . . . Y

Seismic Interaction Review

19. Proximate features . . . . . Y
20. Falling hazard . . . . . Y
21 Differential displacement . . . . . Y
22. Isolated outliers . . . . . Y

Additional Comments:

Photos 60-13

Paul D. Smith/SCE, PE: Paul Smith **Date:** 10/12/95

Harry Johnson/SCE, PE: [signature] **Date:** 10/12/95

INDIAN POINT UNIT #3 **Plant Area Summary Sheet (PASS)**

Building: AB Elevation: ~~74'-0"~~ 77'-4" Area: _____

Raceway Designation Number (if applicable): _____

Inclusion Rule Review

1. Cable tray spans . . . . . Y
2. Conduit spans . . . . . Y
3. Tie downs . . . . . Y
4. Channel nuts . . . . . Y
5. Rigid boots . . . . . Y
6. Beam clamps . . . . . Y
7. Cast iron inserts . . . . . Y

Other Seismic Performance Indicators

8. Anchor bolts . . . . . Y
9. Welded connections . . . . . Y
10. Concrete condition . . . . . Y
11. Corrosion . . . . . Y
12. Sagging raceways . . . . . Y
13. Broken or missing components and sharp edges . Y
14. Restraint of cables . . . . . Y
15. Cable fill/ties . . . . . Y
16. Aging of plastic ties . . . . . Y
17. System hardspots . . . . . Y
18. Short rods . . . . . Y

Seismic Interaction Review

19. Proximate features . . . . . Y
20. Falling hazard . . . . . Y
21 Differential displacement . . . . . Y
22. Isolated outliers . . . . . Y

Additional Comments:

Photo 60-14, 15

Paul D. Smith/SCE, PE: Paul Smith Date: 10/12/95

Harry Johnson/SCE, PE: H. Johnson Date: 10/12/95

INDIAN POINT UNIT #3 — Plant Area Summary Sheet (PASS)

Building: CB Elevation: 15'-0" Area: _____

Raceway Designation Number (if applicable): _____

Inclusion Rule Review

1.	Cable tray spans	Y
2.	Conduit spans	Y
3.	Tie downs	Y
4.	Channel nuts	Y
5.	Rigid boots	Y
6.	Beam clamps	Y
7.	Cast iron inserts	Y

Other Seismic Performance Indicators

8.	Anchor bolts	Y
9.	Welded connections	Y
10.	Concrete condition	Y
11.	Corrosion	Y
12.	Sagging raceways	Y
13.	Broken or missing components and sharp edges	Y
14.	Restraint of cables	Y
15.	Cable fill/ties	Y
16.	Aging of plastic ties	Y
17.	System hardspots	Y
18.	Short rods	Y

Seismic Interaction Review

19.	Proximate features	Y
20.	Falling hazard	Y
21	Differential displacement	Y
22.	Isolated outliers	Y

Additional Comments:

Photo 60-16, 17, 18

Paul D. Smith/SCE, PE: Paul Smith Date: 10/12/95

Harry Johnson/SCE, PE: [signature] Date: 10/12/95

INDIAN POINT UNIT #3 — Plant Area Summary Sheet (PASS)

Building: CB Elevation: 33'-0" Area: _____

Raceway Designation Number (if applicable): _____

Inclusion Rule Review

1. Cable tray spans . . . . . Y
2. Conduit spans . . . . . Y
3. Tie downs . . . . . Y
4. Channel nuts . . . . . Y
5. Rigid boots . . . . . Y*
6. Beam clamps . . . . . Y
7. Cast iron inserts . . . . . Y

Other Seismic Performance Indicators

8. Anchor bolts . . . . . Y
9. Welded connections . . . . . Y
10. Concrete condition . . . . . Y
11. Corrosion . . . . . Y
12. Sagging raceways . . . . . Y
13. Broken or missing components and sharp edges . Y
14. Restraint of cables . . . . . Y
15. Cable fill/ties . . . . . Y
16. Aging of plastic ties . . . . . Y
17. System hardspots . . . . . Y
18. Short rods . . . . . Y

Seismic Interaction Review

19. Proximate features . . . . . Y
20. Falling hazard . . . . . Y
21 Differential displacement . . . . . Y
22. Isolated outliers . . . . . Y

Additional Comments:

(Subsequent close inspection of the suspected "rigid boot" revealed it is not a "rigid boot")

Photo 60-19

(5) Supports for 3 conduit to CFMS Multiplexer Isolation Cabinet have apparent "rigid boot" supports at ceiling (6± connections). Judged not to be a problem because supports cannot move laterally sufficiently to cause "rigid boot failure mode" (Photo-60-23)

Several Other apparent rigid boots were also found. All judged OK.

Paul D. Smith/SCE, PE: Paul Smith Date: 10/12/95

Harry Johnson/SCE, PE: [signature] Date: 10/12/95

INDIAN POINT UNIT #3 **Plant Area Summary Sheet (PASS)**

Building: DG Elevation: 15'-0" Area: _____

Raceway Designation Number (if applicable): _____

Inclusion Rule Review

1. Cable tray spans . . . . . Y
2. Conduit spans . . . . . Y
3. Tie downs . . . . . Y
4. Channel nuts . . . . . Y
5. Rigid boots . . . . . Y
6. Beam clamps . . . . . Y
7. Cast iron inserts . . . . . Y

Other Seismic Performance Indicators

8. Anchor bolts . . . . . Y
9. Welded connections . . . . . Y
10. Concrete condition . . . . . Y
11. Corrosion . . . . . Y
12. Sagging raceways . . . . . Y
13. Broken or missing components and sharp edges . Y
14. Restraint of cables . . . . . Y
15. Cable fill/ties . . . . . Y
16. Aging of plastic ties . . . . . Y
17. System hardspots . . . . . Y
18. Short rods . . . . . Y

Seismic Interaction Review

19. Proximate features . . . . . Y
20. Falling hazard . . . . . Y
21 Differential displacement . . . . . Y
22. Isolated outliers . . . . . Y

Additional Comments:

Paul D. Smith/SCE, PE: Paul Smith Date: 10/12/95

Harry Johnson/SCE, PE: [signature] Date: 10/12/95

INDIAN POINT UNIT #3 **Plant Area Summary Sheet (PASS)**

Building: ET Elevation: 34'-0" Area: _____

Raceway Designation Number (if applicable): _____

Inclusion Rule Review

1. Cable tray spans . . . . . Y
2. Conduit spans . . . . . Y
3. Tie downs . . . . . Y
4. Channel nuts . . . . . Y
5. Rigid boots . . . . . Y
6. Beam clamps . . . . . Y
7. Cast iron inserts . . . . . Y

Other Seismic Performance Indicators

8. Anchor bolts . . . . . Y
9. Welded connections . . . . . Y
10. Concrete condition . . . . . Y
11. Corrosion . . . . . Y
12. Sagging raceways . . . . . Y
13. Broken or missing components and sharp edges . Y
14. Restraint of cables . . . . . Y
15. Cable fill/ties . . . . . Y
16. Aging of plastic ties . . . . . Y
17. System hardspots . . . . . Y
18. Short rods . . . . . Y

Seismic Interaction Review

19. Proximate features . . . . . Y
20. Falling hazard . . . . . Y
21 Differential displacement . . . . . Y
22. Isolated outliers . . . . . Y

Additional Comments:

Paul D. Smith/SCE, PE: Paul Smith Date: 10/12/95

Harry Johnson/SCE, PE: [illegible] Date: 10/12/95

INDIAN POINT UNIT #3 **Plant Area Summary Sheet (PASS)**

Building: ET Elevation: 46'-0" Area: _____

Raceway Designation Number (if applicable): _____

Inclusion Rule Review

1. Cable tray spans . . . . . Y
2. Conduit spans . . . . . Y
3. Tie downs . . . . . Y
4. Channel nuts . . . . . Y
5. Rigid boots . . . . . Y
6. Beam clamps . . . . . Y
7. Cast iron inserts . . . . . Y

Other Seismic Performance Indicators

8. Anchor bolts . . . . . Y
9. Welded connections . . . . . Y
10. Concrete condition . . . . . Y
11. Corrosion . . . . . Y
12. Sagging raceways . . . . . Y
13. Broken or missing components and sharp edges . Y
14. Restraint of cables . . . . . Y
15. Cable fill/ties . . . . . Y
16. Aging of plastic ties . . . . . Y
17. System hardspots . . . . . Y
18. Short rods . . . . . Y

Seismic Interaction Review

19. Proximate features . . . . . Y
20. Falling hazard . . . . . Y
21 Differential displacement . . . . . Y
22. Isolated outliers . . . . . Y

Additional Comments:

Photo 60-26

(3) A few CT clips to support missing. OK because adjacent supports have clips & clips at wall exist.

Paul D. Smith/SCE, PE: Paul Smith Date: 10/12/95

Harry Johnson/SCE, PE: [signature] Date: 10/12/95

INDIAN POINT UNIT #3 — Plant Area Summary Sheet (PASS)

Building: FR Elevation: 72'-0" Area: _____

Raceway Designation Number (if applicable): _____

Inclusion Rule Review

1.	Cable tray spans	Y
2.	Conduit spans	Y
3.	Tie downs	Y
4.	Channel nuts	Y
5.	Rigid boots	Y
6.	Beam clamps	Y
7.	Cast iron inserts	Y

Other Seismic Performance Indicators

8.	Anchor bolts	Y
9.	Welded connections	Y
10.	Concrete condition	Y
11.	Corrosion	Y
12.	Sagging raceways	Y
13.	Broken or missing components and sharp edges	Y
14.	Restraint of cables	Y
15.	Cable fill/ties	Y
16.	Aging of plastic ties	Y
17.	System hardspots	Y
18.	Short rods	Y

Seismic Interaction Review

19.	Proximate features	Y
20.	Falling hazard	Y
21	Differential displacement	Y
22.	Isolated outliers	Y

Additional Comments:

Photo 61-8

Paul D. Smith/SCE, PE: Paul Smith Date: 10/13/95

Harry Johnson/SCE, PE: [signature] Date: 10/13/95

INDIAN POINT UNIT #3 — Plant Area Summary Sheet (PASS)

Building: PP Elevation: 41'-0" Area: _____

Raceway Designation Number (if applicable): _____

Inclusion Rule Review

1. Cable tray spans . . . . . Y
2. Conduit spans . . . . . Y
3. Tie downs . . . . . Y
4. Channel nuts . . . . . Y
5. Rigid boots . . . . . Y
6. Beam clamps . . . . . Y
7. Cast iron inserts . . . . . Y

Other Seismic Performance Indicators

8. Anchor bolts . . . . . Y
9. Welded connections . . . . . Y
10. Concrete condition . . . . . Y
11. Corrosion . . . . . Y
12. Sagging raceways . . . . . Y
13. Broken or missing components and sharp edges . Y
14. Restraint of cables . . . . . Y
15. Cable fill/ties . . . . . Y
16. Aging of plastic ties . . . . . Y
17. System hardspots . . . . . Y
18. Short rods . . . . . Y

Seismic Interaction Review

19. Proximate features . . . . . Y
20. Falling hazard . . . . . Y
21 Differential displacement . . . . . Y
22. Isolated outliers . . . . . Y

Additional Comments:

Photo 61-10, 11, 12, 13

Paul D. Smith/SCE, PE: Paul Smith Date: 10/13/95

Harry Johnson/SCE, PE: [signature] Date: 10/13/95

INDIAN POINT UNIT #3 **Plant Area Summary Sheet (PASS)**

Building: PP Elevation: 51'-0" Area: _____

Raceway Designation Number (if applicable): _____

Inclusion Rule Review

1. Cable tray spans . . . . . Y
2. Conduit spans . . . . . Y
3. Tie downs . . . . . Y
4. Channel nuts . . . . . Y
5. Rigid boots . . . . . Y
6. Beam clamps . . . . . Y
7. Cast iron inserts . . . . . Y

Other Seismic Performance Indicators

8. Anchor bolts . . . . . Y
9. Welded connections . . . . . Y
10. Concrete condition . . . . . Y
11. Corrosion . . . . . Y
12. Sagging raceways . . . . . Y
13. Broken or missing components and sharp edges . Y
14. Restraint of cables . . . . . Y
15. Cable fill/ties . . . . . Y
16. Aging of plastic ties . . . . . Y
17. System hardspots . . . . . Y
18. Short rods . . . . . Y

Seismic Interaction Review

19. Proximate features . . . . . Y
20. Falling hazard . . . . . Y
21 Differential displacement . . . . . Y
22. Isolated outliers . . . . . Y

Additional Comments:

Photo 61-9

Paul D. Smith/SCE, PE: Paul Smith Date: 10/13/95

Harry Johnson/SCE, PE: Harry Johnson Date: 10/13/95

INDIAN POINT UNIT #3 — Plant Area Summary Sheet (PASS)

Building: IS Elevation: 15'-0" Area: _____

Raceway Designation Number (if applicable): _____

Inclusion Rule Review

1. Cable tray spans . . . . . Y
2. Conduit spans . . . . . Y
3. Tie downs . . . . . Y
4. Channel nuts . . . . . Y
5. Rigid boots . . . . . Y
6. Beam clamps . . . . . Y
7. Cast iron inserts . . . . . Y

Other Seismic Performance Indicators

8. Anchor bolts . . . . . Y
9. Welded connections . . . . . Y
10. Concrete condition . . . . . Y
11. Corrosion . . . . . Y
12. Sagging raceways . . . . . Y
13. Broken or missing components and sharp edges . Y
14. Restraint of cables . . . . . Y
15. Cable fill/ties . . . . . Y
16. Aging of plastic ties . . . . . Y
17. System hardspots . . . . . Y
18. Short rods . . . . . Y

Seismic Interaction Review

19. Proximate features . . . . . Y
20. Falling hazard . . . . . Y
21 Differential displacement . . . . . Y
22. Isolated outliers . . . . . Y

Additional Comments:

Service Water Pump area reviewed & OK

Paul D. Smith/SCE, PE: Paul Smith Date: 10/12/95

Harry Johnson/SCE, PE: [signature] Date: 10/12/95

INDIAN POINT UNIT #3 — Plant Area Summary Sheet (PASS)

Building: PA Elevation: 15'-0" Area: _____

Raceway Designation Number (if applicable): _____

Inclusion Rule Review

1. Cable tray spans . . . . . Y
2. Conduit spans . . . . . Y
3. Tie downs . . . . . Y
4. Channel nuts . . . . . Y
5. Rigid boots . . . . . Y
6. Beam clamps . . . . . Y
7. Cast iron inserts . . . . . Y

Other Seismic Performance Indicators

8. Anchor bolts . . . . . Y
9. Welded connections . . . . . Y
10. Concrete condition . . . . . Y
11. Corrosion . . . . . Y
12. Sagging raceways . . . . . Y
13. Broken or missing components and sharp edges . Y
14. Restraint of cables . . . . . Y
15. Cable fill/ties . . . . . Y
16. Aging of plastic ties . . . . . Y
17. System hardspots . . . . . Y
18. Short rods . . . . . Y

Seismic Interaction Review

19. Proximate features . . . . . Y
20. Falling hazard . . . . . Y
21 Differential displacement . . . . . Y
22. Isolated outliers . . . . . Y

Additional Comments:

Photo 61-17, 18

Paul D. Smith/SCE, PE: Paul Smith Date: 10/13/95

Harry Johnson/SCE, PE: [signature] Date: 10/13/91

INDIAN POINT UNIT #3 **Plant Area Summary Sheet (PASS)**

Building: PA Elevation: 34'-0" Area: _____

Raceway Designation Number (if applicable): _____

Inclusion Rule Review

1. Cable tray spans . . . . . Y
2. Conduit spans . . . . . Y
3. Tie downs . . . . . Y
4. Channel nuts . . . . . Y
5. Rigid boots . . . . . Y
6. Beam clamps . . . . . Y
7. Cast iron inserts . . . . . Y

Other Seismic Performance Indicators

8. Anchor bolts . . . . . Y
9. Welded connections . . . . . Y
10. Concrete condition . . . . . Y
11. Corrosion . . . . . Y
12. Sagging raceways . . . . . Y
13. Broken or missing components and sharp edges . Y
14. Restraint of cables . . . . . Y
15. Cable fill/ties . . . . . Y
16. Aging of plastic ties . . . . . Y
17. System hardspots . . . . . Y
18. Short rods . . . . . Y

Seismic Interaction Review

19. Proximate features . . . . . Y
20. Falling hazard . . . . . Y
21 Differential displacement . . . . . Y
22. Isolated outliers . . . . . Y

Additional Comments:

Paul D. Smith/SCE, PE: Paul Smith Date: 10/13/95

Harry Johnson/SCE, PE: [illegible] Date: 10/13/95

INDIAN POINT UNIT #3 **Plant Area Summary Sheet (PASS)**

Building: PA Elevation: 41'-0" Area: _____

Raceway Designation Number (if applicable): _____

Inclusion Rule Review

1. Cable tray spans . . . . . Y
2. Conduit spans . . . . . Y
3. Tie downs . . . . . Y
4. Channel nuts . . . . . Y
5. Rigid boots . . . . . Y
6. Beam clamps . . . . . Y
7. Cast iron inserts . . . . . Y

Other Seismic Performance Indicators

8. Anchor bolts . . . . . Y
9. Welded connections . . . . . Y
10. Concrete condition . . . . . Y
11. Corrosion . . . . . Y
12. Sagging raceways . . . . . Y
13. Broken or missing components and sharp edges . Y
14. Restraint of cables . . . . . Y
15. Cable fill/ties . . . . . Y
16. Aging of plastic ties . . . . . Y
17. System hardspots . . . . . Y
18. Short rods . . . . . Y

Seismic Interaction Review

19. Proximate features . . . . . Y
20. Falling hazard . . . . . Y
21 Differential displacement . . . . . Y
22. Isolated outliers . . . . . Y

Additional Comments:

Photo 61-15 Photo 61-16

(19) Gas bottle judged not a credible hazard to conduit.

Conduit support over PW-72 has only 1 bolt to ceiling. Discounting this support (conservatively) the distance btw adjacent supports is ok.

Paul D. Smith/SCE, PE: Paul Smith Date: 10/13/95

Harry Johnson/SCE, PE: H. Johnson Date: 10/13/95

INDIAN POINT UNIT #3 **Plant Area Summary Sheet (PASS)**

Building: PA Elevation: 55'-0" Area: _____

Raceway Designation Number (if applicable): _____

Inclusion Rule Review

1. Cable tray spans . . . . . Y
2. Conduit spans . . . . . Y
3. Tie downs . . . . . Y
4. Channel nuts . . . . . Y
5. Rigid boots . . . . . Y
6. Beam clamps . . . . . Y
7. Cast iron inserts . . . . . Y

Other Seismic Performance Indicators

8. Anchor bolts . . . . . Y
9. Welded connections . . . . . Y
10. Concrete condition . . . . . Y
11. Corrosion . . . . . Y
12. Sagging raceways . . . . . Y
13. Broken or missing components and sharp edges . Y
14. Restraint of cables . . . . . Y
15. Cable fill/ties . . . . . Y
16. Aging of plastic ties . . . . . Y
17. System hardspots . . . . . Y
18. Short rods . . . . . Y

Seismic Interaction Review

19. Proximate features . . . . . Y
20. Falling hazard . . . . . Y
21 Differential displacement . . . . . Y
22. Isolated outliers . . . . . Y

Additional Comments:

Photo 61-5,6

Hardware connection at ceiling is typically thru-bolted to vertical Unistrut.

Paul D. Smith/SCE, PE: Paul Smith Date: 10/13/95

Harry Johnson/SCE, PE: [signature] Date: 10/13/95

INDIAN POINT UNIT #3 — Plant Area Summary Sheet (PASS)

Building: PA Elevation: 73'-0" Area: _____

Raceway Designation Number (if applicable): _____

Inclusion Rule Review

1.	Cable tray spans	Y
2.	Conduit spans	Y
3.	Tie downs	Y
4.	Channel nuts	Y
5.	Rigid boots	Y
6.	Beam clamps	Y
7.	Cast iron inserts	Y

Other Seismic Performance Indicators

8.	Anchor bolts	Y
9.	Welded connections	Y
10.	Concrete condition	Y
11.	Corrosion	Y
12.	Sagging raceways	Y
13.	Broken or missing components and sharp edges	Y
14.	Restraint of cables	Y
15.	Cable fill/ties	Y
16.	Aging of plastic ties	Y
17.	System hardspots	Y
18.	Short rods	Y

Seismic Interaction Review

19.	Proximate features	Y
20.	Falling hazard	Y
21	Differential displacement	Y
22.	Isolated outliers	Y

Additional Comments:

Photo 60-7

Some conduit Unistrut on ceiling over CCW Surge Tanks are spacers and not supports. However, spacing between supports is OK.

One Unistrut not in vertical Unistrut over AC-814 installed incorrectly. However, discounting this support, remaining supports are about 10' o/c. Therefore, this is OK. Similar over MW-18-12, & others. OK because of support redund. anal.

Paul D. Smith/SCE, PE: Paul Smith Date: 10/13/95

Harry Johnson/SCE, PE: [signature] Date: 10/13/95

INDIAN POINT UNIT #3 — Plant Area Summary Sheet (PASS)

Building: PA Elevation: 80'-0" Area: _____

Raceway Designation Number (if applicable): _____

Inclusion Rule Review

1. Cable tray spans . . . . . Y
2. Conduit spans . . . . . Y
3. Tie downs . . . . . Y
4. Channel nuts . . . . . Y
5. Rigid boots . . . . . Y
6. Beam clamps . . . . . Y
7. Cast iron inserts . . . . . Y

Other Seismic Performance Indicators

8. Anchor bolts . . . . . Y
9. Welded connections . . . . . Y
10. Concrete condition . . . . . Y
11. Corrosion . . . . . Y
12. Sagging raceways . . . . . Y
13. Broken or missing components and sharp edges . Y
14. Restraint of cables . . . . . Y
15. Cable fill/ties . . . . . Y
16. Aging of plastic ties . . . . . Y
17. System hardspots . . . . . Y
18. Short rods . . . . . Y

Seismic Interaction Review

19. Proximate features . . . . . Y
20. Falling hazard . . . . . Y
21 Differential displacement . . . . . Y
22. Isolated outliers . . . . . Y

Additional Comments:

Platform for CCW Surge Tanks

Paul D. Smith/SCE, PE: Paul Smith Date: 10/13/95

Harry Johnson/SCE, PE: [illegible] Date: 10/13/95

INDIAN POINT UNIT #3 **Plant Area Summary Sheet (PASS)**

Building: TB Elevation: 15'-0" Area: _____

Raceway Designation Number (if applicable): _____

Inclusion Rule Review

1. Cable tray spans . . . . . Y
2. Conduit spans . . . . . Y
3. Tie downs . . . . . Y
4. Channel nuts . . . . . Y
5. Rigid boots . . . . . Y
6. Beam clamps X
7. Cast iron inserts . . . . . Y

Other Seismic Performance Indicators

8. Anchor bolts . . . . . Y
9. Welded connections . . . . . Y
10. Concrete condition . . . . . Y
11. Corrosion . . . . . Y
12. Sagging raceways . . . . . Y
13. Broken or missing components and sharp edges . Y
14. Restraint of cables . . . . . Y
15. Cable fill/ties . . . . . Y
16. Aging of plastic ties . . . . . Y
17. System hardspots . . . . . Y
18. Short rods . . . . . Y

Seismic Interaction Review

19. Proximate features . . . . . Y
20. Falling hazard . . . . . Y
21 Differential displacement . . . . . Y
22. Isolated outliers . . . . . Y

Additional Comments: Photos 60-27, 28, 29, 30, 31, 32, 33, 34, 35

(6) Conduit over MCC32A supported with beam clamps. Judged OK because other supports are close. General construction: many beam clamps, welding to structural steel. Conduit out of MCC-32A & Blowdown Recovery Control Panel has a long run (rod supported) in E-W direction terminating in junction box on outside of turbine bldg. Judged OK.

Paul D. Smith/SCE, PE: Paul Smith Date: 10/12/95

Harry Johnson/SCE, PE: [signature] Date: 10/12/95

APPENDIX F

CABLE TRAY AND CONDUIT RACEWAY LIMITED ANALYTICAL REVIEWS

(LARs)

ATOMETRICS

APPENDIX F

INDIAN PONIT NUCLEAR GENERATING STATION UNIT 3
CABLE TRAY AND CONDUIT RACEWAY
LIMITED ANYLITICAL REVIEWS

ANALYTICAL REVIEW TRACKING SUMMARY

SELECTION No.	BUILDING	ELEVATION	FINAL RESOLUTION	INITIALS/ DATE
LAR 1	ET	34'-0"	Acceptable	10/23/95
LAR 2	ABFP	15'-0"	Acceptable	10/23/95
LAR 3	ABFP	43'-0"	Acceptable	10/23/95
LAR 4	CB	15'-0"	Acceptable	10/23/95
LAR 5	ET	46'-0"	Acceptable	10/23/95
LAR 6	CB	33'-0"	Acceptable	10/23/95
LAR 7	PAB	41'-0"	Acceptable	10/23/95
LAR 8	ET	34'-0"	Acceptable	10/23/95

INDIAN POINT NUCLEAR GENERATING STATION UNIT 3
CABLE TRAY AND CONDUIT RACEWAY
ANALYTICAL REVIEW DATA SHEET

Selection Number: LAR-001

Plant Location: BLDG: Elec Tunnel ELEV: 34'-0"

Description:

This support is rod hung, suported from embedded unistrut channel. See attached sketch.

Reference Calculation: 18904-IP3-SQ014

Additional Notes:

CERTIFICATION: (Signatures of at least two Seismic Capability Engineers are required; one of whom is a licensed professional engineer)

Print Name	Signature	Date
Paul Smith		10/12/95
Mara Lakis	M Lakis	10/20/95

NewYorkPower Authority

Calculation No

Project IP3

Subject A46 PROGRAM AS BUILT
CONDUIT SUPP ELEC TUNNEL El. 34'-0"

Revision

Page 1 of 8

Computed by Date

Checked by Date 10/4/94

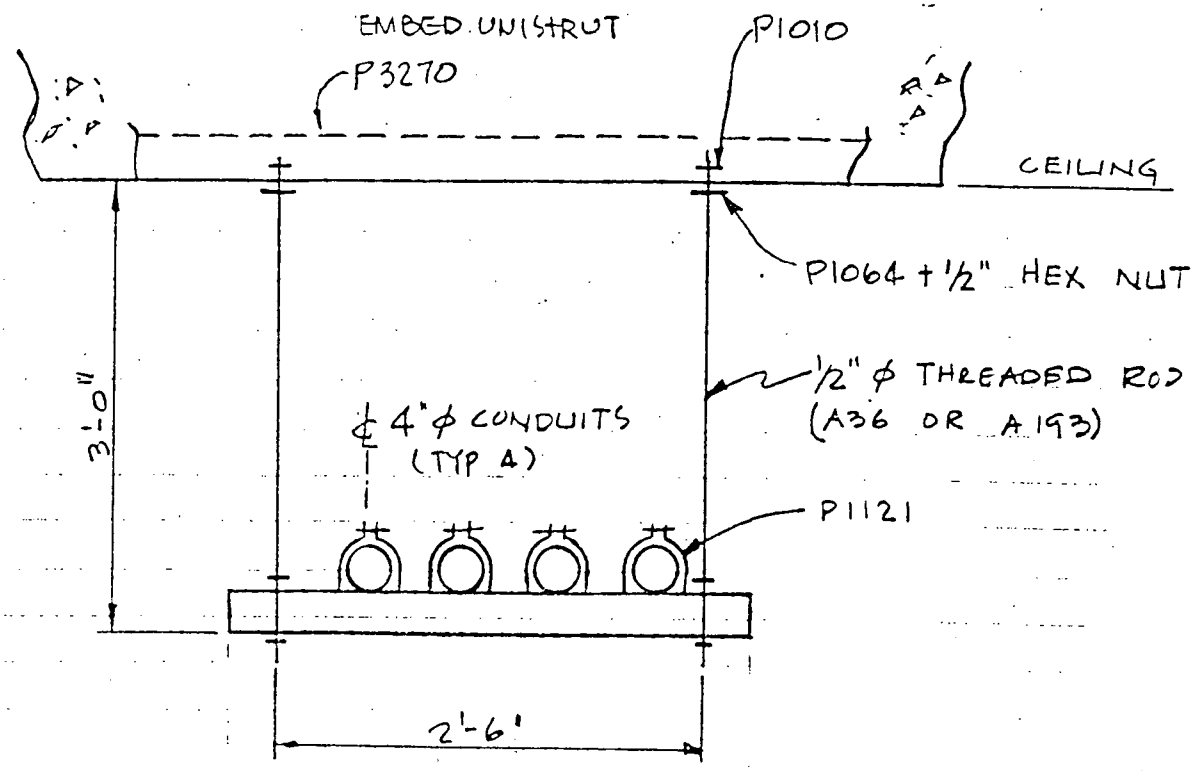

SUPPORT #1 - SECTION

SUPP SPAN = 5'-0"

INDIAN POINT NUCLEAR GENERATING STATION UNIT 3
CABLE TRAY AND CONDUIT RACEWAY
ANALYTICAL REVIEW DATA SHEET

Selection Number: LAR-002

Plant Location: BLDG: ABFP ELEV: 15'-0"

Description:

This support is made up of four (4) 12" trays and one (1) 6" tray mounted on a unistrut channel frame attached to embedded unistrut channel at two (2) locations.

See attached sketch.

Reference Calculation: 18904-IP3-SQ014

Additional Notes:

CERTIFICATION: (Signatures of at least two Seismic Capability Engineers are required; one of whom is a licensed professional engineer)

Print Name	Signature	Date
Paul Smith		10/12/95
Mara Lakis	M Lakis	10/20/95

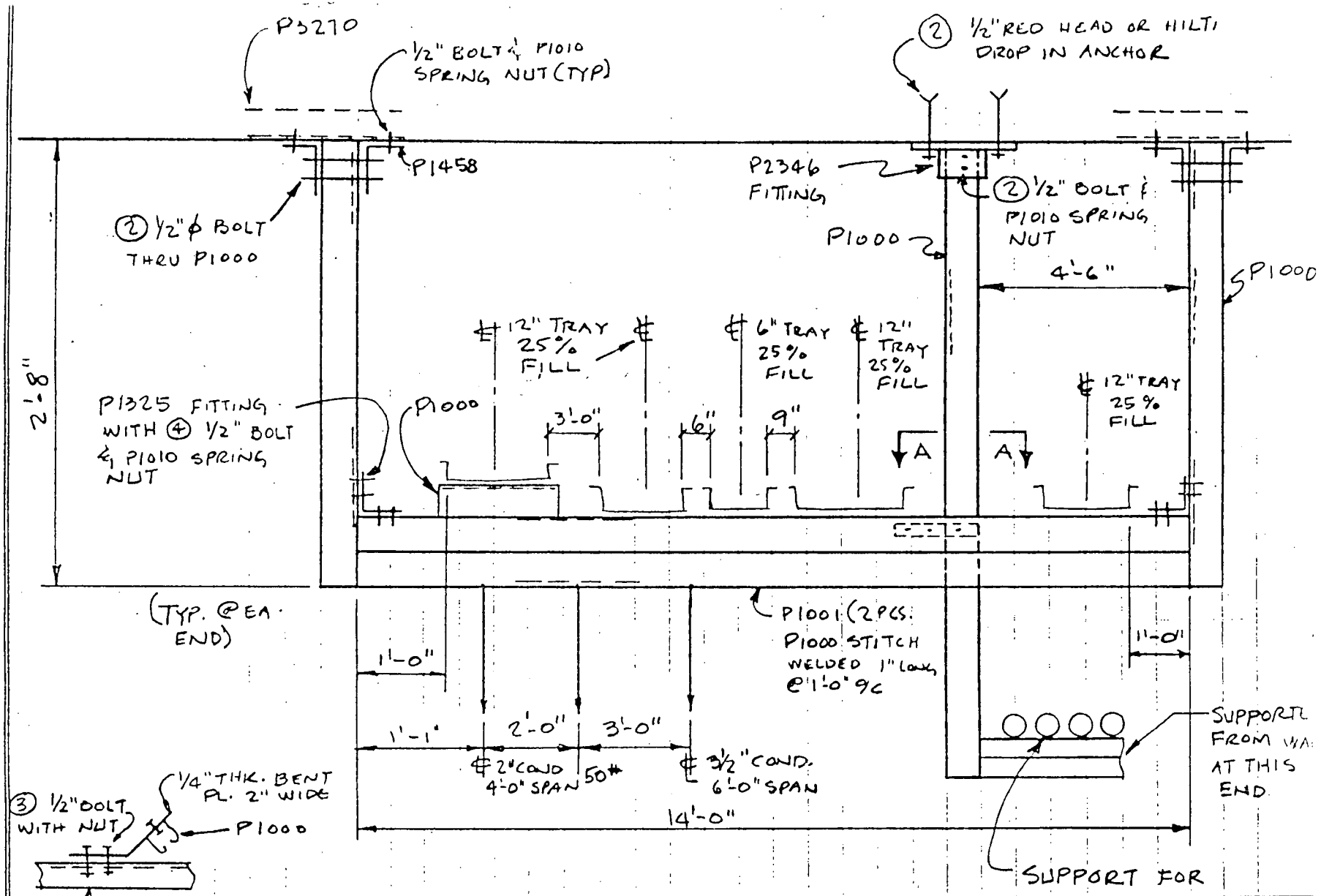

SECTION A-A

SUPP # 2 SECTION VIEW

Calculation No IP3.
Project A40 PE
Subject TRAY SUPPORT ABFP EL 15'-0"
Computed by
Checked by
Date 10/4/92
2 of 8

New York Power Authority

INDIAN POINT NUCLEAR GENERATING STATION UNIT 3
CABLE TRAY AND CONDUIT RACEWAY
ANALYTICAL REVIEW DATA SHEET

Selection Number: LAR-003

Plant Location: BLDG: ABFP ELEV: 43'-0"

Description:

This support is made up of four (4) 4" conduits and one (1) 3-1/2" conduit mounted on a unistrut channel bolted to structural steel at each end (2 locations).

See attached sketch.

Reference Calculation: 18904-IP3-SQ014

Additional Notes:

CERTIFICATION: (Signatures of at least two Seismic Capability Engineers are required; one of whom is a licensed professional engineer)

Print Name	Signature	Date
Paul Smith	Paul Smith	10/12/95
Mara Lakis	M Lakis	10/20/95

NewYorkPower Authority

Calculation No

Project IP3

Subject A46 PROGRAM AS BUILT CONDUIT SUPPORT ABFP EL 43'-0"

Revision

Page 3 of 8

Computed by Date

Checked by Gm Date 10/4/94

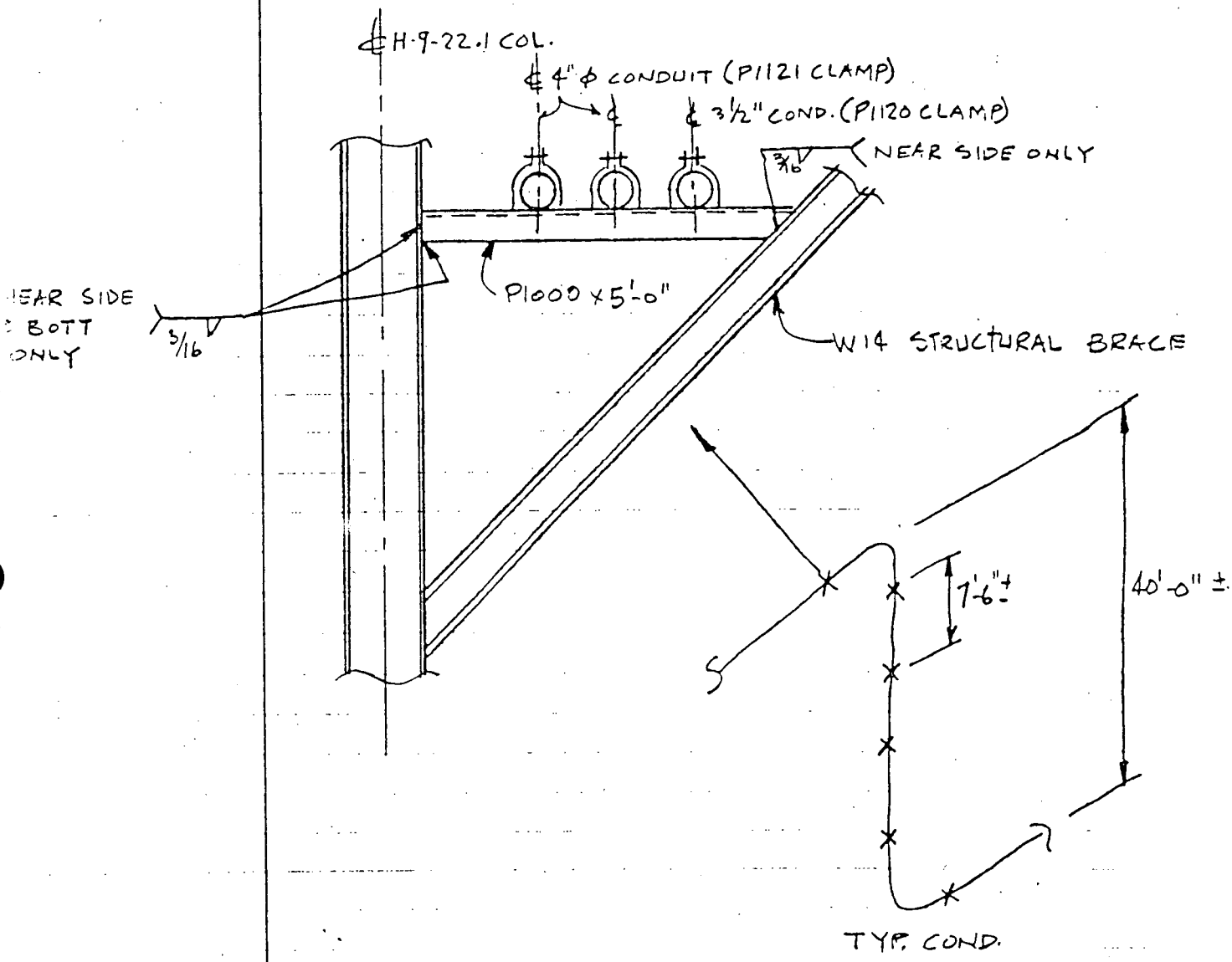

SUPPORT #3 SECTION

INDIAN POINT NUCLEAR GENERATING STATION UNIT 3
CABLE TRAY AND CONDUIT RACEWAY
ANALYTICAL REVIEW DATA SHEET

Selection Number: LAR-004

Plant Location: BLDG: Control (CB) ELEV: 15'-0"

Description:

This support is a trapeeze type made up of five (5) 24" trays mounted on a unistrut channel frame at 12" intervals vertically. Frame is attached to embedded unistrut at two (2) locations.

See attached sketch.

Reference Calculation: 18904-IP3-SQ014

Additional Notes:

CERTIFICATION: (Signatures of at least two Seismic Capability Engineers are required, one of whom is a licensed professional engineer)

Print Name	Signature	Date
Paul Smith		10/12/95
Mara Lakis	M Lakis	10/20/95

NewYorkPower
Authority

Calculation No

Project IP3

Subject A46 PROGRAM AS BUILT
TRAY SUPPORT
CONTROL BLDG EL 15'-0"

Revision

Page 4 of 8

Computed by

Date

Checked by Qm

Date 10/4/84

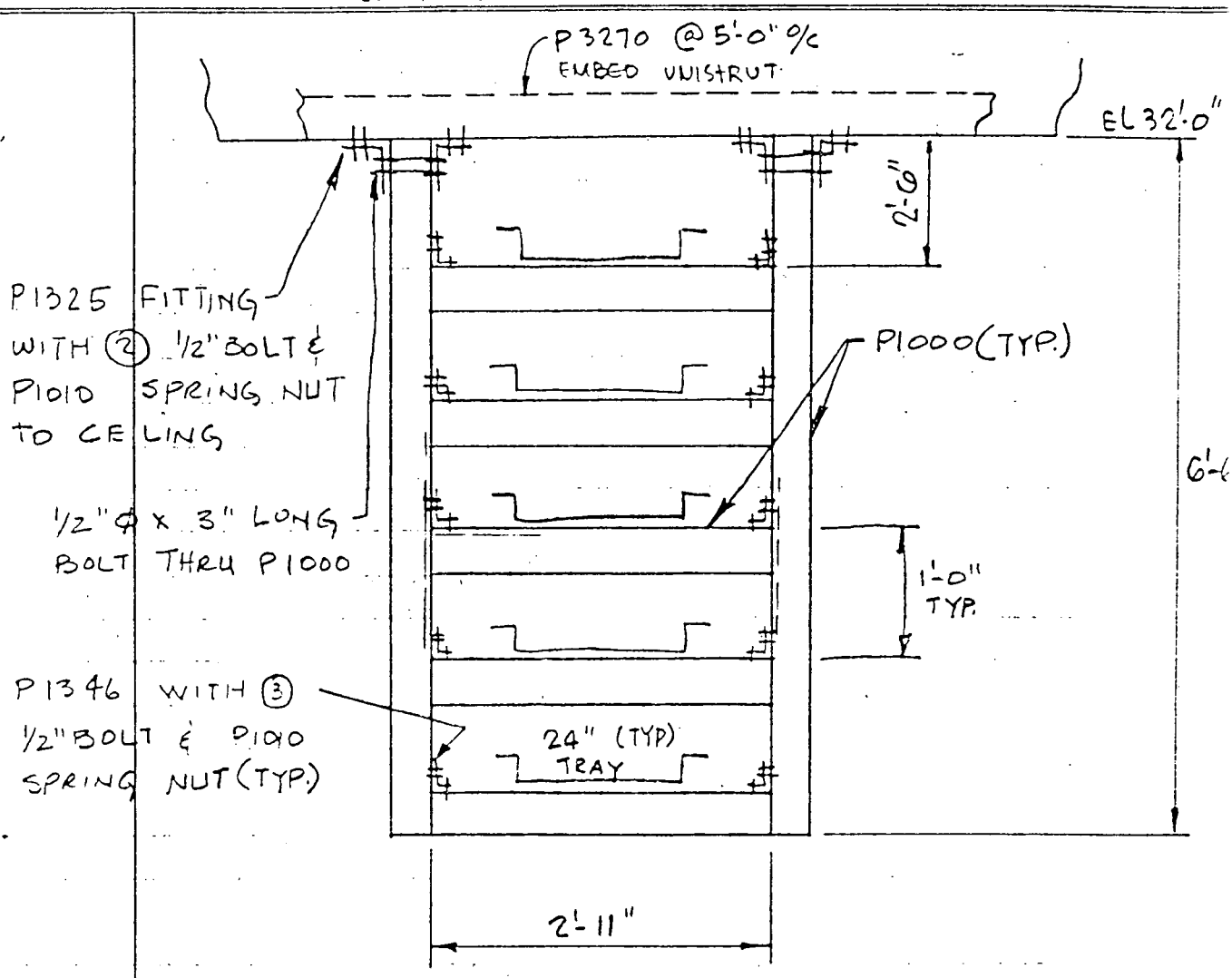

SUPPORT #4 SECTION

SPAN = 5'-0"

INDIAN POINT NUCLEAR GENERATING STATION UNIT 3
CABLE TRAY AND CONDUIT RACEWAY
ANALYTICAL REVIEW DATA SHEET

Selection Number: LAR-005

Plant Location: BLDG: Elec Tunnel ELEV: 46'-0"

Description:

This support is a trapeeze type made up of three (3) 12" trays mounted on a unistrut channel frame at 12" intervals vertically. Frame is attached to embedded unistrut at two (2) locations.

See attached sketch.

Reference Calculation: 18904-IP3-SQ014

Additional Notes:

CERTIFICATION: (Signatures of at least two Seismic Capability Engineers are required; one of whom is a licensed professional engineer)

Print Name	Signature	Date
Paul Smith	PS	10/12/95
Mara Lakis	M Lakis	10/20/95

NewYorkPower Authority

Calculation No

Project IP3

Subject A460 PROGRAM AS BUILT
TRAY SUPPORT
ELECTRICAL TUNNEL EL 46'-0"

Revision

Page 5 of 8

Computed by Date

Checked by Jm Date 10/6/92

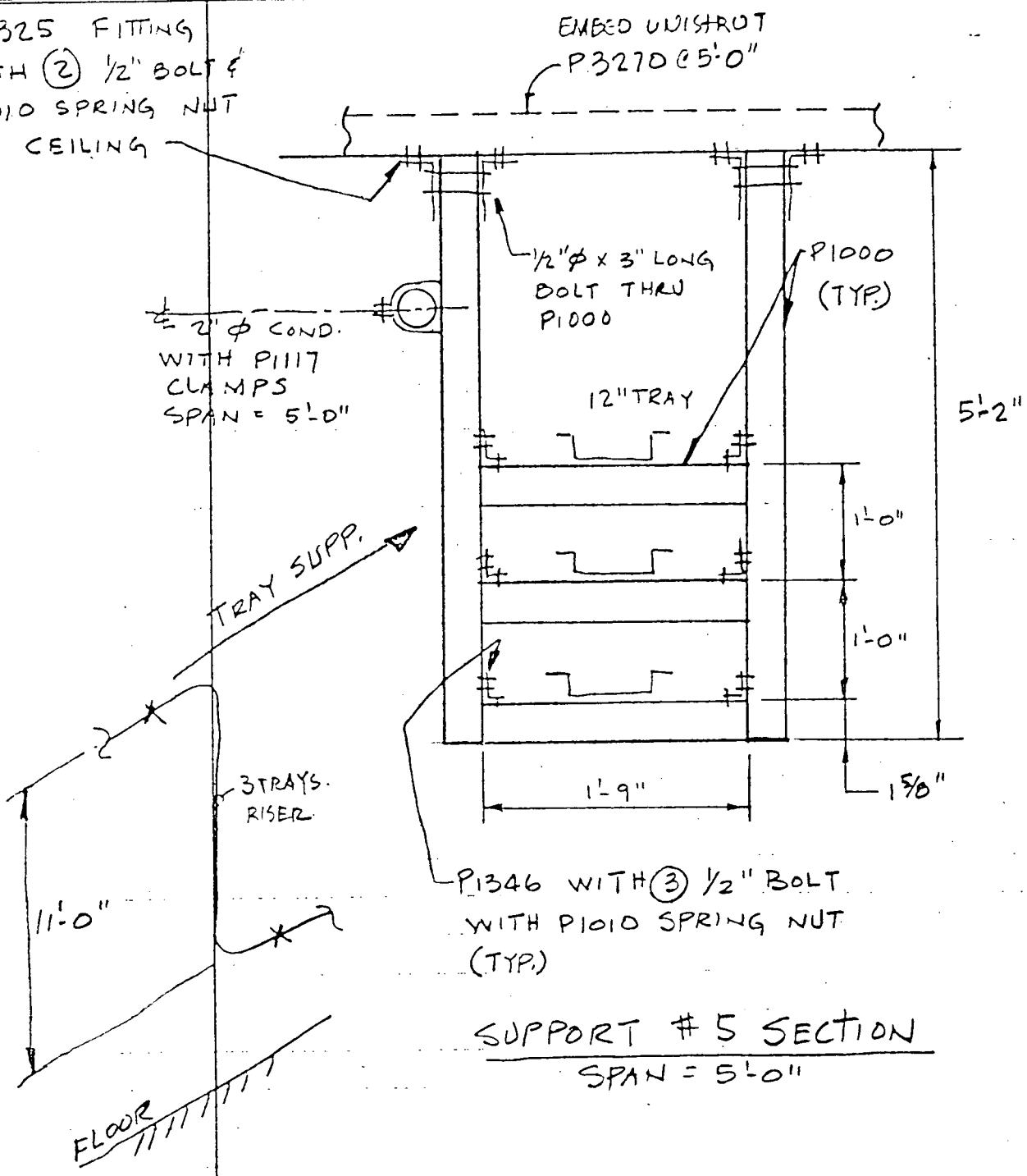

SUPPORT #5 SECTION
SPAN = 5'-0"

INDIAN POINT NUCLEAR GENERATING STATION UNIT 3
CABLE TRAY AND CONDUIT RACEWAY
ANALYTICAL REVIEW DATA SHEET

Selection Number: LAR-006

Plant Location: BLDG: Control (CB) ELEV: 33'-0"

Description:

This support is a trapeeze type made up of seven (7) 24" trays mounted on a unistrut channel frame at 12" intervals vertically. Frame is constructed with double channels on either vertical side which are attached to embedded unistrut. each vertical frame member also has a 4" and a 2" conduit attached to it using a P117 clamp.

See attached sketch.

Reference Calculation: 18904-IP3-SQ014

Additional Notes:

CERTIFICATION: (Signatures of at least two Seismic Capability Engineers are required; one of whom is a licensed professional engineer)

Print Name	Signature	Date
Paul Smith	[signature]	10/12/95
Mara Lakis	M Lakis	10/20/95

NewYorkPower Authority

Calculation No.

Project: IP3

Subject: A46 PROGRAM AS BUILT
TRAY SUPPORT
CONTROL BLDG EL 33'-0"

Revision

Page 6 of 8

Computed by Date

Checked by Date 10/4/91

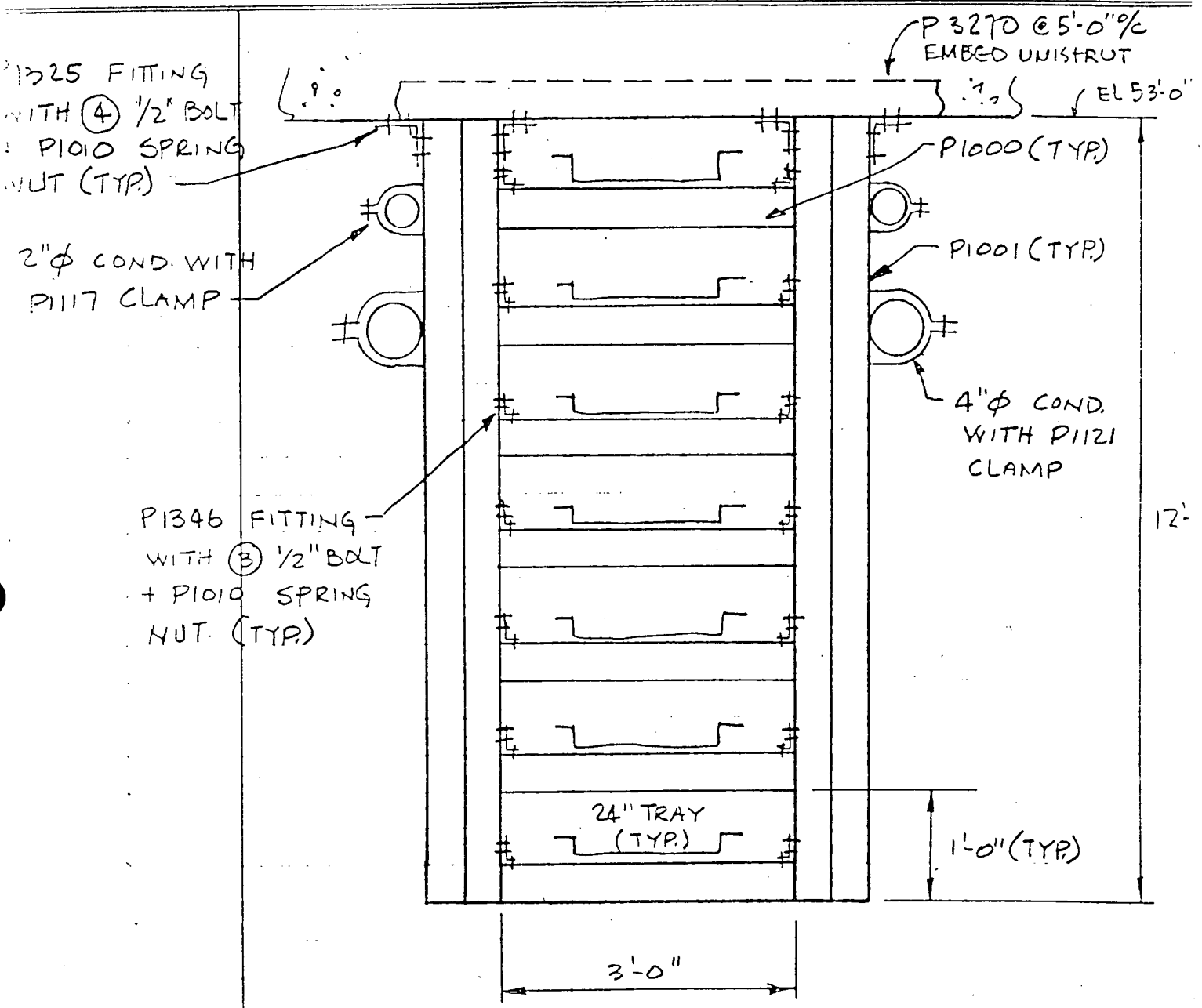

SUPPORT #6 SECTION

5'-0" SPAN (TRAY & CONDUIT)

INDIAN POINT NUCLEAR GENERATING STATION UNIT 3
CABLE TRAY AND CONDUIT RACEWAY
ANALYTICAL REVIEW DATA SHEET

Selection Number: LAR-007

Plant Location: BLDG: PAB ELEV: 41'-0"

Description:

This support is a made up of two (2) 5" conduits and one (1) 3" conduit mounted on a cantilevered unistrut channel. Channel is welded to a 1/2"X4"X8" base plate which is bolted to the wall using 5/8" diameter HILTI bolts.

See attached sketch.

Reference Calculation: 18904-IP3-SQ014

Additional Notes:

CERTIFICATION: (Signatures of at least two Seismic Capability Engineers are required; one of whom is a licensed professional engineer)

Print Name	Signature	Date
Paul Smith	[signature]	10/12/95
Mara Lakis	M Lakis	10/20/95

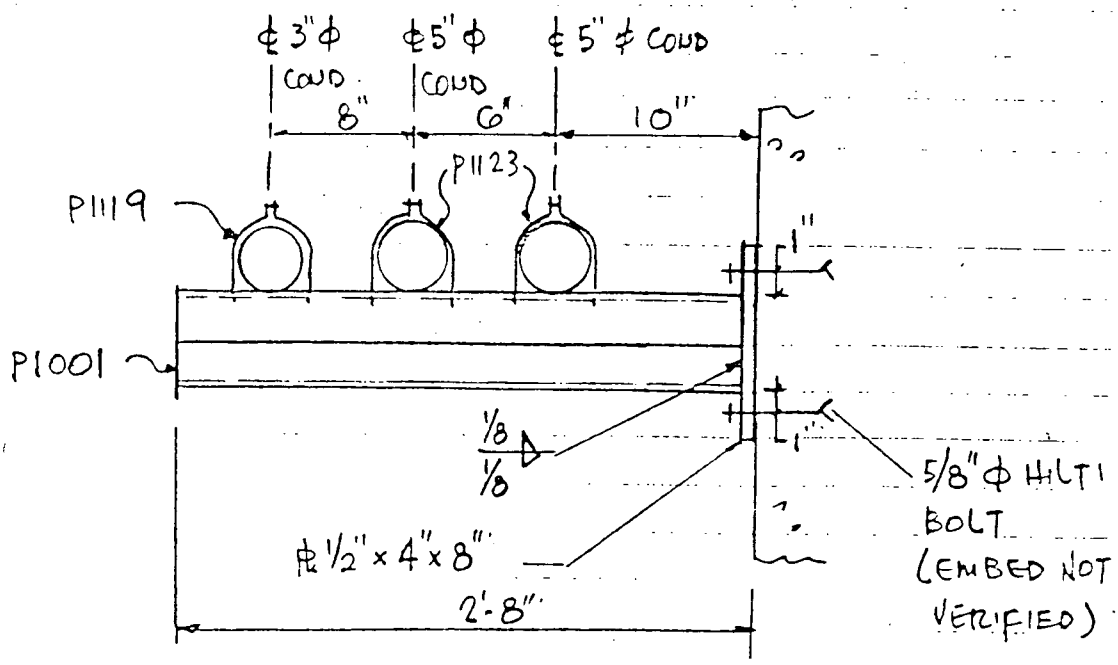

3"φ 5'-0" SPAN
5"φ 12'-0" SPAN
5"φ 12'-0" SPAN

SUPPORT # 7 SECTION

INDIAN POINT NUCLEAR GENERATING STATION UNIT 3
CABLE TRAY AND CONDUIT RACEWAY
ANALYTICAL REVIEW DATA SHEET

Selection Number: LAR-008

Plant Location: BLDG: Elec Tunnel ELEV: 34'-0"

Description:

This support is a made up of one (1) 24" tray mounted on a cantilevered unistrut channel. Channel is attached to a vertically embedded unistrut channel.

See attached sketch.

Reference Calculation: 18904-IP3-SQ014

Additional Notes:

CERTIFICATION: (Signatures of at least two Seismic Capability Engineers are required, one of whom is a licensed professional engineer)

Print Name	Signature	Date
Paul Smith		10/12/95
Mara Lakis	M Lakis	10/20/95

NewYorkPower Authority

Calculation No

Project IP3

Subject A46 PROGRAM AS BUILT TRAY SUPPORT ELEC TUNNEL EL 34'-0"

Revision

Page 8 of 8

Computed by Date

Checked by Dm Date 10/4/91

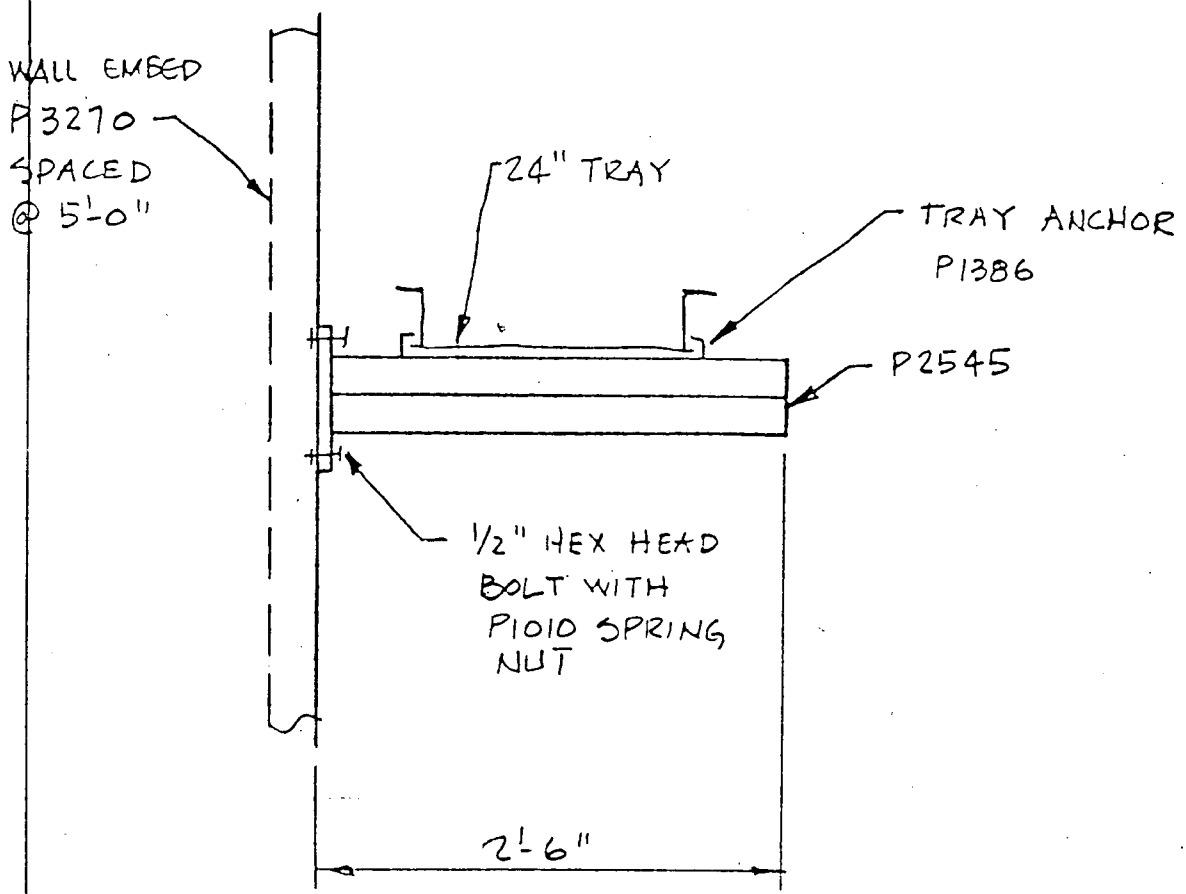

SUPPORT # 8 SECTION

SUPPORT SPAN = 5'-0"

ATOMETRICS

ATOMETRICS CALCULATION COVER SHEET

JO No. 18904-00

CALCULATION No. 18904-IP3-SQ014 REV No. 0

OBJECTIVE TO DOCUMENT THE SEISMIC ADEQUACY REVIEW FOR THE RACEWAY SUPPORTS INSTALLED AT INDIAN POINT 3.

METHOD/ASSUMPTIONS SEE PAGES 7 & 8

REFERENCES SEE PAGE 6

CONCLUSIONS SEE PAGE 24

PREPARER	DIMITRIOS ANTONOPOULOS (PRINT/SIGN)	10/5/95 (DATE)	CLASSIFICATIONS
REVIEWER	ROGER METTHE (PRINT/SIGN)	10/5/95 (DATE)	CONFIRMATION REQ'D? NO
APPROVER	(PRINT/SIGN)	(DATE)	FILE LOCATIONS

CALCULATION REVISION STATUS

REVISION No.	DESCRIPTION OF CHANGE	PREP'D DATE	CHECK'D DATE
0	ORIGINAl ISSUE	SEE COVER SHEET	SEE COVER SHEET

TABLE OF CONTENTS

DESCRIPTION	PAGE
CALCULATIONS COVER SHEET	1
REVISION LOG	2
TABLE OF CONTENTS	3
1.0 INTRODUCTION	4
2.0 PURPOSE/SCOPE	5
3.0 REFERENCE	6
4.0 ASSUMPTIONS	7
5.0 DESIGN INPUT	7
6.0 METHODOLOGY	8
7.0 BODY OF CALCULATION	9 - 23
8.0 RESULTS/CONCLUSION	24

LIST OF ATTACHMENTS

1. FIELD INFORMATION — 24 PAGES

1.0 INTRODUCTION

The Staff of the Seismic Qualification Utility Group (SQUG) and the Nuclear Regulatory Commission issued a Generic Letter 87-02 to provide a detailed approach Verification of Seismic Adequacy of Mechanical and Electrical Equipment in Operating Reactors, Unresolved Safety Issue (USI) A- 46 . New York Power Authority (NYPA) has selected the " Generic Implementation Procedure For Seismic Verification Of Nuclear Planr Equipment" (GIP) , developed by "SQUG" to address the Seismic portion of the A - 46.

The technical approach described in the GIP provides the means to demonstrate that there is adequate seismic capacity of properly anchored equipments in older operating plants.

2.0 PURPOSE / SCOPE

The purpose of this calculation is to document the Seismic Adequacy Review for the Raceway supports installed at Indian Point 3.

This review will be performed in accordance with the GIP methodology.

3.0 REFERENCES

1.0 Generic Implementation Procedure (GIP) for Seismic Verification of Nuclear Plant Equipment . Rev. 2

2.0 Seismic Verification of Nuclear Plant Equipment Anchorage. EPRI NP- 5228-SL, Rev.1, Vol.1, Project 2925-1, Final Report, June 1991.

3.0 Cable Tray and Conduit System Seismic Evaluation Guidelines (SQUG). EPRI NP-7151-D, Project SQ01-1, Final Report, March 1991.

4.0 Unistrut Metal Framing Catalog. No. 12

5.0 Document IP3 - DBD - 318, Rev.0, New York Power Authority, Indian Point Unit No. 3 , Seismic Buildings & Structures.

6.0 Technical Report TR-7366-3 by Teledyne Engineering Services for NYPA. " Digital Data By Period Design Response Spectra Database For Indian Point Unit # 3".

4.0 ASSUMPTIONS

As noted in the body of the Calculation

5.0 DESIGN INPUT

All design input used in this calculation is listed in Attachment 1 and Section 3.0 of this Calculation.

6.0 METHODOLOGY

The selected worst case representative samples of the raceway support systems will be evaluated using the Limited Analytical Review (LAR) process as described in the GIP. The guidelines for this process is provided in Ref. (1) section 8.

7.0 BODY OF THE CALCULATION

THE SEISMIC REVIEW TEAM HAS SELECTED 8 SAMPLES (SEE ATTACH. 1) FOR A LIMITED ANALYTICAL REVIEW. THIS REVIEW WILL BE PERFORMED PER THE GUIDELINES GIVEN IN THE GIP.

UNIT WEIGHTS.

REF. 1 SECTION 8.3.9.

24" TRAYS = 25 psf x 2 = 50 lb/ft

12" TRAYS = 25 lb/ft

6" TRAYS = 12.5 lb/ft

5"Φ CONDUIT = 23 lb/ft

4"Φ CONDUIT = 16.5 lb/ft

3"Φ CONDUIT = 12.8 lb/ft

2"Φ CONDUIT = 5.1 lb/ft

1½"Φ CONDUIT = 3.6 lb/ft

1"Φ CONDUIT. = 2.2 lb/ft

Support 1.

THIS SUPPORT IS ROD HUNG, SUPPORTED FROM EMBEDED UNISTRUT CHANNEL AND HENCE THE ONLY REVIEWS TO BE PERFORMED ARE THE VERTICAL LOAD CHECK & FATIQUE CHECK.

DEAD LOAD ON SUPPORT.

(4) 4"ϕ CONDUITS @ 5' SPAN = 4 x 16.5 x 5 = 330 lbs

ASSUME SUPPORT WT = 50 lbs

∴ TOTAL WT = 380 lbs

VERTICAL LOAD CHECK

THIS CHECK INVOLVES CHECKING THE SUPPORT ANCHORAGE FOR 3 (D.L.) = 3 (380) = 1140 lbs.

THE MOST CRITICAL COMPONENT ON THE SUPPORT ANCHORAGE IS THE EMBED. UNISTRUT P3270

PER REF 4, PAGE 173, THE ALLOWABLE CAPACITY OF P3270 EMB. UNISTRUT IS 2000lbs > 1140lbs

∴ SUPPORT ACCEPTABLE FOR VERTICAL LOAD CHECK.

FATIQUE EVALUATION.

THE SUPPORT IS LOCATED IN ELEC. TUNNEL EL. 34'

PER REF. 6, g_{PEAK} @ ELV. 46'-0 = 0.41g.

CLEAR LENGTH OF ROD = 2'-6" (APPROX.)

PER FIG. 8.12 OF REF 1, FOR 0.5g AND 2'-6" ROD LENGTH, THE MAXIMUM ACCEPTABE WT. IS 2.3 Kips > 1.14 Kips REQUIRED

∴ SUPPORT IS QUALIFIED PER THE LAR REVIEW.

Support 2.

DEAD LOAD ON SUPPORT
(TRAYS ASSUMED 100% FILL)

12" TRAY (5'+5'+4'+4') SPAN	= 25 (18)	= 450 lbs
6" TRAY, 6' SPAN	= 12.5 (6)	= 75 lbs
2"φ COND, 4' SPAN	= 5.1 (4)	= 20.4 lbs
LUMPED LOAD	=	= 50 lbs
4"φ COND, 6' SPAN	= 16.5 (6)	= 99.0 lbs
3-4"φ COND, 3' SPAN	= 3 (16.5)(3)	= 148.5 lbs
2"φ COND, 3' SPAN	= 5.1 (3)	= 15.3 lbs
1½"φ COND, 3' SPAN	= 3.6 (3)	= 10.8 lbs
1"φ COND, 3' SPAN	= 2.2 (3)	= 6.6 lbs
SUPPORT SELF WT		= 100 lbs.
TOTAL D.L =		975

PER REVIEW OF END CONNECTIONS OF THIS SUPPORT DETAIL THE TWO END CONNECTIONS (A) & (C) (REF ATT. 1 pg. 15) ARE CONSIDERED TO BE DUCTILE CONNECTIONS WHILE THE MIDDLE END CONNECTION (B) IS CONSIDERED TO BE NON-DUCTILE. ALSO, IT IS SEEN THAT THERE IS A LATERAL SUPPORT TO THE WALL.

DURING A SEISMIC EVENT, THE LATERAL CONNECTION & THE MIDDLE END CONNECTION, (B). PREVENTS THE SUPPORT TO SWING LATERALLY, BUT IF THESE SUPPORTING DETAILS FAIL, THE SUPPORT WILL BEHAVE IN A DUCTILE MODE.

HENCE THE ONLY LAR CHECK TO BE PERFORMED ON THE SUPPORT IS THE VERTICAL LOAD CHECK. NOTE THAT THE DEAD LOAD CHECK IS ACCEPTABLE PER REVIEW OF THE SUPPORT CONFIGURATION.

VERTICAL LOAD CHECK

VERTICAL LOAD = 3(D.L.) = 3(975) = 2925 lbs.

CONSERVATIVELY IGNORE THE MIDDLE END CONN. (B) AND SINCE THE LOAD IS APPROXIMATELY DISTRIBUTED EVENLY THROUGHOUT THE 14' OF SUPPORT WIDTH,

LOAD @ EACH END CONN. = 2925/2 = 1463 lbs

CAPACITY OF EMB. UNISTRUT P3270 = 2000 lbs/ft
> 1463 lbs ∴ OK.

ALLOWABLE PULL-OUT STRENGTH FOR ½"φ BOLT
= 2000 lbs REF. 4 PAGE 69
> $\frac{1463}{2}$ = 732 lbs.

SHEAR CAPACITY = 0.126 (9,000) = 1134 lbs > 732 lbs
∴ OK.

HENCE THE SUPPORT IS ACCEPTABLE PER THE LAR REVIEW.

Support 3

PER REVIEW OF THE SUPPORT CONFIGURATION THE ONLY LOAD CHECK TO BE PERFORMED IS THE DEAD LOAD CHECK.

DEAD LOAD ON SUPPORT.

PER ATTACH. 1 EFFECTIVE SPAN, { HORIZONTAL SPAN IS 8'-0" MAX ℄'
VERTICAL SPAN IS 20'-0"
CONS. USE VERT. SPAN OF 40'

(2) 4"φ CONDUIT @ 40' = 2 × 16.5 × 40 = 1320 lbs
(1) 3"φ CONDUIT @ 40' = 1 × 12.8 × 40 = 512 lbs
ASSUME SPT WT = 10 lbs
∴ TOTAL WT. 1842 lbs.

CHECK WELD DETAIL.

TOTAL WELD LENGTH = (2)(1.625)'+ √2 (1.625) = 5.5"

CAPACITY OF 3/16" WELD 5½" LONG. = (0.3)(70,000)(0.707)(3/16)(5.5)
= 15,310 lbs >> 1842 lbs

∴ WELDS ARE ACCEPTABLE AND HENCE SUPPORT IS ACCEPTABLE PER LAR REVIEW.

Supports ④ & ⑤

PER REVIEW OF THE SUPPORT CONFIGURATION & LOADING OF SUPPORTS ④ & ⑤, THE WORST CASE SUPPORT IS SPT ④ AND HENCE THE REVIEW OF SPT. ④ WILL ENVELOPE SPT. ⑤ ALSO.

DEAD LOAD ON SUPPORT

(5) 24" TRAYS @ 5' SPAN = 50 X 5 X 5	= 1250 lbs
SUPPORT SELF WT	= 75 lbs
TOTAL DEAD LOAD	1325 lbs

PER REVIEW OF THE SUPPORT CONFIGURATION, IT IS SEEN THAT THE SUPPORT HAS A DUCTILE CONFIGURATION. HENCE THE ONLY CHECK TO BE PERFORMED FOR THE LAR REVIEW IS THE VERTICAL LOAD CHECK. THIS VERTICAL LOAD CHECK WILL ENVELOPE THE DEAD LOAD CHECK.

VERTICAL LOAD CHECK

3 (D.L) = 3 (1325) = 3975 lb.

∴ LOAD @ EACH ATTACH. POINT = 3975/2 = 1988 lbs

CAPACITY OF P3270 EMB. UNISTRUT = 2000 lbs > 1988 lbs

∴ EMB. UNISTRUT IS ACCEPTABLE

TENSION LOAD ON 1/2" ϕ BOLT = $\frac{1988}{4}$ = 497 lbs < 2000 lbs

SHEAR LOAD ON 1/2" ϕ BOLT = $\frac{1988}{2}$ = 994 lbs < 1134 lbs

HENCE THE SUPPORT IS ACCEPTABLE FOR VERTICAL LOAD CHECK AND FOR THE LAR REVIEW.

Support (6)

PER REVIEW OF THE SUPPORT CONFIGURATION, IT IS SEEN THAT THE SUPPORT HAS A DUCTILE CONFIGURATION. THEREFORE THE ONLY CHECK TO BE PERFORMED IS THE VERTICAL LOAD CHECK. PER REVIEW OF THE SUPPORT CONFIGURATION, THE DEAD LOAD CHECK WILL NOT GOVERN.

DEAD LOAD ON SUPPORT

(7) 24" TRAYS @ 5' SPAN = 50x5x7 = 1750 lbs
(2) 4"φ CONDUIT @ 5' SPAN = 16.5x5x2 = 165 lbs
(2) 2"φ CONDUIT @ 5' SPAN = 5.1x5x2 = 51 lbs
SPT. WT = 100 lbs

TOTAL DEAD LOAD 2066 lbs

VERTICAL LOAD CHECK

3 (D.L.) = 3 (2066) = 6198 lbs

∴ LOAD @ EACH SPT. POINT = 3099 lbs

CAPACITY OF P3270 EMB. UNISTRUT = 2000 lbs (REF. 4.0) < 3099 lbs

∴ NO GOOD.

TRY WITH REDUCED FILL ON C.T.

WITH 58% FILL ON C.T. TOTAL D.L =

2066 − 1750(1 − 0.58) = 1331 lbs.

∴ LOAD @ EACH SPT. POINT = $\frac{(3)1331}{2}$ = 1997 lbs

< CAPACITY OF 2000 lbs ∴ OK.

THE ½"Φ BOLTS ARE ACCEPTABLE BY COMPARISON TO THE QUALIFICATION OF SPTS. 4 & 5

HENCE SPT 6 IS ACCEPTABLE PER LAR REVIEW FOR 58% FILL ON CABLE TRAYS.

Support (7)

PER REVIEW OF THE SUPPORT CONFIGURATION, THE ONLY CHECK TO BE PERFORMED PER THE LAR IS THE DEAD LOAD CHECK.

DEAD LOAD ON SUPPORT

(2) 5"ϕ CONDUIT @ 12' SPAN = $\overbrace{23 \times 12}^{276} \times 2 = 552$ lb

(1) 3"ϕ CONDUIT @ 5' SPAN = $12.8 \times 5 = 64$ lbs

SPT. WT (CONS.) = 25 lbs

∴ TOTAL DEAD LOAD 641 lbs

PER REVIEW OF THE SUPPORT CONFIGURATION, THE CRITICAL COMPONENTS TO BE EVALUATED ARE THE 5/8"ϕ HILTI BOLTS ...

MAX MOMENT @ HKB'S $= 64(24) + 276(16) + 276(10) + 25(16) = 9112$ lb-in

∴ TENSION ON EACH BOLT $= \dfrac{9112}{(3.25+2)} = 1736$ lbs

$f'c = 3000$ psi (Ref. 5).

CAPACITY OF 5/8" HKB = 3.17 Kips (Ref: 1)

REDUCTION FOR $f'c = 3000/4000 = 0.75$

REDUCTION FOR SPACING $= 5.25/6.25 = 0.84$

REDUCED CAPACITY $= 3.17(0.75)(0.84) = 1.99$ Kips

> 1.74 Kips LOAD.

HENCE THE ANCHORS ARE ACCEPTABLE, AND THE SUPPORT IS ACCEPTABLE PER LAR.

Support (8)

THE ONLY CHECK TO BE PERFORMED FOR THIS SPT. IS THE DEAD LOAD CHECK - PER REVIEW OF THE SUPPORT CONFIGURATION.

DEAD LOAD ON SPT.

(1) 24" TRAY @ 5' SPAN = 50 X 5 = 250 lbs.
SPT. WT (CONS.) = 25 lbs
275 lbs.

THE CRITICAL COMPONENTS TO BE EVALUATED ARE THE 1/2" Φ HEX. HEAD BOLT & THE EMB. UNISTRUT P3270.

MAX. MOMENT @ ANCHORAGE = 275 X 30
= 8250 lb-in

TENSION ON BOLT = 8250 / 4.625" = 1784 lb.
REF. 4

CAPACITY OF P3270 = 2000 lbs > 1784 lbs
PULLOUT STRENGTH OF 1/2" BOLTS = 2000 lbs > 1784 lbs

RESISTENCE TO SLIPPAGE = 1500 lbs > $\frac{275}{2}$ = 137.5 lbs

HENCE THE SUPPORT IS ACCEPTABLE FOR D.L. CHECK & LAR.

CONCLUSION.

SEVEN OF THE EIGHT SAMPLE SUPPORTS ARE SHOWN TO BE ACCEPTABLE WHILE SUPPORT NO. 6 IS ACCEPTABLE WITH A MAX. OF 58% CABLE FILL ON THE (7) SEVEN 24" CABLE TRAYS.

ATTACHMENT 1

(FIELD INFORMATION)

ATOMETRICS

FAX TRANSMITTAL

DATE: 8/19/94

OF PAGES 8
(includes fax cover sheet)

TO: Aziz Saber
Vectra

FAX #: (508) 370-3223

FROM: Paul Lang (at Indian Point 3)

TEL NO.: (914) ~~352-4040~~ 734-6023

MESSAGE: These are the cable tray sketches.
If you have any questions, please call.
Regards,
Paul

CALCULATION NO.
REVISION NO. 0
ATTACHMENT NO. 1
SHEET NO. 2 OF 24

*NOTE: SEE PAGE 14 OF THIS ATTACHMENT FOL CONDUIT SIZE AND SUPPORT SPAN.

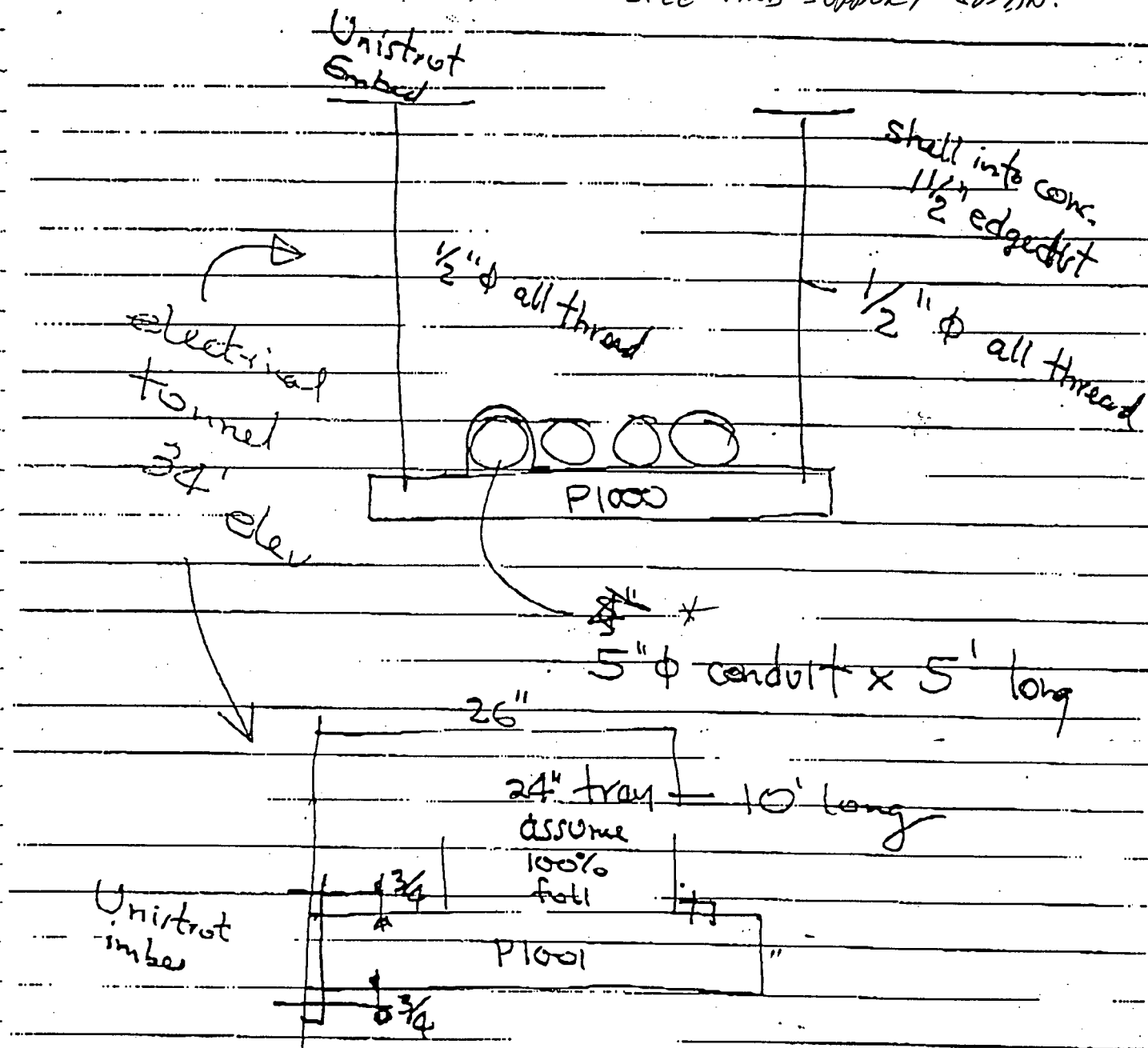

CALCULATION NO.

REVISION NO. 0

ATTACHMENT NO. 1

SHEET NO. 3 OF 24

8/12/94 2/

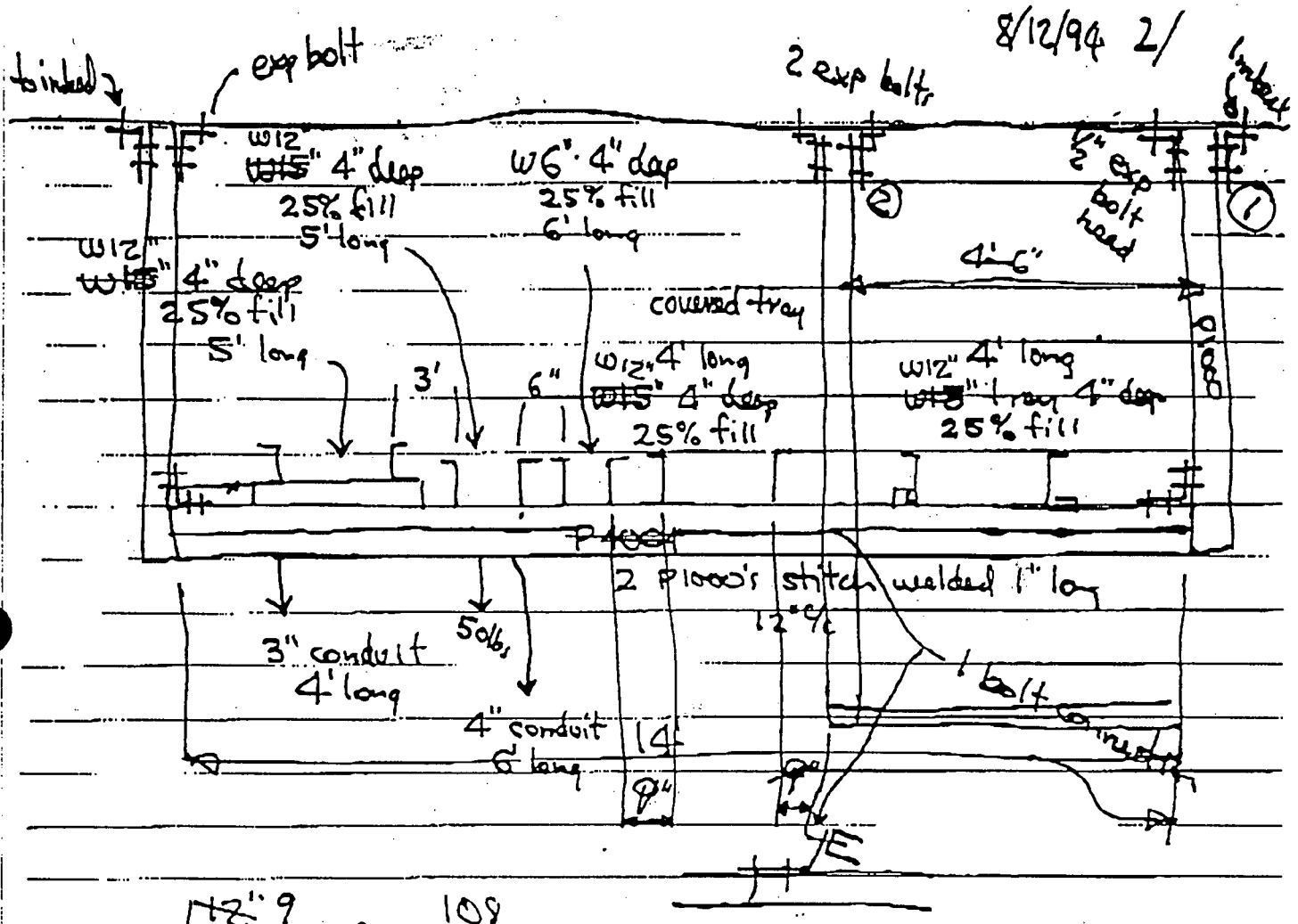

27	~~12~~ 9 / ~~15~~ 12	21	108 / 6	114
45				
18	~~12~~ 9 / 6	15		
21	~~6~~ 5 / ~~15~~ 12	17	36 / 65	101
72				
51	36 / ~~15~~ 12	48		
117				

additional wt on (2)

3 - 3½ conduit		3'-0"
1 - 2"	"	3'-0"
1 - 1½"	"	3'-0"
1 - 1"	"	3'-0"

AFW Pump Room 15' elev.

CALCULATION NO.

REVISION NO. 0

ATTACHMENT NO. 1

SHEET NO. 4 OF 24

3/

AB Bldg - 43' El Near colomn H2 5 conduit supports supported by friction

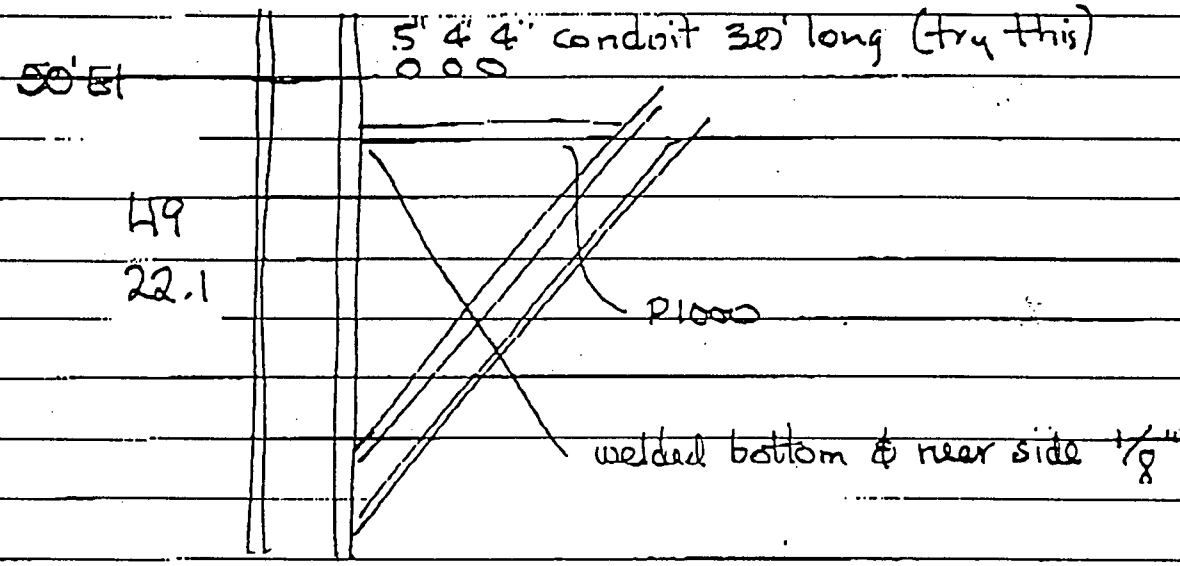

4/

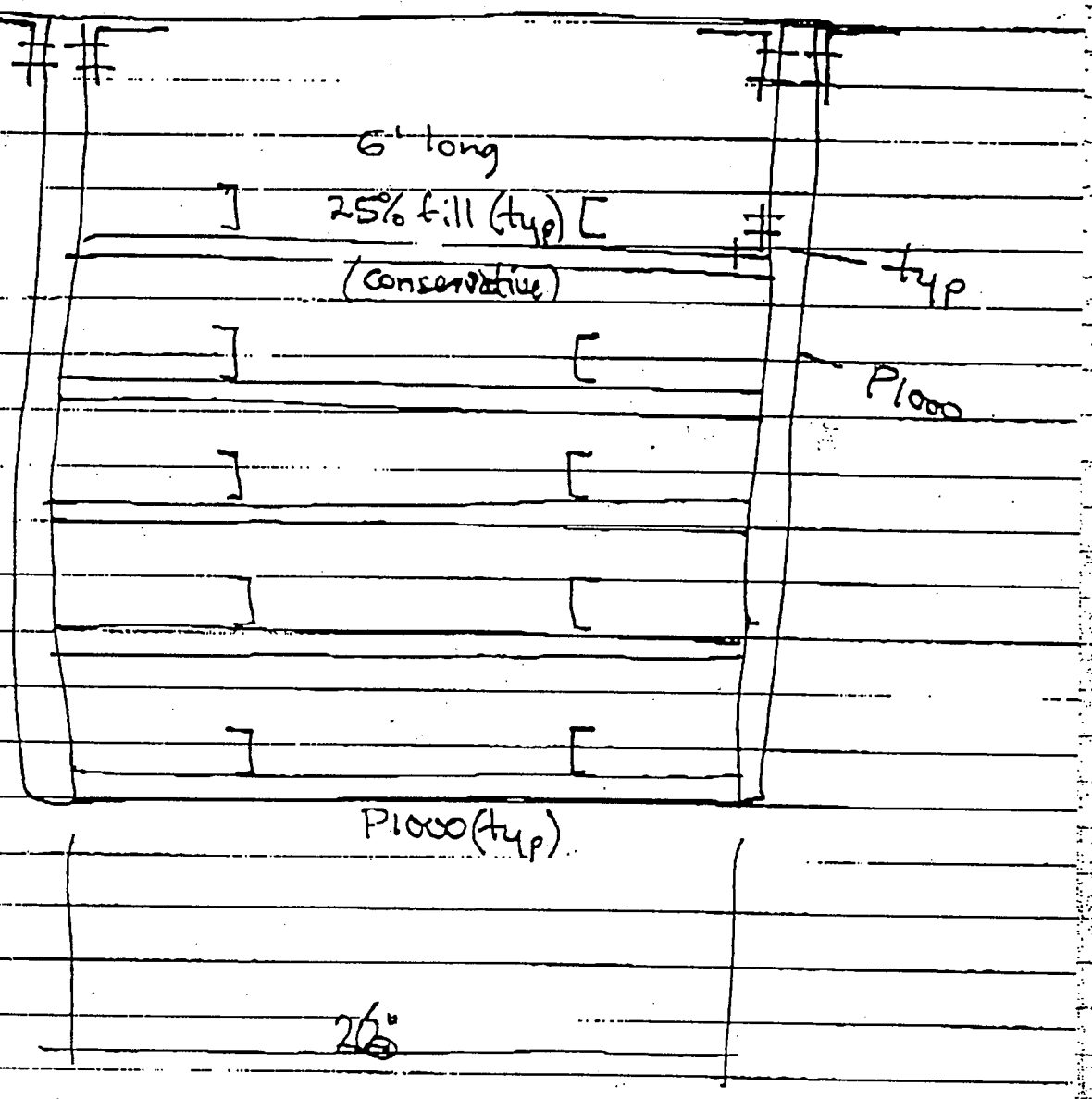

In Inst Air Room
Near 31 IA Comp

CALCULATION NO.
REVISION NO. 0
ATTACHMENT NO. 1
SHEET NO. 6 OF 21

51

Electrical tunnels ~~33'~~ 46'

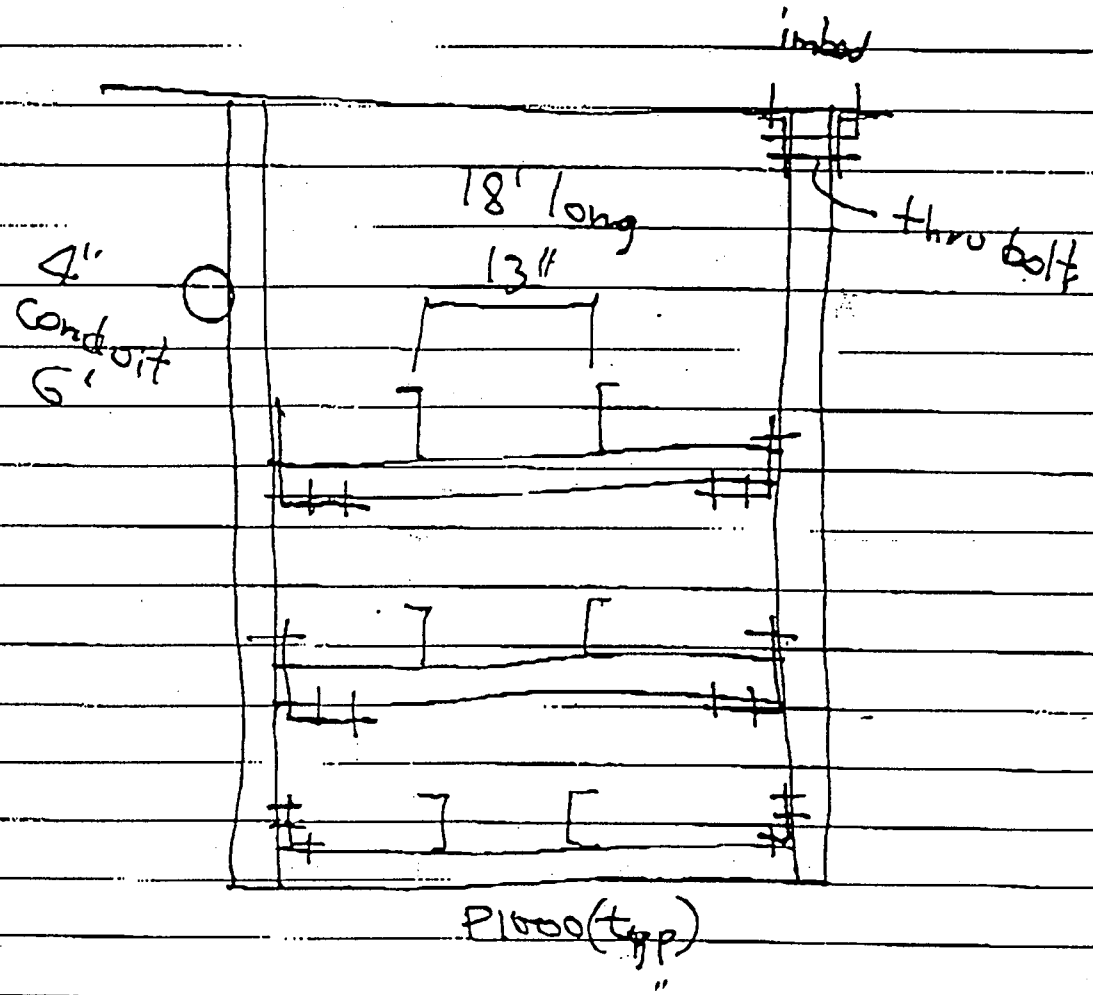

6/

Switchgear Room 33' Control bldg

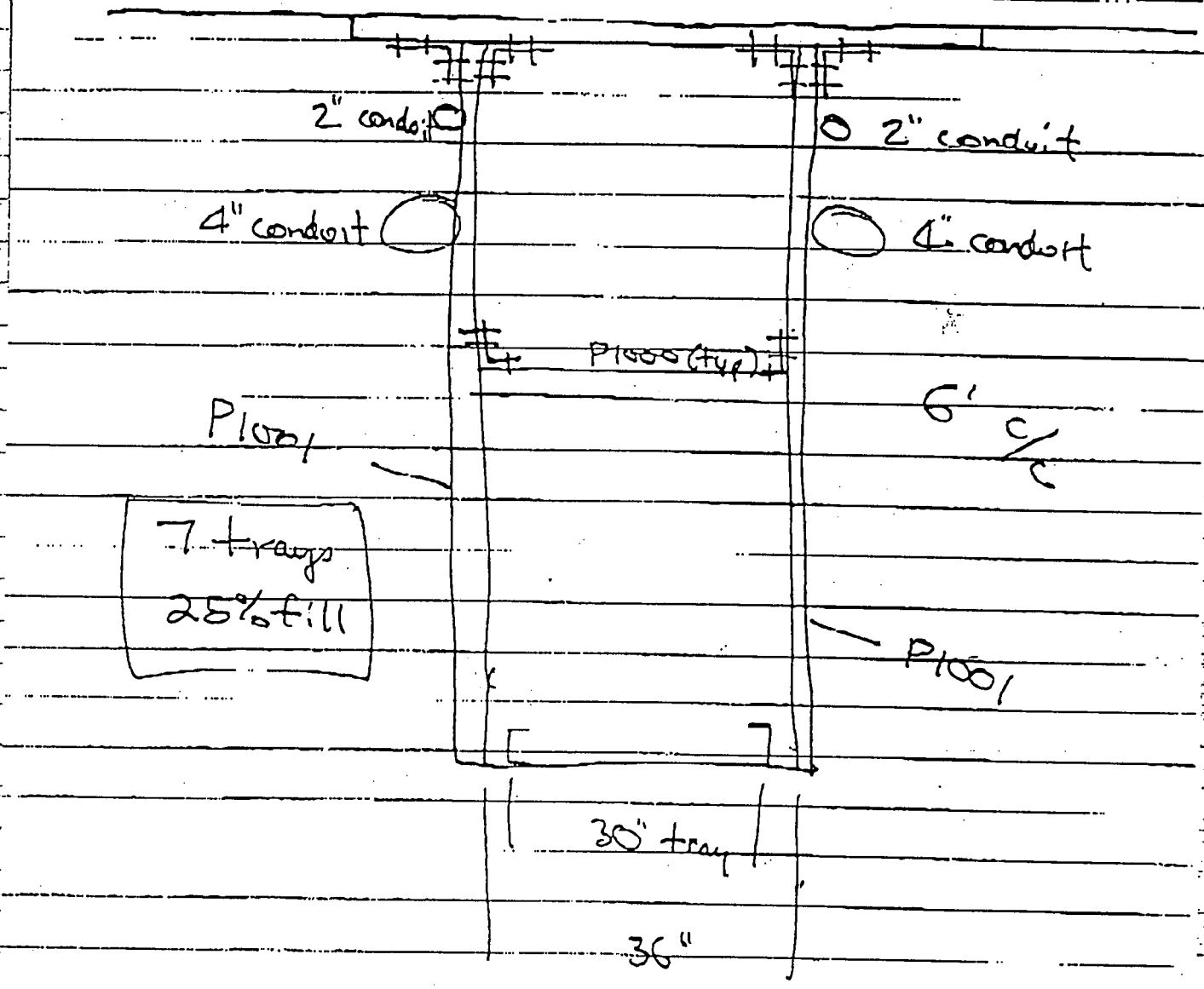

7/

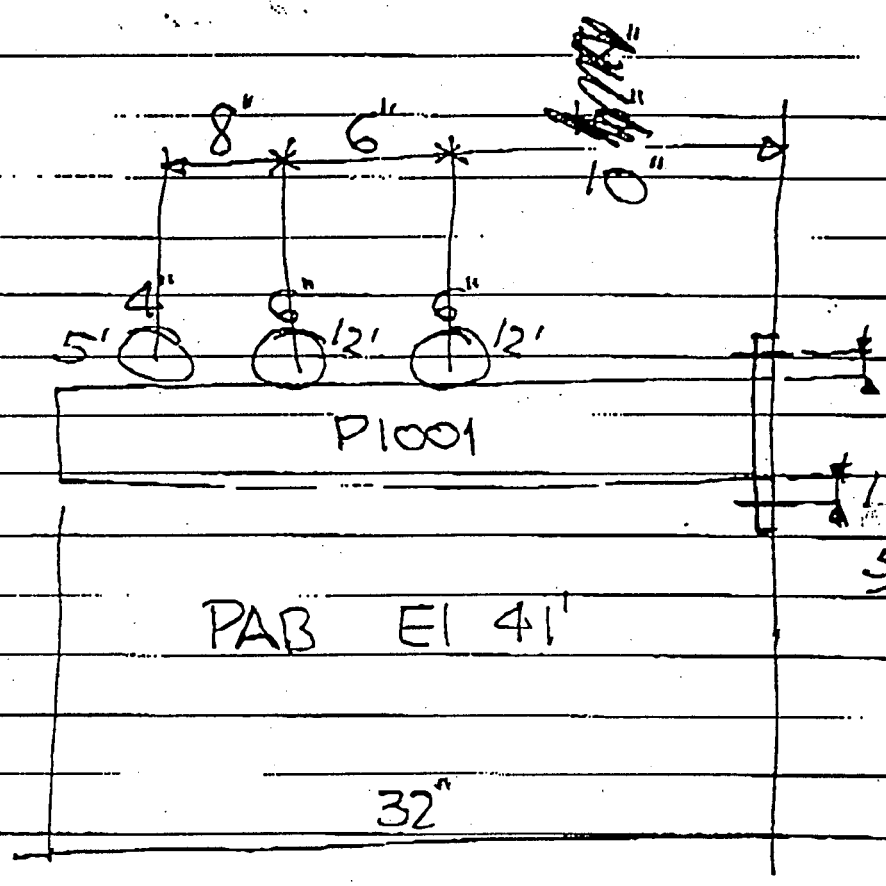

CALCULATION NO. _____

REVISION NO. 0

ATTACHMENT NO. 1

SHEET NO. 9 OF 24

INFORMATION NEEDED FOR RACEWAY ANALYSIS

RESPONSE	
(NOT AVAILABLE).	1. NEED PHOTO PICTURES OF ALL SUPPORTS.
SEE APPROPIATE PART NUMBER IDENTIFIED ON SUPPORT SKETCHES.	2. FOR ALL CLIP ANGLE ANCHORAGE, NEED FOLLOWING INFO. AT CEILING ONLY 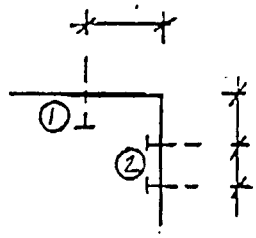 ① ANCHORAGE BOLT TYPE, SIZE & NUMBER ② BOLT TYPE & SIZE ③ CLIP ANGLE TYPE & SIZE ④ DIMENSIONS AS MARKED.
DWGS ARE NOT AVAILABLE. EMBED UNISTRUT ARE SHOWN ON CALC DWG.	3. ANY DWGS AVAILABLE ON THESE SUPPORTS AND OR ON THE EMBEDED UNISTRUTS TO WHICH THE SUPPORTS ARE ATTACHED.
SEE APPROPIATE PARTS IDENTIFIED ON SKETCHES.	4. ANY OF THE CLIP ANGLE DETAIL, BOOT CONNECTIONS ?

CALCULATION NO. _____
REVISION NO. 0
ATTACHMENT NO. 1
SHEET NO. 10 OF 24

OTHER INFO. FOR EACH SUPPORT

RESPONSE	
	SPT. 1
COMPLETED SEE SUPP #1.	1. DIMENSIONS AS MARKED
SEE SUPP #1	2. UNSUPPORTED LENGTH OF 1/2"Φ THREAD ROD.
CAN BE EITHER A36 OR A193 IP3 HAS USED A193 FOR MANY CASES.	3. THREADED ROD MANUFACTURED OR FIELD FABRICATED
CONDUITS ARE CONNECTED WITH COUPLERS.	4. FITTINGS ON CONDUIT SPANS.
	CALCULATION NO. ____ REVISION NO. 0 ATTACHMENT NO. 1 SHEET NO. 11 OF 24
	SPT. 8
ATTACHED TO EMBED UNISTRUT SEE SUPP #8	1. SPT. ATTACHED TO CONCRETE OR EMB. UNISTRUT?
1/2" HH BOLT.	2. ANCHORAGE SIZE, TYPE
TRAY @ 12" ABOVE & BELOW.	3. OTHER LOADS ON EMB. UNISTRUT?
	SPT. 2
COMPLETED	1. INFORMATION AS MARKED ON THE SKETCH
SEE APPROPIATE PARTS SHOWN ON SUPP #2	2. CLIP ANGLE DETAIL AT EACH ANCHORAGE LOCATION.
SEE SUPP #2.	3. FITTINGS ON CONDUITS.

RESPONSE		
WITH 16" NONE TRAY SUPPORT of #2	AREA EXCEPT	SPT. 2 4. ANY OTHER LOADINGS ON THE EMBED. UNISTRUTS TO WHICH THE SUPPORT IS ATTACHED.
Completed SEE SUPP #3		SPT. 3 1. NEED MORE CLARIFICATION AS MARKED
CONDUITS ARE CONNECTED WITH COUPLERS.		2. ANY FITTINGS ON CONDUIT SPAN?
SEE SUPP # 4		CALCULATION NO. ____ REVISION NO. 0 ATTACHMENT NO. 1 SHEET NO. 12 OF 24 SPT. 4 1. NEED CLIP ANGE DETAIL
SEE SUPP #4		2. DIMENSIONS AS MARKED.
SEE SUPP #5		SPT. 5 1. NEED ANCHORAGE DETAILS.
SEE SUPP #5		2. NEED DIMENSIONS AS MARKED
CONDUITS ARE CONNECTED WITH COUPLER.		3. ANY FITTINGS ON CONDUITS.

4 OF 10

RESPONSE	
	SPT. 6
SEE SUPP #6	1. NEED DIMENSIONS AS MARKED
SEE SUPP #6.	2. NEED ANCHORAGE DETAILS
SEE SUPP #6.	3. NEED LOCATIONS OF THE T TRAYS CALLED OUT
SEE SUPP #6.	4. FITTINGS ON CONDUITS.
SEE SUPP #6.	5. ANCHORAGE DETAIL OF THE UNISTRUT TO WHICH SPT. IS ATTACHED.
SEE SUPP #7	SPT. 7 ANY ATTACHMENTS ON CONDUITS.

CALCULATION NO.
REVISION NO. 0
ATTACHMENT NO. 1
SHEET NO. 13 OF 24

NewYorkPower Authority

Calculation No

Revision

Project IP3

Page 1 of 8

Subject A46 PROGRAM AS BUILT CONDUIT SUPP ELEC. TUNNEL EL 34'-0"

Computed by Date

Checked by Jm Date 10/4/94

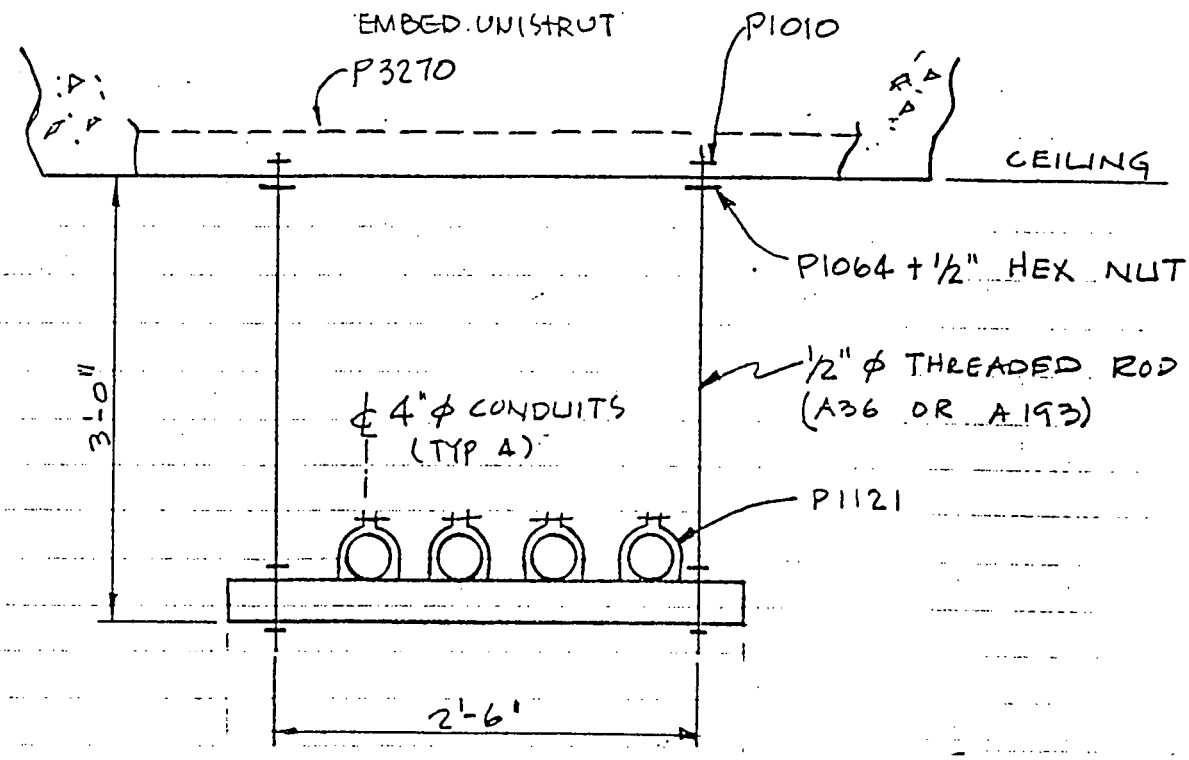

SUPPORT #1 - SECTION

SUPP SPAN = 5'-0"

CALCULATION NO.

REVISION NO. 0

ATTACHMENT NO. 1

SHEET NO. 14 OF 24

JO No 18904-00 PAGE 39 OF 48

CALC No 18904-IP3-S0014 REV 0

CALCULATION SHEET

ATOMETRICS

New York Power Authority

REVISION NO. 0

Calculation No. IP3. Revision 2 Page 8

Project ATTACHMENT NO. 1 OF 15

Subject A46 ~~PENETRATION NO. 46 BUILT~~ Computed by Date

TRAY SUPPORT Checked by Date 10/4/94

ABFP EL 15'-0"

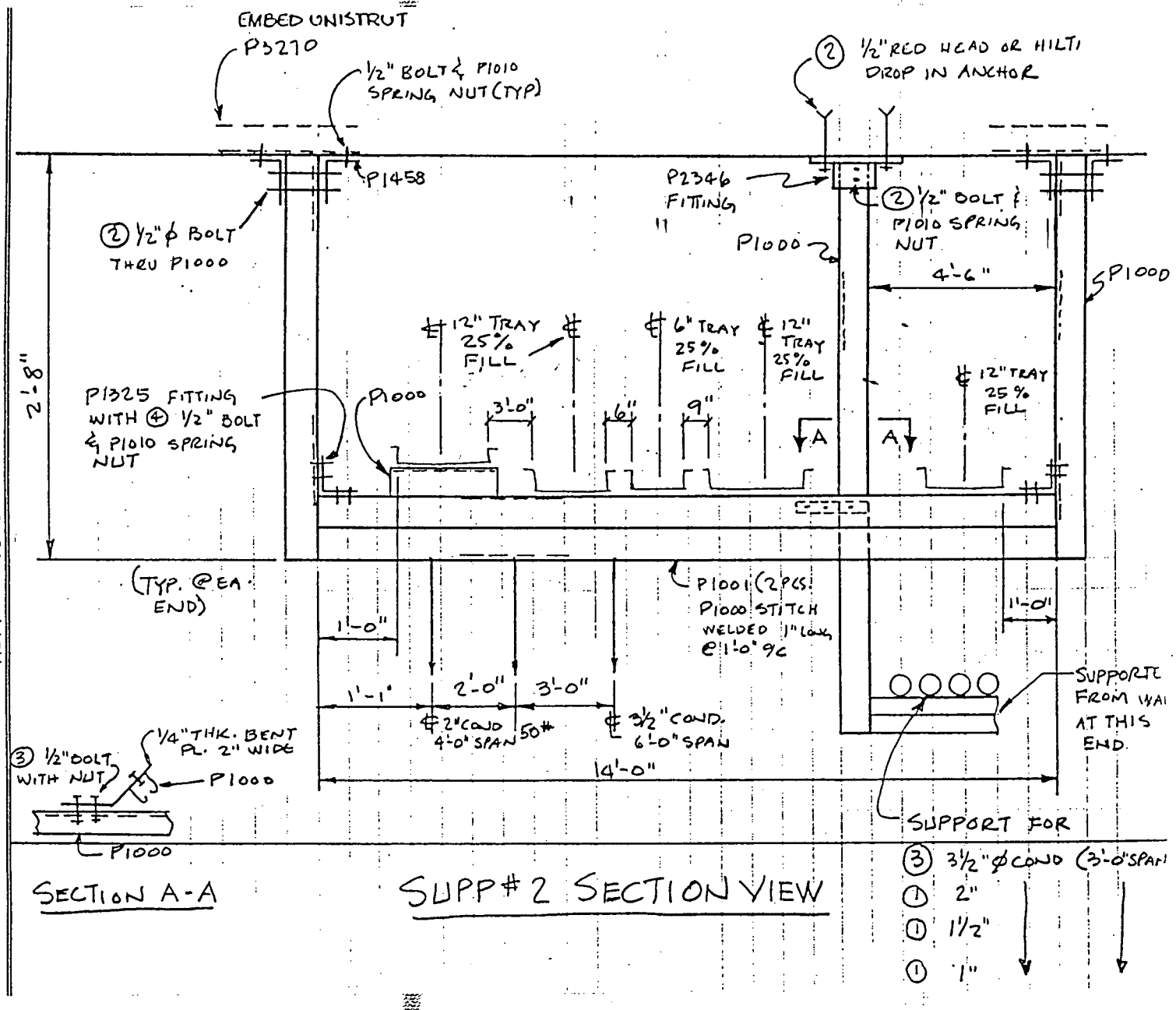

SECTION A-A

SUPP # 2 SECTION VIEW

NewYorkPower Authority

Calculation No

Revision

Project IP3

Page 3 of 8

Subject A46 PROGRAM AS BUILT
CONDUIT SUPPORT
ABFP EL 43'-0"

Computed by Date

Checked by Am Date 10/4/94

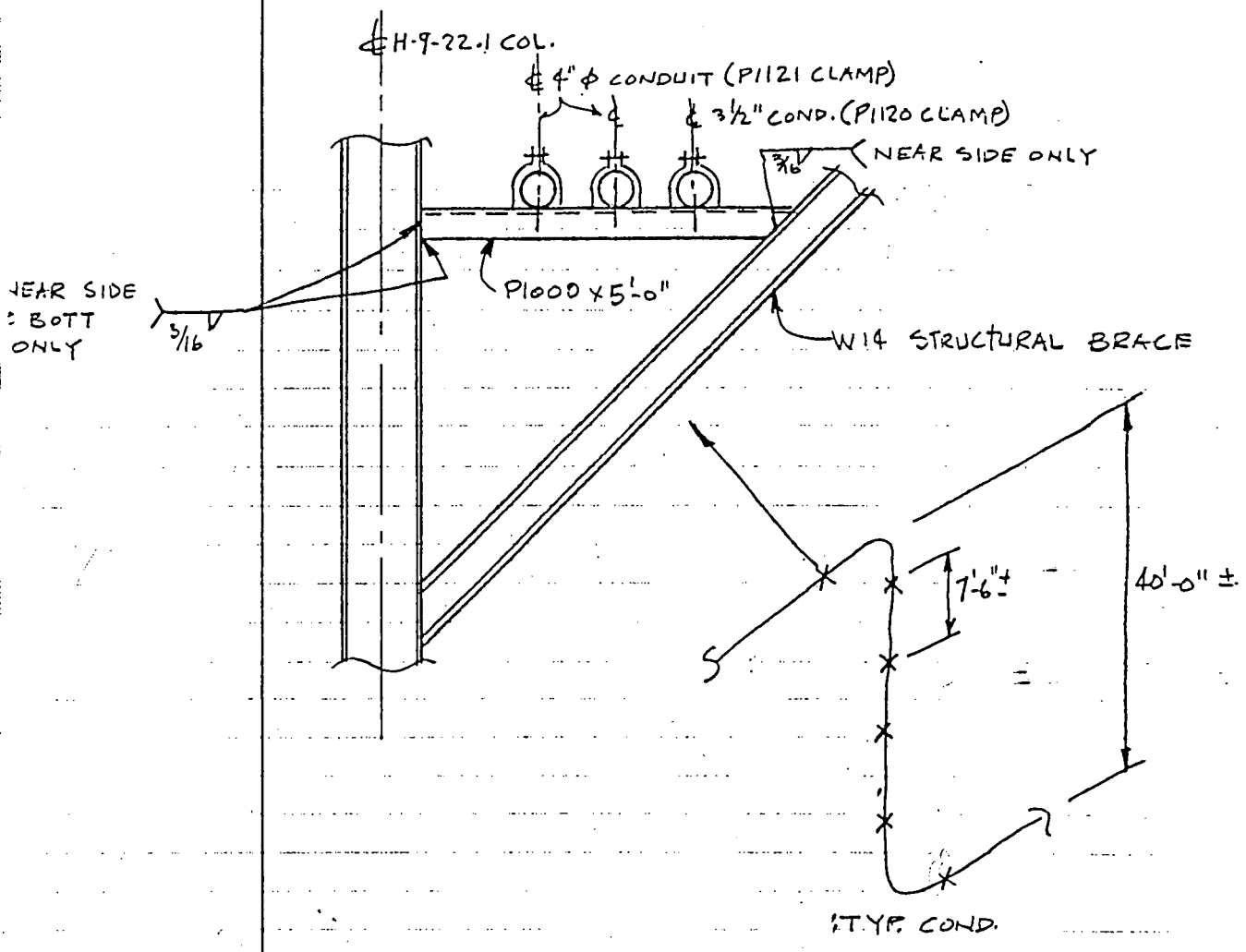

SUPPORT #3 SECTION

CALCULATION NO.

REVISION NO. 0

ATTACHMENT NO. 1

PAGE NO. 46 OF 24

NewYorkPower Authority

Calculation No

Revision

Project IP3

Page 4 of 8

Subject A46 PROGRAM AS BUILT
TRAY SUPPORT
CONTROL BLDG EL 15'-0"

Computed by Date

Checked by Gm Date 10/4/94

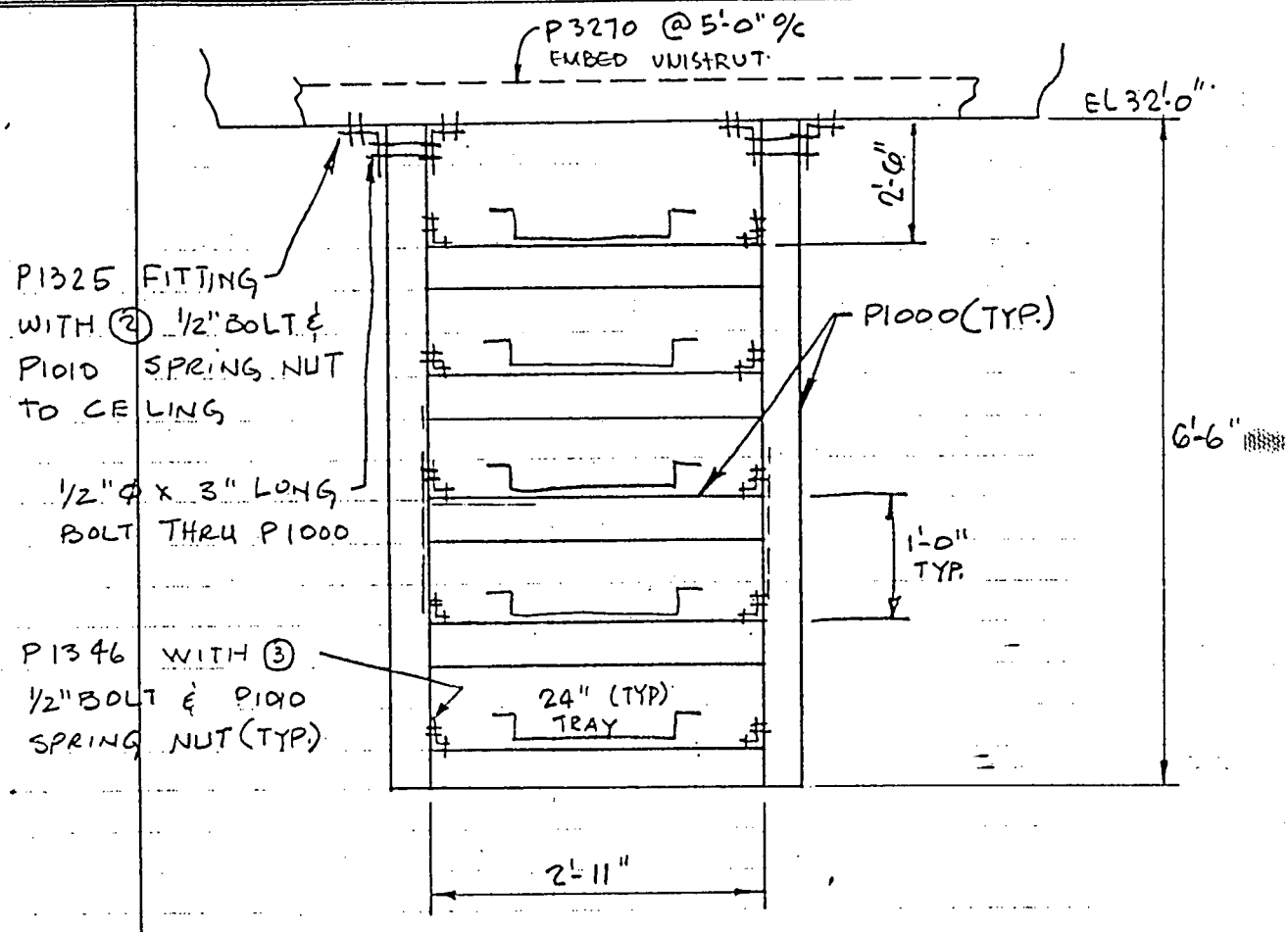

SUPPORT #4 SECTION

SPAN = 5'-0"

CALCULATION NO.

REVISION NO. 0

ATTACHMENT NO. 1

SHEET NO. 17 OF 24

NewYorkPower Authority

Calculation No.

Project IP3

Subject A46 PROGRAM AS BUILT
TRAY SUPPORT
ELECTRICAL TUNNEL EL 46'-0"

Revision

Page 5 of 8

Computed by Date

Checked by Gm Date 10/4/92

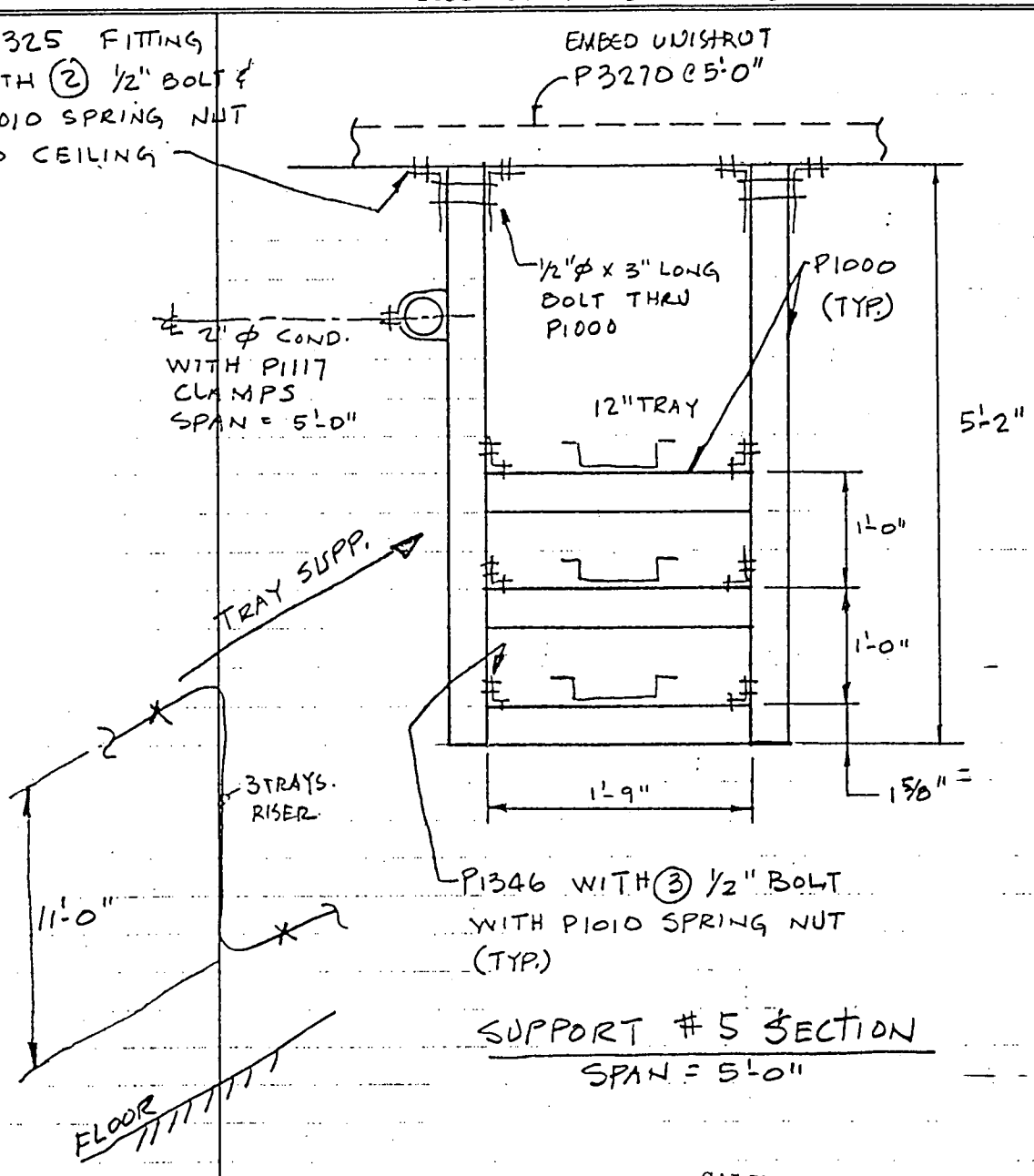

SUPPORT #5 SECTION
SPAN = 5'-0"

CALCULATION NO.

REVISION NO. = 0

ATTACHMENT NO. 1

SHEET NO. 18 OF 24

ATOMETRICS

CALCULATION SHEET

JO No 18904-00 PAGE 43 OF 48

CALC No 18904-IP3-SQ014 REV 0

Project IP3 Page 6 of 8

Subject A46 PROGRAM AS BUILT Computed by Date

TRAY SUPPORT Checked by Date 10/4/91

CONTROL BLDG EL 33'-0"

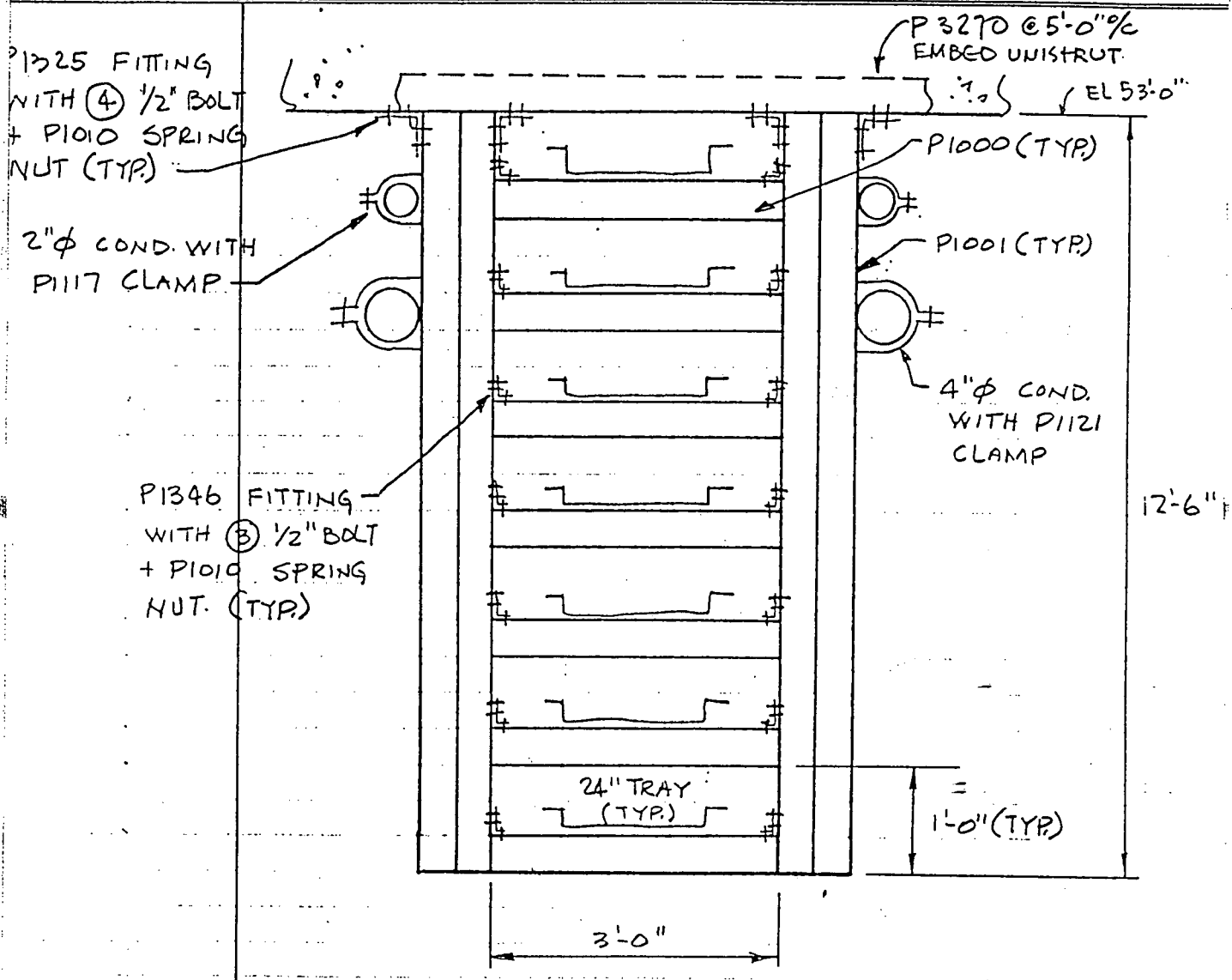

SUPPORT #6 SECTION

5'-0" SPAN (TRAY & CONDUIT)

CALCULATION NO.

REVISION NO. 0

ATTACHMENT NO. 1

SHEET NO. 19 OF 24

NewYorkPower Authority

Calculation No.

Revision

Project IP3

Page 7 of 8

Subject A46 PROGRAM AS BUILT CONDUIT SUPPORT PAB EL 41'-0"

Computed by Date

Checked by Date 10/4/94

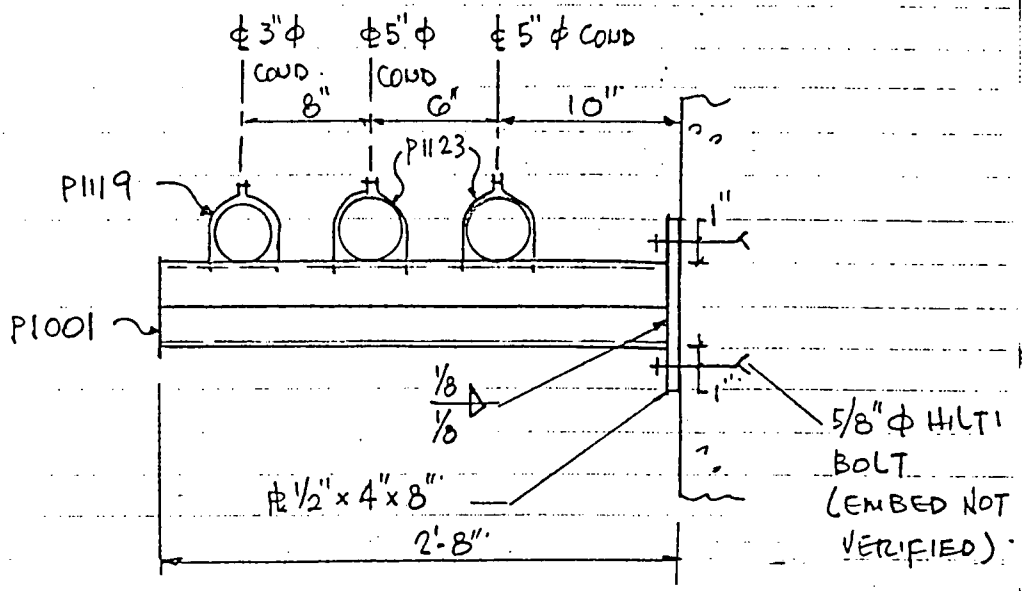

3"φ 5'-0" SPAN
5"φ 12'-0" SPAN
5"φ 12'-0" SPAN

SUPPORT # 7 SECTION

CALCULATION NO.

REVISION NO. 0

ATTACHMENT NO. -1

SHEET NO. 20 OF 24

Calculation No
Revision
Project IP3
Page 8 of 8
Subject A46 PROGRAM AS BUILT
TRAY SUPPORT
ELEC TUNNEL EL 34'-0"
Computed by Date
Checked by Am Date 10/4/92

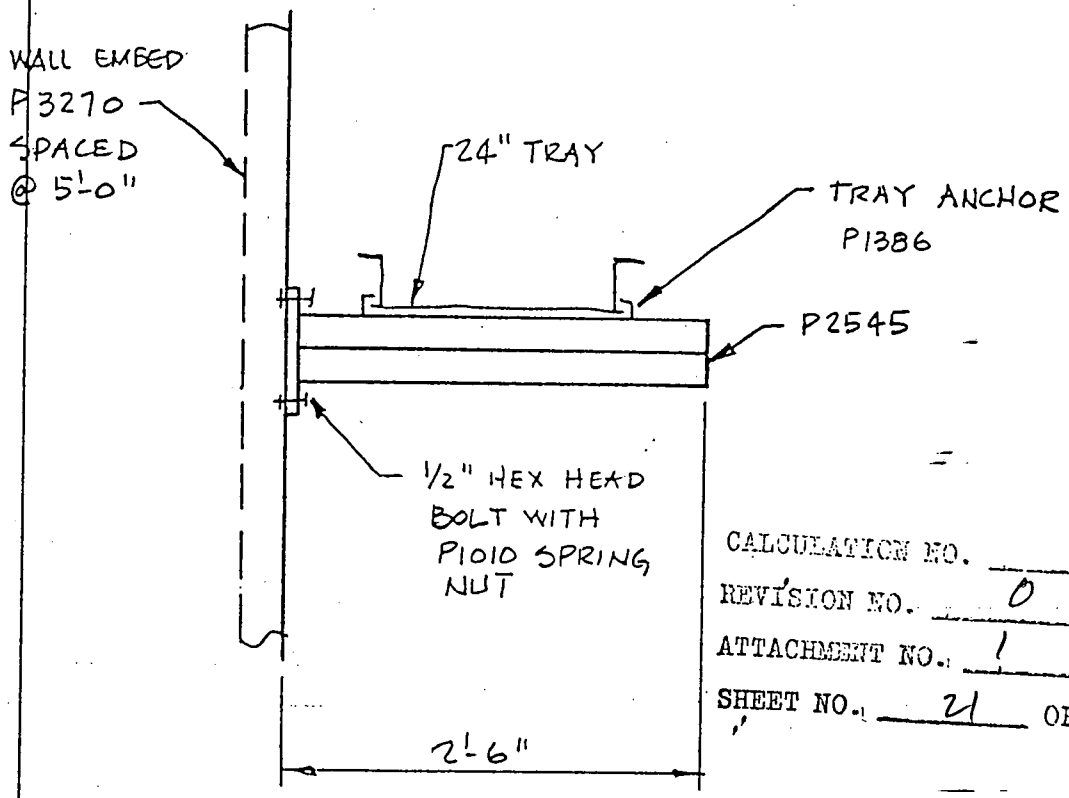

CALCULATION NO.
REVISION NO. 0
ATTACHMENT NO. 1
SHEET NO. 21 OF 24

SUPPORT # 8 SECTION

SUPPORT SPAN = 5'-0"

ATOMETRICS

FAX TRANSMITTAL

DATE: 11/8/94

OF PAGES 3
(includes fax cover sheet)

TO: John Mathew / Charbel Abou-Jaoude
VECTRA

FAX #: 508-370-3223

FROM: Jon Thompson

TEL NO.: 914-353-4040

MESSAGE: Attached is NYPA's response to your request for clarification of the cable tray as-built information. If you need more, please call.
914-353-4040

CALCULATION NO. 0
REVISION NO.
ATTACHMENT NO. 1
SHEET NO. 22 OF 24

RESPONSE BY JOHN MUI 11/8/94.

NEED FURTHER CLARIFICATION ON THE FOLLOWING

SPT. 2: SPANS FOR CABLE TRAY MISSING IN THE LATEST WALKDOWN INFO. SPANS FROM PREVIOUS WALKDOWN ARE BEING USED IN THE CALCULATION. NEED CONFIRMATION WHETHER IT IS THE RIGHT SPANS.

SPAN HAS NOT BEEN CHANGED FROM PREVIOUS SKETCH

SPT. 3: THE PREVIOUS WALKDOWN GAVE SPAN OF CONDUITS AS 30'. WHILE THE LATEST WALKDOWN GIVES TWO DIFFERENT SPANS. NEED THE ACTUAL EFFECTIVE SPAN ON THIS SUPPORT.

THE PREVIOUS SPAN OF 30' IS INCORRECTED. THE NEW SKETCH SHOWS AN ISO OF SUPPT & CONDUIT RUN. THE EFFECTIVE SPAN FOR HORIZ IS 8'-0 MAX & VERT IS 20' (1/2 OF 40').

SPT. 5: SPAN GIVEN AS 5'-0 & ALSO AS 11'-0 VERTICAL - WHICH IS THE RIGHT SPAN? IS 5'-0 ONLY THE HORIZONTAL SPACING OF SUPPORTS?

SEE NEXT PAGE.

SPT. 6:- THE SUPPORT FAILS ON VERTICAL LOAD CHECK WITH 100% FILL ON TRAYS. MAXIMUM FILL ON TRAYS TO BE LIMITED TO 50%.

IN ACCORDANCE WITH UE&C SUPPT. CALC. SUPPT IS DESIGNED TO 50#/FT OF TRAY.

∴ FOR SUPPT #6 (7 LEVEL OF TRAY @ 5'-0" SPAN)

$= (7) \times 5'\text{-}0'' \times 50\#/\text{FT.}$

$= \underline{\underline{1750\#}}$

SUPPORT #5.

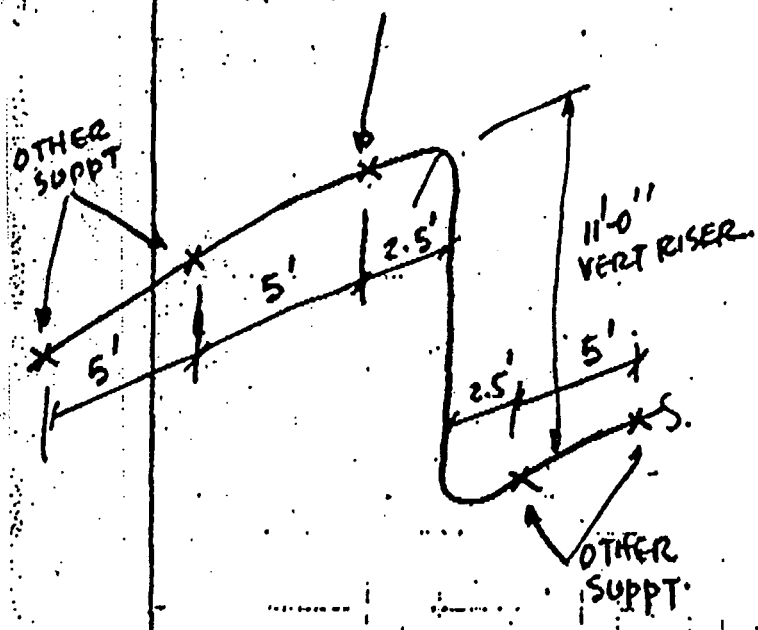

SPAN FOR SUPPT #5

$\frac{5'}{2} + 2.5' + \frac{11'}{2}$

CALCULATION NO. _____
REVISION NO. 0
ATTACHMENT NO. 1
SHEET NO. 24 OF 24

APPENDIX G

OUTLIER SCREENING VERIFICATION SHEET
(OSVS)

INDIAN POINT NUCLEAR GENERATING STATION UNIT 3
OUTLIER SEISMIC VERIFICATION SHEETS
(OSVSs)

Line	Eq. Cl	Eq. ID	OSVS No	Equipment Description	Bldg.	Fl. El.	Base El.	<40'?	Cap Spec.	Demd. Spec.	Cap > Demd?	Caveats OK?	Anchor OK?	Interact OK?	Equip OK?
1	21	0031ART	1	AIR RECEIVER 30 GAL. TANK # 31	DG	15'-0"	15'-0"	Y	ABS	CRS	Y	N/A	N	Y	N
2	21	0031CHPS	2	31 CHARG PMP SUCT STABILIZER SEPARATOR	PA	55'-0"	55'-0"	Y	ABS	CRS	Y	N/A	N	Y	N
3	0	0031OAL A	3	OUTSIDE AIR LOUVER 31 EDG	DG	44'-0"	44'-0"	Y	ABS	CRS	Y	N/A	Y	Y	N
4	0	0031OAL B	3	OUTSIDE AIR LOUVER 31 EDG	DG	44'-0"	44'-0"	Y	ABS	CRS	Y	N/A	Y	Y	N
5	0	0031OAL C	3	OUTSIDE AIR LOUVER 31 EDG	DG	44'-0"	44'-0"	Y	ABS	CRS	Y	N/A	Y	Y	N
6	21	0032ART	1	AIR RECEIVER 30 GAL. TANK # 32	DG	15'-0"	15'-0"	Y	ABS	CRS	Y	N/A	N	Y	N
7	21	0032CHPS	2	32 CHARG PMP SUCT STABILIZER SEPARATOR	PA	55'-0"	55'-0"	Y	ABS	CRS	Y	N/A	N	Y	N
8	0	0032OAL A	3	OUTSIDE AIR LOUVER 32 EDG	DG	44'-0"	44'-0"	Y	ABS	CRS	Y	N/A	Y	Y	N
9	0	0032OAL B	3	OUTSIDE AIR LOUVER 32 EDG	DG	44'-0"	44'-0"	Y	ABS	CRS	Y	N/A	Y	Y	N
10	0	0032OAL C	3	OUTSIDE AIR LOUVER 32 EDG	DG	44'-0"	44'-0"	Y	ABS	CRS	Y	N/A	Y	Y	N
11	21	0033ART	1	AIR RECEIVER 30 GAL. TANK # 33	DG	15'-0"	15'-0"	Y	ABS	CRS	Y	N/A	N	Y	N
12	21	0033CHPS	2	33 CHARG PMP SUCT STABILIZER SEPARATOR	PA	55'-0"	55'-0"	Y	ABS	CRS	Y	N/A	N	Y	N
13	0	0033OAL A	3	OUTSIDE AIR LOUVER 33 EDG	DG	44'-0"	44'-0"	Y	ABS	CRS	Y	N/A	Y	Y	N
14	0	0033OAL B	3	OUTSIDE AIR LOUVER 33 EDG	DG	44'-0"	44'-0"	Y	ABS	CRS	Y	N/A	Y	Y	N
15	0	0033OAL C	3	OUTSIDE AIR LOUVER 33 EDG	DG	44'-0"	44'-0"	Y	ABS	CRS	Y	N/A	Y	Y	N
16	21	31 PLSSHTX	4	31 PZR LIQ SPACE SAMPLE HTX	PA	55'-0"	55'-0"	Y	ABS	CRS	Y	N/A	Y	N	N
17	21	31 RCSSHTX	4	31 RCS SAMPLE HTX	PA	55'-0"	55'-0"	Y	ABS	CRS	Y	N/A	Y	N	N
18	21	32 PLSSHTX	4	32 PZR LIQ SPACE SAMPLE HTX	PA	55'-0"	55'-0"	Y	ABS	CRS	Y	N/A	Y	N	N
19	21	32 RCSSHTX	4	32 RCS SAMPLE HTX	PA	55'-0"	55'-0"	Y	ABS	CRS	Y	N/A	Y	N	N
20	16	34CHGR	5	BATTERY CHARGER 34	CB	33'-0"	33'-0"	Y	ABS	CRS	Y	N	N	Y	N
21	15	BATTERY 33	6	BATTERY BANK 33	DG	15'-0"	15'-0"	Y	ABS	CRS	Y	N	Y	Y	N
22	15	BATTERY 34	6	BATTERY BANK 34	CB	33'-0"	33'-0"	Y	ABS	CRS	Y	N	Y	Y	N
23	20	BF4	7	DG 31 CURRENT XFMR ENCLOSURE	DG	10'-0"	10'-0"	Y	ABS	CRS	Y	N	N	Y	N
24	20	BF5	7	DG 32 CURRENT XFMR ENCLOSURE	DG	10'-0"	10'-0"	Y	ABS	CRS	Y	N	N	Y	N
25	20	BF6	7	DG 33 CURRENT XFMR ENCLOSURE	DG	10'-0"	10'-0"	Y	ABS	CRS	Y	N	N	Y	N
26	04	BF8	8	120/120 VAC SOLATRON XFMR #32	CB	33'-0"	33'-0"	Y	ABS	CRS	Y	Y	N	Y	N
27	04	BI4	9	480/120 VAC SOLA XFMR (FOR IB-32,32A)	CB	33'-0"	33'-0"	Y	ABS	CRS	Y	N	N	Y	N
28	07	CH-FCV-111B	10	BLENDER FLOW TO VCT CTRL VLV	PA	78'-0"	78'-0"	Y	ABS	CRS	Y	Y	N/A	N	N
29	21	CSAHRG1	22	31 REGEN HTX	VC	68'-0"	68'-0"	N	ABS	CRS	Y	N/A	N	N	N
30	21	CST	11	CONDENSATE STOR TANK	YD	69'-0"	69'-0"	N	ABS	CRS	Y	Y	N	Y	N
31	20	FLIGHT PANEL	12	FLIGHT PANEL	CB	53'-0"	53'-0"	Y	ABS	CRS	Y	N	Y	N	N
32	01	MCC-36A EXTENSION	13	480 VAC MCC	PA	55'-0"	55'-0"	Y	ABS	CRS	Y	N	Y	Y	N
33	01	MCC-37	14	480 VAC MCC	PA	55'-0"	55'-0"	Y	ABS	CRS	Y	N	Y	Y	N
34	01	MCC-38	15	480 VAC MCC	VC	68'-0"	68'-0"	Y	ABS	CRS	Y	N	N	Y	N
35	01	MCC-39	13	480 VAC MCC	CB	33'-0"	33'-0"	Y	ABS	CRS	Y	N	N	Y	N
36	07	PCV-1042	4	HYDROGEN SUPPLY PRESSURE CONTROL VLV	PA	55'-0"	55'-0"	Y	ABS	CRS	Y	Y	N/A	N	N

INDIAN POINT NUCLEAR GENERATING STATION UNIT 3
OUTLIER SEISMIC VERIFICATION SHEETS
(OSVSs)

Line	Eq. Cl	Eq. ID	OSVS No	Equipment Description	Bldg.	Fl. El.	Base El.	<40'?	Cap Spec.	Demd. Spec.	Cap > Demd?	Caveats OK?	Anchor OK?	Interact OK?	Equip OK?
37	20	PNL #2	4	ATM STEAM DUMP PANEL #2	AB	43'-0"	43'-0"	Y	ABS	CRS	Y	Y	Y	N	N
38	20	PNL 31EDGA	16	31 EDG AUXILIARIES CONTROL PANEL	DG	15'-0"	15'-0"	Y	ABS	CRS	Y	Y	Y	N	N
39	20	PNL 33EDGA	16	33 EDG AUXILIARIES CONTROL PANEL	DG	15'-0"	15'-0"	Y	ABS	CRS	Y	Y	Y	N	N
40	20	PNL JC1	16	FAN ROOM CONTROL PANEL	FH	72'-0"	72'-0"	N	ABS	CRS	Y	Y	Y	N	N
41	20	PNL PF6	4	GAS ANALYZING PANEL	PA	55'-0"	55'-0"	Y	ABS	CRS	Y	Y	Y	N	N
42	20	PNL PQ1	17	32 EDG CONTROL PANEL	DG	15'-0"	15'-0"	Y	ABS	CRS	Y	Y	Y	N	N
43	20	PNL PQ2	17	33 EDG CONTROL PANEL	DG	15'-0"	15'-0"	Y	ABS	CRS	Y	Y	Y	N	N
44	20	PNL PY5	31	DELUGE SYS CONTROL PANEL	PP	34'-0"	34'-0"	Y	ABS	CRS	Y	Y	Y	N	N
45	18	PT-1191	18	SVC WATER NUCL HDR PRESS XMTR	TB	15'-0"	15'-0"	Y	ABS	CRS	Y	Y	N	Y	N
46	21	PWST 21	19	PRIMARY WATER STORAGE TANK	YD	54'-0"	54'-0"	Y	ABS	CRS	Y	Y	N	Y	N
47	18	RACK 24A	4	INSTRUMENT RACK	PA	41'-0"	41'-0"	Y	ABS	CRS	Y	Y	Y	N	N
48	18	RACK 6A	4	INSTRUMENT RACK	PP	41'-0"	41'-0"	Y	ABS	CRS	Y	Y	Y	N	N
49	20	RACK C-11	23	CCR RACK	CB	53'-0"	53'-0"	Y	ABS	CRS	Y	N	N	Y	N
50	20	RACK F-7	24	CCR RACK	CB	53'-0"	53'-0"	Y	ABS	CRS	Y	N	Y	N	N
51	20	RACK G-2	25	CCR RACK	CB	53'-0"	53'-0"	Y	ABS	CRS	Y	N	Y	Y	N
52	20	RACK G-3	26	CCR RACK	CB	53'-0"	53'-0"	Y	ABS	CRS	Y	N	Y	Y	N
53	20	RACK H-2	2	CCR RACK	CB	53'-0"	53'-0"	Y	ABS	CRS	Y	Y	N	Y	N
54	20	RACK H-3	2	CCR RACK	CB	53'-0"	53'-0"	Y	ABS	CRS	Y	Y	N	Y	N
55	21	RWST-31	19	REFUEL WTR STORAGE TANK	YD	80'-0"	80'-0"	Y	ABS	CRS	Y	Y	N	Y	N
56	20	SUPERVISORY PANEL	20	SUPERVISORY PANEL	CB	53'-0"	53'-0"	Y	ABS	CRS	Y	N	N	Y	N
57	02	SWGR 31	21	480VAC SWGR 31 BUS 2A & 5A	CB	15'-0"	15'-0"	Y	ABS	CRS	Y	N	Y	N	N
58	02	SWGR 32	21	480VAC SWGR 32 BUS 3A & 6A	CB	15'-0"	15'-0"	Y	ABS	CRS	Y	N	Y	N	N
59	0	T1	29	CR AC THERMOSTAT	CB	53'-0"	53'-0"	Y	ABS	CRS	Y	N/A	Y	N	N
60	19	TE-126	22	REGEN HX CHG FLOW TEMP ELEMENT	VC	46'-0"	46'-0"	Y	ABS	CRS	Y	N	N	N	N
61	19	TE-1319	22	RVWL LOWER TAP CAPILLARY COMP TEMP ELEMENT	VC	60'-0"	60'-0"	Y	ABS	CRS	Y	N	N	N	N
62	19	TE-1329	22	RVWL LOWER TAP CAPILLARY COMP. TEMP. ELEMENT	VC	60'-0"	60'-0"	Y	ABS	CRS	Y	N	N	N	N
63	19	TE-411B	27	RCS LOOP 31 COLD LEG TEMP ELEMENT	VC	46'-0"	46'-0"	Y	ABS	CRS	Y	Y	N/A	N	N
64	19	TE-641	28	RHR HX 32 OUTLET TEMP ELEMENT	VC	46'-0"	46'-0"	Y	ABS	CRS	Y	Y	N/A	N	N

OUTLIER SEISMIC VERIFICATION SHEET (OSVS)

1. OUTLIER IDENTIFICATION, DESCRIPTION, AND LOCATION

Equipment:

I.D. Number	Cls	Bldg	Elev	Description
0031ART	21	DG	15'-0"	Diesel Air Reseiver Tank
0032ART	21	DG	15'-0"	Diesel Air Receiver Tank
0033ART	21	DG	15'-0"	Diesel Air Receiver Tank

2. OUTLIER ISSUE DEFINITION

a. Identify all the screening guidlines which are not met.

Mechanical Equipment: Anchorage

b. Describe all the reasons for the outlier.

The tanks are mounted onto grating and the grating is not anchored.

3. PROPOSED METHOD OF OUTLIER RESOLUTION (OPTIONAL)

Secure grating.

4. CERTIFICATION

The information on this OSVS is, to the best of our knowledge and belief, correct and accurate, and resolution of the outlier issues listed will satisfy the requirements for this item of equipment to be verified for seismic adequacy.

Print Name	Signature	Date
M Lakis	M Lakis	10/28/95
Paul Smith	[illegible]	11/2/95

OUTLIER SEISMIC VERIFICATION SHEET (OSVS)

1. OUTLIER IDENTIFICATION, DESCRIPTION, AND LOCATION

Equipment:

I.D. Number	Cls	Bldg	Elev	Description
0031CHPS	5	PA	55'-0"	Charging Pump 31 Suction Stabilizer Separator
0032CHPS	5	PA	55'-0"	Charging Pump 32 Suction Stabilizer Separator
0033CHPS	5	PA	55'-0"	Charging Pump 33 Suction Stabilizer Separator
RACK H-2	20	CB	53'-0"	CCR Rack
RACK H-3	20	CB	53'-0"	CCR Rack

2. OUTLIER ISSUE DEFINITION

a. Identify all the screening guidlines which are not met.

Mechanical and Electrical Equipment: Anchorage

b. Describe all the reasons for the outlier.

The bolt tightness checks revealed loose anchors.

3. PROPOSED METHOD OF OUTLIER RESOLUTION (OPTIONAL)

Tighten anchors.

4. CERTIFICATION

The information on this OSVS is, to the best of our knowledge and belief, correct and accurate, and resolution of the outlier issues listed will satisfy the requirements for this item of equipment to be verified for seismic adequacy.

Print Name	Signature	Date
A. C. PAL		10/24/95
Paul Smith		11/2/95
M. Lakis	M Lakis	10/28/95
H. Johnson		11/3/95

ATOMETRICS

OUTLIER SEISMIC VERIFICATION SHEET (OSVS)

1. OUTLIER IDENTIFICATION, DESCRIPTION, AND LOCATION

Equipment:

I.D. Number	Cls	Bldg	Elev	Description
0031 OALA	0	DG	15'-0"	DG 31 Outside Air Louver
0031 OALB	0	DG	15'-0"	DG 31 Outside Air Louver
0031 OALC	0	DG	15'-0"	DG 31 Outside Air Louver
0032 OALA	0	DG	15'-0"	DG 32 Outside Air Louver
0032 OALB	0	DG	15'-0"	DG 32 Outside Air Louver
0032 OALC	0	DG	15'-0"	DG 32 Outside Air Louver
0033 OALA	0	DG	15'-0"	DG 33 Outside Air Louver
0033 OALB	0	DG	15'-0"	DG 33 Outside Air Louver
0033 OALC	0	DG	15'-0"	DG 33 Outside Air Louver

2. OUTLIER ISSUE DEFINITION

a. Identify all the screening guidlines which are not met.

Mechanical Equipment: Other - Equipment Class 0

b. Describe all the reasons for the outlier.

These are equipment Class 0 as they are pneumatically operated louvers which do not fit in any other equipment class, therefore, by definition are outliers.

3. PROPOSED METHOD OF OUTLIER RESOLUTION (OPTIONAL)

Evaluate using the GIP criteria. **COMPLETE:** The SRT evaluated this equipment during the walkdown and judged it seismically adequate.

4. CERTIFICATION

The information on this OSVS is, to the best of our knowledge and belief, correct and accurate, and resolution of the outlier issues listed will satisfy the requirements for this item of equipment to be verified for seismic adequacy.

Print Name	Signature	Date
M Lakis	M Lakis	10/28/95
Paul Smith	Paul	11/2/95

OUTLIER SEISMIC VERIFICATION SHEET (OSVS)

1. OUTLIER IDENTIFICATION, DESCRIPTION, AND LOCATION

Equipment:

I.D. Number	Cls	Bldg	Elev	Description
31 PLSSHTX	21	PAB	55'-0"	Prz Liq Space Smpl Htx 32
32 PLSSHTX	21	PAB	55'-0"	Prz Liq Space Smpl Htx 32
31 RCSSHTX	21	PAB	55'-0"	RCS Smpl Htx 32
32 RCSSHTX	21	PAB	55'-0"	RCS Smpl Htx 32
PCV-1042	7	PAB	55'-0"	H2 Supply Press Cntrl Valve
PNL #2	20	AB	43'-0"	Aux Steam Dump Panel
PNL PF6	20	PAB	55'-0"	Gas Analyzing Panel
RACK 6A	18	PP	41'-0"	Instrument Rack
RACK 24A	18	PAB	41'-0"	Ctmnt Press Xmtrs Inst Rack

2. OUTLIER ISSUE DEFINITION

a. Identify all the screening guidlines which are not met.

Mechanical and Electrical Equipment: Interaction

b. Describe all the reasons for the outlier.

Compressed air/gas bottles in area inadequately restrained. Potential interaction hazard.

3. PROPOSED METHOD OF OUTLIER RESOLUTION (OPTIONAL)

Adequately restrain air/gas bottles.

PCV-1042 **COMPLETE:** Air bottles have been adequately restrained.

PNL #2, the gas bottles have been temporarily restrained. Type 1 design will follow.

RACK 24A, **COMPLETE:** Air bottles have been properly restrained, by Maintenance, 4/95.

OUTLIER SEISMIC VERIFICATION SHEET
(OSVS)

4. **CERTIFICATION**

The information on this OSVS is, to the best of our knowledge and belief, correct and accurate, and resolution of the outlier issues listed will satisfy the requirements for this item of equipment to be verified for seismic adequacy.

Print Name	Signature	Date
A.C. PAL		10/24/95
Paul Smith		
M Lakis	M Lakis	10/28/95
H. JOHNSON.		11/3/95.

OUTLIER SEISMIC VERIFICATION SHEET (OSVS)

1. OUTLIER IDENTIFICATION, DESCRIPTION, AND LOCATION

Equipment:

I.D. Number	Cls	Bldg	Elev	Description
34CHGR (GF3)	4	CB	33'-0"	Battery Charger 34

2. OUTLIER ISSUE DEFINITION

a. Identify all the screening guidlines which are not met.

Electrical Equipment: Caveats

b. Describe all the reasons for the outlier.

Grating inside charger which supports the transformers, about 2 feet off floor, not secure.

3. PROPOSED METHOD OF OUTLIER RESOLUTION (OPTIONAL)

Secure grating.

4. CERTIFICATION

The information on this OSVS is, to the best of our knowledge and belief, correct and accurate, and resolution of the outlier issues listed will satisfy the requirements for this item of equipment to be verified for seismic adequacy.

Print Name	Signature	Date
A C PAL		10/24/95
H. JOHNSON		11/3/95.

ATOMETRICS

OUTLIER SEISMIC VERIFICATION SHEET (OSVS)

1. OUTLIER IDENTIFICATION, DESCRIPTION, AND LOCATION

Equipment:

I.D. Number	Cls	Bldg	Elev	Description
BATTERY 33	15	DG	15'-0"	Battery Bank 33
BATTERY 34	15	CB	33'-0"	Battery Bank 34

2. OUTLIER ISSUE DEFINITION

a. Identify all the screening guidlines which are not met.

Electrical Equipment: Caveats

b. Describe all the reasons for the outlier.

Side rail not tight against new batteries in BATTERY 33. Battery spacers and one (1) end rail missing in BATTERY 34.

3. PROPOSED METHOD OF OUTLIER RESOLUTION (OPTIONAL)

Add tight fitting spacers between new batteries and rails in BATTERY 33.

Install spacers and end railin BATTERY 34. **COMPLETE:** DER 94-367,Spacers and end rail installed, WR 88-14077-00; Work completed.

4. CERTIFICATION

The information on this OSVS is, to the best of our knowledge and belief, correct and accurate, and resolution of the outlier issues listed will satisfy the requirements for this item of equipment to be verified for seismic adequacy.

Print Name	Signature	Date
M Lakis	M Lakis	10/28/95
Paul Smith	Paul S	11/2/95

OUTLIER SEISMIC VERIFICATION SHEET (OSVS)

1. OUTLIER IDENTIFICATION, DESCRIPTION, AND LOCATION

Equipment:

I.D. Number	Cls	Bldg	Elev	Description
BF-4	20	DG	10'-0"	DG 31 Current Xfmr Enclosure
BF-5	20	DG	10'-0"	DG 32 Current Xfmr Enclosure
BF-6	20	DG	10'-0"	DG 33 Current Xfmr Enclosure

2. OUTLIER ISSUE DEFINITION

a. Identify all the screening guidlines which are not met.

Electrical Equipment: Anchorage

b. Describe all the reasons for the outlier.

Cast in place anchors not grouted, therefore, are unacceptable due to bending.

3. PROPOSED METHOD OF OUTLIER RESOLUTION (OPTIONAL)

Grout anchors.

4. CERTIFICATION

The information on this OSVS is, to the best of our knowledge and belief, correct and accurate, and resolution of the outlier issues listed will satisfy the requirements for this item of equipment to be verified for seismic adequacy.

Print Name	Signature	Date
A.C. Pal		10/24/95
H. Johnson		11/3/95

ATOMETRICS

OUTLIER SEISMIC VERIFICATION SHEET (OSVS)

1. OUTLIER IDENTIFICATION, DESCRIPTION, AND LOCATION

Equipment:

I.D. Number	Cls	Bldg	Elev	Description
BF8	4	CB	33'-0"	120/120 VAC Sloatron XFMR

2. OUTLIER ISSUE DEFINITION

a. Identify all the screening guidlines which are not met.

Electrical Equipment: Anchorage

b. Describe all the reasons for the outlier.

Component missing two (2) screws attaching unit to wall bracket.

3. PROPOSED METHOD OF OUTLIER RESOLUTION (OPTIONAL)

Replace screws.

4. CERTIFICATION

The information on this OSVS is, to the best of our knowledge and belief, correct and accurate, and resolution of the outlier issues listed will satisfy the requirements for this item of equipment to be verified for seismic adequacy.

Print Name	Signature	Date
[illegible]	[illegible]	10/24/95
H. JOHNSON	[illegible]	11/3/95

OUTLIER SEISMIC VERIFICATION SHEET (OSVS)

1. OUTLIER IDENTIFICATION, DESCRIPTION, AND LOCATION

Equipment:

I.D. Number	Cls	Bldg	Elev	Description
BI4	4	CB	33'-0"	480/120 VAC Sola XFMR for 1B-33 and 33A

2. OUTLIER ISSUE DEFINITION

a. Identify all the screening guidlines which are not met.

Electrical Equipment: Caveats, Anchorage

b. Describe all the reasons for the outlier.

Unistrut nuts in lower unit improperly installed.

3. PROPOSED METHOD OF OUTLIER RESOLUTION (OPTIONAL)

Properly install unistrut nuts.

4. CERTIFICATION

The information on this OSVS is, to the best of our knowledge and belief, correct and accurate, and resolution of the outlier issues listed will satisfy the requirements for this item of equipment to be verified for seismic adequacy.

Print Name	Signature	Date
A C Pal		10/24/95
H. Johnson		11/3/95

OUTLIER SEISMIC VERIFICATION SHEET (OSVS)

1. OUTLIER IDENTIFICATION, DESCRIPTION, AND LOCATION

Equipment:

I.D. Number	Cls	Bldg	Elev	Description
CH-FCV-111B	7	PAB	78'-0"	Blender Flow To VCT Control Valve

2. OUTLIER ISSUE DEFINITION

a. Identify all the screening guidlines which are not met.

Mechanical Equipment: Interaction

b. Describe all the reasons for the outlier.

Attached air line has inadequate flexibility.

3. PROPOSED METHOD OF OUTLIER RESOLUTION (OPTIONAL)

Provide adequate flexibility in attached piping.

4. CERTIFICATION

The information on this OSVS is, to the best of our knowledge and belief, correct and accurate, and resolution of the outlier issues listed will satisfy the requirements for this item of equipment to be verified for seismic adequacy.

Print Name	Signature	Date
A.E. PAL		10/24/95
H. JOHNSON.		11/3/95.

OUTLIER SEISMIC VERIFICATION SHEET (OSVS)

1. OUTLIER IDENTIFICATION, DESCRIPTION, AND LOCATION

Equipment:

I.D. Number	Cls	Bldg	Elev	Description
CST	21	YD	69'-0"	Condensate Storage Tank

2. OUTLIER ISSUE DEFINITION

a. Identify all the screening guidlines which are not met.

Tanks: Anchorage

b. Describe all the reasons for the outlier.

Anchorage stiffener plate does not meet initial GIP criteria.

3. PROPOSED METHOD OF OUTLIER RESOLUTION (OPTIONAL)

Futher engineering evaluation. **COMPLETE:** Issue resolved by futher evaluation using GIP guidance and EPRI NP-5228, Vol IV. Documented in calc 18904-IP3-~~015~~ 06 SQ017

4. CERTIFICATION

The information on this OSVS is, to the best of our knowledge and belief, correct and accurate, and resolution of the outlier issues listed will satisfy the requirements for this item of equipment to be verified for seismic adequacy.

Print Name	Signature	Date
A.C. PAL		10/26/95
H. JOHNSON.		11/3/95.

OUTLIER SEISMIC VERIFICATION SHEET (OSVS)

1. OUTLIER IDENTIFICATION, DESCRIPTION, AND LOCATION

Equipment:

I.D. Number	Cls	Bldg	Elev	Description
FLIGHT PANEL	20	CB	53'-0"	Flight Panel

2. OUTLIER ISSUE DEFINITION

a. Identify all the screening guidlines which are not met.

Electrical Equipment:	Caveats
Essential Relays:	Mounting

b. Describe all the reasons for the outlier.

Adjacent panels JO1 and JO2 not connected to flight panels, nor to each other.

Loose relays in Panel Section FBF.

3. PROPOSED METHOD OF OUTLIER RESOLUTION (OPTIONAL)

Provide adequate connection between cabinets.

Tighten relays. **COMPLETE:** Relays have been tightened, PID 11589 & 11590.

4. CERTIFICATION

The information on this OSVS is, to the best of our knowledge and belief, correct and accurate, and resolution of the outlier issues listed will satisfy the requirements for this item of equipment to be verified for seismic adequacy.

M Lakis	M Lakis	10/28/95
Print Name	Signature	Date
Paul Smith	[illegible]	11/2/95
Print Name	Signature	Date

OUTLIER SEISMIC VERIFICATION SHEET (OSVS)

1. OUTLIER IDENTIFICATION, DESCRIPTION, AND LOCATION

Equipment:

I.D. Number	Cls	Bldg	Elev	Description
MCC-36A EXT	1	PAB	55'-0"	480V Motor Control Center
MCC-39	1	CB	33'-0"	480V Motor Control Center

2. OUTLIER ISSUE DEFINITION

a. Identify all the screening guidlines which are not met.

Electrical Equipment: Caveats

b. Describe all the reasons for the outlier.

Not adequately connected to adjacent bays.

3. PROPOSED METHOD OF OUTLIER RESOLUTION (OPTIONAL)

Connect adjacent bays at top and bottom.

MCC-39 **COMPLETE:** Bays adequately connected per Type 1 Change No. DC-94-3-273 CB completed on 2-1-95.

4. CERTIFICATION

The information on this OSVS is, to the best of our knowledge and belief, correct and accurate, and resolution of the outlier issues listed will satisfy the requirements for this item of equipment to be verified for seismic adequacy.

Print Name	Signature	Date
A.C. PAL		10/24/95
H. JOHNSON		11/3/95

OUTLIER SEISMIC VERIFICATION SHEET (OSVS)

1. OUTLIER IDENTIFICATION, DESCRIPTION, AND LOCATION

Equipment:

I.D. Number	Cls	Bldg	Elev	Description
MCC-37	1	PAB	55'-0"	480V Motor Control Center

2. OUTLIER ISSUE DEFINITION

a. Identify all the screening guidlines which are not met.

Electrical Equipment: Caveats

b. Describe all the reasons for the outlier.

Adjacent chemistry cabinet not anchored

3. PROPOSED METHOD OF OUTLIER RESOLUTION (OPTIONAL)

Move cabinet. **COMPLETE:** Chemistry cabinet has been moved away.

4. CERTIFICATION

The information on this OSVS is, to the best of our knowledge and belief, correct and accurate, and resolution of the outlier issues listed will satisfy the requirements for this item of equipment to be verified for seismic adequacy.

Print Name	Signature	Date
AC Pal	[signature]	10/24/95
H. Johnson	[signature]	11/3/95

OUTLIER SEISMIC VERIFICATION SHEET (OSVS)

1. OUTLIER IDENTIFICATION, DESCRIPTION, AND LOCATION

Equipment:

I.D. Number	Cls	Bldg	Elev	Description
MCC-38	1	VC	68'-0"	480V Motor Control Center

2. OUTLIER ISSUE DEFINITION

a. Identify all the screening guidlines which are not met.

Electrical Equipment: Anchorage

b. Describe all the reasons for the outlier.

No anchorage.

3. PROPOSED METHOD OF OUTLIER RESOLUTION (OPTIONAL)

Install anchorage - outage MOD required.
DER 94-690

4. CERTIFICATION

The information on this OSVS is, to the best of our knowledge and belief, correct and accurate, and resolution of the outlier issues listed will satisfy the requirements for this item of equipment to be verified for seismic adequacy.

Print Name	Signature	Date
M Kaki's	M Lakis	10/28/95
Paul Smith	Paul Smith	11/2/95

OUTLIER SEISMIC VERIFICATION SHEET (OSVS)

1. OUTLIER IDENTIFICATION, DESCRIPTION, AND LOCATION

Equipment:

I.D. Number	Cls	Bldg	Elev	Description
PNL 31EDGA	20	DG	15'-0"	31 EDG Aux Control Panel
PNL 33EDGA	20	DG	15'-0"	32 EDG Aux Control Panel
PNL JC1	20	FH	72'-0"	Fan Room Control Panel

2. OUTLIER ISSUE DEFINITION

a. Identify all the screening guidlines which are not met.

Mechanical and Electrical Equipment: Interaction

b. Describe all the reasons for the outlier.

Nearby emergency light is a potential interaction hazard.

3. PROPOSED METHOD OF OUTLIER RESOLUTION (OPTIONAL)

Secure emergency light.

4. CERTIFICATION

The information on this OSVS is, to the best of our knowledge and belief, correct and accurate, and resolution of the outlier issues listed will satisfy the requirements for this item of equipment to be verified for seismic adequacy.

Print Name	Signature	Date
[illegible]	[illegible]	10/24/95
H. JOHNSON.	[illegible]	11/3/95.

OUTLIER SEISMIC VERIFICATION SHEET (OSVS)

1. OUTLIER IDENTIFICATION, DESCRIPTION, AND LOCATION

Equipment:

I.D. Number	Cls	Bldg	Elev	Description
PNL PQ1	20	DG	15'-0"	DG 32 Control Panel
PNL PQ2	20	DG	15'-0"	DG 33 Control Panel

2. OUTLIER ISSUE DEFINITION

a. Identify all the screening guidlines which are not met.

Mechanical and Electrical Equipment: Interaction

b. Describe all the reasons for the outlier.

Ventilation duct too close to panels, also additional panel behind these panels with no gap between.

3. PROPOSED METHOD OF OUTLIER RESOLUTION (OPTIONAL)

Add separators and/or connectors between DG panels and ventilation duct and adjacent electrical panel as required.

4. CERTIFICATION

The information on this OSVS is, to the best of our knowledge and belief, correct and accurate, and resolution of the outlier issues listed will satisfy the requirements for this item of equipment to be verified for seismic adequacy.

Print Name	Signature	Date
AC PAL		10/24/95
H. JOHNSON.		11/3/95.

ATOMETRICS

OUTLIER SEISMIC VERIFICATION SHEET (OSVS)

1. OUTLIER IDENTIFICATION, DESCRIPTION, AND LOCATION

Equipment:

I.D. Number	Cls	Bldg	Elev	Description
PT-1191	18	TB	15'-0"	Service Water Nuclear Header Press Xmtr

2. OUTLIER ISSUE DEFINITION

a. Identify all the screening guidlines which are not met.

Mechanical and Electrical Equipment: Anchoage

b. Describe all the reasons for the outlier.

Transmitter U-bolt was loose.

3. PROPOSED METHOD OF OUTLIER RESOLUTION (OPTIONAL)

Tighten U-bolt. **COMPLETE:** U-bolt tightened. PID 12603, WR 94-04148, 2/25/95.

4. CERTIFICATION

The information on this OSVS is, to the best of our knowledge and belief, correct and accurate, and resolution of the outlier issues listed will satisfy the requirements for this item of equipment to be verified for seismic adequacy.

Print Name	Signature	Date
M Lakis	M Lakis	10/28/95
H. Johnson	[illegible]	11/3/95

ATOMETRICS

OUTLIER SEISMIC VERIFICATION SHEET (OSVS)

1. OUTLIER IDENTIFICATION, DESCRIPTION, AND LOCATION

Equipment:

I.D. Number	Cls	Bldg	Elev	Description
PWST 21	21	YD	54'-0"	Primary Water Storage Tank
RWST-31	21	YD	80'-0"	Refueling Water Storage Tank

2. OUTLIER ISSUE DEFINITION

a. Identify all the screening guidlines which are not met.

Mechanical and Electrical Equipment: Anchoage

b. Describe all the reasons for the outlier.

Anchorage evaluation indicates the anchorage cannot resist tank overturning moment.

3. PROPOSED METHOD OF OUTLIER RESOLUTION (OPTIONAL)

Futher engineering evaluation is required.

4. CERTIFICATION

The information on this OSVS is, to the best of our knowledge and belief, correct and accurate, and resolution of the outlier issues listed will satisfy the requirements for this item of equipment to be verified for seismic adequacy.

H. JOHNSON.	H. Johnson.	11/3/95.
Print Name	Signature	Date
A.C. PAL	A. C. PAL.	11/6/95
Print Name	Signature	Date

OUTLIER SEISMIC VERIFICATION SHEET (OSVS)

1. OUTLIER IDENTIFICATION, DESCRIPTION, AND LOCATION

Equipment:

I.D. Number	Cls	Bldg	Elev	Description
SUPERVISORY PANEL/PNL SAF 20		CB	53'-0"	Supervisory Panel

2. OUTLIER ISSUE DEFINITION

a. Identify all the screening guidlines which are not met.

Mechanical and Electrical Equipment: Anchoage

b. Describe all the reasons for the outlier.

Panel not anchored on the back side.

3. PROPOSED METHOD OF OUTLIER RESOLUTION (OPTIONAL)

Install anchorage. **COMPLETE:** Anchorage installed per Type 1 Change No. 94-3-163 CPR, completed on 11-15-94.

4. CERTIFICATION

The information on this OSVS is, to the best of our knowledge and belief, correct and accurate, and resolution of the outlier issues listed will satisfy the requirements for this item of equipment to be verified for seismic adequacy.

Print Name	Signature	Date
M Lakis	M Lakis	10/28/95
Paul Smith	[illegible]	11/2/95

OUTLIER SEISMIC VERIFICATION SHEET (OSVS)

1. OUTLIER IDENTIFICATION, DESCRIPTION, AND LOCATION

Equipment:

I.D. Number	Cls	Bldg	Elev	Description
SWGR 31	2	CB	15'-0"	480V Switchgear 31
SWGR 32	2	CB	15'-0"	480V Switchgear 32

2. OUTLIER ISSUE DEFINITION

a. Identify all the screening guidlines which are not met.

Mechanical and Electrical Equipment: Anchoage, Caveats

b. Describe all the reasons for the outlier.

Overhead trolley not secure.

Seismic capacity of adjacent service transfomers anchorage unknown and may be an interaction hazard.

3. PROPOSED METHOD OF OUTLIER RESOLUTION (OPTIONAL)

Secure trolley.

Obtain as-builds of transformer anchorage when accessible and perform GIP calc to verify seismic adequacy of the anchorage.

4. CERTIFICATION

The information on this OSVS is, to the best of our knowledge and belief, correct and accurate, and resolution of the outlier issues listed will satisfy the requirements for this item of equipment to be verified for seismic adequacy.

Print Name	Signature	Date
M Lakis	M Lakis	10/28/95
Paul Smith	[signature]	11/2/95

OUTLIER SEISMIC VERIFICATION SHEET (OSVS)

1. OUTLIER IDENTIFICATION, DESCRIPTION, AND LOCATION

Equipment:

I.D. Number	Cls	Bldg	Elev	Description
TE-126	19	VC	46'-0"	Regen Htx Chg Flw Temp
TE-1319	19	VC	60'-0"	Compensating TE
TE-1329	19	VC	60'-0"	Upper Tap Compensating TE
CSAHRG1	21	VC	68'-0"	Regen Htx 31

2. OUTLIER ISSUE DEFINITION

a. Identify all the screening guidlines which are not met.

Mechanical and Electrical Equipment: Other

b. Describe all the reasons for the outlier.

Inaccessible.

3. PROPOSED METHOD OF OUTLIER RESOLUTION (OPTIONAL)

Schedule for walkdown when equipment is to be maintained.

CSAHRG1, review vendor drawings and compare to similar heat exchangers that were walked down to determine seismic adequacy, then verify review input when component access is available.

4. CERTIFICATION

The information on this OSVS is, to the best of our knowledge and belief, correct and accurate, and resolution of the outlier issues listed will satisfy the requirements for this item of equipment to be verified for seismic adequacy.

Print Name	Signature	Date
A. E. PAL		10/24/95
Paul Smith		11/2/95
M Lakis	M Lakis	10/28/95
H. JOHNSON.		11/3/95.

ATOMETRICS

OUTLIER SEISMIC VERIFICATION SHEET (OSVS)

1. OUTLIER IDENTIFICATION, DESCRIPTION, AND LOCATION

Equipment:

I.D. Number	Cls	Bldg	Elev	Description
Rack C-11	20	CB	53'-0"	CCR Rack

2. OUTLIER ISSUE DEFINITION

a. Identify all the screening guidlines which are not met.

Mechanical and Electrical Equipment: Anchorage

b. Describe all the reasons for the outlier.

Rack not anchored. Base channel not bolted.

3. PROPOSED METHOD OF OUTLIER RESOLUTION (OPTIONAL)

Provide adequate anchorage - refueling outage MOD required.

4. CERTIFICATION

The information on this OSVS is, to the best of our knowledge and belief, correct and accurate, and resolution of the outlier issues listed will satisfy the requirements for this item of equipment to be verified for seismic adequacy.

Print Name	Signature	Date
M Lakis	M Lakis	10/28/95
Paul Smith	Paul	11/2/95

OUTLIER SEISMIC VERIFICATION SHEET (OSVS)

1. OUTLIER IDENTIFICATION, DESCRIPTION, AND LOCATION

Equipment:

I.D. Number	Cls	Bldg	Elev	Description
Rack F-7	20	CB	53'-0"	CCR Rack

2. OUTLIER ISSUE DEFINITION

a. Identify all the screening guidlines which are not met.

Mechanical and Electrical Equipment: Interaction

b. Describe all the reasons for the outlier.

Adjacent cabinet Rack F-6 not attached to Rack F-7 and F-7 has essential relays mounted in it.

3. PROPOSED METHOD OF OUTLIER RESOLUTION (OPTIONAL)

Connect cabinets together.

4. CERTIFICATION

The information on this OSVS is, to the best of our knowledge and belief, correct and accurate, and resolution of the outlier issues listed will satisfy the requirements for this item of equipment to be verified for seismic adequacy.

Print Name	Signature	Date
MLakis	M Lakis	10/28/95
Paul Smith	Paul	11/2/95

OUTLIER SEISMIC VERIFICATION SHEET (OSVS)

1. OUTLIER IDENTIFICATION, DESCRIPTION, AND LOCATION

Equipment:

I.D. Number	Cls	Bldg	Elev	Description
Rack G-2	20	CB	53'-0"	CCR Rack

2. OUTLIER ISSUE DEFINITION

a. Identify all the screening guidlines which are not met.

Essential Relays: Mounting

b. Describe all the reasons for the outlier.

Relay LC-112C/X loose.

3. PROPOSED METHOD OF OUTLIER RESOLUTION (OPTIONAL)

Tighten relays. **COMPLETE:** Relays tightened.

4. CERTIFICATION

The information on this OSVS is, to the best of our knowledge and belief, correct and accurate, and resolution of the outlier issues listed will satisfy the requirements for this item of equipment to be verified for seismic adequacy.

Print Name	Signature	Date
M Lakis	M Lakis	10/28/95
Paul Smith	Paul Smith	11/2/95

OUTLIER SEISMIC VERIFICATION SHEET (OSVS)

1. **OUTLIER IDENTIFICATION, DESCRIPTION, AND LOCATION**

Equipment:

I.D. Number	Cls	Bldg	Elev	Description
RACK G-3	20	CB	53'-0"	CCR Rack

2. **OUTLIER ISSUE DEFINITION**

a. Identify all the screening guidlines which are not met.

Essential Relays: Mounting

b. Describe all the reasons for the outlier.

Relays ST1, ST11, and 2-SI-DI common mounting plate loose.

3. **PROPOSED METHOD OF OUTLIER RESOLUTION (OPTIONAL)**

Tighten mounting plate. **COMPLETE:** Mounting plate tightened.

4. **CERTIFICATION**

The information on this OSVS is, to the best of our knowledge and belief, correct and accurate, and resolution of the outlier issues listed will satisfy the requirements for this item of equipment to be verified for seismic adequacy.

Print Name	Signature	Date
M Lakis	M Lakis	10/28/95
Paul Smith	Paul Smith	11/2/95

OUTLIER SEISMIC VERIFICATION SHEET (OSVS)

1. OUTLIER IDENTIFICATION, DESCRIPTION, AND LOCATION

Equipment:

I.D. Number	Cls	Bldg	Elev	Description
TE-411B	19	VC	46'-0"	Loop 31 Cold Leg Temp

2. OUTLIER ISSUE DEFINITION

a. Identify all the screening guidlines which are not met.

Mechanical and Electrical Equipment: Interaction

b. Describe all the reasons for the outlier.

Unistrut from nearby support less than 1" away. Potential interaction hazard.

3. PROPOSED METHOD OF OUTLIER RESOLUTION (OPTIONAL)

Evaluate pipe movement.

4. CERTIFICATION

The information on this OSVS is, to the best of our knowledge and belief, correct and accurate, and resolution of the outlier issues listed will satisfy the requirements for this item of equipment to be verified for seismic adequacy.

Print Name	Signature	Date
M Lakis	M Lakis	10/28/95
Paul Smith	Paul	11/2/95

OUTLIER SEISMIC VERIFICATION SHEET (OSVS)

1. OUTLIER IDENTIFICATION, DESCRIPTION, AND LOCATION

Equipment:

I.D. Number	Cls	Bldg	Elev	Description
TE-641	19	VC	46'-0"	RHR Htx 32 Outlet Temp

2. OUTLIER ISSUE DEFINITION

a. Identify all the screening guidlines which are not met.

Mechanical and Electrical Equipment: Interaction

b. Describe all the reasons for the outlier.

3" diameter pipe only 1" away.

3. PROPOSED METHOD OF OUTLIER RESOLUTION (OPTIONAL)

Evaluate pipe movement.

4. CERTIFICATION

The information on this OSVS is, to the best of our knowledge and belief, correct and accurate, and resolution of the outlier issues listed will satisfy the requirements for this item of equipment to be verified for seismic adequacy.

Print Name	Signature	Date
M Lakis	M Lakis	10/28/95
Paul Smith	[illegible]	11/2/95

OUTLIER SEISMIC VERIFICATION SHEET (OSVS)

1. OUTLIER IDENTIFICATION, DESCRIPTION, AND LOCATION

Equipment:

I.D. Number	Cls	Bldg	Elev	Description
T1	0	CB	53'-0"	Cntrl Rm HVAC Thermostat

2. OUTLIER ISSUE DEFINITION

a. Identify all the screening guidlines which are not met.

Mechanical and Electrical Equipment: Interaction, Other

b. Describe all the reasons for the outlier.

Thermostat is Equipment Class 0, therefore, by definition is an outlier. Component judged to be seismically adequate except that the Thermostat is mounted near a potential interaction hazard (wall map).

3. PROPOSED METHOD OF OUTLIER RESOLUTION (OPTIONAL)

Adequately secure adjacent map, relocate map, or relocate thermostat.

4. CERTIFICATION

The information on this OSVS is, to the best of our knowledge and belief, correct and accurate, and resolution of the outlier issues listed will satisfy the requirements for this item of equipment to be verified for seismic adequacy.

Print Name	Signature	Date
M Lakis	M Lakis	10/28/95
H. JOHNSON.	[illegible]	11/3/95

OUTLIER SEISMIC VERIFICATION SHEET (OSVS)

1. OUTLIER IDENTIFICATION, DESCRIPTION, AND LOCATION

Equipment:

I.D. Number	Cls	Bldg	Elev	Description
AREA-1	N/A	VC	46'-0"	PASS Form
AREA-2	N/A	VC	68'-0"	PASS Form
AREA-3	N/A	VC	95'-0"	PASS Form
AREA-4	N/A	PP	35'-0"	PASS Form
AREA-5	N/A	CB	53"-0"	PASS Form

2. OUTLIER ISSUE DEFINITION

a. Identify all the screening guidlines which are not met.

Cable and Conduit Raceways: Inclusion Rules

b. Describe all the reasons for the outlier.

The following areas require completion of the PASS forms to complete the documention of the cable tray and conduit raceway evaluations:

1. VC Elev. 46'-0"
2. VC Elev. 68'-0"
3. VC Elev. 95'-0"
4. PP Elev. 35'-0"
5. CB Elev. 53"-0"

3. PROPOSED METHOD OF OUTLIER RESOLUTION (OPTIONAL)

Walkdown areas and complete the PASS forms when areas are accessible.

4. CERTIFICATION

The information on this OSVS is, to the best of our knowledge and belief, correct and accurate, and resolution of the outlier issues listed will satisfy the requirements for this item of equipment to be verified for seismic adequacy.

Print Name	Signature	Date
Paul Smith	[signature]	11/2/95
H. Johnson	[signature]	11/3/95

OUTLIER SEISMIC VERIFICATION SHEET (OSVS)

1. OUTLIER IDENTIFICATION, DESCRIPTION, AND LOCATION

Equipment:

I.D. Number	Cls	Bldg	Elev	Description
PNL PY5	20	PP	34'-0"	Deluge Control Panel

2. OUTLIER ISSUE DEFINITION

a. Identify all the screening guidlines which are not met.

Mechanical and Electrical Equipment: Interaction

b. Describe all the reasons for the outlier.

Panel latch inoperative.

3. PROPOSED METHOD OF OUTLIER RESOLUTION (OPTIONAL)

Repair or replace latch. **COMPLETE:** Latch repaired.

4. CERTIFICATION

The information on this OSVS is, to the best of our knowledge and belief, correct and accurate, and resolution of the outlier issues listed will satisfy the requirements for this item of equipment to be verified for seismic adequacy.

Print Name	Signature	Date
M Lakis	M Lakis	10/28/95
H. JOHNSON.	[illegible]	11/3/95

APPENDIX H

SCREENING EVALUATION WORK SHEETS
(SEWS)

(These are maintained by NYPA and are referred to here for completeness)