TITLE: OFFSITE DOSE CALCULATION MANUAL REV. 12

WRITTEN BY: _____

REVIEWED BY: _____

PORC REVIEW: _____

APPROVED BY: _____

EFFECTIVE DATE: _____

9908100253 990728
PDR ADOCK 05000286
P PDR

INDIAN POINT 3

OFFSITE DOSE CALCULATION MANUAL

Revision 12

ODCM

TABLE OF CONTENT

		PAGE
Table of Contents		i
List of Tables		iv
List of Figures		vi
References		vii
PART - I	**RADIOLOGICAL EFFLUENT CONTROLS**	
Chapter 1.0	DEFINITIONS	1-1
Chapter 2/3.0	RADIOLOGICAL EFFLUENT CONTROLS AND SURVEILLANCE REQUIREMENTS	
	2/3.1 Radioactive Liquid Effluent Monitoring Instrumentation	2/3-1
	2/3.2 Radioactive Gaseous Effluent Monitoring Instrumentation	2/3-7
	2/3.3 Radioactive Liquid Effluents	2/3-12
	2/3.3.1 Liquid Effluent Concentration	2/3-12
	2/3.3.2 Dose From Liquid Effluents	2/3-15
	2/3.3.3 Liquid Radwaste Treatment System	2/3-16
	2/3.4 Radioactive Gaseous Effluents	2/3-17
	2/3.4.1 Gaseous Effluent Dose Rates	2/3-17
	2/3.4.2 Dose From Noble Gases	2/3-21
	2/3.4.3 Dose From Iodine-131, Tritium, and Radionuclides in Particulate Form	2/3-22
	2/3.4.4 Gaseous Radwaste Treatment System	2/3-23
	2/3.5 NOT USED	
	2/3.6 Total Dose	2/3-24
	2/3.7 Radiological Environmental Monitoring Program	2/3-26
	2/3.8 Land Use Census	2/3-37
	2/3.9 Interlaboratory Comparison Program	2/3-38
Chapter 4.0	BASES	4-1

ODCM

TABLE OF CONTENT

		PAGE
Chapter 5.0	REPORTING REQUIREMENTS	
	5.1 Semiannual Radioactive Effluent Release Report	5-1
	5.2 Annual Radiological Environmental Operating Report	5-4
	5.3 Major Changes To Radioactive Liquid, Gaseous and Solid Waste Treatment Systems	5-5
PART - II	**OFFSITE DOSE CALCULATION MANUAL**	
Chapter 1.0	INSTRUMENTATION AND CONTROL	
	1.1 Effluent Monitoring System Description	1-1
	1.2 Setpoints	1-1
	1.2.1 Setpoints for Gaseous Effluent Monitors	1-1
	1.2.2 Setpoints for Liquid Effluent Monitors	1-2
Chapter 2.0	LIQUID EFFLUENTS	
	2.1 Liquid Effluent Releases - General Information	2-1
	2.2 Liquid Effluent Concentrations	2-5
	2.3 Liquid Effluent Dose Calculation Requirements	2-8
	2.4 Dose Methodology (Computer Calculation)	2-9
	2.5 Backup Dose Methodologies	2-12
	2.6 Site Specific Bioaccumulation and Dose Factors	2-12
Chapter 3.0	GASEOUS EFFLUENTS	
	3.1 Gaseous Effluents Releases-General Information	3-1
	3.2 Gaseous Effluent Dose Calculation Requirements	3-5
	3.3 Dose Calculations Methodology (Computer Calculation)	3-6
	3.3.1 Instantaneous Dose Rates - Noble Gas Releases	3-6
	3.3.2 Instantaneous Dose Rates - Radioiodine 131 and Particulate Releases	3-8
	3.3.3 Time Average Dose - Noble Gas Releases	3-9

ODCM

TABLE OF CONTENT

		PAGE
	3.3.4 Time Average Dose - Radioiodines and Particulates	3-12
	3.4 Backup Dose Methodologies	3-21
	3.4.1 Instantaneous Dose Rates - Noble Gas Releases	3-21
	3.4.2 Instantaneous Dose Rates - Radioiodine 131 and Particulate Release	3-22
	3.4.3 Time Average Dose - Noble Gas Releases	3-22
	3.4.4 Time Average Dose - Radioiodine 131 and Particulate Releases	3-24
	3.5 Calculation of Meteorological Dispersion Factors	3-24
	3.6 Justification for the Use of the Finite Cloud Assumption for Assessing Site Boundary Dose	3-28
	Appendix 3-A Calculation of Allowable Release Rates	3-79
Chapter 4.0	SAMPLE LOCATIONS	4-1
Appendix B -	Detection Limits	4-7

LIST OF TABLES

		PAGE
PART - I	**RADIOLOGICAL EFFLUENT CONTROLS**	
2.1-1	Radioactive Liquid Effluent Monitoring Instrumentation	2/3-2
3.1-1	Radioactive Liquid Effluent Monitoring Instrumentation Surveillance Requirements	2/3-5
2.2-1	Radioactive Gaseous Effluent Monitoring Instrumentation	2/3-8
3.2-1	Radioactive Gaseous Effluent Monitoring Instrumentation Surveillance Requirements	2/3-10
3.3-1	Radioactive Liquid Waste Sampling and Analysis Program	2/3-13
3.4-1	Radioactive Gaseous Waste Sampling and Analysis Program	2/3-18
2.7-1	Radiological Environmental Monitoring Program	2/3-28
2.7-2	Reporting Levels For Radioactivity Concentrations In Environmental Samples	2/3-34
3.7-1	Detection Capabilities For Environmental Sample Analysis	2/3-35
PART - II	**ODCM**	
1-1	Effluent Monitoring System Data	1-5
2-1	Adult Liquid Effluent Dose Factors	2-14
2-2	Teen Liquid Effluent Dose Factors	2-16
2-3	Child Liquid Effluent Dose Factors	2-18
2-4	Liquid Effluent Bioaccumulation Factors	2-20
3-1a	Inhalation Dose Factors for Adult	3-30
3-1b	Inhalation Dose Factors for Teen	3-32
3-1c	Inhalation Dose Factors for Child	3-34
3-1d	Inhalation Dose Factors for Infant	3-36
3-2	Ground Plan Dose Factors	3-38
3-3a	Ingestion Dose Factors for Adult	3-40
3-3b	Ingestion Dose Factors for Teen	3-42
3-3c	Ingestion Dose Factors for Infant	3-44
3-3d	Ingestion Dose Factors for Child	3-46
3-4	Total Body Dose Factors (Ki) from Noble Gases (Gamma)	3-48
3-5	Skin Dose Factors (Li) from Noble Gases (Beta)	3-49
3-6	Air Dose Factors (Mi) from Noble Gases (Gamma)	3-50

LIST OF TABLES

		PAGE
3-7	Air Dose Factors (Ni) from Noble Gases (Beta)	3-51
3-8	Dose Factors for Site Boundary Using Standard Isotope Mixture	3-52
3-9	Locations of Site Boundary and Nearest Residence	3-54
3-10a	Adult Inhalation Ri(I)	3-55
3-10b	Teen Inhalation Ri(I)	3-57
3-10c	Child Inhalation Ri(I)	3-59
3-10d	Infant Inhalation Ri(I)	3-61
3-11a	Adult Ingestion Ri(V)	3-63
3-11b	Teen Ingestion Ri(V)	3-65
3-11c	Child Ingestion Ri(V)	3-67
3-12a	Adult Grass/Cow/Milk Ri(C)	3-69
3-12b	Teen Grass/Cow/Milk Ri(C)	3-71
3-12c	Child Grass/Cow/Milk Ri(C)	3-73
3-12d	Infant Grass/Cow/Milk Ri(C)	3-75
3-13	Ground Plane Dose Factors Ri(G) and Ri(S)	3-77
4-1	Indian Point Station - Environmental Sampling Station Points	4-4

LIST OF FIGURES

		PAGE
PART - I	**RADIOLOGICAL EFFLUENT CONTROLS**	
Figure 1-1	Map Defining Unrestricted Areas for Radioactive Gaseous and Liquid Effluents	1-4
PART - II	**ODCM**	
Figure 1-1	Map Defining Unrestricted Areas for Radioactive Gaseous and Liquid Release Points	1-4
Figure 2-1	Radioactive Liquid Waste Effluent System Flow Diagram	2-21
Figure 3-1	Gaseous Radioactive Waste Effluent System Flow Diagram	3-88
Figure 4-1	Radiological Environmental Monitoring Sampling Stations - Near Site	4-2
Figure 4-2	Radiological Environmental Monitoring Sampling Stations - Away from Site	4-3

REFERENCES

1. U.S. Nuclear Regulatory Commission, "Preparation of Radiological Effluent Technical Specifications for Nuclear Power Plants", USNRC Report NUREG-0133, Washington D.C. 20555, October 1978.

2. M.E. Wrenn and J. W. Lentsch, "The Fate of Gamma-Emitting Radionuclides Released into the Hudson River Estuary and an Evaluation of Their Environmental Significance", New York University Medical Center, Institute of Environmental Medicine, 1974.

3. Regulatory Guide 1.109, "Calculation of Annual Doses to Man from Routine Releases of Reactor Effluents for the Purpose of Evaluating Compliance with 10CFR50, Appendix I, Revision 1, USNRC Washington D.C. 20555, October 1977.

4. "An Evaluation to Demonstrate the Compliance of the Indian Point Reactors with the Design Objectives of 10CFR50, Appendix I", Consolidated Edison Company of New York, Inc. and Power Authority of the State of New York, February 1977.

5. U.S. Nuclear Regulatory Commission, "XOQDOQ Program for the Meteorological Evaluation of Routine Effluent Releases at Nuclear Power Stations", USNRC Report NUREG-0324, Washington D.C. 10555, September 1977.

6. "Semi-Annual Report of Radioactivity in Solid Wastes and Releases of Radioactive Materials in Liquid and Gaseous Effluents for Indian Point Three", Power Authority of the State of New York, January 1, 1978 to June 30, 1980.

7. "Environmental Technical Specification Requirements for Indian Point Nuclear Generating Unit Number 3", Power Authority of the State of New York, December 12, 1975.

8. U.S. Nuclear Regulatory Commission, "Radiological Effluent Technical Specification for PWR's", USNRC Report NUREG-0472, Washington D.C. 20555.

9. Regulatory Guide 1,113, "Estimating Aquatic Dispersion of Effluents from Accidental and Routine Reactor Releases for the Purpose of Implementing Appendix ", Revision 1, USNRC, Washington D.C. 10555, October 1977.

10. AP-11 - Indian Point No. 3 Nuclear Power Plant Administrative Procedure, "Radioactive Effluents Control Program".

11. NUREG/CR-4007, 1984, "Lower Limit of Detection: Definition and Elaboration of a Proposed Position for Radiological Effluent and Environmental Measurements".

12. New York University Medical Center, "Radioecological Studies of the Hudson River Progress Report (1986-1987)", N.Y.U. New York, New York 10016, March 1988.

13. IPI-DM-153, "Antimony Dose Factors", IPS Memorandum to M. Kerns from D. Mayer, August 8, 1988.

14. New York University Medical Center, "Radiological Studies of the Hudson River Progress Report (1987-1988)", N.Y.U. New York, New York 10016, September 1988.

15. USNRC Regulatory Guide 1.111, "Methods of Estimating Atmospheric Transport and Dispersion of Gaseous Effluents in Routine Releases from Light-Water-Cooled Reactors," U.S. Nuclear Regulatory Commission (October 1977, Rev. 1).

16. CRE Computer Code AEOLUS-3, "A Computer Code for the Determination of Atmospheric Dispersion and Deposition of Nuclear Power Plant Effluents During Continuous, Intermittent and Accident Conditions in Open-Terrain Sites, Coastal Sites and Deep-River Valleys," RAD-004, Version 1, Level 2 (June 1991).

REFERENCES

17. CRE Engineering Calculation IP3-CALC-RAD-00001, "IP3 - Revised ODCM Atmospheric Dispersion Parameters (Multi-Year Hourly Data, Mixed-Mode Releases and Valley Effects)," by John N. Hamawi (July 1991).

18. USNRC Regulatory Guide 1.23, "Onsite Meteorological Programs," U.S. Nuclear Regulatory Commission (2/17/72) (and proposed revisions).

19. USNRC Regulatory Guide 1.145, "Atmospheric Dispersion Models for Potential Accident Consequence Assessments at Nuclear Power Plants," U.S. Nuclear Regulatory Commission (August 1979).

20. D. H. Slade, Ed., "Meteorology and Atomic Energy - 1968," USAEC, TID-24190 (1968).

21. WCRE-93-157, "IP3-Annual Average Atmospheric Dispersion and Deposition factors for Ground-Level Release, December , 1993 Memorandum Hamawi to Mayer.

1.0 DEFINITIONS

1.1 ACTION

That part of a Control that prescribes remedial measures required under designated conditions.

1.2 CHANNEL CALIBRATION

Adjustment of channel output such that it responds, with acceptable range and accuracy, to known values of the parameter which the channel measures. Calibration shall encompass the entire channel, including alarm or trip, and shall be deemed to include the channel functional test.

1.3 CHANNEL CHECK

A qualitative determination of acceptable operability by observation of channel behavior during operation. This determination shall include, where possible, comparison of the channel with other independent channels measuring the same variable.

1.4 CHANNEL FUNCTIONAL TEST

Injection of a simulated signal into the channel to verify that it is operable, including alarm and/or trip initiating action.

1.5 EFFLUENT CONCENTRATION

The EFFLUENT CONCENTRATION is that concentration of a radionuclide specified in 10 CFR 20, Table 2 of Appendix B.

1.6 GASEOUS RADWASTE TREATMENT SYSTEM

A GASEOUS RADWASTE TREATMENT SYSTEM is any system designed and installed to reduce radioactive gaseous effluents by collecting primary coolant system offgases from the primary system and providing for delay or holdup for the purpose of reducing the total radioactivity prior to release to the environment.

1.7 LIQUID RADWASTE TREATMENT SYSTEM

A LIQUID RADWASTE TREATMENT SYSTEM is any system designed and installed to reduce radioactive liquid effluents by collecting liquid radwaste and providing for processing capability and/or holdup for the purpose of reducing and monitoring the total radioactivity prior to release to the environment.

1.8 MAXIMUM PERMISSIBLE CONCENTRATION WATER (MPCW)

MPCW is that concentration of a radionuclide equal to 10 times the concentration of a radionuclide specified in 10 CFR 20, Appendix B, Table 2, Column 2.

1.9 MEMBER(S) OF THE PUBLIC

MEMBER(S) OF THE PUBLIC means any individual except when that individual is receiving an occupational dose.

1.10 OCCUPATIONAL DOSE

Occupational dose means the dose received by an individual in the course of employment in which the individual's assigned duties involve exposure to radiation or to radioactive material from licensed and unlicensed sources of radiation, whether in the possession of the licensee or other person. Occupational dose does not include dose received from background radiation, from any medical administration the individual has received, from exposure administered to individuals administered radioactive material and released in accordance with 35.75, from voluntary participation in medical research programs, or as a member of the public.

1.11 OFFSITE DOSE CALCULATION MANUAL (ODCM)

The OFFSITE DOSE CALCULATION MANUAL shall contain the current methodology and parameters used in the calculation of offsite doses resulting from radioactive gaseous and liquid effluents, in the calculation of gaseous and liquid effluent monitoring Alarm/Trip Setpoints, and in the conduct of the Radiological Environmental Monitoring Program. The ODCM shall also contain (1) the Radioactive Effluent Controls and Radiological Environmental Monitoring Programs required by Appendix A Technical Specification 6.8.4 and (2) descriptions of the information that should be included in the Annual Radiological Environmental Operating and Radioactive Effluent Release Reports required by Appendix A Technical Specifications 4.3.2.1 and 4.3.2.2.

1.12 OPERABLE - OPERABILITY

Properly installed in the system and capable of performing the intended functions in the intended manner as verified by testing and tested at the frequency required by the Radiological Effluent Controls. Implicit in this definition shall be the assumption that all necessary attendant controls, electrical power source, cooling or seal water, lubrication or other auxiliary equipment that are required for the system, subsystem, train, component or device to perform its function(s) are also capable of performing their related support function(s).

1.13 PROCESS CONTROL PROGRAM (PCP)

The PROCESS CONTROL PROGRAM shall contain the current formulas, sampling, analyses, tests, and determinations to be made to ensure that the processing and packaging of solid radioactive wastes based on demonstrated processing of actual or simulated wet solid wastes will be accomplished in such a way as to assure compliance with 10 CFR Parts 20, 61 and 71 and Federal and State regulations and other requirements governing the disposal of solid radioactive waste.

1.14 PURGE - PURGING

PURGE or PURGING is the controlled process of discharging air or gas from a confinement in such a manner that replacement air or gas is required to purify the confinement.

1.15 RATED THERMAL POWER (RTP)

RTP shall be a total reactor core heat transfer rate to the reactor coolant of 3025 MWt. ("Rated Power" and "Rated Thermal Power" are used interchangeably throughout the Technical Specifications).

1.16 SITE BOUNDARY

The SITE BOUNDARY (see Figure 1-1) means that line beyond which the land or property is not owned, leased, or otherwise controlled by either site licensee.

1.17 SOURCE CHECK

A SOURCE CHECK shall be the qualitative assessment of channel response when the channel sensor is exposed to a source of increased radioactivity.

1.18 THERMAL POWER

THERMAL POWER shall be the total reactor core heat transfer rate to the reactor coolant.

1.19 UNRESTRICTED AREA

An UNRESTRICTED AREA (see Figure 1-1) means an area, access to which is neither limited nor controlled by either site licensee, but the UNRESTRICTED AREA does not include areas over water bodies. The concept of UNRESTRICTED AREAS, established at or beyond the SITE BOUNDARY, is utilized in the radioactive controls program to keep levels of radioactive materials in liquid and gaseous effluents as low as is reasonably achievable, pursuant to 10 CFR 50.36a.

1.20 VENTILATION EXHAUST TREATMENT SYSTEM

A VENTILATION EXHAUST TREATMENT SYSTEM is any system designed and installed to reduce gaseous radioiodine or radioactive material in particulate form in effluents by passing ventilation or vent exhaust gases through charcoal absorbers and/or HEPA filters for the purpose of removing iodines or particulates from the gaseous exhaust stream prior to the release to the environment. Such a system is not considered to have any effect on noble gas effluents. Engineered Safety Feature (ESF) atmospheric cleanup systems are not considered to be VENTILATION EXHAUST TREATMENT SYSTEM components.

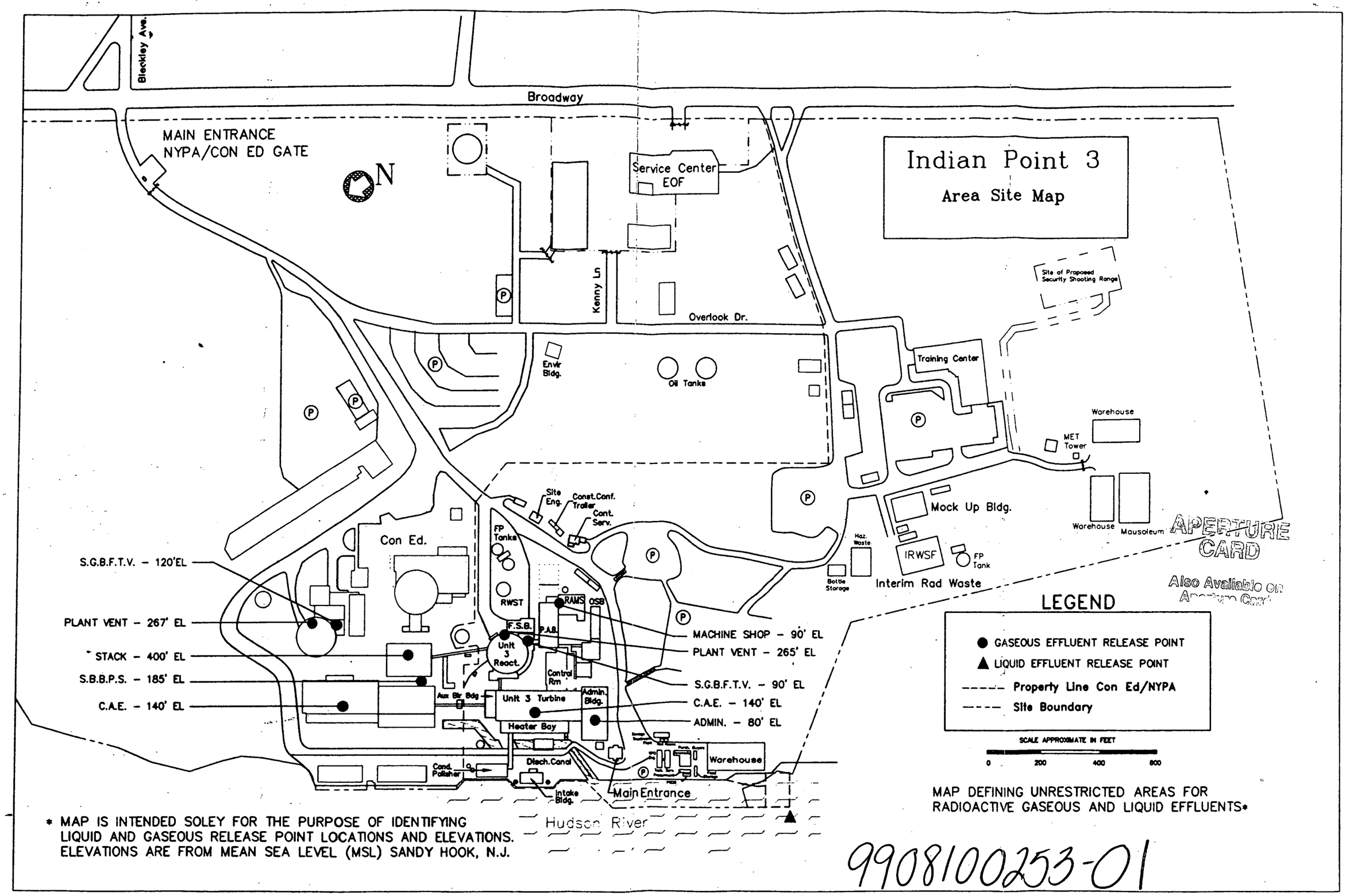

MAP DEFINING UNRESTRICTED AREAS FOR RADIOACTIVE GASEOUS AND LIQUID EFFLUENTS*

* MAP IS INTENDED SOLEY FOR THE PURPOSE OF IDENTIFYING LIQUID AND GASEOUS RELEASE POINT LOCATIONS AND ELEVATIONS. ELEVATIONS ARE FROM MEAN SEA LEVEL (MSL) SANDY HOOK, N.J.

9908100253-01

2/3.0 RADIOLOGICAL EFFLUENT CONTROLS AND SURVEILLANCE REQUIREMENTS

2.1 Radioactive Liquid Effluent Monitoring Instrumentation

CONTROL:

In accordance with Appendix A Technical Specification 6.8.4.a.1, the radioactive liquid effluent monitoring instrumentation channels shown in Table 2.1-1 shall be OPERABLE with their alarm/trip setpoints set to ensure that the limits of Control 2.3.1 are not exceeded. The alarm/trip setpoints of these channels shall be determined and adjusted in accordance with the methodology and parameters in the OFFSITE DOSE CALCULATION MANUAL (ODCM).

APPLICABILITY: As shown in Table 2.1-1.

ACTION:

A. With a radioactive liquid effluent monitoring instrumentation channel alarm/trip setpoint less conservative than required by the above Control, immediately suspend the release of radioactive liquid effluents monitored by the affected channel, or declare the channel inoperable, or change the setpoint so it is acceptably conservative.

B. With less than the minimum number of radioactive liquid effluent monitoring instrumentation channels OPERABLE, take the ACTION shown in Table 2.1-1. Exert best efforts to return the instruments to OPERABLE status within 30 days and if unsuccessful, explain in the next Annual Radioactive Effluent Release Report, pursuant to Reporting Requirement 5.1, why the inoperability was not corrected within this time frame.

C. Report all deviations in the Annual Radioactive Effluent Release Report.

3.1 SURVEILLANCE REQUIREMENTS:

Each radioactive liquid effluent monitoring instrumentation channel shall be demonstrated OPERABLE by performance of the CHANNEL CHECK, SOURCE CHECK, CHANNEL CALIBRATION and CHANNEL FUNCTIONAL TEST operations at the frequencies shown in Table 3.1-1.

TABLE 2.1-1

RADIOACTIVE LIQUID EFFLUENT MONITORING INSTRUMENTATION		
INSTRUMENT	**MINIMUM CHANNELS OPERABLE***	**ACTION**
1. GROSS RADIOACTIVITY MONITORS PROVIDING ALARM AND AUTOMATIC TERMINATION OF RELEASE		
a. Liquid Radwaste Effluent Line** (R-18 and R-61)	(1)	1
b. Steam Generator Blowdown Effluent Line (R-19)	(1)	2
2. GROSS BETA OR GAMMA RADIOACTIVITY MONITORS PROVIDING ALARM BUT NOT PROVIDING AUTOMATIC TERMINATION OF RELEASE		
a. Service Water System Effluent Line (R-16A, R-16B, R-23)	(1)	3
3. FLOW RATE MEASUREMENT DEVICES		
a. Liquid Radwaste Effluent Line	(1)	4
b. Steam Generator Blowdown Effluent Line	(1)	4
4. RADIOACTIVITY RECORDERS***		
a. Liquid Radwaste Effluent Line	(1)	1
b. Steam Generator Blowdown Effluent Line	(1)	2
5. TANK LEVEL INDICATING DEVICES****		
a. Refueling Water Storage Tank	(1)	5
b. Primary Water Storage Tank	(1)	5
c. Monitor Tank #31	(1)	5
d. Monitor Tank #32	(1)	5

TABLE 2.1-1 *(Continued)*

TABLE NOTATION

* During release by the pathway, channels shall be OPERABLE and in service during such release on a continuous, uninterrupted basis. Except that outages are permitted, within the time frame and limitations of the specified action, for the purpose of maintenance of required tests, checks and calibration.

** The condensate polisher regenerative waste release path does not need to be monitored unless a primary to secondary side leak is present.

*** Required only if alarm/trip set point is based on recorder-controller.

**** Tanks included in this Control are those outdoor tanks that are not surrounded by liners, dikes, or walls capable of holding the tank contents and do not have tank overflows and surrounding area drains connected to the liquid radwaste treatment system.

TABLE 2.1-1 *(Continued)*

TABLE NOTATION

ACTION 1 - With the number of channels OPERABLE less than required by the Minimum Channels OPERABLE requirement, effluent releases may continue provided that prior to initiating a release:

a. At least two independent samples are analyzed in accordance with Radiological Effluent Control Surveillance Requirement 3.3.1.A,

and

b. At least two technically qualified members of the Facility Staff independently verify the release rate calculations and discharge line valving:

Otherwise, suspend release of radioactive effluents via this pathway.

ACTION 2 - With the number of channels OPERABLE less than required by the Minimum Channels OPERABLE requirement, effluent releases via this pathway may continue provided grab samples are analyzed either for principal gamma emitters or for gross radioactivity (beta or gamma) at a lower limit of detection of at least 5×10^{-7} microcurie/ml (as Cs-137):

a. At least once per 12 hours when the specific activity of the secondary coolant is greater than 0.01 microcurie/gram DOSE EQUIVALENT I-131.

b. At least once per 24 hours when the specific activity of the secondary coolant is less than or equal to 0.01 microcurie/gram DOSE EQUIVALENT I-131.

ACTION 3 - With the number of channels OPERABLE less than required by the Minimum Channels OPERABLE requirement, effluent releases via this pathway may continue provided that, at least once per 12 hours, grab samples are collected and analyzed for gross radioactivity (beta or gamma) at a lower limit of detection of at least 5×10^{-7} microcurie/ml (as Cs-137).

ACTION 4 - With the number of channels OPERABLE less than required by the Minimum Channels OPERABLE requirement, effluent releases via this pathway may continue provided the flow rate is estimated at least once per 4 hours during actual releases. Pump performance curves may be used to estimate flow.

ACTION 5 - With the number of channels OPERABLE less than required by the Minimum Channels OPERABLE requirement, liquid additions to this tank may continue provided the tank liquid level is estimated during all liquid additions to the tank.

TABLE 3.1-1

RADIOACTIVE LIQUID EFFLUENT MONITORING INSTRUMENTATION SURVEILLANCE REQUIREMENTS

INSTRUMENT	CHANNEL CHECK	SOURCE CHECK	CHANNEL CALIBRA-TION	CHANNEL FUNC-TIONAL TEST
1. GROSS RADIOACTIVITY MONITORS PROVIDING ALARM AND AUTOMATIC TERMINATION OF RELEASE				
a. Liquid Radwaste Effluent Line (R-18 and R-61*****)	D*	D*	24M(3)	Q(1)*
b. Steam Generator Blowdown Effluent Line (R-19)	D*	M*	24M(3)	Q(1)*
2. GROSS BETA OR GAMMA RADIOACTIVITY MONITORS PROVIDING ALARM BUT NOT PROVIDING AUTOMATIC TERMINATION OF RELEASE				
a. Service Water System Effluent Line (R-16A and R-16B)	D*	M*	24M(3)	Q(2)*
b. Service Water System Effluent Line (R-23)	D*	M*	18M(3)	Q(2)*
3. FLOW RATE MEASUREMENT DEVICES				
a. Liquid Radwaste Effluent Line	D(4)	N.A.	18M	Q
b. Steam Generator Blowdown Effluent Line	D(4)	N.A.	24M	N.A.
4. RADIOACTIVITY RECORDERS				
a. Liquid Radwaste Effluent Line	D*	N.A.	24M	Q****
b. Steam Generator Blowdown Effluent Line	D*	N.A.	24M	Q****
5. TANK LEVEL INDICATING DEVICES***				
a. Refueling Water Storage Tank	D**	N.A.	18M	18M
b. Primary Water Storage Tank	D**	N.A.	24M	24M
c. Monitor Tank #31	D**	N.A.	18M	18M
d. Monitor Tank #32	D**	N.A.	18M	18M

TABLE 3.1-1 *(Continued)*

TABLE NOTATION

* When this pathway is utilized for releases, with frequency no more than indicated.

** During liquid additions to the tank.

*** Tanks included in this Control are those outdoor tanks that are not surrounded by liners, dikes, or walls capable of holding the tank contents and do not have tank overflows and surrounding area drains connected to the liquid radwaste treatment system.

**** Required only if alarm/trip setpoint is based on recorder-controller.

***** The condensate polisher regenerative waste release path does not need to be monitored unless a primary to secondary leak is present.

(1) The CHANNEL FUNCTIONAL TEST shall also demonstrate that automatic isolation of this pathway and control room alarm annunciation occur if the following condition exists:

1. Instrument indicates measured levels above the alarm/trip setpoint.

(2) The CHANNEL FUNCTIONAL TEST shall also demonstrate that control room alarm annunciation occurs if any of the following conditions exists:

1. Instrument indicates measured levels above the alarm setpoint.

2. Instrument controls not set in operate mode.

(3) Radioactive calibration standards used for CHANNEL CALIBRATIONS shall be traceable to the National Institute of Standards and Technology (NIST) or an aliquot of calibration solution shall be analyzed with instrumentation which is calibrated with NIST traceable standards. (Standards from suppliers who participate in measurement assurance activities with NIST are acceptable).

(4) CHANNEL CHECK shall consist of verifying indication of flow during periods of release. CHANNEL CHECK shall be made at least once per 24 hours on days on which continuous, periodic, or batch releases are made.

D	Daily	M	Monthly
N.A.	Not Applicable	Q	Quarterly
18M	At least once per 18 months.		
24M	At least once per 24 months.		

2.2 RADIOACTIVE GASEOUS EFFLUENT MONITORING INSTRUMENTATION

CONTROL:

In accordance with Appendix A Technical Specification 6.8.4.a.1, the radioactive gaseous effluent monitoring instrumentation channels shown in Table 2.2-1 shall be OPERABLE with their alarm/trip setpoints set to ensure that the limits of Control 2.4.1 are not exceeded. The alarm/trip setpoints of these channels shall be determined and adjusted in accordance with the methodology and parameters in the ODCM.

APPLICABILITY: As shown in Table 2.2-1.

ACTION:

A. With a radioactive gaseous effluent monitoring instrumentation channel alarm/trip setpoint less conservative than required by the above Control, immediately suspend the release of radioactive gaseous effluents monitored by the affected channel or declare the channel inoperable, or change the setpoint so it is acceptably conservative.

B. With less than the minimum number of radioactive gaseous effluent monitoring instrumentation channels OPERABLE, take the ACTION shown in Table 2.2-1. Exert best efforts to return the instruments to OPERABLE status within 30 days and, if unsuccessful, explain in the next Annual Radioactive Effluent Release Report, pursuant to Reporting Requirement 5.1, why the inoperability was not corrected within this time frame.

C. Report all deviations in the Annual Radioactive Effluent Release Report.

3.2 SURVEILLANCE REQUIREMENTS:

Radioactive gaseous effluent monitoring instrumentation channels shall be demonstrated OPERABLE by performance of the CHANNEL CHECK, SOURCE CHECK, CHANNEL CALIBRATION and CHANNEL FUNCTIONAL TEST operations at the frequencies shown in Table 3.2-1.

TABLE 2.2-1

RADIOACTIVE GASEOUS EFFLUENT MONITORING INSTRUMENTATION			
INSTRUMENT	**MINIMUM CHANNELS OPERABLE**	**APPLICABILITY**	**ACTION**
1. WASTE GAS HOLDUP SYSTEM			
a. Noble Gas Activity Monitor-Providing Alarm (R-20)	(1)	**	6
2. CONDENSER AIR EJECTOR			
a. Noble Gas Activity Monitor (R-15)	(1)	*	8
3. ENVIRONMENTAL RELEASE POINTS (PLANT VENT***, ADMIN. BUILDING, CONTROLLED AREA, RAD MACHINE SHOP)			
a. Noble Gas Activity Monitor (R-14, R-27, R-46 and R-59)	(1)	*	8, 11
b. Iodine Sampler	(1)	*	10
c. Particulate Sampler	(1)	*	10
d. Flow Rate Monitor	(1)	*	7
e. Sampler Flow Rate Monitor	(1)	*	7
4. CONTAINMENT PURGE SYSTEM			
a. Containment Noble Gas Activity - Monitor (R-12) Providing Alarm and Automatic Termination of Release	(1)	*	9

TABLE NOTATION

* Channels shall be OPERABLE and in service on a continuous basis during release via this pathway, except that outages are permitted, within the time frame of the specified action for the purpose of maintenance and performance of required tests, checks and calibrations.

** During waste gas holdup system operation (treatment for primary system offgases).

TABLE 2.2-1 *(Continued)*

*** This will also monitor releases from the Vent Header, Auxiliary Building Vents, Fuel Storage Building Vents, and the Rad Waste Area Vent.

ACTION 6 - With the number of channels OPERABLE less than that required by the Minimum Channels OPERABLE requirement, the radioactive content of the receiving gas decay tank shall be determined daily to ensure compliance with Appendix B, Technical Specification 1.3.2.

ACTION 7 - With the number of channels OPERABLE less than required by the Minimum Channels OPERABLE requirement, effluent releases via this pathway may continue provided the flow rate is estimated at least once per 4 hours.

ACTION 8 - With the number of channels OPERABLE less than required by the Minimum Channels OPERABLE requirement, effluent releases via this pathway may continue provided grab samples are taken at least once per 12 hours and these samples are analyzed for gross activity within 24 hours.

ACTION 9 - With the number of channels OPERABLE less than required by the Minimum Channels OPERABLE requirement, immediately suspend PURGING of radioactive effluents via this pathway. During containment building ventilation in the cold shutdown condition, continuous monitoring and automatic termination of release is not required. One continuous monitor at the final release point (plant vent) is sufficient.

ACTION 10 - With the number of channels OPERABLE less than required by the Minimum Channels OPERABLE requirement, effluent releases via the effected pathway may continue provided samples are continuously collected with auxiliary sampling equipment as required in Table 3.4-1.

ACTION 11 - With the number of channels OPERABLE less than that required by the Minimum Channels OPERABLE requirement for the plant vent, the contents of the radwaste gas decay tanks may be released to the environment provided that prior to initiating the release:

a. At least two independent samples of the tank contents are analyzed

and,

b. At least two technically qualified members of the facilities staff independently verify the release rate calculations and discharge valve lineup.

TABLE 3.2-1

RADIOACTIVE GASEOUS EFFLUENT MONITORING INSTRUMENTATION SURVEILLANCE REQUIREMENTS					
INSTRUMENT	CHANNEL CHECK	SOURCE CHECK	CHANNEL CALIBRATION	FUNCTIONAL TEST	MODES IN WHICH SURVEIL-LANCE REQUIRED
1. WASTE GAS HOLDUP SYSTEM					
a. Noble Gas Activity Monitor - Providing Alarm (R-20)	D	M	24M(2)	Q(1)**	*
2. CONDENSER AIR EJECTOR					
a. Noble Gas Activity Monitor (R-15)	D	M	24M(2)	Q(1)**	*
3. ENVIRONMENTAL RELEASE POINTS (PLANT VENT, ADMIN. BUILDING CONTROLLED AREA. VENT, RAD.MACHINE SHOP VENT)					
a. Noble Gas Activity Monitor (R-14, R-27, R-46, and R-59)	D	M	24M(2)	Q(1)**	*
b. Iodine Sampler	W	N.A.	N.A.	N.A.	*
c. Particulate Sampler	W	N.A.	N.A.	N.A.	*
d. Flow Rate Monitor	D	N.A.	18M	Q	*
e. Sampler Flow Rate Monitor	D	N.A.	18M	N.A.	*
4. CONTAINMENT PURGE SYSTEM					
a. Containment Noble Gas Activity Monitor (R-12) - Providing Alarm and Automatic Termination of Release	D	M	24M(2)	Q(1)**	*

TABLE NOTATION

* Surveillance is required at all times except when monitor has been removed from service in accordance with Table 2.2-1.

** Will not include operation of automatic control functions.

TABLE 3.2-1 *(Continued)*

(1) The CHANNEL FUNCTIONAL TEST shall also demonstrate that control room alarm annunciation occurs if any of the following conditions exists:

1. Instrument indicates measured levels above the alarm setpoint.

2. Instrument controls not set in operate mode.

(2) Radioactive Calibration Standards used for CHANNEL CALIBRATIONS shall be traceable to the National Institute of Standards and Technology (NIST) or an aliquot of calibration gas shall be analyzed with instrumentation which is calibrated with NIST traceable standards (standards from suppliers which participate in measurement assurance activities with NIST are acceptable).

D	Daily
M	Monthly
N.A.	Not Applicable
Q	Quarterly
18M	At least once per 18 months.
24M	At least once per 24 months.

2.3 RADIOACTIVE LIQUID EFFLUENTS

2.3.1 LIQUID EFFLUENT CONCENTRATION

CONTROL:

In accordance with Appendix A Technical Specifications 6.8.4.a.2 and 6.8.4.a.3, the concentration of radioactive material released in liquid effluents to UNRESTRICTED AREAS shall be limited to 10 times the EFFLUENT CONCENTRATION values specified in Appendix B, Table 2, Column 2 to 10 CFR 20 for radionuclides other than dissolved or entrained noble gases. For dissolved or entrained noble gases, the concentration shall be limited to 2×10^{-4} microcuries/ml.

APPLICABILITY: At all times.

ACTION:

With the concentration of radioactive material released in liquid effluents to UNRESTRICTED AREAS exceeding the above limits, immediately restore the concentration to within these limits.

3.3.1 SURVEILLANCE REQUIREMENTS:

A. Radioactive liquid wastes shall be sampled and analyzed according to the sampling and analysis program of Table 3.3.1-1.

B. The results of the radioactivity analyses shall be used in accordance with the methodology and parameters in the ODCM to assure that the concentrations at the point of release are maintained within the limits of Control 2.3.1.

TABLE 3.3.1-1

RADIOACTIVE LIQUID WASTE SAMPLING AND ANALYSIS PROGRAM

Liquid Release Type	Sampling Frequency	Minimum Analysis Frequency	Type of Activity Analysis	Lower Limit of Detection (LLD)[a] (uCi/ml)
A. Batch Waste Release Tanks[b]	B Each Batch	B Each Batch	Principal Gamma Emitters[c]	5×10^{-7}
			Mo-99, Ce-144	5×10^{-6}
			I-131	1×10^{-6}
	B One Batch/M	M	Dissolved & Entrained Gases (Gamma Emitters)	1×10^{-5}
	B Each Batch	M Composite[d]	H-3	1×10^{-5}
			Gross Alpha	1×10^{-7}
	B Each Batch	Q Composite[d]	Sr-89, Sr-90	5×10^{-8}
			Fe-55	1×10^{-6}
B. Continuous Releases[e,f]	3/W Composite[d]	W Composite[d]	Principal Gamma Emitters	5×10^{-7}
			Mo-99, Ce-144	5×10^{-6}
			I-131	1×10^{-6}
	M Grab Sample	M	Dissolved & Entrained Gases (Gamma Emitters)	1×10^{-5}
	W Composite[d]	M Composite[d]	H-3	1×10^{-5}
			Gross Alpha	1×10^{-7}
	W Composite[d]	Q Composite[d]	Sr-89, Sr-90	5×10^{-8}
			Fe-55	1×10^{-6}

TABLE 3.3.1-1 *(Continued)*

TABLE NOTATION

Frequency Notation

B = Batch
W = Weekly
M = Monthly
Q = Quarterly

[a]The LLD is defined, for purposes of these Controls, as the smallest concentration of radioactive material in a sample that will yield a net count, above system background, that will be detected with 95% probability with only 5% probability of falsely concluding that a blank observation represents a "real" signal. Equations used in the calculation of the LLD for a particular measurement system are presented in the ODCM.

It should be recognized that the LLD is defined as an a priori (before the fact) limit representing the capability of a measurement system and not as an a posteriori (after the fact) limit for a particular measurement.

[b]A batch release is the discharge of liquid wastes of a discrete volume. Prior to samplings for analyses, each batch shall be isolated, and then thoroughly mixed to assure representative sampling. (Steam Generators may be considered a batch release for reporting purpose during shutdown condition but should be analyzed in accordance with the continuous release section of table.)

[c]The principal gamma emitters for which the LLD Control applies exclusively are the following radionuclides: Mn-54, Fe-59, Co-58, Co-60, Zn-65, Cs-134, Cs-137; and Ce-141. This list does not mean that only these nuclides are to be monitored. Other gamma peaks that are identifiable, together with those of the above nuclides, shall also be analyzed and reported in the Annual Radioactive Effluent Release Report pursuant to Reporting Requirement 5.1.

[d]A composite sample is one in which the quantity of liquid sampled is proportional to the quantity of liquid waste discharged and in which the method of sampling employed results in a specimen that is representative of the liquids released.

[e]A continuous release is the discharge of liquid wastes of a nondiscrete volume, e.g., from a volume of a system that has an input flow during the continuous release.

[f]Steam generator feedwater shall be monitored for principal gamma emitters when steam generator blowdown exceeds 3×10^{-5} uci/ml and releases to the environment. This activity concentration is evaluated in accordance with the methodology presented in the ODCM.

2.3.2 DOSE FROM LIQUID EFFLUENTS

CONTROLS:

In accordance with Appendix A Technical Specifications 6.8.4.a.4 and 6.8.4.a.5, the dose or dose commitment to a MEMBER OF THE PUBLIC from radioactive materials in liquid effluents released, from each reactor unit, to UNRESTRICTED AREAS shall be limited:

1. During any calendar quarter to less than or equal to 1.5 mrems to the total body and to less than or equal to 5 mrems to any organ,

   and

2. During any calendar year to less than or equal to 3 mrems to the total body and to less than or equal to 10 mrems to any organ.

APPLICABILITY: At all times.

ACTION:

With the calculated dose from the release of radioactive materials in liquid effluents exceeding any of the above limits, in lieu of a Licensee Event Report, prepare and submit to the Commission within 30 days, pursuant to Appendix A Technical Specification 6.9.2, a Special Report that identifies the cause(s) for exceeding the limit(s) and defines the corrective action(s) that have been taken to reduce the release(s) and the proposed corrective actions to be taken to assure that subsequent releases will be in compliance with the above limits. This Special Report shall also include (1) the results of radiological analyses of the drinking water source and (2) the radiological impact on finished drinking water supplies with regard to the requirements of 40 CFR Part 141.*

3.3.2 SURVEILLANCE REQUIREMENTS:

Cumulative dose contributions from liquid effluents for the current calendar quarter and the current calendar year shall be determined in accordance with the methodology and parameters in the ODCM at least once per month.

---

* Applicable only if drinking water supply is taken from the receiving water body within 3 miles of the plant discharge. In the case of river sited plants this is 3 miles downstream only.

2.3.3 LIQUID RADWASTE TREATMENT SYSTEM

CONTROL:

In accordance with Appendix A Technical Specification 6.8.4.a.6, the liquid radwaste treatment system shall be used when the projected doses due to the liquid effluent, from each reactor unit, to UNRESTRICTED AREAS would exceed 0.06 mrem to the total body or 0.2 mrem to any organ in a 31 day period.

APPLICABILITY: At all times.

ACTION:

With radioactive liquid waste being discharged without treatment and in excess of the above limits, in lieu of a Licensee Event Report, prepare and submit to the Commission within 30 days, pursuant to Appendix A Technical Specification 6.9.2, a Special Report that includes the following information:

1. Explanation of why liquid radwaste was being discharged without treatment, identification of any inoperable equipment or subsystems, and the reason for the inoperability,

2. Action(s) taken to restore the inoperable equipment to OPERABLE status, and

3. Summary description of action(s) taken to prevent a recurrence.

3.3.3 SURVEILLANCE REQUIREMENTS:

Doses due to liquid releases from each reactor unit to UNRESTRICTED AREAS shall be projected at least once per month in accordance with the methodology and parameters in the ODCM when the liquid radwaste treatment systems are not being fully utilized.

2.4 RADIOACTIVE GASEOUS EFFLUENTS

2.4.1 GASEOUS EFFLUENT DOSE RATES

CONTROL:

In accordance with Appendix A Technical Specifications 6.8.4.a.3 and 6.8.4.a.7, the dose rate due to radioactive materials released in gaseous effluents from the site to areas at and beyond the SITE BOUNDARY shall be limited to the following:

1. For noble gases: Less than or equal to a dose rate of 500 mrems/yr to the total body and less than or equal to a dose rate of 3000 mrems/yr to the skin,

   and

2. For iodine-131, for tritium, and for all radionuclides in particulate form with half lives greater than 8 days: Less than or equal to a dose rate of 1500 mrems/yr to any organ.

APPLICABILITY: At all times.

ACTION:

With the dose rate(s) exceeding the above limits, immediately restore the release rate to within the above limit(s).

3.4.1 SURVEILLANCE REQUIREMENTS:

A. The dose rate due to noble gases in gaseous effluents shall be determined to be within the above limits in accordance with the methodology and parameters in the ODCM.

B. The dose rate due to iodine-131, tritium, and all radionuclides in particulate form with half lives greater than 8 days in gaseous effluents shall be determined to be within the above limits in accordance with the methodology and parameters in the ODCM by obtaining representative samples and performing analyses in accordance with the sampling and analysis program specified in Table 3.4.1-1.

TABLE 3.4.1-1

RADIOACTIVE GASEOUS WASTE SAMPLING AND ANALYSIS PROGRAM				
Gaseous Release Type	Sampling Frequency	Minimum Analysis Frequency	Type of Activity Analysis	Lower Limit of Detection (LLD[a]) (uCi/cc)
A. Waste Gas Storage	B Each Tank Grab Sample	B Each Tank	Principal Noble Gas Gamma Emitters[b]	$1x10^{-4}$
B. Containment Purge	B Each PURGE Grab Sample	B Each PURGE	Principal Noble Gas Gamma Emitters[b]	$1x10^{-4}$
C. Condenser Air Ejector	Grab Sample	M	Principal Noble Gas Gamma Emitters[b]	$1x10^{-4}$
D. Environmental Release Points (Plant Vent, Admin. Bldg. Controlled Area Vent, Radioactive Machine Shop Vent)	M[c] Grab Sample	M[c]	Principal Noble Gas Gamma Emitters[b]	$1x10^{-4}$
	M[d,e] Grab	M[d,e]	H-3	$1x10^{-6}$
	Continuous[f]	W[g] Charcoal Sample	I-131	$1x10^{-12}$
	Continuous[f]	W[g] Particulate Sample	Principal Gamma Emitters[b] (I-131, Others)	$1x10^{-11}$
	Continuous[f]	M Composite Particulate Sample	Gross Alpha	$1x10^{-11}$
	Continuous[f]	Q Composite Particulate Sample	Sr-89, Sr-90	$1x10^{-11}$
	Continuous[f]	Noble Gas Monitor	Noble Gases Gross Beta or Gamma	$1x10^{-6}$

TABLE 3.4.1-1 *(Continued)*

TABLE NOTATION

Frequency Notation

B = Batch
W = Weekly
M = Monthly
Q = Quarterly

[a]The LLD is defined, for purposes of these Controls, as the smallest concentration of radioactive material in a sample that will yield a net count, above system background, that will be detected with 95% probability with only 5% probability of falsely concluding that a blank observation represents a "real" signal. Equations used in the calculation of the LLD for a particular measurement system are presented in the ODCM.

It should be recognized that the LLD is defined as an a priori (before the fact) limit representing the capability of a measurement system and not as an a posteriori (after the fact) limit for a particular measurement.

[b]The principal gamma emitters for which the LLD Control applies exclusively are the following radionuclides: Kr-87, Kr-88, Xe-133, Xe-133m, Xe-135, and Xe-138 for gaseous emissions and Mn-54, Fe-59, Co-58, Co-60, Zn-65, Mo-99, Cs-134, Cs-137, Ce-141 and Ce-144 for particulate emissions. This list does not mean that only these nuclides are to be monitored. Other gamma peaks that are identifiable, together with those of the above nuclides, shall also be analyzed and reported in the Annual Radioactive Effluent Release Report pursuant to Reporting Requirement 5.1.

[c]The main plant vent shall be sampled and analyzed following shutdown, startup, or a THERMAL POWER change (within one hour) exceeding 15 percent of RATED THERMAL POWER unless either (1) analysis shows that the DOSE EQUIVALENT I-131 concentration in the primary coolant has not increased more than a factor of 3: or (2) the noble gas activity monitor shows that effluent activity has not increased by more than a factor of 3. Under no circumstances would iodine samples be required more than once per day. Plant vent Tritium grab samples shall be taken at least once per 24 hours when the refueling canal is flooded unless continuous sampling equipment is in use

[d]Plant vent tritium grab samples shall be taken at least once per 24 hours when the refueling canal is flooded unless continuous sampling equipment is in use.

[e]Plant vent tritium grab samples shall be taken at least once per 7 days from the ventilation exhaust from the spent fuel pool area, whenever spent fuel is in the spent fuel pool unless continuous sampling equipment is in use.

TABLE 3.4.1-1 *(Continued)*

TABLE NOTATION

[f]The ratio of the sample flow rate to the sampled steam flow rate shall be known for the time period covered by each dose or dose rate calculation made in accordance with Controls 2.4.1, 2.4.2 and 2.4.3.

[g]Samples shall be changed at least once per 7 days and analyses shall be completed within 48 hours after changing, or after removal from sampler. Sampling shall also be performed at least once per 24 hours for at least 7 days following each shutdown, startup or THERMAL POWER change exceeding 15 percent of RATED THERMAL POWER in one hour and analyses shall be completed within 48 hours of changing. When samples collected for 24 hours are analyzed, the corresponding LLDs may be increased by a factor of 10. This requirement does not apply if either (1) analysis shows that the DOSE EQUIVALENT I-131 concentration in the primary coolant has not increased more than a factor of 3; or (2) the noble gas monitor shows that effluent activity has not increased more than a factor of 3.

2.4.2 DOSE FROM NOBLE GASES

CONTROLS:

In accordance with Appendix A Technical Specifications 6.8.4.a.5 and 6.8.4.a.8, the air dose due to noble gases released in gaseous effluents, from each reactor unit, to areas at and beyond the SITE BOUNDARY shall be limited to the following:

1. During any calendar quarter: Less than or equal to 5 mrads for gamma radiation and less than or equal to 10 mrads for beta radiation.

   and,

2. During any calendar year: Less than or equal to 10 mrads for gamma radiation and less than or equal to 20 mrads for beta radiation.

APPLICABILITY: At all times.

ACTION:

With the calculated air dose from radioactive noble gases in gaseous effluents exceeding any of the above limits, in lieu of a Licensee Event Report, prepare and submit to the Commission within 30 days, pursuant to Appendix A Technical Specification 6.9.2, a Special Report that identifies the cause(s) for exceeding the limit(s) and defines the corrective actions that have been taken to reduce the releases and the proposed corrective actions to be taken to assure that subsequent releases will be in compliance with the above limits.

3.4.2 SURVEILLANCE REQUIREMENTS:

Cumulative dose contributions for the current calendar quarter and current calendar year for noble gases shall be determined in accordance with the ODCM at least once per month.

2.4.3 DOSE FROM IODINE-131, TRITIUM, AND RADIONUCLIDES IN PARTICULATE FORM

CONTROLS:

In accordance with Appendix A Technical Specifications 6.8.4.a.5 and 6.8.4.a.9, the dose to a MEMBER OF THE PUBLIC from iodine-131, tritium and all radionuclides in particulate form with half-lives greater than 8 days in gaseous effluents released, from each reactor unit, to areas at and beyond the SITE BOUNDARY shall be limited to the following:

1. During any calendar quarter: Less than or equal to 7.5 mrems to any organ

   and,

2. During any calendar year: Less than or equal to 15 mrems to any organ.

APPLICABILITY: At all times.

ACTION:

With the calculated dose from the release of iodine-131, tritium, and radionuclides in particulate form with half lives greater than 8 days, in gaseous effluents exceeding any of the above limits, in lieu of a Licensee Event Report, prepare and submit to the Commission within 30 days, pursuant to Appendix A Technical Specification 6.9.2, a Special Report that identifies the cause(s) for exceeding the limit and defines the corrective actions that have been taken to reduce the releases and the proposed corrective actions to be taken to assure that subsequent releases will be in compliance with the above limits.

3.4.3 SURVEILLANCE REQUIREMENTS:

Cumulative dose contributions for the current calendar quarter and current calendar year for iodine-131, tritium, and radionuclides in particulate form with half lives greater than 8 days shall be determined in accordance with the methodology and parameters in the ODCM at least once per month.

2.4.4 GASEOUS RADWASTE TREATMENT SYSTEM

CONTROL:

In accordance with Appendix A Technical Specification 6.8.4.a.6, the appropriate GASEOUS RADWASTE TREATMENT SYSTEM and the appropriate VENTILATION EXHAUST TREATMENT SYSTEM shall be used to reduce radioactive materials in gaseous waste prior to their discharge when the projected gaseous effluent air doses due to gaseous effluent releases, from each reactor unit, to areas at and beyond the SITE BOUNDARY would exceed 0.2 mrad for gamma radiation and 0.4 mrad for beta radiation in a 31 day period. The VENTILATION EXHAUST TREATMENT SYSTEM shall be used to reduce radioactive materials in gaseous waste prior to their discharge when the projected doses due to gaseous effluent releases, from each reactor unit, to areas at and beyond the SITE BOUNDARY would exceed 0.3 mrem to any organ of a MEMBER OF THE PUBLIC in a 31 day period.

APPLICABILITY: At all times.

ACTION:

With gaseous waste being discharged without treatment and in excess of the above limits, in lieu of a Licensee Event Report, prepare and submit to the Commission within 30 days, pursuant to Appendix A Technical Specification 6.9.2, a Special Report that includes the following information:

1. Explanation of why gaseous radwaste was being discharged without treatment, identification of any inoperable equipment or subsystems, and the reason for the inoperability,

2. Action(s) taken to restore the inoperable equipment to OPERABLE status,

   and

3. Summary description of action(s) taken to prevent a recurrence.

3.4.4 SURVEILLANCE REQUIREMENTS:

Doses due to gaseous releases from each reactor unit to areas at and beyond the SITE BOUNDARY shall be projected at least once per month in accordance with the methodology and parameters in the ODCM when the GASEOUS RADWASTE TREATMENT SYSTEMS are not being fully utilized.

2.5/3.5 SOLID RADIOACTIVE WASTE CONTROLS AND SURVEILLANCE REQUIREMENTS:

These sections are contained in the PCP.

2.6 TOTAL DOSE

CONTROL:

In accordance with Appendix A Technical Specification 6.8.4.a.10, limit the annual (calendar year) dose or dose commitment to any MEMBER OF THE PUBLIC due to releases of radioactivity and to direct radiation from uranium fuel cycle sources to less than or equal to 25 mrems to the total body or any organ, except the thyroid, which shall be limited to less than or equal to 75 mrems.

APPLICABILITY: At all times.

ACTION:

A. With calculated doses from the release of radioactive materials in liquid or gaseous effluents exceeding twice the limits of Control 2.3.2.A, 2.4.2.A or 2.4.3.A, calculations should be made, including direct radiation contributions from the reactor units and from outside storage tanks, to determine whether the above limits have been exceeded.

B. If such is the case, in lieu of a Licensee Event Report, prepare and submit to the Commission within 30 days, pursuant to Appendix A Technical Specification 6.9.2, a Special Report that defines the corrective action to be taken to reduce subsequent releases to prevent recurrence of exceeding the above limits and includes the schedule for achieving conformance with the above limits. This Special Report, as defined in 10 CFR Part 20.2203(a)(4), shall include an analysis that estimates the radiation exposure (dose) to a MEMBER OF THE PUBLIC from uranium fuel cycle sources, including all effluent pathways and direct radiation, for the calendar year that includes the release(s) covered by this report. It shall also describe levels of radiation and concentrations of radioactive material involved, and the cause of the exposure levels or concentrations. If the estimated dose(s) exceeds the above limits and if the release condition resulting in violation of 40 CFR Part 190 has not already been corrected, the Special Report shall include a request for a variance in accordance with the provisions of 40 CFR Part 190. Submittal of the report within 30 days is considered a timely request, and a variance is granted until staff action on the request is complete.

3.6 SURVEILLANCE REQUIREMENTS:

A. Cumulative dose contributions from liquid and gaseous effluents shall be determined in accordance with Surveillance Requirements 3.3.2, 3.4.2, 3.4.3 and in accordance with the methodology and parameters in the ODCM.

B. Cumulative dose contributions from direct radiation from the reactor units and from radwaste storage tanks shall be determined in accordance with the methodology and parameters in the ODCM. This requirement is applicable only under conditions set forth in Control 2.6.

2.7 RADIOLOGICAL ENVIRONMENTAL MONITORING PROGRAM

CONTROL:

In accordance with Appendix A Technical Specification 6.8.4.b.1, the Radiological Environmental Monitoring Program shall be conducted as specified in Table 2.7-1.

APPLICABILITY: At all times.

ACTION:

A. With the Radiological Environmental Monitoring Program not being conducted as specified in Table 2.7-1, in lieu of a Licensee Event Report, prepare and submit to the Commission, in the Annual Radiological Environmental Operating Report required by Reporting Requirement 5.2, a description of the reasons for not conducting the program as required and the plans for preventing a recurrence.

B. With the level of radioactivity as the result of plant effluents in an environmental sampling medium at a specified location exceeding the reporting levels of Table 2.7-2 when averaged over any calendar quarter, in lieu of a Licensee Event Report, prepare and submit to the Commission within 30 days, pursuant to Appendix A Technical Specification 6.9.2, a Special Report that identifies the cause(s) for exceeding the limit(s) and defines the corrective actions to be taken to reduce radioactive effluents so that the potential annual dose to A MEMBER OF THE PUBLIC is less than the calendar year limits of Controls 2.3.2, 2.4.2, and 2.4.3. When more than one of the radionuclides in Table 2.7-2 are detected in the sampling medium, this report shall be submitted if:

$$\frac{\text{concentration (1)}}{\text{reporting level (1)}} + \frac{\text{concentration (2)}}{\text{reporting level (2)}} + \ldots \geq 1.0$$

When radionuclides other than those in Table 2.7-2 are detected and are the result of plant effluents, this report shall be submitted if the potential annual dose to A MEMBER OF THE PUBLIC is equal to or greater than the calendar year limits of Controls 2.3.2, 2.4.2, and 2.4.3. This report is not required if the measured level of radioactivity was not the result of plant effluents; however, in such an event, the condition shall be reported and described in the Annual Radiological Environmental Operating Report.

C. With milk or fresh leafy vegetable samples unavailable from one or more of the sample locations required by Table 2.7-1, identify locations for obtaining replacement samples and add them to the Radiological Environmental Monitoring Program within 30 days. The specific locations from which samples were unavailable may then be deleted from the monitoring program. In lieu of a Licensee Event Report and pursuant to Reporting Requirement 5.1, identify the cause of the unavailability of samples and identify the new location(s) for obtaining replacement samples in the next Annual Radioactive Effluent Release Report and also include in the report a revised figure(s) and table for the ODCM reflecting the new location(s).

3.7 SURVEILLANCE REQUIREMENTS:

The radiological environmental monitoring samples shall be collected pursuant to Table 2.7-1 from the specific locations given in the table and figure(s) in the ODCM and the detection capabilities required by Table 3.7-1.

TABLE 2.7-1

RADIOLOGICAL ENVIRONMENTAL MONITORING PROGRAM			
Exposure Pathway and/or Sample	**Number of Representative Samples and Sample Locations[a]**	**Sampling and Collection Frequency**	**Type and Frequency of Analysis**
1. Direct Radiation[b]	40 routine monitoring stations (DR1-DR40) with two or more dosimeters for measuring and recording integrated dose continuously placed as follows: an inner ring of stations, one in each meteorological sector in the general area of the site boundary (DR1-DR16) an outer ring of stations, one in each meteorological sector in the 6 to 8 km range from the site (DR17-DR32) the balance of the stations (DR33-DR40) to be placed in special interest areas and in one area to serve as a control station.	Quarterly	Gamma dose quarterly

TABLE 2.7-1 *(Continued)*

RADIOLOGICAL ENVIRONMENTAL MONITORING PROGRAM			
Exposure Pathway and/or Sample	**Number of Representative Samples and Sample Locations[a]**	**Sampling and Collection Frequency**	**Type and Frequency of Analysis**
2. Airborne Radioiodine and Particulates	Samples from 5 locations (A1-A5): 3 samples (A1-A3) from close to the 3 site boundary locations in different sectors, of the highest calculated annual average ground level D/Q. 1 sample (A4) from the vicinity of a community having the highest calculated annual average ground level D/Q. 1 sample (A5) from a control location as for example 15-30 km distant and in the least prevalent wind direction.	Continuous sampler operation with collection weekly, or more frequently if required by dust loading	Radioiodine Canister: I-131 analysis weekly. Particulate Sampler: Gross beta radioactivity analysis following filter change;[d] Gamma isotopic analysis[e] of composite (by location) quarterly
3. Waterborne			
a. Surface	1 sample upstream[f] (Wa1) 1 sample downstream (Wa2)	Composite sample over 1 month period[g]	Gamma isotopic analysis[e] monthly. Composite for tritium analysis quarterly.

TABLE 2.7-1 *(Continued)*

RADIOLOGICAL ENVIRONMENTAL MONITORING PROGRAM			
Exposure Pathway and/or Sample	**Number of Representative Samples and Sample Locations[a]**	**Sampling and Collection Frequency**	**Type and Frequency of Analysis**
3. Waterborne			
b. Drinking	1 sample (Wb1) of the nearest surface drinking supply	Grab monthly	Gross beta and gamma isotopic analysis monthly. Composite for tritium analysis quarterly.
c. Sediment from Shoreline	2 samples (Wc1-Wc2) 1 sample (Wc1) from downstream area with existing or potential recreational value. 1 control sample (Wc2) from an upstream area.	2 annually at least 90 days apart	Gamma isotopic analysis[e]
4. Ingestion			
a. Milk	Samples from milking animals in 3 locations (Ia1-Ia3) within 5 km distance having the highest dose potential. If there are none, then 1 sample from milking animals in each of 3 areas (Ia1-Ia3) between 5 to 8 km distant if available where doses are calculated to be greater than 1 mrem per yr[h]. 1 sample from milking animals at a control location (Ia4), 15-30 km distant and in the least prevalent wind direction.	Semimonthly when animals are on pasture; monthly at other times. Con-currently with indicator locations.	Gamma isotopic[e] and I-131 analysis semimonthly when animals are on pasture; monthly at other times.

TABLE 2.7-1 *(Continued)*

RADIOLOGICAL ENVIRONMENTAL MONITORING PROGRAM			
Exposure Pathway and/or Sample	**Number of Representative Samples and Sample Locations[a]**	**Sampling and Collection Frequency**	**Type and Frequency of Analysis**
4. Ingestion			
b. Fish and Invertebrates	2 samples (Ib1, Ib2) 1 sample (Ib1) of each of 2 species commercially and/or recreationally important species of fish or invertebrate in the vicinity of the discharge when available. 1 sample (Ib2) of each of 2 commercially and/or recreationally important species (the same species as in Ib1 if available) from an area not influenced by plant discharge.	Sample in season, or semi-annually if they are not seasonal	Gamma isotopic analysis[e]
c. Food Products	Samples of 3 different kinds of broad leaf vegetation (edible or inedible) grown nearest each of two different offsite locations of highest predicted annual average ground level D/Q if milk sampling is not performed (Ic1-Ic2).	Monthly when available	Gamma isotopic[e] and I-131 analysis
	1 sample of each of the similar broad leaf vegetation grown 15-30 km distant in the least prevalent wind direction if milk sampling is not performed (Ic3).	Monthly when available	Gamma isotopic[e] and I-131 analysis

TABLE 2.7-1 *(Continued)*

TABLE NOTATION

[a]The code letters in parenthesis (e.g., DR1, A1, etc.) refer to sample locations as specified in the ODCM. Specific parameters of distance and direction sector from the centerline of one reactor, and additional description where pertinent, shall be provided for each and every sample location in Table 2.7-1 in a table and figure(s) in the ODCM. Refer to NUREG-0133, "Preparation of Radiological Effluent Technical Specifications for Nuclear Power Plant," October 1978, and to Radiological Assessment Branch Technical Position, Revision 1, November 1979. Deviations are permitted from the required sampling schedule if specimens are unobtainable due to hazardous conditions, seasonal unavailability, malfunction of automatic sampling equipment and other legitimate reasons. If specimens are unobtainable due to sampling equipment malfunction, every effort shall be made to complete corrective action prior to the end of the next sampling period. All deviations from the sampling schedule shall be documented in the Annual Radiological Environmental Operating Report pursuant to Reporting Requirement 5.2. It is recognized that, at times, it may not be possible or practicable to continue to obtain samples of the media of choice at the most desired location or time. In these instances suitable alternative media and locations may be chosen for the particular pathway in question and appropriate substitutions made within 30 days in the Radiological Environmental Monitoring Program. In lieu of a Licensee Event Report and pursuant to Reporting Requirement 5.1, identify the cause of the unavailability of samples for that pathway and identify the new location(s) for obtaining replacement samples in the next Annual Radioactive Effluent Release Report and also include in the report a revised figure(s) and table for the ODCM reflecting the new location(s).

[b]One or more instruments, such as a pressurized ion chamber, for measuring and recording dose rate continuously may be used in place of, or in addition to, integrating dosimeters. For the purposes of this table, a thermoluminescent dosimeter (TLD) is considered to be one phosphor; two or more phosphors in a packet are considered as two or more dosimeters. Film badges shall not be used as dosimeters for measuring direct radiation.

[c]The purpose of this sample is to obtain background information. If it is not practical to establish control locations in accordance with the distance and wind direction criteria, other sites that provide valid background data may be substituted.

[d]Airborne particulate sample filters shall be analyzed for gross beta radioactivity 24 hours or more after sampling to allow for radon and thoron daughter decay. If gross beta activity in air particulate samples is greater than ten times the yearly mean, of the previous calendar year, of control samples, gamma isotopic analysis shall be performed on the individual samples.

TABLE 2.7-1 *(Continued)*

TABLE NOTATION

[e]Gamma isotopic analysis means the identification and quantification of gamma emitting radionuclides that may be attributable to the effluents from the facility.

[f]"Upstream" sample shall be taken near the intake structures as described in the ODCM. The "downstream sample" shall be taken from the mixing zone at the diffuser to the discharge canal.

[g]A composite sample is one in which the quantity (aliquot) of liquid sampled shall be collected at time intervals that are very short (e.g., hourly) relative to the compositing period (e.g., monthly) in order to assure obtaining a representative sample.

[h]The dose shall be calculated for the maximum organ and age group using the methodology and parameters in the ODCM.

TABLE 2.7-2

REPORTING LEVELS FOR RADIOACTIVITY CONCENTRATIONS IN ENVIRONMENTAL SAMPLES					
Reporting Levels					
Analysis	Water (pCi/ℓ)	Airborne Particulate or Gases (pCi/m^3)	Fish (pCi/kg, wet)	Milk (pCi/ℓ)	Food Products (pCi/kg, wet)
H-3	20,000*				
Mn-54	1,000		30,000		
Fe-59	400		10,000		
Co-58	1,000		30,000		
Co-60	300		10,000		
Zn-65	300		20,000		
Zr-Nb-95	400				
I-131	2**	0.9		3	100
Cs-134	30	10	1,000	60	1,000
Cs-137	50	20	2,000	70	2,000
Ba-La-140	200			300	

* For drinking water samples. This is 40 CFR Part 141 value. If no drinking water pathway exists, a value of 30,000 pCi/ℓ may be used.

* If no drinking water pathway exists, a value of 20 pCi/ℓ may be used.

TABLE 3.7-1

DETECTION CAPABILITIES FOR ENVIRONMENTAL SAMPLE ANALYSIS[a]						
LOWER LIMIT OF DETECTION (LLD)[b,c]						
Analysis	Water (pCi/ℓ)	Airborne Particulate or Gases (pCi/m³)	Fish (pCi/kg, wet)	Milk (pCi/ℓ)	Food Products (pCi/kg, wet)	Sediment (pCi/kg, dry)
gross beta	4	0.01				
H-3	2,000*					
Mn-54	15		130			
Fe-59	30		260			
Co-58, 60	15		130			
Zn-65	30		260			
Zr-Nb-95	15					
I-131	1**	0.07		1	60	
Cs-134	15	0.05	130	15	60	150
Cs-137	18	0.06	150	18	80	180
Ba-La-140	15			15		

TABLE NOTATION

* If no drinking water pathway exists, a value of 3,000 pCi/ℓ may be used.

** If no drinking water pathway exists, a value of 15 pCi/ℓ may be used.

TABLE 3.7-1 (Continued)

[a]This list does not mean that only these nuclides are to be considered. Other peaks that are identifiable, together with those of the above nuclides, shall also be analyzed and reported in the Annual Radiological Environmental Operating Report pursuant to Reporting Requirement 5.2.

[b]Required detection capabilities for thermoluminescent dosimeters used for environmental measurements are given in Regulatory Guide 4.13.

[c]The LLD is defined, for purposes of these Controls as the smallest concentration of radioactive material in a sample that will yield a net count, above system background, that will be detected with 95% probability with only 5% probability of falsely concluding that a blank observation represents a "real" signal. Equations used in the calculation of the LLD for a particular measurement system are presented in the ODCM.

It should be recognized that the LLD is defined as an a priori (before the fact) limit representing the capability of a measurement system and not as an a posteriori (after the fact) limit for a particular measurement. Analyses shall be performed in such a manner that the stated LLDs will be achieved under routine conditions. Occasionally background fluctuations, unavoidable small sample sizes, the presence of interfering nuclides, or other uncontrollable circumstances may render these LLDs unachievable. In such cases, the contributing factors shall be identified and described in the Annual Radiological Environmental Operating Report pursuant to Reporting Requirement 5.2.

2.8 LAND USE CENSUS

CONTROL:

In accordance with Appendix A Technical Specification 6.8.4.b.2, conduct a land use census which identifies within a distance of 8 km (5 miles) the location in each of the 16 meteorological sectors of the nearest milk animal, the nearest residence and the nearest garden of greater than $50m^2$ ($500\ ft^2$) producing broad leaf vegetation. Broad leaf vegetation sampling of at least three different kinds of vegetation may be performed at the SITE BOUNDARY in each of two different direction sectors with the highest predicted D/Qs in lieu of the garden census. The Controls for broad leaf vegetation sampling in Table 2.7-1.4c shall be followed, including analysis of control samples.

APPLICABILITY: At all times.

ACTION:

A. With a land use census identifying a location(s) that yields a calculated dose or dose commitment greater than the values currently being calculated in Control 3.4.3, in lieu of a Licensee Event Report, identify the new location(s) in the next Annual Radioactive Effluent Release Report, pursuant to Reporting Requirement 5.1.

B. With a land use census identifying a location(s) that yields a calculated dose or dose commitment (via the same exposure pathway) two times greater than at a location from which samples are currently being obtained in accordance with Control 2.7, add the new location(s) to the Radiological Environmental Monitoring Program within 30 days. The sampling location(s), excluding the control station location, having the lowest calculated dose or dose commitment(s), via the same exposure pathway, may be deleted from this monitoring program after (October 31) of the year in which this land use census was conducted. In lieu of a Licensee Event Report and pursuant to Reporting Requirement 5.1, identify the new location(s) in the next Annual Radioactive Effluent Release Report and also include in the report a revised figure(s) and table for the ODCM reflecting the new location(s).

3.8 SURVEILLANCE REQUIREMENTS:

The land use census shall be conducted during the growing season at least once per calendar year using that information that will provide the best results, such as by a door-to-door survey, aerial survey or by consulting local agriculture authorities. The results of the land use census shall be included in the Annual Radiological Environmental Operating Report pursuant to Reporting Requirement 5.2.

2.9 INTERLABORATORY COMPARISON PROGRAM

CONTROL:

In accordance with Appendix A Technical Specification 6.8.4.b.3, perform analyses on radioactive materials supplied as part of an Interlaboratory Comparison Program that has been approved by the Commission.

APPLICABILITY: At all times.

ACTION:

With analyses not being performed as required above, report the corrective actions taken to prevent a recurrence to the Commission in the Annual Radiological Environmental Operating Report pursuant to Reporting Requirement 5.2.

3.9 SURVEILLANCE REQUIREMENTS:

A summary of the results obtained as part of the required Interlaboratory Comparison Program shall be included in the Annual Radiological Environmental Operation Report pursuant to Reporting Requirement 5.2.

4.0 BASES

RADIOACTIVE LIQUID EFFLUENT MONITORING INSTRUMENTATION (2/3.1)

The radioactive liquid effluent instrumentation is provided to monitor and control, as applicable, the releases of radioactive materials in liquid effluents during actual or potential releases of liquid effluents. The alarm/trip setpoints for these instruments shall be calculated and adjusted in accordance with the methodology and parameters in the ODCM to ensure that the alarm/trip will occur prior to exceeding 10 times the EFFLUENT CONCENTRATION values specified in Appendix B, Table 2, Column 2 to 10 CFR 20. The OPERABILITY and use of this instrumentation is consistent with the requirements of General Design Criteria 60, 63 and 64 of Appendix A to 10 CFR Part 50. The purpose of tank level indicating devices is to assure the detection and control of leaks that if not controlled could potentially result in the transport of radioactive materials to UNRESTRICTED AREAS.

RADIOACTIVE GASEOUS EFFLUENT MONITORING INSTRUMENTATION (2/3.2)

The radioactive gaseous effluent instrumentation is provided to monitor and control, as applicable, the releases of radioactive materials in gaseous effluents during actual or potential releases of gaseous effluents. The alarm/trip setpoints for these instruments shall be calculated and adjusted in accordance with the methodology and parameters in the ODCM to ensure that the alarm/trip will occur prior to exceeding the limits of 10 CFR Part 20. The OPERABILITY and use of this instrumentation is consistent with the requirements of General Design Criteria 60, 63 and 64 of Appendix A to 10 CFR Part 50.

LIQUID EFFLUENTS CONCENTRATION (2/3.3.1)

This Control is provided to ensure that the concentration of radioactive materials released in liquid waste effluents to UNRESTRICTED AREAS will be less than 10 times the EFFLUENT CONCENTRATION values specified in Appendix B, Table 2, Column 2 to 10 CFR 20. The Control provides operational flexibility for releasing liquid effluents in concentrations to follow the Section II.A and II C design objectives of Appendix I to 10 CFR Part 50. This limitation provides reasonable assurance that the levels of radioactive materials in bodies of water in UNRESTRICTED AREAS will result in exposures within (1) the Section II.A design objectives of Appendix I, 10 CFR Part 50, to a MEMBER OF THE PUBLIC and (2) the restrictions authorized by 10 CFR Part 20.1301(e). The concentration limit for the dissolved or entrained noble gases is based upon the assumption that Xe-135 is the controlling radionuclide and its EFFLUENT CONCENTRATION in air (submersion) was converted to an equivalent concentration in water. This control does not affect the requirement to comply with the annual limitations of 10 CFR Part 20.1301(a).

This Control applies to the release of radioactive materials in liquid effluents from all units at the site.

The required detection capabilities for radioactive materials in liquid waste samples are tabulated in terms of the lower limits of detection (LLDs). Detailed discussion of the LLD and other detection limits can be found in Currie, L.A., "Lower Limit of Detection: Definition and Elaboration of a Proposed Position for Radiological Effluent and Environmental Measurements," NUREG/CR-4007 (September 1984), and in the HASL Procedures Manual, HASL-300 (revised annually).

DOSE FROM LIQUID EFFLUENTS (2/3.3.2)

This Control is provided to implement the requirements of Sections II.A, III.A and IV.A of Appendix I, 10 CFR Part 50. The Control statement implements the guides set forth in Section II.A of Appendix I. The Action statements provide the required operating flexibility and at the same time implement the guides set forth in Section IV.A of Appendix I to assure that the releases of radioactive material in liquid effluents will be kept "as low as is reasonably achievable." Also, for fresh water sites with drinking water supplies that can be potentially affected by plant operations, there is reasonable assurance that the operation of the facility will not result in radionuclide concentrations in the finished drinking water that are in excess of the requirements of 40 CFR Part 141. The dose calculation methodology and parameters in the ODCM implement the requirements in Section III.A of Appendix I that conformance with the guides of Appendix I be shown by calculational procedures based on models and data, such that the actual exposure of a MEMBER OF THE PUBLIC through appropriate pathways is unlikely to be substantially underestimated. The equations specified in the ODCM for calculating the doses due to the actual release rates of radioactive materials in liquid effluents are consistent with the methodology provided in Regulatory Guide 1.109, "Calculation of Annual Doses to Man from Routine Releases of Reactor Effluents for the purpose of Evaluating Compliance with 10 CFR Part 50, Appendix I," Revision 1, October 1977 and Regulatory Guide 1.113, "Estimating Aquatic Dispersion of Effluents from Accidental and Routine Reactor Releases for the Purpose of Implementing Appendix I," April 1977.

This Control applies to the release of liquid effluents from each reactor at the site. For units with shared radwaste treatment systems, the liquid effluents from the shared system are proportioned among the units sharing that system.

LIQUID RADWASTE TREATMENT SYSTEM (2/3.3.3)

The requirement that the appropriate portions of this system be used, when specified, provides assurance that the releases of radioactive materials in liquid effluents will be kept "as low as is reasonably achievable". This Control implements the requirements of 10 CFR Part 50.36a, General Design Criterion 60 of Appendix A to 10 CFR Part 50 and the design objective given in Section II.D of Appendix I to 10 CFR part 50. The specified limits governing the use of appropriate portions of the liquid radwaste treatment system were specified as a suitable fraction of the dose design objectives set forth in Section II.A of Appendix I, 10 CFR Part 50, for liquid effluents.

This Control applies to the release of liquid effluents from each reactor at the site. For units with shared radwaste treatment systems, the liquid effluents from the shared system are proportioned among the units sharing that system.

GASEOUS EFFLUENTS DOSE RATE (2/3.4.1)

This Control provides reasonable assurance that radioactive material discharged in gaseous effluents will not result in the exposure of a MEMBER OF THE PUBLIC in an UNRESTRICTED AREA, either at or beyond the Site Boundary in excess of the design objectives of Appendix I to 10 CFR Part 50. This Control is provided to ensure that gaseous effluents from all units on the site will be appropriately controlled. It provides operational flexibility for releasing gaseous effluents to satisfy the Section II.A and II.C design objectives of Appendix I to 10 CFR Part 50. For MEMBERS OF THE PUBLIC who may at times be within the Site Boundary, the occupancy of that MEMBER OF THE PUBLIC will usually be sufficiently low to compensate for the reduced atmospheric dispersion of gaseous effluents relative to that for the Site Boundary. Examples of calculations for such MEMBERS OF THE PUBLIC, with the appropriate occupancy factors, shall be given in the ODCM. The specified release rate limits restrict, at all times, the corresponding dose rates above background to a MEMBER OF THE PUBLIC at or beyond the Site Boundary to less than or equal to 500 mrem/year to the total body or to less than or equal to 3000 mrem/year to the skin. These release rate limits also restrict, at all times, the corresponding thyroid dose rate above background to a child via the inhalation pathway to less than or equal to 1500 mrem/year. This Control does not affect the requirement to comply with the annual limitations of 10 CFR 20.1301(a).

This Control applies to the release of gaseous effluents from all units at the site.

DOSE FROM NOBLE GASES (2/3.4.2)

This Control is provided to implement the requirements of Sections II.B, III.A and IV.A of Appendix I, 10 CFR Part 50. The Control statements implement the guides set forth in Section II.B of Appendix I. The Action statements provide the required operating flexibility and at the same time implement the guides set forth in Section IV.A of Appendix I to assure that the releases of radioactive material in gaseous effluents will be kept "as low as is reasonably achievable." The Surveillance Requirements implement the requirements in Section III.A of Appendix I that conformance with the guides of Appendix I be shown by calculational procedures based on models and data such that the actual exposure of a MEMBER OF THE PUBLIC through appropriate pathways is unlikely to be substantially underestimated.

The dose calculation methodology and parameters established in the ODCM for calculating the doses due to the actual release rates of radioactive noble gases in gaseous effluents are consistent with the methodology provided in Regulatory Guide 1.109, "Calculation of Annual Doses to Man from Routine Releases of Reactor Effluents for the Purpose of Evaluating Compliance with 10 CFR Part 50, Appendix I," Revision 1, October 1977 and Regulatory Guide 1.111, "Methods for Estimating Atmospheric Transport and Dispersion of Gaseous Effluents in Routine Releases from Light-Water Cooled Reactors," Revision 1, July 1977. The ODCM equations provided for determining the air doses at and beyond the SITE BOUNDARY are based upon the historical average atmospheric conditions.

This Control applies to the release of gaseous effluents from each reactor at the site. For units with shared radwaste treatment systems, the gaseous effluents from the shared system are proportioned among the units sharing that system.

DOSE FROM IODINE-131, TRITIUM, AND RADIONUCLIDES IN PARTICULATE FORM (2/3.4.3)

This Control is provided to implement the requirements of Sections II.C, III.A and IV.A of Appendix I, 10 CFR Part 50. The Controls are the guides set forth in Section II.C of Appendix I. The Action statements provide the required operating flexibility and at the same time implement the guides set forth in Section IV.A of Appendix I to assure that the releases of radioactive materials in gaseous effluents will be kept "as low as is reasonably achievable." The ODCM calculational methods specified in the Surveillance Requirements implement the requirements in Section III.A of Appendix I that conformance with the guides of Appendix I be shown by calculational procedures based on models and data, such that the actual exposure of a MEMBER OF THE PUBLIC through appropriate pathways is unlikely to be substantially underestimated.

The ODCM calculational methodology and parameters for calculating the doses due to the actual release rates of the subject materials are consistent with the methodology provided in Regulatory Guide 1.109, "Calculation of Annual Doses to Man from Routine Releases of Reactor Effluents for the Purpose of Evaluating Compliance with 10 CFR Part 50, Appendix I," Revision 1, October 1977 and Regulatory Guide 1.111, "Methods for Estimating Atmospheric Transport and Dispersion of Gaseous Effluents in Routine Releases from Light-Water-Cooled Reactors," Revision 1, July 1977. These equations also provide for determining the actual doses based upon the historical average atmospheric conditions. The release rate Controls for iodine-131, tritium, and radionuclides in particulate form with half lives greater than 8 days are dependent upon the existing radionuclide pathways to man, in the areas at and beyond the SITE BOUNDARY. The pathways that were examined in the development of these calculations were: 1) individual inhalation of airborne radionuclides, 2) deposition of radionuclides onto green leafy vegetation with subsequent consumption by man, 3) deposition onto grassy areas where milk animals and meat producing animals graze with consumption of the milk and meat by man, and 4) deposition on the ground with subsequent exposure of man.

This Control applies to the release of gaseous effluents from each reactor at the site. For units with shared radwaste treatment systems, the gaseous effluents from the shared systems are proportioned among the units sharing that system.

GASEOUS RADWASTE TREATMENT SYSTEM (2/3.4.4)

The requirement that the appropriate portions of these systems be used, when specified, provides reasonable assurance that the release of radioactive materials in gaseous effluents will be kept "as low as is reasonably achievable." This Control implements the requirements of 10 CFR Part 50.36a, General Design Criterion 60 of Appendix A to 10 CFR Part 50, and the design objectives given in Section II.D of Appendix I to 10 CFR Part 50.

The specified limits governing the use of appropriate portions of the systems were specified as a suitable fraction of the dose design objectives set forth in Sections II.B and II.C of Appendix I, 10 CFR Part 50, for gaseous effluents.

This Control applies to the release of gaseous effluents from each reactor at the site. For units with shared radwaste treatment systems, the gaseous effluents from the shared systems are proportioned among the units sharing that system.

TOTAL DOSE (2/3.6)

This Control is provided to meet the dose limitations of 40 CFR Part 190 that have been incorporated into 10 CFR Part 20.1301(d). The Control requires the preparation and submittal of a Special Report whenever the calculated doses due to releases of radioactivity and to radiation from uranium fuel cycle sources exceed 25 mrems to the total body or any organ, except the thyroid, which shall be limited to less than or equal to 75 mrems.

For sites containing up to 4 reactors, it is highly unlikely that the resultant dose to a MEMBER OF THE PUBLIC will exceed the dose limits of 40 CFR Part 190 if the individual reactors remain within twice the dose design objectives of Appendix I, and if direct radiation doses from the reactor units and outside storage tanks are kept small. The Special Report will describe a course of action that should result in the limitation of the annual dose to a MEMBER OF THE PUBLIC to within the 40 CFR Part 190 limits. For the purposes of the Special Report, it may be assumed that the dose commitment to the MEMBER OF THE PUBLIC from other uranium fuel cycle sources is negligible, with the exception that dose contributions from other nuclear fuel cycle facilities at the same site or within a radius of 8 km must be considered. If the dose to any MEMBER OF THE PUBLIC is estimated to exceed the requirements of 40 CFR Part 190, submittal of the Special Report within 30 days with a request for a variance (provided the release conditions resulting in violation of 40 CFR Part 190 have not already been corrected), in accordance with the provisions of 40 CFR Part 190.11 and 10 CFR Part 20.2203(a)(4), is considered to be a timely request and fulfills the requirements of 40 CFR Part 190 until NRC staff action is completed. The variance only relates to the limits of 40 CFR Part 190, and does not apply in any way to the other requirements for dose limitation of 10 CFR Parts 20, as addressed in Controls 2.3.1 and 2.4.1. An individual is not considered a MEMBER OF THE PUBLIC during any period in which he/she is engaged in carrying out any operation that is part of the nuclear fuel cycle.

Demonstration of compliance with the limits of 40 CFR Part 190 or with the design objectives of Appendix I to 10 CFR Part 50 will be considered to demonstrate compliance with the 0.1 rem limit of 10 CFR Part 20.1301.

RADIOLOGICAL ENVIRONMENTAL MONITORING PROGRAM (2/3.7)

The Radiological Environmental Monitoring Program required by this Control provides representative measurements of radiation and of radioactive materials in those exposure pathways and for those radionuclides that lead to the highest potential radiation exposures of MEMBERS OF THE PUBLIC resulting from the station operation.

This monitoring program implements Section IV.B.2 of Appendix I to 10 CFR Part 50 and thereby supplements the Radiological Effluent Monitoring Program by verifying that the measurable concentrations of radioactive materials and levels of radiation are not higher than expected on the basis of the effluent measurements and the modeling of the environmental exposure pathways. Program changes may be initiated based on operational experience.

The required detection capabilities for environmental sample analyses are tabulated in terms of the lower limits of detection (LLDs). The LLDs required by Table 3.7-1 are considered optimum for routine environmental measurements in industrial laboratories. It should be recognized that the LLD is defined as an a priori (before the fact) limit representing the capability of a measurement system and not as an a posteriori (after the fact) limit for a particular measurement.

LAND USE CENSUS (2/3.8)

This Control is provided to ensure that changes in the use of areas at and beyond the SITE BOUNDARY are identified and that modifications to the Radiological Environmental Monitoring Program are made if required by the results of this census. The best information from the door-to-door survey, from aerial survey or from consulting with local agricultural authorities shall be used. This census satisfies the requirements of Section IV.B.3 of Appendix I to 10 CFR Part 50. Restricting the census to gardens of greater than 50 m^2 provides assurance that significant exposure pathways via leafy vegetables will be identified and monitored since a garden of this size is the minimum required to produce the quantity (26 kg/year) of leafy vegetables assumed in Regulatory Guide 1.109 for consumption by a child. To determine this minimum garden size, the following assumptions were made: 1) 20% of the garden was used for growing broad leaf vegetation (i.e., similar to lettuce and cabbage), and 2) a vegetation yield of 2 kg/m^2.

INTERLABORATORY COMPARISON PROGRAM (2/3.9)

The requirement for participation in an approved Interlaboratory Comparison Program is provided to ensure that independent checks on the precision and accuracy of the measurements of radioactive material in environmental sample matrices are performed as part of the quality assurance program for environmental monitoring in order to demonstrate that the results are reasonably valid for the purposes of Section IV.B.2 of Appendix I to 10 CFR Part 50.

5.0 REPORTING REQUIREMENTS

5.1 ANNUAL RADIOACTIVE EFFLUENT RELEASE REPORT

A Radioactive Effluent Release Report covering the operation of the unit during the previous year shall be submitted prior to May 1 of each year. A single submittal may be made for a multiple unit station. The submittal should combine those sections that are common to all units at the station; however, for units with separate radwaste systems, the submittal shall specify the releases of radioactive material from each unit.

The Annual Radioactive Effluent Release Report shall include the following information:

- A summary of the quantities of radioactive liquid and gaseous effluents and solid waste released from the unit as outlined in Regulatory Guide 1.21, "Measuring, Evaluating, and Reporting Radioactivity in Solid Wastes and Releases of Radioactive Materials in Liquid and Gaseous Effluents from Light-Water-Cooled Nuclear Power Plants," Revision 1, June 1974, with data summarized on a quarterly basis following the format of Appendix B thereof or as modified in the REC.

- For solid wastes, the following information for each class of solid waste (as defined by 10 CFR Part 61) shipped offsite during the report period will be presented in tabular form similar to that of Table 3 of Regulatory Guide 1.21.

  a. Container volume,

  b. Total curie quantity (specify whether determined by measurement or estimate),

  c. Principal radionuclides (specify whether determined by measurement or estimate,

  d. Source of waste and processing employed (e.g., dewatered spent resin, compacted dry waste, evaporator bottoms),

  e. Type of container (e.g., LSA, Type A, Type B, Large Quantity), and

  f. Solidification agent or absorbent (e.g., cement, urea formaldehyde).

- An annual summary of hourly meteorological data collected over the previous year. This annual summary may be either in the form of an hour-by-hour listing on magnetic tape of wind speed, wind direction, atmospheric stability, and precipitation (if measured), or in the form of joint frequency distributions of wind speed, wind direction, and atmospheric stability. In lieu of submission with the Radioactive Effluent Release Report, the

licensee has the option of retaining this summary of required meteorological data on site in a file that shall be provided to the NRC upon request.

- An assessment of the radiation doses due to the radioactive liquid and gaseous effluents released from the unit or station during the previous calendar year.

- An assessment of the radiation doses from radioactive liquid and gaseous effluents to MEMBERS OF THE PUBLIC due to their activities inside the SITE BOUNDARY during the report period. All assumptions used in making these assessments, i.e., specific activity, exposure time and location, shall be included in the report.

  Approximate and conservative approximate methods for determining the meteorological conditions shall be used for determining gaseous pathway doses. The assessment of radiation doses shall be performed in accordance with the methodology and parameters in the OFFSITE DOSE CALCULATION MANUAL (ODCM).

- An assessment of radiation doses to the likely most exposed MEMBER OF THE PUBLIC from reactor releases and other nearby uranium fuel cycle sources, when required by Sections 2.6 and 3.6, including doses from primary effluent pathways and direct radiation, for the previous calendar year to show conformance with 40 CFR Part 190, "Environmental Radiation Protection Standards for Nuclear Power Operation."

  Acceptable methods for calculating the dose contribution from liquid and gaseous effluents are given in Regulatory Guide 1.109 Rev. 1, October, 1977.

- A list and description of unplanned releases from the site to UNRESTRICTED AREAS of radioactive materials in gaseous and liquid effluents made during the reporting period.

- Pursuant to Controls 2.1 and 2.2, an explanation as to why the inoperability of liquid or gaseous effluent monitoring instrumentation was not corrected within the time specified.

- Pursuant to Controls 2.1 and 2.2, a discussion of all deviations from the provisions of these Controls.

- Pursuant to Control 2.7 and Table 2.7-1, Notation (a), identify the causes of the unavailability of samples for pathway analysis and identify the new locations for obtaining replacement samples. Include revised figure(s) and table for the ODCM reflecting the new locations.

- Pursuant to Table 3.3.1-1, Notation (c) and Table 3.4.1-1, Notation (b), a discussion of identifiable gamma peaks, including those of nuclides specified in Tables 3.3.1-1 and 3.4.1-1.

- Pursuant to Control 2.8, a listing of new location(s) for dose calculations and/or environmental monitoring identified by the land use census. Include revised figure(s) and table for the ODCM reflecting the new location(s).

- Pursuant to Appendix B Technical Specifications 1.2.1 and 1.3.2, a description of the events leading to liquid holdup tanks or gas storage tanks exceeding the Control limits.

- Pursuant to Appendix B Technical Specification 4.3.3, a

discussion of the major changes to radioactive liquid, gaseous, and solid waste treatment systems.

- Pursuant to Appendix B Technical Specifications 4.5.2 and 4.6.2, any changes made during the reporting period to the PROCESS CONTROL PROGRAM (PCP) and to the OFFSITE DOSE CALCULATION MANUAL (ODCM), respectively.

5.2 ANNUAL RADIOLOGICAL ENVIRONMENTAL OPERATING REPORT

An annual Radiological Environmental Operating Report covering the operation of the unit during the previous calendar year shall be submitted prior to May 1 of each year. A single submittal may be made for a multiple unit station.

The Annual Radiological Environmental Operating Report shall include:

- Summaries, interpretations, and an analysis of trends of the results of the Radiological Environmental Monitoring Program for the report period, including a comparison, as appropriate, with preoperational studies, with operational controls, and with previous environmental surveillance reports, and an assessment of the observed impacts of the plant operation on the environment.

- The results of analysis of all radiological environmental samples and of all environmental radiation measurements taken during the period pursuant to the locations specified in the tables and figures in the ODCM, as well as summarized and tabulated results of these analyses and measurements in the format of the table in the Radiological Assessment Branch Technical Position, Revision 1, November 1979. In the event that some individual results are not available for inclusion with the report, the report shall be submitted noting and explaining the reasons for the missing results. The missing data shall be submitted as soon as possible in a supplementary report.

- A summary description of the Radiological Environmental Monitoring Program.

- At least two legible maps covering all sampling locations keyed to a table giving distances and directions from the centerline of one reactor. One map shall cover stations near the site boundary and the second shall include the more distant stations.

- A discussion of the reasons for not conducting the Radiological Environmental Monitoring Program as specified by Control 2.7 and the plans for preventing recurrence.

- Pursuant to Control 2.7, a discussion of environmental sample measurements that exceed the reporting levels of Table 2.7-2 but are not the result of plant effluents.

- Pursuant to Table 2.7-1, Notation (a), a discussion of all deviations from the sampling schedule of Table 2.7-1.

- Pursuant to Table 3.7-1, Notation (c), a discussion of the contributing factors for cases in which the LLD required by Table 3.7-1 was not achievable.

- Pursuant to Table 3.7-1, Notation (a), a discussion of identifiable nuclide peaks, including those of nuclides specified in Table 3.7-1.

- Pursuant to Control 3.8, the results of the land use census.

- Pursuant to Control 2.9, the corrective actions taken to prevent a recurrence if the Interlaboratory Comparison Program is not being performed as required.

- Pursuant to Control 3.9, the results of licensee participation in the Interlaboratory Comparison Program.

5.3 SPECIAL REPORTS

In lieu of a Licensee Event Report (LER), the following special reports must be generated within 30 days:

- Pursuant to Control 2.3.2, identify the cause(s) for exceeding the specified limits for dose or dose commitment to a MEMBER OF THE PUBLIC from the release of radioactive materials in liquid effluents to UNRESTRICTED AREAS. Define the corrective action(s) taken to reduce the releases and the proposed corrective action(s) to be taken to assure subsequent releases will be in compliance with limits. Include the results of radiological analyses of the drinking water source and the radiological impact on finished drinking water supplies with regard to the requirements of 40 CFR Part 141.

- Pursuant to Control 2.3.3, explain why liquid radwaste was discharged without treatment and identify any inoperable liquid radwaste treatment system equipment or subsystems and the reason for the inoperability. Include the action(s) taken to restore the inoperable equipment to OPERABLE status and a summary description of the action(s) taken to prevent a recurrence.

- Pursuant to Control 2.4.2, identify the cause(s) for exceeding the specified limit(s) for the air dose due to radioactive noble gases released in gaseous effluents. Define the corrective actions taken to reduce the releases and define the proposed corrective actions to be taken to assure subsequent releases will be in compliance with limits specified in the Control.

- Pursuant to Control 2.4.3, identify the cause(s) for exceeding the specified limits for the dose to a MEMBER OF THE PUBLIC from the release of iodine-131, tritium, and radionuclides in particulate form with half lives greater than 8 days in gaseous effluents. Define the corrective actions taken to reduce the releases and define the proposed corrective actions to be taken to assure subsequent releases will be in compliance with limits specified in the Control.

- Pursuant to Control 2.4.4, explain why gaseous radwaste was discharged without treatment and identify inoperable gaseous radwaste treatment system equipment or subsystems and the reason for the inoperability. Include the action(s) taken to restore the inoperable equipment to OPERABLE status and a summary description of the action(s) taken to prevent a recurrence.

- Pursuant to Control 2.6 and 10 CFR Part 20.2203(a)(4), define the corrective action to be taken to reduce subsequent releases to prevent recurrence of exceeding the specified total dose limits. Include a schedule for achieving conformance with the limits and describe the course of action that should result in the limitation of the annual dose to a MEMBER OF THE PUBLIC to within the 40 CFR Part 190 limits. Include an analysis that estimates the radiation exposure (dose) to a MEMBER OF THE PUBLIC from uranium fuel cycle sources, including all effluent pathways and direct radiation, for the calendar year that includes the

releases covered by this report. Also describe the levels of radiation and the concentrations of radioactive material involved as well as the cause of the exposure levels or concentrations. Include a request, if required by the provisions of the Control, for a variance in accordance with the provisions of 40 CFR Part 190.

- Pursuant to Control 2.7, identify the cause(s) for exceeding the reporting levels of Table 2.7-2 and define the corrective actions to be taken to reduce radioactive effluents so that the potential annual dose to a MEMBER OF THE PUBLIC is less than the calendar year limits of Controls 2.3.2, 2.4.2, and 2.4.3. Report when more than one radionuclide in Table 2.7-2 is detected and

$$\frac{\text{Concentration (1)}}{\text{Reporting Level (1)}} + \frac{\text{Concentration (2)}}{\text{Reporting Level (2)}} + \ldots \geq 1.0$$

Report when radionuclides other than those in Table 2.7-2 are detected and are the result of plant effluents and the potential annual dose to a MEMBER OF THE PUBLIC is equal to or greater than the calendar year limits of Controls 2.3.2, 2.4.2, and 2.4.3.

1.0 INSTRUMENTATION AND SYSTEMS

1.1 Effluent Monitoring System Description

Effluent monitor information is provided in Table 1-1, including an indication of which monitors use effluent setpoints. Figures 2-1 and 3-1 show a schematic of the possible radioactive release points which monitor locations for gaseous and liquid pathways, respectively.

1.2 Setpoints

This section provides equations and methodology used for each alarm and trip setpoint on each effluent release point according to Radiological Effluent Controls 2.1 and 2.2.

1.2.1 Setpoints for Gaseous Effluent Monitors

Setpoints for gaseous monitors are based on the permissible discharge rate as calculated in Section 3 of the ODCM. The most restrictive setpoints (based on annual average dose limit) are used whenever practical. Higher release rates may be authorized with the proper concurrence, as delineated in Section 3.1.8. The methodology identified in Section 3, along with an isotopic mix described in Table 3.8, are used to generate the following noble gas discharge rates (normally utilized for alarm setpoints):

Permissible Discharge Rate (uCi/sec)

Basis of Limit		Iodine/Particulate*	Noble Gases
Annual Average	**	1.04E-2	3.08E+3
Quarterly Average	**	2.08E-2	6.15E+3
Instantaneous	***	1.20E+1	3.81E+4

* Half-lives greater than 8 days.

** These limits are not part of Radiological Effluent Control 2.4.1, but are included for information, as these limits are used for operational control of releases.

*** From Radiological Effluent Control 2.4.1

1.2.1.1 The Plant Vent Wide Range Gas Monitor (R-27) reads and alarms directly in uCi/sec, hence, the alarm setpoints are set directly in uCi/sec.

1.2.1.2 If the monitor reads and alarms in uCi/cc, the alarm set point is calculated as follows:

$$S = D / [(F) * (4.72E+2)]$$

where: S = Alarm setpoint in uci/cc

D = Permissible discharge rate in uCi/sec

F = Vent duct flow in ft^3/min

4.72E+2 = conversion factor (28317 cc·min/ft^3·60sec)

1.2.1.3 If the monitor reads and alarms in cpm then the alarm setpoint is calculated as follows:

$$S = D / [(F) * (4.72E+2) * (CF)]$$

where: S, D, F, and 4.72E+2 are as defined above, and

CF = Calibration factor in uCi/cc per net cpm

1.2.1.4 Normally, maximum allowable limits are calculated using a standard nuclide mix. However, setpoints may be determined based on the actual mix, on a case by case basis. This method is usually performed when the instantaneous release rate is applied.

1.2.1.5 During normal operation, the Unit 3 main plant vent is the only significant release point (>99% total). If another release point becomes significant, its permissible release rate should be apportioned with the Plant Vent's to ensure the total discharge rate for all release points remains less than the maximum permissible discharge rate.

1.2.2 <u>Setpoints for Liquid Effluent Monitors</u>

1.2.2.1 Liquid Effluent Monitors have setpoints based on limiting the concentrations in the discharge canal to the levels listed in 10 CFR 20 Appendix B, Table 2, Column 2.

1.2.2.2 For monitors that read and alarm in uCi/ml, such as the liquid waste disposal monitor (R-18), the service water monitors (R-16 A and B and R-23), and the steam generator blowdown monitor (R-19) the alarm setpoint is calculated as follows:

$$S = [(ADC)(F)]/[f] = \text{Alarm setpoint in uCi/ml}$$

where:

F = Available discharge canal dilution flow for this release in gal/min

f = calculated allowable release rate in gal/min (see section 2.2.6)

ADC = Allowed diluted concentration is the equivalent MPCW for gamma emitting isotopes weighted for total specific activity (beta and gamma emitters). This parameter is further clarified in section 2.2.

NOTE: The gamma equivalent MPCW or ADC must be used due to the insensitivity of the radiation monitor to beta emitters and the time necessary to analyze liquid releases for these beta emitters.

1.2.2.3 Alert setpoints should be used on batch liquid release monitors to ensure the contents of the batch tank have not changed since sampling. The alert setpoint is calculated as follows:

$$AS = (C)(1.25)$$

where:

AS = Alert setpoint in uCi/ml

C = Average monitor reading at time of sample

1.25 = A conservative factor based upon the mixing ratio of two tank volumes and an expected monitor response tolerance.

NOTE: Liquid Monitor alert setpoints do not control any auto functions but simply provide indication to the operators.

Figure 1-1

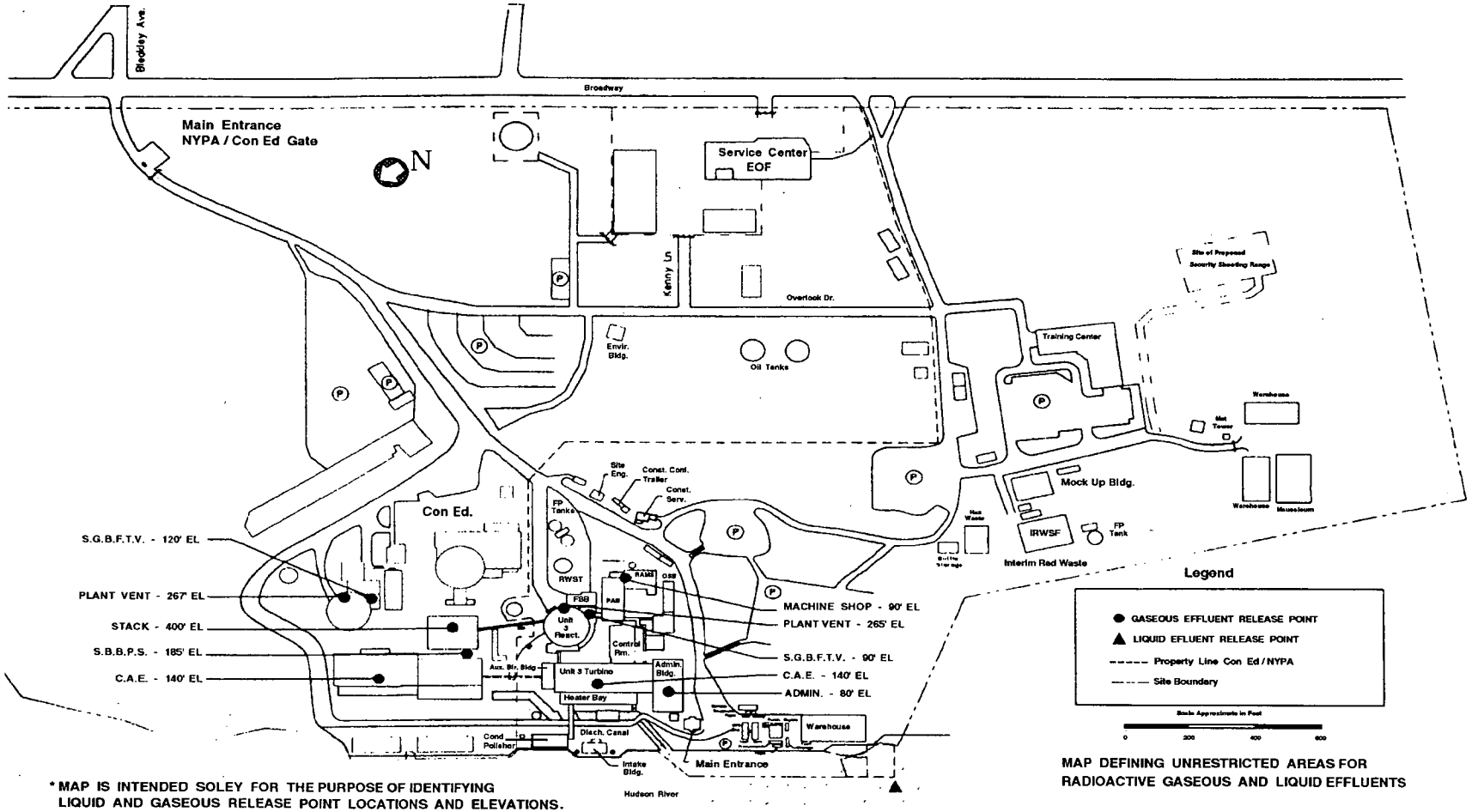

*MAP IS INTENDED SOLEY FOR THE PURPOSE OF IDENTIFYING LIQUID AND GASEOUS RELEASE POINT LOCATIONS AND ELEVATIONS. ELEVATIONS ARE FROM MEAN SEA LEVEL (MSL) SANDY HOOK, N.J.

MAP DEFINING UNRESTRICTED AREAS FOR RADIOACTIVE GASEOUS AND LIQUID EFFLUENTS

TABLE 1-1

EFFLUENT MONITORING SYSTEM DATA

CHANNEL	MONITOR DESCRIPTION	SAMPLING LOCATIONS	RANGE	EFFLUENT CONTROL FUNCTIONS	ALARM SETPOINT USED*
R-12 G	Containment Gas Monitor	Samples drawn from 32 and 35 Containment Fan Coolers	1E-7 to 1E-1 uCi/cc	Containment Ventilation Isolation	YES
R-14** G	Plant Vent Radiogas Monitor	In plant vent at approximately 105' elevation	1E+1 to 1E+6 cpm (typically 1E-6 to 1E-3 uCi/cc)	Secures waste gas tank release and Containment Ventilation Isolation	YES
R-15 G	Condenser Air Ejector Monitor	In-line detector on the air ejector exhaust header	1E-6 to 1E+0 uCi/cc	On alarm diverts air ejector flow to VC, steam to condenser priming air ejector stopped and steam to reheater secured	YES
R-20 G	Waste Gas Disposal System Monitor	Adjacent to line monitor on suction to waste gas compressors	1E-2 to 1E+3 uCi/cc	None	YES***
R-27** G	Plant Vent Wide-Range Monitor	Sample drawn from inside plant vent	1E-7 to 1E+5 uCi/cc	Secure waste gas tank release and Containment Ventilation Isolation	YES
R-46 G	Administration Building Vent Radiogas Monitor	4th Floor Administration Building Monitor Exhaust Plenum for Controlled Areas	1E+1 to 1E+6 cpm (typically 5E-8 to 5E-2 uCi/cc)	None	YES
R-59 G	RAMS Building Vent Radiogas Monitor	55' RAMS Building Monitor Exhaust Plenum	1E-6 to 1E+2 uCi/cc	None	YES

TABLE 1-1

EFFLUENT MONITORING SYSTEM DATA

CHANNEL	MONITOR DESCRIPTION	SAMPLING LOCATIONS	RANGE	CONTROL FUNCTIONS	ALARM SETPOINT USED*
R-16 A/B L	Fan Cooler And Motor Cooler Service Water Return	Adjacent to service water return line from V.C. fan cooler units and motor coolers	1E-7 to 1E-1 uCi/ml	None	YES
R-23 L	Component Cooling Heat Exchanger Service Water Monitor	Adjacent to line monitor mounted on service water return line from component cooling heat exchanger	1E-7 to 1E-1 uCi/ml	None	YES
R-18 L	Waste Disposal Liquid Effluent Monitor	in line monitor on monitor tank recirc pump discharge	1E-7 to 1E-1 uCi/ml	Terminate Monitor Tank release on alarm	YES
R-19 L	S/G Blowdown Monitor	PAB blowdown room monitors steam generator blowdown	1E-6 to 1E+2 uCi/ml	Closes blowdown isolation valves and SG sample valves	YES
R-61 L	CPF Regen Waste Release Monitor	Monitor recirc of HTDS and LTDS tanks in condensate polisher. (used when primary to secondary leakage exists)	1E-7 to 1E-1 uCi/ml	Terminates TDS tank release	YES (when P-S leak exists)

* Alarm setpoint used for effluent considerations
** If available, (R-14 or R-27 must be operating).
*** Ensures 50000 Ci limit on gas decay tanks is not exceeded.

G = Gaseous
L = Liquid

Figure 1-1

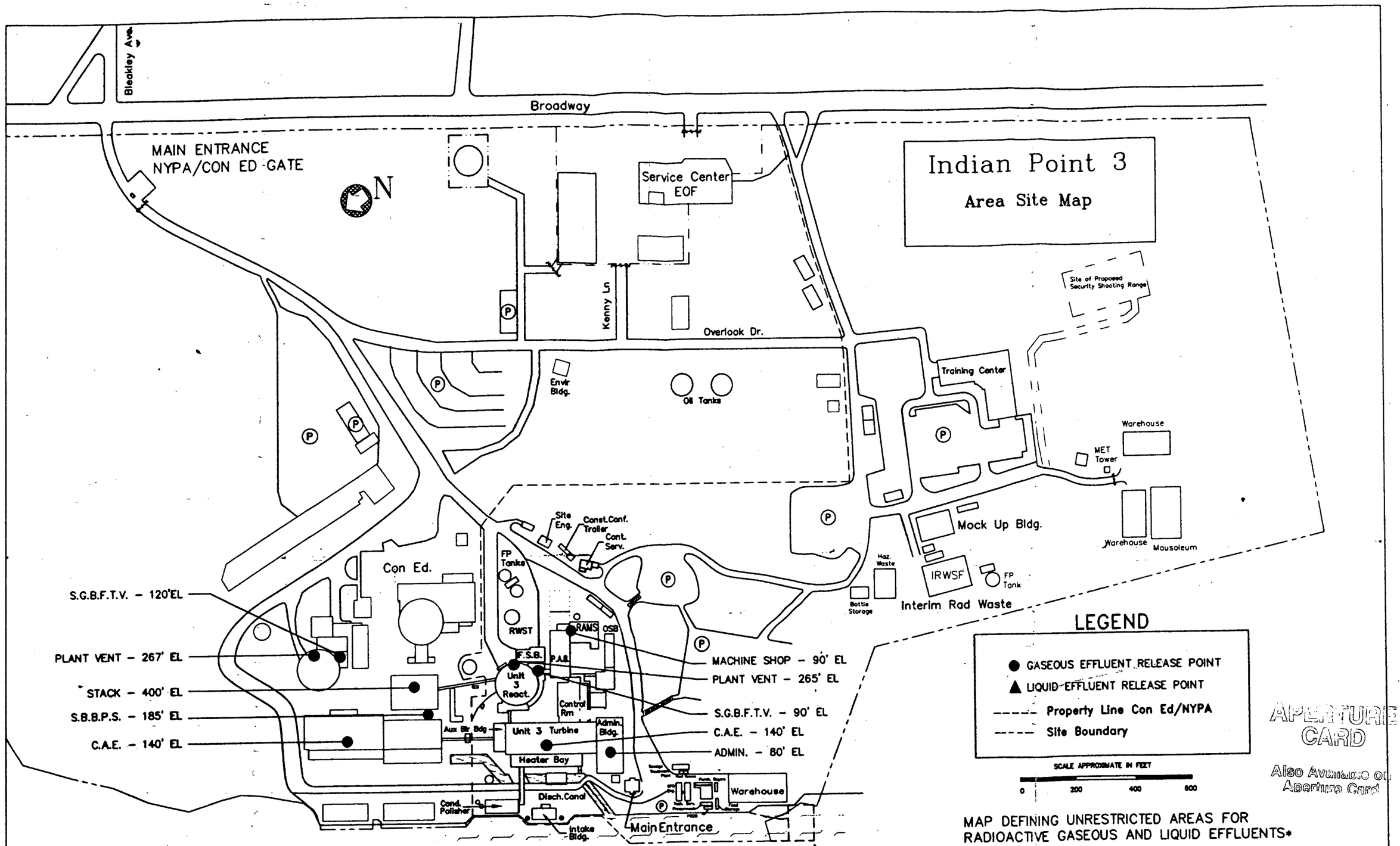

MAP DEFINING UNRESTRICTED AREAS FOR RADIOACTIVE GASEOUS AND LIQUID EFFLUENTS*

* MAP IS INTENDED SOLEY FOR THE PURPOSE OF IDENTIFYING LIQUID AND GASEOUS RELEASE POINT LOCATIONS AND ELEVATIONS. ELEVATIONS ARE FROM MEAN SEA LEVEL (MSL) SANDY HOOK, N.J.

APERTURE CARD
Also Available on Aperture Card

9908100253-02

2.0 LIQUID EFFLUENTS

2.1 Liquid Effluent Releases - General Information

2.1.1 The surveillance and lower limit of detection requirements for liquid radioactive effluents are contained in Section 3.3.1 of the Radiological Effluent Controls (RECS). Lower limit of detection calculations are listed in Appendix B.

2.1.2 A completed and properly authorized Liquid Radioactive Waste Permit should be issued prior to the release of any radioactive waste from an isolated tank to the discharge canal. A permit is required for each radioactive tank to be discharged.

2.1.3 All activity determinations for liquid radioactive effluents will be performed in such a manner as to be representative of the activity released to the river.

2.1.4 The radioactivity in liquid waste tanks shall be continuously monitored during release except as allowed by 3.1 Section 2.1 of the RECS. If the flowmeter is inoperable, the flow shall be estimated every four hours by difference in tank level or by discharge pump curves.

2.1.5 Prior to discharge, the radioactive waste tank contents shall be recirculated for at least two tank volumes. After this recirculation, and prior to discharge, a sample shall be taken and analyzed for activity with a portion of the sample set aside for composite analysis. The measured activity shall be used for calculating allowable discharge rate and the alarm setpoint for the liquid waste discharge monitor.

2.1.6 Radioactive releases of steam generator blowdown during primary-secondary leaks when released to the river should be documented on Liquid Radioactive Waste Release Permits using data supplied by the Chemistry Technician.

2.1.7 Assurance that combined liquid releases from Units 2 and 3 do not exceed Section 2.3 requirement of the RECS limits for the site are provided by administrative controls. These administrative controls are agreed to in the Memorandum of Understanding (#15) between Con Edison and the New York Power Authority concerning liquid discharge and the requirements of this document.

2.1.8 The dilution flow from Unit No. 3 should be used for calculating discharge canal concentrations during the discharge. However, by agreement with Con Edison's IP2NPP Watch Supervisor and the New York Power Authority's IP3NPP Watch Supervisor, one party can reduce or eliminate radioactive liquid waste discharge for a period of time to allow the other party to use the full site dilution flow, or a specified portion thereof, for a discharge when necessary. For time average dose calculations, allocation of dilution flow for the time period are apportioned between Unit 3 and Unit 2 per Memorandum of Understanding (#15).

2.1.9 Steam Generator Blowdown activity is determined by samples taken at least three times per week. This frequency is required by Table 4.1-2 Item 6 of Appendix A of the station's operating license. These "grab" samples of the steam generators are collected in a manner to be proportional to the rate of flow of individual steam generator to total steam generator blowdown. These samples are then analyzed for the various radionuclides at the frequencies specified in Table 3.3.1-1 of the RECS. (Further flow proportional composites are made where appropriate.) (Ref: NUREG 0472, REV. 3, DRAFT 6, TABLE 4.11-1.)

2.1.10 The discharge canal flow rate is determined by the use of pump flow characteristics curves. The normal flow for condenser cooling pumps is 140,000 gpm when operating at maximum speed. During the cold weather months, the condenser cooling pumps are operating at reduced speed. This reduced flow is nominally 64,000 gpm (Ref: NUREG 0472, REV. 3, DRAFT 6, TABLE 3.3-12).

2.1.11 Radioactivity content in outdoor tanks is to be limited to less than 10 curies, excluding tritium and noble gas, as per section 1.2.1, Appendix B of the Technical Specifications. Compliance with this requirement is demonstrated by limiting the radioactive concentration in these tanks to the value which results in 10 curies when the tank is at full liquid capacity, except as modified below. The radioactive concentration limits for these tanks are:

RWST: $$\frac{10 \text{ curies} \times 10^6\ \mu\text{Ci/curie}}{358{,}500 \text{ gals} \times 3785 \text{ ml/gal}} = 7.3 \times 10^{-3}\ \mu\text{Ci/ml}$$

PWST: $$\frac{10 \text{ curies} \times 10^6\ \mu\text{Ci/curie}}{165{,}000 \text{ gals} \times 3785 \text{ ml/gal}} = 1.6 \times 10^{-2}\ \mu\text{Ci/ml}$$

31 & 32 MT:

$$\frac{10 \text{ curies} \times 10^6\ \mu\text{Ci/curie}}{11{,}750 \text{ gals} \times 3785 \text{ ml/gal}} = 2.2 \times 10^{-1}\ \mu\text{Ci/ml}$$

Outside Temporary Tanks:

$$\frac{10 \text{ curies} \times 10^6\ \mu\text{Ci/curie}}{\text{Volume in gals} \times 3785 \text{ ml/gal}} = \mu\text{Ci/ml}$$

The refueling water storage tank has the potential to be filled from the reactor cavity with liquid which exceeds the limits stated. Therefore, prior to filling the RWST from the reactor cavity after refueling operations, the reactor cavity (or residual heat removal system) must be sampled for radioactivity and action taken to ensure that the total activity in the tank does not exceed 10 curies.

Outside temporary tanks should not be filled with liquid which could exceed the concentration limit calculated. Therefore, prior to transfer to outside tanks, the source of liquid shall be sampled for radioactivity. If it exceeds the concentration limit calculated, action shall be taken to ensure that the total activity in the tank does not exceed 10 curies (Ref: NUREG 0472, REV. 3, DRAFT 6, TABLE 3.11.1.4).

2.1.12 There are no continuous composite samples for steam generator blowdown. The method of determining release concentrations is indicated below:

Individual blowdown flow rate to the river (by flowmeter or by flow curves) multiplied by sample blowdown concentration equals composite activity being released. In addition, R-19 monitors the composite steam generator blowdown released (Ref: NUREG 0472, REV. 3, DRAFT 6, TABLE 3.3-12).

2.1.13 The service water radioactivity monitor listed in Table 2.1-1 of the RECS is defined as the process radiation monitors which monitor components discharging into or are cooled by the service water system. These process radiation monitors are:

R-16 A or B:	Fan Cooler and Motor Cooler unit service water return monitors
R-23:	Component cooling service water return
R-18:	Liquid release monitor (separate release point)
R-19:	Steam generator blowdown radioactivity monitor (separate release point)

If all monitors on the effected release path are taken out of service and the removal of that monitor from service is not specifically addressed in the Radiological Environmental Controls, samples shall be taken every 12 hours or releases may not continue via this pathway. Samples may be taken on the affected monitored stream or on the service water system (Ref: NUREG 0472, REV. 3, DRAFT 6, TABLE 3.3-12).

2.1.14 Liquid effluent concentrations must be within the limitations of 2.3.1 of the RECS. The total dose per quarter and per year must be within the limitations of 2.3.2 of the RECS (Ref: NUREG 0472, REV. 3, DRAFT 6, TABLE 3.11.1.1).

2.1.15 There are no drinking water intakes within 3 miles of the site on the Hudson River (see Section 2.4.1 for further details) (Ref: NUREG 0472, REV. 3, DRAFT 6, TABLE 3.11.1.2).

2.1.16 A turbine hall drain system which would collect leakage of contaminated secondary plant waters during operation does not exist at IP3. The sumps which are present in the turbine hall five foot elevation receive drains from areas containing secondary plant components at sub-atmospheric pressures. These sumps would not meet the intent of the NUREG 0472.

The activity released to the environment via this pathway is negligible when steam generator blowdown activity is less than 3E-5 uCi/ml. Activity released via this pathway when steam generator activity exceeds 3E-5 uCi/ml is determined by the following method:

Turbine Hall Drain Effluent Activity	=	Feedwater Specific Activity	* {	Steam Plant Makeup Rate	-	S/G Blowdown rate to the River	}

(Ref: NUREG 0472, REV. 3, DRAFT 6, TABLE 3.3-12)

2.1.17 Carbon 14 is released at a rate of .07 curies per GW(e).yr with an average make up rate of 0.5 gal/min based upon studies performed by the New York State Department of Health. The estimate of Carbon 14 releases are included in the Radiological Impact on Man section of the Semi-annual Radioactive Effluent Release Report. These estimates are not included in dose calculations for routine releases.

2.1.18 The condensate polisher regenerant waste is routinely analyzed for radioactivity and is normally a non-radioactive release point. The monitoring program for this release point is consistent with the direction set forth in NRC IE Bulletin 80-10 "Contamination of Non-radioactive Systems and Resulting Potential for Unmonitored, Uncontrolled Release of Radioactivity to Environment". Should the system become radioactive, releases from this system will be in accordance with the requirements for batch waste release tanks listed in the RECS.

2.1.19 The liquid waste monitor tanks have an airborne release pathway. The original plant design limited the gases through this pathway by reducing the entrained gases to less than 2E-3 uCi/ml. When the entrained gas concentration in the monitor tank inlet exceeds 2E-3 uCi/ml, the noble gas release will be quantified by calculating the difference (in uCi's) between the gaseous activity added to the tank and the gaseous activity present in the effluent release sample. This difference will be the activity released through the tank vents and is quantified as an airborne release.

2.2 Liquid Effluent Concentrations

2.2.1 This section provides a description of the means that will be used to demonstrate compliance with Radiological Effluent Control 2.3.1.

2.2.2 Compliance with the instantaneous limits of 10CFR20 is achieved by observance of discharge limits and described in Section 2.1.14. Normally for instantaneous release rate purposes, only dilution water from Unit 3 circulators is taken credit for, except as allowed by the Memorandum of Understanding between NYPA and Con Edison. A monthly report is issued which summarizes the radioactive releases from the site for the preceding month. This report provides information necessary to comply with quarterly and annual average limitations on discharge.

2.2.3 Each isolated liquid waste tank must be recirculated for at least two tank volumes prior to sampling in order to ensure a representative sample is obtained. A default minimum recirculation time may be used for 31 and 32 monitor tank in lieu of the actual calculation. This value is 4 hours, based upon the following calculation:

$$\frac{11750\ gals \cdot 2\ Tank\ Volumes}{100\ gal/\text{min}} = 3.9\ Hours \approx 4\ Hours$$

Note: 100 gpm is the recirculation flow rate as determined by pump curves.

2.2.4 The concentration in liquid effluents prior to dilution in the discharge canal is determined by sampling prior to release for batch releases. For continuous release the concentration can be determined by either grab sampling as in the batch release method or by direct reading radiation monitor. If the process radiation monitor is utilized care should be taken to ensure the calibration factor used is appropriate for the mixture being released.

For non-direct reading monitors, the following calculation is used.

$$C = CF * CR$$

C = Concentration of liquid effluent (uCi/ml) prior to dilution.

CF = Conversion factor of monitor $\frac{(uCi/ml)}{ncpm}$

CR = Count rate of monitor (ncpm)

2.2.5 The final diluted concentration in the discharge canal is determined by the following:

$$CD = (C) * (f) / (F)$$

Where: CD = Diluted concentration in the discharge canal in uCi/ml

C = Concentration in the liquid to be released prior to dilution in uCi/ml

F = Dilution flow in the discharge canal in gal/min

f = Release rate of liquid effluent in gal/min

NOTE: This equation is not used for calculating allowable release rates.

2.2.6 Calculation of Maximum Permissible Concentration in liquid effluents

a. This section describes the methodology used to ensure the requirements of section 2.3.1 of the RECS are satisfied. The total discharge canal concentration of radionuclides must be maintained less than those identified by section 2.3.1 of the RECS. The noble gases will be included using the limit 2E-4 uCi/ml as specified in section 2.3.1 of the RECS. This will normally be ensured by using an Allowed Dilution Concentration on each discrete release. This differs from the ADC calculated in 10CFR20 appendix B in that for radioisotopes that do not have gammas greater than 60 kev emitted during decay, default values are included to estimate their contribution. The Allowed Diluted Concentration is calculated as follows:

$$ADC = \frac{MPCW}{1+\frac{CB}{CG}}$$

Where:

ADC = Allowed diluted concentration in uCi/ml

$MPCW_t$ = Maximum permissible concentration in water for all isotopes (beta & gamma), in uCi/ml

CB = The concentration of the non gamma emitters, in uCi/ml

CG = The concentration of the gamma emitters in uCi/ml

b. A representative sample must be obtained. In the case of a batch release this is ensured by having the contents of the tank recirculated for at least two tank volumes after the tank has been isolated. The minimum recirculation time is determined as follows:

NOTE: As stated in Section 2.2.3, a default recirculation time for 31 and 32 monitor tanks of 4 hours maybe used to simplify routine calculations.

$$T = 2 (V) / (G)$$

Where:

T = Minimum recirculation time in min

V = Volumes in the tank to be discharged, in gal

G = Recirculation rate in gal/min

c. After the tank has been sampled, determine the Allowed Diluted Concentration as per step 2.2.6a.

d. Determine if other liquid radioactive discharges are being made from this unit and obtain the radioactive concentration and discharge rate. If another release is occurring, the available dilution flow must be adjusted. This may be performed by allocation or by calculation. The adjusted dilution flow is calculated as follows:

$$E = \frac{Dr \cdot CG}{ADC}$$

Where:

Dr = Current release discharge rate (gpm)

E = Required dilution flow for current release (gpm)

CG = Total concentration of gamma emitting isotopes in current release (μCi/ml)

ADC = Allowed diluted concentration for current release (μCi/ml)

e. Calculate the permissible discharge rate as follows:

$$D = \frac{ADC \cdot B}{CG}$$

Where: ADC = Allowed diluted concentration as calculated in Step 2.2.6.a, in uCi/ml

D = Permissible discharge rate in gal/min

B = Adjusted dilution flow from the unit, in gpm, from Step 2.2.6.d, above, as follows:

B	=	Available Dilution Flow	-	Required Dilution Flow (E)

CG = Gamma emitter concentration in uCi/ml

2.3 Liquid Effluent Dose Calculation Requirements

2.3.1 Section 2.3.2 of the Radiological Effluent Controls requires that the dose or dose commitment above background to an individual in an unrestricted area from radioactive materials in liquid effluents released from each reactor unit shall be limited:

a) During any calendar quarter: Less than or equal to 1.5 mrem to the total body and to less than or equal to 5 mrem to any organ.

b) During any calendar year: Less than or equal to 3 mrem to the total body and to less than or equal to 10 mrem to any organ.

NOTE: If either of the above limits is exceeded by a factor of two or more, then cumulative dose contributions from direct radiation would be determined by evaluation of existing perimeter and environmental TLDs per RECS 2.6.A.

2.3.2 Section 2.3.3 of the Radiological Effluent Controls requires that appropriate portions of the radwaste treatment system be used to reduce the radioactive material in liquid waste prior to their discharge when the projected dose due to liquid effluent from each reactor unit when averaged over 31 days, would exceed 0.06 mrem to the total body or 0.2 mrem to any organ. Doses due to liquid release shall be projected at least once per 31 days.

These doses are projected based on the dose methodology in Section 2.4. or 2.5. The average of previous months' doses is used to project future dose.

2.3.3 Section 2.3.1 of Radiological Effluent Controls require that the concentration of radioactive material released from the site shall be limited to 10 times the concentration values specified in 10 CFR Part 20, Appendix B, Table 2, Column 2 for radionuclides other than dissolved or entrained noble gases. For dissolved or entrained noble gases the concentration shall be limited to 2E-4 uCi/ml total activity.

2.4 Dose Methodology (Computer Calculation)

2.4.1 NUREG 0133 (Ref. 1, Section 4.3, Pg. 14) states that cumulative dose contributions should consider the dose contribution from the maximum exposed individual's consumption of fish, invertebrates, and potable water as appropriate. The river at IP3NPP is considered to be fresh water when in reality it is a tidal estuary and never completely fresh. Observed average chlorosity at IP3NPP has ranged as high as 2.5 g/l or about 13% sea water and 87% fresh water. Hence, use of the Hudson River for water supply purposes is precluded south of Chelsea (mile point 65) which is the nearest point of potable water supply. Radionuclide concentrations in the nearest water supply have been calculated (Ref. 2) to be a factor of at least 500 lower than the river water in the Indian Point area. Exposures from ingestion of drinking water is therefore negligible.

Based on these factors, potable water consumption is not considered to be a pathway at IP3NPP. Thus, at IP3NPP, the cumulative dose considers only the dose contributions from the maximum exposed individuals consumption of fish and invertebrates. Tables of dose factors for three age groups were developed as per Section 2.4.3 and are included as Tables 2-1, 2-2, and 2-3. (Infant dose factors are 0 and are not included).

2.4.2 The relationships and methods that form the calculational base for dose accounting for the liquid effluent pathway are described in this section. These relationships can be used to meet the calculational requirements of Section 2.3.1. The cumulative dose factors (AiT) are calculated in Section 2.4.3. The following equation is generally applicable and can be used for any number of isotopes released over any time period. The equation for D(T) is to be summed over all i nuclides:

$$D(T) = AiT = \sum_{k=1}^{n} (dtk)(Cik)(Fk)$$

Where:

D(T) = The cumulative dose commitment to the total body or any organ, T, from liquid effluents for the total time period equal to the sum from k=1 to n of dtk, in mrem.

dtk = The length of the kth time period over which Cik and Fk are averaged for all liquid releases, in hours.

Cik = The average concentration of radionuclide, i, in undiluted liquid effluent during time period dtk from any liquid release, in μCi/ml.

n = The total number of releases considered.

AiT = The site related ingestion dose commitment factor to the total body or any organ for each IP3NPP identified principal gamma and beta emitter listed in Table 2-1, 2-2, and 2-3, in mrem-ml per hr-μCi.

Fk = The near field average dilution factor for Cik during any liquid effluent releases. Defined as the ratio of the maximum undiluted liquid waste flow during release to the average flow from the site discharge structure to unrestricted receiving waters, times an applicable factor.

The term Cik is the composite undiluted concentration of radioactive material in liquid waste at the release point as determined by the radioactive liquid waste sampling and analysis program as contained in the Radiological Effluent Controls. All dilution factors beyond the sample point are included in the Fk and AiT terms.

The term Fk is a near field average dilution factor and is determined as follows:

$$Fk = \frac{\text{Liquid Radioactive Waste Flow}}{[\text{Discharge Structure Exit Flow} * \text{Applicable Factor}]}$$

The liquid radioactive waste flow is the flow from all continuous and batch radioactive effluent releases specified in the Radiological Effluent Controls from all liquid radioactive waste management systems. The discharge structure exit flow is the average flow during disposal from the discharge structure release point into the receiving body of water. Based on studies by New York University Medical Center (ref. 14 page 7). the appropriate "Applicable Factor" is 5.

In order to accurately determine Fk, it is calculated based on actual dilution flow from its site for the time period considered. This affords a quantitative assessment of radiation dose resulting from liquid effluent releases at IP3NPP. The determination and use of dilution factors is discussed in Section 2.2.

2.4.3 Dose Factor for Liquid Effluent Calculations

2.4.3.1 The equation for dose from liquid effluents requires the use of a dose factor AiT for each nuclide, i, which embodies the dose factors, pathway transfer factor, pathway usage factors, and dilution factors for the points of pathway origin. IP3NPP has followed the guidance of NUREG 0133 and has calculated AiT for the total body and critical organ of the maximum exposed individual (e.g. the adult). All the factors needed in the equation were obtained from Regulatory Guide 1.109 (Ref. 3) with the exception of the fish and invertebrate bioaccumulation factors (BFi and BIi) for Cesium, Niobium, Silver, and Antimony.

For Cesium a site specific factor of 224 was used instead of the 2,000 presented in Table A-1 of the Regulatory Guide for fish. Similarly, a factor of 224 was used for invertebrates instead of the Regulatory Guide value of 1000. For Silver, the fish and invertebrate factors are 2.3 and 3300, respectively. For Niobium, the fish and invertebrate factors are 300 and 100 respectively. For Antimony, the fish and invertebrate factors are 1 and 300 respectively. The justification for these substitutions is discussed in Section 2.6. The summary dose factor is as follows:

$$AiT = K[(UF)BFi + (UI)BIi]DFi$$

Where:

AiT = Composite dose parameter for the total body or critical organ for nuclide, i, for all appropriate pathways, mrem/hr per μCi/ml.

K = Units conversion factor, 114155 = (1E6pCi/μCi) (1E3ml/kg) / 8760 hr/yr

UF = kg/yr fish consumption from Table E-5 of Regulatory Guide 1.109:

21	Adult	6.9	Child
16	Teen	0	Infant

BFi = Bioaccumulation factor for nuclide, i, in fish pCi/kg per pCi/l from Table A-1 of Regulatory Guide 1.109.

UI = kg/yr invertebrate consumption from Table E-5 of Regulatory Guide 1.109:

5.0	Adult	1.7	Child
3.8	Teen	0	Infant

BIi = Bioaccumulation factor for nuclide, i, in invertebrates, pCi/kg per pCi/l from Table A-1 of Regulatory Guide 1.109.

DFi = Dose conversion factor for nuclide, i, for age groups in pre-selected organs, T, in mrem/pCi, from Tables E-11, 12 & 13 of Regulatory Guide 1.109.

IP3NPP has compiled AiT factors for 3 age groups and various organs for the maximum exposed individual. These are included as Table 2-1, 2-2, and 2-3. For completeness, this table includes all isotopes found in Reg Guide 1.109, however, several isotopes listed are not routinely identified at IP-3. In addition, the values for Antimony, Silver, Cesium, and Niobium are site specific as previously discussed.

2.5 Backup Calculation Methodology

These methods provide backup calculations identical to those performed in Section 2.4

2.5.1 An alternate computer method which completely complies with Section 2.4 should be used when the primary computer system is inoperable.

2.5.2 Hand Calculations which completely comply with Section 2.4 can be employed if the primary and secondary computer codes are inoperable. Because they are time consuming and subject to calculational errors, procedural guidance in the actual flow of calculations should be used to maintain a standard format. These procedures are also used for periodic benchmark tests of the computer codes.

2.6 Site Specific Bio-Accumulation & Dose Factors

2.6.1 As stated in Section 2.4.3 the bioaccumulation factor (BFi) for Cesium in fish is assumed to be 224 instead of the 2000 listed in Regulatory Guide 1.109 (Ref. 3). Similarly, the bioaccumulation factor for invertebrates is 224. This is based on the fact that the Hudson River at IP3NPP is not completely fresh, the Bioaccumulation Factor for salt water is 40 (Ref. 2), and that the behavior of Cesium in the Hudson is a complex phenomenon.

The NYU Study (Ref. 2) shows that Cesium concentrations in fish are regulated at a relatively constant value independent of the concentration of Cesium in water, and the bioaccumulator factors are thus inversely proportional to the water concentration of Cesium. This explains the lower bioaccumulation factor for Cesium reported by numerous investigators for salt water fish as opposed to fresh water fish because of the higher stable Cesium content of sea water. The NYU Report states that water at Indian Point has a dissolved Cesium concentration which is much higher than would be expected from simple mixing between sea water and fresh water and postulates that these higher concentrations result from leaching of Cesium from bottom sediment by saline water.

Use of the bioaccumulation factors of Regulatory Guide 1.109 for a fresh water site will thus substantially overestimate fish ingestion doses because no account is taken of the phenomena just discussed. However, radiocesium concentrations in fish may still be estimated through the use of a bioaccumulation factor, provided that this factor is determined from the body of water of interest. This factor has been estimated (Ref. 12, page 33) to be about 224 for the flesh of indigenous fish caught in the Indian Point area. In contrast, the Cesium fresh water bioaccumulation factor presented by Regulatory Guide 1.109 for fish is 2000.

Fish ingestion doses would therefore be overestimated by a factor of 13 if the Regulatory Guide values were used.

Similarly for invertebrates, the site specific bioaccumulation factor of 224 is used. This is larger than the value of 25 given in Reg Guide 1.109 for salt water invertebrates.

A second conservatism in the NRC model concerns the location at which the concentrations in the river of the discharged Cesium are evaluated. Use of this model implies that these fish have grown directly in such a location prior to being caught, which is unrealistic and adds about a factor of five in conservation. This conservatism remains in the calculation, thus the use of the NYU (Ref. 12) bioaccumulation factor is justifiable since this remains as a conservative calculation.

2.6.2 No bioaccumulation factor for Silver is listed in Rev. 1 of Regulatory Guide 1.109, Table A-1. The values of 2.3 and 3300 for fish and invertebrates were obtained from ERDA publication 660 (March 1976), Oak Ridge National Laboratories and are included in the ODCM in the interests of increased accuracy since Ag110m is a potential component of IP3NPP liquid releases.

2.6.3 International Atomic Energy Agency Report No. 57 provides data more recent than that presented in Regulatory Guide 1.109 for niobium bioaccumulation factors. The factor in the Regulatory Guide appears to be substantially overconservative and, therefore, the more recent IAEA information is incorporated into the dose calculation methodology for liquid releases of radioniobium. The values from Table XVII of IAEA No. 57 are 300 and 100 for freshwater fish and marine invertebrates respectively and are incorporated into this ODCM.

2.6.4 Antimony isotopes are not listed in Reg. Guide 1.109. As for Niobium above, IAEA Report No. 57 was used to provide bioaccumulation factors for the Antimony isotopes in Table 2-1. Dose factors were calculated for Antimony as per Reference #13.

2.6.5 In summary, with the exception of the bioaccumulation factors discussed above, all remaining factors are as follows: fish factors are for fresh water and invertebrate factors are for salt water.

Table 2 - 1

Site Related Adult Ingestion Dose Commitment Factors
(Freshwater Fish and Saltwater Invertebrate Consumption)

(AiT)
mR/hr per uCi/ml

ISOTOPE	BONE	LIVER	TOT BODY	THYROID	KIDNEY	LUNG	GI-LLI
H-3	0.00E+00	2.82E-01	2.82E-01	2.82E-01	2.82E-01	2.82E-01	2.82E-01
BE-7	3.29E-01	7.45E-01	3.69E-01	0.00E+00	7.83E-01	0.00E+00	1.28E+02
NA-24	4.08E+02	4.08E+02	4.08E+02	4.08E+02	4.08E+02	4.08E+02	4.08E+02
P-32	4.96E+07	3.08E+06	1.92E+06	0.00E+00	0.00E+00	0.00E+00	5.57E+06
CR-51	0.00E+00	0.00E+00	4.31E+00	2.58E+00	9.50E-01	5.72E+00	1.08E+03
MN-54	0.00E+00	5.43E+03	1.04E+03	0.00E+00	1.61E+03	0.00E+00	1.66E+04
MN-56	0.00E+00	1.37E+02	2.42E+01	0.00E+00	1.73E+02	0.00E+00	4.36E+03
FE-55	3.21E+04	2.21E+04	5.16E+03	0.00E+00	0.00E+00	1.24E+04	1.27E+04
FE-59	5.06E+04	1.19E+05	4.56E+04	0.00E+00	0.00E+00	3.32E+04	3.96E+05
CO-58	0.00E+00	5.15E+02	1.15E+03	0.00E+00	0.00E+00	0.00E+00	1.04E+04
CO-60	0.00E+00	1.48E+03	3.26E+03	0.00E+00	0.00E+00	0.00E+00	2.78E+04
NI-63	4.97E+04	3.45E+03	1.67E+03	0.00E+00	0.00E+00	0.00E+00	7.19E+02
NI-65	2.02E+02	2.62E+01	1.20E+01	0.00E+00	0.00E+00	0.00E+00	6.65E+02
CU-64	0.00E+00	9.08E+01	4.26E+01	0.00E+00	2.29E+02	0.00E+00	7.74E+03
ZN-65	1.61E+05	5.13E+05	2.32E+05	0.00E+00	3.43E+05	0.00E+00	3.23E+05
ZN-69	3.43E+02	6.57E+02	4.57E+01	0.00E+00	4.27E+02	0.00E+00	9.87E+01
BR-83	0.00E+00	0.00E+00	4.05E+01	0.00E+00	0.00E+00	0.00E+00	5.84E+01
BR-84	0.00E+00	0.00E+00	5.25E+01	0.00E+00	0.00E+00	0.00E+00	4.13E-04
BR-85	0.00E+00	0.00E+00	2.16E+00	0.00E+00	0.00E+00	0.00E+00	0.00E+00
RB-86	0.00E+00	1.01E+05	4.72E+04	0.00E+00	0.00E+00	0.00E+00	2.00E+04
RB-88	0.00E+00	2.91E+02	1.54E+02	0.00E+00	0.00E+00	0.00E+00	4.02E-09
RB-89	0.00E+00	1.93E+02	1.35E+02	0.00E+00	0.00E+00	0.00E+00	1.12E-11
SR-89	2.57E+04	0.00E+00	7.37E+02	0.00E+00	0.00E+00	0.00E+00	4.12E+03
SR-90	6.32E+05	0.00E+00	1.55E+05	0.00E+00	0.00E+00	0.00E+00	1.82E+04
SR-91	4.72E+02	0.00E+00	1.91E+01	0.00E+00	0.00E+00	0.00E+00	2.25E+03
SR-92	1.79E+02	0.00E+00	7.75E+00	0.00E+00	0.00E+00	0.00E+00	3.55E+03
Y-90	6.07E+00	0.00E+00	1.63E-01	0.00E+00	0.00E+00	0.00E+00	6.43E+04
Y-91M	5.73E-02	0.00E+00	2.22E-03	0.00E+00	0.00E+00	0.00E+00	1.68E-01
Y-91	8.89E+01	0.00E+00	2.38E+00	0.00E+00	0.00E+00	0.00E+00	4.89E+04
Y-92	5.33E-01	0.00E+00	1.56E-02	0.00E+00	0.00E+00	0.00E+00	9.33E+03
Y-93	1.69E+00	0.00E+00	4.67E-02	0.00E+00	0.00E+00	0.00E+00	5.36E+04
ZR-95	1.63E+00	5.22E-01	3.54E-01	0.00E+00	8.20E-01	0.00E+00	1.66E+03
ZR-97	9.00E-02	1.82E-02	8.30E-03	0.00E+00	2.74E-02	0.00E+00	5.63E+03
NB-95	4.83E+00	2.69E+00	1.44E+00	0.00E+00	2.65E+00	0.00E+00	1.63E+04
MO-99	0.00E+00	1.28E+02	2.43E+01	0.00E+00	2.90E+02	0.00E+00	2.97E+02
TC-99M	1.59E-02	4.50E-02	5.73E-01	0.00E+00	6.84E-01	2.21E-02	2.66E+01
TC-101	1.64E-02	2.36E-02	2.32E-01	0.00E+00	4.25E-01	1.21E-02	7.09E-14
RU-103	1.10E+02	0.00E+00	4.74E+01	0.00E+00	4.20E+02	0.00E+00	1.28E+04
RU-105	9.16E+00	0.00E+00	3.62E+00	0.00E+00	1.18E+02	0.00E+00	5.60E+03
RU-106	1.64E+03	0.00E+00	2.07E+02	0.00E+00	3.16E+03	0.00E+00	1.06E+05
AG-110M	3.02E+02	2.80E+02	1.66E+02	0.00E+00	5.50E+02	0.00E+00	1.14E+05
SB-122	3.47E+01	7.99E-01	1.20E+01	5.38E-01	0.00E+00	2.08E+01	1.32E+04
SB-124	4.86E+02	9.20E+00	1.91E+02	1.18E+00	0.00E+00	3.79E+02	1.38E+04
SB-125	3.11E+02	3.47E+00	7.40E+01	3.16E-01	0.00E+00	2.40E+02	3.42E+03

Table 2 - 1

Site Related Adult Ingestion Dose Commitment Factors
(Freshwater Fish and Saltwater Invertebrate Consumption)

(AiT)
mR/hr per uCi/ml

ISOTOPE	BONE	LIVER	TOT BODY	THYROID	KIDNEY	LUNG	GI-LLI
TE-125M	2.72E+03	9.87E+02	3.65E+02	8.19E+02	1.11E+04	0.00E+00	1.09E+04
TE-127M	6.88E+03	2.46E+03	8.38E+02	1.76E+03	2.79E+04	0.00E+00	2.31E+04
TE-127	1.12E+02	4.01E+01	2.42E+01	8.28E+01	4.55E+02	0.00E+00	8.82E+03
TE-129M	1.17E+04	4.36E+03	1.85E+03	4.01E+03	4.88E+04	0.00E+00	5.88E+04
TE-129	3.19E+01	1.20E+01	7.77E+00	2.45E+01	1.34E+02	0.00E+00	2.41E+01
TE-131M	1.76E+03	8.60E+02	7.16E+02	1.36E+03	8.71E+03	0.00E+00	8.53E+04
TE-131	2.00E+01	8.36E+00	6.32E+00	1.65E+01	8.77E+01	0.00E+00	2.83E+00
TE-132	2.56E+03	1.66E+03	1.55E+03	1.83E+03	1.60E+04	0.00E+00	7.83E+04
I-130	4.88E+01	1.44E+02	5.68E+01	1.22E+04	2.24E+02	0.00E+00	1.24E+02
I-131	2.68E+02	3.84E+02	2.20E+02	1.26E+05	6.58E+02	0.00E+00	1.01E+02
I-132	1.31E+01	3.50E+01	1.23E+01	1.23E+03	5.58E+01	0.00E+00	6.58E+00
I-133	9.16E+01	1.59E+02	4.86E+01	2.34E+04	2.78E+02	0.00E+00	1.43E+02
I-134	6.84E+00	1.86E+01	6.64E+00	3.22E+02	2.95E+01	0.00E+00	1.62E-02
I-135	2.86E+01	7.48E+01	2.76E+01	4.93E+03	1.20E+02	0.00E+00	8.45E+01
CS-134	4.14E+04	9.84E+04	8.04E+04	0.00E+00	3.18E+04	1.06E+04	1.72E+03
CS-136	4.33E+03	1.71E+04	1.23E+04	0.00E+00	9.51E+03	1.30E+03	1.94E+03
CS-137	5.30E+04	7.25E+04	4.75E+04	0.00E+00	2.46E+04	8.18E+03	1.40E+03
CS-138	3.67E+01	7.25E+01	3.59E+01	0.00E+00	5.33E+01	5.26E+00	3.09E-04
BA-139	6.47E+00	4.61E-03	1.89E-01	0.00E+00	4.31E-03	2.61E-03	1.15E+01
BA-140	1.35E+03	1.70E+00	8.87E+01	0.00E+00	5.78E-01	9.73E-01	2.79E+03
BA-141	3.14E+00	2.37E-03	1.06E-01	0.00E+00	2.21E-03	1.35E-03	1.48E-09
BA-142	1.42E+00	1.46E-03	8.93E-02	0.00E+00	1.23E-03	8.27E-04	2.00E-18
LA-140	1.58E+00	7.95E-01	2.10E-01	0.00E+00	0.00E+00	0.00E+00	5.83E+04
LA-142	8.07E-02	3.67E-02	9.15E-03	0.00E+00	0.00E+00	0.00E+00	2.68E+02
CE-141	3.23E+00	2.18E+00	2.48E-01	0.00E+00	1.01E+00	0.00E+00	8.35E+03
CE-143	5.69E-01	4.21E+02	4.66E-02	0.00E+00	1.85E-01	0.00E+00	1.57E+04
CE-144	1.68E+02	7.04E+01	9.04E+00	0.00E+00	4.17E+01	0.00E+00	5.69E+04
PR-143	5.80E+00	2.33E+00	2.88E-01	0.00E+00	1.34E+00	0.00E+00	2.54E+04
PR-144	1.90E-02	7.88E-03	9.65E-04	0.00E+00	4.45E-03	0.00E+00	2.73E-09
ND-147	3.97E+00	4.59E+00	2.74E-01	0.00E+00	2.68E+00	0.00E+00	2.20E+04
W-187	2.98E+02	2.49E+02	8.71E+01	0.00E+00	0.00E+00	0.00E+00	8.16E+04
NP-239	3.53E-02	3.47E-03	1.91E-03	0.00E+00	1.08E-02	0.00E+00	7.12E+02
K-40	0.00E+00	0.00E+00	0.00E+00	0.00E+00	0.00E+00	0.00E+00	0.00E+00
CO-57	0.00E+00	1.21E+02	2.01E+02	0.00E+00	0.00E+00	0.00E+00	3.07E+03
SR-85	0.00E+00	0.00E+00	0.00E+00	0.00E+00	0.00E+00	0.00E+00	0.00E+00
Y-88	0.00E+00	0.00E+00	0.00E+00	0.00E+00	0.00E+00	0.00E+00	0.00E+00
NB-94	0.00E+00	0.00E+00	0.00E+00	0.00E+00	0.00E+00	0.00E+00	0.00E+00
NB-97	4.05E-02	1.02E-02	3.74E-03	0.00E+00	1.20E-02	0.00E+00	3.78E+01
CD-109	0.00E+00	0.00E+00	0.00E+00	0.00E+00	0.00E+00	0.00E+00	0.00E+00
SN-113	0.00E+00	0.00E+00	0.00E+00	0.00E+00	0.00E+00	0.00E+00	0.00E+00
BA-133	0.00E+00	0.00E+00	0.00E+00	0.00E+00	0.00E+00	0.00E+00	0.00E+00
TE-134	3.29E+01	2.15E+01	1.32E+01	2.88E+01	2.08E+02	0.00E+00	3.65E-02
CE-139	0.00E+00	0.00E+00	0.00E+00	0.00E+00	0.00E+00	0.00E+00	0.00E+00
HG-203	0.00E+00	0.00E+00	0.00E+00	0.00E+00	0.00E+00	0.00E+00	0.00E+00

Table 2 - 2

Site Related Teen Ingestion Dose Commitment Factors
(Freshwater Fish and Saltwater Invertebrate Consumption)

(AiT)
mR/hr per uCi/ml

ISOTOPE	BONE	LIVER	TOT BODY	THYROID	KIDNEY	LUNG	GI-LLI
H-3	0.00E+00	2.17E-01	2.17E-01	2.17E-01	2.17E-01	2.17E-01	2.17E-01
BE-7	3.58E-01	8.02E-01	4.01E-01	0.00E+00	8.50E-01	0.00E+00	9.76E+01
NA-24	4.20E+02	4.20E+02	4.20E+02	4.20E+02	4.20E+02	4.20E+02	4.20E+02
P-32	5.40E+07	3.35E+06	2.09E+06	0.00E+00	0.00E+00	0.00E+00	4.54E+06
CR-51	0.00E+00	0.00E+00	4.44E+00	2.47E+00	9.73E-01	6.34E+00	7.46E+02
MN-54	0.00E+00	5.33E+03	1.06E+03	0.00E+00	1.59E+03	0.00E+00	1.09E+04
MN-56	0.00E+00	1.43E+02	2.54E+01	0.00E+00	1.81E+02	0.00E+00	9.40E+03
FE-55	3.35E+04	2.37E+04	5.54E+03	0.00E+00	0.00E+00	1.51E+04	1.03E+04
FE-59	5.20E+04	1.21E+05	4.69E+04	0.00E+00	0.00E+00	3.83E+04	2.87E+05
CO-58	0.00E+00	5.10E+02	1.18E+03	0.00E+00	0.00E+00	0.00E+00	7.04E+03
CO-60	0.00E+00	1.48E+03	3.32E+03	0.00E+00	0.00E+00	0.00E+00	1.92E+04
NI-63	5.15E+04	3.64E+03	1.75E+03	0.00E+00	0.00E+00	0.00E+00	5.79E+02
NI-65	2.18E+02	2.79E+01	1.27E+01	0.00E+00	0.00E+00	0.00E+00	1.51E+03
CU-64	0.00E+00	9.53E+01	4.48E+01	0.00E+00	2.41E+02	0.00E+00	7.39E+03
ZN-65	1.46E+05	5.07E+05	2.36E+05	0.00E+00	3.24E+05	0.00E+00	2.15E+05
ZN-69	3.73E+02	7.10E+02	4.97E+01	0.00E+00	4.64E+02	0.00E+00	1.31E+03
BR-83	0.00E+00	0.00E+00	4.41E+01	0.00E+00	0.00E+00	0.00E+00	0.00E+00
BR-84	0.00E+00	0.00E+00	5.55E+01	0.00E+00	0.00E+00	0.00E+00	0.00E+00
BR-85	0.00E+00	0.00E+00	2.34E+00	0.00E+00	0.00E+00	0.00E+00	0.00E+00
RB-86	0.00E+00	1.09E+05	5.12E+04	0.00E+00	0.00E+00	0.00E+00	1.61E+04
RB-88	0.00E+00	3.12E+02	1.66E+02	0.00E+00	0.00E+00	0.00E+00	2.67E-05
RB-89	0.00E+00	2.01E+02	1.42E+02	0.00E+00	0.00E+00	0.00E+00	3.09E-07
SR-89	2.79E+04	0.00E+00	8.00E+02	0.00E+00	0.00E+00	0.00E+00	3.33E+03
SR-90	5.27E+05	0.00E+00	1.30E+05	0.00E+00	0.00E+00	0.00E+00	1.48E+04
SR-91	5.12E+02	0.00E+00	2.04E+01	0.00E+00	0.00E+00	0.00E+00	2.32E+03
SR-92	1.94E+02	0.00E+00	8.25E+00	0.00E+00	0.00E+00	0.00E+00	4.93E+03
Y-90	6.57E+00	0.00E+00	1.77E-01	0.00E+00	0.00E+00	0.00E+00	5.42E+04
Y-91M	6.18E-02	0.00E+00	2.36E-03	0.00E+00	0.00E+00	0.00E+00	2.92E+00
Y-91	9.64E+01	0.00E+00	2.58E+00	0.00E+00	0.00E+00	0.00E+00	3.95E+04
Y-92	5.80E-01	0.00E+00	1.68E-02	0.00E+00	0.00E+00	0.00E+00	1.59E+04
Y-93	1.84E+00	0.00E+00	5.03E-02	0.00E+00	0.00E+00	0.00E+00	5.61E+04
ZR-95	1.68E+00	5.29E-01	3.64E-01	0.00E+00	7.78E-01	0.00E+00	1.22E+03
ZR-97	9.65E-02	1.91E-02	8.80E-03	0.00E+00	2.90E-02	0.00E+00	5.17E+03
NB-95	4.86E+00	2.70E+00	1.48E+00	0.00E+00	2.61E+00	0.00E+00	1.15E+04
MO-99	0.00E+00	1.36E+02	2.60E+01	0.00E+00	3.12E+02	0.00E+00	2.44E+02
TC-99M	1.63E-02	4.55E-02	5.89E-01	0.00E+00	6.77E-01	2.52E-02	2.98E+01
TC-101	1.77E-02	2.51E-02	2.47E-01	0.00E+00	4.55E-01	1.53E-02	4.30E-09
RU-103	1.15E+02	0.00E+00	4.93E+01	0.00E+00	4.06E+02	0.00E+00	9.63E+03
RU-105	9.85E+00	0.00E+00	3.82E+00	0.00E+00	1.24E+02	0.00E+00	7.96E+03
RU-106	1.77E+03	0.00E+00	2.23E+02	0.00E+00	3.42E+03	0.00E+00	8.50E+04
AG-110M	2.94E+02	2.79E+02	1.69E+02	0.00E+00	5.31E+02	0.00E+00	7.82E+04
SB-122	4.35E+01	8.47E-01	1.27E+01	5.53E-01	0.00E+00	2.72E+01	9.13E+03
SB-124	5.09E+02	9.40E+00	1.99E+02	1.16E+00	0 00E+00	4.45E+02	1.03E+04
SB-125	3.27E+02	3.58E+00	7.64E+01	3.11E-01	0.00E+00	2.85E+02	2.53E+03

Table 2 - 2

Site Related Teen Ingestion Dose Commitment Factors
(Freshwater Fish and Saltwater Invertebrate Consumption)

(AiT)
mR/hr per uCi/ml

ISOTOPE	BONE	LIVER	TOT BODY	THYROID	KIDNEY	LUNG	GI-LLI
TE-125M	2.96E+03	1.07E+03	3.96E+02	8.28E+02	0.00E+00	0.00E+00	8.75E+03
TE-127M	7.48E+03	2.65E+03	8.90E+02	1.78E+03	3.03E+04	0.00E+00	1.87E+04
TE-127	1.22E+02	4.33E+01	2.63E+01	8.44E+01	4.95E+02	0.00E+00	9.44E+03
TE-129M	1.26E+04	4.68E+03	2.00E+03	4.07E+03	5.28E+04	0.00E+00	4.74E+04
TE-129	3.47E+01	1.29E+01	8.44E+00	2.48E+01	1.46E+02	0.00E+00	1.90E+02
TE-131M	1.89E+03	9.06E+02	7.55E+02	1.36E+03	9.44E+03	0.00E+00	7.27E+04
TE-131	2.16E+01	8.90E+00	6.75E+00	1.66E+01	9.44E+01	0.00E+00	1.77E+00
TE-132	2.70E+03	1.71E+03	1.61E+03	1.80E+03	1.64E+04	0.00E+00	5.42E+04
I-130	5.06E+01	1.46E+02	5.84E+01	1.19E+04	2.25E+02	0.00E+00	1.12E+02
I-131	2.87E+02	4.02E+02	2.16E+02	1.17E+05	6.92E+02	0.00E+00	7.95E+01
I-132	1.37E+01	3.58E+01	1.29E+01	1.21E+03	5.64E+01	0.00E+00	1.56E+01
I-133	9.87E+01	1.67E+02	5.11E+01	2.34E+04	2.94E+02	0.00E+00	1.27E+02
I-134	7.17E+00	1.90E+01	6.82E+00	3.17E+02	2.99E+01	0.00E+00	2.50E-01
I-135	2.99E+01	7.71E+01	2.86E+01	4.96E+03	1.22E+02	0.00E+00	8.54E+01
CS-134	4.24E+04	9.97E+04	4.63E+04	0.00E+00	3.17E+04	1.21E+04	1.24E+03
CS-136	4.35E+03	1.71E+04	1.15E+04	0.00E+00	9.32E+03	1.47E+03	1.38E+03
CS-137	5.67E+04	7.54E+04	2.63E+04	0.00E+00	2.57E+04	9.97E+03	1.07E+03
CS-138	3.93E+01	7.54E+01	3.77E+01	0.00E+00	5.57E+01	6.48E+00	3.42E-02
BA-139	7.05E+00	4.96E-03	2.05E-01	0.00E+00	4.67E-03	3.42E-03	6.28E+01
BA-140	1.44E+03	1.76E+00	9.28E+01	0.00E+00	5.98E-01	1.19E+00	2.22E+03
BA-141	3.40E+00	2.54E-03	1.14E-01	0.00E+00	2.36E-03	1.74E-03	7.25E-06
BA-142	1.52E+00	1.52E-03	9.33E-02	0.00E+00	1.28E-03	1.01E-03	4.65E-12
LA-140	1.67E+00	8.20E-01	2.18E-01	0.00E+00	0.00E+00	0.00E+00	4.71E+04
LA-142	8.58E-02	3.81E-02	9.49E-03	0.00E+00	0.00E+00	0.00E+00	1.16E+03
CE-141	3.49E+00	2.33E+00	2.67E-01	0.00E+00	1.10E+00	0.00E+00	6.66E+03
CE-143	6.16E-01	4.48E+02	5.01E-02	0.00E+00	2.01E-01	0.00E+00	1.35E+04
CE-144	1.82E+02	7.55E+01	9.80E+00	0.00E+00	4.51E+01	0.00E+00	4.59E+04
PR-143	6.28E+00	2.51E+00	3.13E-01	0.00E+00	1.46E+00	0.00E+00	2.07E+04
PR-144	2.06E-02	8.44E-03	1.05E-03	0.00E+00	4.84E-03	0.00E+00	2.27E-05
ND-147	4.50E+00	4.89E+00	2.93E-01	0.00E+00	2.87E+00	0.00E+00	1.76E+04
W-187	3.22E+02	2.62E+02	9.19E+01	0.00E+00	0.00E+00	0.00E+00	7.10E+04
NP-239	3.98E-02	3.75E-03	2.08E-03	0.00E+00	1.18E-02	0.00E+00	6.03E+02
K-40	0.00E+00	0.00E+00	0.00E+00	0.00E+00	0.00E+00	0.00E+00	0.00E+00
CO-57	0.00E+00	1.25E+02	2.10E+02	0.00E+00	0.00E+00	0.00E+00	2.33E+03
SR-85	0.00E+00	0.00E+00	0.00E+00	0.00E+00	0.00E+00	0.00E+00	0.00E+00
Y-88	0.00E+00	0.00E+00	0.00E+00	0.00E+00	0.00E+00	0.00E+00	0.00E+00
NB-94	0.00E+00	0.00E+00	0.00E+00	0.00E+00	0.00E+00	0.00E+00	0.00E+00
NB-97	4.36E-02	1.08E-02	3.95E-03	0.00E+00	1.27E-02	0.00E+00	2.58E+02
CD-109	0.00E+00	0.00E+00	0.00E+00	0.00E+00	0.00E+00	0.00E+00	0.00E+00
SN-113	0.00E+00	0.00E+00	0.00E+00	0.00E+00	0.00E+00	0.00E+00	0.00E+00
BA-133	0.00E+00	0.00E+00	0.00E+00	0.00E+00	0.00E+00	0.00E+00	0.00E+00
TE-134	3.46E+01	2.22E+01	2.32E+01	2.84E+01	2.12E+02	0.00E+00	1.28E+00
CE-139	0.00E+00	0.00E+00	0.00E+00	0.00E+00	0.00E+00	0.00E+00	0.00E+00
HG-203	0.00E+00	0.00E+00	0.00E+00	0.00E+00	0.00E+00	0.00E+00	0.00E+00

Table 2 - 3

Site Related Child Ingestion Dose Commitment Factors
(Freshwater Fish and Saltwater Invertebrate Consumption)

(AiT)
mR/hr per uCi/ml

ISOTOPE	BONE	LIVER	TOT BODY	THYROID	KIDNEY	LUNG	GI-LLI
H-3	0.00E+00	1.81E-01	1.81E-01	1.81E-01	1.81E-01	1.81E-01	1.81E-01
BE-7	4.77E-01	8.08E-01	5.33E-01	0.00E+00	7.96E-01	0.00E+00	4.52E+01
NA-24	4.57E+02	4.57E+02	4.57E+02	4.57E+02	4.57E+02	4.57E+02	4.57E+02
P-32	6.98E+07	3.27E+06	2.69E+06	0.00E+00	0.00E+00	0.00E+00	1.93E+06
CR-51	0.00E+00	0.00E+00	4.86E+00	2.70E+00	7.37E-01	4.92E+00	2.58E+02
MN-54	0.00E+00	4.20E+03	1.12E+03	0.00E+00	1.18E+03	0.00E+00	3.53E+03
MN-56	0.00E+00	1.31E+02	2.96E+01	0.00E+00	1.59E+02	0.00E+00	1.90E+04
FE-55	4.55E+04	2.42E+04	7.48E+03	0.00E+00	0.00E+00	1.37E+04	4.47E+03
FE-59	6.53E+04	1.06E+05	5.27E+04	0.00E+00	0.00E+00	3.07E+04	1.10E+05
CO-58	0.00E+00	4.20E+02	1.29E+03	0.00E+00	0.00E+00	0.00E+00	2.45E+03
CO-60	0.00E+00	1.23E+03	3.64E+03	0.00E+00	0.00E+00	0.00E+00	6.84E+03
NI-63	6.85E+04	3.67E+03	2.33E+03	0.00E+00	0.00E+00	0.00E+00	2.47E+02
NI-65	2.83E+02	2.66E+01	1.55E+01	0.00E+00	0.00E+00	0.00E+00	3.26E+03
CU-64	0.00E+00	9.05E+01	5.47E+01	0.00E+00	2.19E+02	0.00E+00	4.25E+03
ZN-65	1.55E+05	4.12E+05	2.56E+05	0.00E+00	2.59E+05	0.00E+00	7.23E+04
ZN-69	4.94E+02	7.14E+02	6.60E+01	0.00E+00	4.33E+02	0.00E+00	4.50E+04
BR-83	0.00E+00	0.00E+00	5.67E+01	0.00E+00	0.00E+00	0.00E+00	0.00E+00
BR-84	0.00E+00	0.00E+00	6.56E+01	0.00E+00	0.00E+00	0.00E+00	0.00E+00
BR-85	0.00E+00	0.00E+00	3.02E+00	0.00E+00	0.00E+00	0.00E+00	0.00E+00
RB-86	0.00E+00	1.06E+05	6.50E+04	0.00E+00	0.00E+00	0.00E+00	6.80E+03
RB-88	0.00E+00	3.00E+02	2.08E+02	0.00E+00	0.00E+00	0.00E+00	1.47E+01
RB-89	0.00E+00	1.85E+02	1.64E+02	0.00E+00	0.00E+00	0.00E+00	1.61E+00
SR-89	3.63E+04	0.00E+00	1.04E+03	0.00E+00	0.00E+00	0.00E+00	1.41E+03
SR-90	4.68E+05	0.00E+00	1.19E+05	0.00E+00	0.00E+00	0.00E+00	6.30E+03
SR-91	6.60E+02	0.00E+00	2.49E+01	0.00E+00	0.00E+00	0.00E+00	1.46E+03
SR-92	2.48E+02	0.00E+00	9.96E+00	0.00E+00	0.00E+00	0.00E+00	4.70E+03
Y-90	8.79E+00	0.00E+00	2.35E-01	0.00E+00	0.00E+00	0.00E+00	2.50E+04
Y-91M	[illegible]17E-02	0.00E+00	2.97E-03	0.00E+00	0.00E+00	0.00E+00	1.60E+02
Y-91	1.29E+02	0.00E+00	3.44E+00	0.00E+00	0.00E+00	0.00E+00	1.71E+04
Y-92	7.70E-01	0.00E+00	2.20E-02	0.00E+00	0.00E+00	0.00E+00	2.22E+04
Y-93	2.44E+00	0.00E+00	6.69E-02	0.00E+00	0.00E+00	0.00E+00	3.63E+04
ZR-95	2.10E+00	4.62E-01	4.11E-01	0.00E+00	6.62E-01	0.00E+00	4.82E+02
ZR-97	1.27E-01	1.83E-02	1.08E-02	0.00E+00	2.63E-02	0.00E+00	2.77E+03
NB-95	5.75E+00	2.24E+00	1.60E+00	0.00E+00	2.10E+00	0.00E+00	4.14E+03
MO-99	0.00E+00	1.31E+02	3.23E+01	0.00E+00	2.79E+02	0.00E+00	1.08E+02
TC-99M	1.99E-02	3.89E-02	6.46E-01	0.00E+00	5.66E-01	1.98E-02	2.22E+01
TC-101	2.30E-02	2.41E-02	3.06E-01	0.00E+00	4.11E-01	1.27E-02	7.66E-02
RU-103	1.48E+02	0.00E+00	5.67E+01	0.00E+00	3.72E+02	0.00E+00	3.82E+03
RU-105	1.30E+01	0.00E+00	4.73E+00	0.00E+00	1.15E+02	0.00E+00	8.50E+03
RU-106	2.36E+03	0.00E+00	2.95E+02	0.00E+00	3.19E+03	0.00E+00	3.68E+04
AG-110M	3.46E+02	2.34E+02	1.87E+02	0.00E+00	4.35E+02	0.00E+00	2.78E+04
SB-122	5.80E+01	8.56E-01	1.70E+01	7.43E-01	0.00E+00	2.36E+01	4.46E+03
SB-124	6.55E+02	8.50E+00	2.29E+02	1.44E+00	0.00E+00	3.63E+02	4.09E+03
SB-125	4.22E+02	3.25E+00	8.85E+01	3.91E-01	0.00E+00	2.35E+02	1.01E+03

Table 2 - 3

Site Related Child Ingestion Dose Commitment Factors
(Freshwater Fish and Saltwater Invertebrate Consumption)

(AiT)
mR/hr per uCi/ml

ISOTOPE	BONE	LIVER	TOT BODY	THYROID	KIDNEY	LUNG	GI-LLI
TE-125M	3.81E+03	1.03E+03	5.08E+02	1.07E+03	0.00E+00	0.00E+00	3.68E+03
TE-127M	9.67E+03	2.60E+03	1.15E+03	2.31E+03	2.76E+04	0.00E+00	7.83E+03
TE-127	1.58E+02	4.25E+01	3.38E+01	1.09E+02	4.48E+02	0.00E+00	6.15E+03
TE-129M	1.63E+04	4.55E+03	2.53E+03	5.25E+03	4.78E+04	0.00E+00	1.99E+04
TE-129	4.48E+01	1.25E+01	1.06E+01	3.20E+01	1.31E+02	0.00E+00	2.79E+03
TE-131M	2.41E+03	8.33E+02	8.86E+02	1.71E+03	8.06E+03	0.00E+00	3.38E+04
TE-131	2.78E+01	8.46E+00	8.26E+00	2.12E+01	8.40E+01	0.00E+00	1.46E+02
TE-132	3.38E+03	1.50E+03	1.81E+03	2.18E+03	1.39E+04	0.00E+00	1.51E+04
I-130	6.28E+01	1.27E+02	6.54E+01	1.40E+04	1.90E+02	0.00E+00	5.94E+01
I-131	3.70E+02	3.72E+02	2.12E+02	1.23E+05	6.11E+02	0.00E+00	3.31E+01
I-132	1.72E+01	3.16E+01	1.45E+01	1.47E+03	4.84E+01	0.00E+00	3.72E+01
I-133	1.27E+02	1.58E+02	5.96E+01	2.93E+04	2.63E+02	0.00E+00	6.35E+01
I-134	9.02E+00	1.67E+01	7.70E+00	3.85E+02	2.56E+01	0.00E+00	1.11E+01
I-135	3.77E+01	6.78E+01	3.21E+01	6.00E+03	1.04E+02	0.00E+00	5.16E+01
CS-134	5.15E+04	8.44E+04	1.78E+04	0.00E+00	2.62E+04	9.39E+03	4.55E+02
CS-136	5.17E+03	1.42E+04	9.19E+03	0.00E+00	7.56E+03	1.13E+03	4.99E+02
CS-137	7.19E+04	6.88E+04	1.02E+04	0.00E+00	2.24E+04	8.07E+03	4.31E+02
CS-138	5.01E+01	6.97E+01	4.42E+01	0.00E+00	4.90E+01	5.28E+00	3.21E+01
BA-139	9.34E+00	4.99E-03	2.71E-01	0.00E+00	4.35E-03	2.93E-03	5.39E+02
BA-140	1.87E+03	1.64E+00	1.09E+02	0.00E+00	5.35E-01	9.79E-01	9.50E+02
BA-141	4.51E+00	2.53E-03	1.47E-01	0.00E+00	2.19E-03	1.48E-02	2.57E+00
BA-142	1.97E+00	1.42E-03	1.10E-01	0.00E+00	1.15E-03	8.35E-04	2.57E-02
LA-140	2.16E+00	7.55E-01	2.54E-01	0.00E+00	0.00E+00	0.00E+00	2.10E+04
LA-142	1.12E-01	3.57E-02	1.12E-02	0.00E+00	0.00E+00	0.00E+00	7.08E+03
CE-141	4.65E+00	2.32E+00	3.45E-01	0.00E+00	1.02E+00	0.00E+00	2.90E+03
CE-143	8.19E-01	4.44E+02	6.44E-02	0.00E+00	1.86E-01	0.00E+00	6.51E+03
CE-144	2.14E+02	7.64E+01	1.30E+01	0.00E+00	4.23E+01	0.00E+00	1.99E+04
PR-143	8.40E+00	2.52E+00	4.17E-01	0.00E+00	1.37E+00	0.00E+00	9.06E+03
PR-144	2.76E-02	8.53E-03	1.39E-03	0.00E+00	4.51E-03	0.00E+00	1.84E+01
ND-147	5.96E+00	4.83E+00	3.74E-01	0.00E+00	2.65E+00	0.00E+00	7.65E+03
W-187	4.08E+02	2.42E+02	1.08E+02	0.00E+00	0.00E+00	0.00E+00	3.40E+04
NP-239	5.15E-02	3.70E-03	2.60E-03	0.00E+00	1.07E-02	0.00E+00	2.74E+02
K-40	0.00E+00	0.00E+00	0.00E+00	0.00E+00	0.00E+00	0.00E+00	0.00E+00
CO-57	0.00E+00	1.15E+02	2.33E+02	0.00E+00	0.00E+00	0.00E+00	9.43E+02
SR-85	0.00E+00	0.00E+00	0.00E+00	0.00E+00	0.00E+00	0.00E+00	0.00E+00
Y-88	0.00E+00	0.00E+00	0.00E+00	0.00E+00	0.00E+00	0.00E+00	0.00E+00
NB-94	0.00E+00	0.00E+00	0.00E+00	0.00E+00	0.00E+00	0.00E+00	0.00E+00
NB-97	5.55E-02	1.00E-02	4.68E-03	0.00E+00	1.11E-02	0.00E+00	3.09E+03
CD-109	0.00E+00	0.00E+00	0.00E+00	0.00E+00	0.00E+00	0.00E+00	0.00E+00
SN-113	0.00E+00	0.00E+00	0.00E+00	0.00E+00	0.00E+00	0.00E+00	0.00E+00
BA-133	0.00E+00	0.00E+00	0.00E+00	0.00E+00	0.00E+00	0.00E+00	0.00E+00
TE-134	4.31E+01	1.94E+01	2.59E+01	3.41E+01	1.80E+02	0.00E+00	1.97E+02
CE-139	0.00E+00	0.00E+00	0.00E+00	0.00E+00	0.00E+00	0.00E+00	0.00E+00
HG-203	0.00E+00	0.00E+00	0.00E+00	0.00E+00	0.00E+00	0.00E+00	0.00E+00

Table 2-4

Bio-Accumulation Factors for Liquid Effluent Isotopes
(pCi/kg per pCi/liter)

ISOTOPE	Freshwater Fish BFi	Saltwater Invertebrates BIi	ISOTOPE	Freshwater Fish BFi	Saltwater Invertebrates BIi
H-3	9.000E-01	9.300E-01	TE-125M	4.000E+02	1.000E+02
BE-7	2.000E+00	2.000E+02	TE-127M	4.000E+02	1.000E+02
NA-24	1.000E+02	1.900E-01	TE-127	4.000E+02	1.000E+02
P-32	1.000E+05	3.000E+04	TE-129M	4.000E+02	1.000E+02
CR-51	2.000E+02	2.000E+03	TE-129	4.000E+02	1.000E+02
MN-54	4.000E+02	4.000E+02	TE-131M	4.000E+02	1.000E+02
MN-56	4.000E+02	4.000E+02	TE-131	4.000E+02	1.000E+02
FE-55	1.000E+02	2.000E+04	TE-132	4.000E+02	1.000E+02
FE-59	1.000E+02	2.000E+04	I-130	1.500E+01	5.000E+01
CO-58	5.000E+01	1.000E+03	I-131	1.500E+01	5.000E+01
CO-60	5.000E+01	1.000E+03	I-132	1.500E+01	5.000E+01
NI-63	1.000E+02	2.500E+02	I-133	1.500E+01	5.000E+01
NI-65	1.000E+02	2.500E+02	I-134	1.500E+01	5.000E+01
CU-64	5.000E+01	1.700E+03	I-135	1.500E+01	5.000E+01
ZN-65	2.000E+03	5.000E+04	CS-134	2.240E+02	2.240E+02
ZN-69	2.000E+03	5.000E+04	CS-136	2.240E+02	2.240E+02
BR-83	4.200E+02	3.100E+00	CS-137	2.240E+02	2.240E+02
BR-84	4.200E+02	3.100E+00	CS-138	2.240E+02	2.240E+02
BR-85	4.200E+02	3.100E+00	BA-139	4.000E+00	1.000E+02
RB-86	2.000E+03	1.700E+01	BA-140	4.000E+00	1.000E+02
RB-88	2.000E+03	1.700E+01	BA-141	4.000E+00	1.000E+02
RB-89	2.000E+03	1.700E+01	BA-142	4.000E+00	1.000E+02
SR-89	3.000E+01	2.000E+01	LA-140	2.500E+01	1.000E+03
SR-90	3.000E+01	2.000E+01	LA-142	2.500E+01	1.000E+03
SR-91	3.000E+01	2.000E+01	CE-141	1.000E+00	6.000E+02
SR-92	3.000E+01	2.000E+01	CE-143	1.000E+00	6.000E+02
Y-90	2.500E+01	1.000E+03	CE-144	1.000E+00	6.000E+02
Y-91M	2.500E+01	1.000E+03	PR-143	2.500E+01	1.000E+03
Y-91	2.500E+01	1.000E+03	PR-144	2.500E+01	1.000E+03
Y-92	2.500E+01	1.000E+03	ND-147	2.500E+01	1.000E+03
Y-93	2.500E+01	1.000E+03	W-187	1.200E+03	3.000E+01
ZR-95	3.300E+00	8.000E+01	NP-239	1.000E+01	1.000E+01
ZR-97	3.300E+00	8.000E+01	K-40	0.000E+00	0.000E+00
NB-95	3.000E+02	1.000E+02	CO-57	5.000E+01	1.000E+03
MO-99	1.000E+01	1.000E+01	SR-85	0.000E+00	0.000E+00
TC-99M	1.500E+01	5.000E+01	Y-88	0.000E+00	0.000E+00
TC-101	1.500E+01	5.000E+01	NB-94	3.000E+02	1.000E+02
RU-103	1.000E+01	1.000E+03	NB-97	3.000E+02	1.000E+02
RU-105	1.000E+01	1.000E+03	CD-109	0.000E+00	0.000E+00
RU-106	1.000E+01	1.000E+03	SN-113	0.000E+00	0.000E+00
AG-110M	2.300E+00	3.300E+03	BA-133	0.000E+00	0.000E+00
SB-122	1.000E+00	3.000E+02	TE-134	4.000E+02	1.000E+02
SB-124	1.000E+00	3.000E+02	CE-139	0.000E+00	0.000E+00
SB-125	1.000E+00	3.000E+02	HG-203	0.000E+00	0.000E+00

Bio-Accumulation Factors and DFi's for Noble Gases = 0

Figure 2-1

Radioactive Liquid Waste Effluent System Flow Diagram

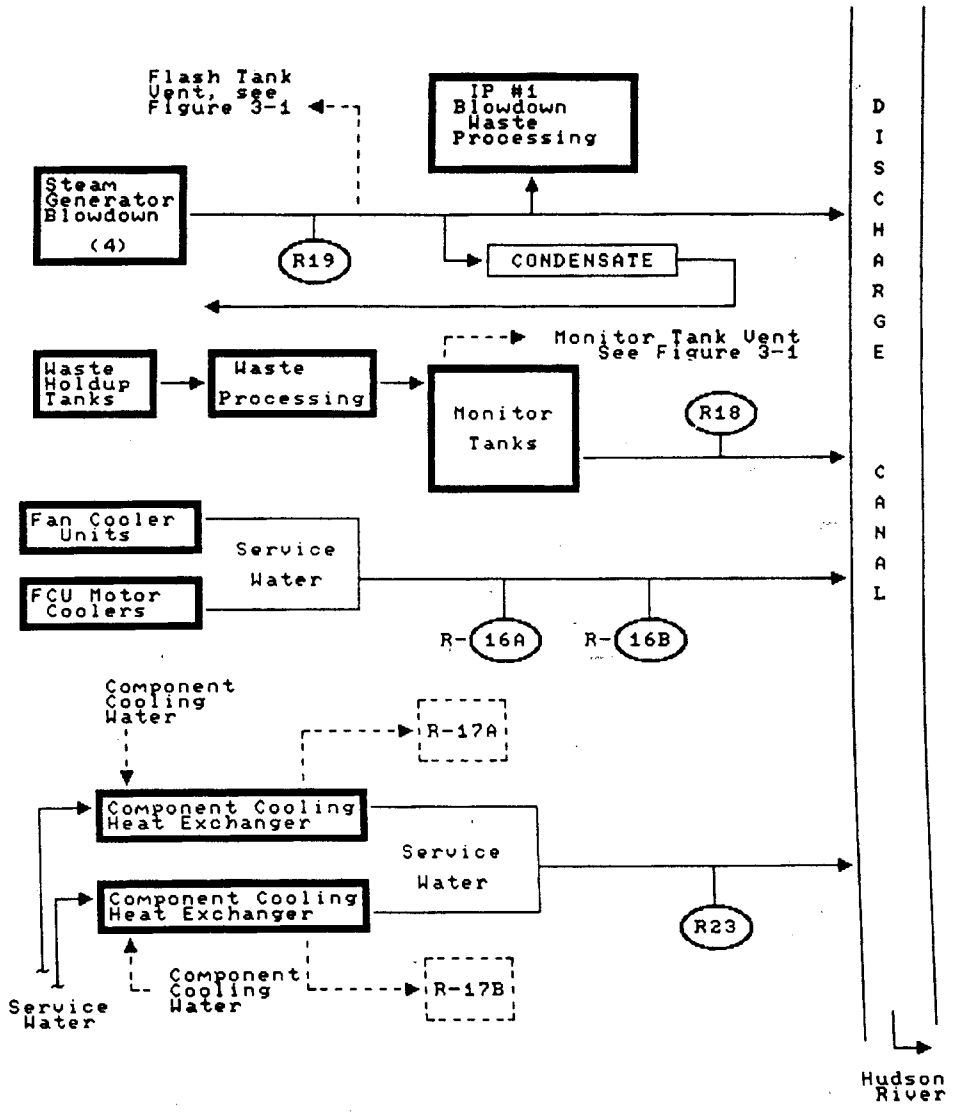

3.0 GASEOUS EFFLUENTS

3.1 Gaseous Effluent Releases - General Information

3.1.1 The surveillance and lower limit of detection requirements for gaseous radioactive effluents are contained in the Radiological Effluent Controls. Lower limits of detection calculations are addressed in Appendix B.

3.1.2 A completed and properly authorized Airborne Radioactive Waste Release Permit shall be issued prior to the release of airborne activity from the waste gas holding system and containment purge. If a containment purge exceeds 150 hours in duration then the purge will be considered a continuous, long term release for reporting purposes (See Section 3.1.16).

3.1.3 Since Indian Point is a two unit site, the derived instantaneous uCi/sec limits delineated in Section 3.2.1 are apportioned to each site. The time-average limits in 3.2.2, 3.2.3, and 3.2.4 are "per reactor" limits and the full dose limits are applicable to IP3.

3.1.4 During cold shutdown, there is no flowpath for a release from the Condenser Air Ejector, and the monthly grab sample described in Radiological Effluent Controls Table 3.4.1-1 is not required. During normal plant operation without a primary to secondary leak, almost all gaseous releases are through the main Plant Vent. A negligible amount may be identified in the Administration Building and Radioactive Machine Shop vents. In the event of extended operation with a primary to secondary leak, low level releases are expected from both the blowdown flash tank vent and condenser air ejector. However, the limits on steam generator leakage are much more restrictive than those for effluent releases. Allocation of portions of the allowable release rate to these various release points is not warranted. If the instantaneous release rate is used (taking advantage of the one hour averaging allowed by 3.3.1 or 3.4.1), then all release points will be considered when establishing the alarm setpoint per section 1.

3.1.5 For releases that are expected to continue for periods over two days, a new release permit will normally be issued each day. Containment purge release permits may be terminated at the discretion of the RES Manager and be considered as a continuous release until the purge is terminated. However, when plant conditions change that will cause the activity in containment to significantly change, a new permit shall be issued.

3.1.6 Assurance that the combined gaseous releases from Units 2 and 3 do not exceed Section 3.2.1 limits for the site is provided by administrative controls agreed to in the Memorandum of Understanding (#16) between Con Edison and the New York Power Authority concerning gaseous effluent discharge and the requirements of the document.

3.1.7 By mutual agreement with Con Edison's IP2NPP Shift Supervisor, one unit can reduce or eliminate discharges for a period of time to allow the other unit to use the full site permissible discharge rate, or a specific portion thereof, for discharge when necessary.

3.1.8 Conservative release rate limitations have been established to aid in controlling time average dose limits. The annual average limit shall normally be used for calculating limitations on discharge. If this limitation unduly restricts an individual release, the quarterly average release rate limit (μCi/sec) may be used for the release provided the quarterly time average dose limit will not be exceeded and the Operations Manager or Assistant Operations Manager is in agreement. The instantaneous limit for release may be used if the Site Executive Officer or his Designee is in agreement. The instantaneous limit should be checked by the Radiological and Environmental Services Department when applied.

When the instantaneous limit is applied, the release may be averaged over a one hour time interval.

3.1.9 Containment Pressure Reliefs

Containment pressure reliefs occur frequently enough to be considered continuous and are sampled from the plant vent release path. However, to ensure that the release rate will not be exceeded, the containment noble gas monitor (R-12) and the expected flowrate are used to calculate a release rate. The effluent noble gas monitor in the plant vent is used to verify these calculations (Ref: NUREG 0472, REV.3, DRAFT 6, TABLE 3.1-13).

3.1.10 Composite Particulate Samples

One of the following methods will be used to obtain a composite sample:

- Samples will be taken weekly and integrated monthly; or
- Samples will be taken weekly and counted together once per month (Ref: NUREG 0472, REV. 3, DRAFT 6, TABLE 4.11-12).

3.1.11 Gas Storage Tank Activity Limit

The noble gas activity limit of 50,000 Ci in the gas storage tanks was calculated using the equations from Section 5.6.1 of NUREG 0133 and the following parameters:

Ki = 294 mrem-m^3/μCi-yr, Xe-133 equivalent Table B-1 (Reg Guide 1.109)

X/Q = 1.03×10^{-3} s/m^3, Indian Point 3 FSAR

Qit must be calculated so that the dose is less than 500 mrem in a year:

$$Qit = \frac{(500\ \text{mrem})\ 3.15E7\ \text{s/yr}}{(1E6\mu\text{Ci/Ci})(294\text{mrem m}^3/\mu\text{Ci yr})(1.03E\text{-}3\text{s/m}^3)} = 52{,}011\ \text{Ci};\ \underline{50{,}000\ \text{Ci}}$$

This limit assumes 100% Xe-133 as per NUREG 133. Utilizing the Ki from an expected mixture during RCS degasification (Ki = 787 mrem-m^3/μCi-yr), the gas tank conservative administrative limit should be 19,400 curies.

The basis for assuring that accidental gas releases from liquid holdup tanks do not exceed Section 3.2.1 limits, is Technical Specifications Appendix A, 3.1.D (≤ 1 uCi/cc Dose Equivalent Iodine-131 in Reactor Coolant). Using the assumptions discussed in FSAR section 14.2.3, the potential total curies in the liquid holdup tanks is limited to less than the conservative limit for the Gas Storage Tanks (19,400 curies).

3.1.12 Gas Storage Tank Surveillance Requirements

There are two methods available to ensure that the activity in the gas storage tank is within the conservative administrative limit (19400 Ci).

$$\frac{1.94E{\cdot}4\ Ci \cdot 1E6\ uCi/Ci}{525\ ft^3 \cdot \left(\frac{164.7\ psia}{14.7\ psia}\right) \cdot 2.83E4\ cc/ft^3} \cdot 1.17E{\cdot}2\ uCi/cc$$

1. The total gaseous activity will normally be limited to less than 117 uCi/cc. If this concentration limit is exceeded, then the contents of the tank will be monitored and actions taken to ensure the 19,400 curie per tank limit is not exceeded.

2. The waste gas line monitor (R-20) reads in uCi/cc. It allows for control of waste gas tank curie content by limiting the input concentration to 117 uCi/cc, thereby limiting the curies to 19,400.

Large gas decay tanks on fill and CVCS tanks (which are indicative of the gas mixture in or from the reuse system) are continuously monitored for H_2 and O_2 through in-line instrumentation. With either in-line instrument out of service, a grab sample of the tank on receipt shall be taken daily, unless in degassing operation, when the periodicity is every four hours.

Other primary system tank cover gases can be manually directed through these instruments for individual samples.

3.1.13 The normal flow rate measurement for the Radioactive Machine Shop (RAMS) and the Plant Vent (PV) is obtained from the installed process monitor. When the instrument is out of service, the estimated flow from the RAMS is obtained by summing each operable exhaust fan's design flow rate. Estimated flow from the PV is obtained similarly, or from an alternate flow instrument (still considered an estimate). The design system flow rate of 12500 CFM is used for Administration Building ventilation. The process flow rate monitor surveillance requirements specified in RECS Table 3.2-1 are not applicable for the Administration Building, nor are they applicable when the RAMS or PV installed instruments are out of service and rated fan flow is used.

3.1.14 The activity released via the blowdown flash tank vent is determined by obtaining the steam generator blowdown Tritium, Noble Gas, and Iodine activity, and applying a partition factor (0.05) for the Iodine releases as listed in Regulatory Guide 1.42 "Interim Licensing Policy On As Low As Practicable for Gaseous Radioiodine Releases from Light Water Cooled Nuclear Power Reactors". (Ref:NUREG 0472, Rev3, DRAFT 6, TABLE 3.3-13).

3.1.15 Carbon 14 is released at a rate of 9.6 curies per GW(e).yr based upon studies performed by the New York State Department of Health at Indian Point 3. This is released in a gaseous form, the primary dose from which is in the CO_2 form. Therefore, these are exempt from the dose limits specified in Sections 2.4.1, 2.4.3 and 2.4.4 of the RECS. The Carbon 14 doses resulting from these releases are calculated in accordance with the methodology in Reg. Guide 1.109 and listed in the Radiological Impact on Man section of the Semi-annual Radioactive Effluent Release Report. This calculation is performed using the fraction of carbon 14 released in the CO_2 form (26%).

3.1.16 Evaluations of previous gas decay tank and containment purge releases have been performed. These evaluations indicate that these "Short Term Releases" (less than 500 hours per year and less than 150 hours per quarter) are sufficiently random to utilize the long term meteorological dispersion factor (NUREG 0133, Section 3.3, Page 8). The short term correction factor, will only be used when non-random releases are to be made, routinely.

3.1.17 The liquid waste monitor tanks have an airborne release pathway. The original plant design limited the gases through this pathway by reducing the entrained gases to less than 2E-3 uCi/ml. The removal of the CVCS gas stripper under modification 86-3-122 CVCS requires the quantification of these gases when the entrained gaseous activity in the monitor tank inlet exceeds 2E-3 uCi/ml. No action is required if the inlet noble gas concentration is less than 2E-3 uCi/ml.

This gas release will be quantified by calculating the difference (in uCi's) between the gaseous activity added to the tank and the gaseous activity present in the effluent release sample. This difference will be quantified as an airborne ground level batch release, using a X/Q of 5.0E-5 sec/m^3. A separate release permit evaluating this release is not required prior to release. Calculation of this rate of release is not required, however the time average dose contribution shall be calculated and controlled per Sections 3.3 and 3.4 of the ODCM. Section 3.6 provides additional detail relative to the finite cloud correction assumptions for this pathway.

3.1.18 Airborne releases from the Steam Generator Safety or Atmospheric Dump Valves can occur during a Primary to Secondary leak. Tritium, Noble Gas, and Iodine release rates are determined using a source term activity (Main Steam or Steam Generator Blowdown), an Iodine partition factor (0.05, as per Section 3.1.14), and a release rate, determined from Engineering Design Calculation 187 (Steam Generator Atmospherics), or design flowrate (from Steam Generator Safeties).

3.1.19 Releases from the steam driven auxiliary feed pump vent (and other abnormal release points) are calculated by obtaining the release rate (corrected for system pressure, as applicable) and source term activity (eg. Main Steam) for Tritium, Noble Gas, and Iodine, partitioned as per Section 3.1.14.

3.2 Gaseous Effluent Dose Calculation Requirements

3.2.1 Section 2.4.1 of the Radiological Effluent Controls requires that the dose rate due to radioactive materials released in gaseous effluents from the site at or beyond the site boundary shall be limited to:

a) For noble gases: Less than or equal to 500 mrem/yr to the total body and less than or equal to 3000 mrem/yr to the skin; and

b) For Iodine 131, Tritium, and for all radioactive materials in particulate form with half lives greater than 8 days: Less than or equal to 1500 mrem/yr to any organ.

The methodologies for performing these calculations are discussed in Sections 3.3.1 and 3.3.2, respectively.

3.2.2 Section 2.4.2 of the Radiological Effluent Controls requires that the air dose due to noble gases released in gaseous effluents from each reactor unit at or beyond the site boundary shall be limited to:

a) During any calendar quarter: Less than or equal to 5 mrad for gamma radiation and less than or equal to 10 mrad for beta radiation.

b) During any calendar year: Less than or equal to 10 mrad for gamma radiation and less than or equal to 20 mrad for beta radiation.

The methodology for calculating these doses is discussed in Section 3.3.3.

NOTE: If either of the above limits is exceeded by a factor of two or more, then cumulative dose contributions from direct radiation would be determined by evaluation of existing perimeter and environmental TLDs per Radiological Effluent Control 2.6.A.

3.2.3 Section 2.4.3 of the Radiological Effluent Controls requires that the dose to a member of the general public from Iodine 131, Tritium, and radionuclides in particulate form (half-lives > 8 days) in gaseous effluents released from each reactor unit shall be limited to:

a) Less than or equal to 7.5 mrem to any organ during a calendar quarter

b) Less than or equal to 15 mrem to any organ during a calendar year.

Cumulative dose contributions for the current calendar quarter and current calendar year shall be determined at least once every 31 days. The methodology for calculating these doses is discussed in Section 3.3.4.

NOTE: If either of the previous limits is exceeded by a factor of two or more, then cumulative dose contributions from direct radiation would be determined by evaluation of existing perimeter and environmental TLDs per Radiological Effluent Control 2.6.A.

3.2.4 Section 2.4.4 of the Radiological Effluent Controls requires that for each reactor unit, the appropriate portions of the gaseous radwaste treatment system shall be used to reduce radioactive effluents in gaseous waste prior to their discharge when projected gaseous effluent air dose at the site boundary when averaged over 31 days, would exceed 0.2 mrad for gamma radiation or 0.4 mrad for beta radiation. These doses are projected based on the dose methodology discussed in Section 3.3.3 (gas) and 3.3.4 (iodine) and the average previous months' doses are used to project future doses.

The appropriate portions of the ventilation exhaust treatment system shall be used to reduce radioactive materials in gaseous releases when the projected doses averaged over 31 days, would not exceed 0.3 mrem to any organ (at nearest residence).

Dose due to gaseous release from the site shall be calculated at least once every 31 days.

3.3 Dose Methodology (Computer Calculation)

3.3.1 Instantaneous Dose Rates - Noble Gas Releases

When the instantaneous limit applies, the process radiation monitor response or release rate can be averaged over a one-hour time interval.

3.3.1.1 The equations developed in this section are used to meet the calculational requirements of paragraph 3.2.1. The magnitude of this pathway is the same for all age groups so there is no critical group. Based on an agreement with Consolidated Edison, IP3NPP utilizes 50% of the site release limit as measured in Ci/sec which translates to 55.4% of the applicable dose rate limit for noble gas releases.

Each unit has different dispersion factors due to their relative positions to the critical sector of the unrestricted area boundary. The conversion from dose rate to Ci/sec was determined with the use of a model which incorporates a finite cloud exposure correction. The methodology is discussed in Section 3.6.

A calculation showing the relationship between Ci/sec. and dose rates from Units 2 and 3 is shown in Appendix 3-A. The equations for calculating the dose rate limitations are obtained from NUREG 0133 (Ref. 1, Section 5.2.1). Utilizing the above assumptions, these equations reduce to the following which are to be summed for each with nuclide. (Note Section 3.1.6 allows use of higher release rates up to the maximum of the allowable maximum permissible discharge rate.)

$$[(Ki)*(\overline{X/Q}) * (Qi)] = 275 \text{ mrem/yr whole body;}$$

$$[(Li+1.1\ Mi)* (\overline{X/Q}) \times (Qi)] = 1,766 \text{ mrem/yr to the skin;}$$

<u>Where</u>:

Ki = The total body dose factor due to gamma emissions for each identified noble gas radionuclide, in mrem/yr per $\mu Ci/m^3$ (finite cloud correction included).

Li = The skin dose factor due to gamma emissions for each identified noble gas radionuclide, in mrem/yr per $\mu Ci/m^3$ (finite cloud correction included).

Mi = The air dose factor due to gamma emissions for each identified noble gas radionuclide, in mrad/yr per $\mu Ci/m^3$ (finite cloud correction included).

Ni = The air dose factor due to beta emissions for each identified noble gas radionuclide, in mrad/yr per $\mu Ci/m^3$.

$\overline{Q}i$ = The release rate of radionuclides, i, an gaseous effluent for all release points in μCi/sec.

$\overline{(X/Q)}$ = For all vent releases, the highest calculated annual averaged relative concentration for any area at the unrestricted area boundary (4.85E-6 sec/m^3), in the SSW sector at 380 meters. (Note: SSW is critical IP3 sector for external gamma radiation exposure.)

The Ki, Li, Mi, and Ni factors were obtained from Table B-1 of Regulatory Guide 1.109 and are included in this document as Tables 3-4, 3-5, 3-6, and 3-7 respectively. The Ki and Mi factors have a finite cloud correction factor included.

3.3.1.2 These equations can also be expressed in the following manner:

$(\bar{K})\ (Qt)\ (\overline{X/Q})$ = mrem/yr (dose to whole body)

$(\bar{L} + 1.1\ \bar{M})\ (\overline{X/Q})\ (Qt)$ = mrem/yr dose to skin

NOTE: In the following formulas, the product of the release rate times the nuclide specific dose factor are summations over i.

Where:

Qt = The release rate of all noble gases summed together in ith μCi/sec, i.e., the sum of all Qi.

$\bar{K} = (1/Qt)\ (\bar{Q}i)\ (Ki)$

$\bar{L} = (1/Qt)\ (\bar{Q}i)\ (Li)$

$\bar{M} = (1/Qt)\ (\bar{Q}i)\ (Mi)$

$\bar{N} = (1/Qt)\ (\bar{Q}i)\ (Ni)$

NOTE: The summations are from i to n, i being the ith nuclide.

The values of $\bar{K}$, $\bar{L}$, $\bar{M}$, and $\bar{N}$ are listed in Table 3-8 for the unrestricted area boundary.

3.3.2 Instantaneous Dose Rates - I-131, Part w/>8 day t½, and H-3

The equation developed in this section is used to meet the calculational requirements of Paragraph 2.4.1. The critical organ is considered to be the child thyroid as stated in Section 4.0 of the Technical Specifications. Based on a previous agreement with Consolidated Edison, IP3NPP utilizes 50% of the site release limit as measured in Ci/sec which translates to 67.2% of the applicable dose rate limit. This is a result of the different dispersion to the critical sector of the unrestricted area boundary. A calculation showing the relationship between Ci/sec released and dose rates from Units 2 and 3 is shown in Appendix 3-A. The equation for calculating the dose rate limitation is obtained from NUREG 0133 (Ref. 1, Section 5.2.1, Pg. 25). Utilizing the above assumptions, this equation reduces to the following where the sum of:

$[(Pi) \times (X/Q) \times (Qi)]$ must be less than 1008 mrem/yr

Where:

Pi = The dose parameter for radionuclides other than noble gases for the inhalation pathway in mrem/yr per $\mu Ci/m^3$. These parameters (calculated in Section 3.3.2.1) are calculated separately for each isotope, age group, and organ.

Qi = The release rate of radionuclide 131 and particulates, i, in gaseous effluents for all release points in μCi/sec.

X/Q = 5.21E-6 sec/m³. The annual average dispersion parameter for the inhalation pathway at the controlling location (350 meters SW) due to all vent releases (see Section 3.5).

3.3.2.1 Calculation of Pi(in): Inhalation Dose Factor

Pi (inhalation) = K' (BR) DFAi (mrem/yr per μCi/m³)

Where:

K' = A constant of conversion, 10^6 pCi/μCi

BR = The breathing rate of each age group as per 3.3.4.5.a (Table E-5 of Reg. Guide 1.109).

DFAi = The inhalation dose factor for each age group, organ, and nuclide, in mrem/pCi. These values are taken from Reg Guide 1.109, Table E-7 through E-9 and are reproduced in Tables 3-1a through 3-1d.

3.3.3 Time Average Dose - Noble Gas Release

3.3.3.1 The equations in this section are used to meet the calculational requirements of Paragraphs 3.2.2 and 3.2.4. All releases at IP3NPP are assumed to be mixed mode unless indicated otherwise. The magnitude for this pathway is the same for all age groups so there is no critical group. Dispersion parameters are discussed in Section 3.5.

3.3.3.2 The equation for calculating the dose limitations are obtained from NUREG 0133 (Ref. 1, Section 5.3). The doses are evaluated at the unrestricted area boundary in the worst meteorological section (SSW sector at 380 meters). These equations reduce to the following (each equation is a summation over each ith radionuclide):

a. During any calendar quarter for gamma radiation:

(3.17×10^{-5}) Mi $[(X/Q)(Qi) + (x/q)(qi) + (x/q_{mt})(qi_{mt})]$, must be less than or equal to 5 mrad.

During any calendar quarter for beta radiation:

(3.17×10^{-8}) Ni $[(X/Q)(Qi) + (x/q)(qi) + (x/q_{mt})(qi_{mt})]$, must be less than or equal to 10 mrad.

b. During any calendar year:

(3.17×10^{-8}) Mi $[(X/Q)(Qi) + (x/q)(qi) + (x/q_{mt})(qi_{mt})]$, must be less than or equal to 10 mrad gamma.

(3.17×10^{-8}) Ni $[(X/Q)(Qi) + (x/q)(qi) + (x/q_{mt})(qi_{mt})]$, must be less than or equal to 20 mrad beta.

<u>Where</u>:

(X/Q) = The highest calculated annual average relative concentration for the unrestricted area boundary in the SSW sector at 380 meters for long term releases (greater than 500 hrs/yr or 150 hrs/qtr or as noted in 3.1.16) 4.85E-6 sec/m³.

(x/q) = The relative concentration for the unrestricted area boundary for short term releases (equal to or less than 500 hrs/yr or 150 hrs/qtr and not random as defined in NUREG 0133, Section 3.3). This value is calculated as per Section 3.5.

(x/q_{mt}) = The relative concentration for the unrestricted area boundary for ground level releases from the monitor tank vents in the SW sector at 350 meters, 5E-5 sec/m³.

Mi = The air dose factor due to gamma emission for each identified noble gas radionuclide in mrad/yr per μCi/m³.

Ni = The air dose factor due to beta emissions for each identified noble gas radionuclide in mrad/yr per μCi/m³.

qi_{mt} = The total releases of noble gas radionuclides in monitor tank vents in uCi. Releases shall be cumulative over the calendar quarter or years as appropriate.

qi = The total release of noble gas radionuclides in gaseous effluents, i, for short term releases (equal to or less than 500 hrs/yr or 150 hrs/qtr and not random as defined in NUREG 0133, Section 3.3) from all vents, in μCi. Releases shall be cumulative over the calendar quarter or year as appropriate.

Qi = The total release of noble gas radionuclides in gaseous effluents, i, for long term releases (greater than 500 hrs/yr or 150 hrs/qtr or as noted in 3.1.16) from all vents in μCi. Releases shall be cumulative over the calendar quarter or year as appropriate.

3.17×10^{-8} = The inverse of the number of seconds in a year.

The air dose factors Mi and Ni were obtained from Table B-1 of Regulatory Guide 1.109 and are listed in Table 3-6 and 3-7 respectively. The M air dose factors are finite cloud corrected.

3.3.4 Time Averaged Dose - Radioiodine 131, Part w/t½ >8 days, and Tritium

3.3.4.1 The equations in this section are used to meet the calculational requirements of Paragraphs 3.2.3 and 3.2.4.

3.3.4.2 The pathways considered in this analysis are inhalation, ground plane, vegetable ingestion, and milk ingestion. The meat ingestion pathway is not considered because of the high degree of commercial, industrial, and residential land usage in the area and the fact that this pathway was not indicated within ten miles of the plant. The inhalation, ground plane, and vegetation ingestion pathways only are assumed to exist at the nearest residence in the worst meteorological sector which is the SSW sector at 1526 meters. Since no real cow exists within 5 miles in the worst downwind sectors, all four (4) pathways will be considered at this secondary receptor.

3.3.4.3 The equations for calculating the dose limitations are obtained from NUREG 0133 (Ref. 1, Section 5.3). These equations reduce to the following (the equations are a summation over each ith radionuclide):

During any calendar quarter:

$(3.17 \times 10^{-8})[Ri(W\ Qi + wqi)]$ must be less than 7.5 mrem

During any calendar year:

$(3.17 \times 10^{-8})[Ri(W\ Qi + wqi)]$ must be less than 15 mrem.

Where:

Qi = The plant releases of radioiodine 131 and radioactive materials in particulate form with half-lives greater than 8 days for long term releases as defined in Section 3.1.16, in μCi. Releases shall be cumulative over the calendar quarter or year as appropriate.

qi = The plant releases of radioiodine 131 and radioactive materials in particulate form with half-lives greater than 8 days for short term releases as defined in Section 3.1.16, in μCi. Releases shall be cumulative over the calendar quarter or year as appropriate.

W = The dispersion or deposition parameter (based on meteorological data defined in Section 3.5) for estimating the dose to an individual at the controlling location for long term releases as defined in Section 3.1.16.

Wn(in) = The highest calculated annual average dispersion parameter for the inhalation pathway for the nearest residence in the unrestricted area located in the SSW sector at 1526 meters, 8.96E-7 sec/m^3.

Wn(dep) = The highest calculated annual average deposition parameter for the nearest residence in the unrestricted area located in the South sector at 1279 meters, 6.14E-9 m^{-2}.

Ws(in) = The calculated annual average dispersion parameter for the inhalation pathway for the secondary receptor located in the highest downwind sectors at 5 miles, 7.22E-7 sec/m^3.

Ws(dep) = The highest calculated annual average deposition parameter for the secondary receptor located in the highest downwind sectors at 5 miles, 1.35E-9 m^{-2}.

w = The vent dispersion or deposition parameter for estimating the dose to an individual at the controlling location for short term releases (as defined in Section 3.1.16) and calculated as in Section 3.5.

3.17×10^{-8} = The inverse number of seconds in a year.

Ri = The dose factor for each identified pathway, organ, and radionuclide, i, in m^2 - mrem/yr per μCi/sec. or mrem/yr per μCi/m^3. These dose factors are determined as described in Sections 3.3.4.5a-d.

3.3.4.4 Utilizing the assumptions contained in Section 3.3.4.3, these equations for the nearest resident and the secondary receptor, respectively, reduce to the following (each equation is a summation over each ith radionuclide):

DN =(3.17E-8) * [Ri(I) * [Wn(in)Qi + wn(in)qi]+

(Ri(G) + Ri(V)) * [Wn(dep)Qi + wn(dep)qi]]

DS =(3.17E-8) * [Ri(I) * [Ws(in)Qi + ws(in)qi]+

(Ri(G) + Ri(c) + Ri(V)) * [Ws(dep)Qi + ws(dep)qi]]

less than or equal to 7.5 mrem Quarterly

less than or equal to 15 mrem Annual

Where DN and DS is the total dose at the nearest residence and secondary receptor, respectively.

NOTE: The subscript s refers to the secondary receptor and the subscript n refers to the nearest residence.

Ri(I): Inhalation pathway factor for each ith radionuclide.

Ri(G): Ground plane pathway factor for each ith radionuclide.

Ri(V): Vegetation pathway factor for each ith radionuclide.

Ri(C): Cow milk pathway factor for each ith radionuclide.

3.3.4.5.a Calculation of Dose Factors

Calculation of Ri(I)(X/Q)Inhalation Pathway Factor

Ri(I) (X/Q) = K'[(BR)a][(DFAi)a](mrem/yr per μCi/m^3)

Where:

K' = Constant of unit conversion, 10^6 pCi/μCi

(BR)a = Breathing rate of the receptor of age group (a) in m^3/yr.

(DFAi)a = The maximum organ inhalation dose factor for the receptor of age group (a) for the ith radionuclide in mrem/pCi. The total body is considered as an organ in the selection of (DFAi)a.

. Child and infant inhalation dose factors are generally more restrictive, however, doses from each age group are calculated separately. The (DFAi)a values are listed in Tables 3-1a through 3-1d. The Ri values for the inhalation pathway are listed in Table 3-10a through 3-10d.

Breathing rates: (from Regulatory Guide 1.109, Table E-5)

Infant = 1400 (m^3/yr)

Child = 3700 (m^3/yr)

Adult/Teen= 8000 (m^3/yr)

3.3.4.5.b Calculation of Ri(G)(D/Q) Ground Plane Pathway Factor

$$Ri(G)\ D/Q = \frac{K'K''(SF)(DFGi)(1 - e^{(-kit)})}{Ki} \quad \frac{m^2 \cdot mrem/yr}{uCi/sec}$$

Where:

K' = A constant of conversion, 10^6 pCi/μCi.

K" = A constant of conversion, 8760 hr/yr.

ki = Decay constant for the ith radionuclide sec^{-1}.

t = The exposure time, 4.73 x 10^8 sec (15 years).

DFGi = The ground plane dose conversion factor for ith radionuclide (mrem/hr per pCi/m^2).

SF = Shielding factor (dimensionless) = 0.7 (from Table E-15 of Regulatory Guide 1.109).

The values of DFGi were obtained from Table E-6 of Regulatory Guide 1.109 and are listed in Table 3-2. These values were used to calculate Ri(G), which is the same for all age groups and organs and is listed in Table 3-13.

3.3.4.5.c Calculation of Ri(c)(D/Q) - Grass-Cow-Milk Pathway Factor

Ri(c)(D/Q) =

$$\frac{K(QF)(Uap)(Fm)(r)(DFLi)a}{ki+kw} \cdot \left(\left[\frac{fpfs}{Yp} + \frac{1-fpfs}{Ys} \right] \cdot e^{(-kith)} \right) \cdot e^{(-kitf)}$$

Where:

K' = Constant of conversion, 10^6 pCi/μCi

QF = Cow's consumption rate in kg/day (wet weight)

Uap= Receptor's milk consumption rate for age (a) in liters/yr.

Yp = Agricultural productivity by unit area of pasture grass in kg/m^2.

Ys = Agricultural productivity by unit area of stored feed in kg/m^2.

Fm = Stable element transfer coefficients in days/liters, Table 2-2.

r = Fraction of deposited activity retained on cow's feed grass.

(DFLi)a= The maximum organ ingestion dose for the ith radionuclides for the receptor in age group (a) in mrem/pCi. Values are from Tables E-11 through E-14 of Regulatory Guide 1.109 and are listed in Tables 3-3a through 3-3d.

ki = Decay constant for the radio-nuclide in sec^{-1}.

kw = Decay constant for removal of activity on leaf and plant surfaces by weathering, 5.73E-7 sec^{-1} (corresponding to a 14 day half-life).

tf = The transport time from pasture, to cow, to milk, to receptor in sec.

th = The transport time from pasture, to harvest, to cow, to milk, to receptor, in sec.

fp = Fraction of the year that the cow is on pasture.

fs = Fraction of the cow feed that is pasture grass while the cow is on pasture.

Note: The values of Ri(c) are listed in Table 3-12.

The concentration of Tritium in milk is based on the airborne concentration rather than the deposition. Therefore, the Ri(c) is based on X/Q:

$$Ri(c)(X/Q) = K'K''(Fm)(QF)(Uap)(DFLi)a\ 0.75(0.5/H) \quad (mrem/yr\ per\ \mu Ci/m^3)$$

<u>Where</u>:

K" = A constant of unit conversion, 10^3 m/kg;

H = Absolute humidity of the atmosphere in gm/m^3;

0.75 = The fraction of total feed that is water;

0.5 = The ratio of the specific activity of the feed grass water to the atmospheric water;

Other parameters and values are given above. The value of H may be considered as 8 grams/meter³ (NUREG 0133, PAGE 27) in lieu of site specific information.

Ri(c) Parameters Are Taken From The Following Sources:

Parameter		Value	Table R.G. 1.109
r (dimensionless)		1.0 for radioiodine 0.2 for particulates	E-15 E-15
Fm (days/liter)		Each stable element	E-1
Uap (liters/yr)	- infant	330	E-5
	- child	330	E-5
	- teen	400	E-5
	- adult	310	E-5
(DFLi)a(mrem/pCi)		Each radionuclide	E-11 to E-14
Yp(kg/m²)		0.7	E-15
Ys(kg/m²)		2.0	E-15
tf (seconds)		1.73E5 (2 days)	E-15
th (seconds)		7.78E6 (90 days)	E-15
Qf (kg/day)		50	E-15
fs		Assumed to be unity	
fp		Assumed to be unity	

Stable Element Transfer data is listed in Table 3-2 (Regulatory Guide 1.109, Table E-1). The (DFLi)a values for 4 age groups are given in Tables 3-3a through 3-3d.

3.3.4.5d Calculation of Ri(V)(D/Q) - Vegetation Pathway Factor

$$Ri(V)(D/Q) = \frac{K'(r)}{Yv(ki + kw)} \cdot (DFLi)a \cdot [(UaL)fL \cdot e^{(-kitch)} + (UaS)fg \cdot e^{(-kitch)}]$$

Where:

K' = Constant of conversion, 10^6pCi/μCi

UaL = Consumption rate of fresh leafy vegetation by the receptor in age group (a) in kg/yr.

UaS = Consumption rate of non-leafy vegetables by the receptor in age group (a) in kg/yr.

fL = The fraction of the annual intake of leafy vegetation grown locally.

fg = The fraction of the annual intake of non-leafy vegetation grown locally.

tL = The average time between harvest of leafy vegetation and its consumption in seconds.

th = The average time between harvest of stored vegetation and its consumption in seconds.

Yv = The vegetation area density in kg/m².

All other factors are defined in the Calculation of Grass-Cow-Milk Pathway Factor Section 3.3.4.5.c of this manual.

The concentration of Tritium in vegetation is based on the airborne concentration rather than the deposition. Therefore, the Ri(V) is based on X/Q:

$$(RiV)(X/Q) = K'K''[(UaL)fL + (UaS)fg](DFLi)a\ (0.75)(0.5/H) \quad \text{(mrem/yr per } \mu\text{Ci/m}^3\text{)}$$

Where all terms are defined in this section or in the grass-cow-milk pathway calculation section of this manual. (DFLi)a for each age group is given in Tables 3-3a through 3-3d. Ri(V) values are listed in Table 3-11a through 3-11d.

Ri(V) Parameters Are From The Following Sources:

Parameter			Value	Table R.G. 1.109
r (dimensionless)			1.0 for radioiodines 0.2 for particulates	E-15
(DFLi)a (mrem/pCi)			Each radionuclide	E-11 to E-14
UaL (kg/yr)	-	infant	0	E-5
	-	child	26	E-5
	-	teen	42	E-5
	-	adult	64	E-5
UaS (kg/yr)	-	infant	0	E-5
	-	child	520	E-5
	-	teen	630	E-5
	-	adult	520	E-5
fL (dimensionless)			1.0	E-15
fg (dimensionless)			0.76	E-15
tL (seconds)			8.6E4 (1 day)	E-15
th (seconds)			5.18E6 (60 days)	E-15
Yv (kg/m²)			2.0	E-15

3.4 Backup Simplified Dose Methodology

The dose calculation procedures described in this section are provided for use as a backup whenever the primary computer methodology cannot be followed.

3.4.1 Instantaneous Dose Rates - Noble Gas Releases

When the instantaneous limit applies, the process radiation monitor response or release rate can be averaged over a one-hour time interval.

3.4.1.1 This section describes the alternative calculational methods to meet the requirements of Paragraph 3.2.1. These methods provide calculational results as per section 3.3.1.

3.4.1.2 To determine an acceptable noble gas instantaneous release rate in uCi/sec, a standard isotopic mixture of noble gases may be assumed. This isotopic mixture was measured for a mixture of isotopes typical of reactor coolant with exposed fuel. This requirement is evaluated at the worst sector of the unrestricted area boundary. Based on this isotopic mixture, standard Ks, Ls, Ms, and Ns (lower case s denotes a weighted sum, see Table 3-8) can be determined using the technique presented in paragraph 3.3.1.2 and Ki, Li, Mi, and Ni values from Tables 3.4-7. The data and results of this calculation are shown in Table 3-8.

3.4.1.3 The isotopic mixture chosen was obtained from a reactor coolant sample during an operating period with exposed fuel. Table 3-8 contains the mixture data and the fractional relative abundance of each isotope. These standard factors can be used with the equations and limits presented in Section 3.3.1.

3.4.1.4 Utilizing the equations from Paragraph 3.4.1.3 and the values from Table 3-8, maximum release limits for all noble gases in μCi/sec can be calculated as follows:

Maximum instantaneous release rates:

$$Qt = \frac{275}{Ks(X/Q)} = \frac{275}{(1.49E+3)(4.85E-6)} = 3.81\ E+4\ \frac{\mu Ci}{sec}\ \text{(Whole Body)}$$

$$Qt = \frac{1766}{(Ls + 1.1\ Ms)(X/Q)} = \frac{1766}{3.16E+3(4.85E-6)} = 1.15E+5\ \frac{\mu Ci}{sec}\ \text{(Skin)}$$

3.4.1.5 For individual release rate determinations, alternate computer codes and/or a Hand Calculation Template serve as back up methodologies should the primary computer method be inoperable. These methods comply with calculations in Section 3.3.1.

3.4.2 Instantaneous Dose Rates-I-131, Particulates w/t½>8 days, & H-3

3.4.2.1 This section describes the alternative calculational method to meet the requirements of Paragraph 3.2.1. The purposes of this method is to provide backup calculational techniques, both computer aided and hand calculated, which approximate section 3.3.2.

3.4.2.2 To determine an acceptable iodine and particulate release rate, it is assumed that the limit on these releases shall be met if the total noble gas concentration in the VC is at least a factor of 20,000 more than the concentration of radioiodine and long lived particulates or VC iodines and long lived particulates are less than 1E-7 μCi/cc. This has historically been the case and this assures that the noble gas activity will be limiting.

3.4.2.3 Backup instantaneous dose rate calculations can be performed with an alternate computer code or by formatted hand calculations. These methods are identical to section 3.3.2.

3.4.3 Time Averaged Dose - Noble Gas Releases

3.4.3.1 This section describes alternative methods of meeting the requirements of Paragraphs 3.2.2 and 3.2.4, and the alternative methods of implementing the calculation techniques presented in Section 3.3.3.

3.4.3.2 The values of $\overline{Ki}$, $\overline{Li}$, $\overline{Mi}$, and $\overline{Ni}$ for the Plant Vent (PV) mixed mode releases and the Monitor Tank (MT) ground plane releases are determined for each release using the dispersion parameter for the site boundary in the worst sector. The calculations are as follows:

$$PV\ \overline{Ki} = (Ki)*(X/Q)PV \quad \text{and} \quad MT\ Ki = (\overline{Ki})*(X/Q)MT$$

$$PV\ \overline{Li} = (Li)*(X/Q)PV \quad \text{and} \quad MT\ Li = (\overline{Li})*(X/Q)MT$$

$$PV\ \overline{Mi} = (Mi)*(X/Q)PV \quad \text{and} \quad MT\ Mi = (\overline{Mi})*(X/Q)MT$$

$$PV\ \overline{Ni} = (Ni)*(X/Q)PV \quad \text{and} \quad MT\ Ni = (\overline{Ni})*(X/Q)MT$$

Where:

Ki = The total body dose factor due to gamma emissions for each identified noble gas radionuclide in mrem/yr per μCi/m^3 (finite cloud correction used).

Li = The skin dose factor due to gamma emissions for each identified noble gas radionuclide in mrem/yr per μCi/m^3.

Mi = The air dose factor due to gamma emissions for each identified noble gas radionuclide in mrem/yr per $\mu Ci/m^3$ (finite cloud correction used).

Ni = The air dose factor due to beta emissions for each identified noble gas radio- nuclide in mrad/yr per $\mu Ci/m^3$.

(X/Q)PV = The highest calculated annual average dispersion parameter for the noble gas pathway at the unrestricted area boundary, 4.85E-6 sec/m^3 and applicable to plant vent mixed mode releases.

(X/Q)MT = The highest calculated annual average X/Q for ground level monitor tank noble gas release pathway, 5.00E-5 sec/m^3.

3.4.3.3 Determine weighted average dose factors as follows:

All values of $\bar{K}i$, $\bar{L}i$, $\bar{M}i$, and $\bar{N}i$ are shown in Table 3-4 through 3-7 for the unrestricted area boundary.

Each of the following expressions is summed over all the nuclides:

$$PV\ Kt = \sum[\bar{K}i * (Ci/Ct)]$$

$$PV\ Lt = \sum[\bar{L}i * (Ci/Ct)]$$

$$PV\ Mt = \sum[\bar{M}i * (Ci/Ct)]$$

$$PV\ Nt = \sum[\bar{N}i * (Ci/Ct)]$$

For the monitor tank pathway MT Kt, MT Lt, MT Mt, and MT Nt are calculated in the same way as for plant vent (PV) releases above, except that Ci and Ct apply to gaseous activity for the monitor tank pathway.

<u>Where</u>:

Ci = Concentration of isotope i ($\mu Ci/cc$) in analysis, t (for either PV or MT pathway)

Ct = Concentration of all noble gas isotopes ($\mu Ci/cc$) for a specific analysis, (for either the PV or MT pathway)

These calculations can be performed by hand (via formatted procedure) or by using alternate computer codes to compute all or part of the entire dose calculation.

3.4.3.4 Calculate resultant doses and compare with limits as per 3.3.3. The sum of all releases in a calendar quarter or calendar year should be compared to the limits of Section 3.2.2 and 3.2.4 as appropriate for gamma air dose and beta air dose.

3.4.4 Time Averaged Dose-Iodine 131 and Particulates w/t½>8 days& H-3

3.4.4.1 This section describes the alternate methods of meeting the requirements of Paragraphs 3.2.3 and 3.2.4 and of implementing the calculational techniques presented in Section 3.3.4.

3.4.4.2 If the primary computer method is inoperable, dose calculations can be performed by:

a) an alternate computer code which complies with Section 3.3.4, using all identified Iodine and Particulate isotop

- or -

b) hand calculations (via a formalized departmental procedure) which comply with Section 3.3.4.

3.4.4.3 Sum the Iodine, Particulate, and Tritium dose contributions and compare quarterly and annual totals to the limits described in Section 3.2.3.

3.5 Calculation of Meteorological Dispersion Factors

3.5.1 For the purpose of these calculations, the site boundary was taken to be the unrestricted area boundary. The distances to the site boundary, as measured from the plant vent on top of the IP3NPP primary containment, are shown in Table 3-11 for each of the 16 major compass sectors. The distances to the nearest residence in each of these sectors is also shown on this table. In the sectors where the Hudson River is the site boundary, the opposite shore is assumed as the boundary of the unrestricted area. This is based on the definition of unrestricted area in NUREG 0133 (Ref. 1, Section 2.2, Page 6) which states that the unrestricted area boundary does not include areas over bodies of water. The nearest opposite shore distance is five times that of the closest land restricted area boundary. Therefore, these locations are unimportant when evaluating the maximum unrestricted area boundary concentrations.

3.5.2 The atmospheric transport and diffusion model used in the evaluation of dispersion and deposition factors is the sector-average straight-line model in Regulatory Guide 1.111 (Ref. 15) for mixed-mode releases with plume-rise effects, downwash, and building-wake correction. The analyses were carried out using the AEOLUS-3 computer code (Ref. 16) and are documented in detail in Ref. 17. Use was made of 10-years' worth of hourly meteorological data collected on site during the period 1981 through 1990 in accordance with the accuracy requirements of Regulatory Guide 1.23 (Ref. 18); the data recovery index for that period was in excess of 99%. Comparison of the new meteorological data with previous data shows no difference in the overall dispersion conditions at the site. In the analyses, wind-speed coefficients in Regulatory Guide 1.111 were used to extrapolate the measured wind speeds to the height of the main vent (on top of the primary containment). Also, the regulatory plume entrainment model was used to determine plume partitioning between ground-level and elevated releases, and no credit was taken for decay and depletion in transit. Recirculation effects were accounted for by confining in-valley flows within the valley out to a distance of 10 miles (up or down the valley) and allowing a portion of them to return to the site without additional dilution.

3.5.3 To meet the calculational requirements of Paragraphs 3.2.1, 3.2.2, and 3.2.4 the annual average dispersion factors were calculated for each compass sector at the site unrestricted area boundary. The most restrictive X/Q was determined to be 5.2E-06 s/m³ in the SW sector at 350 meters for inhalation and the SSW sector at 380 meters with an X/Q of 4.85E-6 s/m³ for external gamma radiation. The distances to the site boundary in each sector are listed in Table 3-9.

For the monitor tank release pathway, ground level X/Q values were assessed using the same data base as discussed in Section 3.5.2. The most restrictive X/Q was determined to be in the SW sector at 350m with a value of 5.00E-5 sec/m³ (concentration X/Q per Ref. 21).

3.5 4 To meet the calculational requirements of Paragraph 3.2.3 iodines and particulates, the annual average deposition and dispersion parameters were calculated for the nearest residence in each of the compass sectors. Distance to the nearest residence in each sector are listed in Table 3-11. Because no real dairy exists within 5 miles of the power plant, a hypothetical cow was placed in the worst meteorological sector at 5 miles. Dispersion and deposition parameters for both locations were calculated using the models and data described in Sec. 3.5.2 above and are as follows:

Wn(in) = The highest calculated annual average dispersion parameters for the inhalation pathway for the nearest residence in the unrestricted area located in the SSW sector at 1526 meters, 8.96E-7 sec/m³.

Wn(dep) = The highest calculated annual average deposition parameters for the ground plane and vegetation pathways for the nearest residence in the unrestricted area located in the S sector at 1279 meters, 6.14E-9 m^{-2}. For Tritium in the vegetation pathway Wn(in) is used.

Ws(in) = The calculated annual average dispersion factor for the inhalation pathway for the secondary receptor occurs in the downwind sectors at 5 miles, 7.22E-7 sec/m^3.

Ws(dep) = The highest calculated annual average deposition factor for the cow-milk vegetation, and ground plane pathways for the secondary receptor occurs in the downwind sectors at 5 miles, 1.35E-9 m^{-2}. For Tritium in the cow-milk and vegetation pathways Ws(in) is used.

NOTE: For the monitor tank pathway, iodines and particulates are effectively removed by demineralization, therefore dispersion parameters are not needed for nearest residence or at 5 miles.

3.5.5 To meet the calculational requirements of Paragraphs 3.2.2, 3.2.3 and 3.2.4 and the calculation methodologies described in Sections 3.3.4 and 3.3.3 short term release dispersion and deposition factors may need to be calculated. For this document short term release dispersion and deposition factors are determined from the long term annual average parameters. The method utilized is that presented by Sagendorf in NUREG 0324 (Ref. 5) as recommended by NUREG 0133 (Ref. 5, Section 3.3, Page 8), and makes use of a factor (F) developed for a particular compass sector and distance which is simply multiplied by the annual average dispersion or deposition parameter for the same sector and distance to develop the corresponding short-term parameter. This factor is defined as:

$$F = [NTOTAL/8760]^m$$

Where:

F = The non-dimensional correction factor used to convert annual average dispersion or deposition factors to short term dispersion or deposition factors.

NTOTAL = The total duration of a short-term release (or releases) in hours, during a chosen reporting period.

8760 = The total number of hours in a year.

ANMX = The calculated annual average dispersion (sec/m^3) or deposition (m^{-2}) factor for the compass sector and distance of interest.

F15MX = The short term dispersion (sec/m^3) or deposition (m^{-2}) factor for the compass sector and distance of interest. This is the 15th percentile value such that worse weather conditions can only exist 15% of the time and better weather conditions 85% of the time.

$$m = \frac{\log (ANMX/F15MX)}{\log (8760)}$$

The atmospheric transport and diffusion model used in the evaluation of short-term dispersion and deposition parameters (F15MX) is the Gaussian plume-centerline model in Regulatory Guide 1.145 (Ref. 19), adapted for mixed-mode releases with plume-rise effects, downwash, building-wake correction and plume meander considerations. As was the case with the annual average parameters, the analyses were carried out using the AEOLUS-3 computer code (Ref. 16) and the 10-year hourly meteorological data base; they are documented in detail in Reference 17.

Note that, in line with the guidance in NUREG-0133 (Ref. 1, Sec. 5.3.1, page 29), short-term releases (equal to or less than 500 hours per year) are considered to be cumulative over the calendar quarter or year, as appropriate. However, from Sec. 3.1.16 of the ODCM, and in line with Sec. 3.3, page 8 of NUREG-0133, gas-decay tank releases and containment purges have been determined to be sufficiently random so as to permit use of the long-term dispersion and deposition parameters for assessment of their radiological impact.

3.5.6 The short term 15th percentile dispersion or deposition factor for use in the equation of the preceding paragraphs and the simplified F factor equation are as follows:

a) Site Boundary Noble Gas:

F15MX (380m, SSW, inhalation) = 9.67E-5 sm^{-3}
ANMX (380m, SSW, inhalation) = 4.85E-6 sm^{-3}

$$F = [NTOTAL/8760]^m;\ m = \frac{\log(4.85E\text{-}6/9.70E\text{-}5)}{\log (8760)} = -0.330$$

$$F = [NTOTAL/8760]^{-0.330}$$

b) Nearest Residence Inhalation:

F15MX (730m, E, inhalation) = 3.00E-5 sm^{-3}
ANMX (1526m, SSW, inhalation) = 8.96E-7 sm^{-3}

$$F = [NTOTAL/8760]^m;\ m = \frac{\log(8.96E\text{-}7/3.00E\text{-}5)}{\log (8760)} = -0.387$$

$$F = [NTOTAL/8760]^{-0.387}$$

c) Nearest Residence Deposition:

F15MX (730m, E, Dep.) = 2.61E-7 m^{-2}
ANMX (1280m, S, Dep.) = 6.14E-9 m^{-2}

$$F = [NTOTAL/8760]^m; \quad m = \frac{\log(6.14E-9/2.61E-7)}{\log(8760)} = -0.413$$

$$F = [NTOTAL/8760]^{-0.413}$$

d) 5 Mile Inhalation:

F15MX (5 mi, Down Valley Sectors, inhal.) = 6.19E-6 sm^{-3}
ANMX (5 mi, Down Valley Sectors, inhal.) = 7.22E-7 sm^{-3}

$$F = [NTOTAL/8760]m; \quad m = \frac{\log(7.22E-7/6.19E-6)}{\log(8760)} = -0.247$$

$$F = [NTOTAL/8760]^{-0.247}$$

e) 5 Mile Deposition:

F15MX (5 mi, Down Valley Sectors, Dep) = 9.50E-9 m^{-2}
ANMX (5 mi, Down Valley Sectors, Dep) = 1.35E-9 m^{-2}

$$F = [NTOTAL/8760]^m; \quad m = \frac{\log(1.35E-9/9.50E-9)}{\log(8760)} = -0.215$$

$$F = [NTOTAL/8760]^{-0.215}$$

3.6 Justification for and Use of Finite Cloud Assumption for Assessing Site Boundary Dose

Two models are currently available for the computation of doses from external gamma radiation:

a) The semi-infinite cloud model, which is conservatively applicable only for ground-level releases assumes ground level airborne concentrations are the same throughout a cloud that is large in extent relative to the photon path lengths in air.

b) The finite-cloud model, which takes into consideration the actual plume dimensions and the elevation above the receptor.

The semi-infinite cloud model (which is normally used in a variety of applications because of its simplicity) has two drawbacks:

It could be overly conservative for receptors close to the release point (particularly for ground-level releases under stable conditions with limited plume dispersion) due to the basis that the high concentration at the receptor is assumed to exist everywhere, and

It is not suitable for elevated releases since gamma radiation emanating from the radioactive cloud could still reach a receptor on the ground even though the plume is still aloft (i.e., even though the concentration at ground level is equal to zero).

For practical applications, it is possible to define isotope-dependent finite-cloud correction factors to express the difference in external radiation exposures between a finite cloud (which may be either at ground level or elevated) and a semi-finite cloud. Physically speaking, when such a correction factor is applied to the calculated ground-level concentration resulting from a given plume, it will define the equivalent concentration in a semi-infinite cloud which would yield the same external exposure as the finite cloud. Such a correction factor is a function of both the airborne radionuclide energy and of plume dispersion under the prevailing conditions. At distant receptors, where the plume dimensions reach limiting conditions, such correction factors reduce to unity.

The AEOLUS-3 code (which was used for the determination of the annual average dispersion and deposition parameters listed above), also has the capability of providing a basis for computation of isotope-specific finite-cloud correction factors based on the models in "Meteorology and Atomic Energy" (Ref. 20, Sec. 7.5.2). The code was used (along with the mixed-mode release option and the 10-year hourly meteorological data base) for the determination of the correction factors as would be applicable at the IP3 site boundary.

Note that the correction factors can be viewed as adjustment factors to the dose conversion factors in Regulatory Guide 1.109 (Ref. 3) for immersion in semi-infinite clouds. The nuclide specific correction factors and adjusted dose factors are presented in Tables 3.4 and 3.6 for the IP3 site boundary.

For the monitor tank pathway (ground release concentration X/Q), use of the finite cloud corrected data presented in tables 3-4 and 3-6 will provide a conservative result. The conservativism is due to the indicated correction factors for the mixed mode case yielding larger correction factors per nuclide. However, in the event that a ground level specific finite cloud correction factor is desired (which will yield lower calculated doses) the Xe-133 gamma X/Q value may be used as described in Reference 21.

Table 3-1a

ADULT INHALATION DOSE FACTORS

(mrem per pCi inhaled)

Isotope	BONE	LIVER	TOT BODY	THYROID	KIDNEY	LUNG	GILLI
H-3	0.00E+00	1.58E-07	1.58E-07	1.58E-07	1.58E-07	1.58E-07	1.58E-07
Be-7	0.00E+00	0.00E+00	0.00E+00	0.00E+00	0.00E+00	0.00E+00	0.00E+00
Na-24	1.28E-06	1.28E-06	1.28E-06	1.28E-06	1.28E-06	1.28E-06	1.28E-06
P-32	1.65E-04	9.64E-06	6.26E-06	0.00E+00	0.00E+00	0.00E+00	1.08E-05
Cr-51	0.00E+00	0.00E+00	1.25E-08	7.44E-09	2.85E-09	1.80E-06	4.15E-07
Mn-54	0.00E+00	4.95E-06	7.87E-07	0.00E+00	1.23E-06	1.75E-04	9.67E-06
Mn-56	0.00E+00	1.55E-10	2.29E-11	0.00E+00	1.63E-10	1.18E-06	2.53E-06
Fe-55	3.07E-06	2.12E-06	4.93E-07	0.00E+00	0.00E+00	9.01E-06	7.54E-07
Fe-59	1.47E-06	3.47E-06	1.32E-06	0.00E+00	0.00E+00	1.27E-04	2.35E-05
Co-58	0.00E+00	1.98E-07	2.59E-07	0.00E+00	0.00E+00	1.16E-04	1.33E-05
Co-60	0.00E+00	1.44E-06	1.85E-06	0.00E+00	0.00E+00	7.46E-04	3.56E-05
Ni-63	5.40E-05	3.93E-06	1.81E-06	0.00E+00	0.00E+00	2.23E-05	1.67E-06
Ni-65	1.92E-10	2.62E-11	1.14E-11	0.00E+00	0.00E+00	7.00E-07	1.54E-06
Cu-64	0.00E+00	1.83E-10	7.69E-11	0.00E+00	5.78E-10	8.48E-07	6.12E-06
Zn-65	4.05E-06	1.29E-05	5.82E-06	0.00E+00	8.62E-06	1.08E-04	6.68E-06
Zn-69	4.23E-12	8.14E-12	5.65E-13	0.00E+00	5.27E-12	1.15E-07	2.04E-09
Br-83	0.00E+00	0.00E+00	3.01E-08	0.00E+00	0.00E+00	0.00E+00	2.90E-08
Br-84	0.00E+00	0.00E+00	3.91E-08	0.00E+00	0.00E+00	0.00E+00	2.05E-13
Br-85	0.00E+00	0.00E+00	1.60E-09	0.00E+00	0.00E+00	0.00E+00	0.00E+00
Rb-86	0.00E+00	1.69E-05	7.37E-06	0.00E+00	0.00E+00	0.00E+00	2.08E-06
Rb-88	0.00E+00	4.84E-08	2.41E-08	0.00E+00	0.00E+00	0.00E+00	4.18E-19
Rb-89	0.00E+00	3.20E-08	2.12E-08	0.00E+00	0.00E+00	0.00E+00	1.16E-21
Sr-89	3.80E-05	0.00E+00	1.09E-06	0.00E+00	0.00E+00	1.75E-04	4.37E-05
Sr-90	1.24E-02	0.00E+00	7.62E-04	0.00E+00	0.00E+00	1.20E-03	9.02E-05
Sr-91	7.74E-09	0.00E+00	3.13E-10	0.00E+00	0.00E+00	4.56E-06	2.39E-05
Sr-92	8.43E-10	0.00E+00	3.64E-11	0.00E+00	0.00E+00	2.06E-06	5.38E-06
Y-90	2.61E-07	0.00E+00	7.01E-09	0.00E+00	0.00E+00	2.12E-05	6.32E-05
Y-91m	3.26E-11	0.00E+00	1.27E-12	0.00E+00	0.00E+00	2.40E-07	1.66E-10
Y-91	5.78E-05	0.00E+00	1.55E-06	0.00E+00	0.00E+00	2.13E-04	4.81E-05
Y-92	1.29E-09	0.00E+00	3.77E-11	0.00E+00	0.00E+00	1.96E-06	9.19E-06
Y-93	1.18E-08	0.00E+00	3.26E-10	0.00E+00	0.00E+00	6.06E-06	5.27E-05
Zr-95	1.34E-05	4.30E-06	2.91E-06	0.00E+00	6.77E-06	2.21E-04	1.88E-05
Zr-97	1.21E-08	2.45E-09	1.13E-09	0.00E+00	3.71E-09	9.84E-06	6.54E-05
Nb-95	1.76E-06	9.77E-07	5.26E-07	0.00E+00	9.67E-07	6.31E-05	1.30E-05
Mo-99	0.00E+00	1.51E-08	2.87E-09	0.00E+00	3.64E-08	1.14E-05	3.10E-05
Tc-99m	1.29E-13	3.64E-13	4.63E-12	0.00E+00	5.52E-12	9.55E-08	5.20E-07
Tc-101	5.22E-15	7.52E-15	7.38E-14	0.00E+00	1.35E-13	4.99E-08	1.36E-21
Ru-103	1.91E-07	0.00E+00	8.23E-08	0.00E+00	7.29E-07	6.31E-05	1.38E-05
Ru-105	9.88E-11	0.00E+00	3.89E-11	0.00E+00	1.27E-10	1.37E-06	6.02E-06
Ru-106	8.64E-06	0.00E+00	1.09E-06	0.00E+00	1.67E-05	1.17E-03	1.14E-04
Ag-110m	1.35E-06	1.25E-06	7.43E-07	0.00E+00	2.46E-06	5.79E-04	3.78E-05
Sb-122	0.00E+00	0.00E+00	0.00E+00	0.00E+00	0.00E+00	0.00E+00	0.00E+00
Sb-124	3.90E-06	7.36E-08	1.55E-06	9.44E-09	0.00E+00	3.10E-04	5.08E-05
Sb-125	6.67E-06	7.44E-08	1.58E-06	6.75E-09	0.00E+00	2.18E-04	1.26E-05

Table 3-1a

ADULT INHALATION DOSE FACTORS

(mrem per pCi inhaled)

Isotope	BONE	LIVER	TOT BODY	THYROID	KIDNEY	LUNG	GILLI
Te-125m	4.27E-07	1.98E-07	5.84E-08	1.31E-07	1.55E-06	3.92E-05	8.83E-06
Te-127m	1.58E-06	7.21E-07	1.96E-07	4.11E-07	5.72E-06	1.20E-04	1.87E-05
Te-127	1.75E-10	8.03E-11	3.87E-11	1.32E-10	6.37E-10	8.14E-07	7.17E-06
Te-129m	1.22E-06	5.84E-07	1.98E-07	4.30E-07	4.57E-06	1.45E-04	4.79E-05
Te-129	6.22E-12	2.99E-12	1.55E-12	4.87E-12	2.34E-11	2.42E-07	1.96E-08
Te-131m	8.74E-09	5.45E-09	3.63E-09	6.88E-09	3.86E-08	1.82E-05	6.95E-05
Te-131	1.39E-12	7.44E-13	4.49E-13	1.17E-12	5.46E-12	1.74E-07	2.30E-09
Te-132	3.25E-08	2.69E-08	2.02E-08	2.37E-08	1.82E-07	3.60E-05	6.37E-05
I-130	5.72E-07	1.68E-06	6.60E-07	1.42E-04	2.61E-06	0.00E+00	9.61E-07
I-131	3.15E-06	4.47E-06	2.56E-06	1.49E-03	7.66E-06	0.00E+00	7.85E-07
I-132	1.45E-07	4.07E-07	1.45E-07	1.43E-05	6.48E-07	0.00E+00	5.08E-08
I-133	1.08E-06	1.85E-06	5.65E-07	2.69E-04	3.23E-06	0.00E+00	1.11E-06
I-134	8.05E-08	2.16E-07	7.69E-08	3.73E-06	3.44E-07	0.00E+00	1.26E-10
I-135	3.35E-07	8.73E-07	3.21E-07	5.60E-05	1.39E-06	0.00E+00	6.56E-07
Cs-134	4.66E-05	1.06E-04	9.10E-05	0.00E+00	3.59E-05	1.22E-05	1.30E-06
Cs-136	4.88E-06	1.83E-05	1.38E-05	0.00E+00	1.07E-05	1.50E-06	1.46E-06
Cs-137	5.98E-05	7.76E-05	5.35E-05	0.00E+00	2.78E-05	9.40E-06	1.05E-06
Cs-138	4.14E-08	7.76E-08	4.05E-08	0.00E+00	6.00E-08	6.07E-09	2.33E-13
Ba-139	1.17E-10	3.32E-14	3.42E-12	0.00E+00	7.78E-14	4.70E-07	1.12E-07
Ba-140	4.88E-06	6.13E-09	3.21E-07	0.00E+00	2.09E-09	1.59E-04	2.73E-05
Ba-141	1.25E-11	9.41E-15	4.20E-13	0.00E+00	8.75E-15	2.42E-07	1.45E-17
Ba-142	3.29E-12	3.38E-15	2.07E-13	0.00E+00	2.86E-15	1.49E-07	1.96E-26
La-140	4.30E-08	2.17E-08	5.73E-09	0.00E+00	0.00E+00	1.70E-05	5.73E-05
La-142	8.54E-11	3.88E-11	9.65E-12	0.00E+00	0.00E+00	7.91E-07	2.64E-07
Ce-141	2.49E-06	1.69E-06	1.91E-07	0.00E+00	7.83E-07	4.52E-05	1.50E-05
Ce-143	2.33E-08	1.72E-08	1.91E-09	0.00E+00	7.60E-09	9.97E-06	2.83E-05
Ce-144	4.29E-04	1.79E-04	2.30E-05	0.00E+00	1.06E-04	9.72E-04	1.02E-04
[illegible]-143	1.17E-06	4.69E-07	5.80E-08	0.00E+00	2.70E-07	3.51E-05	2.50E-05
Pr-144	3.76E-12	1.56E-12	1.91E-13	0.00E+00	8.81E-13	1.27E-07	2.69E-18
Nd-147	6.59E-07	7.62E-07	4.56E-08	0.00E+00	4.45E-07	2.76E-05	2.16E-05
W-187	1.06E-09	8.85E-10	3.10E-10	0.00E+00	0.00E+00	3.63E-06	1.94E-05
Np-239	2.87E-08	2.82E-09	1.55E-09	0.00E+00	8.75E-09	4.70E-06	1.49E-05
K-40	0.00E+00	0.00E+00	0.00E+00	0.00E+00	0.00E+00	0.00E+00	0.00E+00
Co-57	0.00E+00	8.65E-08	8.39E-08	0.00E+00	0.00E+00	4.62E-05	3.93E-06
Sr-85	4.00E-06	0.00E+00	9.70E-05	0.00E+00	0.00E+00	6.00E-05	7.60E-06
Y-88	0.00E+00	0.00E+00	0.00E+00	0.00E+00	0.00E+00	0.00E+00	0.00E+00
Nb-94	0.00E+00	0.00E+00	0.00E+00	0.00E+00	0.00E+00	0.00E+00	0.00E+00
Nb-97	2.78E-11	7.03E-12	2.56E-12	0.00E+00	8.18E-12	3.00E-07	3.02E-08
Cd-109	0.00E+00	4.90E-05	1.60E-06	0.00E+00	4.70E-05	9.10E-05	8.20E-06
Sn-113	8.20E-06	2.70E-07	5.60E-07	1.70E-07	0.00E+00	1.20E-04	1.50E-06
Ba-133	9.50E-06	4.20E-07	2.50E-06	0.00E+00	2.10E-09	1.90E-04	1.00E-05
Te-134	3.84E-12	3.22E-12	1.57E-12	3.44E-12	2.18E-11	4.34E-07	2.97E-11
Ce-139	0.00E+00	0.00E+00	0.00E+00	0.00E+00	0.00E+00	0.00E+00	0.00E+00
Hg-203	0.00E+00	0.00E+00	0.00E+00	0.00E+00	0.00E+00	0.00E+00	0.00E+00

Table 3-1b

TEEN INHALATION DOSE FACTORS

(mrem per pCi inhaled)

Isotope	BONE	LIVER	TOT BODY	THYROID	KIDNEY	LUNG	GILLI
H-3	0.00E+00	1.59E-07	1.59E-07	1.59E-07	1.59E-07	1.59E-07	1.59E-07
Be-7	0.00E+00	0.00E+00	0.00E+00	0.00E+00	0.00E+00	0.00E+00	0.00E+00
Na-24	1.72E-06	1.72E-06	1.72E-06	1.72E-06	1.72E-06	1.72E-06	1.72E-06
P-32	2.36E-04	1.37E-05	8.95E-06	0.00E+00	0.00E+00	0.00E+00	1.16E-05
Cr-51	0.00E+00	0.00E+00	1.69E-08	9.37E-09	3.84E-09	2.62E-06	3.75E-07
Mn-54	0.00E+00	6.39E-06	1.05E-06	0.00E+00	1.59E-06	2.48E-04	8.35E-06
Mn-56	0.00E+00	2.12E-10	3.15E-11	0.00E+00	2.24E-10	1.90E-06	7.18E-06
Fe-55	4.18E-06	2.98E-06	6.93E-07	0.00E+00	0.00E+00	1.55E-05	7.99E-07
Fe-59	1.99E-06	4.62E-06	1.79E-06	0.00E+00	0.00E+00	1.91E-04	2.23E-05
Co-58	0.00E+00	2.59E-07	3.47E-07	0.00E+00	0.00E+00	1.68E-04	1.19E-05
Co-60	0.00E+00	1.89E-06	2.48E-06	0.00E+00	0.00E+00	1.09E-03	3.24E-05
Ni-63	7.25E-05	5.43E-06	2.47E-06	0.00E+00	0.00E+00	3.84E-05	1.77E-06
Ni-65	2.73E-10	3.66E-11	1.59E-11	0.00E+00	0.00E+00	1.17E-06	4.59E-06
Cu-64	0.00E+00	2.54E-10	1.06E-10	0.00E+00	8.01E-10	1.39E-06	7.68E-06
Zn-65	4.82E-06	1.67E-05	7.80E-06	0.00E+00	1.08E-05	1.55E-04	5.83E-06
Zn-69	6.04E-12	1.15E-11	8.07E-13	0.00E+00	7.53E-12	1.98E-07	3.56E-08
Br-83	0.00E+00	0.00E+00	4.30E-08	0.00E+00	0.00E+00	0.00E+00	0.00E+00
Br-84	0.00E+00	0.00E+00	5.41E-08	0.00E+00	0.00E+00	0.00E+00	0.00E+00
Br-85	0.00E+00	0.00E+00	2.29E-09	0.00E+00	0.00E+00	0.00E+00	0.00E+00
Rb-86	0.00E+00	2.38E-05	1.05E-05	0.00E+00	0.00E+00	0.00E+00	2.21E-06
Rb-88	0.00E+00	6.82E-08	3.40E-08	0.00E+00	0.00E+00	0.00E+00	3.65E-15
Rb-89	0.00E+00	4.40E-08	2.91E-08	0.00E+00	0.00E+00	0.00E+00	4.22E-17
Sr-89	5.43E-05	0.00E+00	1.56E-06	0.00E+00	0.00E+00	3.02E-04	4.64E-05
Sr-90	1.35E-02	0.00E+00	8.35E-04	0.00E+00	0.00E+00	2.06E-03	9.56E-05
Sr-91	1.10E-08	0.00E+00	4.39E-10	0.00E+00	0.00E+00	7.59E-06	3.24E-05
Sr-92	1.19E-09	0.00E+00	5.08E-11	0.00E+00	0.00E+00	3.43E-06	1.49E-05
Y-90	3.73E-07	0.00E+00	1.00E-08	0.00E+00	0.00E+00	3.66E-05	6.99E-05
Y-91m	4.63E-11	0.00E+00	1.77E-12	0.00E+00	0.00E+00	4.00E-07	3.77E-09
Y-91	8.26E-05	0.00E+00	2.21E-06	0.00E+00	0.00E+00	3.67E-04	5.11E-05
Y-92	1.84E-09	0.00E+00	5.36E-11	0.00E+00	0.00E+00	3.35E-06	2.06E-05
Y-93	1.69E-08	0.00E+00	4.65E-10	0.00E+00	0.00E+00	1.04E-05	7.24E-05
Zr-95	1.82E-05	5.73E-06	3.94E-06	0.00E+00	8.42E-06	3.36E-04	1.86E-05
Zr-97	1.72E-08	3.40E-09	1.57E-09	0.00E+00	5.15E-09	1.62E-05	7.88E-05
Nb-95	2.32E-06	1.29E-06	7.08E-07	0.00E+00	1.25E-06	9.39E-05	1.21E-05
Mo-99	0.00E+00	2.11E-08	4.03E-09	0.00E+00	5.14E-08	1.92E-05	3.36E-05
Tc-99m	1.73E-13	4.83E-13	6.24E-12	0.00E+00	7.20E-12	1.44E-07	7.66E-07
Tc-101	7.40E-15	1.05E-14	1.03E-13	0.00E+00	1.90E-13	8.34E-08	1.09E-16
Ru-103	2.63E-07	0.00E+00	1.12E-07	0.00E+00	9.29E-07	9.79E-05	1.36E-05
Ru-105	1.40E-10	0.00E+00	5.42E-11	0.00E+00	1.76E-10	2.27E-06	1.13E-05
Ru-106	1.23E-05	0.00E+00	1.55E-06	0.00E+00	2.38E-05	2.01E-03	1.20E-04
Ag-110m	1.73E-06	1.64E-06	9.99E-07	0.00E+00	3.13E-06	8.44E-04	3.41E-05
Sb-122	0.00E+00	0.00E+00	0.00E+00	0.00E+00	0.00E+00	0.00E+00	0.00E+00
Sb-124	5.38E-06	9.92E-08	2.10E-06	1.22E-08	0.00E+00	4.81E-04	4.98E-05
Sb-125	9.23E-06	1.01E-07	2.15E-06	8.80E-09	0.00E+00	3.42E-04	1.24E-05

Table 3-1b

TEEN INHALATION DOSE FACTORS

(mrem per pCi inhaled)

Isotope	BONE	LIVER	TOT BODY	THYROID	KIDNEY	LUNG	GILLI
Te-125m	6.10E-07	2.80E-07	8.34E-08	1.75E-07	0.00E+00	6.70E-05	9.38E-06
Te-127m	2.25E-06	1.02E-06	2.73E-07	5.48E-07	8.17E-06	2.07E-04	1.99E-05
Te-127	2.51E-10	1.14E-10	5.52E-11	1.77E-10	9.10E-10	1.40E-06	1.01E-05
Te-129m	1.74E-06	8.23E-07	2.81E-07	5.72E-07	6.49E-06	2.47E-04	5.06E-05
Te-129	8.87E-12	4.22E-12	2.20E-12	6.48E-12	3.32E-11	4.12E-07	2.02E-07
Te-131m	1.23E-08	7.51E-09	5.03E-09	9.06E-09	5.49E-08	2.97E-05	7.76E-05
Te-131	1.97E-12	1.04E-12	6.30E-13	1.55E-12	7.72E-12	2.92E-07	1.89E-09
Te-132	4.50E-08	3.63E-08	2.74E-08	3.07E-08	2.44E-07	5.61E-05	5.79E-05
I-130	7.80E-07	2.24E-06	8.96E-07	1.86E-04	3.44E-06	0.00E+00	1.14E-06
I-131	4.43E-06	6.14E-06	3.30E-06	1.83E-03	1.05E-05	0.00E+00	8.11E-07
I-132	1.99E-07	5.47E-07	1.97E-07	1.89E-05	8.65E-07	0.00E+00	1.59E-07
I-133	1.52E-06	2.56E-06	7.78E-07	3.65E-04	4.49E-06	0.00E+00	1.29E-06
I-134	1.11E-07	2.90E-07	1.05E-07	4.94E-06	4.58E-07	0.00E+00	2.55E-09
I-135	4.62E-07	1.18E-06	4.36E-07	7.76E-05	1.86E-06	0.00E+00	8.69E-07
Cs-134	6.28E-05	1.41E-04	6.86E-05	0.00E+00	4.69E-05	1.83E-05	1.22E-06
Cs-136	6.44E-06	2.42E-05	1.71E-05	0.00E+00	1.38E-05	2.22E-06	1.36E-06
Cs-137	8.38E-05	1.06E-04	3.89E-05	0.00E+00	3.80E-05	1.51E-05	1.06E-06
Cs-138	5.82E-08	1.07E-07	5.58E-08	0.00E+00	8.28E-08	9.84E-09	3.38E-11
Ba-139	1.67E-10	1.18E-13	4.87E-12	0.00E+00	1.11E-13	8.08E-07	8.06E-07
Ba-140	6.84E-06	8.38E-09	4.40E-07	0.00E+00	2.85E-09	2.54E-04	2.86E-05
Ba-141	1.78E-11	1.32E-14	5.93E-13	0.00E+00	1.23E-14	4.11E-07	9.33E-14
Ba-142	4.62E-12	4.63E-15	2.84E-13	0.00E+00	3.92E-15	2.39E-07	5.99E-20
La-140	5.99E-08	2.95E-08	7.82E-09	0.00E+00	0.00E+00	2.68E-05	6.09E-05
La-142	1.20E-10	5.31E-11	1.32E-11	0.00E+00	0.00E+00	1.27E-06	1.50E-06
Ce-141	3.55E-06	2.37E-06	2.71E-07	0.00E+00	1.11E-06	7.67E-05	1.58E-05
Ce-143	3.32E-08	2.42E-08	2.70E-09	0.00E+00	1.08E-08	1.63E-05	3.19E-05
Ce-144	6.11E-04	2.53E-04	3.28E-05	0.00E+00	1.51E-04	1.67E-03	1.08E-04
Pr-143	1.67E-06	6.64E-07	8.28E-08	0.00E+00	3.86E-07	6.04E-05	2.67E-05
Pr-144	5.37E-12	2.20E-12	2.72E-13	0.00E+00	1.26E-12	2.19E-07	2.94E-14
Nd-147	9.83E-07	1.07E-06	6.41E-08	0.00E+00	6.28E-07	4.65E-05	2.28E-05
W-187	1.50E-09	1.22E-09	4.29E-10	0.00E+00	0.00E+00	5.92E-06	2.21E-05
Np-239	4.23E-08	3.99E-09	2.21E-09	0.00E+00	1.25E-08	8.11E-06	1.65E-05
K-40	0.00E+00	0.00E+00	0.00E+00	0.00E+00	0.00E+00	0.00E+00	0.00E+00
Co-57	0.00E+00	1.18E-07	1.15E-07	0.00E+00	0.00E+00	7.33E-05	3.93E-06
Sr-85	5.00E-06	0.00E+00	1.30E-06	0.00E+00	0.00E+00	8.80E-05	6.90E-06
Y-88	0.00E+00	0.00E+00	0.00E+00	0.00E+00	0.00E+00	0.00E+00	0.00E+00
Nb-94	0.00E+00	0.00E+00	0.00E+00	0.00E+00	0.00E+00	0.00E+00	0.00E+00
Nb-97	3.93E-11	9.72E-12	3.55E-12	0.00E+00	1.14E-11	4.91E-07	2.71E-07
Cd-109	0.00E+00	1.00E-04	3.40E-06	0.00E+00	6.70E-05	1.60E-04	8.60E-06
Sn-113	1.50E-05	4.70E-07	9.70E-07	2.90E-07	0.00E+00	2.00E-04	1.50E-06
Ba-133	4.70E-05	8.00E-07	3.30E-06	0.00E+00	2.80E-09	2.90E-04	9.70E-06
Te-134	5.31E-12	4.35E-12	3.64E-12	4.46E-12	2.91E-11	6.75E-07	1.37E-09
Ce-139	0.00E+00	0.00E+00	0.00E+00	0.00E+00	0.00E+00	0.00E+00	0.00E+00
Hg-203	0.00E+00	0.00E+00	0.00E+00	0.00E+00	0.00E+00	0.00E+00	0.00E+00

Table 3-1c

CHILD INHALATION DOSE FACTORS

(mrem per pCi inhaled)

Isotope	BONE	LIVER	TOT BODY	THYROID	KIDNEY	LUNG	GILLI
H-3	0.00E+00	3.04E-07	3.04E-07	3.04E-07	3.04E-07	3.04E-07	3.04E-07
Be-7	0.00E+00	0.00E+00	0.00E+00	0.00E+00	0.00E+00	0.00E+00	0.00E+00
Na-24	4.35E-06	4.35E-06	4.35E-06	4.35E-06	4.35E-06	4.35E-06	4.35E-06
P-32	7.04E-04	3.09E-05	2.67E-05	0.00E+00	0.00E+00	0.00E+00	1.14E-05
Cr-51	0.00E+00	0.00E+00	4.17E-08	2.31E-08	6.57E-09	4.59E-06	2.93E-07
Mn-54	0.00E+00	1.16E-05	2.57E-06	0.00E+00	2.71E-06	4.26E-04	6.19E-06
Mn-56	0.00E+00	4.48E-10	8.43E-11	0.00E+00	4.52E-10	3.55E-06	3.33E-05
Fe-55	1.28E-05	6.80E-06	2.10E-06	0.00E+00	0.00E+00	3.00E-05	7.75E-07
Fe-59	5.59E-06	9.04E-06	4.51E-06	0.00E+00	0.00E+00	3.43E-04	1.91E-05
Co-58	0.00E+00	4.79E-07	8.55E-07	0.00E+00	0.00E+00	2.99E-04	9.29E-06
Co-60	0.00E+00	3.55E-06	6.12E-06	0.00E+00	0.00E+00	1.91E-03	2.60E-05
Ni-63	2.22E-04	1.25E-05	7.56E-06	0.00E+00	0.00E+00	7.43E-05	1.71E-06
Ni-65	8.08E-10	7.99E-11	4.44E-11	0.00E+00	0.00E+00	2.21E-06	2.27E-05
Cu-64	0.00E+00	5.39E-10	2.90E-10	0.00E+00	1.63E-09	2.59E-06	9.92E-06
Zn-65	1.15E-05	3.06E-05	1.90E-05	0.00E+00	1.93E-05	2.69E-04	4.41E-06
Zn-69	1.81E-11	2.61E-11	2.41E-12	0.00E+00	1.58E-11	3.84E-07	2.75E-06
Br-83	0.00E+00	0.00E+00	1.28E-07	0.00E+00	0.00E+00	0.00E+00	0.00E+00
Br-84	0.00E+00	0.00E+00	1.48E-07	0.00E+00	0.00E+00	0.00E+00	0.00E+00
Br-85	0.00E+00	0.00E+00	6.84E-09	0.00E+00	0.00E+00	0.00E+00	0.00E+00
Rb-86	0.00E+00	5.36E-05	3.09E-05	0.00E+00	0.00E+00	0.00E+00	2.16E-06
Rb-88	0.00E+00	1.52E-07	9.90E-08	0.00E+00	0.00E+00	0.00E+00	4.66E-09
Rb-89	0.00E+00	9.33E-08	7.83E-08	0.00E+00	0.00E+00	0.00E+00	5.11E-10
Sr-89	1.62E-04	0.00E+00	4.66E-06	0.00E+00	0.00E+00	5.83E-04	4.52E-05
Sr-90	2.73E-02	0.00E+00	1.74E-03	0.00E+00	0.00E+00	3.99E-03	9.28E-05
Sr-91	3.28E-08	0.00E+00	1.24E-09	0.00E+00	0.00E+00	1.44E-05	4.70E-05
Sr-92	3.54E-09	0.00E+00	1.42E-10	0.00E+00	0.00E+00	6.49E-06	6.55E-05
Y-90	1.11E-06	0.00E+00	2.99E-08	0.00E+00	0.00E+00	7.07E-05	7.24E-05
Y-91m	1.37E-10	0.00E+00	4.98E-12	0.00E+00	0.00E+00	7.60E-07	4.64E-07
Y-91	2.47E-04	0.00E+00	6.59E-06	0.00E+00	0.00E+00	7.10E-04	4.97E-05
Y-92	5.50E-09	0.00E+00	1.57E-10	0.00E+00	0.00E+00	6.46E-06	6.46E-05
Y-93	5.04E-08	0.00E+00	1.38E-09	0.00E+00	0.00E+00	2.01E-05	1.05E-04
Zr-95	5.13E-05	1.13E-05	1.00E-05	0.00E+00	1.61E-05	6.03E-04	1.65E-05
Zr-97	5.07E-08	7.34E-09	4.32E-09	0.00E+00	1.05E-08	3.06E-05	9.49E-05
Nb-95	6.35E-06	2.48E-06	1.77E-06	0.00E+00	2.33E-06	1.66E-04	1.00E-05
Mo-99	0.00E+00	4.66E-08	1.15E-08	0.00E+00	1.06E-07	3.66E-05	3.42E-05
Tc-99m	4.81E-13	9.41E-13	1.56E-11	0.00E+00	1.37E-11	2.57E-07	1.30E-06
Tc-101	2.19E-14	2.30E-14	2.91E-13	0.00E+00	3.92E-13	1.58E-07	4.41E-09
Ru-103	7.55E-07	0.00E+00	2.90E-07	0.00E+00	1.90E-06	1.79E-04	1.21E-05
Ru-105	4.13E-10	0.00E+00	1.50E-10	0.00E+00	3.63E-10	4.30E-06	2.69E-05
Ru-106	3.68E-05	0.00E+00	4.57E-06	0.00E+00	4.97E-05	3.87E-03	1.16E-04
Ag-110m	4.56E-06	3.08E-06	2.47E-06	0.00E+00	5.74E-06	1.48E-03	2.71E-05
Sb-122	0.00E+00	0.00E+00	0.00E+00	0.00E+00	0.00E+00	0.00E+00	0.00E+00
Sb-124	1.55E-05	2.00E-07	5.41E-06	3.41E-08	0.00E+00	8.76E-04	4.43E-05
Sb-125	2.66E-05	2.05E-07	5.59E-06	2.46E-08	0.00E+00	6.27E-04	1.09E-05

Table 3-1c

CHILD INHALATION DOSE FACTORS

(mrem per pCi inhaled)

Isotope	BONE	LIVER	TOT BODY	THYROID	KIDNEY	LUNG	GILLI
Te-125m	1.82E-06	6.29E-07	2.47E-07	5.20E-07	0.00E+00	1.29E-04	9.13E-06
Te-127m	6.72E-06	2.31E-06	8.16E-07	1.64E-06	1.72E-05	4.00E-04	1.93E-05
Te-127	7.49E-10	2.57E-10	1.65E-10	5.30E-10	1.91E-09	2.71E-06	1.52E-05
Te-129m	5.19E-06	1.85E-06	8.22E-07	1.71E-06	1.36E-05	4.76E-04	4.91E-05
Te-129	2.64E-11	9.45E-12	6.44E-12	1.93E-11	6.94E-11	7.93E-07	6.89E-06
Te-131m	3.63E-08	1.60E-08	1.37E-08	2.64E-08	1.08E-07	5.56E-05	8.32E-05
Te-131	5.87E-12	2.28E-12	1.78E-12	4.59E-12	1.59E-11	5.55E-07	3.60E-07
Te-132	1.30E-07	7.36E-08	7.12E-08	8.58E-08	4.79E-07	1.02E-04	3.72E-05
I-130	2.21E-06	4.43E-06	2.28E-06	4.99E-04	6.61E-06	0.00E+00	1.38E-06
I-131	1.30E-05	1.30E-05	7.37E-06	4.39E-03	2.13E-05	0.00E+00	7.68E-07
I-132	5.72E-07	1.10E-06	5.07E-07	5.23E-05	1.69E-06	0.00E+00	8.65E-07
I-133	4.48E-06	5.49E-06	2.08E-06	1.04E-03	9.13E-06	0.00E+00	1.48E-06
I-134	3.17E-07	5.84E-07	2.69E-07	1.37E-05	8.92E-07	0.00E+00	2.58E-07
I-135	1.33E-06	2.36E-06	1.12E-06	2.14E-04	3.62E-06	0.00E+00	1.20E-06
Cs-134	1.76E-04	2.74E-04	6.07E-05	0.00E+00	8.93E-05	3.27E-05	1.04E-06
Cs-136	1.76E-05	4.62E-05	3.14E-05	0.00E+00	2.58E-05	3.93E-06	1.13E-06
Cs-137	2.45E-04	2.23E-04	3.47E-05	0.00E+00	7.63E-05	2.81E-05	9.78E-07
Cs-138	1.71E-07	2.27E-07	1.50E-07	0.00E+00	1.68E-07	1.84E-08	7.29E-08
Ba-139	4.98E-10	2.66E-13	1.45E-11	0.00E+00	2.33E-13	1.56E-06	1.56E-05
Ba-140	2.00E-05	1.75E-08	1.17E-06	0.00E+00	5.71E-09	4.71E-04	2.75E-05
Ba-141	5.29E-11	2.95E-14	1.72E-12	0.00E+00	2.56E-14	7.89E-07	7.44E-08
Ba-142	1.35E-11	9.73E-15	7.54E-13	0.00E+00	7.87E-15	4.44E-07	7.41E-10
La-140	1.74E-07	6.08E-08	2.04E-08	0.00E+00	0.00E+00	4.94E-05	6.10E-05
La-142	3.50E-10	1.11E-10	3.49E-11	0.00E+00	0.00E+00	2.35E-06	2.05E-05
Ce-141	1.06E-05	5.28E-06	7.83E-07	0.00E+00	2.31E-06	1.47E-04	1.53E-05
Ce-143	9.89E-08	5.37E-08	7.77E-09	0.00E+00	2.26E-08	3.12E-05	3.44E-05
Ce-144	1.83E-03	5.72E-04	9.77E-05	0.00E+00	3.17E-04	3.23E-03	1.05E-04
Pr-143	4.99E-06	1.50E-06	2.47E-07	0.00E+00	8.11E-07	1.17E-04	2.63E-05
Pr-144	1.61E-11	4.99E-12	8.10E-13	0.00E+00	2.64E-12	4.23E-07	5.32E-08
Nd-147	2.92E-06	2.36E-06	1.84E-07	0.00E+00	1.30E-06	8.87E-05	2.22E-05
W-187	4.41E-09	2.61E-09	1.17E-09	0.00E+00	0.00E+00	1.11E-05	2.46E-05
Np-239	1.26E-07	9.04E-09	6.35E-09	0.00E+00	2.63E-08	1.57E-05	1.73E-05
K-40	0.00E+00	0.00E+00	0.00E+00	0.00E+00	0.00E+00	0.00E+00	0.00E+00
Co-57	0.00E+00	2.44E-07	2.88E-07	0.00E+00	0.00E+00	1.37E-04	3.58E-06
Sr-85	1.20E-05	0.00E+00	3.20E-06	0.00E+00	0.00E+00	1.50E-04	5.50E-06
Y-88	0.00E+00	0.00E+00	0.00E+00	0.00E+00	0.00E+00	0.00E+00	0.00E+00
Nb-94	0.00E+00	0.00E+00	0.00E+00	0.00E+00	0.00E+00	0.00E+00	0.00E+00
Nb-97	1.16E-10	2.08E-11	9.73E-12	0.00E+00	2.31E-11	9.24E-07	7.51E-06
Cd-109	0.00E+00	1.90E-04	8.00E-06	0.00E+00	1.70E-04	3.00E-04	8.10E-06
Sn-113	3.80E-05	8.90E-07	2.30E-06	7.10E-07	0.00E+00	3.60E-04	1.30E-06
Ba-133	1.10E-04	1.10E-06	1.00E-05	0.00E+00	5.40E-09	5.20E-04	8.30E-06
Te-134	1.53E-11	8.81E-12	9.40E-12	1.24E-11	5.71E-11	1.23E-06	4.87E-07
Ce-139	0.00E+00	0.00E+00	0.00E+00	0.00E+00	0.00E+00	0.00E+00	0.00E+00
Hg-203	0.00E+00	0.00E+00	0.00E+00	0.00E+00	0.00E+00	0.00E+00	0.00E+00

Table 3-1d

INFANT INHALATION DOSE FACTORS

(mrem per pCi inhaled)

Isotope	BONE	LIVER	TOT BODY	THYROID	KIDNEY	LUNG	GILLI
H-3	0.00E+00	4.62E-07	4.62E-07	4.62E-07	4.62E-07	4.62E-07	4.62E-07
Be-7	0.00E+00	0.00E+00	0.00E+00	0.00E+00	0.00E+00	0.00E+00	0.00E+00
Na-24	7.54E-06	7.54E-06	7.54E-06	7.54E-06	7.54E-06	7.54E-06	7.54E-06
P-32	1.45E-03	8.03E-05	5.53E-05	0.00E+00	0.00E+00	0.00E+00	1.15E-05
Cr-51	0.00E+00	0.00E+00	6.39E-08	4.11E-08	9.45E-09	9.17E-06	2.55E-07
Mn-54	0.00E+00	1.81E-05	3.56E-06	0.00E+00	3.56E-06	7.14E-04	5.04E-06
Mn-56	0.00E+00	1.10E-09	1.58E-10	0.00E+00	7.86E-10	8.95E-06	5.12E-05
Fe-55	1.41E-05	8.39E-06	2.38E-06	0.00E+00	0.00E+00	6.21E-05	7.82E-07
Fe-59	9.69E-06	1.68E-05	6.77E-06	0.00E+00	0.00E+00	7.25E-04	1.77E-05
Co-58	0.00E+00	8.71E-07	1.30E-06	0.00E+00	0.00E+00	5.55E-04	7.95E-06
Co-60	0.00E+00	5.73E-06	8.41E-06	0.00E+00	0.00E+00	3.22E-03	2.28E-05
Ni-63	2.42E-04	1.46E-05	8.29E-06	0.00E+00	0.00E+00	1.49E-04	1.73E-06
Ni-65	1.71E-09	2.03E-10	8.79E-11	0.00E+00	0.00E+00	5.80E-06	3.58E-05
Cu-64	0.00E+00	1.34E-09	5.53E-10	0.00E+00	2.84E-09	6.64E-06	1.07E-05
Zn-65	1.38E-05	4.47E-05	2.22E-05	0.00E+00	2.32E-05	4.62E-04	3.67E-05
Zn-69	3.85E-11	6.91E-11	5.13E-12	0.00E+00	2.87E-11	1.05E-06	9.44E-06
Br-83	0.00E+00	0.00E+00	2.72E-07	0.00E+00	0.00E+00	0.00E+00	0.00E+00
Br-84	0.00E+00	0.00E+00	2.86E-07	0.00E+00	0.00E+00	0.00E+00	0.00E+00
Br-85	0.00E+00	0.00E+00	1.46E-08	0.00E+00	0.00E+00	0.00E+00	0.00E+00
Rb-86	0.00E+00	1.36E-04	6.30E-05	0.00E+00	0.00E+00	0.00E+00	2.17E-06
Rb-88	0.00E+00	3.98E-07	2.05E-07	0.00E+00	0.00E+00	0.00E+00	2.42E-07
Rb-89	0.00E+00	2.29E-07	1.47E-07	0.00E+00	0.00E+00	0.00E+00	4.87E-08
Sr-89	2.84E-04	0.00E+00	8.15E-06	0.00E+00	0.00E+00	1.45E-03	4.57E-05
Sr-90	2.92E-02	0.00E+00	1.85E-03	0.00E+00	0.00E+00	8.03E-03	9.36E-05
Sr-91	6.83E-08	0.00E+00	2.47E-09	0.00E+00	0.00E+00	3.76E-05	5.24E-05
Sr-92	7.50E-09	0.00E+00	2.79E-10	0.00E+00	0.00E+00	1.70E-05	1.00E-04
Y-90	2.35E-06	0.00E+00	6.30E-08	0.00E+00	0.00E+00	1.92E-04	7.43E-05
Y-91m	2.91E-10	0.00E+00	9.90E-12	0.00E+00	0.00E+00	1.99E-06	1.68E-06
Y-91	4.20E-04	0.00E+00	1.12E-05	0.00E+00	0.00E+00	1.75E-03	5.02E-05
Y-92	1.17E-08	0.00E+00	3.29E-10	0.00E+00	0.00E+00	1.75E-05	9.04E-05
Y-93	1.07E-07	0.00E+00	2.91E-09	0.00E+00	0.00E+00	5.46E-05	1.19E-04
Zr-95	8.24E-05	1.99E-05	1.45E-05	0.00E+00	2.22E-05	1.25E-03	1.55E-05
Zr-97	1.07E-07	1.83E-08	8.36E-09	0.00E+00	1.85E-08	7.88E-05	1.00E-04
Nb-95	1.12E-05	4.59E-06	2.70E-06	0.00E+00	3.37E-06	3.42E-04	9.05E-06
Mo-99	0.00E+00	1.18E-07	2.31E-08	0.00E+00	1.89E-07	9.63E-05	3.48E-05
Tc-99m	9.98E-13	2.06E-12	2.66E-11	0.00E+00	2.22E-11	5.79E-07	1.45E-06
Tc-101	4.65E-14	5.88E-14	5.80E-13	0.00E+00	6.99E-13	4.17E-07	6.03E-07
Ru-103	1.44E-06	0.00E+00	4.85E-07	0.00E+00	3.03E-06	3.94E-04	1.15E-05
Ru-105	8.74E-10	0.00E+00	2.93E-10	0.00E+00	6.42E-10	1.12E-05	3.46E-05
Ru-106	6.20E-05	0.00E+00	7.77E-06	0.00E+00	7.61E-05	8.26E-03	1.17E-04
Ag-110m	7.13E-06	5.16E-06	3.57E-06	0.00E+00	7.80E-06	2.62E-03	2.36E-05
Sb-122	0.00E+00	0.00E+00	0.00E+00	0.00E+00	0.00E+00	0.00E+00	0.00E+00
Sb-124	2.71E-05	3.97E-07	8.56E-06	7.18E-08	0.00E+00	1.89E-03	4.22E-05
Sb-125	3.69E-05	3.41E-07	7.78E-06	4.45E-08	0.00E+00	1.17E-03	1.05E-05

Table 3-1d

INFANT INHALATION DOSE FACTORS

(mrem per pCi inhaled)

Isotope	BONE	LIVER	TOT BODY	THYROID	KIDNEY	LUNG	GI LLI
Te-125m	3.40E-06	1.42E-06	4.70E-07	1.16E-06	0.00E+00	3.19E-04	9.22E-06
Te-127m	1.19E-05	4.93E-06	1.48E-06	3.48E-06	2.68E-05	9.37E-04	1.95E-05
Te-127	1.59E-05	6.81E-10	3.49E-10	1.32E-09	3.47E-09	7.39E-06	1.74E-05
Te-129m	1.01E-05	4.35E-06	1.59E-06	3.91E-06	2.27E-05	1.20E-03	4.93E-05
Te-129	5.63E-11	2.48E-11	1.34E-11	4.82E-11	1.25E-10	2.14E-06	1.88E-05
Te-131m	7.52E-08	3.93E-08	2.59E-08	6.38E-08	1.89E-07	1.42E-04	8.51E-05
Te-131	1.24E-11	5.87E-12	3.57E-12	1.13E-11	2.85E-11	1.47E-06	5.87E-06
Te-132	2.66E-07	1.69E-07	1.26E-07	1.99E-07	7.39E-07	2.43E-04	3.15E-05
I-130	4.54E-06	9.[illegible]E-06	3.98E-06	1.14E-03	1.09E-05	0.00E+00	1.42E-06
I-131	2.71E-05	3.17E-05	1.40E-05	1.06E-02	3.70E-05	0.00E+00	7.56E-07
I-132	1.21E-06	2.53E-06	8.99E-07	1.21E-04	2.82E-06	0.00E+00	1.36E-06
I-133	9.46E-06	1.37E-05	4.00E-06	2.54E-03	1.60E-05	0.00E+00	1.54E-06
I-134	6.58E-07	1.34E-06	4.75E-07	3.18E-05	1.49E-06	0.00E+00	9.21E-07
I-135	2.76E-06	5.43E-06	1.98E-06	4.97E-04	6.05E-06	0.00E+00	1.31E-06
Cs-134	2.83E-04	5.02E-04	5.32E-05	0.00E+00	1.36E-04	5.69E-05	9.53E-07
Cs-136	3.45E-05	9.61E-05	3.78E-05	0.00E+00	4.03E-05	8.40E-06	1.02E-06
Cs-137	3.92E-04	4.37E-04	3.25E-05	0.00E+00	1.23E-04	5.09E-05	9.53E-07
Cs-138	3.61E-07	5.58E-07	2.84E-07	0.00E+00	2.93E-07	4.67E-08	6.26E-07
Ba-139	1.06E-09	7.03E-13	3.07E-11	0.00E+00	4.23E-13	4.25E-06	3.64E-05
Ba-140	4.00E-05	4.00E-08	2.07E-06	0.00E+00	9.59E-09	1.14E-03	2.74E-05
Ba-141	1.12E-10	7.70E-14	3.55E-12	0.00E+00	4.64E-14	2.12E-06	3.39E-06
Ba-142	2.84E-11	2.36E-14	1.40E-12	0.00E+00	1.36E-14	1.11E-06	4.95E-07
La-140	3.61E-07	1.43E-07	3.68E-08	0.00E+00	0.00E+00	1.20E-04	6.06E-05
La-142	7.36E-10	2.69E-10	6.46E-11	0.00E+00	0.00E+00	5.87E-06	4.25E-05
Ce-141	1.98E-05	1.19E-05	1.42E-06	0.00E+00	3.75E-06	3.69E-04	1.54E-05
Ce-143	2.09E-07	1.38E-07	1.58E-08	0.00E+00	4.03E-08	8.30E-05	3.55E-05
Ce-144	2.28E-03	8.65E-04	1.26E-04	0.00E+00	3.84E-04	7.03E-03	1.06E-04
Pr-143	1.00E-05	3.74E-06	4.99E-07	0.00E+00	1.41E-06	3.09E-04	2.66E-05
Pr-144	3.42E-11	1.32E-11	1.72E-12	0.00E+00	4.80E-12	1.15E-06	3.06E-06
Nd-147	5.67E-06	5.81E-06	3.57E-07	0.00E+00	2.25E-06	2.30E-04	2.23E-05
W-187	9.26E-09	6.44E-09	2.23E-09	0.00E+00	0.00E+00	2.83E-05	2.54E-05
Np-239	2.65E-07	2.37E-08	1.34E-08	0.00E+00	4.73E-08	4.25E-05	1.78E-05
K-40	0.00E+00	0.00E+00	0.00E+00	0.00E+00	0.00E+00	0.00E+00	0.00E+00
Co-57	0.00E+00	4.65E-07	4.58E-07	0.00E+00	0.00E+00	2.71E-04	3.47E-06
Sr-85	2.70E-05	0.00E+00	5.40E-06	0.00E+00	0.00E+00	3.00E-04	4.80E-06
Y-88	0.00E+00	0.00E+00	0.00E+00	0.00E+00	0.00E+00	0.00E+00	0.00E+00
Nb-94	0.00E+00	0.00E+00	0.00E+00	0.00E+00	0.00E+00	0.00E+00	0.00E+00
Nb-97	2.44E-10	5.21E-11	1.88E-11	0.00E+00	4.07E-11	2.37E-06	1.92E-05
Cd-109	0.00E+00	2.60E-04	1.00E-05	0.00E+00	2.00E-04	6.20E-04	8.00E-06
Sn-113	6.00E-05	1.60E-06	3.60E-06	1.30E-06	0.00E+00	7.80E-04	1.20E-06
Ba-133	1.90E-04	1.70E-06	1.30E-05	0.00E+00	8.90E-09	9.10E-04	7.70E-06
Te-134	3.18E-11	2.04E-11	1.68E-11	2.91E-11	9.59E-11	2.93E-06	2.53E-06
Ce-139	0.00E+00	0.00E+00	0.00E+00	0.00E+00	0.00E+00	0.00E+00	0.00E+00
Hg-203	0.00E+00	0.00E+00	0.00E+00	0.00E+00	0.00E+00	0.00E+00	0.00E+00

Table 3-2

Total Body & Skin Ground Plane Dose Factors (mrem/hr per pCi/m^2) with Isotope half-life and Stable Element Transfer Data (Fm, cow)

				Ground Plane Dose Factors	
Isotope	Halflife	unit	Fm	TotBody(DFg)	Skin(DFs)
H-3	12.350	Y	1.00E-02	0.00E+00	0.00E+00
Be-7	53.300	D	1.00E-04	0.00E+00	0.00E+00
Na-24	15.000	H	4.00E-02	2.50E-08	2.90E-08
P-32	14.290	D	2.50E-02	0.00E+00	0.00E+00
Cr-51	27.704	D	2.20E-03	2.20E-10	2.60E-10
Mn-54	312.500	D	2.50E-04	5.80E-09	6.80E-09
Mn-56	2.578	H	2.50E-04	1.10E-08	1.30E-08
Fe-55	2.700	Y	1.20E-03	0.00E+00	0.00E+00
Fe-59	44.529	D	1.20E-03	8.00E-09	9.40E-09
Co-58	70.800	D	1.00E-03	7.00E-09	8.20E-09
Co-60	5.271	Y	1.00E-03	1.70E-08	2.00E-08
Ni-63	96.000	Y	6.70E-03	0.00E+00	0.00E+00
Ni-65	2.520	H	6.70E-03	3.70E-09	4.30E-09
Cu-64	12.701	H	1.40E-02	1.50E-09	1.70E-09
Zn-65	243.900	D	3.90E-02	4.00E-09	4.60E-09
Zn-69	0.950	H	3.90E-02	0.00E+00	0.00E+00
Br-83	2.390	H	5.00E-02	6.40E-11	9.30E-11
Br-84	0.530	H	5.00E-02	1.20E-08	1.40E-08
Br-85	0.050	H	5.00E-02	0.00E+00	0.00E+00
Rb-86	18.660	D	3.00E-02	6.30E-10	7.20E-10
Rb-88	0.297	H	3.00E-02	3.50E-09	4.00E-09
Rb-89	0.253	H	3.00E-02	1.50E-08	1.80E-08
Sr-89	50.500	D	8.00E-04	5.60E-13	6.50E-13
Sr-90	29.120	Y	8.00E-04	0.00E+00	0.00E+00
Sr-91	9.500	H	8.00E-04	7.10E-09	8.30E-09
Sr-92	2.710	H	8.00E-04	9.00E-09	1.00E-08
Y-90	2.667	D	1.00E-05	2.20E-12	2.60E-12
Y-91m	0.829	H	1.00E-05	3.[illegible]E-09	4.40E-09
Y-91	58.510	D	1.00E-05	2.40E-11	2.70E-11
Y-92	3.540	H	1.00E-05	1.60E-09	1.90E-09
Y-93	10.100	H	1.00E-05	5.70E-10	7.80E-10
Zr-95	63.980	D	5.00E-06	5.00E-09	5.80E-09
Zr-97	16.900	H	5.00E-06	5.50E-09	6.40E-09
Nb-95	35.150	D	2.50E-03	5.10E-09	6.00E-09
Mo-99	2.750	D	7.50E-03	1.90E-09	2.20E-09
Tc-99m	6.020	H	2.50E-02	9.60E-10	1.10E-09
Tc-101	0.237	H	2.50E-02	2.70E-09	3.00E-09
Ru-103	39.280	D	1.00E-06	3.60E-09	4.20E-09
Ru-105	4.440	H	1.00E-06	4.50E-09	5.10E-09
Ru-106	368.200	D	1.00E-06	1.50E-09	1.80E-09
Ag-110m	249.900	D	5.00E-02	1.80E-08	2.10E-08
Sb-122	2.700	D	1.50E-03	0.00E+00	0.00E+00
Sb-124	60.200	D	1.50E-03	1.30E-08	1.50E-08
Sb-125	2.770	Y	1.50E-03	3.10E-09	3.50E-09

Table 3-2

Total Body & Skin Ground Plane Dose Factors (mrem/hr per pCi/m^2)
with Isotope half-life and Stable Element Transfer Data (Fm, cow)

				Ground Plane Dose Factors	
Isotope	Halflife	unit	Fm	TotBody(DFg)	Skin(DFs)
Te-125m	58.000	D	1.00E-03	3.50E-11	4.80E-11
Te-127m	109.000	D	1.00E-03	1.10E-12	1.30E-12
Te-127	9.350	H	1.00E-03	1.00E-11	1.10E-11
Te-129m	33.600	D	1.00E-03	7.70E-10	9.00E-10
Te-129	1.160	H	1.00E-03	7.10E-10	8.40E-10
Te-131m	30.000	H	1.00E-03	8.40E-09	9.90E-09
Te-131	0.417	H	1.00E-03	2.20E-09	2.60E-06
Te-132	3.258	D	1.00E-03	1.70E-09	2.00E-09
I-130	12.360	H	6.00E-03	1.40E-08	1.70E-08
I-131	8.040	D	6.00E-03	2.80E-09	3.40E-09
I-132	2.300	H	6.00E-03	1.70E-08	2.00E-08
I-133	20.800	H	6.00E-03	3.70E-09	4.50E-09
I-134	0.877	H	6.00E-03	1.60E-08	1.90E-08
I-135	6.610	H	6.00E-03	1.20E-08	1.40E-08
Cs-134	2.062	Y	1.20E-02	1.20E-08	1.40E-08
Cs-136	13.100	D	1.20E-02	1.50E-08	1.70E-08
Cs-137	30.000	Y	1.20E-02	4.20E-09	4.90E-09
Cs-138	0.537	H	1.20E-02	2.10E-08	2.40E-08
Ba-139	1 378	H	4.00E-04	2.40E-09	2.70E-09
Ba-140	12.740	D	4.00E-04	2.10E-09	2.40E-09
Ba-141	0.304	H	4.00E-04	4.30E-09	4.90E-09
Ba-142	0.177	H	4.00E-04	7.90E-09	9.00E-09
La-140	1.678	D	5.00E-06	1.[illegible]0E-08	1.70E-08
La-142	1.542	H	5.00E-06	1.50E-08	1.80E-08
Ce-141	32.501	D	1.00E-04	5.50E-10	6.20E-10
Ce-143	33.000	H	1.00E-04	2.20E-09	2.50E-09
Ce-144	284.300	D	1.00E-04	3.20E-10	3.70E-10
Pr-143	13.560	D	5.00E-06	0.00E+00	0.00E+00
Pr-144	0.288	H	5.00E-06	2.00E-10	2.30E-10
Nd-147	10.980	D	5.00E-06	1.00E-09	1.20E-09
W-187	23.900	H	5.00E-04	3.10E-09	3.60E-09
Np-239	2.360	D	5.00E-06	9.50E-10	1.10E-09
K-40	1.28E+09	Y	1.00E-02	0.00E+00	0.00E+00
Co-57	270.900	D	1.00E-03	9.10E-10	1.00E-09
Sr-85	64.840	D	8.00E-04	0.00E+00	0.00E+00
Y-88	106.640	D	1.00E-05	0.00E+00	0.00E+00
Nb-94	2.03E+04	Y	2.50E-03	0.00E+00	0.00E+00
Nb-97	1.202	H	2.50E-03	4.60E-09	5.40E-09
Cd-109	1.271	Y	1.20E-04	0.00E+00	0.00E+00
Sn-113	115.100	D	2.50E-03	0.00E+00	0.00E+00
Ba-133	10.740	Y	4.00E-04	0.00E+00	0.00E+00
Te-134	0.697	H	1.00E-03	1.00E-09	1.20E-09
Ce-139	137.660	D	1.00E-04	0.00E+00	0.00E+00
Hg-203	46.600	D	3.80E-02	0.00E+00	0.00E+00

Table 3-3a

ADULT INGESTION DOSE FACTORS

(mrem per pCi ingested)

Isotope	BONE	LIVER	TOT BODY	THYROID	KIDNEY	LUNG	GILLI
H-3	0.00E+00	1.05E-07	1.05E-07	1.05E-07	1.05E-07	1.05E-07	1.05E-07
Be-7	2.77E-09	6.26E-09	3.10E-09	0.00E+00	6.58E-09	0.00E+00	1.08E-06
Na-24	1.70E-06	1.70E-06	1.70E-06	1.70E-06	1.70E-06	1.70E-06	1.70E-06
P-32	1.93E-04	1.20E-05	7.46E-06	0.00E+00	0.00E+00	0.00E+00	2.17E-05
Cr-51	0.00E+00	0.00E+00	2.66E-09	1.59E-09	5.86E-10	3.53E-09	6.69E-07
Mn-54	0.00E+00	4.57E-06	8.72E-07	0.00E+00	1.36E-06	0.00E+00	1.40E-05
Mn-56	0.00E+00	1.15E-07	2.04E-08	0.00E+00	1.46E-07	0.00E+00	3.67E-06
Fe-55	2.75E-06	1.90E-06	4.43E-07	0.00E+00	0.00E+00	1.06E-06	1.09E-06
Fe-59	4.34E-06	1.02E-05	3.91E-06	0.00E+00	0.00E+00	2.85E-06	3.40E-05
Co-58	0.00E+00	7.45E-07	1.67E-06	0.00E+00	0.00E+00	0.00E+00	1.51E-05
Co-60	0.00E+00	2.14E-06	4.72E-06	0.00E+00	0.00E+00	0.00E+00	4.02E-05
Ni-63	1.30E-04	9.01E-06	4.36E-06	0.00E+00	0.00E+00	0.00E+00	1.88E-06
Ni-65	5.28E-07	6.86E-08	3.13E-08	0.00E+00	0.00E+00	0.00E+00	1.74E-06
Cu-64	0.00E+00	8.33E-08	3.91E-08	0.00E+00	2.10E-07	0.00E+00	7.10E-06
Zn-65	4.84E-06	1.54E-05	6.96E-06	0.00E+00	1.03E-05	0.00E+00	9.70E-06
Zn-69	1.03E-08	1.97E-08	1.37E-09	0.00E+00	1.28E-08	0.00E+00	2.96E-09
Br-83	0.00E+00	0.00E+00	4.02E-08	0.00E+00	0.00E+00	0.00E+00	5.79E-08
Br-84	0.00E+00	0.00E+00	5.21E-08	0.00E+00	0.00E+00	0.00E+00	4.09E-13
Br-85	0.00E+00	0.00E+00	2.14E-09	0.00E+00	0.00E+00	0.00E+00	0.00E+00
Rb-86	0.00E+00	2.11E-05	9.83E-06	0.00E+00	0.00E+00	0.00E+00	4.16E-06
Rb-88	0.00E+00	6.05E-08	3.21E-08	0.00E+00	0.00E+00	0.00E+00	8.36E-19
Rb-89	0.00E+00	4.01E-08	2.82E-08	0.00E+00	0.00E+00	0.00E+00	2.33E-21
Sr-89	3.08E-04	0.00E+00	8.84E-06	0.00E+00	0.00E+00	0.00E+00	4.94E-05
Sr-90	7.58E-03	0.00E+00	1.86E-03	0.00E+00	0.00E+00	0.00E+00	2.19E-04
Sr-91	5.67E-06	0.00E+00	2.29E-07	0.00E+00	0.00E+00	0.00E+00	2.70E-05
Sr-92	2.15E-06	0.00E+00	9.30E-08	0.00E+00	0.00E+00	0.00E+00	4.26E-05
Y-90	9.62E-09	0.00E+00	2.58E-10	0.00E+00	0.00E+00	0.00E+00	1.02E-04
Y-91m	9.09E-11	0.00E+00	3.52E-12	0.00E+00	0.00E+00	0.00E+00	2.67E-10
Y-91	1.41E-07	0.00E+00	3.77E-09	0.00E+00	0.00E+00	0.00E+00	7.76E-05
Y-92	8.45E-10	0.00E+00	2.47E-11	0.00E+00	0.00E+00	0.00E+00	1.48E-05
Y-93	2.68E-09	0.00E+00	7.40E-11	0.00E+00	0.00E+00	0.00E+00	8.50E-05
Zr-95	3.04E-08	9.75E-09	6.60E-09	0.00E+00	1.53E-08	0.00E+00	3.09E-05
Zr-97	1.68E-09	3.39E-10	1.55E-10	0.00E+00	5.12E-10	0.00E+00	1.05E-04
Nb-95	6.22E-09	3.46E-09	1.86E-09	0.00E+00	3.42E-09	0.00E+00	2.10E-05
Mo-99	0.00E+00	4.31E-06	8.20E-07	0.00E+00	9.76E-06	0.00E+00	9.99E-06
Tc-99m	2.47E-10	6.98E-10	8.89E-09	0.00E+00	1.06E-08	3.42E-10	4.13E-07
Tc-101	2.54E-10	3.66E-10	3.59E-09	0.00E+00	6.59E-09	1.87E-10	1.10E-21
Ru-103	1.85E-07	0.00E+00	7.97E-08	0.00E+00	7.06E-07	0.00E+00	2.16E-05
Ru-105	1.54E-08	0.00E+00	6.08E-09	0.00E+00	1.99E-07	0.00E+00	9.42E-06
Ru-106	2.75E-06	0.00E+00	3.48E-07	0.00E+00	5.31E-06	0.00E+00	1.78E-04
Ag-110m	1.60E-07	1.48E-07	8.79E-08	0.00E+00	2.91E-07	0.00E+00	6.04E-05
Sb-122	2.00E-07	4.60E-09	6.90E-08	3.10E-09	0.00E+00	1.20E-07	7.60E-05
Sb-124	2.80E-06	5.30E-08	1.10E-06	6.80E-09	0.00E+00	2.18E-06	7.95E-05
Sb-125	1.79E-06	2.00E-08	4.26E-07	1.82E-09	0.00E+00	1.38E-06	1.97E-05

Table 3-3a

ADULT INGESTION DOSE FACTORS

(mrem per pCi ingested)

Isotope	BONE	LIVER	TOT BODY	THYROID	KIDNEY	LUNG	GILLI
Te-125m	2.68E-06	9.71E-07	3.59E-07	8.06E-07	1.09E-05	0.00E+00	1.07E-05
Te-127m	6.77E-06	2.42E-06	8.25E-07	1.73E-06	2.75E-05	0.00E+00	2.27E-05
Te-127	1.10E-07	3.95E-08	2.38E-08	8.15E-08	4.48E-07	0.00E+00	8.68E-06
Te-129m	1.15E-05	4.29E-06	1.82E-06	3.95E-06	4.80E-05	0.00E+00	5.79E-05
Te-129	3.14E-08	1.18E-08	7.65E-09	2.41E-08	1.32E-07	0.00E+00	2.37E-08
Te-131m	1.73E-06	8.46E-07	7.05E-07	1.34E-06	8.57E-06	0.00E+00	8.40E-05
Te-131	1.97E-08	8.23E-09	6.22E-09	1.62E-08	8.63E-08	0.00E+00	2.79E-09
Te-132	2.52E-06	1.63E-06	1.53E-06	1.80E-06	1.57E-05	0.00E+00	7.71E-05
I-130	7.56E-07	2.23E-06	8.80E-07	1.89E-04	3.48E-06	0.00E+00	1.92E-06
I-131	4.16E-06	5.95E-06	3.41E-06	1.95E-03	1.02E-05	0.00E+00	1.57E-06
I-132	2.03E-07	5.43E-07	1.90E-07	1.90E-05	8.65E-07	0.00E+00	1.02E-07
I-133	1.42E-06	2.47E-06	7.53E-07	3.63E-04	4.31E-06	0.00E+00	2.22E-06
I-134	1.06E-07	2.88E-07	1.03E-07	4.99E-06	4.58E-07	0.00E+00	2.51E-10
I-135	4.43E-07	1.16E-06	4.28E-07	7.65E-05	1.86E-06	0.00E+00	1.31E-06
Cs-134	6.22E-05	1.48E-04	1.21E-04	0.00E+00	4.79E-05	1.59E-05	2.59E-06
Cs-136	6.51E-06	2.57E-05	1.85E-05	0.00E+00	1.43E-05	1.96E-06	2.92E-06
Cs-137	7.97E-05	1.09E-04	7.14E-05	0.00E+00	3.70E-05	1.23E-05	2.11E-06
Cs-138	5.52E-08	1.09E-07	5.40E-08	0.00E+00	8.01E-08	7.91E-09	4.65E-13
Ba-139	9.70E-08	6.91E-11	2.84E-09	0.00E+00	6.46E-11	3.92E-11	1.72E-07
Ba-140	2.03E-05	2.55E-08	1.33E-06	0.00E+00	8.67E-09	1.46E-08	4.18E-05
Ba-141	4.71E-08	3.56E-11	1.59E-09	0.00E+00	3.31E-11	2.02E-11	2.22E-17
Ba-142	2.13E-08	2.19E-11	1.34E-09	0.00E+00	1.85E-11	1.24E-11	3.00E-26
La-140	2.50E-09	1.26E-09	3.33E-10	0.00E+00	0.00E+00	0.00E+00	9.25E-05
La-142	1.28E-10	5.82E-11	1.45E-11	0.00E+00	0.00E+00	0.00E+00	4.25E-07
Ce-141	9.36E-09	6.33E-09	7.18E-10	0.00E+00	2.94E-09	0.00E+00	2.42E-05
Ce-143	1.65E-09	1.22E-06	1.35E-10	0.00E+00	5.37E-10	0.00E+00	4.56E-05
Ce-144	4.88E-07	2.04E-07	2.62E-08	0.00E+00	1.21E-07	0.00E+00	1.65E-04
Pr-143	9.20E-09	3.69E-09	4.56E-10	0.00E+00	2.13E-09	0.00E+00	4.03E-05
Pr-144	3.01E-11	1.25E-11	1.53E-12	0.00E+00	7.05E-12	0.00E+00	4.33E-18
Nd-147	6.29E-09	7.27E-09	4.35E-10	0.00E+00	4.25E-09	0.00E+00	3.49E-05
W-187	1.03E-07	8.61E-08	3.01E-08	0.00E+00	0.00E+00	0.00E+00	2.82E-05
Np-239	1.19E-09	1.17E-10	6.45E-11	0.00E+00	3.65E-10	0.00E+00	2.40E-05
K-40	0.00E+00	0.00E+00	0.00E+00	0.00E+00	0.00E+00	0.00E+00	0.00E+00
Co-57	0.00E+00	1.75E-07	2.91E-07	0.00E+00	0.00E+00	0.00E+00	4.44E-06
Sr-85	0.00E+00	0.00E+00	0.00E+00	0.00E+00	0.00E+00	0.00E+00	0.00E+00
Y-88	0.00E+00	0.00E+00	0.00E+00	0.00E+00	0.00E+00	0.00E+00	0.00E+00
Nb-94	0.00E+00	0.00E+00	0.00E+00	0.00E+00	0.00E+00	0.00E+00	0.00E+00
Nb-97	5.22E-11	1.32E-11	4.82E-12	0.00E+00	1.54E-11	0.00E+00	4.87E-08
Cd-109	0.00E+00	0.00E+00	0.00E+00	0.00E+00	0.00E+00	0.00E+00	0.00E+00
Sn-113	0.00E+00	0.00E+00	0.00E+00	0.00E+00	0.00E+00	0.00E+00	0.00E+00
Ba-133	0.00E+00	0.00E+00	0.00E+00	0.00E+00	0.00E+00	0.00E+00	0.00E+00
Te-134	3.24E-08	2.12E-08	1.30E-08	2.83E-08	2.05E-07	0.00E+00	3.59E-11
Ce-139	0.00E+00	0.00E+00	0.00E+00	0.00E+00	0.00E+00	0.00E+00	0.00E+00
Hg-203	0.00E+00	0.00E+00	0.00E+00	0.00E+00	0.00E+00	0.00E+00	0.00E+00

Table 3-3b

TEEN INGESTION DOSE FACTORS

(mrem per pCi ingested)

Isotope	BONE	LIVER	TOT BODY	THYROID	KIDNEY	LUNG	GILLI
H-3	0.00E+00	1.06E-07	1.06E-07	1.06E-07	1.06E-07	1.06E-07	1.06E-07
Be-7	3.96E-09	8.87E-09	4.43E-09	0.00E+00	9.40E-09	0.00E+00	1.08E-06
Na-24	2.30E-06	2.30E-06	2.30E-06	2.30E-06	2.30E-06	2.30E-06	2.30E-06
P-32	2.76E-04	1.71E-05	1.07E-05	0.00E+00	0.00E+00	0.00E+00	2.32E-05
Cr-51	0.00E+00	0.00E+00	3.60E-09	2.00E-09	7.89E-10	5.14E-09	6.05E-07
Mn-54	0.00E+00	5.90E-06	1.17E-06	0.00E+00	1.76E-06	0.00E+00	1.21E-05
Mn-56	0.00E+00	1.58E-07	2.81E-08	0.00E+00	2.00E-07	0.00E+00	1.04E-05
Fe-55	3.78E-06	2.68E-06	6.25E-07	0.00E+00	0.00E+00	1.70E-06	1.16E-06
Fe-59	5.87E-06	1.37E-05	5.29E-06	0.00E+00	0.00E+00	4.32E-06	3.24E-05
Co-58	0.00E+00	9.72E-07	2.24E-06	0.00E+00	0.00E+00	0.00E+00	1.34E-05
Co-60	0.00E+00	2.81E-06	6.33E-06	0.00E+00	0.00E+00	0.00E+00	3.66E-05
Ni-63	1.77E-04	1.25E-05	6.00E-06	0.00E+00	0.00E+00	0.00E+00	1.99E-06
Ni-65	7.49E-07	9.57E-08	4.36E-08	0.00E+00	0.00E+00	0.00E+00	5.19E-06
Cu-64	0.00E+00	1.15E-07	5.41E-08	0.00E+00	2.91E-07	0.00E+00	8.92E-06
Zn-65	5.76E-06	2.00E-05	9.33E-06	0.00E+00	1.28E-05	0.00E+00	8.47E-06
Zn-69	1.47E-08	2.80E-08	1.96E-09	0.00E+00	1.83E-08	0.00E+00	5.16E-08
Br-83	0.00E+00	0.00E+00	5.74E-08	0.00E+00	0.00E+00	0.00E+00	0.00E+00
Br-84	0.00E+00	0.00E+00	7.22E-08	0.00E+00	0.00E+00	0.00E+00	0.00E+00
Br-85	0.00E+00	0.00E+00	3.05E-09	0.00E+00	0.00E+00	0.00E+00	0.00E+00
Rb-86	0.00E+00	2.98E-05	1.40E-05	0.00E+00	0.00E+00	0.00E+00	4.41E-06
Rb-88	0.00E+00	8.52E-08	4.54E-08	0.00E+00	0.00E+00	0.00E+00	7.30E-15
Rb-89	0.00E+00	5.50E-08	3.89E-08	0.00E+00	0.00E+00	0.00E+00	8.43E-17
Sr-89	4.40E-04	0.00E+00	1.26E-05	0.00E+00	0.00E+00	0.00E+00	5.24E-05
Sr-90	8.30E-03	0.00E+00	2.05E-03	0.00E+00	0.00E+00	0.00E+00	2.33E-04
Sr-91	8.07E-06	0.00E+00	3.21E-07	0.00E+00	0.00E+00	0.00E+00	3.66E-05
Sr-92	3.05E-06	0.00E+00	1.30E-07	0.00E+00	0.00E+00	0.00E+00	7.77E-05
Y-90	1.37E-08	0.00E+00	3.69E-10	0.00E+00	0.00E+00	0.00E+00	1.13E-04
Y-91m	1.29E-10	0.00E+00	4.93E-12	0.00E+00	0.00E+00	0.00E+00	6.09E-09
Y-91	2.01E-07	0.00E+00	5.39E-09	0.00E+00	0.00E+00	0.00E+00	8.24E-05
Y-92	1.21E-09	0.00E+00	3.50E-11	0.00E+00	0.00E+00	0.00E+00	3.32E-05
Y-93	3.83E-09	0.00E+00	1.05E-10	0.00E+00	0.00E+00	0.00E+00	1.17E-04
Zr-95	4.12E-08	1.30E-08	8.94E-09	0.00E+00	1.91E-08	0.00E+00	3.00E-05
Zr-97	2.37E-09	4.69E-10	2.16E-10	0.00E+00	7.11E-10	0.00E+00	1.27E-04
Nb-95	8.22E-09	4.56E-09	2.51E-09	0.00E+00	4.42E-09	0.00E+00	1.95E-05
Mo-99	0.00E+00	6.03E-06	1.15E-06	0.00E+00	1.38E-05	0.00E+00	1.08E-05
Tc-99m	3.32E-10	9.26E-10	1.20E-08	0.00E+00	1.38E-08	5.14E-10	6.08E-07
Tc-101	3.60E-10	5.12E-10	5.03E-09	0.00E+00	9.26E-09	3.12E-10	8.75E-17
Ru-103	2.55E-07	0.00E+00	1.09E-07	0.00E+00	8.99E-07	0.00E+00	2.13E-05
Ru-105	2.18E-08	0.00E+00	8.46E-09	0.00E+00	2.75E-07	0.00E+00	1.76E-05
Ru-106	3.92E-06	0.00E+00	4.94E-07	0.00E+00	7.56E-06	0.00E+00	1.88E-04
Ag-110m	2.05E-07	1.94E-07	1.18E-07	0.00E+00	3.70E-07	0.00E+00	5.45E-05
Sb-122	3.30E-07	6.42E-09	9.64E-08	4.19E-09	0.00E+00	2.06E-07	6.92E-05
Sb-124	3.86E-06	7.12E-08	1.51E-06	8.79E-09	0.00E+00	3.37E-06	7.81E-05
Sb-125	2.48E-06	2.71E-08	5.79E-07	2.36E-09	0.00E+00	2.16E-06	1.92E-05

Table 3-3b

TEEN INGESTION DOSE FACTORS

(mrem per pCi ingested)

Isotope	BONE	LIVER	TOT BODY	THYROID	KIDNEY	LUNG	GILLI
Te-125m	3.83E-06	1.38E-06	5.12E-07	1.07E-06	0.00E+00	0.00E+00	1.13E-05
Te-127m	9.67E-06	3.43E-06	1.15E-06	2.30E-06	3.92E-05	0.00E+00	2.41E-05
Te-127	1.58E-07	5.60E-08	3.40E-08	1.09E-07	6.40E-07	0.00E+00	1.22E-05
Te-129m	1.63E-05	6.05E-06	2.58E-06	5.26E-06	6.82E-05	0.00E+00	6.12E-05
Te-129	4.48E-08	1.67E-08	1.09E-08	3.20E-08	1.88E-07	0.00E+00	2.45E-07
Te-131m	2.44E-06	1.17E-06	9.76E-07	1.76E-06	1.22E-05	0.00E+00	9.39E-05
Te-131	2.79E-08	1.15E-08	8.72E-09	2.15E-08	1.22E-07	0.00E+00	2.29E-09
Te-132	3.49E-06	2.21E-06	2.08E-06	2.33E-06	2.12E-05	0.00E+00	7.00E-05
I-130	1.03E-06	2.98E-06	1.19E-06	2.43E-04	4.59E-06	0.00E+00	2.29E-06
I-131	5.85E-06	8.19E-06	4.40E-06	2.39E-03	1.41E-05	0.00E+00	1.62E-06
I-132	2.79E-07	7.30E-07	2.62E-07	2.46E-05	1.15E-06	0.00E+00	3.18E-07
I-133	2.01E-06	3.41E-06	1.04E-06	4.76E-04	5.98E-06	0.00E+00	2.58E-06
I-134	1.46E-07	3.87E-07	1.39E-07	6.45E-06	6.10E-07	0.00E+00	5.10E-09
I-135	6.10E-07	1.57E-06	5.82E-07	1.01E-04	2.48E-06	0.00E+00	1.74E-06
Cs-134	8.37E-05	1.97E-04	9.14E-05	0.00E+00	6.26E-05	2.39E-05	2.45E-06
Cs-136	8.59E-06	3.38E-05	2.27E-05	0.00E+00	1.84E-05	2.90E-06	2.72E-06
Cs-137	1.12E-04	1.49E-04	5.19E-05	0.00E+00	5.07E-05	1.97E-05	2.12E-06
Cs-138	7.76E-08	1.49E-07	7.45E-08	0.00E+00	1.10E-07	1.28E-08	6.76E-11
Ba-139	1.39E-07	9.78E-11	4.05E-09	0.00E+00	9.22E-11	6.74E-11	1.24E-06
Ba-140	2.84E-05	3.48E-08	1.83E-06	0.00E+00	1.18E-08	2.34E-08	4.38E-05
Ba-141	6.71E-08	5.01E-11	2.24E-09	0.00E+00	4.65E-11	3.43E-11	1.43E-13
Ba-142	2.99E-08	2.99E-11	1.84E-09	0.00E+00	2.53E-11	1.99E-11	9.18E-20
La-140	3.48E-09	1.71E-09	4.55E-10	0.00E+00	0.00E+00	0.00E+00	9.82E-05
La-142	1.79E-10	7.95E-11	1.98E-11	0.00E+00	0.00E+00	0.00E+00	2.42E-06
Ce-141	1.33E-08	8.88E-09	1.02E-09	0.00E+00	4.18E-09	0.00E+00	2.54E-05
Ce-143	2.35E-09	1.71E-06	1.91E-10	0.00E+00	7.67E-10	0.00E+00	5.14E-05
Ce-144	6.96E-07	2.88E-07	3.74E-08	0.00E+00	1.72E-07	0.00E+00	1.75E-04
Pr-143	1.31E-08	5.23E-09	6.52E-10	0.00E+00	3.04E-09	0.00E+00	4.31E-05
Pr-144	4.30E-11	1.76E-11	2.18E-12	0.00E+00	1.01E-11	0.00E+00	4.74E-14
Nd-147	9.38E-09	1.02E-08	6.11E-10	0.00E+00	5.99E-09	0.00E+00	3.68E-05
W-187	1.46E-07	1.19E-07	4.17E-08	0.00E+00	0.00E+00	0.00E+00	3.22E-05
Np-239	1.76E-09	1.66E-10	9.22E-11	0.00E+00	5.21E-10	0.00E+00	2.67E-05
K-40	0.00E+00	0.00E+00	0.00E+00	0.00E+00	0.00E+00	0.00E+00	0.00E+00
Co-57	0.00E+00	2.38E-07	3.99E-07	0.00E+00	0.00E+00	0.00E+00	4.44E-06
Sr-85	0.00E+00	0.00E+00	0.00E+00	0.00E+00	0.00E+00	0.00E+00	0.00E+00
Y-88	0.00E+00	0.00E+00	0.00E+00	0.00E+00	0.00E+00	0.00E+00	0.00E+00
Nb-94	0.00E+00	0.00E+00	0.00E+00	0.00E+00	0.00E+00	0.00E+00	0.00E+00
Nb-97	7.37E-11	1.83E-11	6.68E-12	0.00E+00	2.14E-11	0.00E+00	4.37E-07
Cd-109	0.00E+00	0.00E+00	0.00E+00	0.00E+00	0.00E+00	0.00E+00	0.00E+00
Sn-113	0.00E+00	0.00E+00	0.00E+00	0.00E+00	0.00E+00	0.00E+00	0.00E+00
Ba-133	0.00E+00	0.00E+00	0.00E+00	0.00E+00	0.00E+00	0.00E+00	0.00E+00
Te-134	4.47E-08	2.87E-08	3.00E-08	3.67E-08	2.74E-07	0.00E+00	1.66E-09
Ce-139	0.00E+00	0.00E+00	0.00E+00	0.00E+00	0.00E+00	0.00E+00	0.00E+00
Hg-203	0.00E+00	0.00E+00	0.00E+00	0.00E+00	0.00E+00	0.00E+00	0.00E+00

Table 3-3c

CHILD INGESTION DOSE FACTORS

(mrem per pCi ingested)

Isotope	BONE	LIVER	TOT BODY	THYROID	KIDNEY	LUNG	GILLI
H-3	0.00E+00	2.03E-07	2.03E-07	2.03E-07	2.03E-07	2.03E-07	2.03E-07
Be-7	1.18E-08	2.00E-08	1.32E-08	0.00E+00	1.97E-08	0.00E+00	1.12E-06
Na-24	5.80E-06	5.80E-06	5.80E-06	5.80E-06	5.80E-06	5.80E-06	5.80E-06
P-32	8.25E-04	3.86E-05	3.18E-05	0.00E+00	0.00E+00	0.00E+00	2.28E-05
Cr-51	0.00E+00	0.00E+00	8.90E-09	4.94E-09	1.35E-09	9.02E-09	4.72E-07
Mn-54	0.00E+00	1.07E-05	2.85E-06	0.00E+00	3.00E-06	0.00E+00	8.98E-06
Mn-56	0.00E+00	3.34E-07	7.54E-08	0.00E+00	4.04E-07	0.00E+00	4.84E-05
Fe-55	1.15E-05	6.10E-06	1.89E-06	0.00E+00	0.00E+00	3.45E-06	1.13E-06
Fe-59	1.65E-05	2.67E-05	1.33E-05	0.00E+00	0.00E+00	7.74E-06	2.78E-05
Co-58	0.00E+00	1.80E-06	5.51E-06	0.00E+00	0.00E+00	0.00E+00	1.05E-05
Co-60	0.00E+00	5.29E-06	1.56E-05	0.00E+00	0.00E+00	0.00E+00	2.93E-05
Ni-63	5.38E-04	2.88E-05	1.83E-05	0.00E+00	0.00E+00	0.00E+00	1.94E-06
Ni-65	2.22E-06	2.09E-07	1.22E-07	0.00E+00	0.00E+00	0.00E+00	2.56E-05
Cu-64	0.00E+00	2.45E-07	1.48E-07	0.00E+00	5.92E-07	0.00E+00	1.15E-05
Zn-65	1.37E-05	3.65E-05	2.27E-05	0.00E+00	2.30E-05	0.00E+00	6.41E-06
Zn-69	4.38E-08	6.33E-08	5.85E-09	0.00E+00	3.84E-08	0.00E+00	3.99E-06
Br-83	0.00E+00	0.00E+00	1.71E-07	0.00E+00	0.00E+00	0.00E+00	0.00E+00
Br-84	0.00E+00	0.00E+00	1.98E-07	0.00E+00	0.00E+00	0.00E+00	0.00E+00
Br-85	0.00E+00	0.00E+00	9.12E-09	0.00E+00	0.00E+00	0.00E+00	0.00E+00
Rb-86	0.00E+00	6.70E-05	4.12E-05	0.00E+00	0.00E+00	0.00E+00	4.31E-06
Rb-88	0.00E+00	1.90E-07	1.32E-07	0.00E+00	0.00E+00	0.00E+00	9.32E-09
Rb-89	0.00E+00	1.17E-07	1.04E-07	0.00E+00	0.00E+00	0.00E+00	1.02E-09
Sr-89	1.32E-03	0.00E+00	3.77E-05	0.00E+00	0.00E+00	0.00E+00	5.11E-05
Sr-90	1.70E-02	0.00E+00	4.31E-03	0.00E+00	0.00E+00	0.00E+00	2.29E-04
Sr-91	2.40E-05	0.00E+00	9.06E-07	0.00E+00	0.00E+00	0.00E+00	5.30E-05
Sr-92	9.03E-06	0.00E+00	3.62E-07	0.00E+00	0.00E+00	0.00E+00	1.71E-04
Y-90	4.11E-08	0.00E+00	1.10E-09	0.00E+00	0.00E+00	0.00E+00	1.17E-04
Y-91m	3.82E-10	0.00E+00	1.39E-11	0.00E+00	0.00E+00	0.00E+00	7.48E-07
Y-91	6.02E-07	0.00E+00	1.61E-08	0.00E+00	0.00E+00	0.00E+00	8.02E-05
Y-92	3.60E-09	0.00E+00	1.03E-10	0.00E+00	0.00E+00	0.00E+00	1.04E-04
Y-93	1.14E-08	0.00E+00	3.13E-10	0.00E+00	0.00E+00	0.00E+00	1.70E-04
Zr-95	1.16E-07	2.55E-08	2.27E-08	0.00E+00	3.65E-08	0.00E+00	2.66E-05
Zr-97	6.99E-09	1.01E-09	5.96E-10	0.00E+00	1.45E-09	0.00E+00	1.53E-04
Nb-95	2.25E-08	8.76E-09	6.26E-09	0.00E+00	8.23E-09	0.00E+00	1.62E-05
Mo-99	0.00E+00	1.33E-05	3.29E-06	0.00E+00	2.84E-05	0.00E+00	1.10E-05
Tc-99m	9.23E-10	1.81E-09	3.00E-08	0.00E+00	2.63E-08	9.19E-10	1.03E-06
Tc-101	1.07E-09	1.12E-09	1.42E-08	0.00E+00	1.91E-08	5.92E-10	3.56E-09
Ru-103	7.31E-07	0.00E+00	2.81E-07	0.00E+00	1.84E-06	0.00E+00	1.89E-05
Ru-105	6.45E-08	0.00E+00	2.34E-08	0.00E+00	5.67E-07	0.00E+00	4.21E-05
Ru-106	1.17E-05	0.00E+00	1.46E-06	0.00E+00	1.58E-05	0.00E+00	1.82E-04
Ag-110m	5.39E-07	3.64E-07	2.91E-07	0.00E+00	6.78E-07	0.00E+00	4.33E-05
Sb-122	9.83E-07	1.45E-08	2.88E-07	1.26E-08	0.00E+00	4.00E-07	7.56E-05
Sb-124	1.11E-05	1.44E-07	3.88E-06	2.44E-08	0.00E+00	6.15E-06	6.93E-05
Sb-125	7.15E-06	5.51E-08	1.50E-06	6.63E-09	0.00E+00	3.98E-06	1.71E-05

Table 3-3c

CHILD INGESTION DOSE FACTORS

(mrem per pCi ingested)

Isotope	BONE	LIVER	TOT BODY	THYROID	KIDNEY	LUNG	GILLI
Te-125m	1.14E-05	3.09E-06	1.52E-06	3.20E-06	0.00E+00	0.00E+00	1.10E-05
Te-127m	2.89E-05	7.78E-06	3.43E-06	6.91E-06	8.24E-05	0.00E+00	2.34E-05
Te-127	4.71E-07	1.27E-07	1.01E-07	3.26E-07	1.34E-06	0.00E+00	1.84E-05
Te-129m	4.87E-05	1.36E-05	7.56E-06	1.57E-05	1.43E-04	0.00E+00	5.94E-05
Te-129	1.34E-07	3.74E-08	3.18E-08	9.56E-08	3.92E-07	0.00E+00	8.34E-06
Te-131m	7.20E-06	2.49E-06	2.65E-06	5.12E-06	2.41E-05	0.00E+00	1.01E-04
Te-131	8.30E-08	2.53E-08	2.47E-08	6.35E-08	2.51E-07	0.00E+00	4.36E-07
Te-132	1.01E-05	4.47E-06	5.40E-06	6.51E-06	4.15E-05	0.00E+00	4.50E-05
I-130	2.92E-06	5.20E-06	3.04E-06	6.50E-04	8.82E-06	0.00E+00	2.76E-06
I-131	1.72E-05	1.73E-05	9.83E-06	5.72E-03	2.84E-05	0.00E+00	1.54E-06
I-132	8.00E-07	1.47E-06	6.76E-07	6.82E-05	2.25E-06	0.00E+00	1.73E-06
I-133	5.92E-06	7.32E-06	2.77E-06	1.36E-03	1.22E-05	0.00E+00	2.95E-06
I-134	4.19E-07	7.78E-07	3.58E-07	1.79E-05	1.19E-06	0.00E+00	5.16E-07
I-135	1.75E-06	3.15E-06	1.49E-06	2.79E-04	4.83E-06	0.00E+00	2.40E-06
Cs-134	2.34E-04	3.84E-04	8.10E-05	0.00E+00	1.19E-04	4.27E-05	2.07E-06
Cs-136	2.35E-05	6.46E-05	4.18E-05	0.00E+00	3.44E-05	5.13E-06	2.27E-06
Cs-137	3.27E-04	3.13E-04	4.62E-05	0.00E+00	1.02E-04	3.67E-05	1.96E-06
Cs-138	2.28E-07	3.17E-07	2.01E-07	0.00E+00	2.23E-07	2.40E-08	1.46E-07
Ba-139	4.14E-07	2.21E-10	1.20E-08	0.00E+00	1.93E-10	1.30E-10	2.39E-05
Ba-140	8.31E-05	7.28E-08	4.85E-06	0.00E+00	2.37E-08	4.34E-08	4.21E-05
Ba-141	2.00E-07	1.12E-10	6.51E-09	0.00E+00	9.69E-11	6.58E-10	1.14E-07
Ba-142	8.74E-08	6.29E-11	4.88E-09	0.00E+00	5.09E-11	3.70E-11	1.14E-09
La-140	1.01E-08	3.53E-09	1.19E-09	0.00E+00	0.00E+00	0.00E+00	9.84E-05
La-142	5.24E-10	1.67E-10	5.23E-11	0.00E+00	0.00E+00	0.00E+00	3.31E-05
Ce-141	3.97E-08	1.98E-08	2.94E-09	0.00E+00	8.68E-09	0.00E+00	2.47E-05
Ce-143	6.99E-09	3.79E-06	5.49E-10	0.00E+00	1.59E-09	0.00E+00	5.55E-05
Ce-144	2.08E-06	6.52E-07	1.11E-07	0.00E+00	3.61E-07	0.00E+00	1.70E-04
Pr-143	3.93E-08	1.18E-03	1.95E-09	0.00E+00	6.3[illegible]E-09	0.00E+00	4.24E-05
Pr-144	1.29E-10	3.99E-11	6.49E-12	0.00E+00	2.11E-11	0.00E+00	8.59E-08
Nd-147	2.79E-08	2.26E-08	1.75E-09	0.00E+00	1.24E-08	0.00E+00	3.58E-05
W-187	4.29E-07	2.54E-07	1.14E-07	0.00E+00	0.00E+00	0.00E+00	3.57E-05
Np-239	5.25E-09	3.77E-10	2.65E-10	0.00E+00	1.09E-09	0.00E+00	2.79E-05
K-40	0.00E+00	0.00E+00	0.00E+00	0.00E+00	0.00E+00	0.00E+00	0.00E+00
Co-57	0.00E+00	4.93E-07	9.98E-07	0.00E+00	0.00E+00	0.00E+00	4.04E-06
Sr-85	0.00E+00	0.00E+00	0.00E+00	0.00E+00	0.00E+00	0.00E+00	0.00E+00
Y-88	0.00E+00	0.00E+00	0.00E+00	0.00E+00	0.00E+00	0.00E+00	0.00E+00
Nb-94	0.00E+00	0.00E+00	0.00E+00	0.00E+00	0.00E+00	0.00E+00	0.00E+00
Nb-97	2.17E-10	3.92E-11	1.83E-11	0.00E+00	4.35E-11	0.00E+00	1.21E-05
Cd-109	0.00E+00	0.00E+00	0.00E+00	0.00E+00	0.00E+00	0.00E+00	0.00E+00
Sn-113	0.00E+00	0.00E+00	0.00E+00	0.00E+00	0.00E+00	0.00E+00	0.00E+00
Ba-133	0.00E+00	0.00E+00	0.00E+00	0.00E+00	0.00E+00	0.00E+00	0.00E+00
Te-134	1.29E-07	5.80E-08	7.74E-08	1.02E-07	5.37E-07	0.00E+00	5.89E-07
Ce-139	0.00E+00	0.00E+00	0.00E+00	0.00E+00	0.00E+00	0.00E+00	0.00E+00
Hg-203	0.00E+00	0.00E+00	0.00E+00	0.00E+00	0.00E+00	0.00E+00	0.00E+00

Table 3-3d

INFANT INGESTION DOSE FACTORS

(mrem per pCi ingested)

Isotope	BONE	LIVER	TOT BODY	THYROID	KIDNEY	LUNG	GILLI
H-3	0.00E+00	3.08E-07	3.08E-07	3.08E-07	3.08E-07	3.08E-07	3.08E-07
Be-7	2.26E-08	4.72E-08	2.51E-08	0.00E+00	3.34E-08	0.00E+00	1.11E-06
Na-24	1.01E-05	1.01E-05	1.01E-05	1.01E-05	1.01E-05	1.01E-05	1.01E-05
P-32	1.70E-03	1.00E-04	6.59E-05	0.00E+00	0.00E+00	0.00E+00	2.30E-05
Cr-51	0.00E+00	0.00E+00	1.41E-08	9.20E-09	2.01E-09	1.79E-08	4.11E-07
Mn-54	0.00E+00	1.99E-05	4.51E-06	0.00E+00	4.41E-06	0.00E+00	7.31E-06
Mn-56	0.00E+00	8.18E-07	1.41E-07	0.00E+00	7.03E-07	0.00E+00	7.43E-05
Fe-55	1.39E-05	8.98E-06	2.40E-06	0.00E+00	0.00E+00	4.39E-06	1.14E-06
Fe-59	3.08E-05	5.38E-05	2.12E-05	0.00E+00	0.00E+00	1.59E-05	2.57E-05
Co-58	0.00E+00	3.60E-06	8.98E-06	0.00E+00	0.00E+00	0.00E+00	8.97E-06
Co-60	0.00E+00	1.08E-05	2.55E-05	0.00E+00	0.00E+00	0.00E+00	2.57E-05
Ni-63	6.34E-04	3.92E-05	2.20E-05	0.00E+00	0.00E+00	0.00E+00	1.95E-06
Ni-65	4.70E-06	5.32E-07	2.42E-07	0.00E+00	0.00E+00	0.00E+00	4.05E-05
Cu-64	0.00E+00	6.09E-07	2.82E-07	0.00E+00	1.03E-06	0.00E+00	1.25E-05
Zn-65	1.84E-05	6.31E-05	2.91E-05	0.00E+00	3.06E-05	0.00E+00	5.33E-05
Zn-69	9.33E-08	1.68E-07	1.25E-08	0.00E+00	6.98E-08	0.00E+00	1.37E-05
Br-83	0.00E+00	0.00E+00	3.63E-07	0.00E+00	0.00E+00	0.00E+00	0.00E+00
Br-84	0.00E+00	0.00E+00	3.82E-07	0.00E+00	0.00E+00	0.00E+00	0.00E+00
Br-85	0.00E+00	0.00E+00	1.94E-08	0.00E+00	0.00E+00	0.00E+00	0.00E+00
Rb-86	0.00E+00	1.70E-04	8.40E-05	0.00E+00	0.00E+00	0.00E+00	4.35E-06
Rb-88	0.00E+00	4.98E-07	2.73E-07	0.00E+00	0.00E+00	0.00E+00	4.85E-07
Rb-89	0.00E+00	2.86E-07	1.97E-07	0.00E+00	0.00E+00	0.00E+00	9.74E-08
Sr-89	2.51E-03	0.00E+00	7.20E-05	0.00E+00	0.00E+00	0.00E+00	5.16E-05
Sr-90	1.85E-02	0.00E+00	4.71E-03	0.00E+00	0.00E+00	0.00E+00	2.31E-04
Sr-91	5.00E-05	0.00E+00	1.81E-06	0.00E+00	0.00E+00	0.00E+00	5.92E-05
Sr-92	1.92E-05	0.00E+00	7.13E-07	0.00E+00	0.00E+00	0.00E+00	2.07E-04
Y-90	8.69E-08	0.00E+00	2.33E-09	0.00E+00	0.00E+00	0.00E+00	1.20E-04
Y-90m	8.10E-10	0.00E+00	2.76E-11	0.00E+00	0.00E+00	0.00E+00	2.70E-06
Y-91	1.13E-06	0.00E+00	3.01E-08	0.00E+00	0.00E+00	0.00E+00	8.10E-05
Y-92	7.65E-09	0.00E+00	2.15E-10	0.00E+00	0.00E+00	0.00E+00	1.46E-04
Y-93	2.43E-08	0.00E+00	6.62E-10	0.00E+00	0.00E+00	0.00E+00	1.92E-04
Zr-95	2.06E-07	5.02E-08	3.56E-08	0.00E+00	5.41E-08	0.00E+00	2.50E-05
Zr-97	1.48E-08	2.54E-09	1.16E-09	0.00E+00	2.56E-09	0.00E+00	1.62E-04
Nb-95	4.20E-08	1.73E-08	1.00E-08	0.00E+00	1.24E-08	0.00E+00	1.46E-05
Mo-99	0.00E+00	3.40E-05	6.63E-06	0.00E+00	5.08E-05	0.00E+00	1.12E-05
Tc-99m	1.92E-09	3.96E-09	5.10E-08	0.00E+00	4.26E-08	2.07E-09	1.15E-06
Tc-101	2.27E-09	2.86E-09	2.83E-08	0.00E+00	3.40E-08	1.56E-09	4.86E-07
Ru-103	1.48E-06	0.00E+00	4.95E-07	0.00E+00	3.08E-06	0.00E+00	1.80E-05
Ru-105	1.36E-07	0.00E+00	4.58E-08	0.00E+00	1.00E-06	0.00E+00	5.41E-05
Ru-106	2.41E-05	0.00E+00	3.01E-06	0.00E+00	2.85E-05	0.00E+00	1.83E-04
Ag-110m	9.96E-07	7.27E-07	4.81E-07	0.00E+00	1.04E-06	0.00E+00	3.77E-05
Sb-122	2.10E-06	3.85E-08	6.13E-07	3.14E-08	0.00E+00	1.09E-06	7.65E-05
Sb-124	2.14E-05	3.15E-07	6.63E-06	5.68E-08	0.00E+00	1.34E-05	6.60E-05
Sb-125	1.23E-05	1.19E-07	2.53E-06	1.54E-08	0.00E+00	7.72E-06	1.64E-05

Table 3-3d

INFANT INGESTION DOSE FACTORS

(mrem per pCi ingested)

Isotope	BONE	LIVER	TOT BODY	THYROID	KIDNEY	LUNG	GILLI
Te-125m	2.33E-05	7.79E-06	3.15E-06	7.84E-06	0.00E+00	0.00E+00	1.11E-05
Te-127m	5.85E-05	1.94E-05	7.08E-06	1.69E-05	1.44E-04	0.00E+00	2.36E-05
Te-127	1.00E-06	3.35E-07	2.15E-07	8.14E-07	2.44E-06	0.00E+00	2.10E-05
Te-129m	1.00E-04	3.43E-05	1.54E-05	3.84E-05	2.50E-04	0.00E+00	5.97E-05
Te-129	2.84E-07	9.79E-08	6.63E-08	2.38E-07	7.07E-07	0.00E+00	2.27E-05
Te-131m	1.52E-05	6.12E-06	5.05E-06	1.24E-05	4.21E-05	0.00E+00	1.03E-04
Te-131	1.76E-07	6.50E-08	4.94E-08	1.57E-07	4.50E-07	0.00E+00	7.11E-06
Te-132	2.08E-05	1.03E-05	9.61E-06	1.52E-05	6.44E-05	0.00E+00	3.81E-05
I-130	6.00E-06	1.32E-05	5.30E-06	1.48E-03	1.45E-05	0.00E+00	2.83E-06
I-131	3.59E-05	4.23E-05	1.86E-05	1.39E-02	4.94E-05	0.00E+00	1.51E-06
I-132	1.66E-06	3.37E-06	1.20E-06	1.58E-04	3.76E-06	0.00E+00	2.73E-06
I-133	1.25E-05	1.82E-05	5.33E-06	3.31E-03	2.14E-05	0.00E+00	3.08E-06
I-134	8.69E-07	1.78E-06	6.33E-07	4.15E-05	1.99E-06	0.00E+00	1.84E-06
I-135	3.64E-06	7.24E-06	2.64E-06	6.49E-04	8.07E-06	0.00E+00	2.62E-06
Cs-134	3.77E-04	7.03E-04	7.10E-05	0.00E+00	1.81E-04	7.42E-05	1.91E-06
Cs-136	4.59E-05	1.35E-04	5.04E-05	0.00E+00	5.38E-05	1.10E-05	2.05E-06
Cs-137	5.22E-04	6.11E-04	4.33E-05	0.00E+00	1.64E-04	6.64E-05	1.91E-06
Cs-138	4.81E-07	7.82E-07	3.79E-07	0.00E+00	3.90E-07	6.09E-08	1.25E-06
Ba-139	8.81E-07	5.84E-10	2.55E-08	0.00E+00	3.51E-10	3.54E-10	5.58E-05
Ba-140	1.71E-04	1.71E-07	8.81E-06	0.00E+00	4.06E-08	1.05E-07	4.20E-05
Ba-141	4.25E-07	2.91E-10	1.34E-08	0.00E+00	1.75E-10	1.77E-10	5.19E-06
Ba-142	1.84E-07	1.53E-10	9.06E-09	0.00E+00	8.81E-11	9.26E-11	7.59E-07
La-140	2.11E-08	8.32E-09	2.14E-09	0.00E+00	0.00E+00	0.00E+00	9.77E-05
La-142	1.10E-09	4.04E-10	9.67E-11	0.00E+00	0.00E+00	0.00E+00	6.86E-05
Ce-141	7.87E-08	4.80E-08	5.65E-09	0.00E+00	1.48E-08	0.00E+00	2.48E-05
Ce-143	1.48E-08	9.82E-06	1.12E-09	0.00E+00	2.86E-09	0.00E+00	5.73E-05
Ce-144	2.98E-06	1.22E-06	1.67E-07	0.00E+00	4.93E-07	0.00E+00	1.71E-04
Pr-143	8.13E-08	3.04E-08	4.03E-09	0.00E+00	1.13E-08	0.00E+00	4.29E-05
Pr-144	2.74E-10	1.06E-10	1.38E-11	0.00E+00	3.84E-11	0.00E+00	4.93E-06
Nd-147	5.53E-08	5.68E-08	3.48E-09	0.00E+00	2.19E-08	0.00E+00	3.60E-05
W-187	9.03E-07	6.28E-07	2.17E-07	0.00E+00	0.00E+00	0.00E+00	3.69E-05
Np-239	1.11E-08	9.93E-10	5.61E-10	0.00E+00	1.98E-09	0.00E+00	2.87E-05
K-40	0.00E+00	0.00E+00	0.00E+00	0.00E+00	0.00E+00	0.00E+00	0.00E+00
Co-57	0.00E+00	1.15E-06	1.87E-06	0.00E+00	0.00E+00	0.00E+00	3.92E-06
Sr-85	0.00E+00	0.00E+00	0.00E+00	0.00E+00	0.00E+00	0.00E+00	0.00E+00
Y-88	0.00E+00	0.00E+00	0.00E+00	0.00E+00	0.00E+00	0.00E+00	0.00E+00
Nb-94	0.00E+00	0.00E+00	0.00E+00	0.00E+00	0.00E+00	0.00E+00	0.00E+00
Nb-97	0.00E+00	0.00E+00	0.00E+00	0.00E+00	0.00E+00	0.00E+00	0.00E+00
Cd-109	0.00E+00	0.00E+00	0.00E+00	0.00E+00	0.00E+00	0.00E+00	0.00E+00
Sn-113	0.00E+00	0.00E+00	0.00E+00	0.00E+00	0.00E+00	0.00E+00	0.00E+00
Ba-133	0.00E+00	0.00E+00	0.00E+00	0.00E+00	0.00E+00	0.00E+00	0.00E+00
Te-134	0.00E+00	0.00E+00	0.00E+00	0.00E+00	0.00E+00	0.00E+00	0.00E+00
Ce-139	0.00E+00	0.00E+00	0.00E+00	0.00E+00	0.00E+00	0.00E+00	0.00E+00
Hg-203	0.00E+00	0.00E+00	0.00E+00	0.00E+00	0.00E+00	0.00E+00	0.00E+00

TABLE 3-4

TOTAL BODY DOSE FACTORS

Ki

FROM NOBLE GASES (GAMMA)

NUCLIDE	Gamma TB*	X	(pCi/uCi)	X	FINITE CLOUD ** CORRECTION FACTOR	=	Ki***
Kr-83m	7.56E-08		1.00E+6		7.62E-01		5.76E-02
Kr-85m	1.17E-03		1.00E+6		6.22E-01		7.28E+02
Kr-85	1.61E-05		1.00E+6		5.31E-01		8.55E+00
Kr-87	5.92E-03		1.00E+6		4.21E-01		2.49E+03
Kr-88	1.47E-02		1.00E+6		3.90E-01		5.73E+03
Kr-89	1.66E-02		1.00E+6		4.13E-01		6.85E+03
Kr-90	1.56E-02		1.00E+6		4.49E-01		7.01E+03
Xe-131m	9.15E-05		1.00E+6		7.49E-01		6.86E+01
Xe-133m	2.51E-04		1.00E+6		7.10E-01		1.78E+02
Xe-133	2.94E-04		1.00E+6		7.62E-01		2.24E+02
Xe-135m	3.12E-03		1.00E+6		5.34E-01		1.67E+03
Xe-135	1.81E-03		1.00E+6		6.36E-01		1.15E+03
Xe-137	1.42E-03		1.00E+6		5.02E-01		7.13E+02
Xe-138	8.83E-03		1.00E+6		4.28E-01		3.78E+03
Ar-41	8.84E-03		1.00E+6		4.37E-01		3.86E+03

* From Regulatory Guide 1.109, Table B-1 (mrem/yr per pCi/m^3)

** The finite cloud correction factor is described in Section 3.6.

*** Ki (mrem/yr per uCi/m^3)

TABLE 3-5

SKIN DOSE FACTORS

Li

FROM NOBLE GASES (BETA)

NUCLIDE	Beta Skin*	X	(pCi/uCi)	=	Li**
Kr-83m	0.00E+00		1.00E+6		0.00E+00
Kr-85m	1.46E-03		1.00E+6		1.46E+03
Kr-85	1.34E-03		1.00E+6		1.34E+03
Kr-87	9.73E-03		1.00E+6		9.73E+03
Kr-88	2.37E-03		1.00E+6		2.37E+03
Kr-89	1.01E-02		1.00E+6		1.01E+04
Kr-90	7.29E-03		1.00E+6		7.29E+03
Xe-131m	4.76E-04		1.00E+6		4.76E+02
Xe-133m	9.94E-04		1.00E+6		9.94E+02
Xe-133	3.06E-04		1.00E+6		3.06E+02
Xe-135m	7.11E-04		1.00E+6		7.11E+02
Xe-135	1.86E-03		1.00E+6		1.86E+03
Xe-137	1.22E-02		1.00E+6		1.22E+04
Xe-138	4.13E-03		1.00E+6		4.13E+03
Ar-41	2.69E-03		1.00E+6		2.69E+03

* From Regulatory Guide 1.109, Table B-1 (mrem/yr per pCi/m^3)

** Li (mrem/yr per uCi/m^3)

TABLE 3-6

AIR DOSE FACTORS

Mi

FROM NOBLE GASES (GAMMA)

NUCLIDE	Gamma*	X	(pCi/uCi)	X	FINITE CLOUD ** CORRECTION FACTOR	=	Mi***
Kr-83m	1.93E-05		1.00E+6		7.62E-01		1.47E+01
Kr-85m	1.23E-03		1.00E+6		6.22E-01		7.65E+02
Kr-85	1.72E-05		1.00E+6		5.31E-01		9.13E+00
Kr-87	6.17E-03		1.00E+6		4.21E-01		2.60E+03
Kr-88	1.52E-02		1.00E+6		3.90E-01		5.93E+03
Kr-89	1.73E-02		1.00E+6		4.13E-01		7.14E+03
Kr-90	1.63E-02		1.00E+6		4.49E-01		7.33E+03
Xe-131m	1.56E-04		1.00E+6		7.49E-01		1.17E+02
Xe-133m	3.27E-04		1.00E+6		7.10E-01		2.32E+02
Xe-133	3.53E-04		1.00E+6		7.62E-01		2.69E+02
Xe-135m	3.36E-03		1.00E+6		5.34E-01		1.79E+03
Xe-135	1.92E-03		1.00E+6		6.36E-01		1.22E+03
Xe-137	1.51E-03		1.00E+6		5.02E-01		7.58E+02
Xe-138	9.21E-03		1.00E+6		4.28E-01		3.94E+03
Ar-41	9.30E-03		1.00E+6		4.37E-01		4.06E+03

* From Regulatory Guide 1.109, Table B-1 (mrad/yr per pCi/m^3)

** The finite cloud correction factor is described in Section 3.6.

*** Mi (mrad/yr per uCi/m^3)

TABLE 3-7

AIR DOSE FACTORS

Ni

FROM NOBLE GASES (BETA)

NUCLIDE	Beta*	X (pCi/uCi) =	Ni**
Kr-83m	2.88E-04	1.00E+6	2.88E+02
Kr-85m	1.97E-03	1.00E+6	1.97E+03
Kr-85	1.95E-03	1.00E+6	1.95E+03
Kr-87	1.03E-02	1.00E+6	1.03E+04
Kr-88	2.93E-03	1.00E+6	2.93E+03
Kr-89	1.06E-02	1.00E+6	1.06E+04
Kr-90	7.83E-03	1.00E+6	7.83E+03
Xe-131m	1.11E-03	1.00E+6	1.11E+03
Xe-133m	1.48E-03	1.00E+6	1.48E+03
Xe-133	1.05E-03	1.00E+6	1.05E+03
Xe-135m	7.39E-04	1.00E+6	7.39E+02
Xe-135	2.46E-03	1.00E+6	2.46E+03
Xe-137	1.27E-02	1.00E+6	1.27E+04
Xe-138	4.75E-03	1.00E+6	4.75E+03
Ar-41	3.28E-03	1.00E+6	3.28E+03

* From Regulatory Guide 1.109, Table B-1 (mrad/yr per pCi/m^3)

** Ni (mrad/yr per uCi/m^3)

TABLE 3-8

DOSE FACTORS FOR SITE BOUNDARY USING STANDARD ISOTOPIC MIXTURES

INSTANTANEOUS RELEASE MIXTURE

NUCLIDE	RELATIVE ABUNDANCE	WEIGHTED DOSE FACTORS
Kr 85m	5.56E-2	$\bar{K}$ = 1.49E+3 (mrem - m³ per μCi-yr)
Kr 87	5.70E-2	$\bar{L}$ = 1.42E+3 (mrem - m³ per μCi-yr)
Kr 88	11.95E-2	$\bar{M}$ = 1.58E+3 (mrad - m³ per μCi-yr)
Xe 133m	1.14E-2	$\bar{N}$ = 2.02E+3 (mrad - m³ per μCi-yr)
Xe 133	53.57E-2	
Xe 135m	12.01E-2	(SEE SECTION 3.3.1)
Xe 135	3.25E-2	
Ar 41	6.82E-2	

TIME AVERAGED RELEASE MIXTURE

NUCLIDE	RELATIVE ABUNDANCE	WEIGHTED DOSE FACTORS
Kr 85	5.33E-5	$\bar{K}$ = 4.11E2 (mrem - m³ per μCi-yr)
Kr 85m	1.63E-2	$\bar{L}$ = 6.25E2 (mrem - m³ per μCi-yr)
Xe 131m	4.72E-4	$\bar{M}$ = 4.61E2 (mrad - m³ per μCi-yr)
Xe 133	7.89E-1	$\bar{N}$ = 1.34E3 (mrad - m³ per μCi-yr)
Xe 133m	4.46E-4	
Xe 135	1.93E-1	

TABLE 3-8 BASES

Instantaneous Mix:

These dose factors are generated from the mixture that would be seen in the reactor coolant (undecayed) if the unit were operated with several leaking rods with exposed fuel. The mixture was chosen based upon review of pressurized reactor coolant samples taken during operation with varying fuel conditions (pct, exposed fuel, tramp only). This mixture provided the most restrictive mixture and is used to calculate a conservative instantaneous release rate in μCi/sec before an actual sample of the release is available (see Appendix 3A).

Time Averaged Release Mixture:

This mixture is the conservative time averaged release mixture taken from a review of three years of semi-annual effluent reports. This mixture was from the most restrictive release period (first quarter 1984) reviewed. These dose factors are used to determine representative time averaged release rates in curies/seconds.

TABLE 3-9

LOCATIONS OF SITE BOUNDARY AND NEAREST RESIDENCE

SECTOR	DISTANCE * NEAREST POINT OF SITE BOUNDARY (Meters)	DISTANCE* NEAREST RESIDENCE
N	RIVER	1950
NNW	RIVER	1740
NW	RIVER	1830
WNW	RIVER	1830
W	RIVER	1890
WSW	RIVER	2135
SW	350	2745
SSW	380	1525
S	580	1280
SSE	595	1220
SE	580	1100
ESE	580	1070
E	625	730
ENE	760	1370
NE	790	1525
NNE	RIVER	3050

* Measured from Indian Point No. 3.

Table 3-10a

ADULT INHALATION Ri(I) (mrem/yr per uCi/m^3)

Isotope	BONE	LIVER	TOT BODY	THYROID	KIDNEY	LUNG	GILLI
H-3	0.00E+00	1.26E+03	1.26E+03	1.26E+03	1.26E+03	1.26E+03	1.26E+03
Be-7	0.00E+00	0.00E+00	0.00E+00	0.00E+00	0.00E+00	0.00E+00	0.00E+00
Na-24	1.02E+04	1.02E+04	1.02E+04	1.02E+04	1.02E+04	1.02E+04	1.02E+04
P-32	1.32E+06	7.71E+04	5.01E+04	0.00E+00	0.00E+00	0.00E+00	8.64E+04
Cr-51	0.00E+00	0.00E+00	1.00E+02	5.95E+01	2.28E+01	1.44E+04	3.32E+03
Mn-54	0.00E+00	3.96E+04	6.30E+03	0.00E+00	9.84E+03	1.40E+06	7.74E+04
Mn-56	0.00E+00	1.24E+00	1.83E-01	0.00E+00	1.30E+00	9.44E+03	2.02E+04
Fe-55	2.46E+04	1.70E+04	3.94E+03	0.00E+00	0.00E+00	7.21E+04	6.03E+03
Fe-59	1.18E+04	2.78E+04	1.06E+04	0.00E+00	0.00E+00	1.02E+06	1.88E+05
Co-58	0.00E+00	1.58E+03	2.07E+03	0.00E+00	0.00E+00	9.28E+05	1.06E+05
Co-60	0.00E+00	1.15E+04	1.48E+04	0.00E+00	0.00E+00	5.97E+06	2.85E+05
Ni-63	4.32E+05	3.14E+04	1.45E+04	0.00E+00	0.00E+00	1.78E+05	1.34E+04
Ni-65	1.54E+00	2.10E-01	9.12E-02	0.00E+00	0.00E+00	5.60E+03	1.23E+04
Cu-64	0.00E+00	1.46E+00	6.15E-01	0.00E+00	4.62E+00	6.78E+03	4.90E+04
Zn-65	3.24E+04	1.03E+05	4.66E+04	0.00E+00	6.90E+04	8.64E+05	5.34E+04
Zn-69	3.38E-02	6.51E-02	4.52E-03	0.00E+00	4.22E-02	9.20E+02	1.63E+01
Br-83	0.00E+00	0.00E+00	2.41E+02	0.00E+00	0.00E+00	0.00E+00	2.32E+02
Br-84	0.00E+00	0.00E+00	3.13E+02	0.00E+00	0.00E+00	0.00E+00	1.64E-03
Br-85	0.00E+00	0.00E+00	1.28E+01	0.00E+00	0.00E+00	0.00E+00	0.00E+00
Rb-86	0.00E+00	1.35E+05	5.90E+04	0.00E+00	0.00E+00	0.00E+00	1.66E+04
Rb-88	0.00E+00	3.87E+02	1.93E+02	0.00E+00	0.00E+00	0.00E+00	3.34E-09
Rb-89	0.00E+00	2.56E+02	1.70E+02	0.00E+00	0.00E+00	0.00E+00	9.28E-12
Sr-89	3.04E+05	0.00E+00	8.72E+03	0.00E+00	0.00E+00	1.40E+06	3.50E+05
Sr-90	9.92E+07	0.00E+00	6.10E+06	0.00E+00	0.00E+00	9.60E+06	7.22E+05
Sr-91	6.19E+01	0.00E+00	2.50E+00	0.00E+00	0.00E+00	3.65E+04	1.91E+05
Sr-92	6.74E+00	0.00E+00	2.91E-01	0.00E+00	0.00E+00	1.65E+04	4.30E+04
Y-90	2.09E+03	0.00E+00	5.61E+01	0.00E+00	0.00E+00	1.70E+05	5.06E+05
Y-91m	2.61E-01	0.00E+00	1.02E-02	0.00E+00	0.00E+00	1.92E+03	1.33E+00
Y-91	4.62E+05	0.00E+00	1.24E+04	0.00E+00	0.00E+00	1.70E+06	3.85E+05
Y-92	1.03E+01	0.00E+00	3.02E-01	0.00E+00	0.00E+00	1.57E+04	7.35E+04
Y-93	9.44E+01	0.00E+00	2.61E+00	0.00E+00	0.00E+00	4.85E+04	4.22E+05
Zr-95	1.07E+05	3.44E+04	2.33E+04	0.00E+00	5.42E+04	1.77E+06	1.50E+05
Zr-97	9.68E+01	1.96E+01	9.04E+00	0.00E+00	2.97E+01	7.87E+04	5.23E+05
Nb-95	1.41E+04	7.82E+03	4.21E+03	0.00E+00	7.74E+03	5.05E+05	1.04E+05
Mo-99	0.00E+00	1.21E+02	2.30E+01	0.00E+00	2.91E+02	9.12E+04	2.48E+05
Tc-99m	1.03E-03	2.91E-03	3.70E-02	0.00E+00	4.42E-02	7.64E+02	4.16E+03
Tc-101	4.18E-05	6.02E-05	5.90E-04	0.00E+00	1.08E-03	3.99E+02	1.09E-11
Ru-103	1.53E+03	0.00E+00	6.58E+02	0.00E+00	5.83E+03	5.05E+05	1.10E+05
Ru-105	7.90E-01	0.00E+00	3.11E-01	0.00E+00	1.02E+00	1.10E+04	4.82E+04
Ru-106	6.91E+04	0.00E+00	8.72E+03	0.00E+00	1.34E+05	9.36E+06	9.12E+05
Ag-110m	1.08E+04	1.00E+04	5.94E+03	0.00E+00	1.97E+04	4.63E+06	3.02E+05
Sb-122	0.00E+00	0.00E+00	0.00E+00	0.00E+00	0.00E+00	0.00E+00	0.00E+00
Sb-124	3.12E+04	5.89E+02	1.24E+04	7.55E+01	0.00E+00	2.48E+06	4.06E+05
Sb-125	5.34E+04	5.95E+02	1.26E+04	5.40E+01	0.00E+00	1.74E+06	1.01E+05

Table 3-10a

ADULT INHALATION Ri(I) (mrem/yr per uCi/m^3)

Isotope	BONE	LIVER	TOT BODY	THYROID	KIDNEY	LUNG	GILLI
Te-125m	3.42E+03	1.58E+03	4.67E+02	1.05E+03	1.24E+04	3.14E+05	7.06E+04
Te-127m	1.26E+04	5.77E+03	1.57E+03	3.29E+03	4.58E+04	9.60E+05	1.50E+05
Te-127	1.40E+00	6.42E-01	3.10E-01	1.06E+00	5.10E+00	6.51E+03	5.74E+04
Te-129m	9.76E+03	4.67E+03	1.58E+03	3.44E+03	3.66E+04	1.16E+06	3.83E+05
Te-129	4.98E-02	2.39E-02	1.24E-02	3.90E-02	1.87E-01	1.94E+03	1.57E+02
Te-131m	6.99E+01	4.36E+01	2.90E+01	5.50E+01	3.09E+02	1.46E+05	5.56E+05
Te-131	1.11E-02	5.95E-03	3.59E-03	9.36E-03	4.37E-02	1.39E+03	1.84E+01
Te-132	2.60E+02	2.15E+02	1.62E+02	1.90E+02	1.46E+03	2.88E+05	5.10E+05
I-130	4.58E+03	1.34E+04	5.28E+03	1.14E+06	2.09E+04	0.00E+00	7.69E+03
I-131	2.52E+04	3.58E+04	2.05E+04	1.19E+07	6.13E+04	0.00E+00	6.28E+03
I-132	1.16E+03	3.26E+03	1.16E+03	1.14E+05	5.18E+03	0.00E+00	4.06E+02
I-133	8.64E+03	1.48E+04	4.52E+03	2.15E+06	2.58E+04	0.00E+00	8.88E+03
I-134	6.44E+02	1.73E+03	6.15E+02	2.98E+04	2.75E+03	0.00E+00	1.01E+00
I-135	2.68E+03	6.98E+03	2.57E+03	4.48E+05	1.11E+04	0.00E+00	5.25E+03
Cs-134	3.73E+05	8.48E+05	7.28E+05	0.00E+00	2.87E+05	9.76E+04	1.04E+04
Cs-136	3.90E+04	1.46E+05	1.10E+05	0.00E+00	8.56E+04	1.20E+04	1.17E+04
Cs-137	4.78E+05	6.21E+05	4.28E+05	0.00E+00	2.22E+05	7.52E+04	8.40E+03
Cs-138	3.31E+02	6.21E+02	3.24E+02	0.00E+00	4.80E+02	4.86E+01	1.86E-03
Ba-139	9.36E-01	6.66E-04	2.74E-02	0.00E+00	6.22E-04	3.76E+03	8.96E+02
Ba-140	3.90E+04	4.90E+01	2.57E+03	0.00E+00	1.67E+01	1.27E+06	2.18E+05
Ba-141	1.00E-01	7.53E-05	3.36E-03	0.00E+00	7.00E-05	1.94E+03	1.16E-07
Ba-142	2.63E-02	2.70E-05	1.66E-03	0.00E+00	2.29E-05	1.19E+03	1.57E-16
La-140	3.44E+02	1.74E+02	4.58E+01	0.00E+00	0.00E+00	1.36E+05	4.58E+05
La-142	6.83E-01	3.10E-01	7.72E-02	0.00E+00	0.00E+00	6.33E+03	2.11E+03
Ce-141	1.99E+04	1.35E+04	1.53E+03	0.00E+00	6.26E+03	3.62E+05	1.20E+05
Ce-143	1.86E+02	1.38E+02	1.53E+01	0.00E+00	6.08E+01	7.98E+04	2.26E+05
Ce-144	3.43E+06	1.43E+06	1.84E+05	0.00E+00	8.48E+05	7.78E+06	8.16E+05
Pr-143	9.36E+03	3.75E+03	4.64E+02	0.00E+00	2.16E+03	2.81E+05	2.00E+05
Pr-144	3.01E-02	1.25E-02	1.53E-03	0.00E+00	7.05E-03	1.02E+03	2.15E-08
Nd-147	5.27E+03	6.10E+03	3.65E+02	0.00E+00	3.56E+03	2.21E+05	1.73E+05
W-187	8.48E+00	7.08E+00	2.48E+00	0.00E+00	0.00E+00	2.90E+04	1.55E+05
Np-239	2.30E+02	2.26E+01	1.24E+01	0.00E+00	7.00E+01	3.76E+04	1.19E+05
K-40	0.00E+00	0.00E+00	0.00E+00	0.00E+00	0.00E+00	0.00E+00	0.00E+00
Co-57	0.00E+00	6.92E+02	6.71E+02	0.00E+00	0.00E+00	3.70E+05	3.14E+04
Sr-85	3.20E+04	0.00E+00	7.76E+05	0.00E+00	0.00E+00	4.80E+05	6.08E+04
Y-88	0.00E+00	0.00E+00	0.00E+00	0.00E+00	0.00E+00	0.00E+00	0.00E+00
Nb-94	0.00E+00	0.00E+00	0.00E+00	0.00E+00	0.00E+00	0.00E+00	0.00E+00
Nb-97	2.22E-01	5.62E-02	2.05E-02	0.00E+00	6.54E-02	2.40E+03	2.42E+02
Cd-109	0.00E+00	3.92E+05	1.28E+04	0.00E+00	3.76E+05	7.28E+05	6.56E+04
Sn-113	6.56E+04	2.16E+03	4.48E+03	1.36E+03	0.00E+00	9.60E+05	1.20E+04
Ba-133	7.60E+04	3.36E+03	2.00E+04	0.00E+00	1.68E+01	1.52E+06	8.00E+04
Te-134	3.07E-02	2.58E-02	1.26E-02	2.75E-02	1.74E-01	3.47E+03	2.38E-01
Ce-139	0.00E+00	0.00E+00	0.00E+00	0.00E+00	0.00E+00	0.00E+00	0.00E+00
Hg-203	0.00E+00	0.00E+00	0.00E+00	0.00E+00	0.00E+00	0.00E+00	0.00E+00

Table 3-10b

TEEN INHALATION Ri(I) (mrem/yr per uCi/m^3)

Isotope	BONE	LIVER	TOT BODY	THYROID	KIDNEY	LUNG	GILLI
H-3	0.00E+00	1.27E+03	1.27E+03	1.27E+03	1.27E+03	1.27E+03	1.27E+03
Be-7	0.00E+00	0.00E+00	0.00E+00	0.00E+00	0.00E+00	0.00E+00	0.00E+00
Na-24	1.38E+04	1.38E+04	1.38E+04	1.38E+04	1.38E+04	1.38E+04	1.38E+04
P-32	1.89E+06	1.10E+05	7.16E+04	0.00E+00	0.00E+00	0.00E+00	9.28E+04
Cr-51	0.00E+00	0.00E+00	1.35E+02	7.50E+01	3.07E+01	2.10E+04	3.00E+03
Mn-54	0.00E+00	5.11E+04	8.40E+03	0.00E+00	1.27E+04	1.98E+06	6.68E+04
Mn-56	0.00E+00	1.70E+00	2.52E-01	0.00E+00	1.79E+00	1.52E+04	5.74E+04
Fe-55	3.34E+04	2.38E+04	5.54E+03	0.00E+00	0.00E+00	1.24E+05	6.39E+03
Fe-59	1.59E+04	3.70E+04	1.43E+04	0.00E+00	0.00E+00	1.53E+06	1.78E+05
Co-58	0.00E+00	2.07E+03	2.78E+03	0.00E+00	0.00E+00	1.34E+06	9.52E+04
Co-60	0.00E+00	1.51E+04	1.98E+04	0.00E+00	0.00E+00	8.72E+06	2.59E+05
Ni-63	5.80E+05	4.34E+04	1.98E+04	0.00E+00	0.00E+00	3.07E+05	1.42E+04
Ni-65	2.18E+00	2.93E-01	1.27E-01	0.00E+00	0.00E+00	9.36E+03	3.67E+04
Cu-64	0.00E+00	2.03E+00	8.48E-01	0.00E+00	6.41E+00	1.11E+04	6.14E+04
Zn-65	3.86E+04	1.34E+05	6.24E+04	0.00E+00	8.64E+04	1.24E+06	4.66E+04
Zn-69	4.83E-02	9.20E-02	6.46E-03	0.00E+00	6.02E-02	1.58E+03	2.85E+02
Br-83	0.00E+00	0.00E+00	3.44E+02	0.00E+00	0.00E+00	0.00E+00	0.00E+00
Br-84	0.00E+00	0.00E+00	4.33E+02	0.00E+00	0.00E+00	0.00E+00	0.00E+00
Br-85	0.00E+00	0.00E+00	1.83E+01	0.00E+00	0.00E+00	0.00E+00	0.00E+00
Rb-86	0.00E+00	1.90E+05	8.40E+04	0.00E+00	0.00E+00	0.00E+00	1.77E+04
Rb-88	0.00E+00	5.46E+02	2.72E+02	0.00E+00	0.00E+00	0.00E+00	2.92E-05
Rb-89	0.00E+00	3.52E+02	2.33E+02	0.00E+00	0.00E+00	0.00E+00	3.38E-07
Sr-89	4.34E+05	0.00E+00	1.25E+04	0.00E+00	0.00E+00	2.42E+06	3.71E+05
Sr-90	1.08E+08	0.00E+00	6.68E+06	0.00E+00	0.00E+00	1.65E+07	7.65E+05
Sr-91	8.80E+01	0.00E+00	3.51E+00	0.00E+00	0.00E+00	6.07E+04	2.59E+05
Sr-92	9.52E+00	0.00E+00	4.06E-01	0.00E+00	0.00E+00	2.74E+04	1.19E+05
Y-90	2.98E+03	0.00E+00	8.00E+01	0.00E+00	0.00E+00	2.93E+05	5.59E+05
Y-91m	3.70E-01	0.00E+00	1.42E-02	0.00E+00	0.00E+00	3.20E+03	3.02E+01
Y-91	6.61E+05	0.00E+00	1.77E+04	0.00E+00	0.00E+00	2.94E+06	4.09E+05
Y-92	1.47E+01	0.00E+00	4.29E-01	0.00E+00	0.00E+00	2.68E+04	1.65E+05
Y-93	1.35E+02	0.00E+00	3.72E+00	0.00E+00	0.00E+00	8.32E+04	5.79E+05
Zr-95	1.46E+05	4.58E+04	3.15E+04	0.00E+00	6.74E+04	2.69E+06	1.49E+05
Zr-97	1.38E+02	2.72E+01	1.26E+01	0.00E+00	4.12E+01	1.30E+05	6.30E+05
Nb-95	1.86E+04	1.03E+04	5.66E+03	0.00E+00	1.00E+04	7.51E+05	9.68E+04
Mo-99	0.00E+00	1.69E+02	3.22E+01	0.00E+00	4.11E+02	1.54E+05	2.69E+05
Tc-99m	1.38E-03	3.86E-03	4.99E-02	0.00E+00	5.76E-02	1.15E+03	6.13E+03
Tc-101	5.92E-05	8.40E-05	8.24E-04	0.00E+00	1.52E-03	6.67E+02	8.72E-07
Ru-103	2.10E+03	0.00E+00	8.96E+02	0.00E+00	7.43E+03	7.83E+05	1.09E+05
Ru-105	1.12E+00	0.00E+00	4.34E-01	0.00E+00	1.41E+00	1.82E+04	9.04E+04
Ru-106	9.84E+04	0.00E+00	1.24E+04	0.00E+00	1.90E+05	1.61E+07	9.60E+05
Ag-110m	1.38E+04	1.31E+04	7.99E+03	0.00E+00	2.50E+04	6.75E+06	2.73E+05
Sb-122	0.00E+00	0.00E+00	0.00E+00	0.00E+00	0.00E+00	0.00E+00	0.00E+00
Sb-124	4.30E+04	7.94E+02	1.68E+04	9.76E+01	0.00E+00	3.85E+06	3.98E+05
Sb-125	7.38E+04	8.08E+02	1.72E+04	7.04E+01	0.00E+00	2.74E+06	9.92E+04

Table 3-10b

TEEN INHALATION Ri(I) (mrem/yr per uCi/m^3)

Isotope	BONE	LIVER	TOT BODY	THYROID	KIDNEY	LUNG	GILLI
Te-125m	4.88E+03	2.24E+03	6.67E+02	1.40E+03	0.00E+00	5.36E+05	7.50E+04
Te-127m	1.80E+04	8.16E+03	2.18E+03	4.38E+03	6.54E+04	1.66E+06	1.59E+05
Te-127	2.01E+00	9.12E-01	4.42E-01	1.42E+00	7.28E+00	1.12E+04	8.08E+04
Te-129m	1.39E+04	6.58E+03	2.25E+03	4.58E+03	5.19E+04	1.98E+06	4.05E+05
Te-129	7.10E-02	3.38E-02	1.76E-02	5.18E-02	2.66E-01	3.30E+03	1.62E+03
Te-131m	9.84E+01	6.01E+01	4.02E+01	7.25E+01	4.39E+02	2.38E+05	6.21E+05
Te-131	1.58E-02	8.32E-03	5.04E-03	1.24E-02	6.18E-02	2.34E+03	1.51E+01
Te-132	3.60E+02	2.90E+02	2.19E+02	2.46E+02	1.95E+03	4.49E+05	4.63E+05
I-130	6.24E+03	1.79E+04	7.17E+03	1.49E+06	2.75E+04	0.00E+00	9.12E+03
I-131	3.54E+04	4.91E+04	2.64E+04	1.46E+07	8.40E+04	0.00E+00	6.49E+03
I-132	1.59E+03	4.38E+03	1.58E+03	1.51E+05	6.92E+03	0.00E+00	1.27E+03
I-133	1.22E+04	2.05E+04	6.22E+03	2.92E+06	3.59E+04	0.00E+00	1.03E+04
I-134	8.88E+02	2.32E+03	8.40E+02	3.95E+04	3.66E+03	0.00E+00	2.04E+01
I-135	3.70E+03	9.44E+03	3.49E+03	6.21E+05	1.49E+04	0.00E+00	6.95E+03
Cs-134	5.02E+05	1.13E+06	5.49E+05	0.00E+00	3.75E+05	1.46E+05	9.76E+03
Cs-136	5.15E+04	1.94E+05	1.37E+05	0.00E+00	1.10E+05	1.78E+04	1.09E+04
Cs-137	6.70E+05	8.48E+05	3.11E+05	0.00E+00	3.04E+05	1.21E+05	8.48E+03
Cs-138	4.66E+02	8.56E+02	4.46E+02	0.00E+00	6.62E+02	7.87E+01	2.70E-01
Ba-139	1.34E+00	9.44E-04	3.90E-02	0.00E+00	8.88E-04	6.46E+03	6.45E+03
Ba-140	5.47E+04	6.70E+01	3.52E+03	0.00E+00	2.28E+01	2.03E+06	2.29E+05
Ba-141	1.42E-01	1.06E-04	4.74E-03	0.00E+00	9.84E-05	3.29E+03	7.46E-04
Ba-142	3.70E-02	3.70E-05	2.27E-03	0.00E+00	3.14E-05	1.91E+03	4.79E-10
La-140	4.79E+02	2.36E+02	6.26E+01	0.00E+00	0.00E+00	2.14E+05	4.87E+05
La-142	9.60E-01	4.25E-01	1.06E-01	0.00E+00	0.00E+00	1.02E+04	1.20E+04
Ce-141	2.84E+04	1.90E+04	2.17E+03	0.00E+00	8.88E+03	6.14E+05	1.26E+05
Ce-143	2.66E+02	1.94E+02	2.16E+01	0.00E+00	8.64E+01	1.30E+05	2.55E+05
Ce-144	4.89E+06	2.02E+06	2.62E+05	0.00E+00	1.21E+06	1.34E+07	8.64E+05
Pr-143	1.34E+04	5.31E+03	6.62E+02	0.00E+00	3.09E+03	4.83E+05	2.14E+05
Pr-144	4.30E-02	1.76E-02	2.18E-03	0.00E+00	1.01E-02	1.75E+03	2.35E-04
Nd-147	7.86E+03	8.56E+03	5.13E+02	0.00E+00	5.02E+03	3.72E+05	1.82E+05
W-187	1.20E+01	9.76E+00	3.43E+00	0.00E+00	0.00E+00	4.74E+04	1.77E+05
Np-239	3.38E+02	3.19E+01	1.77E+01	0.00E+00	1.00E+02	6.49E+04	1.32E+05
K-40	0.00E+00	0.00E+00	0.00E+00	0.00E+00	0.00E+00	0.00E+00	0.00E+00
Co-57	0.00E+00	9.44E+02	9.20E+02	0.00E+00	0.00E+00	5.86E+05	3.14E+04
Sr-85	4.00E+04	0.00E+00	1.04E+04	0.00E+00	0.00E+00	7.04E+05	5.52E+04
Y-88	0.00E+00	0.00E+00	0.00E+00	0.00E+00	0.00E+00	0.00E+00	0.00E+00
Nb-94	0.00E+00	0.00E+00	0.00E+00	0.00E+00	0.00E+00	0.00E+00	0.00E+00
Nb-97	3.14E-01	7.78E-02	2.84E-02	0.00E+00	9.12E-02	3.93E+03	2.17E+03
Cd-109	0.00E+00	8.00E+05	2.72E+04	0.00E+00	5.36E+05	1.28E+06	6.88E+04
Sn-113	1.20E+05	3.76E+03	7.76E+03	2.32E+03	0.00E+00	1.60E+06	1.20E+04
Ba-133	3.76E+05	6.40E+03	2.64E+04	0.00E+00	2.24E+01	2.32E+06	7.76E+04
Te-134	4.25E-02	3.48E-02	2.91E-02	3.57E-02	2.33E-01	5.40E+03	1.10E+01
Ce-139	0.00E+00	0.00E+00	0.00E+00	0.00E+00	0.00E+00	0.00E+00	0.00E+00
Hg-203	0.00E+00	0.00E+00	0.00E+00	0.00E+00	0.00E+00	0.00E+00	0.00E+00

Table 3-10c

CHILD INHALATION Ri(I) (mrem/yr per uCi/m^3)

Isotope	BONE	LIVER	TOT BODY	THYROID	KIDNEY	LUNG	GILLI
H-3	0.00E+00	1.12E+03	1.12E+03	1.12E+03	1.12E+03	1.12E+03	1.12E+03
Be-7	0.00E+00	0.00E+00	0.00E+00	0.00E+00	0.00E+00	0.00E+00	0.00E+00
Na-24	1.61E+04	1.61E+04	1.61E+04	1.61E+04	1.61E+04	1.61E+04	1.61E+04
P-32	2.60E+06	1.14E+05	9.88E+04	0.00E+00	0.00E+00	0.00E+00	4.22E+04
Cr-51	0.00E+00	0.00E+00	1.54E+02	8.55E+01	2.43E+01	1.70E+04	1.08E+03
Mn-54	0.00E+00	4.29E+04	9.51E+03	0.00E+00	1.00E+04	1.58E+06	2.29E+04
Mn-56	0.00E+00	1.66E+00	3.12E-01	0.00E+00	1.67E+00	1.31E+04	1.23E+05
Fe-55	4.74E+04	2.52E+04	7.77E+03	0.00E+00	0.00E+00	1.11E+05	2.87E+03
Fe-59	2.07E+04	3.34E+04	1.67E+04	0.00E+00	0.00E+00	1.27E+06	7.07E+04
Co-58	0.00E+00	1.77E+03	3.16E+03	0.00E+00	0.00E+00	1.11E+06	3.44E+04
Co-60	0.00E+00	1.31E+04	2.26E+04	0.00E+00	0.00E+00	7.07E+06	9.62E+04
Ni-63	8.21E+05	4.63E+04	2.80E+04	0.00E+00	0.00E+00	2.75E+05	6.33E+03
Ni-65	2.99E+00	2.96E-01	1.64E-01	0.00E+00	0.00E+00	8.18E+03	8.40E+04
Cu-64	0.00E+00	1.99E+00	1.07E+00	0.00E+00	6.03E+00	9.58E+03	3.67E+04
Zn-65	4.26E+04	1.13E+05	7.03E+04	0.00E+00	7.14E+04	9.95E+05	1.63E+04
Zn-69	6.70E-02	9.66E-02	8.92E-03	0.00E+00	5.85E-02	1.42E+03	1.02E+04
Br-83	0.00E+00	0.00E+00	4.74E+02	0.00E+00	0.00E+00	0.00E+00	0.00E+00
Br-84	0.00E+00	0.00E+00	5.48E+02	0.00E+00	0.00E+00	0.00E+00	0.00E+00
Br-85	0.00E+00	0.00E+00	2.53E+01	0.00E+00	0.00E+00	0.00E+00	0.00E+00
Rb-86	0.00E+00	1.98E+05	1.14E+05	0.00E+00	0.00E+00	0.00E+00	7.99E+03
Rb-88	0.00E+00	5.62E+02	3.66E+02	0.00E+00	0.00E+00	0.00E+00	1.72E+01
Rb-89	0.00E+00	3.45E+02	2.90E+02	0.00E+00	0.00E+00	0.00E+00	1.89E+00
Sr-89	5.99E+05	0.00E+00	1.72E+04	0.00E+00	0.00E+00	2.16E+06	1.67E+05
Sr-90	1.01E+08	0.00E+00	6.44E+06	0.00E+00	0.00E+00	1.48E+07	3.43E+05
Sr-91	1.21E+02	0.00E+00	4.59E+00	0.00E+00	0.00E+00	5.33E+04	1.74E+05
Sr-92	1.31E+01	0.00E+00	5.25E-01	0.00E+00	0.00E+00	2.40E+04	2.42E+05
Y-90	4.11E+03	0.00E+00	1.11E+02	0.00E+00	0.00E+00	2.62E+05	2.68E+05
Y-91m	5.07E-01	0.00E+00	1.84E-02	0.00E+00	0.00E+00	2.81E+03	1.72E+03
Y-91	9.14E+05	0.00E+00	2.44E+04	0.00E+00	0.00E+00	2.63E+06	1.84E+05
Y-92	2.04E+01	0.00E+00	5.81E-01	0.00E+00	0.00E+00	2.39E+04	2.39E+05
Y-93	1.86E+02	0.00E+00	5.11E+00	0.00E+00	0.00E+00	7.44E+04	3.89E+05
Zr-95	1.90E+05	4.18E+04	3.70E+04	0.00E+00	5.96E+04	2.23E+06	6.11E+04
Zr-97	1.88E+02	2.72E+01	1.60E+01	0.00E+00	3.88E+01	1.13E+05	3.51E+05
Nb-95	2.35E+04	9.18E+03	6.55E+03	0.00E+00	8.62E+03	6.14E+05	3.70E+04
Mo-99	0.00E+00	1.72E+02	4.25E+01	0.00E+00	3.92E+02	1.35E+05	1.27E+05
Tc-99m	1.78E-03	3.48E-03	5.77E-02	0.00E+00	5.07E-02	9.51E+02	4.81E+03
Tc-101	8.10E-05	8.51E-05	1.08E-03	0.00E+00	1.45E-03	5.85E+02	1.63E+01
Ru-103	2.79E+03	0.00E+00	1.07E+03	0.00E+00	7.03E+03	6.62E+05	4.48E+04
Ru-105	1.53E+00	0.00E+00	5.55E-01	0.00E+00	1.34E+00	1.59E+04	9.95E+04
Ru-106	1.36E+05	0.00E+00	1.69E+04	0.00E+00	1.84E+05	1.43E+07	4.29E+05
Ag-110m	1.69E+04	1.14E+04	9.14E+03	0.00E+00	2.12E+04	5.48E+06	1.00E+05
Sb-122	0.00E+00	0.00E+00	0.00E+00	0.00E+00	0.00E+00	0.00E+00	0.00E+00
Sb-124	5.74E+04	7.40E+02	2.00E+04	1.26E+02	0.00E+00	3.24E+06	1.64E+05
Sb-125	9.84E+04	7.59E+02	2.07E+04	9.10E+01	0.00E+00	2.32E+06	4.03E+04

Table 3-10c

CHILD INHALATION Ri(I) (mrem/yr per uCi/m^3)

Isotope	BONE	LIVER	TOT BODY	THYROID	KIDNEY	LUNG	GILLI
Te-125m	6.73E+03	2.33E+03	9.14E+02	1.92E+03	0.00E+00	4.77E+05	3.38E+04
Te-127m	2.49E+04	8.55E+03	3.02E+03	6.07E+03	6.36E+04	1.48E+06	7.14E+04
Te-127	2.77E+00	9.51E-01	6.10E-01	1.96E+00	7.07E+00	1.00E+04	5.62E+04
Te-129m	1.92E+04	6.85E+03	3.04E+03	6.33E+03	5.03E+04	1.76E+06	1.82E+05
Te-129	9.77E-02	3.50E-02	2.38E-02	7.14E-02	2.57E-01	2.93E+03	2.55E+04
Te-131m	1.34E+02	5.92E+01	5.07E+01	9.77E+01	4.00E+02	2.06E+05	3.08E+05
Te-131	2.17E-02	8.44E-03	6.59E-03	1.70E-02	5.88E-02	2.05E+03	1.33E+03
Te-132	4.81E+02	2.72E+02	2.63E+02	3.17E+02	1.77E+03	3.77E+05	1.38E+05
I-130	8.18E+03	1.64E+04	8.44E+03	1.85E+06	2.45E+04	0.00E+00	5.11E+03
I-131	4.81E+04	4.81E+04	2.73E+04	1.62E+07	7.88E+04	0.00E+00	2.84E+03
I-132	2.12E+03	4.07E+03	1.88E+03	1.94E+05	6.25E+03	0.00E+00	3.20E+03
I-133	1.66E+04	2.03E+04	7.70E+03	3.85E+06	3.38E+04	0.00E+00	5.48E+03
I-134	1.17E+03	2.16E+03	9.95E+02	5.07E+04	3.30E+03	0.00E+00	9.55E+02
I-135	4.92E+03	8.73E+03	4.14E+03	7.92E+05	1.34E+04	0.00E+00	4.44E+03
Cs-134	6.51E+05	1.01E+06	2.25E+05	0.00E+00	3.30E+05	1.21E+05	3.85E+03
Cs-136	6.51E+04	1.71E+05	1.16E+05	0.00E+00	9.55E+04	1.45E+04	4.18E+03
Cs-137	9.07E+05	8.25E+05	1.28E+05	0.00E+00	2.82E+05	1.04E+05	3.62E+03
Cs-138	6.33E+02	8.40E+02	5.55E+02	0.00E+00	6.22E+02	6.81E+01	2.70E+02
Ba-139	1.84E+00	9.84E-04	5.36E-02	0.00E+00	8.62E-04	5.77E+03	5.77E+04
Ba-140	7.40E+04	6.48E+01	4.33E+03	0.00E+00	2.11E+01	1.74E+06	1.02E+05
Ba-141	1.96E-01	1.09E-04	6.36E-03	0.00E+00	9.47E-05	2.92E+03	2.75E+02
Ba-142	4.99E-02	3.60E-05	2.79E-03	0.00E+00	2.91E-05	1.64E+03	2.74E+00
La-140	6.44E+02	2.25E+02	7.55E+01	0.00E+00	0.00E+00	1.83E+05	2.26E+05
La-142	1.29E+00	4.11E-01	1.29E-01	0.00E+00	0.00E+00	8.70E+03	7.59E+04
Ce-141	3.92E+04	1.95E+04	2.90E+03	0.00E+00	8.55E+03	5.44E+05	5.66E+04
Ce-143	3.66E+02	1.99E+02	2.87E+01	0.00E+00	8.36E+01	1.15E+05	1.27E+05
Ce-144	6.77E+06	2.12E+06	3.61E+05	0.00E+00	1.17E+06	1.20E+07	3.89E+05
Pr-143	1.85E+04	5.55E+03	9.14E+02	0.00E+00	3.00E+03	4.33E+05	9.73E+04
Pr-144	5.96E-02	1.85E-02	3.00E-03	0.00E+00	9.77E-03	1.57E+03	1.97E+02
Nd-147	1.08E+04	8.73E+03	6.81E+02	0.00E+00	4.81E+03	3.28E+05	8.21E+04
W-187	1.63E+01	9.66E+00	4.33E+00	0.00E+00	0.00E+00	4.11E+04	9.10E+04
Np-239	4.66E+02	3.34E+01	2.35E+01	0.00E+00	9.73E+01	5.81E+04	6.40E+04
K-40	0.00E+00	0.00E+00	0.00E+00	0.00E+00	0.00E+00	0.00E+00	0.00E+00
Co-57	0.00E+00	9.03E+02	1.07E+03	0.00E+00	0.00E+00	5.07E+05	1.32E+04
Sr-85	4.44E+04	0.00E+00	1.18E+04	0.00E+00	0.00E+00	5.55E+05	2.04E+04
Y-88	0.00E+00	0.00E+00	0.00E+00	0.00E+00	0.00E+00	0.00E+00	0.00E+00
Nb-94	0.00E+00	0.00E+00	0.00E+00	0.00E+00	0.00E+00	0.00E+00	0.00E+00
Nb-97	4.29E-01	7.70E-02	3.60E-02	0.00E+00	8.55E-02	3.42E+03	2.78E+04
Cd-109	0.00E+00	7.03E+05	2.96E+04	0.00E+00	6.29E+05	1.11E+06	3.00E+04
Sn-113	1.41E+05	3.29E+03	8.51E+03	2.63E+03	0.00E+00	1.33E+06	4.81E+03
Ba-133	4.07E+05	4.07E+03	3.70E+04	0.00E+00	2.00E+01	1.92E+06	3.07E+04
Te-134	5.66E-02	3.26E-02	3.48E-02	4.59E-02	2.11E-01	4.55E+03	1.80E+03
Ce-139	0.00E+00	0.00E+00	0.00E+00	0.00E+00	0.00E+00	0.00E+00	0.00E+00
Hg-203	0.00E+00	0.00E+00	0.00E+00	0.00E+00	0.00E+00	0.00E+00	0.00E+00

Table 3-10d

INFANT INHALATION Ri(I) (mrem/yr per uCi/m^3)

Isotope	BONE	LIVER	TOT BODY	THYROID	KIDNEY	LUNG	GILLI
H-3	0.00E+00	6.47E+02	6.47E+02	6.47E+02	6.47E+02	6.47E+02	6.47E+02
Be-7	0.00E+00	0.00E+00	0.00E+00	0.00E+00	0.00E+00	0.00E+00	0.00E+00
Na-24	1.06E+04	1.06E+04	1.06E+04	1.06E+04	1.06E+04	1.06E+04	1.06E+04
P-32	2.03E+06	1.12E+05	7.74E+04	0.00E+00	0.00E+00	0.00E+00	1.61E+04
Cr-51	0.00E+00	0.00E+00	8.95E+01	5.75E+01	1.32E+01	1.28E+04	3.57E+02
Mn-54	0.00E+00	2.53E+04	4.98E+03	0.00E+00	4.98E+03	1.00E+06	7.[illegible]6E+03
Mn-56	0.00E+00	1.54E+00	2.21E-01	0.00E+00	1.10E+00	1.25E+04	7.17E+04
Fe-55	1.97E+04	1.17E+04	3.33E+03	0.00E+00	0.00E+00	8.69E+04	1.09E+03
Fe-59	1.36E+04	1.[illegible]5E+04	9.48E+03	0.00E+00	0.00E+00	1.02E+06	2.48E+04
Co-58	0.00E+00	1.22E+03	1.82E+03	0.00E+00	0.00E+00	7.77E+05	1.11E+04
Co-60	0.00E+00	8.02E+03	1.18E+04	0.00E+00	0.00E+00	4.51E+06	3.19E+04
Ni-63	3.39E+05	2.04E+04	1.16E+04	0.00E+00	0.00E+00	2.09E+05	2.42E+03
Ni-65	2.39E+00	2.84E-01	1.23E-01	0.00E+00	0.00E+00	8.12E+03	5.01E+04
Cu-64	0.00E+00	1.88E+00	7.74E-01	0.00E+00	3.98E+00	9.30E+03	1.50E+04
Zn-65	1.93E+04	6.26E+04	3.11E+04	0.00E+00	3.25E+04	6.47E+05	5.14E+04
Zn-69	5.39E-02	9.67E-02	7.18E-03	0.00E+00	4.02E-02	1.47E+03	1.32E+04
Br-83	0.00E+00	0.00E+00	3.81E+02	0.00E+00	0.00E+00	0.00E+00	0.00E+00
Br-84	0.00E+00	0.00E+00	4.00E+02	0.00E+00	0.00E+00	0.00E+00	0.00E+00
Br-85	0.00E+00	0.00E+00	2.04E+01	0.00E+00	0.00E+00	0.00E+00	0.[illegible]0E+00
Rb-86	0.00E+00	1.90E+05	8.82E+04	0.00E+00	0.00E+00	0.00E+00	3.04E+03
Rb-88	0.00E+00	5.57E+02	2.87E+02	0.00E+00	0.00E+00	0.00E+00	3.39E+02
Rb-89	0.00E+00	3.21E+02	2.06E+02	0.00E+00	0.00E+00	0.00E+00	6.82E+01
Sr-89	3.98E+05	0.00E+00	1.14E+04	0.00E+00	0.00E+00	2.[illegible]3E+06	6.40E+04
Sr-90	4.09E+07	0.00E+00	2.59E+06	0.00E+00	0.00E+00	1.12E+07	1.31E+05
Sr-91	9.56E+01	0.00E+00	3.46E+00	0.00E+00	0.00E+00	5.26E+04	7.34E+04
Sr-92	1.05E+01	0.00E+00	3.91E-01	0.00E+00	0.00E+00	2.38E+04	1.40E+05
Y-90	3.29E+03	0.00E+00	8.82E+01	0.00E+00	0.00E+00	2.69E+05	1.04E+05
Y-91m	4.07E-01	0.00E+00	1.39E-02	0.00E+00	0.00E+00	2.79E+03	2.35E+03
Y-91	5.88E+05	0.00E+00	1.57E+04	0.00E+00	0.00E+00	2.45E+06	7.03E+04
Y-92	1.64E+01	0.00E+00	4.61E-01	0.00E+00	0.00E+00	2.45E+04	1.27E+05
Y-93	1.50E+02	0.00E+00	4.07E+00	0.00E+00	0.00E+00	7.64E+04	1.67E+05
Zr-95	1.15E+05	2.79E+04	2.03E+04	0.00E+00	3.11E+04	1.75E+06	2.17E+04
Zr-97	1.50E+02	2.56E+01	1.17E+01	0.00E+00	2.59E+01	1.10E+05	1.40E+05
Nb-95	1.57E+04	6.43E+03	3.78E+03	0.00E+00	4.72E+03	4.79E+05	1.27E+04
Mo-99	0.00E+00	1.65E+02	3.23E+01	0.00E+00	2.65E+02	1.35E+05	4.87E+04
Tc-99m	1.40E-03	2.88E-03	3.72E-02	0.00E+00	3.11E-02	8.11E+02	2.03E+03
Tc-101	6.51E-05	8.23E-05	8.12E-04	0.00E+00	9.79E-04	5.84E+02	8.44E+02
Ru-103	2.02E+03	0.00E+00	6.79E+02	0.00E+00	4.24E+03	5.52E+05	1.61E+04
Ru-105	1.22E+00	0.00E+00	4.10E-01	0.00E+00	8.99E-01	1.57E+04	4.84E+04
Ru-106	8.68E+04	0.00E+00	1.09E+04	0.00E+00	1.07E+05	1.16E+07	1.64E+05
Ag-110m	9.98E+03	7.22E+03	5.00E+03	0.00E+00	1.09E+04	3.67E+06	3.30E+04
Sb-122	0.00E+00	0.00E+00	0.00E+00	0.00E+00	0.00E+00	0.00E+00	0.00E+00
Sb-124	3.79E+04	5.56E+02	1.20E+04	1.01E+02	0.00E+00	2.65E+06	5.91E+04
Sb-125	5.17E+04	4.77E+02	1.09E+04	6.23E+01	0.00E+00	1.64E+06	1.47E+04

Table 3-10d

INFANT INHALATION Ri(I) (mrem/yr per uCi/m^3)

Isotope	BONE	LIVER	TOT BODY	THYROID	KIDNEY	LUNG	GILLI
Te-125m	4.76E+03	1.99E+03	6.58E+02	1.62E+03	0.00E+00	4.47E+05	1.29E+04
Te-127m	1.67E+04	6.90E+03	2.07E+03	4.87E+03	3.75E+04	1.31E+06	2.73E+04
Te-127	2.23E+04	9.53E-01	4.89E-01	1.85E+00	4.86E+00	1.03E+04	2.44E+04
Te-129m	1.41E+04	6.09E+03	2.23E+03	5.47E+03	3.18E+04	1.68E+06	6.90E+04
Te-129	7.88E-02	3.47E-02	1.88E-02	6.75E-02	1.75E-01	3.00E+03	2.63E+04
Te-131m	1.07E+02	5.50E+01	3.63E+01	8.93E+01	2.65E+02	1.99E+05	1.19E+05
Te-131	1.74E-02	8.22E-03	5.00E-03	1.58E-02	3.99E-02	2.06E+03	8.22E+03
Te-132	3.72E+02	2.37E+02	1.76E+02	2.79E+02	1.03E+03	3.40E+05	4.41E+04
I-130	6.36E+03	1.39E+04	5.57E+03	1.60E+06	1.53E+04	0.00E+00	1.99E+03
I-131	3.79E+04	4.44E+04	1.96E+04	1.48E+07	5.18E+04	0.00E+00	1.06E+03
I-132	1.69E+03	3.54E+03	1.26E+03	1.69E+05	3.95E+03	0.00E+00	1.90E+03
I-133	1.32E+04	1.92E+04	5.60E+03	3.56E+06	2.24E+04	0.00E+00	2.16E+03
I-134	9.21E+02	1.88E+03	6.65E+02	4.45E+04	2.09E+03	0.00E+00	1.29E+03
I-135	3.86E+03	7.60E+03	2.77E+03	6.96E+05	8.47E+03	0.00E+00	1.83E+03
Cs-134	3.96E+05	7.03E+05	7.45E+04	0.00E+00	1.90E+05	7.97E+04	1.33E+03
Cs-136	4.83E+04	1.35E+05	5.29E+04	0.00E+00	5.64E+04	1.18E+04	1.43E+03
Cs-137	5.49E+05	6.12E+05	4.55E+04	0.00E+00	1.72E+05	7.13E+04	1.33E+03
Cs-138	5.05E+02	7.81E+02	3.98E+02	0.00E+00	4.10E+02	6.54E+01	8.76E+02
Ba-139	1.48E+00	9.84E-04	4.30E-02	0.00E+00	5.92E-04	5.95E+03	5.10E+04
Ba-140	5.60E+04	5.60E+01	2.90E+03	0.00E+00	1.34E+01	1.60E+06	3.84E+04
Ba-141	1.57E-01	1.08E-04	4.97E-03	0.00E+00	6.50E-05	2.97E+03	4.75E+03
Ba-142	3.98E-02	3.30E-05	1.96E-03	0.00E+00	1.90E-05	1.55E+03	6.93E+02
La-140	5.05E+02	2.00E+02	5.15E+01	0.00E+00	0.00E+00	1.68E+05	8.48E+04
La-142	1.03E+00	3.77E-01	9.04E-02	0.00E+00	0.00E+00	8.22E+03	5.95E+04
Ce-141	2.77E+04	1.67E+04	1.99E+03	0.00E+00	5.25E+03	5.17E+05	2.16E+04
Ce-143	2.93E+02	1.93E+02	2.21E+01	0.00E+00	5.64E+01	1.16E+05	4.97E+04
Ce-144	3.19E+06	1.21E+06	1.76E+05	0.00E+00	5.38E+05	9.84E+06	1.48E+05
r-143	1.40E+04	5.24E+03	6.99E+02	0.00E+00	1.97E+03	4.33E+05	3.72E+04
Pr-144	4.79E-02	1.85E-02	2.41E-03	0.00E+00	6.72E-03	1.61E+03	4.28E+03
Nd-147	7.94E+03	8.13E+03	5.00E+02	0.00E+00	3.15E+03	3.22E+05	3.12E+04
W-187	1.30E+01	9.02E+00	3.12E+00	0.00E+00	0.00E+00	3.96E+04	3.56E+04
Np-239	3.71E+02	3.32E+01	1.88E+01	0.00E+00	6.62E+01	5.95E+04	2.49E+04
K-40	0.00E+00	0.00E+00	0.00E+00	0.00E+00	0.00E+00	0.00E+00	0.00E+00
Co-57	0.00E+00	6.51E+02	6.41E+02	0.00E+00	0.00E+00	3.79E+05	4.86E+03
Sr-85	3.78E+04	0.00E+00	7.56E+03	0.00E+00	0.00E+00	4.20E+05	6.72E+03
Y-88	0.00E+00	0.00E+00	0.00E+00	0.00E+00	0.00E+00	0.00E+00	0.00E+00
Nb-94	0.00E+00	0.00E+00	0.00E+00	0.00E+00	0.00E+00	0.00E+00	0.00E+00
Nb-97	3.42E-01	7.29E-02	2.63E-02	0.00E+00	5.70E-02	3.32E+03	2.69E+04
Cd-109	0.00E+00	3.64E+05	1.40E+04	0.00E+00	2.80E+05	8.68E+05	1.12E+04
Sn-113	8.40E+04	2.24E+03	5.04E+03	1.82E+03	0.00E+00	1.09E+06	1.68E+03
Ba-133	2.66E+05	2.38E+03	1.82E+04	0.00E+00	1.25E+01	1.27E+06	1.08E+04
Te-134	4.45E-02	2.86E-02	2.35E-02	4.07E-02	1.34E-01	4.10E+03	3.54E+03
Ce-139	0.00E+00	0.00E+00	0.00E+00	0.00E+00	0.00E+00	0.00E+00	0.00E+00
Hg-203	0.00E+00	0.00E+00	0.00E+00	0.00E+00	0.00E+00	0.00E+00	0.00E+00

Table 3-11a

ADULT INGESTION (Leafy Vegetable) Ri(V)

m^2 * mrem/yr per uCi/sec (H-3: mrem/yr per uCi/m^3)

Isotope	BONE	LIVER	TOT BODY	THYROID	KIDNEY	LUNG	GILLI
H-3	0.00E+00	2.26E+03	2.26E+03	2.26E+03	2.26E+03	2.26E+03	2.26E+03
Be-7	9.36E+04	2.11E+05	1.05E+05	0.00E+00	2.22E+05	0.00E+00	3.65E+07
Na-24	2.69E+05	2.69E+05	2.69E+05	2.69E+05	2.69E+05	2.69E+05	2.69E+05
P-32	1.40E+09	8.73E+07	5.43E+07	0.00E+00	0.00E+00	0.00E+00	1.58E+08
Cr-51	0.00E+00	0.00E+00	4.64E+04	2.78E+04	1.02E+04	6.16E+04	1.17E+07
Mn-54	0.00E+00	3.13E+08	5.97E+07	0.00E+00	9.31E+07	0.00E+00	9.58E+08
Mn-56	0.00E+00	1.59E+01	2.82E+00	0.00E+00	2.02E+01	0.00E+00	5.07E+02
Fe-55	2.10E+08	1.45E+08	3.38E+07	0.00E+00	0.00E+00	8.08E+07	8.31E+07
Fe-59	1.26E+08	2.96E+08	1.13E+08	0.00E+00	0.00E+00	8.27E+07	9.86E+08
Co-58	0.00E+00	3.07E+07	6.89E+07	0.00E+00	0.00E+00	0.00E+00	6.23E+08
Co-60	0.00E+00	1.67E+08	3.69E+08	0.00E+00	0.00E+00	0.00E+00	3.14E+09
Ni-63	1.04E+10	7.21E+08	3.49E+08	0.00E+00	0.00E+00	0.00E+00	1.50E+08
Ni-65	6.15E+01	7.99E+00	3.64E+00	0.00E+00	0.00E+00	0.00E+00	2.03E+02
Cu-64	0.00E+00	9.20E+03	4.32E+03	0.00E+00	2.32E+04	0.00E+00	7.84E+05
Zn-65	3.17E+08	1.01E+09	4.56E+08	0.00E+00	6.75E+08	0.00E+00	6.36E+08
Zn-69	8.73E-06	1.67E-05	1.16E-06	0.00E+00	1.09E-05	0.00E+00	2.51E-06
Br-83	0.00E+00	0.00E+00	3.11E+00	0.00E+00	0.00E+00	0.00E+00	4.47E+00
Br-84	0.00E+00	0.00E+00	2.48E-11	0.00E+00	0.00E+00	0.00E+00	1.94E-16
Br-85	0.00E+00	0.00E+00	0.00E+00	0.00E+00	0.00E+00	0.00E+00	0.00E+00
Rb-86	0.00E+00	2.19E+08	1.02E+08	0.00E+00	0.00E+00	0.00E+00	4.33E+07
Rb-88	0.00E+00	3.43E-22	1.82E-22	0.00E+00	0.00E+00	0.00E+00	4.74E-33
Rb-89	0.00E+00	1.39E-26	9.74E-27	0.00E+00	0.00E+00	0.00E+00	8.05E-40
Sr-89	9.96E+09	0.00E+00	2.86E+08	0.00E+00	0.00E+00	0.00E+00	1.60E+09
Sr-90	6.05E+11	0.00E+00	1.48E+11	0.00E+00	0.00E+00	0.00E+00	1.75E+10
Sr-91	3.05E+05	0.00E+00	1.23E+04	0.00E+00	0.00E+00	0.00E+00	1.45E+06
Sr-92	4.27E+02	0.00E+00	1.85E+01	0.00E+00	0.00E+00	0.00E+00	8.45E+03
Y-90	1.33E+04	0.00E+00	3.56E+02	0.00E+00	0.00E+00	0.00E+00	1.41E+08
Y-91m	5.22E-09	0.00E+00	2.02E-10	0.00E+00	0.00E+00	0.00E+00	1.53E-08
Y-91	5.11E+06	0.00E+00	1.37E+05	0.00E+00	0.00E+00	0.00E+00	2.81E+09
Y-92	9.15E-01	0.00E+00	2.68E-02	0.00E+00	0.00E+00	0.00E+00	1.60E+04
Y-93	1.70E+02	0.00E+00	4.68E+00	0.00E+00	0.00E+00	0.00E+00	5.38E+06
Zr-95	1.17E+06	3.77E+05	2.55E+05	0.00E+00	5.91E+05	0.00E+00	1.19E+09
Zr-97	3.37E+02	6.81E+01	3.11E+01	0.00E+00	1.03E+02	0.00E+00	2.11E+07
Nb-95	1.43E+05	7.94E+04	4.27E+04	0.00E+00	7.85E+04	0.00E+00	4.82E+08
Mo-99	0.00E+00	6.15E+06	1.17E+06	0.00E+00	1.39E+07	0.00E+00	1.43E+07
Tc-99m	3.10E+00	8.77E+00	1.12E+02	0.00E+00	1.33E+02	4.30E+00	5.19E+03
Tc-101	8.22E-31	1.18E-30	1.16E-29	0.00E+00	2.13E-29	6.05E-31	3.56E-42
Ru-103	4.76E+06	0.00E+00	2.05E+06	0.00E+00	1.82E+07	0.00E+00	5.56E+08
Ru-105	5.39E+01	0.00E+00	2.13E+01	0.00E+00	6.96E+02	0.00E+00	3.29E+04
Ru-106	1.93E+08	0.00E+00	2.44E+07	0.00E+00	3.72E+08	0.00E+00	1.25E+10
Ag-110m	1.05E+07	9.75E+06	5.79E+06	0.00E+00	1.92E+07	0.00E+00	3.98E+09
Sb-122	2.80E+05	6.43E+03	9.65E+04	4.34E+03	0.00E+00	1.68E+05	1.06E+08
Sb-124	1.04E+08	1.96E+06	4.07E+07	2.52E+05	0.00E+00	8.07E+07	2.94E+09
Sb-125	1.37E+08	1.53E+06	3.25E+07	1.39E+05	0.00E+00	1.05E+08	1.50E+09

Table 3-11a

ADULT INGESTION (Leafy Vegetable) Ri(V)

m^2 * mrem/yr per uCi/sec (H-3: mrem/yr per uCi/m^3)

Isotope	BONE	LIVER	TOT BODY	THYROID	KIDNEY	LUNG	GILLI
Te-125m	9.66E+07	3.50E+07	1.29E+07	2.90E+07	3.93E+08	0.00E+00	3.86E+08
Te-127m	3.49E+08	1.25E+08	4.26E+07	8.92E+07	1.42E+09	0.00E+00	1.17E+09
Te-127	5.66E+03	2.03E+03	1.22E+03	4.19E+03	2.31E+04	0.00E+00	4.47E+05
Te-129m	2.51E+08	9.38E+07	3.98E+07	8.63E+07	1.05E+09	0.00E+00	1.27E+09
Te-129	7.62E-04	2.87E-04	1.86E-04	5.85E-04	3.20E-03	0.00E+00	5.75E-04
Te-131m	9.12E+05	4.46E+05	3.72E+05	7.06E+05	4.52E+06	0.00E+00	4.43E+07
Te-131	1.50E-15	6.27E-16	4.74E-16	1.23E-15	6.57E-15	0.00E+00	2.13E-16
Te-132	4.30E+06	2.78E+06	2.61E+06	3.07E+06	2.68E+07	0.00E+00	1.32E+08
I-130	3.92E+05	1.16E+06	4.57E+05	9.81E+07	1.81E+06	0.00E+00	9.96E+05
I-131	8.08E+07	1.16E+08	6.62E+07	3.79E+10	1.98E+08	0.00E+00	3.05E+07
I-132	5.76E+01	1.54E+02	5.39E+01	5.39E+03	2.45E+02	0.00E+00	2.89E+01
I-133	2.09E+06	3.63E+06	1.11E+06	5.33E+08	6.33E+06	0.00E+00	3.26E+06
I-134	9.65E-05	2.62E-04	9.38E-05	4.54E-03	4.17E-04	0.00E+00	2.29E-07
I-135	3.90E+04	1.02E+05	3.77E+04	6.73E+06	1.64E+05	0.00E+00	1.15E+05
Cs-134	4.67E+09	1.11E+10	9.08E+09	0.00E+00	3.59E+09	1.19E+09	1.94E+08
Cs-136	4.24E+07	1.68E+08	1.21E+08	0.00E+00	9.32E+07	1.28E+07	1.90E+07
Cs-137	6.36E+09	8.70E+09	5.70E+09	0.00E+00	2.95E+09	9.81E+08	1.68E+08
Cs-138	3.91E-11	7.73E-11	3.83E-11	0.00E+00	5.68E-11	5.61E-12	3.30E-16
Ba-139	2.68E-02	1.91E-05	7.86E-04	0.00E+00	1.79E-05	1.08E-05	4.76E-02
Ba-140	1.28E+08	1.61E+05	8.38E+06	0.00E+00	5.46E+04	9.20E+04	2.63E+08
Ba-141	1.15E-21	8.70E-25	3.89E-23	0.00E+00	8.09E-25	4.94E-25	5.43E-31
Ba-142	2.46E-39	2.53E-42	1.55E-40	0.00E+00	2.14E-42	1.43E-42	0.00E+00
La-140	1.98E+03	9.98E+02	2.64E+02	0.00E+00	0.00E+00	0.00E+00	7.33E+07
La-142	1.41E-04	6.43E-05	1.60E-05	0.00E+00	0.00E+00	0.00E+00	4.69E-01
Ce-141	1.97E+05	1.33E+05	1.51E+04	0.00E+00	6.19E+04	0.00E+00	5.10E+08
Ce-143	9.98E+02	7.38E+05	8.16E+01	0.00E+00	3.25E+02	0.00E+00	2.76E+07
Ce-144	3.29E+07	1.38E+07	1.77E+06	0.00E+00	8.16E+06	0.00E+00	1.11E+10
Pr-143	6.26E+04	2.51E+04	3.10E+03	0.00E+00	1.[illegible]5E+04	0.00E+00	2.74E+08
Pr-144	3.09E-26	1.28E-26	1.57E-27	0.00E+00	7.23E-27	0.00E+00	4.44E-33
Nd-147	3.33E+04	3.85E+04	2.31E+03	0.00E+00	2.25E+04	0.00E+00	1.85E+08
W-187	3.82E+04	3.19E+04	1.12E+04	0.00E+00	0.00E+00	0.00E+00	1.05E+07
Np-239	1.43E+03	1.41E+02	7.76E+01	0.00E+00	4.39E+02	0.00E+00	2.89E+07
K-40	0.00E+00	0.00E+00	0.00E+00	0.00E+00	0.00E+00	0.00E+00	0.00E+00
Co-57	0.00E+00	1.17E+07	1.95E+07	0.00E+00	0.00E+00	0.00E+00	2.97E+08
Sr-85	0.00E+00	0.00E+00	0.00E+00	0.00E+00	0.00E+00	0.00E+00	0.00E+00
Y-88	0.00E+00	0.00E+00	0.00E+00	0.00E+00	0.00E+00	0.00E+00	0.00E+00
Nb-94	0.00E+00	0.00E+00	0.00E+00	0.00E+00	0.00E+00	0.00E+00	0.00E+00
Nb-97	2.15E-06	5.45E-07	1.99E-07	0.00E+00	6.35E-07	0.00E+00	2.01E-03
Cd-109	0.00E+00	0.00E+00	0.00E+00	0.00E+00	0.00E+00	0.00E+00	0.00E+00
Sn-113	0.00E+00	0.00E+00	0.00E+00	0.00E+00	0.00E+00	0.00E+00	0.00E+00
Ba-133	0.00E+00	0.00E+00	0.00E+00	0.00E+00	0.00E+00	0.00E+00	0.00E+00
Te-134	3.56E-08	2.33E-08	1.43E-08	3.11E-08	2.25E-07	0.00E+00	3.95E-11
Ce-139	0.00E+00	0.00E+00	0.00E+00	0.00E+00	0.00E+00	0.00E+00	0.00E+00
Hg-203	0.00E+00	0.00E+00	0.00E+00	0.00E+00	0.00E+00	0.00E+00	0.00E+00

Table 3-11b

TEEN INGESTION (Leafy Vegetable) Ri(V)

m^2 * mrem/yr per uCi/sec (H-3: mrem/yr per uCi/m^3)

Isotope	BONE	LIVER	TOT BODY	THYROID	KIDNEY	LUNG	GILLI
H-3	0.00E+00	2.59E+03	2.59E+03	2.59E+03	2.59E+03	2.59E+03	2.59E+03
Be-7	1.43E+05	3.20E+05	1.60E+05	0.00E+00	3.39E+05	0.00E+00	3.90E+07
Na-24	2.39E+05	2.39E+05	2.39E+05	2.39E+05	2.39E+05	2.39E+05	2.39E+05
P-32	1.61E+09	9.97E+07	6.24E+07	0.00E+00	0.00E+00	0.00E+00	1.35E+08
Cr-51	0.00E+00	0.00E+00	6.17E+04	3.43E+04	1.35E+04	8.81E+04	1.04E+07
Mn-54	0.00E+00	4.54E+08	9.01E+07	0.00E+00	1.36E+08	0.00E+00	9.32E+08
Mn-56	0.00E+00	1.43E+01	2.55E+00	0.00E+00	1.81E+01	0.00E+00	9.44E+02
Fe-55	3.26E+08	2.31E+08	5.39E+07	0.00E+00	0.00E+00	1.47E+08	1.00E+08
Fe-59	1.79E+08	4.18E+08	1.61E+08	0.00E+00	0.00E+00	1.32E+08	9.88E+08
Co-58	0.00E+00	4.36E+07	1.00E+08	0.00E+00	0.00E+00	0.00E+00	6.01E+08
Co-60	0.00E+00	2.49E+08	5.60E+08	0.00E+00	0.00E+00	0.00E+00	3.24E+09
Ni-63	1.61E+10	1.13E+09	5.45E+08	0.00E+00	0.00E+00	0.00E+00	1.81E+08
Ni-65	5.72E+01	7.31E+00	3.33E+00	0.00E+00	0.00E+00	0.00E+00	3.97E+02
Cu-64	0.00E+00	8.34E+03	3.92E+03	0.00E+00	2.11E+04	0.00E+00	6.47E+05
Zn-65	4.24E+08	1.47E+09	6.86E+08	0.00E+00	9.42E+08	0.00E+00	6.23E+08
Zn-69	8.18E-06	1.56E-05	1.09E-06	0.00E+00	1.02E-05	0.00E+00	2.87E-05
Br-83	0.00E+00	0.00E+00	2.91E+00	0.00E+00	0.00E+00	0.00E+00	0.00E+00
Br-84	0.00E+00	0.00E+00	2.25E-11	0.00E+00	0.00E+00	0.00E+00	0.00E+00
Br-85	0.00E+00	0.00E+00	0.00E+00	0.00E+00	0.00E+00	0.00E+00	0.00E+00
Rb-86	0.00E+00	2.74E+08	1.29E+08	0.00E+00	0.00E+00	0.00E+00	4.05E+07
Rb-88	0.00E+00	3.17E-22	1.69E-22	0.00E+00	0.00E+00	0.00E+00	2.71E-29
Rb-89	0.00E+00	1.25E-26	8.82E-27	0.00E+00	0.00E+00	0.00E+00	1.91E-35
Sr-89	1.51E+10	0.00E+00	4.33E+08	0.00E+00	0.00E+00	0.00E+00	1.80E+09
Sr-90	7.51E+11	0.00E+00	1.85E+11	0.00E+00	0.00E+00	0.00E+00	2.11E+10
Sr-91	2.85E+05	0.00E+00	1.13E+04	0.00E+00	0.00E+00	0.00E+00	1.29E+06
Sr-92	3.97E+02	0.00E+00	1.69E+01	0.00E+00	0.00E+00	0.00E+00	1.01E+04
Y-90	1.24E+04	0.00E+00	3.34E+02	0.00E+00	0.00E+00	0.00E+00	1.02E+08
Y-91m	4.86E-09	0.00E+00	1.86E-10	0.00E+00	0.00E+00	0.00E+00	2.29E-07
Y-91	7.84E+06	0.00E+00	2.10E+05	0.00E+00	0.00E+00	0.00E+00	3.21E+09
Y-92	8.60E-01	0.00E+00	2.49E-02	0.00E+00	0.00E+00	0.00E+00	2.36E+04
Y-93	1.59E+02	0.00E+00	4.36E+00	0.00E+00	0.00E+00	0.00E+00	4.86E+06
Zr-95	1.72E+06	5.43E+05	3.73E+05	0.00E+00	7.98E+05	0.00E+00	1.25E+09
Zr-97	3.12E+02	6.18E+01	2.85E+01	0.00E+00	9.37E+01	0.00E+00	1.67E+07
Nb-95	1.93E+05	1.07E+05	5.89E+04	0.00E+00	1.04E+05	0.00E+00	4.57E+08
Mo-99	0.00E+00	5.65E+06	1.08E+06	0.00E+00	1.29E+07	0.00E+00	1.01E+07
Tc-99m	2.74E+00	7.63E+00	9.89E+01	0.00E+00	1.14E+02	4.24E+00	5.01E+03
Tc-101	7.64E-31	1.09E-30	1.07E-29	0.00E+00	1.97E-29	6.62E-31	1.86E-37
Ru-103	6.81E+06	0.00E+00	2.91E+06	0.00E+00	2.40E+07	0.00E+00	5.69E+08
Ru-105	5.00E+01	0.00E+00	1.94E+01	0.00E+00	6.31E+02	0.00E+00	4.04E+04
Ru-106	3.10E+08	0.00E+00	3.90E+07	0.00E+00	5.97E+08	0.00E+00	1.48E+10
Ag-110m	1.52E+07	1.43E+07	8.72E+06	0.00E+00	2.74E+07	0.00E+00	4.03E+09
Sb-122	3.03E+05	5.89E+03	8.85E+04	3.85E+03	0.00E+00	1.89E+05	6.35E+07
Sb-124	1.54E+08	2.84E+06	6.02E+07	3.50E+05	0.00E+00	1.34E+08	3.11E+09
Sb-125	2.14E+08	2.34E+06	5.00E+07	2.04E+05	0.00E+00	1.86E+08	1.66E+09

Table 3-11b

TEEN INGESTION (Leafy Vegetable) Ri(V)

m^2 * mrem/yr per uCi/sec (H-3: m^3 mrem/yr per uCi/m^3)

Isotope	BONE	LIVER	TOT BODY	THYROID	KIDNEY	LUNG	GILLI
Te-125m	1.48E+08	5.34E+07	1.98E+07	4.14E+07	0.00E+00	0.00E+00	4.37E+08
Te-127m	5.51E+08	1.96E+08	6.56E+07	1.31E+08	2.24E+09	0.00E+00	1.37E+09
Te-127	5.34E+03	1.89E+03	1.15E+03	3.68E+03	2.16E+04	0.00E+00	4.12E+05
Te-129m	3.62E+08	1.34E+08	5.73E+07	1.17E+08	1.51E+09	0.00E+00	1.36E+09
Te-129	7.14E-04	2.66E-04	1.74E-04	5.10E-04	3.00E-03	0.00E+00	3.90E-03
Te-131m	8.44E+05	4.05E 05	3.38E+05	6.09E+05	4.22E+06	0.00E+00	3.25E+07
Te-131	1.39E-15	5.75E-16	4.36E-16	1.07E-15	6.10E-15	0.00E+00	1.14E-16
Te-132	3.91E+06	2.47E+06	2.33E+06	2.61E+06	2.37E+07	0.00E+00	7.84E+07
I-130	3.51E+05	1.01E+06	4.05E+05	8.28E+07	1.56E+06	0.00E+00	7.80E+05
I-131	7.69E+07	1.08E+08	5.78E+07	3.14E+10	1.85E+08	0.00E+00	2.13E+07
I-132	5.19E+01	1.36E+02	4.88E+01	4.58E+03	2.14E+02	0.00E+00	5.92E+01
I-133	1.94E+06	3.29E+06	1.00E+06	4.59E+08	5.76E+06	0.00E+00	2.49E+06
I-134	8.73E-05	2.31E-04	8.31E-05	3.85E-03	3.65E-04	0.00E+00	3.05E-06
I-135	3.52E+04	9.07E+04	3.36E+04	5.83E+06	1.43E+05	0.00E+00	1.00E+05
Cs-134	7.10E+09	1.67E+10	7.75E+09	0.00E+00	5.31E+09	2.03E+09	2.08E+08
Cs-136	4.34E+07	1.71E+08	1.15E+08	0.00E+00	9.30E+07	1.47E+07	1.37E+07
Cs-137	1.01E+10	1.35E+10	4.69E+09	0.00E+00	4.59E+09	1.78E+09	1.92E+08
Cs-138	3.61E-11	6.93E-11	3.47E-11	0.00E+00	5.12E-11	5.96E-12	3.15E-14
Ba-139	2.52E-02	1.78E-05	7.35E-04	0.00E+00	1.67E-05	1.22E-05	2.25E-01
Ba-140	1.37E+08	1.68E+05	8.85E+06	0.00E+00	5.70E+04	1.13E+05	2.12E+08
Ba-141	1.08E-21	8.04E-25	3.59E-23	0.00E+00	7.46E-25	5.50E-25	2.29E-27
Ba-142	2.27E-39	2.27E-42	1.40E-40	0.00E+00	1.92E-42	1.51E-42	0.00E+00
La-140	1.81E+03	8.89E+02	2.37E+02	0.00E+00	0.00E+00	0.00E+00	5.11E+07
La-142	1.30E-04	5.76E-05	1.43E-05	0.00E+00	0.00E+00	0.00E+00	1.75E+00
Ce-141	2.83E+05	1.89E+05	2.17E+04	0.00E+00	8.89E+04	0.00E+00	5.40E+08
Ce-143	9.33E+02	6.79E+05	7.58E+01	0.00E+00	3.04E+02	0.00E+00	2.04E+07
Ce-144	5.27E+07	2.18E+07	2.83E+06	0.00E+00	1.30E+07	0.00E+00	1.33E+10
Pr-143	7.00E+04	2.80E+04	3.49E+03	0.00E+00	1.63E+04	0.00E+00	2.30E+08
Pr-144	2.89E-26	1.18E-26	1.47E-27	0.00E+00	6.80E-27	0.00E+00	3.19E-29
Nd-147	3.62E+04	3.94E+04	2.36E+03	0.00E+00	2.31E+04	0.00E+00	1.42E+08
W-187	3.55E+04	2.90E+04	1.02E+04	0.00E+00	0.00E+00	0.00E+00	7.84E+06
Np-239	1.39E+03	1.31E+02	7.28E+01	0.00E+00	4.11E+02	0.00E+00	2.11E+07
K-40	0.00E+00	0.00E+00	0.00E+00	0.00E+00	0.00E+00	0.00E+00	0.00E+00
Co-57	0.00E+00	1.79E+07	3.00E+07	0.00E+00	0.00E+00	0.00E+00	3.33E+08
Sr-85	0.00E+00	0.00E+00	0.00E+00	0.00E+00	0.00E+00	0.00E+00	0.00E+00
Y-88	0.00E+00	0.00E+00	0.00E+00	0.00E+00	0.00E+00	0.00E+00	0.00E+00
Nb-94	0.00E+00	0.00E+00	0.00E+00	0.00E+00	0.00E+00	0.00E+00	0.00E+00
Nb-97	2.00E-06	4.95E-07	1.81E-07	0.00E+00	5.79E-07	0.00E+00	1.18E-02
Cd-109	0.00E+00	0.00E+00	0.00E+00	0.00E+00	0.00E+00	0.00E+00	0.00E+00
Sn-113	0.00E+00	0.00E+00	0.00E+00	0.00E+00	0.00E+00	0.00E+00	0.00E+00
Ba-133	0.00E+00	0.00E+00	0.00E+00	0.00E+00	0.00E+00	0.00E+00	0.00E+00
Te-134	3.23E-08	2.07E-08	2.17E-08	2.65E-08	1.98E-07	0.00E+00	1.20E-09
Ce-139	0.00E+00	0.00E+00	0.00E+00	0.00E+00	0.00E+00	0.00E+00	0.00E+00
Hg-203	0.00E+00	0.00E+00	0.00E+00	0.00E+00	0.00E+00	0.00E+00	0.00E+00

Table 3-11c

CHILD INGESTION (Leafy Vegetable) Ri(V)

m^2 * mrem/yr per uCi/sec (H-3: mrem/yr per uCi/m^3)

Isotope	BONE	LIVER	TOT BODY	THYROID	KIDNEY	LUNG	GILLI
H-3	0.00E+00	4.01E+03	4.01E+03	4.01E+03	4.01E+03	4.01E+03	4.01E+03
Be-7	3.37E+05	5.72E+05	3.77E+05	0.00E+00	5.63E+05	0.00E+00	3.20E+07
Na-24	3.73E+05	3.73E+05	3.73E+05	3.73E+05	3.73E+05	3.73E+05	3.73E+05
P-32	3.37E+09	1.58E+08	1.30E+08	0.00E+00	0.00E+00	0.00E+00	9.31E+07
Cr-51	0.00E+00	0.00E+00	1.17E+05	6.50E+04	1.78E+04	1.19E+05	6.21E+06
Mn-54	0.00E+00	6.65E+08	1.77E+08	0.00E+00	1.86E+08	0.00E+00	5.58E+08
Mn-56	0.00E+00	1.88E+01	4.24E+00	0.00E+00	2.27E+01	0.00E+00	2.72E+03
Fe-55	8.01E+08	4.25E+08	1.32E+08	0.00E+00	0.00E+00	2.40E+08	7.87E+07
Fe-59	3.97E+08	6.42E+08	3.20E+08	0.00E+00	0.00E+00	1.86E+08	6.68E+08
Co-58	0.00E+00	6.44E+07	1.97E+08	0.00E+00	0.00E+00	0.00E+00	3.76E+08
Co-60	0.00E+00	3.78E+08	1.12E+09	0.00E+00	0.00E+00	0.00E+00	2.10E+09
Ni-63	3.95E+10	2.11E+09	1.34E+09	0.00E+00	0.00E+00	0.00E+00	1.42E+08
Ni-65	1.05E+02	9.89E+00	5.77E+00	0.00E+00	0.00E+00	0.00E+00	1.21E+03
Cu-64	0.00E+00	1.10E+04	6.64E+03	0.00E+00	2.66E+04	0.00E+00	5.16E+05
Zn-65	8.12E+08	2.16E+09	1.35E+09	0.00E+00	1.36E+09	0.00E+00	3.80E+08
Zn-69	1.51E-05	2.18E-05	2.02E-06	0.00E+00	1.32E-05	0.00E+00	1.37E-03
Br-83	0.00E+00	0.00E+00	5.37E+00	0.00E+00	0.00E+00	0.00E+00	0.00E+00
Br-84	0.00E+00	0.00E+00	3.82E-11	0.00E+00	0.00E+00	0.00E+00	0.00E+00
Br-85	0.00E+00	0.00E+00	0.00E+00	0.00E+00	0.00E+00	0.00E+00	0.00E+00
Rb-86	0.00E+00	4.52E+08	2.78E+08	0.00E+00	0.00E+00	0.00E+00	2.91E+07
Rb-88	0.00E+00	4.37E-22	3.04E-22	0.00E+00	0.00E+00	0.00E+00	2.15E-23
Rb-89	0.00E+00	1.64E-26	1.46E-26	0.00E+00	0.00E+00	0.00E+00	1.43E-28
Sr-89	3.59E+10	0.00E+00	1.03E+09	0.00E+00	0.00E+00	0.00E+00	1.39E+09
Sr-90	1.24E+12	0.00E+00	3.15E+11	0.00E+00	0.00E+00	0.00E+00	1.67E+10
Sr-91	5.24E+05	0.00E+00	1.98E+04	0.00E+00	0.00E+00	0.00E+00	1.16E+06
Sr-92	7.28E+02	0.00E+00	2.92E+01	0.00E+00	0.00E+00	0.00E+00	1.38E+04
Y-90	2.30E+04	0.00E+00	6.17E+02	0.00E+00	0.00E+00	0.00E+00	6.56E+07
Y-91m	8.91E-09	0.00E+00	3.24E-10	0.00E+00	0.00E+00	0.00E+00	1.74E-05
Y-91	1.86E+07	0.00E+00	4.99E+05	0.00E+00	0.00E+00	0.00E+00	2.48E+09
Y-92	1.58E+00	0.00E+00	4.53E-02	0.00E+00	0.00E+00	0.00E+00	4.58E+04
Y-93	2.93E+02	0.00E+00	8.04E+00	0.00E+00	0.00E+00	0.00E+00	4.37E+06
Zr-95	3.86E+06	8.48E+05	7.55E+05	0.00E+00	1.21E+06	0.00E+00	8.84E+08
Zr-97	5.70E+02	8.24E+01	4.86E+01	0.00E+00	1.18E+02	0.00E+00	1.25E+07
Nb-95	4.12E+05	1.60E+05	1.15E+05	0.00E+00	1.51E+05	0.00E+00	2.97E+08
Mo-99	0.00E+00	7.71E+06	1.91E+06	0.00E+00	1.65E+07	0.00E+00	6.38E+06
Tc-99m	4.71E+00	9.24E+00	1.53E+02	0.00E+00	1.34E+02	4.69E+00	5.26E+03
Tc-101	1.41E-30	1.47E-30	1.87E-29	0.00E+00	2.51E-29	7.78E-31	4.68E-30
Ru-103	1.53E+07	0.00E+00	5.88E+06	0.00E+00	3.85E+07	0.00E+00	3.96E+08
Ru-105	9.16E+01	0.00E+00	3.32E+01	0.00E+00	8.05E+02	0.00E+00	5.98E+04
Ru-106	7.45E+08	0.00E+00	9.30E+07	0.00E+00	1.01E+09	0.00E+00	1.16E+10
Ag-110m	3.21E+07	2.17E+07	1.73E+07	0.00E+00	4.04E+07	0.00E+00	2.58E+09
Sb-122	5.58E+05	8.24E+03	1.64E+05	7.16E+03	0.00E+00	2.27E+05	4.30E+07
Sb-124	3.52E+08	4.56E+06	1.23E+08	7.73E+05	0.00E+00	1.95E+08	2.20E+09
Sb-125	4.99E+08	3.84E+06	1.05E+08	4.63E+05	0.00E+00	2.78E+08	1.19E+09

Table 3-11c

CHILD INGESTION (Leafy Vegetable) Ri(V)

m^2 * mrem/yr per uCi/sec (H-3: mrem/yr per uCi/m^3)

Isotope	BONE	LIVER	TOT BODY	THYROID	KIDNEY	LUNG	GILLI
Te-125m	3.51E+08	9.50E+07	4.67E+07	9.84E+07	0.00E+00	0.00E+00	3.38E+08
Te-127m	1.32E+09	3.56E+08	1.57E+08	3.16E+08	3.77E+09	0.00E+00	1.07E+09
Te-127	9.85E+03	2.65E+03	2.11E+03	6.81E+03	2.80E+04	0.00E+00	3.85E+05
Te-129m	8.41E+08	2.35E+08	1.31E+08	2.71E+08	2.47E+09	0.00E+00	1.03E+09
Te-129	1.32E-03	3.69E-04	3.14E-04	9.43E-04	3.87E-03	0.00E+00	8.23E-02
Te-131m	1.54E+06	5.33E+05	5.68E+05	1.10E+06	5.16E+06	0.00E+00	2.16E+07
Te-131	2.57E-15	7.83E-16	7.64E-16	1.97E-15	7.77E-15	0.00E+00	1.35E-14
Te-132	7.00E+06	3.10E+06	3.74E+06	4.51E+06	2.88E+07	0.00E+00	3.12E+07
I-130	6.16E+05	1.24E+06	6.41E+05	1.37E+08	1.86E+06	0.00E+00	5.82E+05
I-131	1.43E+08	1.44E+08	8.17E+07	4.75E+10	2.36E+08	0.00E+00	1.28E+07
I-132	9.22E+01	1.69E+02	7.79E+01	7.86E+03	2.59E+02	0.00E+00	1.99E+02
I-133	3.53E+06	4.37E+06	1.65E+06	8.11E+08	7.28E+06	0.00E+00	1.76E+06
I-134	1.55E-04	2.88E-04	1.32E-04	6.62E-03	4.40E-04	0.00E+00	1.91E-04
I-135	6.26E+04	1.13E+05	5.33E+04	9.97E+06	1.73E+05	0.00E+00	8.58E+04
Cs-134	1.60E+10	2.63E+10	5.55E+09	0.00E+00	8.15E+09	2.93E+09	1.42E+08
Cs-136	8.17E+07	2.25E+08	1.45E+08	0.00E+00	1.20E+08	1.78E+07	7.90E+06
Cs-137	2.39E+10	2.29E+10	3.38E+09	0.00E+00	7.46E+09	2.68E+09	1.43E+08
Cs-138	6.57E-11	9.13E-11	5.79E-11	0.00E+00	6.43E-11	6.91E-12	4.21E-11
Ba-139	4.65E-02	2.48E-05	1.35E-03	0.00E+00	2.17E-05	1.46E-05	2.69E+00
Ba-140	2.75E+08	2.41E+05	1.60E+07	0.00E+00	7.84E+04	1.44E+05	1.39E+08
Ba-141	1.99E-21	1.11E-24	6.47E-23	0.00E+00	9.62E-25	6.53E-24	1.13E-21
Ba-142	4.11E-39	2.96E-42	2.29E-40	0.00E+00	2.39E-42	1.74E-42	5.36E-41
La-140	3.25E+03	1.14E+03	3.83E+02	0.00E+00	0.00E+00	0.00E+00	3.17E+07
La-142	2.35E-04	7.49E-05	2.35E-05	0.00E+00	0.00E+00	0.00E+00	1.48E+01
Ce-141	6.56E+05	3.27E+05	4.86E+04	0.00E+00	1.43E+05	0.00E+00	4.08E+08
Ce-143	1.72E+03	9.31E+05	1.35E+02	0.00E+00	3.91E+02	0.00E+00	1.36E+07
Ce-144	1.27E+08	3.98E+07	6.78E+06	0.00E+00	2.21E+07	0.00E+00	1.04E+10
Pr-143	1.46E+05	4.37E+04	7.23E+03	0.00E+00	2.37E+04	0.00E+00	1.57E+08
Pr-144	5.37E-26	1.66E-26	2.70E-27	0.00E+00	8.79E-27	0.00E+00	3.58E-23
Nd-147	7.15E+04	5.79E+04	4.48E+03	0.00E+00	3.18E+04	0.00E+00	9.17E+07
W-187	6.47E+04	3.83E+04	1.72E+04	0.00E+00	0.00E+00	0.00E+00	5.38E+06
Np-239	2.57E+03	1.84E+02	1.29E+02	0.00E+00	5.33E+02	0.00E+00	1.36E+07
K-40	0.00E+00	0.00E+00	0.00E+00	0.00E+00	0.00E+00	0.00E+00	0.00E+00
Co-57	0.00E+00	2.99E+07	6.04E+07	0.00E+00	0.00E+00	0.00E+00	2.45E+08
Sr-85	0.00E+00	0.00E+00	0.00E+00	0.00E+00	0.00E+00	0.00E+00	0.00E+00
Y-88	0.00E+00	0.00E+00	0.00E+00	0.00E+00	0.00E+00	0.00E+00	0.00E+00
Nb-94	0.00E+00	0.00E+00	0.00E+00	0.00E+00	0.00E+00	0.00E+00	0.00E+00
Nb-97	3.64E-06	6.57E-07	3.07E-07	0.00E+00	7.29E-07	0.00E+00	2.03E-01
Cd-109	0.00E+00	0.00E+00	0.00E+00	0.00E+00	0.00E+00	0.00E+00	0.00E+00
Sn-113	0.00E+00	0.00E+00	0.00E+00	0.00E+00	0.00E+00	0.00E+00	0.00E+00
Ba-133	0.00E+00	0.00E+00	0.00E+00	0.00E+00	0.00E+00	0.00E+00	0.00E+00
Te-134	5.76E-08	2.59E-08	3.46E-08	4.56E-08	2.40E-07	0.00E+00	2.63E-07
Ce-139	0.00E+00	0.00E+00	0.00E+00	0.00E+00	0.00E+00	0.00E+00	0.00E+00
Hg-203	0.00E+00	0.00E+00	0.00E+00	0.00E+00	0.00E+00	0.00E+00	0.00E+00

Table 3-12a

ADULT GRASS/COW/MILK PATHWAY Ri(C)

m^2 * mrem/yr per uCi/sec (H-3: mrem/yr per uCi/m^3)

Isotope	BONE	LIVER	TOT BODY	THYROID	KIDNEY	LUNG	GILLI
H-3	0.00E+00	7.63E+02	7.63E+02	7.63E+02	7.63E+02	7.63E+02	7.63E+02
Be-7	1.65E+03	3.73E+03	1.85E+03	0.00E+00	3.92E+03	0.00E+00	6.44E+05
Na-24	2.44E+06	2.44E+06	2.44E+06	2.44E+06	2.44E+06	2.44E+06	2.44E+06
P-32	1.71E+10	1.06E+09	6.61E+08	0.00E+00	0.00E+00	0.00E+00	1.92E+09
Cr-51	0.00E+00	0.00E+00	2.86E+04	1.71E+04	6.30E+03	3.79E+04	7.19E+06
Mn-54	0.00E+00	8.41E+06	1.61E+06	0.00E+00	2.50E+06	0.00E+00	2.58E+07
Mn-56	0.00E+00	4.15E-03	7.36E-04	0.00E+00	5.27E-03	0.00E+00	1.32E-01
Fe-55	2.51E+07	1.74E+07	4.05E+06	0.00E+00	0.00E+00	9.68E+06	9.95E+06
Fe-59	2.97E+07	[illegible]98E+07	2.67E+07	0.00E+00	0.00E+00	1.95E+07	2.33E+08
Co-58	0.00E+00	4.71E+06	1.06E+07	0.00E+00	0.00E+00	0.00E+00	9.55E+07
Co-60	0.00E+00	1.64E+07	3.62E+07	0.00E+00	0.00E+00	0.00E+00	3.08E+08
Ni-63	6.73E+09	4.66E+08	2.26E+08	0.00E+00	0.00E+00	0.00E+00	9.73E+07
Ni-65	3.70E-01	4.81E-02	2.19E-02	0.00E+00	0.00E+00	0.00E+00	1.22E+00
Cu-64	0.00E+00	2.38E+04	1.12E+04	0.00E+00	6.01E+04	0.00E+00	2.03E+06
Zn-65	1.37E+09	4.36E+09	1.97E+09	0.00E+00	2.92E+09	0.00E+00	2.75E+09
Zn-69	5.18E-12	9.91E-12	6.89E-13	0.00E+00	6.44E-12	0.00E+00	1.49E-12
Br-83	0.00E+00	0.00E+00	9.72E-02	0.00E+00	0.00E+00	0.00E+00	1.40E-01
Br-84	0.00E+00	0.00E+00	1.61E-23	0.00E+00	0.00E+00	0.00E+00	1.26E-28
Br-85	0.00E+00	0.00E+00	0.00E+00	0.00E+00	0.00E+00	0.00E+00	0.00E+00
Rb-86	0.00E+00	2.59E+09	1.21E+09	0.00E+00	0.00E+00	0.00E+00	5.12E+08
Rb-88	0.00E+00	0.00E+00	0.00E+00	0.00E+00	0.00E+00	0.00E+00	0.00E+00
Rb-89	0.00E+00	0.00E+00	0.00E+00	0.00E+00	0.00E+00	0.00E+00	0.00E+00
Sr-89	1.45E+09	0.00E+00	4.16E+07	0.00E+00	0.00E+00	0.00E+00	2.33E+08
Sr-90	4.68E+10	0.00E+00	1.15E+10	0.00E+00	0.00E+00	0.00E+00	1.35E+09
Sr-91	2.89E+04	0.00E+00	1.17E+03	0.00E+00	0.00E+00	0.00E+00	1.38E+05
Sr-92	4.88E-01	0.00E+00	2.11E-02	0.00E+00	0.00E+00	0.00E+00	9.68E+00
Y-90	7.07E+01	0.00E+00	1.90E+00	0.00E+00	0.00E+00	0.00E+00	7.49E+05
Y-91m	5.98E-20	0.00E+00	2.32E-21	0.00E+00	0.00E+00	0.00E+00	1.76E-19
Y-91	8.59E+03	0.00E+00	2.30E+02	0.00E+00	0.00E+00	0.00E+00	4.73E+06
Y-92	5.58E-05	0.00E+00	1.63E-06	0.00E+00	0.00E+00	0.00E+00	9.77E-01
Y-93	2.23E-01	0.00E+00	6.17E-03	0.00E+00	0.00E+00	0.00E+00	7.08E+03
Zr-95	9.43E+02	3.02E+02	2.05E+02	0.00E+00	4.75E+02	0.00E+00	9.59E+05
Zr-97	4.33E-01	8.74E-02	4.00E-02	0.00E+00	1.32E-01	0.00E+00	2.71E+04
Nb-95	8.26E+04	4.60E+04	2.47E+04	0.00E+00	4.54E+04	0.00E+00	2.79E+08
Mo-99	0.00E+00	2.48E+07	4.71E+06	0.00E+00	5.61E+07	0.00E+00	5.74E+07
Tc-99m	3.32E+00	9.38E+00	1.20E+02	0.00E+00	1.43E+02	4.60E+00	5.55E+03
Tc-101	0.00E+00	0.00E+00	0.00E+00	0.00E+00	0.00E+00	0.00E+00	0.00E+00
Ru-103	1.02E+03	0.00E+00	4.38E+02	0.00E+00	3.88E+03	0.00E+00	1.19E+05
Ru-105	8.57E-04	0.00E+00	3.38E-04	0.00E+00	1.11E-02	0.00E+00	5.24E-01
Ru-106	2.04E+04	0.00E+00	2.58E+03	0.00E+00	3.94E+04	0.00E+00	1.32E+06
Ag-110m	5.82E+07	5.39E+07	3.20E+07	0.00E+00	1.06E+08	0.00E+00	2.20E+10
Sb-122	2.24E+05	5.16E+03	7.73E+04	3.47E+03	0.00E+00	1.35E+05	8.52E+07
Sb-124	2.57E+07	4.87E+05	1.01E+07	6.25E+04	0.00E+00	2.00E+07	7.31E+08
Sb-125	2.04E+07	2.28E+05	4.86E+06	2.08E+04	0.00E+00	1.58E+07	2.25E+08

Table 3-12a

ADULT GRASS/COW/MILK PATHWAY Ri(C)

m^2 * mrem/yr per uCi/sec (H-3: m^3 mrem/yr per uCi/m)

Isotope	BONE	LIVER	TOT BODY	THYROID	KIDNEY	LUNG	GILLI
Te-125m	1.63E+07	5.90E+06	2.18E+06	4.90E+06	6.63E+07	0.00E+00	6.50E+07
Te-127m	4.58E+07	1.64E+07	5.58E+06	1.17E+07	1.86E+08	0.00E+00	1.54E+08
Te-127	6.53E+02	2.34E+02	1.41E+02	4.84E+02	2.66E+03	0.00E+00	5.15E+04
Te-129m	6.02E+07	2.25E+07	9.53E+06	2.07E+07	2.51E+08	0.00E+00	3.03E+08
Te-129	2.82E-10	1.06E-10	6.88E-11	2.17E-10	1.19E-09	0.00E+00	2.13E-10
Te-131m	3.61E+05	1.77E+05	1.47E+05	2.80E+05	1.79E+06	0.00E+00	1.75E+07
Te-131	3.60E-33	1.51E-33	1.14E-33	2.96E-33	1.58E-32	0.00E+00	5.10E-34
Te-132	2.40E+06	1.55E+06	1.46E+06	1.72E+06	1.50E+07	0.00E+00	7.35E+07
I-130	4.20E+05	1.24E+06	4.8[illegible]E+05	1.05E+08	1.93E+06	0.00E+00	1.07E+06
I-131	2.96E+08	4.23E+08	2.43E+08	1.39E+11	7.26E+08	0.00E+00	1.12E+08
I-132	1.64E-01	4.39E-01	1.54E-01	1.54E+01	7.00E-01	0.00E+00	8.25E-02
I-133	3.87E+06	6.73E+06	2.05E+06	9.89E+08	1.17E+07	0.00E+00	6.05E+06
I-134	2.02E-12	5.48E-12	1.96E-12	9.4[illegible]E-11	8.71E-12	0.00E+00	4.77E-15
I-135	1.28E+04	3.36E+04	1.24E+04	2.22E+06	5.39E+04	0.00E+00	3.80E+04
Cs-134	5.65E+09	1.35E+10	1.10E+10	0.00E+00	4.35E+09	1.45E+09	2.35E+08
Cs-136	2.63E+08	1.04E+09	7.46E+08	0.00E+00	5.77E+08	7.90E+07	1.18E+08
Cs-137	7.38E+09	1.01E+10	6.61E+09	0.00E+00	3.43E+09	1.14E+09	1.95E+08
Cs-138	9.04E-24	1.79E-23	8.85E-24	0.00E+00	1.31E-23	1.30E-24	7.62E-29
Ba-139	3.92E-08	2.79E-11	1.15E-09	0.00E+00	2.61E-11	1.58E-11	6.94E-08
Ba-140	2.68E+07	3.37E+04	1.76E+06	0.00E+00	1.15E+04	1.93E+04	5.52E+07
Ba-141	0.00E+00	0.00E+00	0.00E+00	0.00E+00	0.00E+00	0.00E+00	0.00E+00
Ba-142	0.00E+00	0.00E+00	0.00E+00	0.00E+00	0.00E+00	0.00E+00	0.00E+00
La-140	4.52E+00	2.28E+00	6.02E-01	0.00E+00	0.00E+00	0.00E+00	1.67E+05
La-142	9.34E-12	4.25E-12	1.06E-12	0.00E+00	0.00E+00	0.00E+00	3.10E-08
Ce-141	4.84E+03	3.28E+03	3.72E+02	0.00E+00	1.52E+03	0.00E+00	1.25E+07
Ce-143	4.16E+01	3.07E+04	3.40E+00	0.00E+00	1.35E+01	0.00E+00	1.15E+06
Ce-144	3.58E+05	1.50E+05	1.92E+04	0.00E+00	8.87E+04	0.00E+00	1.21E+08
Pr-143	1.58E+02	6.33E+01	7.83E+00	0.00E+00	3.66E+01	0.00E+00	6.92E+05
Pr-144	0.00E+00	0.00E+00	0.00E+00	0.00E+00	0.00E+00	0.00E+00	0.00E+00
Nd-147	9.42E+01	1.09E+02	6.51E+00	0.00E+00	6.36E+01	0.00E+00	5.22E+05
W-187	6.56E+03	5.48E+03	1.92E+03	0.00E+00	0.00E+00	0.00E+00	1.80E+06
Np-239	3.68E+00	3.62E-01	2.00E-01	0.00E+00	1.13E+00	0.00E+00	7.43E+04
K-40	0.00E+00	0.00E+00	0.00E+00	0.00E+00	0.00E+00	0.00E+00	0.00E+00
Co-57	0.00E+00	1.28E+06	2.13E+06	0.00E+00	0.00E+00	0.00E+00	3.25E+07
Sr-85	0.00E+00	0.00E+00	0.00E+00	0.00E+00	0.00E+00	0.00E+00	0.00E+00
Y-88	0.00E+00	0.00E+00	0.00E+00	0.00E+00	0.00E+00	0.00E+00	0.00E+00
Nb-94	0.00E+00	0.00E+00	0.00E+00	0.00E+00	0.00E+00	0.00E+00	0.00E+00
Nb-97	3.29E-12	8.32E-13	3.04E-13	0.00E+00	9.71E-13	0.00E+00	3.07E-09
Cd-109	0.00E+00	0.00E+00	0.00E+00	0.00E+00	0.00E+00	0.00E+00	0.00E+00
Sn-113	0.00E+00	0.00E+00	0.00E+00	0.00E+00	0.00E+00	0.00E+00	0.00E+00
Ba-133	0.00E+00	0.00E+00	0.00E+00	0.00E+00	0.00E+00	0.00E+00	0.00E+00
Te-134	8.90E-19	5.83E-19	3.57E-19	7.78E-19	5.63E-18	0.00E+00	9.87E-22
Ce-139	0.00E+00	0.00E+00	0.00E+00	0.00E+00	0.00E+00	0.00E+00	0.00E+00
Hg-203	0.00E+00	0.00E+00	0.00E+00	0.00E+00	0.00E+00	0.00E+00	0.00E+00

Table 3-12b

TEEN GRASS/COW/MILK PATHWAY Ri(C)

m^2 * mrem/yr per uCi/sec (H-3: mrem/yr per uCi/m^3)

Isotope	BONE	LIVER	TOT BODY	THYROID	KIDNEY	LUNG	GILLI
H-3	0.00E+00	9.94E+02	9.94E+02	9.94E+02	9.94E+02	9.94E+02	9.94E+02
Be-7	3.05E+03	6.83E+03	3.41E+03	0.00E+00	7.23E+03	0.00E+00	8.31E+05
Na-24	4.26E+06	4.26E+06	4.26E+06	4.26E+06	4.26E+06	4.26E+06	4.26E+06
P-32	3.15E+10	1.95E+09	1.22E+09	0.00E+00	0.00E+00	0.00E+00	2.65E+09
Cr-51	0.00E+00	0.00E+00	4.99E+04	2.77E+04	1.09E+04	7.13E+04	8.39E+06
Mn-54	0.00E+00	1.40E+07	2.78E+06	0.00E+00	4.18E+06	0.00E+00	2.87E+07
Mn-56	0.00E+00	7.36E-03	1.31E-03	0.00E+00	9.31E-03	0.00E+00	4.84E-01
Fe-55	4.45E+07	3.16E+07	7.36E+06	0.00E+00	0.00E+00	2.00E+07	1.37E+07
Fe-59	5.18E+07	1.21E+08	4.67E+07	0.00E+00	0.00E+00	3.81E+07	2.86E+08
Co-58	0.00E+00	7.94E+06	1.83E+07	0.00E+00	0.00E+00	0.00E+00	1.09E+08
Co-60	0.00E+00	2.78E+07	6.26E+07	0.00E+00	0.00E+00	0.00E+00	3.62E+08
Ni-63	1.18E+10	8.35E+08	4.01E+08	0.00E+00	0.00E+00	0.00E+00	1.33E+08
Ni-65	6.77E-01	8.65E-02	3.94E-02	0.00E+00	0.00E+00	0.00E+00	4.69E+00
Cu-64	0.00E+00	4.25E+04	2.00E+04	0.00E+00	1.07E+05	0.00E+00	3.29E+06
Zn-65	2.11E+09	7.31E+09	3.41E+09	0.00E+00	4.68E+09	0.00E+00	3.10E+09
Zn-69	9.55E-12	1.82E-11	1.27E-12	0.00E+00	1.19E-11	0.00E+00	3.35E-11
Br-83	0.00E+00	0.00E+00	1.79E-01	0.00E+00	0.00E+00	0.00E+00	0.00E+00
Br-84	0.00E+00	0.00E+00	2.88E-23	0.00E+00	0.00E+00	0.00E+00	0.00E+00
Br-85	0.00E+00	0.00E+00	0.00E+00	0.00E+00	0.00E+00	0.00E+00	0.00E+00
Rb-86	0.00E+00	4.73E+09	2.22E+09	0.00E+00	0.00E+00	0.00E+00	7.00E+08
Rb-88	0.00E+00	0.00E+00	0.00E+00	0.00E+00	0.00E+00	0.00E+00	0.00E+00
Rb-89	0.00E+00	0.00E+00	0.00E+00	0.00E+00	0.00E+00	0.00E+00	0.00E+00
Sr-89	2.67E+09	0.00E+00	7.66E+07	0.00E+00	0.00E+00	0.00E+00	3.18E+08
Sr-90	6.61E+10	0.00E+00	1.63E+10	0.00E+00	0.00E+00	0.00E+00	1.86E+09
Sr-91	5.31E+04	0.00E+00	2.11E+03	0.00E+00	0.00E+00	0.00E+00	2.41E+05
Sr-92	8.94E-01	0.00E+00	3.81E-02	0.00E+00	0.00E+00	0.00E+00	2.28E+01
Y-90	1.30E+02	0.00E+00	3.50E+00	0.00E+00	0.00E+00	0.00E+00	1.07E+06
Y-91m	1.10E-19	0.00E+00	4.19E-21	0.00E+00	0.00E+00	0.00E+00	5.17E-18
Y-91	1.58E+04	0.00E+00	4.24E+02	0.00E+00	0.00E+00	0.00E+00	6.48E+06
Y-92	1.03E-04	0.00E+00	2.98E-06	0.00E+00	0.00E+00	0.00E+00	2.83E+00
Y-93	4.12E-01	0.00E+00	1.13E-02	0.00E+00	0.00E+00	0.00E+00	1.26E+04
Zr-95	1.65E+03	5.20E+02	3.58E+02	0.00E+00	7.65E+02	0.00E+00	1.20E+06
Zr-97	7.88E-01	1.56E-01	7.19E-02	0.00E+00	2.37E-01	0.00E+00	4.22E+04
Nb-95	1.41E+05	7.82E+04	4.30E+04	0.00E+00	7.58E+04	0.00E+00	3.34E+08
Mo-99	0.00E+00	4.47E+07	8.52E+06	0.00E+00	1.02E+08	0.00E+00	8.01E+07
Tc-99m	5.76E+00	1.61E+01	2.08E+02	0.00E+00	2.39E+02	8.92E+00	1.05E+04
Tc-101	0.00E+00	0.00E+00	0.00E+00	0.00E+00	0.00E+00	0.00E+00	0.00E+00
Ru-103	1.81E+03	0.00E+00	7.74E+02	0.00E+00	6.38E+03	0.00E+00	1.51E+05
Ru-105	1.56E-03	0.00E+00	6.07E-04	0.00E+00	1.97E-02	0.00E+00	1.26E+00
Ru-106	3.75E+04	0.00E+00	4.73E+03	0.00E+00	7.24E+04	0.00E+00	1.80E+06
Ag-110m	9.63E+07	9.11E+07	5.54E+07	0.00E+00	1.74E+08	0.00E+00	2.56E+10
Sb-122	4.77E+05	9.29E+03	1.39E+05	6.06E+03	0.00E+00	2.98E+05	1.00E+08
Sb-124	4.58E+07	8.44E+05	1.79E+07	1.04E+05	0.00E+00	4.00E+07	9.26E+08
Sb-125	3.65E+07	3.99E+05	8.53E+06	3.48E+04	0.00E+00	3.18E+07	2.83E+08

Table 3-12b

TEEN GRASS/COW/MILK PATHWAY Ri(C)

m^2 * mrem/yr per uCi/sec (H-3: mrem/yr per uCi/m^3)

Isotope	BONE	LIVER	TOT BODY	THYROID	KIDNEY	LUNG	GILLI
Te-125m	3.00E+07	1.08E+07	4.02E+06	8.39E+06	0.00E+00	0.00E+00	8.86E+07
Te-127m	8.44E+07	2.99E+07	1.00E+07	2.01E+07	3.42E+08	0.00E+00	2.10E+08
Te-127	1.21E+03	4.29E+02	2.60E+02	8.35E+02	4.90E+03	0.00E+00	9.34E+04
Te-129m	1.10E+08	4.09E+07	1.74E+07	3.55E+07	4.61E+08	0.00E+00	4.13E+08
Te-129	5.20E-10	1.94E-10	1.26E-10	3.71E-10	2.18E-09	0.00E+00	2.84E-09
Te-131m	6.57E+05	3.15E+05	2.63E+05	4.74E+05	3.29E+06	0.00E+00	2.53E+07
Te-131	6.58E-33	2.71E-33	2.06E-33	5.07E-33	2.88E-32	0.00E+00	5.40E-34
Te-132	4.29E+06	2.72E+06	2.56E+06	2.87E+06	2.61E+07	0.00E+00	8.61E+07
I-130	7.38E+05	2.14E+06	8.53E+05	1.74E+08	3.29E+06	0.00E+00	1.64E+06
I-131	5.37E+08	7.52E+08	4.04E+08	2.19E+11	1.29E+09	0.00E+00	1.49E+08
I-132	2.91E-01	7.62E-01	2.74E-01	2.57E+01	1.20E+00	0.00E+00	3.32E-01
I-133	7.07E+06	1.20E+07	3.66E+06	1.67E+09	2.10E+07	0.00E+00	9.07E+06
I-134	3.58E-12	9.50E-12	3.41E-12	1.58E-10	1.50E-11	0.00E+00	1.25E-13
I-135	2.28E+04	5.87E+04	2.18E+04	3.78E+06	9.27E+04	0.00E+00	6.51E+04
Cs-134	9.82E+09	2.31E+10	1.07E+10	0.00E+00	7.34E+09	2.80E+09	2.87E+08
Cs-136	4.47E+08	1.76E+09	1.18E+09	0.00E+00	9.57E+08	1.51E+08	1.42E+08
Cs-137	1.34E+10	1.78E+10	6.20E+09	0.00E+00	6.06E+09	2.35E+09	2.53E+08
Cs-138	1.64E-23	3.15E-23	1.57E-23	0.00E+00	2.33E-23	2.71E-24	1.43E-26
Ba-139	7.24E-08	5.09E-11	2.11E-09	0.00E+00	4.80E-11	3.51E-11	6.46E-07
Ba-140	4.84E+07	5.93E+04	3.12E+06	0.00E+00	2.01E+04	3.99E+04	7.46E+07
Ba-141	0.00E+00	0.00E+00	0.00E+00	0.00E+00	0.00E+00	0.00E+00	0.00E+00
Ba-142	0.00E+00	0.00E+00	0.00E+00	0.00E+00	0.00E+00	0.00E+00	0.00E+00
La-140	8.12E+00	3.99E+00	1.06E+00	0.00E+00	0.00E+00	0.00E+00	2.29E+05
La-142	1.69E-11	7.49E-12	1.86E-12	0.00E+00	0.00E+00	0.00E+00	2.28E-07
Ce-141	8.88E+03	5.93E+03	6.81E+02	0.00E+00	2.79E+03	0.00E+00	1.70E+07
Ce-143	7.64E+01	5.56E+04	6.21E+00	0.00E+00	2.49E+01	0.00E+00	1.67E+06
Ce-144	6.58E+05	2.72E+05	3.54E+04	0.00E+00	1.63E+05	0.00E+00	1.66E+08
Pr-143	2.90E+02	1.16E+02	1.44E+01	0.00E+00	6.73E+01	0.00E+00	9.54E+05
Pr-144	0.00E+00	0.00E+00	0.00E+00	0.00E+00	0.00E+00	0.00E+00	0.00E+00
Nd-147	1.81E+02	1.97E+02	1.18E+01	0.00E+00	1.16E+02	0.00E+00	7.11E+05
W-187	1.20E+04	9.78E+03	3.43E+03	0.00E+00	0.00E+00	0.00E+00	2.65E+06
Np-239	7.03E+00	6.63E-01	3.68E-01	0.00E+00	2.08E+00	0.00E+00	1.07E+05
K-40	0.00E+00	0.00E+00	0.00E+00	0.00E+00	0.00E+00	0.00E+00	0.00E+00
Co-57	0.00E+00	2.25E+06	3.76E+06	0.00E+00	0.00E+00	0.00E+00	4.19E+07
Sr-85	0.00E+00	0.00E+00	0.00E+00	0.00E+00	0.00E+00	0.00E+00	0.00E+00
Y-88	0.00E+00	0.00E+00	0.00E+00	0.00E+00	0.00E+00	0.00E+00	0.00E+00
Nb-94	0.00E+00	0.00E+00	0.00E+00	0.00E+00	0.00E+00	0.00E+00	0.00E+00
Nb-97	5.99E-12	1.49E-12	5.43E-13	0.00E+00	1.74E-12	0.00E+00	3.55E-08
Cd-109	0.00E+00	0.00E+00	0.00E+00	0.00E+00	0.00E+00	0.00E+00	0.00E+00
Sn-113	0.00E+00	0.00E+00	0.00E+00	0.00E+00	0.00E+00	0.00E+00	0.00E+00
Ba-133	0.00E+00	0.00E+00	0.00E+00	0.00E+00	0.00E+00	0.00E+00	0.00E+00
Te-134	1.59E-18	1.02E-18	1.06E-18	1.30E-18	9.72E-18	0.00E+00	5.89E-20
Ce-139	0.00E+00	0.00E+00	0.00E+00	0.00E+00	0.00E+00	0.00E+00	0.00E+00
Hg-203	0.00E+00	0.00E+00	0.00E+00	0.00E+00	0.00E+00	0.00E+00	0.00E+00

Table 3-12c

CHILD GRASS/COW/MILK PATHWAY Ri(C)

m^2 * mrem/yr per uCi/sec (H-3: mrem/yr per uCi/m^3)

Isotope	BONE	LIVER	TOT BODY	THYROID	KIDNEY	LUNG	GILLI
H-3	0.00E+00	1.57E+03	1.57E+03	1.57E+03	1.57E+03	1.57E+03	1.57E+03
Be-7	7.49E+03	1.27E+04	8.38E+03	0.00E+00	1.25E+04	0.00E+00	7.11E+05
Na-24	8.85E+06	8.85E+06	8.85E+06	8.85E+06	8.85E+06	8.85E+06	8.85E+06
P-32	7.78E+10	3.64E+09	3.00E+09	0.00E+00	0.00E+00	0.00E+00	2.15E+09
Cr-51	0.00E+00	0.00E+00	1.02E+05	5.65E+04	1.54E+04	1.03E+05	5.40E+06
Mn-54	0.00E+00	2.10E+07	5.59E+06	0.00E+00	5.88E+06	0.00E+00	1.76E+07
Mn-56	0.00E+00	1.28E-02	2.90E-03	0.00E+00	1.55E-02	0.00E+00	1.86E+00
Fe-55	1.12E+08	5.93E+07	1.84E+07	0.00E+00	0.00E+00	3.35E+07	1.10E+07
Fe-59	1.20E+08	1.94E+08	9.68E+07	0.00E+00	0.00E+00	5.64E+07	2.02E+08
Co-58	0.00E+00	1.21E+07	3.71E+07	0.00E+00	0.00E+00	0.00E+00	7.07E+07
Co-60	0.00E+00	4.32E+07	1.27E+08	0.00E+00	0.00E+00	0.00E+00	2.39E+08
Ni-63	2.96E+10	1.59E+09	1.01E+09	0.00E+00	0.00E+00	0.00E+00	1.07E+08
Ni-65	1.66E+00	1.56E-01	9.10E-02	0.00E+00	0.00E+00	0.00E+00	1.91E+01
Cu-64	0.00E+00	7.46E+04	4.51E+04	0.00E+00	1.80E+05	0.00E+00	3.50E+06
Zn-65	4.13E+09	1.10E+10	6.85E+09	0.00E+00	6.94E+09	0.00E+00	1.93E+09
Zn-69	2.35E-11	3.39E-11	3.13E-12	0.00E+00	2.06E-11	0.00E+00	2.14E-09
Br-83	0.00E+00	0.00E+00	4.40E-01	0.00E+00	0.00E+00	0.00E+00	0.00E+00
Br-84	0.00E+00	0.00E+00	6.51E-23	0.00E+00	0.00E+00	0.00E+00	0.00E+00
Br-85	0.00E+00	0.00E+00	0.00E+00	0.00E+00	0.00E+00	0.00E+00	0.00E+00
Rb-86	0.00E+00	8.77E+09	5.39E+09	0.00E+00	0.00E+00	0.00E+00	5.64E+08
Rb-88	0.00E+00	0.00E+00	0.00E+00	0.00E+00	0.00E+00	0.00E+00	0.00E+00
Rb-89	0.00E+00	0.00E+00	0.00E+00	0.00E+00	0.00E+00	0.00E+00	0.00E+00
Sr-89	6.62E+09	0.00E+00	1.89E+08	0.00E+00	0.00E+00	0.00E+00	2.56E+08
Sr-90	1.12E+11	0.00E+00	2.83E+10	0.00E+00	0.00E+00	0.00E+00	1.51E+09
Sr-91	1.30E+05	0.00E+00	4.92E+03	0.00E+00	0.00E+00	0.00E+00	2.88E+05
Sr-92	2.18E+00	0.00E+00	8.75E-02	0.00E+00	0.00E+00	0.00E+00	4.13E+01
Y-90	3.21E+02	0.00E+00	8.60E+00	0.00E+00	0.00E+00	0.00E+00	9.15E+05
Y-91m	2.68E-19	0.00E+00	9.74E-21	0.00E+00	0.00E+00	0.00E+00	5.24E-16
Y-91	3.90E+04	0.00E+00	1.04E+03	0.00E+00	0.00E+00	0.00E+00	5.20E+06
Y-92	2.53E-04	0.00E+00	7.24E-06	0.00E+00	0.00E+00	0.00E+00	7.31E+00
Y-93	1.01E+00	0.00E+00	2.78E-02	0.00E+00	0.00E+00	0.00E+00	1.51E+04
Zr-95	3.83E+03	8.42E+02	7.50E+02	0.00E+00	1.21E+03	0.00E+00	8.79E+05
Zr-97	1.92E+00	2.77E-01	1.64E-01	0.00E+00	3.98E-01	0.00E+00	4.20E+04
Nb-95	3.18E+05	1.24E+05	8.85E+04	0.00E+00	1.16E+05	0.00E+00	2.29E+08
Mo-99	0.00E+00	8.13E+07	2.01E+07	0.00E+00	1.74E+08	0.00E+00	6.73E+07
Tc-99m	1.32E+01	2.59E+01	4.29E+02	0.00E+00	3.76E+02	1.32E+01	1.47E+04
Tc-101	0.00E+00	0.00E+00	0.00E+00	0.00E+00	0.00E+00	0.00E+00	0.00E+00
Ru-103	4.28E+03	0.00E+00	1.65E+03	0.00E+00	1.08E+04	0.00E+00	1.11E+05
Ru-105	3.82E-03	0.00E+00	1.39E-03	0.00E+00	3.36E-02	0.00E+00	2.49E+00
Ru-106	9.24E+04	0.00E+00	1.15E+04	0.00E+00	1.25E+05	0.00E+00	1.44E+06
Ag-110m	2.09E+08	1.41E+08	1.13E+08	0.00E+00	2.63E+08	0.00E+00	1.68E+10
Sb-122	1.17E+06	1.73E+04	3.44E+05	1.50E+04	0.00E+00	4.77E+05	9.02E+07
Sb-124	1.09E+08	1.41E+06	3.80E+07	2.39E+05	0.00E+00	6.02E+07	6.78E+08
Sb-125	8.69E+07	6.70E+05	1.82E+07	8.06E+04	0.00E+00	4.84E+07	2.08E+08

Table 3-12c

CHILD GRASS/COW/MILK PATHWAY Ri(C)

m^2 * mrem/yr per uCi/sec (H-3: mrem/yr per uCi/m^3)

Isotope	BONE	LIVER	TOT BODY	THYROID	KIDNEY	LUNG	GILLI
Te-125m	7.38E+07	2.00E+07	9.84E+06	2.07E+07	0.00E+00	0.00E+00	7.12E+07
Te-127m	2.08E+08	5.60E+07	2.47E+07	4.97E+07	5.93E+08	0.00E+00	1.68E+08
Te-127	2.98E+03	8.02E+02	6.38E+02	2.06E+03	8.47E+03	0.00E+00	1.16E+05
Te-129m	2.71E+08	7.58E+07	4.21E+07	8.75E+07	7.97E+08	0.00E+00	3.31E+08
Te-129	1.28E-09	3.58E-10	3.04E-10	9.15E-10	3.75E-09	0.00E+00	7.98E-08
Te-131m	1.60E+06	5.53E+05	5.89E+05	1.14E+06	5.35E+06	0.00E+00	2.24E+07
Te-131	1.62E-32	4.93E-33	4.81E-33	1.24E-32	4.89E-32	0.00E+00	8.49E-32
Te-132	1.02E+07	4.53E+06	5.48E+06	6.60E+06	4.21E+07	0.00E+00	4.57E+07
I-130	1.73E+06	3.49E+06	1.80E+06	3.84E+08	5.22E+06	0.00E+00	1.63E+06
I-131	1.30E+09	1.31E+09	7.45E+08	4.33E+11	2.15E+09	0.00E+00	1.17E+08
I-132	6.89E-01	1.27E+00	5.82E-01	5.87E+01	1.94E+00	0.00E+00	1.49E+00
I-133	1.72E+07	2.12E+07	8.03E+06	3.94E+09	3.54E+07	0.00E+00	8.56E+06
I-134	8.48E-12	1.58E-11	7.25E-12	3.62E-10	2.41E-11	0.00E+00	1.04E-11
I-135	5.40E+04	9.72E+04	4.60E+04	8.61E+06	1.49E+05	0.00E+00	7.40E+04
Cs-134	2.26E+10	3.72E+10	7.84E+09	0.00E+00	1.15E+10	4.13E+09	2.00E+08
Cs-136	1.01E+09	2.77E+09	1.79E+09	0.00E+00	1.48E+09	2.20E+08	9.74E+07
Cs-137	3.22E+10	3.09E+10	4.55E+09	0.00E+00	1.01E+10	3.62E+09	1.93E+08
Cs-138	3.98E-23	5.53E-23	3.51E-23	0.00E+00	3.89E-23	4.19E-24	2.55E-23
Ba-139	1.78E-07	9.50E-11	5.16E-09	0.00E+00	8.29E-11	5.59E-11	1.03E-05
Ba-140	1.17E+08	1.02E+05	6.82E+06	0.00E+00	3.33E+04	6.10E+04	5.92E+07
Ba-141	0.00E+00	0.00E+00	0.00E+00	0.00E+00	0.00E+00	0.00E+00	0.00E+00
Ba-142	0.00E+00	0.00E+00	0.00E+00	0.00E+00	0.00E+00	0.00E+00	0.00E+00
La-140	1.94E+01	6.80E+00	2.29E+00	0.00E+00	0.00E+00	0.00E+00	1.89E+05
La-142	4.07E-11	1.30E-11	4.06E-12	0.00E+00	0.00E+00	0.00E+00	2.57E-06
Ce-141	2.19E+04	1.09E+04	1.62E+03	0.00E+00	4.78E+03	0.00E+00	1.36E+07
Ce-143	1.87E+02	1.02E+05	1.47E+01	0.00E+00	4.26E+01	0.00E+00	1.49E+06
Ce-144	1.62E+06	5.09E+05	8.66E+04	0.00E+00	2.82E+05	0.00E+00	1.33E+08
r-143	7.18E+02	2.16E+02	3.56E+01	0.00E+00	1.17E+0[illegible]	0.00E+00	7.75E+05
Pr-144	0.00E+00	0.00E+00	0.00E+00	0.00E+00	0.00E+00	0.00E+00	0.00E+00
Nd-147	4.45E+02	3.60E+02	2.79E+01	0.00E+00	1.98E+02	0.00E+00	5.70E+05
W-187	2.91E+04	1.72E+04	7.73E+03	0.00E+00	0.00E+00	0.00E+00	2.42E+06
Np-239	1.73E+01	1.24E+00	8.73E-01	0.00E+00	3.59E+00	0.00E+00	9.19E+04
K-40	0.00E+00	0.00E+00	0.00E+00	0.00E+00	0.00E+00	0.00E+00	0.00E+00
Co-57	0.00E+00	3.84E+06	7.77E+06	0.00E+00	0.00E+00	0.00E+00	3.14E+07
Sr-85	0.00E+00	0.00E+00	0.00E+00	0.00E+00	0.00E+00	0.00E+00	0.00E+00
Y-88	0.00E+00	0.00E+00	0.00E+00	0.00E+00	0.00E+00	0.00E+00	0.00E+00
Nb-94	0.00E+00	0.00E+00	0.00E+00	0.00E+00	0.00E+00	0.00E+00	0.00E+00
Nb-97	1.46E-11	2.63E-12	1.23E-12	0.00E+00	2.92E-12	0.00E+00	8.12E-07
Cd-109	0.00E+00	0.00E+00	0.00E+00	0.00E+00	0.00E+00	0.00E+00	0.00E+00
Sn-113	0.00E+00	0.00E+00	0.00E+00	0.00E+00	0.00E+00	0.00E+00	0.00E+00
Ba-133	0.00E+00	0.00E+00	0.00E+00	0.00E+00	0.00E+00	0.00E+00	0.00E+00
Te-134	3.77E-18	1.70E-18	2.26E-18	2.98E-18	1.57E-17	0.00E+00	1.72E-17
Ce-139	0.00E+00	0.00E+00	0.00E+00	0.00E+00	0.00E+00	0.00E+00	0.00E+00
Hg-203	0.00E+00	0.00E+00	0.00E+00	0.00E+00	0.00E+00	0.00E+00	0.00E+00

Table 3-12d

INFANT GRASS/COW/MILK PATHWAY Ri(C)

m^2 * mrem/yr per uCi/sec (H-3: mrem/yr per uCi/m^3)

Isotope	BONE	LIVER	TOT BODY	THYROID	KIDNEY	LUNG	GILLI
H-3	0.00E+00	2.38E+03	2.38E+03	2.38E+03	2.38E+03	2.38E+03	2.38E+03
Be-7	1.43E+04	3.00E+04	1.59E+04	0.00E+00	2.12E+04	0.00E+00	7.05E+05
Na-24	1.54E+07	1.54E+07	1.54E+07	1.54E+07	1.54E+07	1.54E+07	1.54E+07
P-32	1.60E+11	9.43E+09	6.21E+09	0.00E+00	0.00E+00	0.00E+00	2.17E+09
Cr-51	0.00E+00	0.00E+00	1.61E+05	1.05E+05	2.30E+04	2.05E+05	4.70E+06
Mn-54	0.00E+00	3.90E+07	8.84E+06	0.00E+00	8.64E+06	0.00E+00	1.43E+07
Mn-56	0.00E+00	3.14E-02	5.42E-03	0.00E+00	2.70E-02	0.00E+00	2.85E+00
Fe-55	1.35E+08	8.73E+07	2.33E+07	0.00E+00	0.00E+00	4.27E+07	1.11E+07
Fe-59	2.24E+08	3.92E+08	1.54E+08	0.00E+00	0.00E+00	1.16E+08	1.87E+08
Co-58	0.00E+00	2.42E+07	6.05E+07	0.00E+00	0.00E+00	0.00E+00	6.04E+07
Co-60	0.00E+00	8.82E+07	2.08E+08	0.00E+00	0.00E+00	0.00E+00	2.10E+08
Ni-63	3.49E+10	2.16E+09	1.21E+09	0.00E+00	0.00E+00	0.00E+00	1.07E+08
Ni-65	3.50E+00	3.97E-01	1.80E-01	0.00E+00	0.00E+00	0.00E+00	3.02E+01
Cu-64	0.00E+00	1.86E+05	8.59E+04	0.00E+00	3.14E+05	0.00E+00	3.81E+06
Zn-65	5.55E+09	1.90E+10	8.78E+09	0.00E+00	9.23E+09	0.00E+00	1.61E+10
Zn-69	5.00E-11	9.00E-11	6.70E-12	0.00E+00	3.74E-11	0.00E+00	7.34E-09
Br-83	0.00E+00	0.00E+00	9.34E-01	0.00E+00	0.00E+00	0.00E+00	0.00E+00
Br-84	0.00E+00	0.00E+00	1.26E-22	0.00E+00	0.00E+00	0.00E+00	0.00E+00
Br-85	0.00E+00	0.00E+00	0.00E+00	0.00E+00	0.00E+00	0.00E+00	0.00E+00
Rb-86	0.00E+00	2.23E+10	1.10E+10	0.00E+00	0.00E+00	0.00E+00	5.69E+08
Rb-88	0.00E+00	0.00E+00	0.00E+00	0.00E+00	0.00E+00	0.00E+00	0.00E+00
Rb-89	0.00E+00	0.00E+00	0.00E+00	0.00E+00	0.00E+00	0.00E+00	0.00E+00
Sr-89	1.26E+10	0.00E+00	3.61E+08	0.00E+00	0.00E+00	0.00E+00	2.59E+08
Sr-90	1.22E+11	0.00E+00	3.10E+10	0.00E+00	0.00E+00	0.00E+00	1.52E+09
Sr-91	2.72E+05	0.00E+00	9.83E+03	0.00E+00	0.00E+00	0.00E+00	3.21E+05
Sr-92	4.64E+00	0.00E+00	1.72E-01	0.00E+00	0.00E+00	0.00E+00	5.00E+01
Y-90	6.80E+02	0.00E+00	1.82E+01	0.00E+00	0.00E+00	0.00E+00	9.39E+05
Y-91m	5.67E-19	0.00E+00	1.93E-20	0.00E+00	0.00E+00	0.00E+00	1.89E-15
Y-91	7.33E+04	0.00E+00	1.95E+03	0.00E+00	0.00E+00	0.00E+00	5.25E+06
Y-92	5.38E-04	0.00E+00	1.51E-05	0.00E+00	0.00E+00	0.00E+00	1.03E+01
Y-93	2.16E+00	0.00E+00	5.87E-02	0.00E+00	0.00E+00	0.00E+00	1.70E+04
Zr-95	6.80E+03	1.66E+03	1.18E+03	0.00E+00	1.79E+03	0.00E+00	8.26E+05
Zr-97	4.06E+00	6.97E-01	3.18E-01	0.00E+00	7.03E-01	0.00E+00	4.45E+04
Nb-95	5.94E+05	2.45E+05	1.41E+05	0.00E+00	1.75E+05	0.00E+00	2.06E+08
Mo-99	0.00E+00	2.08E+08	4.05E+07	0.00E+00	3.11E+08	0.00E+00	6.85E+07
Tc-99m	2.75E+01	5.67E+01	7.30E+02	0.00E+00	6.10E+02	2.96E+01	1.65E+04
Tc-101	0.00E+00	0.00E+00	0.00E+00	0.00E+00	0.00E+00	0.00E+00	0.00E+00
Ru-103	8.67E+03	0.00E+00	2.90E+03	0.00E+00	1.80E+04	0.00E+00	1.05E+05
Ru-105	8.05E-03	0.00E+00	2.71E-03	0.00E+00	5.92E-02	0.00E+00	3.20E+00
Ru-106	1.90E+05	0.00E+00	2.38E+04	0.00E+00	2.25E+05	0.00E+00	1.44E+06
Ag-110m	3.86E+08	2.82E+08	1.86E+08	0.00E+00	4.03E+08	0.00E+00	1.46E+10
Sb-122	2.51E+06	4.59E+04	7.31E+05	3.75E+04	0.00E+00	1.30E+06	9.13E+07
Sb-124	2.09E+08	3.08E+06	6.49E+07	5.56E+05	0.00E+00	1.31E+08	6.46E+08
Sb-125	1.50E+08	1.45E+06	3.08E+07	1.87E+05	0.00E+00	9.38E+07	1.99E+08

Table 3-12d

INFANT GRASS/COW/MILK PATHWAY Ri(C)

m^2 * mrem/yr per uCi/sec (H-3: mrem/yr per uCi/m^3)

Isotope	BONE	LIVER	TOT BODY	THYROID	KIDNEY	LUNG	GILLI
Te-125m	1.51E+08	5.04E+07	2.04E+07	5.07E+07	0.00E+00	0.00E+00	7.18E+07
Te-127m	4.21E+08	1.40E+08	5.10E+07	1.22E+08	1.04E+09	0.00E+00	1.70E+08
Te-127	6.32E+03	2.12E+03	1.36E+03	5.14E+03	1.54E+04	0.00E+00	1.33E+05
Te-129m	5.57E+08	1.91E+08	8.58E+07	2.14E+08	1.39E+09	0.00E+00	3.33E+08
Te-129	2.72E-09	9.37E-10	6.35E-10	2.28E-09	6.77E-09	0.00E+00	2.17E-07
Te-131m	3.38E+06	1.36E+06	1.12E+06	2.75E+06	9.35E+06	0.00E+00	2.29E+07
Te-131	3.43E-32	1.27E-32	9.62E-33	3.06E-32	8.76E-32	0.00E+00	1.38E-30
Te-132	2.11E+07	1.04E+07	9.75E+06	1.54E+07	6.53E+07	0.00E+00	3.87E+07
I-130	3.55E+06	7.81E+06	3.13E+06	8.75E+08	8.58E+06	0.00E+00	1.67E+06
I-131	2.72E+09	3.20E+09	1.41E+09	1.05E+12	3.74E+09	0.00E+00	1.14E+08
I-132	1.43E+00	2.90E+00	1.03E+00	1.36E+02	3.24E+00	0.00E+00	2.35E+00
I-133	3.63E+07	5.28E+07	1.55E+07	9.60E+09	6.21E+07	0.00E+00	8.93E+06
I-134	1.76E-11	3.60E-11	1.28E-11	8.40E-10	4.03E-11	0.00E+00	3.73E-11
I-135	1.12E+05	2.23E+05	8.14E+04	2.00E+07	2.49E+05	0.00E+00	8.08E+04
Cs-134	3.65E+10	6.80E+10	6.87E+09	0.00E+00	1.75E+10	7.18E+09	1.85E+08
Cs-136	1.97E+09	5.79E+09	2.16E+09	0.00E+00	2.31E+09	4.72E+08	8.80E+07
Cs-137	5.15E+10	6.02E+10	4.27E+09	0.00E+00	1.62E+10	6.55E+09	1.88E+08
Cs-138	8.39E-23	1.36E-22	6.61E-23	0.00E+00	6.80E-23	1.06E-23	2.18E-22
Ba-139	3.79E-07	2.51E-10	1.10E-08	0.00E+00	1.51E-10	1.52E-10	2.40E-05
Ba-140	2.40E+08	2.40E+05	1.24E+07	0.00E+00	5.71E+04	1.48E+05	5.91E+07
Ba-141	0.00E+00	0.00E+00	0.00E+00	0.00E+00	0.00E+00	0.00E+00	0.00E+00
Ba-142	0.00E+00	0.00E+00	0.00E+00	0.00E+00	0.00E+00	0.00E+00	0.00E+00
La-140	4.06E+01	1.60E+01	4.12E+00	0.00E+00	0.00E+00	0.00E+00	1.88E+05
La-142	8.55E-11	3.14E-11	7.51E-12	0.00E+00	0.00E+00	0.00E+00	5.33E-06
Ce-141	4.34E+04	2.64E+04	3.11E+03	0.00E+00	8.15E+03	0.00E+00	1.37E+07
Ce-143	3.97E+02	2.63E+05	3.00E+01	0.00E+00	7.67E+01	0.00E+00	1.54E+06
Ce-144	2.33E+06	9.52E+05	1.30E+05	0.00E+00	3.85E+05	0.00E+00	1.33E+08
Pr-143	1.49E+03	5.55E+02	7.36E+01	0.00E+00	2.06E+02	0.00E+00	7.84E+05
Pr-144	0.00E+00	0.00E+00	0.00E+00	0.00E+00	0.00E+00	0.00E+00	0.00E+00
Nd-147	8.81E+02	9.05E+02	5.55E+01	0.00E+00	3.49E+02	0.00E+00	5.74E+05
W-187	6.12E+04	4.26E+04	1.47E+04	0.00E+00	0.00E+00	0.00E+00	2.50E+06
Np-239	3.66E+01	3.27E+00	1.85E+00	0.00E+00	6.53E+00	0.00E+00	9.46E+04
K-40	0.00E+00	0.00E+00	0.00E+00	0.00E+00	0.00E+00	0.00E+00	0.00E+00
Co-57	0.00E+00	8.95E+06	1.46E+07	0.00E+00	0.00E+00	0.00E+00	3.05E+07
Sr-85	0.00E+00	0.00E+00	0.00E+00	0.00E+00	0.00E+00	0.00E+00	0.00E+00
Y-88	0.00E+00	0.00E+00	0.00E+00	0.00E+00	0.00E+00	0.00E+00	0.00E+00
Nb-94	0.00E+00	0.00E+00	0.00E+00	0.00E+00	0.00E+00	0.00E+00	0.00E+00
Nb-97	0.00E+00	0.00E+00	0.00E+00	0.00E+00	0.00E+00	0.00E+00	0.00E+00
Cd-109	0.00E+00	0.00E+00	0.00E+00	0.00E+00	0.00E+00	0.00E+00	0.00E+00
Sn-113	0.00E+00	0.00E+00	0.00E+00	0.00E+00	0.00E+00	0.00E+00	0.00E+00
Ba-133	0.00E+00	0.00E+00	0.00E+00	0.00E+00	0.00E+00	0.00E+00	0.00E+00
Te-134	0.00E+00	0.00E+00	0.00E+00	0.00E+00	0.00E+00	0.00E+00	0.00E+00
Ce-139	0.00E+00	0.00E+00	0.00E+00	0.00E+00	0.00E+00	0.00E+00	0.00E+00
Hg-203	0.00E+00	0.00E+00	0.00E+00	0.00E+00	0.00E+00	0.00E+00	0.00E+00

Table 3-13

Total Body & Skin Ground Plane Dose Factors Ri(G) and Ri(S)

Isotope	(sec^{-1}) Decay Constant	(m^2 * mrem/yr per uCi/sec) Ri(G)	Ri(S)
H-3	1.780E-09	0.00E+00	0.00E+00
Be-7	1.505E-07	0.00E+00	0.00E+00
Na-24	1.284E-05	1.19E+07	1.39E+07
P-32	5.614E-07	0.00E+00	0.00E+00
Cr-51	2.896E-07	4.66E+06	5.51E+06
Mn-54	2.567E-08	1.39E+09	1.62E+09
Mn-56	7.467E-05	9.03E+05	1.07E+06
Fe-55	8.141E-09	0.00E+00	0.00E+00
Fe-59	1.802E-07	2.72E+08	3.20E+08
Co-58	1.133E-07	3.79E+08	4.44E+08
Co-60	4.170E-09	2.15E+10	2.53E+10
Ni-63	2.290E-10	0.00E+00	0.00E+00
Ni-65	7.641E-05	2.97E+05	3.45E+05
Cu-64	1.516E-05	6.07E+05	6.88E+05
Zn-65	3.289E-08	7.46E+08	8.58E+08
Zn-69	2.027E-04	0.00E+00	0.00E+00
Br-83	8.056E-05	4.87E+03	7.08E+03
Br-84	3.633E-04	2.03E+05	2.36E+05
Br-85	3.851E-03	0.00E+00	0.00E+00
Rb-86	4.299E-07	8.99E+06	1.03E+07
Rb-88	6.490E-04	3.31E+04	3.78E+04
Rb-89	7.600E-04	1.21E+05	1.45E+05
Sr-89	1.589E-07	2.16E+04	2.51E+04
Sr-90	7.548E-10	0.00E+00	0.00E+00
Sr-91	2.027E-05	2.15E+06	2.51E+06
Sr-92	7.105E-05	7.77E+05	8.63E+05
Y-90	3.008E-06	4.48E+03	5.30E+03
Y-91m	2.324E-04	1.00E+05	1.16E+05
Y-91	1.371E-07	1.07E+06	1.21E+06
Y-92	5.439E-05	1.80E+05	2.14E+05
Y-93	1.906E-05	1.83E+05	2.51E+05
Zr-95	1.254E-07	2.45E+08	2.84E+08
Zr-97	1.139E-05	2.96E+06	3.44E+06
Nb-95	2.282E-07	1.37E+08	1.61E+08
Mo-99	2.917E-06	3.99E+06	4.62E+06
Tc-99m	3.198E-05	1.84E+05	2.11E+05
Tc-101	8.136E-04	2.04E+04	2.26E+04
Ru-103	2.042E-07	1.08E+08	1.26E+08
Ru-105	4.337E-05	6.36E+05	7.21E+05
Ru-106	2.179E-08	4.22E+08	5.07E+08
Ag-110m	3.210E-08	3.44E+09	4.01E+09
Sb-122	2.971E-06	0.00E+00	0.00E+00
Sb-124	1.333E-07	5.98E+08	6.90E+08
Sb-125	7.935E-09	2.34E+09	2.64E+09

Table 3-13

Total Body & Skin Ground Plane Dose Factors Ri(G) and Ri(S)

Isotope	(sec^{-1}) Decay Constant	(m^2 * mrem/yr per uCi/sec) Ri(G)	Ri(S)
Te-125m	1.383E-07	1.55E+06	2.13E+06
Te-127m	7.360E-08	9.16E+04	1.08E+05
Te-127	2.059E-05	2.98E+03	3.28E+03
Te-129m	2.388E-07	1.98E+07	2.31E+07
Te-129	1.660E-04	2.62E+04	3.10E+04
Te-131m	6.418E-06	8.03E+06	9.46E+06
Te-131	4.621E-04	2.92E+04	3.45E+07
Te-132	2.462E-06	4.23E+06	4.98E+06
I-130	1.558E-05	5.51E+06	6.69E+06
I-131	9.978E-07	1.72E+07	2.09E+07
I-132	8.371E-05	1.25E+06	1.46E+06
I-133	9.257E-06	2.45E+06	2.98E+06
I-134	2.196E-04	4.47E+05	5.30E+05
I-135	2.913E-05	2.53E+06	2.95E+06
Cs-134	1.066E-08	6.86E+09	8.00E+09
Cs-136	6.124E-07	1.50E+08	1.70E+08
Cs-137	7.327E-10	1.03E+10	1.20E+10
Cs-138	3.588E-04	3.59E+05	4.10E+05
Ba-139	1.397E-04	1.05E+05	1.19E+05
Ba-140	6.297E-07	2.04E+07	2.34E+07
Ba-141	6.323E-04	4.17E+04	4.75E+04
Ba-142	1.090E-03	4.44E+04	5.06E+04
La-140	4.781E-06	1.92E+07	2.18E+07
La-142	1.249E-04	7.36E+05	8.84E+05
Ce-141	2.468E-07	1.37E+07	1.54E+07
Ce-143	5.835E-06	2.31E+06	2.63E+06
Ce-144	2.822E-08	6.95E+07	8.04E+07
Pr-143	5.916E-07	0.00E+00	0.00E+00
Pr-144	6.685E-04	1.83E+03	2.11E+03
Nd-147	7.306E-07	8.39E+06	1.01E+07
W-187	8.056E-06	2.36E+06	2.74E+06
Np-239	3.399E-06	1.71E+06	1.98E+06
K-40	1.717E-17	0.00E+00	0.00E+00
Co-57	2.961E-08	1.88E+08	2.07E+08
Sr-85	1.237E-07	0.00E+00	0.00E+00
Y-88	7.523E-08	0.00E+00	0.00E+00
Nb-94	1.083E-12	0.00E+00	0.00E+00
Nb-97	1.602E-04	1.76E+05	2.07E+05
Cd-109	1.729E-08	0.00E+00	0.00E+00
Sn-113	6.970E-08	0.00E+00	0.00E+00
Ba-133	2.047E-09	0.00E+00	0.00E+00
Te-134	2.764E-04	2.22E+04	2.66E+04
Ce-139	5.828E-08	0.00E+00	0.00E+00
Hg-203	1.722E-07	0.00E+00	0.00E+00

APPENDIX 3-A

CALCULATION OF ALLOWABLE RELEASE RATES

Primary Assumptions:

1. Unit 3 and Unit 2 effective dose factor Keff, values are equivalent.
2. Each unit shares 50% of the total allowable release rate, Q, in Ci s-1. Therefore, Q3 = Q2 for instantaneous releases.

Given:

	LOCATION	UNIT 3	UNIT 2	LOCATION
Noble Gas X/Q (sec/m^3)	(SSW 380m)	4.85E-6	2.54E-6	(SSW 579m)
Wv(in) Annual Average Site Boundary X/Q (sec/m^3)	(SW 350m)	5.21E-6	2.54E-6	(SSW 579m)
Wv(gp) Annual Average Ground Plane Site Boundary Deposition	(SSW 380m)	2.72E-8 m^{-2}		
Wv(f) Food Pathway Deposition Parameter	(SSW 5mi)	1.35E-9 m^{-2}		
Wv(in) Annual Average X/Q (5 mi)	(SSW 5mi)	7.22E-7 sec/m^3		
Wv(in) Inhalation Pathway Nearest Residence	(SSW 1526m)	8.96E-7 sec/m^3		
Wv(gp) Annual Average Ground Plane Deposition Parameter Nearest Residence	(S 1379m)	6.14E-9 m^{-2}		

INSTANTANEOUS
RELEASE RATE VS. DOSE RATE
UNITS 2 & 3

Indian Point 3 and 2 share a common site boundary limit of 500 mrem/yr. This 500 mrem/yr limit is divided between units 3 and 2 based upon a 50-50 split of the release rate in μCi/sec. Because each unit has its own X/Q and K eff, equal μCi/sec discharges from each plant will result in different dose rates for each plant at the most restrictive site boundary location. In order to define the split of the 500 mrem/yr limit, units 3 and 2 have agreed to base the dose split on the mixture presented in Table 3A-1 (Appendix 3-A, page 4).

Dose Split Between IP2 and IP3

A. Instantaneous Dose Rate: Calculation of Allowable Release Rate: Noble Gas Release Including Finite Cloud Correction for Site Boundary.

i. Whole Body

Given:

a) site limit is 500 mrem/yr
b) IP3 X/Q for SSW sector = 4.85E-6 sec/m^3
c) K eff for IP3 SSW sector = 1.55E+3 $\frac{\text{mrem - m}^3}{\mu\text{Ci - yr}}$
d) IP2 X/Q for SSW sector = 2.54E-6 sec/m^3
e) IP2 K eff for SSW sector = 2.43E+3 $\frac{\text{mrem - m}^3}{\mu\text{Ci - yr}}$
f) Q = μCi/sec

Solve for Q:

$Q[(X/Q_3)\ (K\ eff_3) + (X/Q_2)\ (K\ eff_2)] = 500$ mrem/yr

$Q[(4.85E\text{-}6)\ (1.55E+3) + (2.54E\text{-}6)\ (2.43E+3$ = 500 mrem/yr

Q = 3.65E+4 μCi/sec

ii. Skin

Given:

a) site limit is 3,000 mrem/yr
b) IP3 X/Q for SSW sector = 4.85E-6 sec/m^3
c) IP3 (Li + 1.1 Mi) = 3.31E+3 $\frac{\text{mrem - m}^3}{\mu\text{Ci - yr}}$
d) IP2 X/Q for SSW sector = 2.54E-6 sec/m^3
e) IP2 (Li + 1.1 Mi) = 4.38E+3 $\frac{\text{mrem - m}^3}{\mu\text{Ci - yr}}$
f) Q = μCi/sec

Solve for Q:

$Q[(X/Q)_1 (Li + 1.1\ Mi)_1 + (X/Q)_2 (Li + 1.1\ Mi)_2] = 3{,}000$ mrem/yr

$Q[(4.85E\text{-}6)\ (3.31E+3) + (2.54E\text{-}6)\ (4.38E+3)] = 3{,}000$ mrem/yr

$Q = 1.10E+5\ \mu Ci/sec$ (less restrictive than Whole Body)

Solve for dose commitments per site with Q = 3.65E+4 μCi/sec (whole body dose and the most restrictive rate).

Indian Point 3:

$$(3.65E+4\ \mu Ci/sec)\ (4.85E\text{-}6\ sec/m^3)\ (1.55E+3\ \frac{mrem - m^3}{\mu Ci - yr}) = 275\ mrem/yr$$

Indian Point 2:

$$(3.65E+4\ \mu Ci/sec)\ (2.54E\text{-}6\ sec/m^3)\ (2.43E+3\ \frac{mrem - m^3}{\mu Ci - yr}) = 225\ mrem/yr$$

Unit 3 has 55.4% and Unit 2 has 44.6% of the 500 mrem/yr Whole Body Dose instantaneous release rate limit.

Solve for the less restrictive skin dose rate limit for IP3:

$$(1.10E+5\ \mu Ci/sec)\ (4.85E\text{-}6\ sec/m^3)\ (3.31E+3\ \frac{mrem - m^3}{\mu Ci - yr}) = 1766\ mrem/yr$$

B. The conservative instantaneous release rate calculated in above step A.1 is based upon the mixture presented in Table 3A-1 solely for the purpose of splitting the dose rate as shown above. To determine an administrative release rate for IP3 based on the 275 mrem/yr dose rate (i.e., no sharing), the mix in Table 3-8 is used. The 275 mrem/yr limit and the mixture presented in Table 3-8 are used to calculate a μCi/sec instantaneous limit for IP3.

Given:

a) IP3 site boundary limit is 275 mrem/yr
b) IP3 X/Q ssw sector = 4.85E-6 sec/m³
c) IP3 K eff (Table 3-8) = $1.49E+3\ \frac{mrem - m^3}{\mu Ci - yr}$
d) Q = μCi/sec

Solve for Q:

$Q(4.85E\text{-}6)\ (1.49E+3) = 275$ mrem/yr
$Q = 3.81E+4\ \mu Ci/sec$

Table 3A-1

MIXTURE FOR SHARED LIMITS

Isotope	Abundance
Kr-85m	.0362
Kr-88	.0790
Xe-133	.4027
Xe-135m	.0740
Xe-138	.1467
Xe-135	.2614

	IP3	IP2
Ki*	1.55E+3	2.43E+3
Li	1.51E+3	1.51E+3
Mi*	1.63E+3	2.61E+3

Ki units $\frac{\text{mrem} - \text{m}^3}{\mu\text{Ci} - \text{yr}}$

Li units $\frac{\text{mrem} - \text{m}^3}{\mu\text{Ci} - \text{yr}}$

Mi units $\frac{\text{mrad} - \text{m}^3}{\text{mrem} - \text{yr}}$

The SSW sector is the most restrictive for both whole body exposure and skin exposure for both units 2 and 3.

* Dose factors Ki and Mi are finite cloud corrected for each reactor unit and hence they are not identical.

RELEASE RATE LIMITS

QUARTERLY AND ANNUAL AVERAGE NOBLE GAS RELEASES

For a Calendar Quarter	For A Calendar Year
gamma air dose 5 mrad limit	gamma air dose 10 mrad limit
beta air dose 10 mrad limit	beta air dose 20 mrad limit

I. Assumptions:

1. Doses are delivered to the air at the site boundary.
2. Finite cloud geometry is assumed for noble gas releases at site boundary.
3. X/Q for Unit 3 = 4.85E-6 sec/m³, (Q = release rate μCi/sec)
4. Gamma air dose factor (M), Corrected for finite cloud geometry is: $M = 4.61E+2 \frac{mrad - m^3}{\mu Ci - yr}$

   (time average mix from Table 3-8)
5. Beta air dose factor (N) is unaffected by finite cloud assumption: $N = 1.34E+3 \frac{mrad - m^3}{\mu Ci - yr}$ (from Table 3-8)

II. Calculation of Quarterly Release Rates:

a) for gamma dose: (Q)x[(M)(X/Q)] less than or equal to 5 mrad/qtr (20 mrad/yr)

b) for beta dose: (Q)x[(N)(X/Q)] less than or equal to 10 mrad/qtr (40 mrad/yr)

Solve for a. $Q = \frac{5 \text{ mrad/qtr}}{(1/4 yr)\ (M)\ (X/Q)} = 8.95E+3\ \mu Ci/sec = 8.95E-3\ Ci/sec$

Solve for b. $Q = \frac{10 \text{ mrad/qtr}}{(1/4 yr)\ (N)\ (X/Q)} = 6.15E+3\ \mu Ci/sec = 6.15E-3\ Ci/sec$

Based on the above analysis, the beta dose is limiting for time average doses. Therefore, the allowable quarterly average release rate is 6.15E-3 Ci/sec.

III. Calculation of Calendar Year Release Rate

Annual limits are one half of quarterly limits. Therefore (using Beta air dose as most limiting), the maximum allowable annual average release rate is 3.08E+3 μCi/sec or 3.08E-3 Ci/sec.

NOTE: M and N values are taken from Table 3-8 for time average release mixture.

ALLOWABLE INSTANTANEOUS RELEASE RATE
IODINE 131/PARTICULATES (T½ GREATER THAN 8 DAYS)

Given: $W_v(in)$: X/Q for IP3 = 5.21E-6 sec/m³ @ 350m SW
$W_v(in)$: X/Q for IP2 = 2.54E-6 sec/m³ @ 579m SSW

$PI(c) = 1.62\ E7\ \frac{mrem/yr}{\mu Ci/m^3}$

Assumed Pathway: Child Inhalation at Unrestricted Area Boundary

Solve the following equation for Q:

$$[(Q)PI(c)(W_v(in))\ Unit\ 3] + [(Q)PI(c)(W_v(in))\ Unit\ 2] = 1500\ mrem/yr$$

IP3: $(Q)PI(c)(W_v(in))_3 = Q\ 1.62E7\ \frac{mrem/yr}{\mu Ci/m}\ 5.21E\text{-}6\ s/m^3 = Q\ 84.4\ \frac{mrem/yr}{\mu Ci/s}$

IP2: $(Q)PI(c)(W_v(in))_2 = Q\ 1.62E7\ \frac{mrem/yr}{\mu Ci/m}\ 2.54E\text{-}6\ s/m^3 = Q\ 41.1\ \frac{mrem/yr}{\mu Ci/s}$

The sum equals (125.5)(Q) mrem/yr per μCi/s.

Limit is 1500 mrem/yr per <u>site</u>:

Therefore: $125.5\ Q\ \frac{mrem/yr}{\mu Ci/s} = 1500\ mrem/yr$

Q = 1.20E+1 μCi/s
Q = 1.20E-5 Ci/s per unit

IP3 Dose Contribution: $1.20E{+}1\ \frac{\mu Ci}{s} * 1.62E7\ \frac{mrem}{yr}\ \frac{m^3}{\mu Ci} * 5.21E\text{-}6\ \frac{s}{m^3} = 1008\ mrem/yr$

IP2 Dose Contribution: $1.20E{+}1\ \frac{\mu Ci}{s} * 1.62E7\ \frac{mrem}{yr}\ \frac{m^3}{\mu Ci} * 2.54E\text{-}6\ \frac{s}{m^3} = 492\ mrem/yr$

Sum = 1500 mrem/yr

Approximately a 67.2% / 32.8% dose split for IP3 and IP2 respectively.

ALLOWABLE RELEASE RATES FOR IODINE/PARTICULATE TIME AVERAGE DOSES QUARTERLY AND ANNUAL DOSE LIMITS

There are two receptor pathways considered:

primary receptor - child at the nearest residence, and
secondary receptor - infant at 5 miles.

As discussed in the ODCM, both receptors will be considered when evaluating time averaged dose commitments. For the purpose of setting an administrative limit on quarterly and time average release rates, the secondary receptor was chosen because it proved more limiting (only long term releases were considered, e.g. the possibility of intermittent releases was not considered for the calculation).

Calculations for both receptor locations are included in this attachment for reference.

IODINE TIME AVERAGE*
(Primary Receptor)

Child at the nearest residence:

Given:** $X/Q = 8.96E-7\ s/m^3$ at 1526m SSW inhalation
$D/Q = 6.14E-9\ 1/m^2$ at 1279m S ground plane deposition factor

$RI(c) = 1.62E+7\ \frac{mrem/yr}{\mu Ci/m^3}$, child inhal. dose factor for I-131

$RG = 2.1E+7\ m^2\ \frac{mrem/yr}{\mu Ci/s}$

$RV(c) = 4.77E+10\ m^2\ \frac{mrem/yr}{\mu Ci/sec}$ vegetation path for child

Calculate the allowable time average release rate by solving the following equation for Q:

$$Q[(RIc)(X/Q) + (RG)(D/Q) + (RVc)(D/Q)] = \text{limit in mrem/yr}$$

$$(Q)(RIc)(X/Q) = 14.5\ Q\ \text{mrem/yr per}\ \mu Ci/s$$

$$(Q)(RG)\ (D/Q) = 0.1\ \ Q\ \text{mrem/yr per}\ \mu Ci/s$$

$$(Q)(RVc)(D/Q) = 293\ \ Q\ \text{mrem/yr per}\ \mu Ci/s$$

The sum equals 308 Q mrem/yr per μCi/s.

Quarterly time average limit is 7.5 mrem to any organ (or 30 mrem/yr).

Solving for Q yields: $Q\ 308\ \frac{mrem/yr}{\mu Ci/s} = 30\ mrem/yr$

$$Q = 9.74E-2\ \mu Ci/s$$
$$= 9.74E-8\ Ci/s$$

Annual limit is ½ quarterly limit: 15 mrem to any organ (15 mrem/yr).

$$Q = \frac{9.74E-8}{2} = 4.87E-8\ Ci/s$$

* Iodine 131 and particulates with half-lives greater than 8 days are assumed to be I-131 for the purposes of this calculation which is a conservative assumption since this nuclide has the highest thyroid dose factor of all iodines and particulates.

** Because the H-3 dose factor is about 4 orders of magnitude less than the Iodine dose factor, its contribution to the total dose is considered negligible.

IODINE TIME AVERAGE*
(Secondary Receptor)

Infant at 5 miles:

Given:** X/Q = 7.22E-7 s/m³ downwind at 5 mi.
D/Q = 1.35E-9 1/m² downwind at 5 mi.

RI(i) = 1.48E7 mrem/yr per μCi/m³, infant inhal. dose factor

RG = 2.1E7 m² mrem/yr per μCi/s, ground plane dose factor

RC(i) = 1.06E12 m² mrem/yr per μCi/s, cow-milk pathway dose factor for infant

RV(i): The infant vegetation factor is not calculated because the infant is assumed to have no intake of fresh vegetables.

Calculate the allowable time average release rate by solving the following equation for Q:

Q[(RIi)(X/Q) + (RG)(D/Q) + (RCi)(D/Q)] = limit in mrem/yr

Q(RIi)(X/Q) = 10.7 mrem/yr per μCi/s

Q(RG)(D/Q) = 0.03 mrem/yr per μCi/s

Q(RCi)(D/Q) = 1431 mrem/yr per μCi/s

The sum yields 1442 Q mrem/yr per μCi/s.

Quarterly time average limit is 7.5 mrem to any organ (or 30 mrem/yr).

Solving for Q yields: Q 1442 mrem/yr per μCi/s = 30 mrem/yr

Q = 2.08E-2 μCi/s
= 2.08E-8 Ci/s

Annual limit is ½ quarterly limit: 15 mrem to an organ (or 15 mrem/yr).

Q = 1.04E-8 Ci/s

* See note under Primary Receptor Calculation.
** See note under Primary Receptor Calculation.

Figure 3-1

Gaseous Radioactive Waste Effluent System Flow Diagram

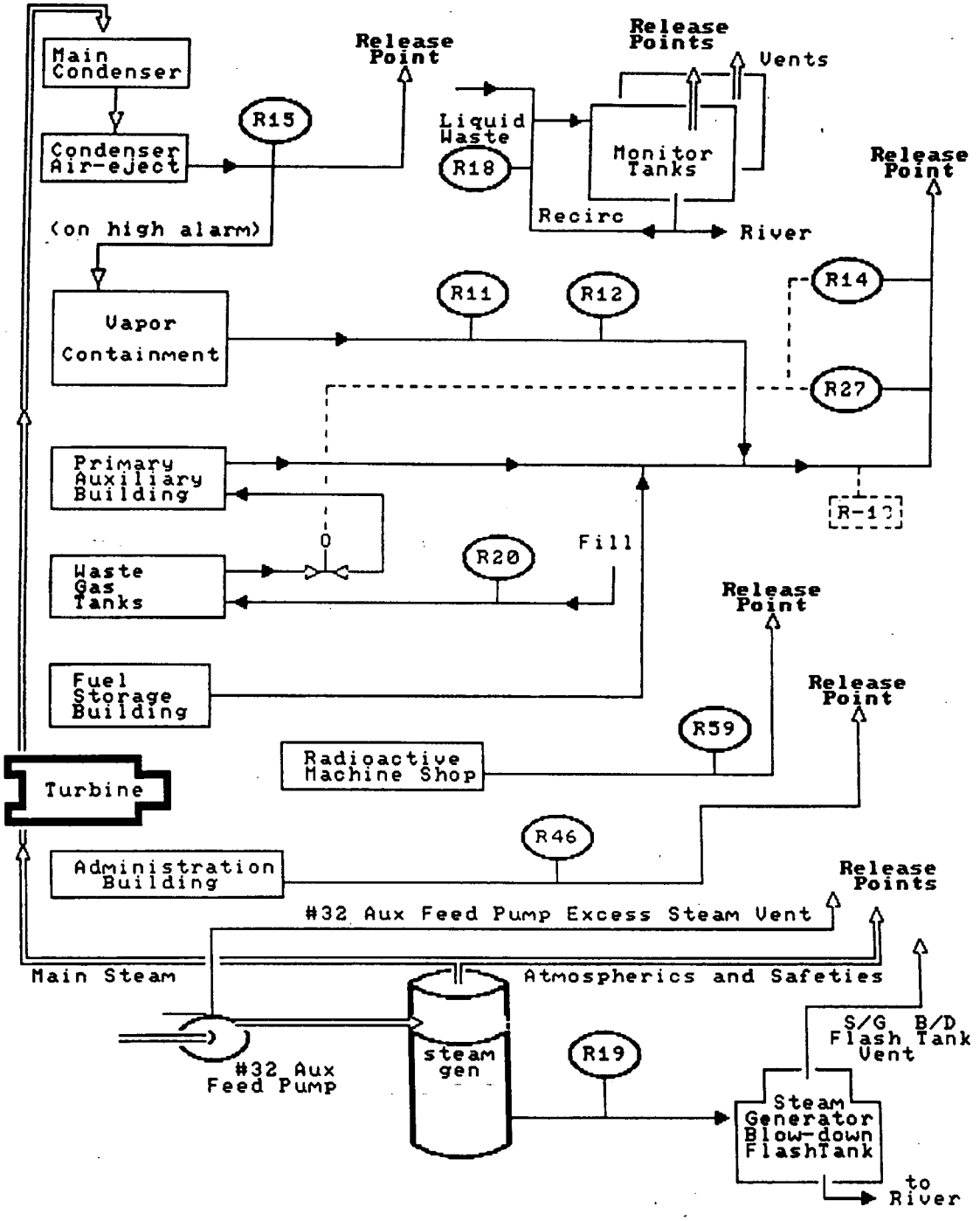

4.0 SAMPLE LOCATIONS

Figure 4.1 is a map which shows the location of environmental sampling points within 2.5 miles of the Indian Point Plant and Figure 4.2 is a map providing the same information for points at greater distances from the plant. Table 4.1 provides a description of environmental sample locations and the sample types collected at each of these locations.

The locations listed in Table 4.1 are the RECS designated locations only. The air sample locations were chosen considering the highest average annual D/Q sectors and the practicality of locating continuous air samplers. There are additional sample locations not listed in Table 4.1 that may be maintained to provide the program with additional supporting information.

RADIOLOGICAL ENVIRONMENTAL MONITORING - SAMPLING STATION
FIGURE 4-1

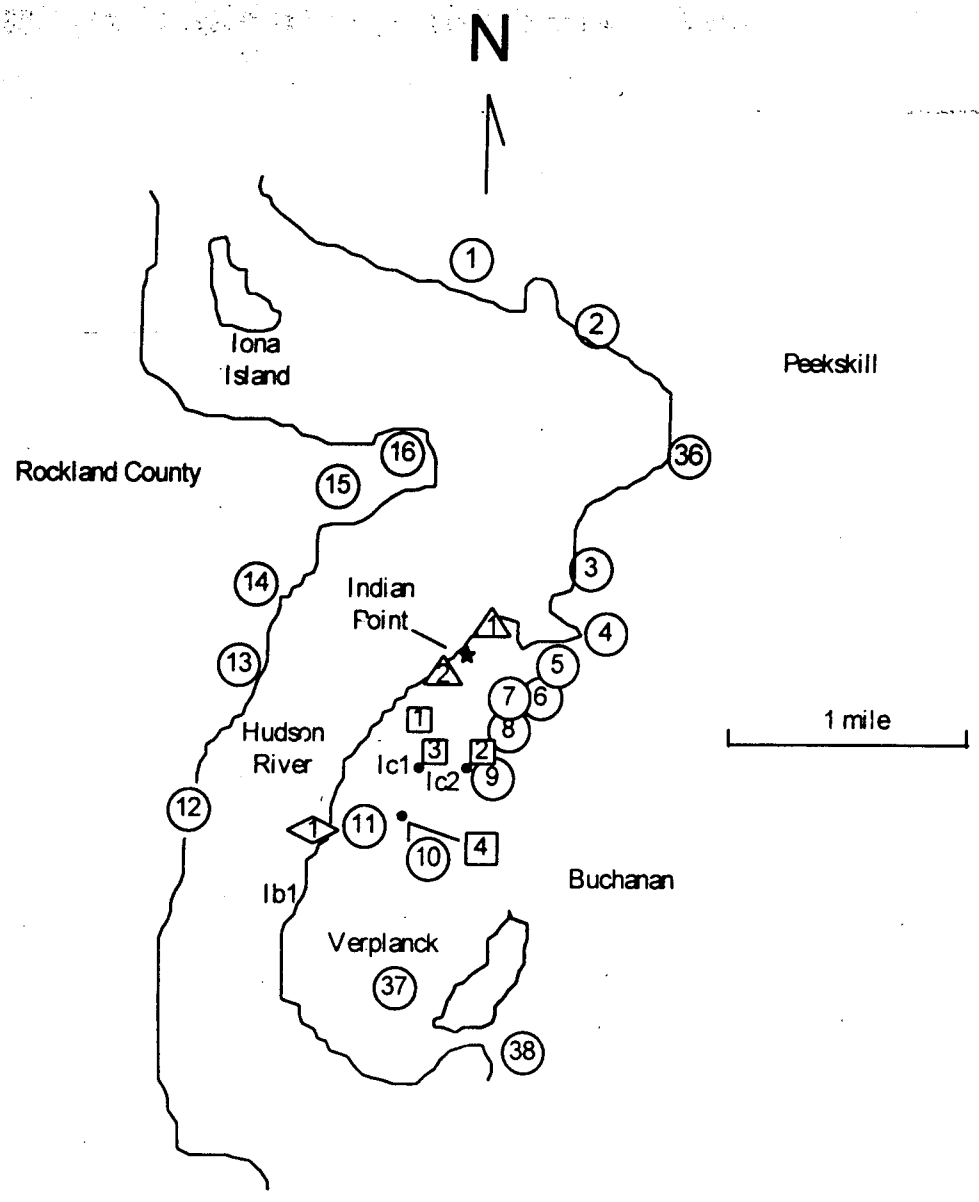

Key:

△ - Waterborne Surface (HR) Wa#

○ - Direct Radiation Sample Location DR#

□ - Airborne Sample Location A#

Ic# - Broadleaf Vegetation

◇ - Shoreline Sediment

Ib1 - Fish and Invertebrates

RADIOLOGICAL ENVIRONMENTAL MONITORING - SAMPLING STATIONS
FIGURE 4-2

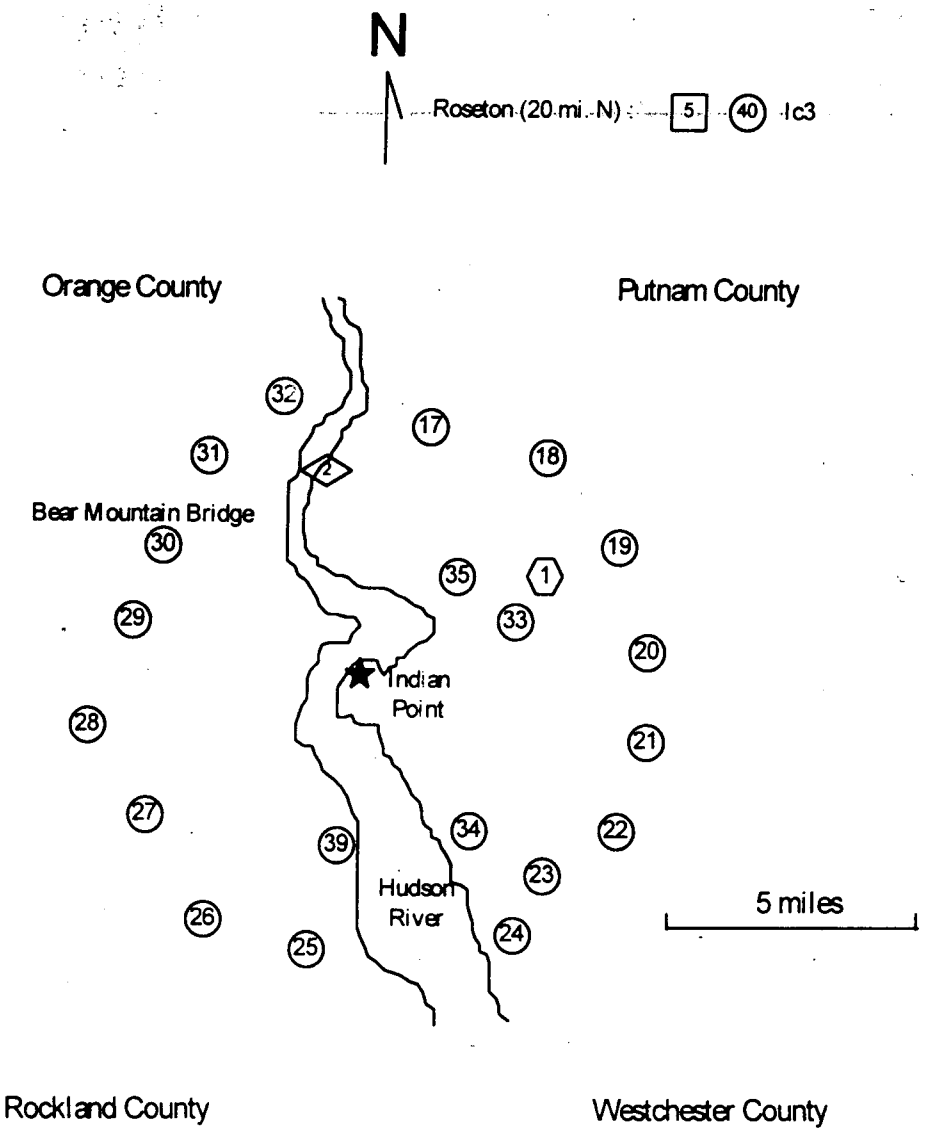

Key:
- ○ - Direct Radiation Sample Location DR#
- □ - Airborne Sampling Location A#
- ◇ - Shoreline Sediment
- Ic3 - Broadleaf Vegetation
- ⬡ Waterborne: Drinking

TABLE 4.1
INDIAN POINT STATION
ENVIRONMENTAL SAMPLING STATION POINTS

RETS SAMPLE DESIGNATION	LOCATION	DISTANCE
Exposure Pathway/Sample: Direct Radiation		
DR1	Roa Hook	2 mi - N
DR2	Old Pemart Ave	1.8 mi - NNE
DR3	Charles Point	0.8 mi - NE
DR4	Lents Cove	0.5 mi - ENE
DR5	Broadway and Bleakley	0.4 mi - E
DR6	Sector Six Reuter Stokes Pole	0.5 mi - ESE
DR7	Water Meter House	0.3 mi - SE
DR8	Service Center Building	0.4 mi - SSE
DR9	SE Corner	0.6 mi - S
DR10	NYU Tower	0.8 mi - SSW
DR11	White Beach	0.9 mi - SW
DR12	Gays Hill Road South	1.5 mi - WSW
DR13	Gays Hill Road North	1 mi - W
DR14	Rt. 9W across from R/S #14	1.2 mi - WNW
DR15	Rt. 9W. South of Ayers Road	1 mi - NW
DR16	Ayers Road	0.9 mi - NNW
DR17	Rt. 9D Garrison	5 mi - N
DR18	Gallows Hill Road	5 mi - NNE
DR19	Westbrook Drive	5 mi - NE
DR20	Lincoln Road - Cortlandt	4.8 mi - ENE
DR21	Croton Ave. - Cortlandt	5 mi - E
DR22	Colabaugh Pond Rd. Cortlandt	5 mi - ESE
DR23	Mt. Airy & Windsor Road	5 mi - SE
DR24	Croton Point	6.4 mi - SSE
DR25	Warren Ave. Haverstraw	4.8 mi - S
DR26	Railroad Ave. & 9W Haverstraw	4.6 mi - SSW
DR27	Willow Grove Road & Birch Dr.	5 mi - SW
DR28	Palisades Parkway-Lake Welch	5 mi - WSW
DR29	Palisades Parkway	4 mi - W
DR30	Anthony Wayne Park	4.5 mi - WNW
DR31	Palisades Pkwy South Exit	4.7 mi - NW
DR32	Rt. 9W Fort Montgomery	4.8 mi - NNW
DR33	Hamilton Street	3 mi - NE
DR34	Furnace Dock	3.5 mi - SE
DR35	Highland Ave. & Sprout Brook Rd. (near rock cut)	3 mi - NNE
DR36	Lower South Street	1.3 mi - NE
DR37	Verplank-Broadway & Sixth Str	1.3 mi - SSW
DR38	Cortlandt Yacht Club	1.6 mi - S
DR39	Grassy Point	3.3 mi - SSW
N/A	Control Location 1 (Roseton)	20 mi - N

TABLE 4.1 (Continued)

RETS SAMPLE DESIGNATION	LOCATION	DISTANCE
Exposure Pathway/Sample:	Airborne	
A1	Algonquin Gas Line	0.25 mi - SW
A2	NYPA Training Bldg	0.4 mi - S
A3	Met Tower	0.4 mi - SSW
A4	NYU Tower	0.8 mi - SSW
A5	Control Location 1 (Roseton)	20 mi - N
Exposure Pathway/Sample:	Waterborne - Surface (Hudson River Water)	
Wa1	Plant Inlet	N/A
Wa2	Discharge Canal	N/A
Exposure Pathway/Sample:	Waterborne - Drinking	
Wb1	Camp Field Reservoir	3.5 mi - NE
Exposure Pathway/Sample:	Sediment from Shoreline	
Wc1	White Beach	0.9 mi - SW
Wc2	Manitou Inlet	4.5 mi - NNW

Exposure Pathway/Sample: Milk

There are no milk animals within 8 km distance of Indian Point; therefore, no milk samples are taken. See Note 2.

Exposure Pathway/Sample: Ingestion-Fish and Invertebrates

The RECS designate two required sample locations labeled Ib1 and Ib2. The downstream Ib1 location and samples will be chosen where it is likely to be effected by plant discharge. Ib2 will be a location upstream that is not likely to be effected by plant discharge. The following fish species are considered acceptable sample species.

Striped Bass	Bluegill Sunfish
White Perch	Pumpkin Seed Sunfish
White Catfish	Blueback Herring
American Eel	Crabs

Exposure Pathway/Sample: Ingestion-Food Products (Broad Leaf Vegetation) (See Note 1)

Ic1	Met Tower, SSW Sector	0.4 miles - SSW
Ic2	NYPA Training Bldg, S Sector	0.4 miles - S
Ic3	Roseton (North)	20 miles - N

TABLE 4.1

NOTES

NOTE 1

Radiochemical separation and analysis is not required for I-131 vegetation samples: as long as the required RECS LLD is met using gamma spectroscopy.

NOTE 2

The requirement to obtain and analyze samples from milch animals within 8 km of the site is intended to ensure monitoring of the "cow-milk" and vegetation pathways. Such samples would only be of value were the milk used for human consumption. Thus, only milch animals whose milk is used for human consumption are considered in the pathway and sample evaluation.