ATTACHMENT I TO IPN-98-018

PROPOSED CHANGES TO TECHNICAL SPECIFICATIONS

INCORPORATING RECOMMENDATIONS OF GENERIC LETTER 89-01

AND DRAFT PART 20 GENERIC LETTER

NEW YORK POWER AUTHORITY
INDIAN POINT 3 NUCLEAR POWER PLANT
DOCKET NO. 50-286
DPR-64

9803060235 980219
PDR ADOCK 05000286
P PDR

1.16 REPORTABLE EVENT

A REPORTABLE EVENT shall be any of those conditions specified in Section 50.73 to 10 CFR 50.

1.17 CORE OPERATING LIMITS REPORT

The CORE OPERATING LIMITS REPORT (COLR) is the unit-specific document that provides core operating limits for the current operating reload cycle. These cycle-specific core operating limits shall be determined for each reload cycle in accordance with Specification 6.9.1.6. Plant operation within these operating limits is addressed in individual specifications.

1.18 SHUTDOWN MARGIN

SHUTDOWN MARGIN (SDM) is the instantaneous amount of negative reactivity by which the reactor is subcritical or would be subcritical from its present condition assuming all full-length rod cluster assemblies (shutdown and control) are fully inserted except for the single rod cluster assembly of highest reactivity worth which is assumed to be fully withdrawn.

1.19 EFFLUENT CONCENTRATION

The EFFLUENT CONCENTRATION is that concentration of a radionuclide specified in 10 CFR 20, Table 2 of Appendix B.

1.20 MEMBER(S) OF THE PUBLIC

MEMBER OF THE PUBLIC means any individual except when that individual is receiving an OCCUPATIONAL DOSE.

1.21 OCCUPATIONAL DOSE

OCCUPATIONAL DOSE means the dose received by an individual in the course of employment in which the individual's assigned duties involve exposure to radiation or to radioactive material from licensed and unlicensed sources of radiation, whether in the possession of the licensee or other person. OCCUPATIONAL DOSE does not include dose received from background radiation, from any medical administration the individual has received, from exposure administered to individuals administered radioactive material and released in accordance with 35.75, from voluntary participation in medical research programs, or as a MEMBER OF THE PUBLIC.

1.22 OFFSITE DOSE CALCULATION MANUAL (ODCM)

The OFFSITE DOSE CALCULATION MANUAL SHALL contain the current methodology and parameters used in the calculation of offsite doses resulting from radioactive gaseous and liquid effluents, in the calculation of gaseous and liquid effluent monitoring Alarm/Trip Setpoints, and in the conduct of the Radiological Environmental Monitoring Program. The ODCM shall also contain (1) the Radioactive Effluent Controls and Radiological Environmental Monitoring Programs required by Appendix A Technical Specification 6.8.4 and (2) descriptions of the information that should be included in the Annual Radiological Environmental Operating and Radioactive Effluent Release Reports required by Appendix B Technical Specifications 4.3.2.1 and 4.3.2.2.

1.23 PROCESS CONTROL PROGRAM (PCP)

The PROCESS CONTROL PROGRAM shall contain the current formulas, sampling, analyses, tests, and determinations to be made to ensure that the processing and packaging of solid radioactive wastes based on demonstrated processing of actual or simulated wet solid wastes will be accomplished in such a way to assure compliance with 10 CFR Parts 20, 61 and 71, and Federal and State regulations and other requirements governing the disposal of solid radioactive waste.

1.24 SITE BOUNDARY

The SITE BOUNDARY (see Figure 1-1) means that line beyond which the land or property is not owned, leased, or otherwise controlled by either site licensee.

1.25 UNRESTRICTED AREA

An UNRESTRICTED AREA (see Figure 1-1) shall be any area at or beyond the SITE BOUNDARY access to which is not controlled by either site licensee for purposes of protection of individuals from exposure to radiation and radioactive materials, or any area within the SITE BOUNDARY used for residential quarters or for industrial, commercial, institutional, and/or recreational purposes. The UNRESTRICTED AREA boundary may coincide with the exclusion (fenced) are boundary, as defined in 10 CFR 100.3(a), but the UNRESTRICTED AREA does not include areas over water bodies. The concept of UNRESTRICTED AREAS, established at or beyond the SITE BOUNDARY, is utilized in the LIMITING CONDITIONS FOR OPERATION to keep levels of radioactive materials in liquid and gaseous effluents as low is as is reasonably achievable, pursuant to 10 CFR 50.36a.

b. Each REPORTABLE EVENT shall be reviewed by the PORC and a report submitted by the Site Executive Officer to the Chief Nuclear Officer, Vice President Regulatory Affairs and Special Projects, and the Chairman of the SRC.

6.7 SAFETY LIMIT VIOLATION

6.7.1 The following actions shall be taken in the event a Safety Limit is violated:

a. The reactor shall be shut down and reactor operation shall only be resumed in accordance with the provisions of 10 CFR 50.36(c)(1)(i).

b. The Safety Limit Violation shall be reported immediately to the Commission. The Chief Nuclear Officer, Vice President Regulatory Affairs and Special Projects, and the Chairman of the SRC will be notified within 24 hours.

c. A Safety Limit Violation Report shall be prepared by the PORC. This report shall describe (1) applicable circumstances preceding the occurrences, (2) effects of the occurrence upon facility components, systems or structures, and (3) corrective action taken to prevent recurrence.

d. The Safety Limit Violation Report shall be submitted to the Commission, the Chief Nuclear Officer, the Vice President Regulatory Affairs and Special Projects, and the Chairman of the SRC by the Site Executive Officer.

6.8 PROCEDURES AND PROGRAMS

6.8.1 Written procedures shall be established, implemented and maintained covering the activities referenced below:

a. The applicable procedures recommended in Appendix "A" of Regulatory Guide 1.33, November, 1972.

b. Refueling operations.

c. Surveillance and test activities of safety related equipment.

d. Security Plan implementation.

e. Emergency Plan implementation.

f. Process Control Program implementation.

g. Offsite Dose Calculation Manual implementation.

h. Post-accident sampling and analysis and maintenance of required equipment.

i. Collection and analysis or measurement of post-accident radioactive iodine and particulates in plant gaseous effluents and maintenance of required equipment.

j. Fire Protection Program Plan implementation.

k. Radioactive Effluent Control Program implementation.

l. Radiological Environmental Monitoring Program implementation.

6.8.2 Each procedure of 6.8.1 above, and changes thereto, shall be approved prior to implementation by the appropriate responsible member(s) of management, as specified in Technical Specification 6.5.0. They shall also be reviewed periodically as set forth in administrative procedures.

6.8.3 Temporary changes to procedures above may be made provided:

a. The intent of the original procedure is not altered.

b. The change is approved by two members of the plant staff, at least one of whom holds a Senior Reactor Operator's License.

c. The change is documented, and reviewed and approved by the appropriate member(s) of plant management, as specified by Technical Specification 6.5.0 within 14 days of implementation.

6.8.4 The following programs shall be established, implemented, and maintained:

a. <u>Radioactive Effluent Controls Program</u>

A program shall be provided conforming with 10 CFR 50.36a for the control of radioactive effluents and for maintaining the doses to MEMBERS OF THE PUBLIC from radioactive effluents as low as reasonable achievable. The program (1) shall be contained in the ODCM, (2) shall be implemented by site procedures, and (3) shall include remedial actions to be taken whenever the program limits are exceeded. The program shall include the following elements:

1. Limitations on the operability of radioactive liquid and gaseous monitoring instrumentation including surveillance tests and setpoint determination in accordance with the methodology in the ODCM.

2. Limitations on the concentrations of radioactive material released in liquid effluents to UNRESTRICTED AREAS conforming to 10 times the concentration values in Appendix B, Table 2, Column 2 to 10 CFR 20.

3. Monitoring, sampling, and analysis of radioactive liquid and gaseous effluents pursuant to 10 CFR 20.1302 (except as discussed in 6.8.4.a.2) and with the methodology and parameters in the ODCM.

4. Limitations on the annual and quarterly doses or dose commitment to a MEMBER OF THE PUBLIC from radioactive materials in liquid effluents released from each unit to UNRESTRICTED AREAS conforming to Appendix I to 10 CFR Part 50.

5. Determinations of cumulative and projected dose contributions from radioactive effluents for the current calendar quarter and current calendar year in accordance with the methodology and parameters in the ODCM at least every 31 days.

6. Limitations on the operability and use of the liquid and gaseous effluent treatment systems to ensure that the appropriate portions of these systems are used to reduce releases of radioactivity when the projected doses in a 31 day period would exceed 2 percent of the guidelines for the annual dose or dose commitment conforming to Appendix I to 10 CFR Part 50.

7. Limitations on the dose rate resulting from radioactive material released in gaseous effluents from the site to areas at or beyond the SITE BOUNDARY shall be limited to the following:

   a. For noble gases: Less than or equal to a dose rate of 500 mrems/yr to the total body and less than or equal to a dose rate of 3000 mrems/yr to the skin, and

   b. For iodine-131, tritium, and for all radionuclides in particulate form with half-lives greater than 8 days: Less than or equal to dose rate of 1500 mrems/yr to any organ.

8. Limitations on the annual and quarterly air doses resulting from noble gases released in gaseous effluents from each unit to areas beyond the SITE BOUNDARY conforming to Appendix I to 10 CFR Part 50.

9. Limitations on the annual and quarterly doses to a MEMBER OF THE PUBLIC from iodine-131, tritium, and all radionuclides in particulate form with half-lives greater than 8 days in gaseous effluents released from each unit to areas beyond the SITE BOUNDARY conforming to Appendix I to 10 CFR Part 50.

10. Limitations on the annual dose or dose commitment to any MEMBER OF THE PUBLIC due to releases of radioactivity and to radiation from uranium fuel cycle sources conforming to 40 CFR Part 190.

b. Radiological Environmental Monitoring Program

A program shall be provided to monitor the radiation and radionuclides in the environs of the plant. The program shall provide (1) representative measurements of radioactivity in the highest potential exposure pathways, and (2) verification of the accuracy of the effluent monitoring program and modeling of the environmental exposure pathways. The program shall (1) be contained in the ODCM, (2) conform to the guidance of Appendix I to
10 CFR Part 50, and (3) include the following:

1. Monitoring, sampling, analysis, and reporting of radiation and radionuclides in the environment in accordance with the methodology and parameters in the ODCM.

2. A Land Use Census to ensure that changes in the use of areas at and beyond the SITE BOUNDARY are identified and that modifications to the monitoring program are made if required by the results of this census.

3. Participation in an Interlaboratory Comparison Program to ensure that independent checks on the precision and accuracy of the measurements of radioactive materials in environmental sample matrices are performed as part of the quality assurance program for environmental monitoring.

c. Process Control Program

A program shall be provided to ensure that the processing and packaging of solid radioactive wastes shall be accomplished in compliance with 10 CFR Parts 20, 61 and 71, and Federal and State regulations and other requirements governing the disposal of solid radioactive waste. The program requirements shall be contained in the PCP manual.

6.9 REPORTING REQUIREMENTS

ROUTINE REPORTS

6.9.1 In addition to the applicable reporting requirements of Title 10, Code of Federal Regulations, the following reports shall be submitted to the Regional Administrator - Region 1, unless otherwise noted.

STARTUP REPORT

6.9.1.1 A summary report of appropriate plant testing shall be submitted following (1), an amendment to the license involving a planned increase in power level, (2) installation of fuel that has a different design and (3) modifications that may have significantly altered the nuclear, thermal, or hydraulic performances of the plant. The report shall address each of the tests identified in the FSAR and shall in general include a description of the measured values of the operating conditions or characteristics obtained during the testing and comparison of these values with acceptance criteria. Any corrective actions that were required to obtain satisfactory operation shall also be described. Any additional specific details required in license conditions based on other commitments shall be included in this report.

6.9.1.2 Startup reports shall be submitted within (1) 90 days following completion of the startup test program, (2) 90 days following resumption or commencement of commercial power operation, or (3) 9 months following initial criticality, whichever is earliest. If the Startup Report does not cover all three events (i.e., initial criticality, completion of startup program, and resumption or commencement of commercial power operation), supplementary reports shall be submitted at least every three months until all three events have been completed.

ANNUAL RADIATION EXPOSURE REPORTS

6.9.1.3 A tabulation on an annual basis of the number of station, utility and other personnel (including contractors), for whom monitoring was required, receiving exposures greater than 100 mrem/yr and their associated man-rem exposures according to work and job functions, 1/ e.g., reactor operations and surveillance, inservice inspection, routine maintenance, special maintenance, waste processing, and refueling. The dose assignment to various duty functions may be estimates based on pocket dosimeter, TLD, or film badge measurements. Small exposures totalling less than 20% of the individual total dose need not be accounted for. In the aggregate, at least 80% of the total whole body dose received from external sources shall be assigned to specific major work functions.

MONTHLY OPERATING REPORT

6.9.1.4 Routine reports of operating statistics and shutdown experience, including documentation of all challenges to the PORVs or safety valves, shall be submitted on a monthly basis to the Director, Office of Resource Management, U.S. Nuclear Regulatory Commission, Washington, D.C. 20555, with a copy to the Regional Administrator - Region 1, no later than the 15th of each month following the calendar month covered by the report.

ANNUAL REPORTS

6.9.1.5 A report of specific activity analysis results in which the primary coolant exceeded the limits of Specification 3.1.D. The following information shall be included: (1) Reactor power history starting 48 hours prior to the first sample in which the limit was exceeded; (2) Results of the last isotopic analysis for radioiodine performed prior to exceeding the limit, results of analysis while activity was reduced to less than limit. Each result should include date and time of sampling and the radioiodine concentrations; (3) Clean-up system flow history starting 48 hours prior to the first sample in which the limit was exceeded; (4) Data providing the I-131 concentration and one other radioiodine isotope concentration in microcuries per gram as a function of time for the duration of the specific activity above the steady-state level; and (5) The time duration when the specific activity of the primary coolant exceeded the radioiodine limit.

1/ This tabulation supplements the requirements of 20.2206 of 10 CFR Part 20

6.9.1.6 CORE OPERATING LIMITS REPORT

6.9.1.6.a Core operating limits shall be established and documented in the CORE OPERATING LIMITS REPORT before each reload cycle or any remaining part of a reload cycle for the following:

1. Axial Flux Difference limits for Specification 3.10.2.

2. Heat Flux Hot Channel Factor and K(Z) for Specification 3.10.2.

3. Nuclear Enthalpy Rise Hot Channel Factor and Power Factor Multiplier for Specification 3.10.2.

4. Shutdown Bank Insertion Limit for Specification 3.10.4.

5. Control Bank Insertion Limits for Specification 3.10.4.

6.9.1.6.b The analytical methods used to determine the core operating limits shall be those previously reviewed and approved by NRC in:

1. WCAP-9272-P-A, "WESTINGHOUSE RELOAD SAFETY EVALUATION METHODOLOGY," July 1985 (W Proprietary).
   (Methodology for Specification 3.10.4 - Shutdown Bank Insertion Limit, Control Bank Insertion Limits and 3.10.2 - Nuclear Enthalpy Rise Hot Channel Factor.)

2a. WCAP-8385, "POWER DISTRIBUTION CONTROL AND LOAD FOLLOWING PROCEDURES - TOPICAL REPORT," September 1974 (W Proprietary).
   (Methodology for Specification 3.10.2 - Axial Flux Difference (Constant Axial Offset Control).)

Amendment No. 10, 11, 12, 51, 59, 65, 66, 88, 103, 116,

3f. WCAP-12610, "VANTAGE+ Fuel Assembly Report," (W Proprietary).
(Methodology for Specification 3.10.2 - Heat Flux Hot Channel Factor).

6.9.1.6.c The core operating limits shall be determined so that all applicable limits (e.g., fuel thermal-mechanical limits, core thermal-hydraulic limits, ECCS limits, nuclear limits such as shutdown margin, and transient and accident analysis limits) of the safety limits are met.

6.9.1.6.d The CORE OPERATING LIMITS REPORT, including any mid-cycle revisions or supplements thereto, shall be provided upon issuance, for each reload cycle, to the NRC Document Control Desk with copies to the Regional Administrator and Resident Inspector.

SPECIAL REPORTS

6.9.2 Special reports shall be submitted to the Regional Administrator-Region 1 within the time period specified for each report. These reports shall be submitted covering the activities identified below pursuant to the requirements of the applicable reference specification;

a. Sealed source leakage on excess of limits (Specification 3.9)

b. Inoperable Seismic Monitoring Instrumentation (Specification 4.10)

c. Seismic event analysis (Specification 4.10)

d. Inoperable plant vent sampling, main steam line radiation monitoring or effluent monitoring capability (Table 3.5-4, items 5, 6 and 7)

e. The complete results of the steam generator tube inservice inspection (Specification 4.9.C)

f. Deleted.

g. Release of radioactive effluents in excess of limits (Technical Specification 6.8.4.a)

Amendment No. 10, 11, 12, 31, 44, 51, 59, 65, 66, 67, 83, 88, 103, 108, 116, 117, 157,

h. Inoperable containment high-range radiation monitors (Table 3.5-5, Item 24)

i. Radioactive environmental sampling results in excess of reporting levels (Technical Specification 6.8.4.b)

j. Operation of Overpressure Protection System (Specification 3.1.A.8.c)

k. Operation of Toxic Gas Monitoring Systems (Specification 3.3.H.3.)

l. Inoperable explosive gas monitoring instrumentation (Appendix B, Technical Specification 1.1.1)

6.10 RECORD RETENTION

6.10.1 The following records shall be retained for at least five years:

a. Records and logs of facility operation covering time interval at each power level.

b. Records and logs of principal maintenance activities, inspection, repair and replacements of principal items of equipment related to nuclear safety.

c. ALL REPORTABLE EVENTS submitted to the Commission.

d. Records of surveillance activities, inspections and calibrations required by these Technical Specifications.

e. Records of changes made to Operating Procedures.

f. Records of radioactive shipments.

g. Records of sealed source and fission detector leak tests and results.

h. Records of annual physical inventory of all source material of record.

i. Records of reactor tests and experiments.

6.10.2 The following records shall be retained for the duration of the Facility Operating License:

a. Records of any drawing changes reflecting facility design modifications made to systems and equipment described in the Final Safety Analysis Report.

b. Records of new and irradiated fuel inventory, fuel transfers and assembly burnup histories.

c. Records of facility radiation and contamination surveys.

d. Records of radiation exposure for all individuals entering radiation control areas.

e. Records of gaseous and liquid radioactive material released to the environs.

f. Records of transient or operational cycles for those facility components designed for a limited number of transient cycles.

g. Records of training and qualifications for current members of the plant staff.

h. Records of in-service inspections performed pursuant to these Technical Specifications.

i. Records of Quality Assurance activities required by the QA manual.

j. Records of reviews performed for changes made to procedures or equipment or reviews of tests and experiments pursuant to 10 CFR 50.59.

k. Records of meetings of the PORC and the SRC.

l. Records for Environmental Qualification which are covered under the provisions of paragraph 6.13.

m. Records of secondary water sampling and water quality.

n. Records of analyses required by the radiological environmental monitoring program that would permit evaluation of the accuracy of the analysis at a later date. This should include procedures effective at specified times and records showing that these procedures were followed.

o. Records of service lives of all safety-related hydraulic snubbers including the date at which the service life commences and associated installation and maintenance records.

p. Records of reviews performed for changes made to the OFFSITE DOSE CALCULATION MANUAL and the PROCESS CONTROL PROGRAM.

6.11 RADIATION AND RESPIRATORY PROTECTION PROGRAM

6.11.1 Procedures for personnel radiation protection shall be prepared consistent with the requirements of 10 CFR 20 and shall be approved, maintained and adhered to for all operations involving personnel radiation exposure so as to maintain exposures as far below the limits specified in 10 CFR 20 as reasonably achievable. Pursuant to 10 CFR 20.1703, allowance may be made for the use of respiratory protection equipment in conjunction with activities authorized by the operating license for this plant in determining whether individuals in restricted areas are exposed to concentrations in excess of the limits specified in Appendix B, Table 1, Column 3 of 10 CFR 20.

6.12 HIGH RADIATION AREA

6.12.1 In lieu of the "control device" or "alarm signal" required by paragraph 20.1601 of 10 CFR 20, each high radiation area in which the intensity of radiation is greater than 100 mrem/hr** but less than 1000 mrem/hr** shall be barricaded and conspicuously posted as a high radiation area and entrance thereto shall be controlled by requiring issuance of a Radiation Work Permit (RWP)*. Any individual or group of individuals permitted to enter such areas shall be provided or accompanied by one or more of the following:

a. A radiation monitoring device which continuously indicates the radiation dose rate in the area.

b. A radiation monitoring device which continuously integrates the radiation dose rate in the area and alarms when a preset integrated dose is received. Entry into such areas with this monitoring device may be made after the dose rate level in the area has been established and personnel have been made knowledgeable of them.

c. An individual qualified in radiation protection procedures who is equipped with a radiation dose rate monitoring device. This individual shall be responsible for providing positive control over the activities within the area and shall perform periodic radiation surveillance at the frequency specified by the facility Health Physicist in the Radiation Work Permit.

---

* Health Physics Personnel shall be exempt from the RWP issuance requirements for entries into high radiation areas during the performances of their assigned radiation protection duties, provided they comply with approved radiation protection procedures for entry into high radiation areas.

** Measured at 30 centimeters (12 inches) from the source of radioactivity.

6.12.2* In addition to the requirements of 6.12.1 above, areas accessible to individuals with radiation levels such that an individual could receive in 1 hour a dose greater than 1000 mrem**, shall be provided with locked doors to prevent unauthorized entry, and the keys shall be maintained under the administrative control of the Shift Supervisor on duty and/or the plant Radiological and Environmental Services Manager or his designee.

6.13 ENVIRONMENTAL QUALIFICATION

6.13.1 Environmental qualification of electric equipment important to safety shall be in accordance with the provisions of 10 CFR 50.49. Pursuant to 10 CFR 50.49, Section 50.49 (d), the EQ Master List identifies electrical equipment requiring environmental qualification.

6.13.2 Complete and auditable records which describe the environmental qualification method used, for all electrical equipment identified in the EQ Master List, in sufficient detail to document the degree of compliance with the appropriate requirements of 10 CFR 50.49 shall be available and maintained at a central location. Such records shall be updated and maintained current as equipment is replaced, further tested, or otherwise further qualified.

6.14 CONTAINMENT LEAKAGE RATE TESTING PROGRAM

A program shall be established to implement the leakage rate testing of the containment as required by 10 CFR 50.54(o) and 10 CFR 50, Appendix J, Option B, as modified by approved exemptions. This program shall be in accordance with the guidelines contained in Regulatory Guide 1.163, "Performance-Based Containment Leak Test Program, Dated September 1995" as modified by the following exception:

a. ANS 56.8 - 1994, Section 3.3.1: WCCPPS isolation valves are not Type C tested.

The peak calculated primary containment internal pressure for the design basis loss of coolant accident, P_a, is 42.39 psig. The minimum test pressure is 42.42 psig.

The maximum allowable primary containment leakage rate, L_a, at P_a, shall be 0.1% of primary containment air weight per day.

Leakage acceptance criteria are:

a. Containment leakage rate acceptance criterion is $\leq 1.0\ L_a$. During the first unit startup following testing in accordance with this program, the leakage rate acceptance criteria are $\leq 0.60\ L_a$ for the Type B and C tests and $\leq 0.75\ L_a$ for Type A tests;

b. Air lock acceptance criteria are:

   1) Overall the air lock leakage rate is $\leq 0.05\ L_a$ when tested at $\geq P_a$,

   2) For each door, leakage rate is $\leq 0.01\ L_a$ when pressurized to $\geq P_a$.

c. Isolation valves sealed with the service water system leakage rate into containment acceptance criterion is ≤ 0.36 gpm per fan cooler unit

---

* Health Physics Personnel shall be exempt from the RWP issuance requirements for entries into high radiation areas during the performances of their assigned radiation protection duties, provided they comply with approved radiation protection procedures for entry into high radiation areas.

** Measured at 30 centimeters (12 inches) from the source of radioactivity.

1/2.0 LIMITING CONDITIONS FOR OPERATION AND SURVEILLANCE REQUIREMENTS

1/2.1 MONITORING INSTRUMENTATION

1.1.1 EXPLOSIVE GAS MONITORING INSTRUMENTATION

LCO:

The explosive gas monitoring instrumentation channels shown in Table 1.1.1-1 shall be OPERABLE with their alarm/trip setpoints set to ensure that the limits of Appendix B Technical Specification 1.3.1 are not exceeded.

APPLICABILITY: As shown in Table 1.1.1-1.

ACTION:

A. With an explosive gas monitoring instrumentation channel alarm/trip setpoint less conservative than required by the above Specification, declare the channel inoperable and take the ACTION shown in Table 1.1.1-1.

B. With less than the minimum number of explosive gas monitoring instrumentation channels OPERABLE, take the ACTION shown in Table 1.1.1-1. Exert best efforts to return the instruments to OPERABLE status within 30 days and, if unsuccessful, prepare and submit to the Commission, pursuant to Appendix B Technical Specification 4.3.1, a Special Report to explain why the inoperability was not corrected within this time frame.

2.1.1 SURVEILLANCE REQUIREMENTS

The explosive gas monitoring instrumentation channels shall be demonstrated OPERABLE by performance of the CHANNEL CHECK and CHANNEL CALIBRATION operations at the frequencies shown in Table 2.1.1-1.

TABLE 1.1.1-1

EXPLOSIVE GAS MONITORING INSTRUMENTATION			
INSTRUMENT	**MINIMUM CHANNELS OPERABLE**	**APPLICABILITY**	**ACTION**
1. WASTE GAS HOLDUP SYSTEM EXPLOSIVE GAS MONITORING SYSTEM			
a. Hydrogen Monitor	(1)	*	1
b. Oxygen Monitor	(1)	*	1

TABLE NOTATION

* During waste gas holdup system operation (treatment for primary system offgases).

ACTION 1 - With the number of channels OPERABLE one less than required by the Minimum Channels OPERABLE requirement, operation of this system may continue provided grab samples of waste tank on reuse or receipt are taken and analyzed daily. With both channels inoperable operation may continue provided grab samples of waste tank on reuse or receipt are taken and analyzed as follows:

a) Every 4 hours during degassing operations,

b) Daily during other operations.

TABLE 2.1.1-1

EXPLOSIVE GAS MONITORING INSTRUMENTATION SURVEILLANCE REQUIREMENTS			
INSTRUMENT	**CHANNEL CHECK**	**CHANNEL CALIBRATION**	**MODES IN WHICH SURVEILLANCE REQUIRED**
1. WASTE GAS HOLDUP SYSTEM EXPLOSIVE GAS MONITORING SYSTEM			
a. Hydrogen Monitor	D	M(1)	*
b. Oxygen Monitor	D	M(2)	*

TABLE NOTATION

* During waste gas holdup system operation (treatment for primary system off gases).

(1) The CHANNEL CALIBRATION shall include the use of standard gas samples containing:

1. Less than or equal to two volume percent hydrogen,

and

2. Greater than or equal to four volume percent hydrogen,

(2) The CHANNEL CALIBRATION shall include the use of standard gas samples containing:

1. Less than or equal to one volume percent oxygen,

and

2. Greater than or equal to four volume percent oxygen.

D Daily
M Monthly

Amendment No. 51,

1/2.2 RADIOACTIVE LIQUID EFFLUENTS

1.2.1 RADIOACTIVE LIQUID EFFLUENT HOLDUP TANKS*

LCO:

The quantity of radioactive material contained in each of the following unprotected outdoor tanks shall be limited to less than or equal to 10 curies, excluding tritium and dissolved or entrained noble gases.

a. Refueling Water Storage Tank**
b .Primary Water Storage Tank
c. 31 Monitor Tank
d. 32 Monitor Tank
e. Outside Temporary Tank***

APPLICABILITY: At all times.

ACTION:

With the quantity of radioactive material in any of the above listed tanks exceeding the above limit, immediately suspend all additions of radioactive material to the tank. Within 48 hours reduce the tank contents to within the limit, and describe the events leading to this condition in the next Annual Radioactive Effluent Release Report.

2.2.1 SURVEILLANCE REQUIREMENTS

The quantity of radioactive material contained in each of the listed tanks shall be determined to be less than or equal to 10 curies excluding tritium and dissolved or entrained noble gases, by analyzing a representative sample of the tank's contents at least once per month when radioactive materials are being added to the tank.

---

* Tanks included in this specification are those outdoor tanks that are not surrounded by liners, dikes, or walls capable of holding the tank contents and that do not have tank overflows and surrounding area drains connected to the liquid radwaste treatment system.

** After refueling operations, liquid from the reactor cavity will be sampled for radioactive material content prior to being pumped into the tank.

*** Liquid will be sampled for radioactive content prior to being pumped into the tank.

1/2.3 RADIOACTIVE GASEOUS EFFLUENTS

1.3.1 EXPLOSIVE GAS MIXTURE (Hydrogen rich systems not designed to withstand a hydrogen explosion)

LCO:

The concentration of oxygen in the waste gas holdup system shall be limited to less than or equal to 2% by volume whenever the hydrogen concentration exceeds 4% by volume.

APPLICABILITY: At all times.

ACTION:

A. With the concentration of oxygen in the waste gas holdup system greater than 2% by volume but less than or equal to 4% by volume, reduce the oxygen concentration to the above limits within 48 hours.

B. With the concentration of oxygen in the waste gas holdup system greater than 4% by volume and the hydrogen concentration greater than 2% by volume, immediately suspend all additions of waste gases to this portion of the system and reduce the concentration of oxygen to less than or equal to 2% by volume.

2.3.1 SURVEILLANCE REQUIREMENTS

The concentrations of hydrogen and oxygen in the waste gas holdup system shall be determined to be within the above limits by monitoring the waste gases in the waste gas holdup system with the hydrogen and oxygen monitors required OPERABLE by Appendix B Technical Specification Table 1.1.1-1.

1.3.2 GAS STORAGE TANKS

LCO:

The quantity of radioactivity contained in each gas storage tank shall be limited to less than or equal to 50,000 curies noble gases (considered as Xe-133).

APPLICABILITY: At all times.

ACTION:

With the quantity of radioactive material in any gas storage tank exceeding the above limit, immediately suspend all additions of radioactive material to the tank. Within 48 hours reduce the tank contents to within the limit, and describe the events leading to this condition in the next Annual Radioactive Effluent Release Report.

2.3.2 SURVEILLANCE REQUIREMENTS

The quantity of radioactive material contained in each gas storage tank shall be determined to be within the limit at least once per 24 hours when radioactive materials are being added to the tank in accordance with the methodology and parameters in the ODCM.

3.0 BASES

EXPLOSIVE GAS MONITORING INSTRUMENTATION (1/2.1.1)

The explosive gas monitoring instrumentation is provided to monitor and control the concentrations of potentially explosive gas mixtures in the waste gas holdup system. The OPERABILITY and use of this instrumentation is consistent with the requirements of General Design Criteria 60 of Appendix A to 10 CFR Part 50.

LIQUID HOLDUP TANKS (1/2.2.1)

The tanks listed in this Specification include all those outdoor tanks that are not surrounded by liners, dikes, or walls capable of holding the tank contents and that do not have tank overflows and surrounding area drains connected to the liquid radwaste treatment system.

Restricting the quantity of radioactive material contained in the specified tanks provides assurance that in the event of an uncontrolled release of the tanks' contents, the resulting concentrations would be less than the values given in Appendix B, Table 2, Column 2 to 10 CFR 20, at the nearest potable water supply and the nearest surface water supply in an UNRESTRICTED AREA.

EXPLOSIVE GAS MIXTURE (1/2.3.1)

This specification is provided to ensure that the concentration of potentially explosive gas mixtures contained in the waste gas holdup system is maintained below the flammability limits of hydrogen and oxygen. Maintaining the concentration of hydrogen and oxygen below their flammability limits provides assurance that the releases of radioactive materials will be controlled in conformance with the requirements of General Design Criterion 60 of Appendix A to 10 CFR Part 50.

GAS STORAGE TANKS (1/2.3.2)

The tanks included in this specification are those tanks for which the quantity of radioactivity contained is not limited directly or indirectly by another Technical Specification to a quantity that is less than the quantity that provides assurance that in the event of an uncontrolled release of the tank's contents, the resulting total body exposure to a MEMBER OF THE PUBLIC at the nearest SITE BOUNDARY will not exceed 0.5 rem in an event of 2 hours duration.

Restricting the quantity of radioactivity contained in each gas storage tank provides assurance that in the event of an uncontrolled release of the tank's contents, the resulting total body exposure to a MEMBER OF THE PUBLIC at the nearest SITE BOUNDARY will not exceed 0.5 rem. This is consistent with NUREG-0133.

4.0 ADMINISTRATIVE CONTROLS

4.1 RESPONSIBILITIES

The responsibilities of the Plant Operating Review Committee and the Safety Review Committee associated with the implementation of the Radiological Environmental Technical Specifications are delineated in the appropriate sections of Appendix A Technical Specification 6.5.

4.2 PROCEDURES AND PROGRAMS

Reference to implementation of the procedures and programs necessary for the implementation of the Radiological Environmental Technical Specifications are delineated in Appendix A Technical Specifications 6.8.1 and 6.8.4.

4.3 REPORTING REQUIREMENTS

4.3.1 SPECIAL REPORTS

The activities requiring the submittal of special reports are delineated in Appendix A Technical Specification 6.9.2. The ODCM also provides a listing of special reporting requirements.

4.3.2 ROUTINE REPORTS

4.3.2.1 ANNUAL RADIOACTIVE EFFLUENT RELEASE REPORT *

The Annual Radioactive Effluent Release Report covering the operation of the unit during the previous year of operation shall be submitted prior to May 1 of each year.

The report shall include a summary of the quantities of radioactive liquid and gaseous effluents and solid waste released from the unit. The material provided shall be (1) consistent with the objectives outlined in the ODCM and PCP and (2) in conformance with 10 CFR 50.36a and Section IV.B.1 of Appendix I to 10 CFR Part 50.

A full listing of the information to be contained in the Annual Radioactive Effluent Release Report is provided in the ODCM.

---

* A single submittal may be made for a multiple unit station. The submittal should combine those sections that are common to all units at the station; however, for units with separate radwaste systems, the submittal shall specify the releases of radioactive material from each unit.

4.3.2.2 ANNUAL RADIOLOGICAL ENVIRONMENTAL OPERATING REPORT*

An Annual Radiological Environmental Operating Report covering the operation of the unit during the previous calendar year shall be submitted prior to May 1 of each year.

The Annual Radiological Environmental Operating Reports shall include summaries, interpretations, and an analysis of trends of the results of the Radiological Environmental Monitoring Program for the report period. The material provided shall be consistent with the objectives outlined in (1) the ODCM and (2) Sections IV.B.2, IV.B.3, and IV.C of Appendix I to 10 CFR Part 50.

A full listing of the information to be contained in the Annual Radiological Environmental Operating Report is provided in the ODCM.

4.3.3 MAJOR CHANGES TO RADIOACTIVE LIQUID, GASEOUS AND SOLID WASTE TREATMENT SYSTEMS**

Licensee initiated major changes to the radioactive waste systems (liquid, gaseous and solid) shall be reported to the Commission in the Annual Radioactive Effluent Release Report for the period in which the evaluation was reviewed by the PORC. The discussion of each shall contain:

a. A summary of the evaluation that led to the determination that the change could be made in accordance with 10 CFR Part 50.59.

b. Sufficient detailed information to totally support the reason for the change without benefit of additional or supplemental information;

c. A detailed description of the equipment, components and processes involved and the interfaces with other plant systems;

---

* A single submittal may be made for a multiple unit station.

** The information called for in this Specification will be submitted as part of the annual FSAR update.

d. An evaluation of the change, which shows the predicted releases of radioactive materials in liquid and gaseous effluents and/or quantity of solid waste that differ from those previously predicted in the license application and amendments thereto;

e. An evaluation of the change, which shows the expected maximum exposures to an individual in the UNRESTRICTED AREA and to the general population that differ from those previously estimated in the license application and amendments thereto;

f. A comparison of the predicted releases of radioactive materials, in liquid and gaseous effluents and in solid waste, to the actual releases for the period prior to when the changes are to be made;

g. An estimate of the exposure to plant operating personnel as a result of the change; and

h. Documentation of the fact that the change was reviewed and found acceptable by the PORC.

4.4 RECORD RETENTION

Records associated with the Radiological Environmental Monitoring Program are to be retained as required by Appendix A Technical Specification 6.10.2.

4.5 PROCESS CONTROL PROGRAM (PCP)

4.5.1 The PCP shall be approved by the Commission prior to implementation.

4.5.2 Licensee initiated changes to the PCP:

1. Shall be documented and records of reviews performed shall be retained as required by Appendix A Technical Specification 6.10.2.p. This documentation shall contain:

   a. Sufficient information to support the change together with the appropriate analyses or evaluations justifying the change(s); and

b. A determination that the change will maintain the overall conformance of the solidified waste product to existing requirements of Federal, State, or other applicable regulations.

2. Shall become effective upon review and acceptance by the PORC and the approval of the Site Executive Officer.

3. Shall be submitted to the Commission as a part of or concurrent with the Annual Radioactive Effluent Release Report for the period of the report in which any change to the PCP was made. Each change shall be identified by marking in the margin of the affected pages, clearly indicating the area of the page that was changed, and shall indicate the date (e.g., month/year) the change was implemented.

4.6 OFFSITE DOSE CALCULATION MANUAL (ODCM)

4.6.1 The ODCM shall be approved by the Commission prior to implementation.

4.6.2 Licensee initiated changes to the ODCM:

1. Shall be documented and records of reviews performed shall be retained as required by Appendix A Technical Specification 6.10.2.p. This documentation shall contain:

a. Sufficient information to support the change together with the appropriate analyses or evaluations justifying the changes(s); and

b. A determination that the change will maintain the level of radioactive effluent control required pursuant to 10 CFR 20.1302, 40 CFR Part 190, 10 CFR 50.36a, and Appendix I to 10 CFR Part 50 and not adversely impact the accuracy or reliability of effluent dose or setpoint calculations;

2. Shall become effective upon review and acceptance by the PORC and the approval of the Site Executive Officer.

3. Shall be submitted to the Commission as a part of or concurrent with the Annual Radioactive Effluent Release Report for the period of the report in which any change to the ODCM was made. Each change shall be identified by marking in the margin of the affected pages, clearly indicating the area of the page that was changed, and shall indicate the date (e.g., month/year) the change was implemented.

4.7 MAP DEFINING UNRESTRICTED AREAS FOR RADIOACTIVE GASEOUS AND LIQUID EFFLUENTS

Information regarding radioactive gaseous and liquid effluents, which will allow identification of structures and release points as well as definition of UNRESTRICTED AREAS within the SITE BOUNDARY that are accessible to MEMBERS OF THE PUBLIC, shall be shown in Figure 4.7-1.

The definition of UNRESTRICTED AREA used in implementing the Radiological Effluent Technical Specifications has been expanded over that in 10 CFR 20.1003. The UNRESTRICTED AREA boundary may coincide with the exclusion (fenced) area boundary, as defined in 10 CFR 100.3(a), but the UNRESTRICTED AREA does not include areas over water bodies. For calculations performed pursuant to 10 CFR Part 50.36a, the concept of UNRESTRICTED AREAS, established at or beyond the SITE BOUNDARY, is utilized in the Radiological Effluent Controls to keep levels of radioactive materials in liquid and gaseous effluents as low as is reasonably achievable.

Figure 4.7-1

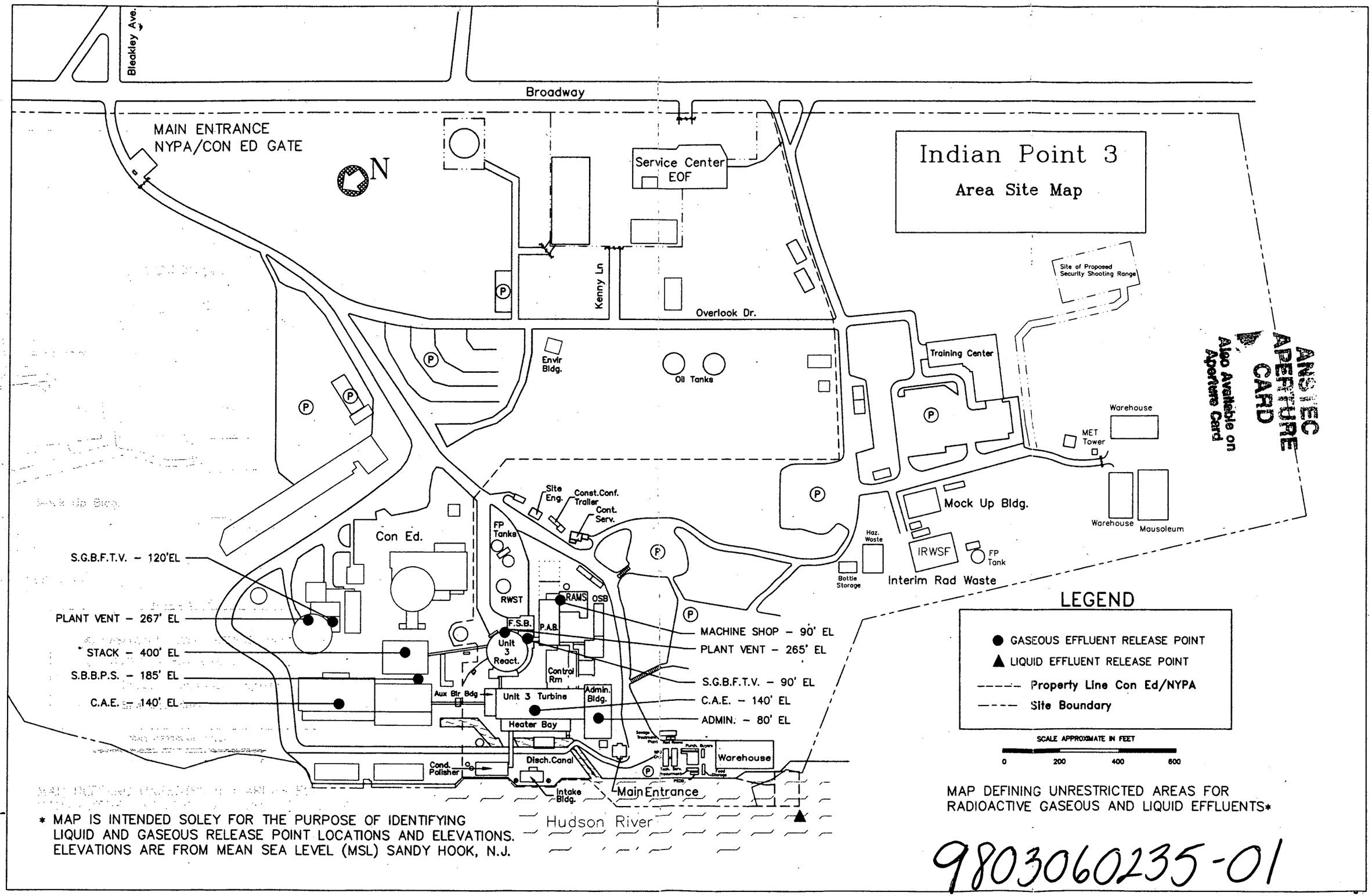
Indian Point 3
Area Site Map
Bleakley Ave.
Broadway
MAIN ENTRANCE
NYPA/CON ED GATE
N
Service Center
EOF
Kenny Ln
Overlook Dr.
Site of Proposed Security Shooting Range
Training Center
Envir Bldg.
Oil Tanks
Warehouse
MET Tower
Mock Up Bldg.
Warehouse
Mausoleum
Haz. Waste
IRWSF
FP Tank
Bottle Storage
Interim Rad Waste
Site Eng.
Const.Conf. Trailer
Cont. Serv.
Con Ed.
FP Tanks
RWST
RAMS
OSB
F.S.B.
P.A.B.
Unit 3 React.
Control Rm
Aux Blr Bdg
Unit 3 Turbine
Admin. Bldg.
Heater Bay
Disch.Canal
Cond. Polisher
Intake Bldg.
Warehouse
Main Entrance
Hudson River
S.G.B.F.T.V. – 120'EL
PLANT VENT – 267' EL
STACK – 400' EL
S.B.B.P.S. – 185' EL
C.A.E. – 140' EL
MACHINE SHOP – 90' EL
PLANT VENT – 265' EL
S.G.B.F.T.V. – 90' EL
C.A.E. – 140' EL
ADMIN. – 80' EL
LEGEND
GASEOUS EFFLUENT RELEASE POINT
LIQUID EFFLUENT RELEASE POINT
Property Line Con Ed/NYPA
Site Boundary
SCALE APPROXIMATE IN FEET
0
200
400
600
* MAP IS INTENDED SOLEY FOR THE PURPOSE OF IDENTIFYING LIQUID AND GASEOUS RELEASE POINT LOCATIONS AND ELEVATIONS. ELEVATIONS ARE FROM MEAN SEA LEVEL (MSL) SANDY HOOK, N.J.
MAP DEFINING UNRESTRICTED AREAS FOR RADIOACTIVE GASEOUS AND LIQUID EFFLUENTS*
ANSI/EC APERTURE CARD
Also Available on Aperture Card
9803060235-01

ATTACHMENT II TO IPN-98-018

SAFETY EVALUATION OF

PROPOSED CHANGES TO TECHNICAL SPECIFICATIONS

INCORPORATING RECOMMENDATIONS OF GENERIC LETTER 89-01

AND DRAFT PART 20 GENERIC LETTER

NEW YORK POWER AUTHORITY
INDIAN POINT 3 NUCLEAR POWER PLANT
DOCKET NO. 50-286
DPR-64

Section I - Description of Changes

The changes propose to revise Indian Point 3 Technical Specifications (Tech Specs or TS), Appendices A and B to the facility operating license, to implement the recommendations of NRC Generic Letter (GL) 89-01 (Reference 3) and the Draft Part 20 GL (Reference 4). The proposed changes, outlined below, maintain the current level of radiological effluent control, and are consistent with the guidance provided by the generic letters and NUREG-1301 (Reference 5). The proposed changes, including editorial changes and changes not related to the GLs, are presented and justified in the tables of Attachment III.

The changes implementing GL 89-01 include (1) relocating the procedural details involving radioactive effluent monitoring instrumentation, control of liquid and gaseous effluents, equipment requirements for liquid and gaseous effluents, and radiological environmental monitoring from the Radiological Environmental Technical Specifications (RETS contained in Part II of Appendix B to the operating license) to the appropriate section(s) of Appendix A, the Offsite Dose Calculation Manual (ODCM), or the Process Control Program (PCP) manual; (2) simplifying the reporting requirements specified in the Administrative Controls section of Appendix B, and relocating the details to the ODCM; (3) incorporating programmatic controls in the Administrative Controls section of Appendix A; (4) revising the administrative controls involving changes to the ODCM and PCP, including the addition of record retention requirements; and (5) updating and relocating the definitions of the ODCM and PCP. Specifications to remain in Appendix B include requirements for explosive gas monitoring instrumentation, limitations on the quantity of radioactivity in liquid effluent holdup tanks, and limitations on the explosive gas mixtures in the waste gas holdup system. The following Technical Specification changes implement GL 89-01:

- The definitions GASEOUS RADWASTE TREATMENT SYSTEM, PURGE - PURGING, SOURCE CHECK and VENTILATION EXHAUST TREATMENT SYSTEM are being relocated to the ODCM.

- The definitions OFFSITE DOSE CALCULATION MANUAL and PROCESS CONTROL PROGRAM are being updated and relocated to the ODCM;

- The definition SOLIDIFICATION is being relocated to the PCP;

- The radioactive liquid effluent monitoring instrumentation limiting conditions for operation (LCO) and surveillance requirements (Appendix B, Technical Specifications 2.1 and 3.1, respectively) and the corresponding basis will be relocated to the ODCM;

- The radioactive gaseous effluent monitoring instrumentation LCO and surveillance requirements (Appendix B, Technical Specifications 2.2 and 3.2, respectively) and the corresponding basis will be relocated to the ODCM;

- The explosive gas monitoring instrumentation LCO and surveillance requirements (part of Appendix B, Technical Specifications 2.2 and 3.2, respectively) and the corresponding basis will remain in Appendix B but will be renumbered;

- The liquid effluent concentration LCO and surveillance requirements (Appendix B, Technical Specifications 2.3.1 and 3.3.1, respectively) and the corresponding basis will be relocated to the ODCM;

- The dose from liquid effluents LCO and surveillance requirements, (Appendix B, Technical Specifications 2.3.2 and 3.3.2, respectively) and the corresponding basis will be relocated to the ODCM;

- The liquid radwaste treatment system LCO and surveillance requirements, (Appendix B, Technical Specifications 2.3.3 and 3.3.3, respectively) and the corresponding basis will be relocated to the ODCM;

- The liquid holdup tanks LCO and surveillance requirements (Appendix B, Technical Specifications 2.3.4 and 3.3.4, respectively) and the corresponding basis will remain in Appendix B but will be renumbered;

- The gaseous effluent dose rates LCO and surveillance requirements (Appendix B, Technical Specifications 2.4.1 and 3.4.1, respectively) and the corresponding basis section will be relocated to the ODCM;

- The dose from noble gases LCO and surveillance requirements (Appendix B, Technical Specifications 2.4.2 and 3.4.2, respectively) and the corresponding basis will be relocated to the ODCM;

- The dose From iodine-131, tritium, and radionuclides in particulate form LCO and surveillance requirements (Appendix B, Technical Specifications 2.4.3 and 3.4.3, respectively) and the corresponding basis will be relocated to the ODCM;

- The gaseous radwaste treatment system LCO and surveillance requirements (Appendix B, Technical Specifications 2.4.4 and 3.4.4, respectively) and the corresponding basis will be relocated to the ODCM;

- The explosive gas mixture LCO and surveillance requirements (Appendix B, Technical Specifications 2.4.5 and 3.4.5, respectively) and the corresponding basis will remain in Appendix B but will be renumbered;

- The gas storage tanks LCO and surveillance requirements (Appendix B, Technical Specifications 2.4.6 and 3.4.6, respectively) and the corresponding basis will remain in Appendix B but will be renumbered;

- The solid radioactive waste LCO and surveillance requirements (Appendix B, Technical Specifications 2.5 and 3.5, respectively) and the corresponding basis will be relocated to the PCP;

- The total dose LCO and surveillance requirements (Appendix B, Technical Specifications 2.6 and 3.6, respectively) and the corresponding basis will be relocated to the ODCM;

- The radiological environmental monitoring program LCO and surveillance requirements (Appendix B, Technical Specifications 2.7 and 3.7, respectively) and the corresponding basis will be relocated to the ODCM;

- The land use census LCO and surveillance requirements (Appendix B, Technical Specifications 2.8 and 3.8, respectively) and the corresponding basis will be relocated to the ODCM;

- The interlaboratory comparison program LCO and surveillance requirements (Appendix B, Technical Specifications 2.9 and 3.9, respectively) and the corresponding basis will be relocated to the ODCM;

- Appendix B, Technical Specifications 5.1, 5.2, and 5.3.1 entitled Responsibilities, Procedures and Programs, and Special Reports, respectively, will remain in Appendix B but will be renumbered;

- Appendix B, Technical Specification 5.3.2, Routine Reports, will be simplified and the details regarding the contents of the Radioactive Effluent Release Reports and the Radiological Operating Reports will be relocated to the ODCM;

- Appendix B, Technical Specification 5.4, Record Retention, will remain in Appendix B but will be renumbered;

- Appendix B, Technical Specification 5.5, Process Control Program, will remain in Appendix B but will be renumbered;

- Appendix B, Technical Specification 5.6, Offsite Dose Calculation Manual, will remain in Appendix B but will be renumbered;

- Appendix B, Technical Specification 5.7, Major Changes to Radioactive Liquid, Gaseous and Solid Waste Treatment Systems, will remain in Appendix B but will be renumbered;

- Appendix B, Technical Specification 5.8, Map Defining Unrestricted Areas For Radioactive Gaseous and Liquid Effluents, will remain in Appendix B but will be renumbered;

- Appendix A, Technical Specification 6.8 is being revised to include procedural and control requirements for the Radioactive Effluent Control and the Radiological Environmental Monitoring Programs;

- Appendix A, Technical Specification 6.9.2 is being revised to reference the new administrative controls outlined in Appendix A, Technical Specification 6.8.4, and to add special reporting requirements for inoperable explosive gas monitoring instrumentation;

- Appendix A, Technical Specification 6.10.2 is being revised to include retention requirements of reviews performed for ODCM and PCP changes.

The ODCM will be divided into two sections: Part I will contain the information being relocated from the RETS and will be known as Radiological Effluent Controls (REC); Part II will contain the information currently contained in the ODCM.

The implementation of the Draft Part 20 GL includes updating definitions, revising high radiation area controls, and updating references to 10 CFR 20.1 through 20.602 with the corresponding references to 20.1001 through 20.2402. The following Technical Specification changes implement the draft GL:

- The definition MAXIMUM PERMISSIBLE CONCENTRATION (MPC) is being replaced with the definition EFFLUENT CONCENTRATION.
- The definitions MEMBER(S) OF THE PUBLIC, SITE BOUNDARY and UNRESTRICTED AREA are being updated.
- The definition PROCESS CONTROL PROGRAM is being updated to reference the applicable Part 20 sections.
- New Appendix A Technical Specification 6.8.4.a.7 cites specific values from the new Part 20 Appendix B Tables.
- Appendix A, Technical Specification 6.9.1.3 is being updated to reference the applicable Part 20 sections.
- Appendix A, Technical Specifications 6.12.1 and 6.12.2 are being updated to incorporate selected portions of the guidance provided by the draft Part 20 GL.
- Appendix B, Technical Specifications 2.3.1, and 2.6 are being updated to reference the applicable Part 20 sections.
- Appendix B, Technical Specification Bases for Radioactive Liquid Effluent Monitoring Instrumentation, Gaseous Effluent Monitoring Instrumentation, and Liquid Effluents Concentration are being revised to allow the use of 10 times the values specified in the new Part 20 Appendix B tables and to update references to Part 20 sections.
- Appendix B, Technical Specification Bases for Liquid Holdup Tanks are being updated to reference the applicable Part 20 sections.
- Appendix B, Technical Specification Bases for Total Dose are being updated to reference the applicable Part 20 sections.
- Appendix B, Technical Specification Bases for Gaseous Effluent Dose Rate are being extensively revised to reflect the guidance provided by the draft GL.

- Appendix B, Technical Specification 5.8 and Figure 5.1-1 are being updated to reflect revised definitions and to reference the applicable Part 20 sections.

Other changes not specifically related to the GLs include:

- Definitions for all terms appearing in UPPER CASE in either Appendix A or Appendix B will be located in the Appendix A Definition section. Specifically, definitions OFFSITE DOSE CALCULATION MANUAL, PROCESS CONTROL PROGRAM, EFFLUENT CONCENTRATION, MEMBER(S) OF THE PUBLIC, SITE BOUNDARY, and UNRESTRICTED AREAS are being added to Appendix A.

- The definitions ACTION, CHANNEL CALIBRATION, CHANNEL CHECK, CHANNEL FUNCTIONAL TEST, LIQUID RADWASTE TREATMENT SYSTEM, OPERABLE - OPERABILITY, RATED THERMAL POWER, and THERMAL POWER are being added to the ODCM (rather than being relocated from Appendix B as with the other definitions).

- The definition VENTING is being deleted from the Technical Specifications.

- Procedural controls for the PCP are being added to Appendix A, Technical Specification 6.8.

- The detailed routine reporting requirements currently contained in Appendix B and being relocated to the ODCM are being reformatted.

- A new Special Reports section is being added to the ODCM.

- Other editorial changes are being made, including the reformatting and renumbering of Technical Specifications to remain in Appendix B.

- The Table of Contents, List of Tables, List of Figures are being revised to reflect all of the proposed changes.

Section II - Evaluation of Changes

The proposed changes implementing GL 89-01 and the Draft Part 20 GL involve 1) combining related LCO and surveillance requirements from Sections 2.0 and 3.0, respectively, of the Indian Point 3 (IP3) RETS and relocating this text to the new Radiological Effluent Controls (REC) section of the ODCM, 2) relocating the bases contained in Section 4.0 of the RETS to the ODCM REC, 3) relocating the detailed reporting requirements contained in Section 5.0 of the RETS to the ODCM REC, and 4) updating references to 10 CFR Part 20. Additional changes include formatting both the remaining RETS and the new REC to more closely model Standard Technical Specifications (STS), revising the frequency of the Radioactive Effluent Release Report in accordance with 10 CFR 50.36a, relocating definitions to Appendix A of the Technical Specifications and adding/deleting definitions as necessary, and adding a new Special Reports section to the ODCM.

The ODCM REC will be created as follows:

- The RETS Section 2 "OBJECTIVE" paragraphs are being deleted and the "SPECIFICATION" paragraphs are being spilt into "CONTROL(S)" and "ACTION(S)" paragraphs.

- The RETS Section 3 "APPLICABILITY" and "OBJECTIVE" paragraphs are being deleted and the text from the "SPECIFICATION" paragraphs is being relocated to immediately follow the "ACTION(S)" paragraphs.

- The routine reporting section contained in Section 5.0 of the RETS will be simplified, in accordance with GL 89-01, and remain in Appendix B.

- The detailed reporting requirements are being relocated to the ODCM REC in a new format which uses bullets. The new format helps to identify the information required in the reports and is easier to read than the current narrative format.

- A new Special Reports section is being added listing all of the special reporting requirements contained in the ODCM. These special reports are required by Appendix A Technical Specification 6.9.2.g and i.

The Radiological Environmental Technical Specifications (RETS) to remain in Appendix B are consistent with the guidance provided by GL 89-01. As with the proposed REC, the format is being changed to more closely model STS. The current Section 2 "OBJECTIVE" paragraphs are being deleted and the "SPECIFICATION" paragraphs are being spilt into "LCO" and "ACTION(S)" paragraphs. The Section 3 "APPLICABILITY" and "OBJECTIVE" paragraphs are being deleted and the text from the "SPECIFICATION" paragraph is being relocated to immediately follow the "ACTION(S)" paragraphs. The bases will remain and, as previously discussed above, the routine reporting section has been simplified.

The addition of Appendix A Technical Specification 6.8.4 follows the model Technical Specifications provided by GL 89-01.

Tables 1 through 5 in Attachment III identify the proposed changes. Table 1 identifies the changes to the text being relocated from the RETS to the ODCM REC in the order of appearance in the REC. The REC is a revised copy of the RETS. Table 2 identifies the changes to the PCP. Table 3 identifies the changes to Appendix A Technical Specifications. Table 4 identifies the changes to the Technical Specifications to remain in Appendix B. Table 5 identifies miscellaneous changes not fitting into the above categories. Attachment VI provides a markup copy of the ODCM, PCP, and Technical Specifications, Appendices A and B, with removed text lined out and new text in boldface font.

Justification for changes is provided in the tables of Attachment III. The changes are 1) consistent with the guidance provided in one or both generic letters, NUREG-1301, or provisions of 10 CFR; or 2) editorial. Editorial changes include the relocation of text, correction of typographical and punctuation errors, renumbering, reformatting, immaterial wording revisions/deletions/clarifications which do not change intent, and updating references.

These changes do not result in a change in the types or amounts of effluents released. The current level of radiological effluent control will be maintained. The changes do not impact the operation, design, configuration, or testing of plant structures, systems or components. The changes are being made in accordance with NRC guidance and continue to assure compliance with the applicable regulatory requirements.

Section III - No Significant Hazards Evaluation

In accordance with the requirements of 10 CFR 50.92, the enclosed application is judged to involve no significant hazards based on the following information:

1. Does the proposed license amendment involve a significant increase in the probability or consequences of any accident previously evaluated?

A. The proposed changes involve 1) combining related LCO and surveillance requirements from Sections 2.0 and 3.0, respectively, of the Indian Point 3 (IP3) RETS and relocating this text to the new Radiological Effluent Controls (REC) section of the ODCM, 2) relocating the bases contained in Section 4.0 of the RETS to the ODCM REC, 3) relocating the detailed reporting requirements contained in Section 5.0 of the RETS to the ODCM REC, and 4) updating references to 10 CFR Part 20. Additional changes include formatting both the remaining RETS and the new REC to more closely model Standard Technical Specifications (STS), revising the frequency of the Radioactive Effluent Release Report in accordance with 10 CFR 50.36a, relocating all definitions to Appendix A of the Technical Specifications and adding/deleting definitions as necessary, and adding a new Special Reports section to the ODCM. Most of the changes are 1) consistent with the guidance provided in one or both generic letters, NUREG-1301, or provisions of 10 CFR; or 2) editorial. Editorial changes include the relocation of text, correction of typographical and punctuation errors, renumbering, reformatting, immaterial wording revisions/deletions/clarifications which do not change intent, and updating references.

B. The changes do not result in a change in the types or amounts of effluents released. The current level of radiological effluent control will be maintained. The changes do not impact the operation, design, configuration, or testing of plant structures, systems or components. As such, the proposed changes do not involve a significant increase in the probability or consequences of any accident previously evaluated.

2. Does the proposed license amendment create the possibility of a new or different kind of accident from any previously evaluated?

A. The changes do not impact the operation, design, configuration, or testing of plant structures, systems or components. The current level of radiological effluent control will be maintained, and the changes do not result in a change in type or amount of radiological effluents released. As such, the proposed changes do not create the possibility of a new or different kind of accident from any previously evaluated.

3. Does the proposed amendment involve a significant reduction in a margin of safety?

A. The changes are being made in accordance with NRC guidance and continue to assure compliance with the applicable regulatory requirements including 10 CFR 20. The changes do not result in a change in the types or amounts of effluents released. The current level of radiological effluent control will be maintained. As such, the proposed changes do not involve a significant reduction in a margin of safety.

Section IV - Impact of Changes

These changes will not adversely impact the following:

1. ALARA Program
2. Security and Fire Protection programs
3. Emergency Plan
4. FSAR and SER Conclusions
5. Overall Plant Operations and the Environment

Section V - Conclusions

The incorporation of these changes: a) will not increase the probability nor the consequences of an accident or malfunction of equipment important to safety as previously evaluated in the Safety Analysis Report; b) will not increase the possibility for an accident or malfunction of a different type than any evaluated previously in the Safety Analysis Report; c) will not reduce the margin of safety as defined in the bases for any technical specification; and d) involves no significant hazards considerations as defined in 10 CFR 50.92; e) will not reduce the intent of any Quality Assurance Program commitments.

Section VI - References

1. Indian Point 3 Safety Evaluation Report (SER).
2. Indian Point 3 Safety Analysis Report (FSAR).
3. NRC Generic Letter 89-01, "Implementation of Programmatic Controls for Radiological Effluent Technical Specifications in the Administrative Controls Section of the Technical Specifications and the Relocation of Procedural Details of RETS to the Offsite Dose Calculation Manual or to the Process Control Program," January 31, 1989.
4. NRC Draft Generic Letter, "Guidance for Modification of Technical Specifications to Reflect (A) Revisions to 10 CFR Part 20, 'Standards for Protection Against Radiation' and 10 CFR 50.36a, 'Technical Specifications on Effluents from Nuclear Power Reactors,'" Federal Register dated December 23, 1993.
5. U. S. Nuclear Regulatory Commission NUREG-1301, "Offsite Dose Calculation Manual Guidance: Standard Radiological Effluent Controls for Pressurized Water Reactors," Generic Letter 89-01, Supplement No. 1, April 1991.
6. NYPA letter dated December 21, 1993 (IPN-93-163), "Implementation of Revised 10 CFR Part 20 Requirements."

ATTACHMENT III TO IPN-98-018

TABLE OF

PROPOSED CHANGES TO TECHNICAL SPECIFICATIONS,

ODCM, AND PCP INCORPORATING

RECOMMENDATIONS OF GENERIC LETTER 89-01

AND DRAFT PART 20 GENERIC LETTER

NEW YORK POWER AUTHORITY
INDIAN POINT 3 NUCLEAR POWER PLANT
DOCKET NO. 50-286
DPR-64

TABLE OF PROPOSED CHANGES

ITEM #	CURRENT DOCUMENT SECTION/ WORDING	PROPOSED DOCUMENT SECTION/WORDING	JUSTIFICATION FOR CHANGE(S)

Table 1: Changes to the ODCM/Radiological Environmental Controls

1.001	Not Applicable	REC 1.1, Definition ACTION: "That part of a Control that prescribes remedial measures required under designated conditions."	Each Control in the REC has an associated ACTION or ACTIONS. Therefore, the term is being defined and is consistent with NUREG-1301.
1.002	Not Applicable	REC 1.2, 1.3, and 1.4, Definitions CHANNEL CALIBRATION, CHANNEL CHECK, and CHANNEL FUNCTIONAL TEST, respectively.	These terms are used in the REC and the definitions were copied from those currently existing in Appendix A.
1.003	Not Applicable	REC 1.5, Definition EFFLUENT CONCENTRATION	Definition of a new term being added to both Appendix A and the ODCM REC as a result of the provisions of 10 CFR 20
1.004	RETS 1.1, Definition GASEOUS RADWASTE TREATMENT SYSTEM	REC 1.6, Definition GASEOUS RADWASTE TREATMENT SYSTEM	This definition is being relocated from Appendix B to ODCM REC. No wording changes are proposed.

TABLE OF PROPOSED CHANGES

ITEM #	CURRENT DOCUMENT SECTION/ WORDING	PROPOSED DOCUMENT SECTION/WORDING	JUSTIFICATION FOR CHANGE(S)
1.005	Not Applicable	REC 1.7, Definition LIQUID RADWASTE TREATMENT SYSTEM: "A LIQUID RADWASTE TREATMENT SYSTEM is any system designed and installed to reduce radioactive liquid effluents by collecting liquid radwaste and providing for processing capability and/or holdup for the purpose of reducing and monitoring the total radioactivity prior to release to the environment."	This definition is being added for a term used in the REC but not previously defined in the RETS. The definition is similar to the definition of Gaseous Radwaste Treatment System (RETS 1.1).
1.006	RETS 1.3, Definition MEMBER(S) OF THE PUBLIC: "MEMBER(S) OF THE PUBLIC shall include all persons who are not occupationally associated with the plant. This category does not include employees of either utility, their contractors or vendors. Also excluded from this category are persons who enter the site to service equipment or to make deliveries. This category does include persons who use portions of the site for recreational, occupational or other purposes not associated with the plant."	REC 1.9, Definition MEMBER(S) OF THE PUBLIC: "MEMBER(S) OF THE PUBLIC means any individual except when that individual receives an occupational dose."	This definition is being updated and relocated from Appendix B to both Appendix A and the ODCM REC. The changes are consistent with the draft Part 20 GL and 10 CFR 20.1003. Definitions for terms used in Appendix A and/or Appendix B will be contained in the Appendix A Definition Section.

TABLE OF PROPOSED CHANGES

ITEM #	CURRENT DOCUMENT SECTION/ WORDING	PROPOSED DOCUMENT SECTION/WORDING	JUSTIFICATION FOR CHANGE(S)
1.007	Not Applicable	REC 1.10, Definition OCCUPATIONAL DOSE Occupational dose means the dose received by an individual in the course of employment in which the individual's assigned duties involve exposure to radiation or to radioactive material from licensed and unlicensed sources of radiation, whether in the possession of the licensee or other person. Occupational dose does not include dose received from background radiation, from any medical administration the individual has received, from exposure administered to individuals administered radioactive material and released in accordance with 35.75, from voluntary participation in medical research programs, or as a member of the public.	This definition is being added to define a term used in the current Part 20 definition for Member of the public. This definition is consistent with the current Part 20.

TABLE OF PROPOSED CHANGES

ITEM #	CURRENT DOCUMENT SECTION/ WORDING	PROPOSED DOCUMENT SECTION/WORDING	JUSTIFICATION FOR CHANGE(S)
1.008	RETS 1.4, Definition OFFSITE DOSE CALCULATION MANUAL: "... doses due to radioactive ... environmental radiological monitoring program."	REC 1.11, Definition OFFSITE DOSE CALCULATION MANUAL: "... doses resulting from radioactive ... Radiological Environmental Monitoring Program. The ODCM shall also contain (1) the Radioactive Effluent Controls and Radiological Environmental Monitoring Programs required by Appendix A Technical Specification 6.8.4 and (2) descriptions of the information that should be included in the Annual Radiological Environmental Operating and Radioactive Effluent Release Reports required by Appendix B Technical Specifications 4.3.2.1 and 4.3.2.2."	This definition is being updated and relocated from Appendix B to both Appendix A and the ODCM REC. The changes are consistent with GL 89-01. Definitions for terms used in Appendix A and/or Appendix B will be contained in the Appendix A Definition Section.
1.009	Not Applicable	REC 1.12, Definition OPERABLE - OPERABILITY	This term is used in the REC and the definition was copied from the currently existing Appendix A definition OPERABLE. No wording changes are proposed.

TABLE OF PROPOSED CHANGES

ITEM #	CURRENT DOCUMENT SECTION/ WORDING	PROPOSED DOCUMENT SECTION/WORDING	JUSTIFICATION FOR CHANGE(S)
1.010	RETS 1.5, Definition PROCESS CONTROL PROGRAM: "... formula ... 10 CFR Part 20, 10 CFR Part 71 and ... of the radioactive waste."	REC 1.13, Definition PROCESS CONTROL PROGRAM: "... formulas ... 10 CFR Parts 20, 61 and 71, and ... of solid radioactive waste."	This definition is being updated and relocated from Appendix B to both Appendix A and the ODCM REC. The changes are consistent with GL 89-01. Reference to Part 20 is updated. Definitions for terms used in Appendix A and/or Appendix B will be contained in the Appendix A Definition Section.
1.011	RETS 1.6, Definition PURGE - PURGING	REC 1.14, Definition PURGE - PURGING	This definition is being relocated from Appendix B to the ODCM REC. No wording changes are proposed.
1.012	Not Applicable	REC 1.15, Definition RATED THERMAL POWER	This definition is being added for a term used in the REC but not previously defined in the RETS. The definition was copied from the currently existing Appendix A definition RATED THERMAL POWER. No wording changes are proposed.

TABLE OF PROPOSED CHANGES

ITEM #	CURRENT DOCUMENT SECTION/ WORDING	PROPOSED DOCUMENT SECTION/WORDING	JUSTIFICATION FOR CHANGE(S)
1.013	RETS 1.7, Definition SITE BOUNDARY: "... (see Figure 5.8-1) shall be that line beyond which the land is neither owned, nor leased, nor otherwise controlled by either site licensee."	REC 1.16, Definition SITE BOUNDARY: "... (see Figure 1-1) means that line beyond which the land or property is not owned, leased or otherwise controlled by either site licensee."	Editorial changes adding "or property" and referencing new figure number. Definition is consistent with the draft Part 20 GL and 10 CFR 20.1003. Definition being relocated from Appendix B to both Appendix A and the ODCM REC. Definitions for terms used in Appendix A and/or Appendix B will be contained in the Appendix A Definition Section.
1.014	RETS 1.9, Definition SOURCE CHECK	REC 1.17, Definition SOURCE CHECK	This definition is being relocated from Appendix B to the ODCM REC. No wording changes are proposed.
1.015	Appendix A, 1.1.2 THERMAL POWER	REC 1.18, Definition THERMAL POWER	This definition is being added for a term currently used in the existing RETS. The definition is being added to the ODCM REC.

TABLE OF PROPOSED CHANGES

ITEM #	CURRENT DOCUMENT SECTION/ WORDING	PROPOSED DOCUMENT SECTION/WORDING	JUSTIFICATION FOR CHANGE(S)
1.016	RETS 1.10, Definition UNRESTRICTED AREA: "... (see Figure 5.8-1) ... purposes. The UNRESTRICTED AREA boundary may coincide with the exclusion (fenced) area boundary, as defined in 10 CFR 100.3(a), but the UNRESTRICTED AREA does not include areas over water bodies. The concept of UNRESTRICTED AREAS, established at or beyond the SITE BOUNDARY, is utilized in the LIMITING CONDITIONS FOR OPERATION to keep levels of radioactive materials in liquid and gaseous effluents as low as is reasonably achievable, pursuant to 10 CFR 50.36a.	REC 1.19, Definition UNRESTRICTED AREA: "... (see Figure 1-1) ... purposes."	This definition is being updated and relocated from Appendix B to both Appendix A and the ODCM REC. The changes are consistent with the draft Part 20 GL. Definitions for terms used in Appendix A and/or Appendix B will be contained in the Appendix A Definition Section.
1.017	RETS 1.11, Definition VENTILATION EXHAUST TREATMENT SYSTEM	REC 1.20, Definition VENTILATION EXHAUST TREATMENT SYSTEM	This definition is being relocated from Appendix B to the ODCM REC. No wording changes are proposed.

TABLE OF PROPOSED CHANGES

ITEM #	CURRENT DOCUMENT SECTION/ WORDING	PROPOSED DOCUMENT SECTION/WORDING	JUSTIFICATION FOR CHANGE(S)
1.018	RETS 2.1, Specification A: "The radioactive ... Specification 2.3.1 ..."	REC 2.1, Control: "In accordance with Appendix A Technical Specification 6.8.4.a.1, the radioactive ... Control 2.3.1 ..."	Change to reference applicable new Technical Specification section consistent with NUREG-1301. Editorial change to update reference to "specification."
1.019	RETS 2.1, Applicability: "Applies to the operating status of the radioactive liquid effluent monitoring instrumentation as shown in Table 2.1-1."	REC 2.1, Applicability: "As shown in Table 2.1-1."	Editorial change eliminating unnecessary wording.
1.020	RETS 2.1, Specification B: "... above specification, without delay ..."	REC 2.1, Action A: "... above Control, immediately ..."	Editorial change to update reference to "specification." Editorial change consistent with NUREG-1301.
1.021	RETS 2.1, Specification C: "... in the next Semiannual Radioactive Effluent Release Report why ... in a timely manner."	REC 2.1, Action B: "... in the next Annual Radioactive Effluent Release Report, pursuant to Reporting Requirement 5.1, why ... within this time frame."	The frequency of the Radioactive Effluent Release Report is being changed from semiannually to annually in accordance with 10 CFR 50.36a. Reporting requirement details will be contained in Section 5.0 of the ODCM REC. Editorial change to clarify "timely manner."
1.022	Not Applicable	REC 2.1, Action C: "Report all deviations in the Annual Radioactive Effluent Release Report."	Additional action statement consistent with NUREG-1301.

TABLE OF PROPOSED CHANGES

ITEM #	CURRENT DOCUMENT SECTION/ WORDING	PROPOSED DOCUMENT SECTION/WORDING	JUSTIFICATION FOR CHANGE(S)
1.023	RETS Table 2.1-1, Items 1a, 1b, and 2a: "1a ... Line**" "1b ... Line" "2a ... Line"	REC Table 2.1-1, Items 1a, 1b, and 2a: "1a ... Line** (R-18 and R-61)" "1b ... Line (R-19)" "2a ... Line (R-16A, R-16B, R-23)"	Editorial change to identify referenced radiation monitors by number.
1.024	RETS Table 2.1-1, Items 4 and 5: "4 ... RECORDERS*" "5 ... DEVICES**"	REC Table 2.1-1, Items 4 and 5: "4 ... RECORDERS***" "5 ... DEVICES****"	Editorial change to avoid current duplication of table notations.
1.025	RETS Table 2.1-1, Table Notation **: "... specification ..."	REC Table 2.1-1, Table Notation ****: "... Control ..."	Editorial change to update reference to "specification."
1.026	RETS Table 2.1-1, Table Notation, Action 1a: "... Specification 3.3.1A ..."	REC Table 2.1-1, Table Notation, Action 1a: "... Radiological Effluent Control Surveillance Requirement ..."	Editorial change to update reference to "specification."
1.027	RETS Table 3.1-1, Table Notation ***: "... specification ..."	REC Table 3.1-1, Table Notation ***: "... Control ..."	Editorial change to update reference to "specification."
1.028	RETS Table 3.1-1, Table Notation (3): "... channel calibrations ... National Bureau of Standards ... with NBS traceable ... with NBS are acceptable."	REC Table 3.1-1, Table Notation (3): "... CHANNEL CALIBRATIONS ... National Institute of Standards and Technology (NIST) ... with NIST traceable ... with NIST are acceptable."	Editorial change to capitalize defined term. Editorial change to update reference to standard.

TABLE OF PROPOSED CHANGES

ITEM #	CURRENT DOCUMENT SECTION/ WORDING	PROPOSED DOCUMENT SECTION/WORDING	JUSTIFICATION FOR CHANGE(S)
1.029	RETS 2.2, Specification: "The radioactive ... Specification 2.4.1 ..."	REC 2.2, Control: "In accordance with Appendix A Technical Specification 6.8.4.a.1, the radioactive ... Control 2.4.1 ..."	Change to reference applicable new Technical Specification section consistent with NUREG-1301. Editorial change to update reference to "specification."
1.030	RETS 2.2, Applicability: "Applies to the operating status of the radioactive gaseous effluent monitoring instrumentation as shown in Table 2.2-1."	REC 2.2, Applicability: "As shown in Table 2.2-1."	Editorial change eliminating unnecessary wording.
1.031	RETS 2.2, Specification A: "... Specification, without delay ..."	REC 2.2, Action A: "... Control, immediately ..."	Editorial change updating reference to "specification" and editorial change consistent with NUREG-1301.
1.032	RETS 2.2, Specification B: "... Semiannual Radioactive Effluent Release Report why ..."	REC 2.2, Action B: "... Annual Radioactive Effluent Release Report, pursuant to Reporting Requirement 5.1, why ..."	The frequency of the Radioactive Effluent Release Report is being changed from semiannually to annually in accordance with 10 CFR 50.36a. Also, reference is made to the new ODCM REC section that will contain the reporting requirement details.
1.033	Not Applicable	REC 2.2, Action C: "Report all deviations in the Annual Radioactive Effluent Release Report."	Additional action statement consistent with NUREG-1301.

TABLE OF PROPOSED CHANGES

ITEM #	CURRENT DOCUMENT SECTION/ WORDING	PROPOSED DOCUMENT SECTION/WORDING	JUSTIFICATION FOR CHANGE(S)
1.034	RETS Table 2.2-1, Items 1a, 3a, 4a, 5a: 1a. "... Alarm" 3a. "... Monitor" 4a. "... Monitor" 5a. "... Monitor ..."	REC Table 2.2-1, Items 1a, 2a, 3a, 4a: 1a. "... Alarm (R-20)" 2a. "... Monitor (R-15)" 3a. "... Monitor (R-14, R-27, R-46 and R-59)" 4a. "... Monitor (R-12) ..."	Editorial changes to identify referenced radiation monitors by number. Also, the table item numbers are being changed to reflect the relocation of most of the table to the ODCM REC with the exception of RETS Table 2.2-1 Items 2a & 2b.
1.035	RETS Table 2.2-1, Table Notation *: "... operable ..."	REC Table 2.2-1, Table Notation *: "... OPERABLE ..."	Editorial change to capitalize defined term.
1.036	RETS Table 2.2-1, Table Notation, Action 6: "... with 2.4.6."	REC Table 2.2-1, Table Notation, Action 6: "... with Appendix B Technical Specification 1.3.2."	Editorial change to update referenced Technical Specification section.
1.037	RETS Table 2.2-1, Table Notation, Actions 11 and 12	REC Table 2.2-1, Table Notation, Actions 10 and 11	Editorial change reflecting renumbering of action statements due to relocation of current action statement 11 to ODCM.
1.038	RETS Table 3.2-1, Items 1a, 3a, 4a, 5a, Functional Test Column: 1a. "Q(1)***" 3a. "Q(1)***" 4a. "Q(1)***" 5a. "Q(1)***" "*** Will not include operation of automatic control functions."	REC Table 3.2-1, Items 1a, 2a, 3a, 4a, Functional Test Column: 1a. "Q(1)**" 2a. "Q(1)**" 3a. "Q(1)**" 4a. "Q(1)**" "** Will not include operation of automatic control of functions."	Editorial change reflecting "renumbering" of footnotes due to relocation of most of the table to the ODCM with the exception of RETS Table 3.2-1 Items 2a & 2b.

TABLE OF PROPOSED CHANGES

ITEM #	CURRENT DOCUMENT SECTION/ WORDING	PROPOSED DOCUMENT SECTION/WORDING	JUSTIFICATION FOR CHANGE(S)
1.039	RETS Table 3.2-1, Item 5a: 5a. "... Monitor - Providing ..."	REC Table 3.2-1, Item 4a: 4a. "... Monitor (R-12) Providing ..."	Editorial change to identify referenced radiation monitor by number.
1.040	RETS Table 3.2-1, Table Notation (2): "... channel calibrations ... National Bureau of Standards or ... with NBS traceable ... with NBS are ..."	REC Table 3.2-1, Table Notation (2): "... CHANNEL CALIBRATIONS ... National Institute of Standards and Technology (NIST) or ... with NIST traceable ... with NIST are ..."	Editorial change to capitalize defined term. Editorial change to update reference to standard.
1.041	RETS 2.3.1, Specification A: "The concentration ..."	REC 2.3.1, Control: "In accordance with Appendix A Technical Specifications 6.8.4.a.2 and 6.8.4.a.3, the concentration ..."	Change to reference applicable new Technical Specification section consistent with NUREG-1301.
1.042	RETS 2.3.1, Specification A: "... shall be limited to the concentrations specified in 10 CFR 20.106(a) for radionuclides other than dissolved or entrained noble gases as calculated under 10 CFR 20.106(a)...."	REC 2.3.1, Control: "... shall be limited to 10 times the concentration values specified in Appendix B, Table 2, Column 2 to 10 CFR 20.1001 - 20.2402 for radionuclides other than dissolved or entrained noble gases...."	Changes consistent with the draft Part 20 GL and the Authority's position regarding level of effluent control as stated in Reference 6.
1.043	RETS 2.3.1, Applicability: "Applies at all times to the concentration of radioactive material released in liquid effluents."	REC 2.3.1, Applicability: "At all times."	Editorial change eliminating unnecessary wording.

TABLE OF PROPOSED CHANGES

ITEM #	CURRENT DOCUMENT SECTION/ WORDING	PROPOSED DOCUMENT SECTION/WORDING	JUSTIFICATION FOR CHANGE(S)
1.044	RETS 2.3.1, Specification B: "... these limits, without delay ..."	REC 2.3.1, Action: "... the above limits, immediately ..."	Editorial changes reflecting relocation of limits to another subsection of Control 2.3.1, and editorial change consistent with NUREG-1301.
1.045	RETS 3.3.1, Specification A: "... Table 3.3-1."	REC 3.3.1, Surveillance Requirement A: "... Table 3.3.1-1."	Editorial change to Table number to identify that Table belongs with new REC section 3.3.1.
1.046	RETS 3.3.1, Specification B: "... Specification ..."	REC 3.3.1, Surveillance Requirement B: "... Control ..."	Editorial change to update reference to "specification."
1.047	RETS Table 3.3-1	REC Table 3.3.1-1	Editorial change to Table number to identify that Table belongs with new REC section 3.3.1.
1.048	RETS Table 3.3-1, Table Notation a: "... specifications ..."	REC Table 3.3.1-1, Table Notation a: "... Controls ..."	Editorial change to update reference to "specification."
1.049	RETS Table 3.3-1, Table Notation c: "... specification ... in the Semiannual Radioactive Effluent Release Report pursuant to Specification 5.3.3.1."	REC Table 3.3.1-1, Table Notation c: "... Control ... in the Annual Radioactive Effluent Release Report pursuant to Reporting Requirement 5.1."	Editorial change to update reference to "specification." Additionally, the frequency of the Radioactive Effluent Release Report is being changed from semiannually to annually in accordance with 10 CFR 50.36a. Also, reference is made to the new ODCM REC section which will contain all of the reporting requirement details.

TABLE OF PROPOSED CHANGES

ITEM #	CURRENT DOCUMENT SECTION/ WORDING	PROPOSED DOCUMENT SECTION/WORDING	JUSTIFICATION FOR CHANGE(S)
1.050	RETS 2.3.2, Specification A: "The dose ..."	REC 2.3.2, Control: "In accordance with Appendix A Technical Specifications 6.8.4.a.4 and 6.8.4.a.5, the dose ..."	Change to reference applicable new Technical Specification section consistent with NUREG-1301.
1.051	RETS 2.3.2, Applicability: "Applies at all times to the dose from radioactive material released in liquid effluents."	REC 2.3.2, Applicability: "At all times."	Editorial change eliminating unnecessary wording.
1.052	RETS 2.3.2, Specification B: "... pursuant to Specification 5.3.2 ..."	REC 2.3.2, Action: "... pursuant to Appendix A Technical Specification 6.9.2 ..."	Editorial change to reference proposed revised technical specification section.
1.053	RETS 2.3.3, Specification A: "The liquid ..."	REC 2.3.3, Control: "In accordance with Appendix A Technical Specification 6.8.4.a.6, the liquid ..."	Change to reference applicable new Technical Specification section consistent with NUREG-1301.
1.054	RETS 2.3.3, Applicability: "Applies at all times to the operation of the liquid radwaste treatment system."	REC 2.3.3, Applicability: "At all times."	Editorial change eliminating unnecessary wording.
1.055	RETS 2.3.3, Specification B: "... days pursuant to Specification 5.3.2 a ..."	REC 2.3.3, Action: "... days, pursuant to Appendix A Technical Specification 6.9.2, a ..."	Editorial change to reference proposed revised technical specification section and editorial changes involving punctuation.
1.056	RETS 3.3.3: "... in the ODCM."	REC 3.3.3: "... in the ODCM when the liquid radwaste treatment systems are not being fully utilized."	Change consistent with NUREG-1301.

TABLE OF PROPOSED CHANGES

ITEM #	CURRENT DOCUMENT SECTION/ WORDING	PROPOSED DOCUMENT SECTION/WORDING	JUSTIFICATION FOR CHANGE(S)
1.057	RETS 2.4.1, Specification A: "The dose ..."	REC 2.4.1, Controls: "In accordance with Appendix A Technical Specifications 6.8.4.a.3 and 6.8.4.a.7, the dose ..."	Change to reference applicable new Technical Specification section consistent with NUREG-1301.
1.058	RETS 2.4.1, Specifications A.1 and A. 2: "... equal to 500 mrems/yr ... equal to 3000 mrems/yr ... equal to 1500 mrems/yr ..."	REC 2.4.1, Controls 1 and 2: "... equal to a dose rate of 500 mrems/yr ... equal to a dose rate of 3000 mrems/yr ... equal to a dose rate of 1500 mrems/yr ..."	Editorial change to clarify entity being measured.
1.059	RETS 2.4.1, Applicability: "Applies at all times to the dose rate due to radioactive materials released in gaseous effluents."	REC 2.4.1, Applicability: "At all times."	Editorial change eliminating unnecessary wording.
1.060	RETS 2.4.1, Specification B: "... without delay ..."	REC 2.4.1, Action: "... immediately ..."	Editorial change consistent with NUREG-1301.
1.061	RETS 3.4.1, Specification B: "... Table 3.4-1."	REC 3.4.1, Surveillance Requirement B: "... Table 3.4.1-1."	Editorial change to identify that Table belongs with new REC section 3.4.1.
1.062	RETS Table 3.4-1	REC Table 3.4.1-1	Editorial change to Table number to identify that Table belongs with new REC section 3.4.1.
1.063	RETS Table 3.4-1, Table Notation a: "... specifications ..."	REC Table 3.4.1-1, Table Notation a: "... Controls ..."	Editorial change to update reference to "specifications."

TABLE OF PROPOSED CHANGES

ITEM #	CURRENT DOCUMENT SECTION/ WORDING	PROPOSED DOCUMENT SECTION/WORDING	JUSTIFICATION FOR CHANGE(S)
1.064	RETS Table 3.4-1, Table Notation b: "... specification ... Semiannual Radioactive Effluent Release Report pursuant to Specification 5.3.3.1."	REC Table 3.4.1-1, Table Notation b: "... Control ... Annual Radioactive Effluent Release Report pursuant to Reporting Requirement 5.1."	Editorial change to update reference to "specification." Additionally, the frequency of the Radioactive Effluent Release Report is being changed from semiannually to annually in accordance with 10 CFR 50.36a. Also, reference is made to the new ODCM REC section which will contain the reporting requirement details.
1.065	RETS Table 3.4-1, Table Notation d: "... in is use."	REC Table 3.4.1-1, Table Notation d: "... is in use."	Editorial change transposing words.
1.066	RETS Table 3.4-1, Table Notation f: "... Specification ..."	REC Table 3.4.1-1, Table Notation f: "... Controls ..."	Editorial change to update reference to "specifications."
1.067	RETS 2.4.2, Specification A: "The air ..."	REC 2.4.2, Controls: "In accordance with Appendix A Technical Specifications 6.8.4.a.5 and 6.8.4.a.8, the air ..."	Change to reference applicable new Technical Specification section consistent with NUREG-1301.
1.068	RETS 2.4.2, Applicability: "Applies at all times to air dose due to noble gases released in gaseous effluents."	REC 2.4.2, Applicability: "At all times."	Editorial change eliminating unnecessary wording. Consistent with NUREG-1301.
1.069	RETS 2.4.2, Specification B: "... Specification 5.3.2 ..."	REC 2.4.2, Action: "... Appendix A Technical Specification 6.9.2 ..."	Editorial change to reference renumbered TS section.

TABLE OF PROPOSED CHANGES

ITEM #	CURRENT DOCUMENT SECTION/ WORDING	PROPOSED DOCUMENT SECTION/WORDING	JUSTIFICATION FOR CHANGE(S)
1.070	RETS 2.4.3, Specification A: "The dose ..."	REC 2.4.3, Controls: "In accordance with Appendix A Technical Specifications 6.8.4.a.5 and 6.8.4.a.9, the dose ..."	Change to reference applicable new Technical Specification section consistent with NUREG-1301.
1.071	RETS 2.4.3, Applicability: "Applies at all times to the dose due to iodine-131, tritium and all radionuclides in particulate form with half-lives greater than 8 days in gaseous effluents."	REC 2.4.3, Applicability: "At all times."	Editorial change eliminating unnecessary wording. Consistent with NUREG-1301.
1.072	RETS 2.4.3, Specification B: "... release of iodine-131, tritium and ... effluents, exceeding ... to Specification 5.3.2 a Special ..."	REC 2.4.3, Action: "... release of iodine-131, tritium, and ... effluents exceeding ... Appendix A Technical Specification 6.9.2, a Special ..."	Editorial changes correcting punctuation and reference to applicable technical specification section.
1.073	RETS 2.4.4, Specification A: "The appropriate ..."	REC 2.4.4, Control: "In accordance with Appendix A Technical Specification 6.8.4.a.6, the appropriate ..."	Change to reference applicable new Technical Specification section consistent with NUREG-1301.
1.074	RETS 2.4.4, Specification A: "... to any organ in a 31 day period."	REC 2.4.4, Control: "... to any organ of a MEMBER OF THE PUBLIC in a 31 day period."	Editorial change clarifying whose organ and consistent with NUREG-1301.
1.075	RETS 2.4.4, Applicability: "Applies at all times to the operation of the gaseous radwaste treatment system."	REC 2.4.4, Applicability: "At all times."	Editorial change eliminating unnecessary wording. Consistent with NUREG-1301.

TABLE OF PROPOSED CHANGES

ITEM #	CURRENT DOCUMENT SECTION/ WORDING	PROPOSED DOCUMENT SECTION/WORDING	JUSTIFICATION FOR CHANGE(S)
1.076	RETS 2.4.4, Specification B: "... Specification 5.3.2 a Special ..."	REC 2.4.4, Action: "... Appendix A Technical Specification 6.9.2, a Special..."	Editorial change to reference applicable technical specification section.
1.077	RETS 3.4.4, Specification: "... ODCM."	REC 3.4.4: "... ODCM when the GASEOUS RADWASTE TREATMENT SYSTEMS are not being fully utilized."	Change consistent with NUREG-1301.
1.078	RETS 2.5, Solid Radioactive Waste, Entire Section RETS 3.5, Solid Radioactive Waste Surveillance Requirements, Entire Section	REC 2.5/3.5, Solid Radioactive Waste, Controls and Surveillance Requirements: "These sections are contained in the PCP."	The solid radioactive waste specifications/controls are being relocated to the PCP. Referral to the PCP is being made in the ODCM REC to facilitate discovery and to maintain the numbering scheme of the REC sections close to, if not exactly the same, as the RETS sections which they are coming from.
1.079	RETS 2.6, Specification A: "Limit ... to radiation ..."	REC 2.6, Control: "In accordance with Appendix A Technical Specification 6.8.4.a.10, limit ... to direct radiation ..."	Change to reference applicable new Technical Specification section consistent with NUREG-1301. Change clarifying radiation type consistent with NUREG-1301.

TABLE OF PROPOSED CHANGES

ITEM #	CURRENT DOCUMENT SECTION/ WORDING	PROPOSED DOCUMENT SECTION/WORDING	JUSTIFICATION FOR CHANGE(S)
1.080	RETS 2.6, Applicability: "Applies at all times to the annual dose or dose commitment from releases of radioactivity and to radiation from uranium fuel cycle sources."	REC 2.6, Applicability: "At all times."	Editorial change eliminating unnecessary wording. Consistent with NUREG-1301.
1.081	RETS 2.6, Specification B: "... Specification 2.3.2.A ... made including ... tanks to ... limits identified in the Objective of Specification 2.6 have been exceeded."	REC 2.6, Action A: "... Control 2.3.2.A ... made, including ... tanks, to ... limits have been exceeded."	Editorial changes updating reference to "specification," inserting commas and deleting reference to deleted section.
1.082	RETS 2.6, Specification C: "... case in lieu ... Specification 5.3.2 ..."	REC 2.6, Action B: "... case, in lieu ... Appendix A Technical Specification 6.9.2 ..."	Editorial change inserting comma and updating reference to Technical Specification section.
1.083	RETS 2.6, Specification C: "... Report as defined in 10 CFR Part 20.405c ..."	REC 2.6, Action B: "... Report, as defined in 10 CFR Part 20.2203(a)(4) ..."	Editorial changes inserting comma and updating reference to 10 CFR 20.
1.084	RETS 2.6, Specification C: "... involved, or the ..."	REC 2.6, Action B: "... involved, and the ..."	Additional requirement consistent with NUREG-1301. This clause has been interpreted as "and" rather than "or" in the past.
1.085	RETS 2.6, Specification C: "... report is considered ..."	REC 2.6, Action B: "... report within 30 days is considered ..."	Additional constraint which clarifies "timely" and is consistent with the time frame allowed for other Special Reports referenced in the ODCM.

TABLE OF PROPOSED CHANGES

ITEM #	CURRENT DOCUMENT SECTION/ WORDING	PROPOSED DOCUMENT SECTION/WORDING	JUSTIFICATION FOR CHANGE(S)
1.086	RETS 3.6, Specification A: "... Specification 3.3.2 ..."	REC 3.6, Surveillance Requirement A: "... Surveillance Requirements 3.3.2 ..."	Editorial change updating reference to "specifications."
1.087	RETS 3.6, Specification B: "... Specification 2.6."	REC 3.6, Surveillance Requirement B: "... Control 2.6."	Editorial change updating reference to "specification."
1.088	Not Applicable	REC 2.7, Control: "In accordance with Appendix A Technical Specification 6.8.4.b.1, the Radiological Environmental Monitoring Program shall be conducted as specified in Table 2.7-1."	Addition of Control statement consistent with NUREG-1301.
1.089	RETS 2.7, Applicability: "Applies at all times to the performance of the radiological environmental monitoring program."	REC 2.7, Applicability: "At all times."	Editorial change eliminating unnecessary wording. Consistent with NUREG-1301.
1.090	RETS 2.7, Specification A: "... Specification 5.3.3.2 ..."	REC 2.7, Action A: "... Reporting Requirement 5.2 ..."	Editorial change to reference new applicable REC section.
1.091	RETS 2.7, Specification B: "... submit, to ... Specification 5.3.2 ... Specifications 2.3.2 ... Specifications 2.3.2 ..."	REC 2.7, Action B: "... submit to ... Appendix A Technical Specification 6.9.2 ... Controls 2.3.2 ... Controls 2.3.2 ..."	Editorial changes deleting comma, updating reference to Technical Specification section, and updating references to "specifications."

TABLE OF PROPOSED CHANGES

ITEM #	CURRENT DOCUMENT SECTION/ WORDING	PROPOSED DOCUMENT SECTION/WORDING	JUSTIFICATION FOR CHANGE(S)
1.092	RETS 2.7, Specification C: "... Specification 5.3.3.1 ... Semiannual Radioactive ..."	REC 2.7, Action C: "... Reporting Requirement 5.1 ... Annual Radioactive ..."	Editorial change to reference new applicable section, and change to frequency of the Radioactive Effluent Release Report in accordance with 10 CFR 50.36a.
1.093	RETS, 3rd page of Table 2.7-1, 2nd Column: "... Locations"	REC, 3rd page of Table 2.7-1, 2nd Column: "... Locations[a]"	Editorial change to add inadvertently missing notation letter "a".
1.094	RETS Table 2.7-1, Item 4a, 2nd Column: "... 3 location ... where dose are ..."	REC Table 2.7-1, Item 4a, 2nd Column: "... 3 locations ... where doses are ..."	Editorial changes making grammatical corrections.
1.095	RETS Table 2.7-1, Item 4a, 3rd Column: "... pasture monthly ..."	REC Table 2.7-1, Item 4a, 3rd Column: "... pasture; monthly ..."	Editorial correction adding semi-colon.
1.096	RETS Table 2.7-1, Item 4b, 2nd Column: "... and or recreationally ..."	REC Table 2.7-1, Item 4b, 2nd Column: "... and/or recreationally ..."	Editorial correction adding "/".
1.097	RETS Table 2.7-1, Table Notation a: "... Specification 5.3.3.2 ... Specification 5.3.3.1 ... Semiannual Radioactive ..."	REC Table 2.7-1, Table Notation a: "... Reporting Requirement 5.2 ... Reporting Requirement 5.1 ... Annual Radioactive ..."	Editorial changes to reference new applicable sections and changing frequency of the Radioactive Effluent Release Report from semiannually to annually in accordance with 10 CFR 50.36a.
1.098	RETS Table 3.7-1, Table Notation a: "... Specification 5.3.2.2."	REC Table 3.7-1, Table Notation a: "... Reporting Requirement 5.2."	Editorial change referencing the new applicable section.

TABLE OF PROPOSED CHANGES

ITEM #	CURRENT DOCUMENT SECTION/ WORDING	PROPOSED DOCUMENT SECTION/WORDING	JUSTIFICATION FOR CHANGE(S)
1.099	RETS Table 3.7-1, Table Notation c: "... specifications ... Specification 5.3.2.2."	REC Table 3.7-1, Table Notation c: "... Controls ... Reporting Requirement 5.2."	Editorial changes updating reference to "specification" and applicable section.
1.101	RETS 2.8, Specification A: "Conduct ... Specifications ..."	REC 2.8, Control: "In accordance with Appendix A Technical Specification 6.8.4.b.2, conduct ... The Controls ..."	Change to reference applicable new Technical Specification section consistent with NUREG-1301, and editorial change to update reference to "specification."
1.102	RETS 2.8, Applicability: "Applies at all times to the land use census, which identifies the nearest milk animal, the nearest residence and the nearest garden."	REC 2.8, Applicability: "At all times."	Editorial change eliminating unnecessary wording. Consistent with NUREG-1301.
1.103	RETS 2.8, Specification B: "... Specification 3.4.3 ... Semiannual Radioactive Effluent Release Report, pursuant to Specification 5.3.3.1."	REC 2.8, Action A: "... Control 3.4.3 ... Annual Radioactive Effluent Release Report, pursuant to Reporting Requirement 5.1."	Editorial changes updating reference to "specification," revising the frequency of the Radioactive Effluent Release Report from semiannually to annually in accordance with 10 CFR 50.36a, and referencing the new applicable section.
1.104	RETS 2.8, Specification C: "... Specification 2.7 ... radiological environmental monitoring program ... Specification 5.3.3.1. Identify ... Semiannual ..."	REC 2.8, Action B: "... Control 2.7 ... Radiological Environmental Monitoring Program ... Reporting Requirement 5.1, identify ... Annual ..."	Editorial changes updating reference to "specification," capitalizing name of program, revising the frequency of the Radioactive Effluent Release Report, and referencing the new applicable section.

TABLE OF PROPOSED CHANGES

ITEM #	CURRENT DOCUMENT SECTION/ WORDING	PROPOSED DOCUMENT SECTION/WORDING	JUSTIFICATION FOR CHANGE(S)
1.105	RETS 3.8, Specification: "... survey, or by ... shall bs ... Specification 5.3.3.2."	REC 3.8, Surveillance Requirements: "... survey, aerial survey or by ... shall be ... Reporting Requirement 5.2."	Editorial change to add "aerial survey" to match with basis words. This is also consistent with NUREG-1301. Other editorial changes to correct typographical error ("bs") and to reference new applicable section.
1.106	RETS 2.9, Specification A: "Perform ..."	REC 2.9, Control: "In accordance with Appendix A Technical Specification 6.8.4.b.3, perform ..."	Change to reference applicable new Technical Specification section consistent with NUREG-1301.
1.107	RETS 2.9, Applicability: "Applies to the performance of the environmental Interlaboratory Comparison Program."	REC 2.9, Applicability: "At all times."	Editorial change eliminating unnecessary wording. Consistent with NUREG-1301.
1.108	RETS 2.9, Specification B: "... Specification 5.3.3.2."	REC 2.9, Action: "... Reporting Requirement 5.2."	Editorial change referencing the new applicable section.
1.109	RETS 3.9, Specification: "... Specification 5.3.3.2."	REC 3.9, Surveillance Requirements: "... Reporting Requirement 5.2."	Editorial change referencing the new applicable section.

TABLE OF PROPOSED CHANGES

ITEM #	CURRENT DOCUMENT SECTION/ WORDING	PROPOSED DOCUMENT SECTION/WORDING	JUSTIFICATION FOR CHANGE(S)
1.110	RETS 4.0, Bases for Radioactive Liquid Effluent Monitoring Instrumentation: "... exceeding the limits of 10 CFR Part 20."	REC 4.0, Bases for Radioactive Liquid Effluent Monitoring Instrumentation: "... exceeding 10 times the EFFLUENT CONCENTRATION values specified in Appendix B, Table 2, Column 2 to 10 CFR Parts 20.1001 - 20.2402."	Changes consistent with the draft Part 20 GL and the Authority's position regarding level of effluent control as stated in Reference 6.
1.111	RETS 4.0, Bases for Radioactive Gaseous Effluent Monitoring Instrumentation: "... the releases of radioactive materials in gaseous effluents during actual or potential releases of radioactive materials in gaseous effluents during actual or potential releases of gaseous effluents."	REC 4.0, Bases for Radioactive Gaseous Effluent Monitoring Instrumentation: "... the releases of radioactive materials in gaseous effluents during actual or potential releases of radioactive materials in gaseous effluents."	Editorial change to delete duplicate wording.

TABLE OF PROPOSED CHANGES

ITEM #	CURRENT DOCUMENT SECTION/ WORDING	PROPOSED DOCUMENT SECTION/WORDING	JUSTIFICATION FOR CHANGE(S)
1.112	RETS 4.0, Bases for Radioactive Gaseous Effluent Monitoring Instrumentation: "... exceeding the limits of 10 CFR Part 20. This instrumentation also includes provisions for monitoring (and controlling) the concentrations of potentially explosive gas mixtures in the waste gas holdup system. The OPERABILITY ..."	REC 4.0, Bases for Radioactive Gaseous Effluent Monitoring Instrumentation: "... exceeding the limits of 10 CFR Parts 20. The OPERABILITY ..."	Editorial change to delete non-applicable text. Explosive gas mixture monitoring instrumentation specifications will remain in Appendix B while gaseous effluent monitoring instrumentation requirements will be relocated to the ODCM REC.

TABLE OF PROPOSED CHANGES

ITEM #	CURRENT DOCUMENT SECTION/ WORDING	PROPOSED DOCUMENT SECTION/WORDING	JUSTIFICATION FOR CHANGE(S)
1.113	RETS 4.0, Bases for Liquid Effluents Concentration: "These specifications are ... materials, released ... than the concentration levels specified in 10 CFR Part 20, Appendix B, Table II, Column 2 ... additional assurance ... (2) the limits of 10 CFR Part 20.106(e) to the population ... controlling radioisotope and its MPC ... water using the methods described in International Commission on Radiological Protection (ICRP) Publication 2. This specification applies to the release of liquid effluents from all reactors at the site."	REC 4.0, Bases for Liquid Effluents Concentration: "This control is ... materials released ... than 10 times the EFFLUENT CONCENTRATION values specified in Appendix B, Table 2, Column 2 to 10 CFR Parts 20.1001 - 20.2402. This control provides operational flexibility for releasing liquid effluents in concentrations to follow the Section II.A and II.C design objectives of Appendix I to 10 CFR Part 50 ... reasonable assurance ... (2) the restrictions authorized by 10 CFR Part 20.1301(e) ... controlling radionuclide and its EFFLUENT CONCENTRATION in air ... water. This control does not affect the requirement to comply with the annual limitations of 10 CFR 20.1301(a). This control applies to the release of radioactive materials in liquid effluents from all units at the site.	Editorial changes include substituting "control" for "specification(s)" and correcting punctuation. Other changes are consistent with the draft Part 20 GL and the Authority's position regarding level of effluent control as stated in Reference 6.

TABLE OF PROPOSED CHANGES

ITEM #	CURRENT DOCUMENT SECTION/ WORDING	PROPOSED DOCUMENT SECTION/WORDING	JUSTIFICATION FOR CHANGE(S)
1.113 con't		The required detection capabilities for radioactive materials in liquid waste samples are tabulated in terms of the lower limits of detection (LLDs). Detailed discussion of the LLD and other detection limits can be found in Currie, L.A., 'Lower Limit of Detection: Definition and Elaboration of a Proposed Position for Radiological Effluent and Environmental Measurements,' NUREG/CR-4007 (September 1984), and in the HASL Procedures Manual, HASL-300 (revised annually)."	
1.114	RETS 4.0, Bases for Dose from Liquid Effluents: "These specifications are ... The Limiting Condition for Operation implements ... This specification applies ..."	REC 4.0, Bases for Dose from Liquid Effluents: "This Control is ... The Control statement implements ... This Control applies ..."	Editorial changes updating references to "specifications."
1.115	RETS 4.0, Bases for Liquid Radwaste Treatment System: "... This specification implements ... This specification applies ..."	REC 4.0, Bases for Liquid Radwaste Treatment System: "... This Control implements ... This Control applies ..."	Editorial changes updating references to "specifications."
1.116	RETS 4.0, Bases for Gaseous Effluents Dose Rate	REC 4.0, Bases for Gaseous Effluents Dose Rate	This bases section was extensively revised to be consistent with the draft Part 20 GL.

TABLE OF PROPOSED CHANGES

ITEM #	CURRENT DOCUMENT SECTION/ WORDING	PROPOSED DOCUMENT SECTION/WORDING	JUSTIFICATION FOR CHANGE(S)
1.117	RETS 4.0, Bases for Dose from Noble Gases: "These specifications are ... The Limiting Condition for Operation implements ... These specification apply ..."	REC 4.0, Bases for Dose from Noble Gases: "This Control is ... The Control statements implement ... This Control applies ..."	Editorial changes updating references to "specifications."
1.118	RETS 4.0, Bases for Dose From Iodine-131, Tritium, and Radionuclides in Particulate Form: "These specifications are ... The Limiting Conditions for Operation are ... The limiting condition for operation statements ... Section II.A ... rate specifications for ... This specification applies ..."	REC 4.0, Bases for Dose From Iodine-131, Tritium, and Radionuclides in Particulate Form: "This Control is ... The Controls are ... The Action statements ... Section III.A ... rate Controls for ... This Control applies ..."	Editorial changes updating references to "specifications" and correction to section reference of Appendix I. The changes are consistent with NUREG-1301.
1.119	RETS 4.0, Bases for Gaseous Radwaste Treatment System: "... achievable'. This specification implements ... part 50.36a ... These specifications apply ..."	REC 4.0, Bases for Gaseous Radwaste Treatment System: "... achievable.' This Control implements ... Part 50.36a ... This Control applies ..."	Editorial changes moving period within closing quotation mark, updating references to "specifications," and capitalizing "part."

TABLE OF PROPOSED CHANGES

ITEM #	CURRENT DOCUMENT SECTION/ WORDING	PROPOSED DOCUMENT SECTION/WORDING	JUSTIFICATION FOR CHANGE(S)
1.120	RETS 4.0, Bases for Total Dose: "This specification ... 10 CFR 20 by 46 FR 18525. The Specification ... from plant generated radioactive effluents and direct radiation ... the Special Report with ... 10 CFR Part 20.405c ... 10 CFR Part 20 ... Specifications 2.3.1 ... fuel cycle."	REC 4.0, Bases for Total Dose: "This Control ... 10 CFR Part 20.1301(d). The Control ... due to releases of radioactivity and to radiation from uranium fuel cycle sources ... submittal of the Special Report within 30 days with ... 10 CFR Part 20.2203(a)(4) ... 10 CFR Parts 20.1001 - 20.2402 ... Controls 2.3.1 ... fuel cycle. Demonstration of compliance with the limits of 40 CFR Part 190 or with the design objectives of Appendix I to 10 CFR Part 50 will be considered to demonstrate compliance with the 0.1 rem limit of 10 CFR Part 20.1301."	Editorial changes updating references to "specifications" and applicable sections of 10 CFR Part 20. Added time frame in which to submit special report. The 30 days is consistent with the time to submit various other special reports required and specified in other sections of the proposed ODCM. Other wording changes and additional paragraph are consistent with the draft Part 20 GL.
1.121	RETS 4.0, Bases for Radiological Environmental Monitoring Program: "The radiological environmental monitoring program ... these specifications provide ... or Appendix I ... radiological effluent monitoring program ..."	REC 4.0, Bases for Radiological Environmental Monitoring Program: "The Radiological Environmental Monitoring Program ... this Control provides ... of Appendix I ... Radiological Effluent Monitoring Program ..."	Editorial changes to capitalize program names, update reference to "specifications," and correct typographical error.

TABLE OF PROPOSED CHANGES

ITEM #	CURRENT DOCUMENT SECTION/ WORDING	PROPOSED DOCUMENT SECTION/WORDING	JUSTIFICATION FOR CHANGE(S)
1.122	RETS 4.0, Bases for Land Use Census: "These specification are ... radiological environmental monitoring program ..."	REC 4.0, Bases for Land Use Census: "This Control is ... Radiological Environmental Monitoring Program ..."	Editorial changes to capitalize program name and update reference to "specifications."
1.123	RETS 5.3.2.1, Semiannual Radioactive Effluent Release Report*: "Routine Radioactive ... Reports ... previous 6 months of operation shall be submitted within 60 days after January 1 and July 1 of each year. The period of the first report shall begin with the date of initial criticality.... * A single submittal may be made for a multiple unit station. The submittal should combine those sections that are common to all units at the station; however, for units with separate radwaste systems, the submittal shall specify the releases of radioactive material from each unit...."	REC 5.1, Annual Radioactive Effluent Release Report: "A Radioactive ... Report ... previous year shall be submitted prior to May 1 of each year. A single submittal may be made for a multiple unit station. The submittal should combine those sections that are common to all units at the station; however, for units with separate radwaste systems, the submittal shall specify the releases of radioactive material from each unit...."	Editorial change relocating text from * footnote at the bottom of page to the end of the first paragraph. Change to the frequency and due date of the Radioactive Effluent Release Report in accordance with 10 CFR 50.36a. The frequency of the report is also reflected in the new section title.

TABLE OF PROPOSED CHANGES

ITEM #	CURRENT DOCUMENT SECTION/ WORDING	PROPOSED DOCUMENT SECTION/WORDING	JUSTIFICATION FOR CHANGE(S)
1.124	RETS 5.3.2.1, Semiannual Radioactive Effluent Release Report: "... The Radioactive Effluent Release Reports shall include a summary of ... 1.21, 'Measuring Evaluating ... Plant,' ... thereof or as modified in the RETS.... The Radioactive Effluent Release Reports shall include the following information for each class of solid waste (as defined by 10 CFR Part 61) shipped offsite during the report period ... This information will be presented in tabular form similar to that or Table 3 of Reg. Guide 1.21...."	REC 5.1, Annual Radioactive Effluent Release Report: "... The Annual Radioactive Effluent Release Report shall include the following information: • A summary of ... 1.21, 'Measuring, Evaluating ... Plants,' ... thereof or as modified in the REC. • For solid wastes, the following information for each class of solid waste (as defined by 10 CFR Part 61) shipped offsite during the report period will be presented in tabular form similar to that of Table 3 of Reg. Guide 1.21 ..."	Editorial changes including correcting title of Regulatory Guide 1.21, reformatting narrative text to use bulleted paragraphs, referencing REC rather than RETS, and some rewording but with no change in context.

TABLE OF PROPOSED CHANGES

ITEM #	CURRENT DOCUMENT SECTION/ WORDING	PROPOSED DOCUMENT SECTION/WORDING	JUSTIFICATION FOR CHANGE(S)
1.125	RETS 5.3.2.1, Semiannual Radioactive Effluent Release Report: "... The Radioactive Effluent Release Report to be submitted within 60 days after January 1 of each year shall include an annual summary ... stability.** ... ** In lieu of submission with the first half year Radioactive Effluent Release Report, the licensee has the option of retaining this summary of required meteorological data on site in a file that shall be provided to the NRC."	REC 5.1, Annual Radioactive Effluent Release Report: "... • An annual summary ... stability. In lieu of submission with the Radioactive Effluent Release Report, the licensee has the option of retaining this summary of required meteorological data on site in a file that shall be provided to the NRC upon request."	Editorial changes reformatting narrative text to use bulleted paragraphs, and rewording but with no change in context.

TABLE OF PROPOSED CHANGES

ITEM #	CURRENT DOCUMENT SECTION/ WORDING	PROPOSED DOCUMENT SECTION/WORDING	JUSTIFICATION FOR CHANGE(S)
1.126	RETS 5.3.2.1, Semiannual Radioactive Effluent Release Report: "... This same report shall include an assessment of the radiation doses ... calendar year. This same report shall also include an assessment of the radiation doses ... in these reports. The meteorological conditions concurrent with the time of release of radioactive materials in gaseous effluents, as determined by sampling frequency and measurement, shall be used for determining the gaseous pathway doses. (For ORs: approximate and conservative approximate methods are acceptable.) The assessment of radiation doses shall be performed in accordance with the methodology and parameters in the OFFSITE DOSE CALCULATION MANUAL (ODCM)...."	REC 5.1, Annual Radioactive Effluent Release Report: "... • An assessment of the radiation doses ... calendar year. • An assessment of the radiation doses ... in the report. Approximate and conservative approximate methods for determining the meteorological conditions shall be used for determining gaseous pathway doses. The assessment of radiation doses shall be performed in accordance with the methodology and parameters in the OFFSITE DOSE CALCULATION MANUAL (ODCM)...."	Editorial format changes and clarification of current requirements. The current Technical Specifications allow the use of "approximate and conservative approximate methods" (i.e., the use of annual average meteorological data rather than real time data).

TABLE OF PROPOSED CHANGES

ITEM #	CURRENT DOCUMENT SECTION/ WORDING	PROPOSED DOCUMENT SECTION/WORDING	JUSTIFICATION FOR CHANGE(S)
1.127	RETS 5.3.2.1, Semiannual Radioactive Effluent Release Report: "... The Radioactive Effluent Release Report to be submitted 60 days after January 1 of each year shall also include an assessment ... 3.6 including ... Part 190, Environmental ... Operation...."	REC 5.1, Annual Radioactive Effluent Release Report: "... • An assessment ... 3.6, including ... Part 190, 'Environmental ... Operation.' ..."	Editorial format and punctuation changes.
1.128	RETS 5.3.2.1, Semiannual Radioactive Effluent Release Report: "... The Radioactive Effluent Release Reports shall include a list and description ... reporting period...."	REC 5.1, Annual Radioactive Effluent Release Report: "... • A list and description ... reporting period...."	Editorial format change.
1.129	Not Applicable	REC 5.1, Annual Radioactive Effluent Release Report: "... • Pursuant to Controls 2.1 and 2.2 ... time specified. • Pursuant to Controls 2.1 and 2.2 ... Controls. • Pursuant to Control 2.7 ... new locations. • Pursuant to Table 3.3.1-1 ... 3.4.1-1.	Additional reporting requirements incorporated in this overall section from other ODCM sections.

TABLE OF PROPOSED CHANGES

ITEM #	CURRENT DOCUMENT SECTION/ WORDING	PROPOSED DOCUMENT SECTION/WORDING	JUSTIFICATION FOR CHANGE(S)
1.130	RETS 5.3.2.1, Semiannual Radioactive Effluent Release Report: "... The Radioactive Effluent Release Reports shall include any changes made during the reporting period to the PROCESS CONTROL PROGRAM (PCP) and to the OFFSITE DOSE CALCULATION MANUAL (ODCM) as well as a listing of new locations for dose calculations and/or environmental monitoring identified by the land use census pursuant to Specification 2.8."	REC 5.1, Annual Radioactive Effluent Release Report: "... • Pursuant to Control 2.8, a listing of new location(s) for dose calculations and/or environmental monitoring identified by the land use census. Include revised figure(s) and table for the ODCM reflecting the new location(s).... • Pursuant to Appendix B Technical Specifications 4.5.2 and 4.6.2, any changes made during the reporting period to the PROCESS CONTROL PROGRAM (PCP) and to the OFFSITE DOSE CALCULATION MANUAL (ODCM), respectively."	Editorial format changes and rewording.
1.131	Not Applicable	REC 5.1, Annual Radioactive Effluent Release Report: "... • Pursuant to Appendix B Technical Specifications 1.2.1 and 1.3.2 ... Control limits. • Pursuant to Appendix B Technical Specification 4.3.3 ... treatment systems...."	Additional reporting requirements incorporated in this overall section from other ODCM sections.

TABLE OF PROPOSED CHANGES

ITEM #	CURRENT DOCUMENT SECTION/ WORDING	PROPOSED DOCUMENT SECTION/WORDING	JUSTIFICATION FOR CHANGE(S)
1.132	5.3.2.2, Annual Radiological Environmental Operating Report*: "Routine Radiological ... Reports covering ... * A single submittal may be made for a multiple unit station...."	REC 5.2, Annual Radiological Environmental Operating Report: "An annual Radiological .... Report covering ... A single submittal may be made for a multiple unit station...."	Editorial changes. Relocated text in footnote * to the end of the first paragraph.
1.133	5.3.2.2, Annual Radiological Environmental Operating Report: "... The Annual Radiological ... Reports shall include summaries ... results of the radiological environmental surveillance activities ..."	REC 5.2, Annual Radiological Environmental Operating Report: "... The Annual Radiological ... Report shall include: • Summaries ... results of the Radiological Environmental Monitoring Program ..."	Editorial format changes. Change to reference "Radiological Environmental Monitoring Program" consistent with GL 89-01.
1.134	5.3.2.2, Annual Radiological Environmental Operating Report: "... The reports shall also include the results of land use censuses required by Specification 2.8...."	REC 5.2, Annual Radiological Environmental Operating Report: "... • Pursuant to Control 3.8, the results of the land use census...."	Editorial format and reference changes.

TABLE OF PROPOSED CHANGES

ITEM #	CURRENT DOCUMENT SECTION/ WORDING	PROPOSED DOCUMENT SECTION/WORDING	JUSTIFICATION FOR CHANGE(S)
1.135	5.3.2.2, Annual Radiological Environmental Operating Report: "... The Annual Radiological Environmental Operating Report shall include the results ... specified in the Table and Figures in the ODCM ... "	REC 5.2, Annual Radiological Environmental Operating Report: "... • The results ... specified in the table and figures in the ODCM ... "	Editorial changes in format and capitalization of text.

TABLE OF PROPOSED CHANGES

ITEM #	CURRENT DOCUMENT SECTION/ WORDING	PROPOSED DOCUMENT SECTION/WORDING	JUSTIFICATION FOR CHANGE(S)
1.136	5.3.2.2, Annual Radiological Environmental Operating Report: "... The reports shall also include the following: a summary description of the radiological environmental monitoring program; at least two legible maps** covering all sampling locations keyed to a table giving distances and directions from the centerline of one reactor; the results of licensee participation in the Interlaboratory Comparison Program, required by Specification 2.9; discussion of all deviations from the sampling schedule of Table 2.7-1; and discussion of all analyses in which the LLD required by Table 3.7-1 was not achievable. ** One map shall cover stations near the site boundary; a second shall include the more distant stations."	REC 5.2, Annual Radiological Environmental Operating Report: "... • A summary description of the Radiological Environmental Monitoring Program. • At least two legible maps covering all sampling locations keyed to a table giving distances and directions from the centerline of one reactor. One map shall cover stations near the site boundary and the second shall include the more distant stations.... • Pursuant to Table 2.7-1, Notation (a), a discussion of all deviations from the sampling schedule of Table 2.7-1. • Pursuant to Table 3.7-1, Notation (c), a discussion of all analyses and a discussion of the contributing factors for cases in which the LLD required by Table 3.7-1 was not achievable.... • Pursuant to Control 3.9, the results of licensee participation in the Interlaboratory Comparison Program."	Editorial changes including bullet format and capitalization of program name. An additional requirement is being included in this list which was already required by Table 3.7-1.

TABLE OF PROPOSED CHANGES

ITEM #	CURRENT DOCUMENT SECTION/ WORDING	PROPOSED DOCUMENT SECTION/WORDING	JUSTIFICATION FOR CHANGE(S)
1.137	Not Applicable	REC 5.2, Annual Radiological Environmental Operating Report: "... • A discussion of the reasons for not conducting the Radiological Environmental Monitoring Program as specified by Control 2.7 and the plans for preventing recurrence. • Pursuant to Control 2.7, a discussion of environmental sample measurements that exceed the reporting levels of Table 2.7-2 but are not the result of plant effluents.... • Pursuant to Table 3.7-1, Notation (a), a discussion of identifiable nuclide peaks, including those of nuclides specified in Table 3.7-1.... • Pursuant to Control 2.9, the corrective actions taken to prevent a recurrence if the Interlaboratory Comparison Program is not being performed as required...."	Additional reporting requirements incorporated in this overall section from other ODCM sections.

TABLE OF PROPOSED CHANGES

ITEM #	CURRENT DOCUMENT SECTION/ WORDING	PROPOSED DOCUMENT SECTION/WORDING	JUSTIFICATION FOR CHANGE(S)
1.138	Not Applicable	REC 5.3, Special Reports: "In lieu of a Licensee Event Report (LER), the following special reports must be generated within 30 days:..."	A new section is being added to list special reporting requirements. These reports are required by various sections of the ODCM.
1.139	ODCM 1.2...according to Specifications 2.1 and 2.2.	ODCM 1.2 ...according to Radiological Effluent Controls 2.1 and 2.2	Editorial change to update reference.
1.140	ODCM 1.2.1 ...** These limits are not part of Technical Specification 2.4.1, but are included for information, as these limits are used for operational control of releases. *** From Technical Specification, 2.4.1	ODCM 1.2.1 ...** These limits are not part of Radiological Effluent Control 2.4.1, but are included for information, as these limits are used for operational control of releases. *** From Radiological Effluent Control 2.4.1	Editorial change to update reference.
1.141	ODCM 1.2.2.1 ...to the levels listed in 10 CFR 20 Appendix B, Table II, Column 2.	ODCM 1.2.2.1 ...to the levels listed in 10 CFR 20 Appendix B, Table 2, Column 2.	Editorial change to update reference to current 10 CFR 20.
1.142	ODCM 2.1.1... in Section 3.3.1 of the Technical Specifications	ODCM 2.1.1 ...in Section 3.3.1 of the Radiological Effluent Controls (RECS)...	Editorial change to update reference.
1.143	ODCM 2.1.7 ...exceed Section 2.3 requirement of the RETS...	ODCM 2.1.7 ...exceed Section 2.3 requirement of the RECS...	Editorial change to update reference.
1.144	ODCM 2.1.9 ...at the frequencies specified in Table 3.3-1B of the RETS.	ODCM 2.1.9 ...at the frequencies specified in Table 3.3.1-1 of the RECS.	Editorial change to update reference.

TABLE OF PROPOSED CHANGES

ITEM #	CURRENT DOCUMENT SECTION/ WORDING	PROPOSED DOCUMENT SECTION/WORDING	JUSTIFICATION FOR CHANGE(S)
1.145	ODCM 2.1.11 ...excluding tritium and noble gas, as per section 2.3.4 of the Technical Specifications.	ODCM 2.1.11 ...excluding tritium and noble gas, as per section 1.2.1, Appendix B of the Technical Specifications.	Editorial change to update reference.
1.146	ODCM 2.1.13 ...The service water radioactivity monitor listed in Table 2.1-1 of the RETS is... ...the removal of that monitor from service is not specifically addressed in the Radiological Environmental Technical Specification,	ODCM 2.1.13 ...The service water radioactivity monitor listed in Table 2.1-1 of the RECS is... ...the removal of that monitor from service is not specifically addressed in the Radiological Environmental Controls,	Editorial changes to update references.
1.147	ODCM 2.1.14 - Liquid effluent concentrations are limited to 10CFR20 limits, as calculated under 10CFR20.106a, which permits averaging of effluent concentrationover one year. This method is appropriate for batch liquid waste tanks since doses from this liquid pathway are the result of total curies released and are not greatly influenced by instantaneous concentrations.	ODCM 2.1.14 - Liquid effluent concentrations are limited to 10CFR20 limits.	Change to update reference to current Part 20. Consistent with current Part 20.
1.148	ODCM 2.1.18 ...releases from this system will be in accordance with the requirements for batch waste release tanks listed in the RETS.	ODCM 2.1.18 ...releases from this system will be in accordance with the requirements for batch waste release tanks listed in the RECS.	Editorial change to update reference.

TABLE OF PROPOSED CHANGES

ITEM #	CURRENT DOCUMENT SECTION/ WORDING	PROPOSED DOCUMENT SECTION/WORDING	JUSTIFICATION FOR CHANGE(S)
1.149	ODCM 2.2.1 - This section provides a description of the means that will be used to demonstrate compliance with Technical Specification 2.3.1.	ODCM 2.2.1 -This section provides a description of the means that will be used to demonstrate compliance with Radiological Effluent Control 2.3.1.	Editorial change to update reference.
1.150	ODCM 2.2.6 - This section describes the methodology used to ensure the requirements of section 2.3.1 of the RETS are satisfied. The total discharge canal concentration of radionuclides must be maintained less than the effective maximum permissible concentration for the radionuclide mixture, when averaged per 10CFR20.106a. The noble gases will be included using the limit 2E-4 uCi/ml as specified in section 2.3.1 of the RETS.	ODCM 2.2.6 - This section describes the methodology used to ensure the requirements of section 2.3.1 of the RECS are satisfied. The total discharge canal concentration of radionuclides must be maintained less than the effective maximum permissible concentration for the radionuclide mixture, as per 10CFR20. The noble gases will be included using the limit 2E-4 uCi/ml as specified in section 2.3.1 of the RECS.	Editorial change to update reference. Change to update reference to current Part 20. Consistent with current Part 20.
1.151	ODCM 2.3.1 - Section 2.3.2 of the Technical Specification.... ....existing perimeter and environmental TLDs per Tech. Spec. 2.6.B.	ODCM 2.3.1 - Section 2.3.2 of the Radiological Effluent Controls.... ....existing perimeter and environmental TLDs per RECS 2.6.A.	Editorial change to update reference.
1.152	ODCM 2.3.2 - Section 2.3.3 of the Technical Specifications requires...	ODCM 2.3.2 - Section 2.3.3 of the Radiological Effluent Controls requires	Editorial change to update reference.

TABLE OF PROPOSED CHANGES

ITEM #	CURRENT DOCUMENT SECTION/ WORDING	PROPOSED DOCUMENT SECTION/WORDING	JUSTIFICATION FOR CHANGE(S)
1.153	ODCM 2.3.3 - Section 2.3.1 of Technical Specifications require that the concentration of radioactive material released from the site shall be limited to the concentrations specified in 10 CFR Part 20, Appendix B, Table II, Column 2 for radionuclides other than dissolved or entrained noble gases (when averaged per 10CFR20.106a).	ODCM 2.3.3 - Section 2.3.1 of Radiological Effluent Controls require that the concentration of radioactive material released from the site shall be limited to 10 times the concentration values specified in 10 CFR Part 20, Appendix B, Table 2 Column 2 for radionuclides other than dissolved or entrained noble gases.	Editorial changes to update references. Change to update reference to current Part 20. Consistent with current Part 20 and Draft Part 20 Generic Letter.
1.154	ODCM 2.4.2 - (page 2-10) ...as contained in the Technical Specifications. ...in Technical Specifications from all liquid radioactive waste management systems.	ODCM 2.4.2 - (page 2-10) ...as contained in the Radiological Effluent Controls. ...in the Radiological Effluent Controls from all liquid radioactive waste management systems.	Editorial changes to update references.
1.155	ODCM 3.1.1 ...are contained in the Technical Specifications.	ODCM 3.1.1 ...are contained in the Radiological Effluent Controls.	Editorial changes to update references.
1.156	ODCM 3.1.4 ...and the monthly grab sample described in Technical Specifications Table 3.4.1-1...	ODCM 3.1.4 ...and the monthly grab sample described in Radiological Effluent Controls Table 3.4.1-1...	Editorial changes to update references.
1.157	ODCM 3.1.8 ...may be used if the Plant Manager...	ODCM 3.1.8 ...may be used if the Site Executive Officer...	Editorial change to update to current title.

TABLE OF PROPOSED CHANGES

ITEM #	CURRENT DOCUMENT SECTION/ WORDING	PROPOSED DOCUMENT SECTION/WORDING	JUSTIFICATION FOR CHANGE(S)
1.158	ODCM 3.1.13 ...The process flow rate monitor surveillance requirements specified in RETS Table 3.2-1	ODCM 3.1.13 ...The process flow rate monitor surveillance requirements specified in RECS Table 3.2-1	Editorial changes to update references.
1.159	ODCM 4.0 - The locations listed in Table 4.1 are the RETS designated locations only.	ODCM 4.0 - The locations listed in Table 4.1 are the RECS designated locations only.	Editorial changes to update references.
1.160	ODCM Table 4.1, Note 1 - ...as long as the required RETS LLD is met	ODCM Table 4.1, Note 1 - ...as long as the required RECS LLD is met	Editorial changes to update references.
1.161	ODCM, Appendix B, Note ...in accordance with Technical Specifications.	ODCM, Appendix B, Note ...in accordance with Radiological Effluent Controls.	Editorial changes to update references.
1.162	Not Applicable	REC 1.8, Definition MAXIMUM PERMISSIBLE CONCENTRATION WATER (MPCW) MPCW is that concentration of a radionuclide equal to 10 times the concentration of a radionuclide specified in 10 CFR 20, Appendix B, Table 2, Column 2.	Changes consistent with the draft Part 20 GL and the Authority's position regarding level of effluent control as stated in Reference 6.

TABLE OF PROPOSED CHANGES

ITEM #	CURRENT DOCUMENT SECTION/ WORDING	PROPOSED DOCUMENT SECTION/WORDING	JUSTIFICATION FOR CHANGE(S)

Table 2: Changes to PCP

2.001	RETS 1.8, Definition SOLIDIFICATION	PCP 5.1.20, Add the definition of SOLIDIFICATION: "Solidification shall be the conversion of wet wastes into a form that meets shipping and burial ground requirements."	This definition is being relocated from Appendix B to the PCP. No wording changes are proposed.
2.002	RETS 2.5, Solid Radioactive Waste, section 2.5.A "To ensure the safe operation... A. Ensure that the solid..."	PCP 1.0 Purpose, Add: "To ensure the safe operation of the solid radwaste system, the solid radwaste will be used in accordance with this Process Control Program to process wet radioactive wastes to meet shipping and burial ground requirements."	This is being relocated from Appendix B to the PCP. Editorial change to combine objective and specification 2.5.A.
2.003	RETS 2.5, Solid Radioactive Waste	PCP 4.0 g, Add: "Suspend shipments of defectively processed or defectively packaged solid radioactive wastes from the site when the provisions of this process control program are not satisfied."	This is being relocated from Appendix B to the PCP. Additional responsibility to coincide with relocation of Technical Specification 2.5.B to the PCP.
2.004	RETS 2.5, Solid Radioactive Waste, section 2.5.B	PCP 7.2 c, Add: "With the provisions of this process control program not satisfied, suspend shipments of defectively processed or defectively packaged solid radioactive wastes from the site."	This is being relocated from Appendix B to the PCP. No wording changes are proposed.

TABLE OF PROPOSED CHANGES

ITEM #	CURRENT DOCUMENT SECTION/ WORDING	PROPOSED DOCUMENT SECTION/WORDING	JUSTIFICATION FOR CHANGE(S)
2.005	RETS 3.5, Solid Radioactive Waste Surveillance Requirements "The PROCESS CONTROL PROGRAM shall be used to verify the SOLIDIFICATION of at least... (e.g., filter sludges, spent resins, evaporator bottoms, boric acid solutions, and sodium sulfate solutions). A. ... determined in accordance with the PROCESS CONTROL PROGRAM, and a subsequent test verifies SOLIDIFICATION. SOLIDIFICATION parameters determined by the PROCESS CONTROL PROGRAM. B. ... the PROCESS CONTROL PROGRAM shall provide for the collection ... The PROCESS CONTROL PROGRAM shall be modified as required, as provided in Specification 5.3, to assure SOLIDIFICATION of subsequent batches of waste.	PCP 9.1.1 c, Practices, Add to the solidification section: "If solidification is required in the future, then at least one representative test specimen from at least every tenth batch of each type of wet radioactive waste will be checked to verify solidification. If any test specimen fails to verify solidification, the solidification of the batch under test shall be suspended until such time as additional test specimens can be obtained, alternative solidification parameters can be determined, and a subsequent test verifies solidification. If the initial test specimen from a batch of waste fails to verify solidification, then provide for the collection and testing of representative test specimens from each consecutive batch of the same type of wet waste until at least 3 consecutive initial test specimens demonstrates solidification. The process shall be modified as required to assure solidification of subsequent batches of waste.	This change is being relocated from Appendix B with editorial changes to eliminate unnecessary wording.

TABLE OF PROPOSED CHANGES

ITEM #	CURRENT DOCUMENT SECTION/ WORDING	PROPOSED DOCUMENT SECTION/WORDING	JUSTIFICATION FOR CHANGE(S)
2.006	Not Applicable	9.8 Reporting 9.8.1 Releases In accordance with Technical Specification Appendix B 4.3.2.1 and the REC section 5.1, ensure that the Annual Radioactive Effluent Release Report includes a summary of the quantities of solid radioactive waste released from the unit. 9.8.2 Major Changes to the Process Control Program Licensee initiated major changes to the radioactive waste systems shall be reported to the Commission in the Annual Radioactive Effluent Release Report for the year in which the change evaluation was reviewed by the PORC. The discussion of each change shall contain those items noted in the REC section 5.1.	PCP 9.8, Reporting, Add a section on reporting requirements: This will ensure consistency between the reporting requirements in T.S. 4.3.2.1 and REC 5.1.

TABLE OF PROPOSED CHANGES

ITEM #	CURRENT DOCUMENT SECTION/ WORDING	PROPOSED DOCUMENT SECTION/WORDING	JUSTIFICATION FOR CHANGE(S)

Table 3: Changes to Appendix A

3.001	Not Applicable	Appendix A 1.19, Definition EFFLUENT CONCENTRATION: "The EFFLUENT CONCENTRATION is that concentration of a radionuclide specified in 10 CFR 20, Table 2 of Appendix B to Sections 1001 - 2402."	Definition of a new term being added to both Appendix A and the ODCM REC as a result of the provisions of 10 CFR 20.1001 - 20.2402.
3.002	RETS 1.3, Definition MEMBER(S) OF THE PUBLIC: "MEMBER(S) OF THE PUBLIC shall include all persons who are not occupationally associated with the plant. This category does not include employees of either utility, their contractors or vendors. Also excluded from this category are persons who enter the site to service equipment or to make deliveries. This category does include persons who use portions of the site for recreational, occupational or other purposes not associated with the plant."	Appendix A 1.20, Definition MEMBER(S) OF THE PUBLIC: "MEMBER(S) OF THE PUBLIC means any individual except when that individual is receiving an occupational dose."	This definition is being updated and relocated from Appendix B to both Appendix A and the ODCM REC. The changes are consistent with the draft Part 20 GL and 10 CFR 20.1003. Definitions for terms used in Appendix A and/or Appendix B will be contained in the Appendix A Definition Section.

TABLE OF PROPOSED CHANGES

ITEM #	CURRENT DOCUMENT SECTION/ WORDING	PROPOSED DOCUMENT SECTION/WORDING	JUSTIFICATION FOR CHANGE(S)
3.003	Not Applicable	Appendix A 1.21, Definition OCCUPATIONAL DOSE: OCCUPATIONAL DOSE means the dose received by an individual in the course of employment in which the individual's assigned duties involve exposure to radiation or to radioactive material from licensed and unlicensed sources of radiation, whether in the possession of the licensee or other person. OCCUPATIONAL DOSE does not include dose received from background radiation, from any medical administration the individual has received, from exposure administered to individuals administered radioactive material and released in accordance with 35.75, from voluntary participation in medical research programs, or as a MEMBER OF THE PUBLIC.	Added definition to define term used in definition of MEMBER OF THE PUBLIC. This change is consistent with 10 CFR 20.1003.

TABLE OF PROPOSED CHANGES

ITEM #	CURRENT DOCUMENT SECTION/ WORDING	PROPOSED DOCUMENT SECTION/WORDING	JUSTIFICATION FOR CHANGE(S)
3.004	RETS 1.4, Definition OFFSITE DOSE CALCULATION MANUAL (ODCM): "... doses due to radioactive ... environmental radiological monitoring program."	Appendix A 1.22, Definition OFFSITE DOSE CALCULATION MANUAL: "... doses resulting from radioactive ... Radiological Environmental Monitoring Program. The ODCM shall also contain (1) the Radioactive Effluent Controls and Radiological Environmental Monitoring Programs required by Appendix A Technical Specification 6.8.4 and (2) descriptions of the information that should be included in the Annual Radiological Environmental Operating and Radioactive Effluent Release Reports required by Appendix B Technical Specifications 4.3.2.1 and 4.3.2.2."	This definition is being updated and relocated from Appendix B to both Appendix A and the ODCM REC. The changes are consistent with GL 89-01. Definitions for terms used in Appendix A and/or Appendix B will be contained in the Appendix A Definition Section.

TABLE OF PROPOSED CHANGES

ITEM #	CURRENT DOCUMENT SECTION/ WORDING	PROPOSED DOCUMENT SECTION/WORDING	JUSTIFICATION FOR CHANGE(S)
3.005	RETS 1.5, Definition PROCESS CONTROL PROGRAM (PCP): "... formula ... 10 CFR Part 20, 10 CFR Part 71 and ... of the radioactive waste."	Appendix A 1.23, Definition PROCESS CONTROL PROGRAM: "... formulas ... 10 CFR Parts 20, 61 and 71, and ... of solid radioactive waste."	This definition is being updated and relocated from Appendix B to both Appendix A and the ODCM REC. The changes are consistent with GL 89-01. Definitions for terms used in Appendix A and/or Appendix B will be contained in the Appendix A Definition Section.
3.006	RETS 1.7, Definition SITE BOUNDARY: "... (see Figure 5.8-1) shall be that line beyond which the land is neither owned, nor leased, nor otherwise controlled by either site licensee."	Appendix A 1.24, Definition SITE BOUNDARY: "... (see Figure 1-1) means that line beyond which the land or property is not owned, leased, or otherwise controlled by either site licensee."	Editorial changes adding "property" and referencing new figure number. Definition is consistent with the draft Part 20 GL and 10 CFR 20.1003. Definition being relocated from Appendix B to both Appendix A and the ODCM REC. Definitions for terms used in Appendix A and/or Appendix B will be contained in the Appendix A Definition Section.

TABLE OF PROPOSED CHANGES

ITEM #	CURRENT DOCUMENT SECTION/ WORDING	PROPOSED DOCUMENT SECTION/WORDING	JUSTIFICATION FOR CHANGE(S)
3.007	RETS 1.10, Definition UNRESTRICTED AREA: "... (see Figure 5.8-1) ... purposes. The UNRESTRICTED AREA boundary may coincide with the exclusion (fenced) area boundary, as defined in 10 CFR 100.3(a), but the UNRESTRICTED AREA does not include areas over water bodies. The concept of UNRESTRICTED AREAS, established at or beyond the SITE BOUNDARY, is utilized in the LIMITING CONDITIONS FOR OPERATION to keep levels of radioactive materials in liquid and gaseous effluents as low as is reasonably achievable, pursuant to 10 CFR 50.36a.	Appendix A 1.25, Definition UNRESTRICTED AREA: "... (see Figure 1-1) ... purposes."	This definition is being updated and relocated from Appendix B to both Appendix A and the ODCM REC. The changes are consistent with the draft Part 20 GL. Definitions for terms used in Appendix A and/or Appendix B will be contained in the Appendix A Definition Section.
3.008	Appendix A 6.8, Title: "Procedures"	Appendix A 6.8, Title: "Procedures and Programs"	Editorial change reflecting addition of program requirements to the section.

TABLE OF PROPOSED CHANGES

ITEM #	CURRENT DOCUMENT SECTION/ WORDING	PROPOSED DOCUMENT SECTION/WORDING	JUSTIFICATION FOR CHANGE(S)
3.009	Not Applicable	Appendix A 6.8.1.k: "k. Radioactive Effluent Control Program implementation."	The addition of REC Program implementation procedures to the list of required procedures is consistent with the addition of the REC Program (proposed Appendix A Technical Specification 6.8.4.a).
3.010	Not Applicable	Appendix A 6.8.1.l: "l. Radiological Environmental Monitoring Program implementation."	The addition of REM Program implementation procedures to the list of required procedures is consistent with the addition of the REM Program (proposed Appendix A Technical Specification 6.8.4.b).
3.011	GL 89-01, Model Technical Specifications 6.8.4.g and h	Appendix A 6.8.4.a and b	The addition of procedural controls for the REC and REM Programs to Appendix A is consistent with the guidance of GL 89-01, with exceptions noted below.
3.012	GL 89-01, Model Technical Specification 6.8.4.g: "... (2) shall be implemented by operating procedures, and (3) shall include remedial actions to be taken whenever the program limits are exceeded. The program shall include the following elements ..."	Appendix A 6.8.4.a: "... and (2) shall be implemented by site procedures, and (3) shall include remedial actions to be taken whenever the program limits are exceeded. The program shall include the following elements ..."	Editorial change. The REC Program will be implemented by site procedures, not just operating procedures.

TABLE OF PROPOSED CHANGES

ITEM #	CURRENT DOCUMENT SECTION/ WORDING	PROPOSED DOCUMENT SECTION/WORDING	JUSTIFICATION FOR CHANGE(S)
3.013	GL 89-01, Model Technical Specification 6.8.4.g.7 "... to areas beyond the SITE BOUNDARY conforming to the doses associated with 10 CFR Part 20, Appendix B, Table II, Column 1,"	Appendix A 6.8.4.a.7: "... from the site to areas at or beyond the SITE BOUNDARY shall be limited to the following: a. For noble gases: Less than or equal to a dose rate of 500 mrems/yr to the total body and less than or equal to a dose rate of 3000 mrems/yr to the skin, and b. For iodine-131, tritium, and for all radionuclides in particulate form with half-lives greater than 8 days: Less than or equal to dose rate of 1500 mrems/yr to any organ."	Change consistent with the draft Part 20 GL and more detailed than required by GL 89-01.
3.014	GL 89-01 Model Technical Specification 6.8.4.g.9: "... from Iodine-131, Iodine-133, tritium ..."	Appendix A 6.8.4.a.9: "... from iodine-131, tritium ..."	The exclusion of Iodine-133 is consistent with current IP3 RETS.
3.015	GL 89-01 Model Technical Specification 6.8.4.g.10: "Limitations on venting and purging of the Mark II containment through the Standby Gas Treatment System to maintain releases as low as reasonable achievable (BWRs w/Mark II containments), and ..."	Not applicable	This specification is not applicable to IP3, a PWR, and, therefore, is not being included.

TABLE OF PROPOSED CHANGES

ITEM #	CURRENT DOCUMENT SECTION/ WORDING	PROPOSED DOCUMENT SECTION/WORDING	JUSTIFICATION FOR CHANGE(S)
3.016	Not Applicable	Appendix A 6.8.4.c: "Process Control Program A program shall be provided to ensure that the processing and packaging of solid radioactive wastes shall be accomplished in compliance with 10 CFR Parts 20, 61 and 71, and Federal and State regulations and other requirements governing the disposal of solid radioactive waste. The program requirements shall be contained in the PCP manual."	The addition of this Technical Specification is consistent with the additions of proposed Technical Specifications 6.8.4.a and 6.8.4.b.
3.017	Appendix A 6.9.1.3, Annual Radiation Exposure Reports: "... (including contractors) receiving ... man rem ... 1/ ... 20.407 ..."	Appendix A 6.9.1.3, Annual Radiation Exposure Reports: "... (including contractors), for whom monitoring was required, ... man-rem ... 1/ ... 20.2206 ..."	Changes consistent with the draft Part 20 GL.
3.018	Appendix A 6.9.2.g: "... limits (Appendix B Specifications 2.3, 2.4, 2.5, 2.6)"	Appendix A 6.9.2.g: "... limits (Technical Specification 6.8.4.a) "	Editorial change referencing new applicable Technical Specification section.
3.019	Appendix A 6.9.2.i: "... levels (Appendix B Specification 2.7, 2.8, 2.9)"	Appendix A 6.9.2.i: "... levels (Technical Specification 6.8.4.b)"	Editorial change referencing new applicable Technical Specification section.

TABLE OF PROPOSED CHANGES

ITEM #	CURRENT DOCUMENT SECTION/ WORDING	PROPOSED DOCUMENT SECTION/WORDING	JUSTIFICATION FOR CHANGE(S)
3.020	Not Applicable	Appendix A 6.9.2.l: "l. Inoperable explosive gas monitoring instrumentation (Appendix B Technical Specification 1.1.1)"	Additional requirement for special report pursuant to proposed Technical Specification Appendix B 1.1.1.
3.021	GL 89-01 Model Technical Specification 6.10.3.o: "o. Records of reviews performed for changes made to the OFFSITE DOSE CALCULATION MANUAL and the PROCESS CONTROL PROGRAM."	Appendix A 6.10.2.p: "p. Records of reviews performed for changes made to the OFFSITE DOSE CALCULATION MANUAL and the PROCESS CONTROL PROGRAM."	Additional requirement consistent with GL 89-01.
3.022	Appendix A 6.11, Radiation and Respiratory Protection Program: "... 20.103, allowance shall be made ... Appendix B, Table I, Column 3 of 10 CFR 20."	Appendix A 6.11, Radiation and Respiratory Protection Program: "... 20.1703, allowance may be made ... Appendix B, Table 1, Column 3 of 10 CFR 20."	Editorial changes updating references to Part 20 sections. Change from "shall" to "may" reflects the actual wording of the regulation, 10 CFR 20.1703(b), which allows the licensee to make an allowance for respiratory protection equipment if stipulations of the regulation are met.
3.023	Appendix A 6.12, High Radiation Area, 6.12.1: "... 20.203 of 10 CFR 20 ... is 1000 mrem/hr or less and 100 mrem/hr or greater ... Radiation Work Permit*."	Appendix A 6.12, High Radiation Area: "... 20.1601 of 10 CFR 20 ... is greater than 100 mrem/hr but less than 1000 mrem/hr ... Radiation Work Permit (RWP)*."	Editorial changes updating references to Part 20 sections, rewording sentence to reference lower limit prior to upper limit, and adding abbreviation.

TABLE OF PROPOSED CHANGES

ITEM #	CURRENT DOCUMENT SECTION/ WORDING	PROPOSED DOCUMENT SECTION/WORDING	JUSTIFICATION FOR CHANGE(S)
3.024	Appendix A 6.12.2, "The requirements of 6.12.1 above, shall also apply to each high radiation area in which the intensity of radiation is greater than 1000 mrem/hr. In addition, locked doors shall be provided to prevent unauthorized entry into such areas ...	Appendix A 6.12.2*, "In addition to the requirements of 6.12.1 above, areas accessible to individuals with radiation levels such that an individual could receive in 1 hour a dose greater than 1000 mrem** but less than 500 rads***, shall be provided with locked doors to prevent unauthorized entry ... * Health Physics Personnel shall be exempt from the RWP issuance requirements for entries into high radiation areas during the performances of their assigned radiation protection duties, provided they comply with approved radiation protection procedures for entry into high radiation areas. ** Measured at 30 centimeters (12 inches) from the source of radioactivity. *** Measured at 1 meter from the source of radioactivity."	Changes consistent with current Technical Specification requirements for high radiation areas and with some provisions of the draft Part 20 GL. The added footnotes are consistent with the draft Part 20 GL.

TABLE OF PROPOSED CHANGES

ITEM #	CURRENT DOCUMENT SECTION/ WORDING	PROPOSED DOCUMENT SECTION/WORDING	JUSTIFICATION FOR CHANGE(S)

Table 4: Changes to Appendix B

4.001	RETS 2.2, Radioactive Gaseous Effluent Monitoring Instrumentation, Specification: "The radioactive gaseous effluent ... Table 2.2-1 ... of Specification 2.4.1 ... The alarm/trip setpoints of these channels shall be determined and adjusted in accordance with the methodology and parameters in the ODCM...."	Appendix B 1/2.1, Monitoring Instrumentation, 1.1.1 Explosive Gas Monitoring Instrumentation, LCO: "The explosive gas ... Table 1.1.1-1 ... of Appendix B Technical Specification 1.3.1...."	Controls for gaseous effluent monitoring instrumentation are being relocated to the ODCM. Specifications for explosive gas monitoring instrumentation will remain in Appendix B. The proposed explosive gas Technical Specifications are consistent with GL 89-01. Editorial changes reflecting new section numbers.
4.002	RETS 2.2, Applicability: "Applies to the operating status of the radioactive gaseous effluent monitoring instrumentation as shown in Table 2.2-1."	Appendix B 1.1.1, Applicability: "As shown in Table 1.1.1-1."	Controls for gaseous effluent monitoring instrumentation are being relocated to the ODCM. Specifications for explosive gas monitoring instrumentation will remain in Appendix B. The proposed explosive gas Technical Specifications are consistent with GL 89-01. Editorial changes eliminating unnecessary wording and reflecting new section numbers.

TABLE OF PROPOSED CHANGES

ITEM #	CURRENT DOCUMENT SECTION/ WORDING	PROPOSED DOCUMENT SECTION/WORDING	JUSTIFICATION FOR CHANGE(S)
4.003	RETS 2.2, Specification A: "With a radioactive gaseous effluent ... Specification, without delay suspend the release of radioactive gaseous effluents monitored by the affected channel or declare the channel inoperable, or change the setpoint so it is acceptable conservative."	Appendix B 1.1.1, Action A: "With an explosive gas ... Specification, declare the channel inoperable and take the ACTION shown in Table 1.1.1-1."	Controls for gaseous effluent monitoring instrumentation are being relocated to the ODCM. Specifications for explosive gas monitoring instrumentation will remain in Appendix B. The proposed explosive gas Technical Specifications are consistent with GL 89-01.
4.004	RETS 2.2, Specification B: "... radioactive gaseous effluent ... Table 2.2-1.... explain in the next Semiannual Radioactive Effluent Release Report ..."	Appendix B 1.1.1, Action B: "... explosive gas ... Table 1.1.1-1.... prepare and submit to the Commission, pursuant to Appendix B Technical Specification 4.3.1, a Special Report to explain ..."	Controls for gaseous effluent monitoring instrumentation are being relocated to the ODCM. Specifications for explosive gas monitoring instrumentation will remain in Appendix B. The proposed explosive gas Technical Specifications are consistent with GL 89-01.
4.005	RETS 3.2, Specifications: "Radioactive gaseous effluent monitoring ... CHANNEL CHECK, SOURCE CHECK, CHANNEL CALIBRATION and CHANNEL FUNCTIONAL TEST operations at the frequencies shown in Table 3.2-1."	Appendix B 2.1.1: "The explosive gas monitoring ... CHANNEL CHECK and CHANNEL CALIBRATION operations at the frequencies shown in Table 2.1.1-1."	Controls for gaseous effluent monitoring instrumentation are being relocated to the ODCM. Specifications for explosive gas monitoring instrumentation will remain in Appendix B. The proposed explosive gas Technical Specifications are consistent with GL 89-01.

TABLE OF PROPOSED CHANGES

ITEM #	CURRENT DOCUMENT SECTION/ WORDING	PROPOSED DOCUMENT SECTION/WORDING	JUSTIFICATION FOR CHANGE(S)
4.006	RETS Table 2.2-1, Items 2a & 2b, Applicability Column: 2a. "**" 2b. "**" "** During waste gas holdup system operation (treatment for primary system off gases.)"	Appendix B Table 1.1.1-1, Items 1a & 1b, Applicability Column: 1a. "*" 1b. "*" "* During waste gas holdup system operation (treatment for primary system off gases.)"	Editorial change "renumbering" table notation.
4.007	RETS Table 2.2-1, Radioactive Gaseous Effluent Monitoring Instrumentation, Items 2a & 2b, Action Column: 2a. "10" 2b. None given	Appendix B Table 1.1.1-1, Explosive Gas Monitoring Instrumentation, Items 1a &1b, Action Column: 1a. "1" 1b. "1"	Editorial change to renumber action statement and addition of same action statement for Item 1b. This represents an additional requirement.
4.008	RETS Table 3.2.-1, Radioactive Gaseous Effluents Monitoring Instrumentation Surveillance Requirements, Source Check & Functional Test Columns	Appendix B Table 2.1.1-1, Explosive Gas Monitoring Instrumentation Surveillance Requirements	The Source Check and Functional Test Columns of the current Technical Specification Table are not applicable to the new Table, Explosive Gas Monitoring Instrumentation Surveillance Requirements.
4.009	RETS Table 3.2-1, Items 2a & 2b, Channel Calibration Column: 2a. "M(3)" 2b. "M(4)"	Appendix B Table 2.1.1-1, Items 1a & 1b, Channel Calibration Column: 1a. "M(1)" 1b. "M(2)"	Editorial changes renumbering table notations due to relocation of text to ODCM.

TABLE OF PROPOSED CHANGES

ITEM #	CURRENT DOCUMENT SECTION/ WORDING	PROPOSED DOCUMENT SECTION/WORDING	JUSTIFICATION FOR CHANGE(S)
4.010	RETS Table 3.2-1, Items 2a & 2b, Modes in Which Surveillance Required Column: 2a. "**" 2b. "**" "** During waste gas holdup system operation (treatment for primary system off gases.)"	Appendix B Table 2.1.1-1, Items 1a and 1b, Modes in Which Surveillance Required Column: 1a. "*" 1b. "*" "* During waste gas holdup system operation (treatment for primary system off gases.)"	Editorial changes "renumbering" table notation.
4.011	RETS Table 3.2-1, Table Notations (3) and (4)	Appendix B Table 2.1.1-1, Table Notations (1) and (2)	Editorial change renumbering table notations.
4.012	RETS Table 3.2-1, Table Notations N.A., Q, 18M, 24M	Not Applicable	Editorial change deleting table notations not referenced in new Appendix B.
4.013	RETS 2.3.4, Specification A.a: "Refueling Water Storage Tank" RETS 3.3.4, Objective 1: "Refueling Water Storage Tank** ... ** After refueling operations, liquid from the reactor cavity will be sampled for radioactive material content prior to being pumped into the tank."	Appendix B 1.2.1, LCO: "a. Refueling Water Storage Tank** ... ** After refueling operations, liquid from the reactor cavity will be sampled for radioactive material content prior to being pumped into the tank."	Editorial change incorporating note ** from current RETS section 3.3.4. The note currently appears in the "Objective" paragraph of section 3.3.4 which is to be deleted.

TABLE OF PROPOSED CHANGES

ITEM #	CURRENT DOCUMENT SECTION/ WORDING	PROPOSED DOCUMENT SECTION/WORDING	JUSTIFICATION FOR CHANGE(S)
4.014	RETS 2.3.4, Specification A.e: "Outside Temporary Tank" RETS 3.3.4, Objective 5: "Outside Temporary Tank*** ... *** Liquid will be sampled for radioactive content prior to being pumped into the tank."	Appendix B 1.2.1, LCO: "... e. Outside Temporary Tank*** ... *** Liquid will be sampled for radioactive content prior to being pumped into the tank."	Editorial change incorporating note *** from current RETS section 3.3.4. The note currently appears in the "Objective" paragraph of section 3.3.4 which is to be deleted.
4.015	RETS 2.3.4, Liquid Holdup Tanks, Applicability: "Applies at all times to the quantity of radioactive material contained in the liquid holdup tanks."	Appendix B 1.2.1, Radioactive Liquid Effluent Holdup Tanks, Applicability: "At all times."	Editorial change eliminating unnecessary wording.
4.016	RETS 2.3.4, Specification B: "... tank, within 48 ... Semiannual Radioactive Effluent Release Report."	Appendix B 1.2.1, Action: "... tank. Within 48 ... Annual Radioactive Effluent Release Report.	Editorial changes: 1) making two sentences out of one for clarity, and 2) changing the frequency of the Radioactive Effluent Release Report from semiannually to annually in accordance with 10 CFR 50.36a.
4.017	RETS 2.4.5, Objective: "To limit the concentration ... holdup system to less ..."	Appendix B 1.3.1, LCO: "The concentration ... holdup system shall be limited to less ..."	Editorial changes to rephrase current wording into Standard Technical Specification LCO format.

TABLE OF PROPOSED CHANGES

ITEM #	CURRENT DOCUMENT SECTION/ WORDING	PROPOSED DOCUMENT SECTION/WORDING	JUSTIFICATION FOR CHANGE(S)
4.018	RETS 2.4.5, Applicability: "Applies at all times to the concentration of oxygen in the waste gas holdup system, whenever H_2 concentration exceeds 4% by volume."	Appendix B 1.3.1, Applicability: "At all times."	Editorial change eliminating unnecessary wording.
4.019	RETS 2.4.5, Specification B: "... volume without delay."	Appendix B 1.3.1, Action B: "... volume."	Editorial change deleting redundant wording.
4.020	RETS 3.4.5, Specification: "... Table 2.2-1 of Specification 2.2."	Appendix B 2.3.1: "... Appendix B Technical Specification Table 1.1.1-1."	Editorial change to reference renumbered TS section.
4.021	RETS 2.4.6, Objective: "To limit the quantity ... tank to ... (considered as Xe-133)."	Appendix B 1.3.2, LCO: "The quantity ... tank shall be limited to ... (considered as Xe-133)."	Editorial changes to rephrase current wording into Standard Technical Specification LCO format and make consistent with the draft Part 20 GL.
4.022	RETS 2.4.6, Applicability: "Applies at all times to the quantity of radioactivity contained in each gas storage tank."	Appendix B 1.3.2, Applicability: "At all times."	Editorial change eliminating unnecessary wording.
4.023	RETS 2.4.6, Specification: "... tank and within 48 ... limit."	Appendix B 1.3.2, Action: "... tank. Within 48 ... limit, and describe the events leading to this condition in the next Annual Radioactive Effluent Release Report."	Addition of reporting requirement consistent with current Appendix B Tech Spec 2.3.4B (proposed Appendix B Tech Spec 1.2.1).

TABLE OF PROPOSED CHANGES

ITEM #	CURRENT DOCUMENT SECTION/ WORDING	PROPOSED DOCUMENT SECTION/WORDING	JUSTIFICATION FOR CHANGE(S)
4.024	RETS 4.0, Bases for Radioactive Gaseous Effluent Monitoring Instrumentation: "The radioactive gaseous effluent instrumentation ... control as applicable ... holdup system. The OPERABILITY ... Criteria 60, 63 and 64 of Appendix A ..."	Appendix B 3.0, Bases for Explosive Gas Monitoring Instrumentation: "The explosive gas monitoring ... control the concentrations of potentially explosive gas mixtures in the waste gas holdup system. The OPERABILITY ... Criteria 60 of Appendix A ..."	Controls for gaseous effluent monitoring instrumentation are being relocated to the ODCM. Specifications for explosive gas monitoring instrumentation will remain in Appendix B. The proposed explosive gas Technical Specifications are consistent with GL 89-01.
4.025	RETS 4.0, Bases for Liquid Holdup Tanks: "... these Specifications ... limits of 10 CFR Part 20, Appendix B, Table II, Column 2 ... portable ..."	Appendix B 3.0, Bases for Liquid Holdup Tanks: "... this Specification ... values given in Appendix B, Table 2, Column 2 to 10 CFR 20.1001 - 20.2402 ... potable ..."	Changes consistent with draft Part 20 GL. Editorial change to correct typographical error "portable" to "potable."
4.026	RETS 5.1, Responsibilities: "... Appendix A Specification 6.5."	Appendix B 4.1, Responsibilities: "... Appendix A Technical Specification 6.5."	Editorial change.
4.027	RETS 5.2, Procedures and Programs: "... Appendix A Specification 6.8.1."	Appendix B 4.2, Procedures and Programs: "... Appendix A Technical Specifications 6.8.1 and 6.8.4."	Editorial change referencing applicable Tech Spec sections.
4.028	RETS 5.3.1, Special Reports: "... Appendix A Specification 6.9.2."	Appendix B 4.3.1, Special Reports: "... Appendix A Technical Specification 6.9.2. The ODCM also provides a listing of special reporting requirements."	Editorial change.

TABLE OF PROPOSED CHANGES

ITEM #	CURRENT DOCUMENT SECTION/ WORDING	PROPOSED DOCUMENT SECTION/WORDING	JUSTIFICATION FOR CHANGE(S)
4.029	5.3.2.1, Semiannual Radioactive Effluent Release Report: "Routine Radioactive ... Reports ... previous 6 months of operation ... submitted within 60 days after January 1 and July 1 of each year. The period of the first quarter shall begin with the date of initial criticality. The Radioactive Effluent Reports ... unit as outlined ... R.E.T.S...."	Appendix B 4.3.2.1, Annual Radioactive Effluent Release Report: "The Annual Radioactive ... Report ... previous year of operation ... prior to May 1 of each year. The report ... unit. The material provided shall be (1) consistent with the objectives outlined in the ODCM and PCP and (2) in conformance with 10 CFR 50.36a and Section IV.B.1 of Appendix I to 10 CFR Part 50. A full listing of the information to be contained in the Annual Radioactive Effluent Release Report is provided in the ODCM."	The detailed routine reporting requirements are being relocated to the ODCM. A summary of the requirements will remain in Appendix B. These changes are consistent with GL 89-01. Other change includes frequency of the Radioactive Effluent Release Report from semiannually to annually in accordance with 10 CFR 50.36a.

TABLE OF PROPOSED CHANGES

ITEM #	CURRENT DOCUMENT SECTION/ WORDING	PROPOSED DOCUMENT SECTION/WORDING	JUSTIFICATION FOR CHANGE(S)
4.030	5.3.2.2, Annual Radiological Environmental Operating Report: "Routine Radiological Environmental Operating Reports ... radiological environmental surveillance activities for the report period including ... "	Appendix B 4.3.2.2, Annual Radiological Environmental Operating Report: "An annual Radiological Environmental Operating Report ... Radiological Environmental Monitoring Program for the report period. The material provided shall be consistent with the objectives outlined in (1) the ODCM and (2) Sections IV.B.2, IV.B.3, and IV.C of Appendix I to 10 CFR Part 50. A full listing of the information to be contained in the Annual Radiological Environmental Operating Report is provided in the ODCM."	The detailed routine reporting requirements are being relocated to the ODCM. A summary of the requirements will remain in Appendix B. These changes are consistent with GL 89-01.

TABLE OF PROPOSED CHANGES

ITEM #	CURRENT DOCUMENT SECTION/ WORDING	PROPOSED DOCUMENT SECTION/WORDING	JUSTIFICATION FOR CHANGE(S)
4.031	RETS 5.7, Major Changes to Radioactive Liquid, Gaseous and Solid Waste Treatment Systems*: "... solid): 1. Shall be ... Semiannual ... * The information called for in this Specification will be submitted as part of the annual FSAR update."	Appendix B 4.3.3, Major Changes to Radioactive Liquid, Gaseous and Solid Waste Treatment Systems**: "... solid) shall be ... Annual ... ** The information called for in this Specification shall be submitted as part of the annual FSAR update."	Editorial changes including relocating this section to the Routine Reports section, 4.3.2; changing the frequency of the Radioactive Effluent Release Report from semiannually to annually in accordance with 10 CFR 50.36a; deleting "1" from the outline numbering scheme since there is no "2"; and changing the footnote "numbering" scheme to indicate more than one footnote on the new page.
4.032	RETS 5.7.1.d: "... predicted released ..."	Appendix B 4.3.3.d: "... predicted releases ..."	Editorial change to correct typographical error.
4.033	RETS 5.7.1.e: "... to individual ..."	Appendix B 4.3.3.e: "... to an individual ..."	Editorial change to correct typographical error.
4.034	RETS 5.4, Record Retention: "... radiological environmental monitoring program ... Appendix A Specification ..."	Appendix B 4.4, Record Retention: "... Radiological Environmental Monitoring Program ... Appendix A Technical Specification ..."	Editorial changes.

TABLE OF PROPOSED CHANGES

ITEM #	CURRENT DOCUMENT SECTION/ WORDING	PROPOSED DOCUMENT SECTION/WORDING	JUSTIFICATION FOR CHANGE(S)
4.035	RETS 5.5, Process Control Program, 5.5.2: "... Shall be submitted .... This submittal ... Sufficiently detailed information to totally support the rationale for the change without benefit of additional or supplemental information ... change did not reduce the ... existing criteria for solid wastes, and c. Documentation of the fact that the change has been reviewed and found acceptable by the PORC.... by the Resident Manager."	Appendix B 4.5, Process Control Program, 4.5.2: "... Shall be documented and records of reviews performed shall be retained as required by Appendix A Technical Specification 6.10.2.p. This documentation ... Sufficient information to support the change together with the appropriate analyses or evaluations justifying the change(s); and ... change will maintain the ... existing requirements of Federal, State, or other applicable regulations.... by the PORC and the approval of the Resident Manager.... "	Changes consistent with GL 89-01.

TABLE OF PROPOSED CHANGES

ITEM #	CURRENT DOCUMENT SECTION/ WORDING	PROPOSED DOCUMENT SECTION/WORDING	JUSTIFICATION FOR CHANGE(S)
4.036	5.5.2: Not applicable	4.5.2.3: "Shall be submitted to the Commission as a part of or concurrent with the Annual Radioactive Effluent Release Report for the period of the report in which any change to the PCP was made. Each change shall be identified by marking in the margin of the affected pages, clearly indicating the area of the page that was changed, and shall indicate the date (e.g., month/year) the change was implemented."	Current Appendix B Tech Specs 5.5.2.1 and 5.3.2.1 require changes to the PCP to be included in the Semiannual Radioactive Effluent Release Report. Therefore, although proposed Specification 4.5.2.3 is not required by GL 89-01, the requirement is consistent with other sections of the current Technical Specifications, and with the reporting requirements specified for changes to the ODCM by GL 89-01, with the exception that only the revised pages will be submitted rather than the entire PCP. Additionally, the frequency of the Radioactive Effluent Release Report is being changed from semiannually to annually in accordance with the change to 10 CFR 50.36a.

TABLE OF PROPOSED CHANGES

ITEM #	CURRENT DOCUMENT SECTION/ WORDING	PROPOSED DOCUMENT SECTION/WORDING	JUSTIFICATION FOR CHANGE(S)
4.037	RETS 5.6, Offsite Dose Calculation Manual (ODCM), 5.6.2: "... Shall be submitted .... This submittal ... Sufficiently detailed information to totally support the rationale for the change without benefit of additional or supplemental information. Information submitted should consist of a package of those pages of the ODCM to be changed with each page numbered and provided with an approval and date box, together with appropriate analyses or evaluations justifying the change(s) ... change will not reduce the accuracy of reliability of dose calculations or setpoint determinations, and c. Documentation of the fact that the change has been reviewed and found acceptable by the PORC.... the Resident Manager."	Appendix B 4.6, Offsite Dose Calculation Manual, 4.6.2: "... Shall be documented and records of reviews performed shall be retained as required by Appendix A Technical Specification 6.10.2.p. This documentation ... Sufficient information to support the change together with the appropriate analyses or evaluations justifying the changes(s) ... change will maintain the level of radioactive effluent control required pursuant to 10 CFR 20.1302, 40 CFR Part 190, 10 CFR 50.36a, and Appendix I to 10 CFR Part 50 and not adversely impact the accuracy or reliability of effluent dose or setpoint calculations ... the PORC and the approval of the Resident Manager."	Changes consistent with GL 89-01.

TABLE OF PROPOSED CHANGES

ITEM #	CURRENT DOCUMENT SECTION/ WORDING	PROPOSED DOCUMENT SECTION/WORDING	JUSTIFICATION FOR CHANGE(S)
4.038	5.6.2: Not applicable	4.6.2.3: "Shall be submitted to the Commission as a part of or concurrent with the Annual Radioactive Effluent Release Report for the period of the report in which any change to the ODCM was made. Each change shall be identified by marking in the margin of the affected pages, clearly indicating the area of the page that was changed, and shall indicate the date (e.g., month/year) the change was implemented."	Current Appendix B Tech Specs 5.6.2.1 and 5.3.2.1 require changes to the ODCM to be included in the Semiannual Radioactive Effluent Release Report. This proposed addition to Technical Specifications is consistent with other sections of the current Technical Specifications, and with the reporting requirements specified for changes to the ODCM by GL 89-01, with the exception that only the revised pages will be submitted rather than the entire ODCM. Additionally, the frequency of the Radioactive Effluent Release Report is being changed from semiannually to annually in accordance with 10 CFR 50.36a.

TABLE OF PROPOSED CHANGES

ITEM #	CURRENT DOCUMENT SECTION/ WORDING	PROPOSED DOCUMENT SECTION/WORDING	JUSTIFICATION FOR CHANGE(S)
4.039	RETS 5.8, Map Defining Unrestricted Areas for Radioactive Gaseous and Liquid Effluents: "... Figure 5.8-1.... 10 CFR 20.3 (a) (17).... The concept of UNRESTRICTED AREA ... LIMITING CONDITIONS FOR OPERATION ... achievable, pursuant to 10 CFR 50.36a."	Appendix B 4.7, Map Defining Unrestricted Areas for Radioactive Gaseous and Liquid Effluents: "... Figure 4.7-1.... 10 CFR 20.1003.... For calculations performed pursuant to 10 CFR Part 50.36a, the concept of UNRESTRICTED AREAS ... Radiological Effluent Controls ... achievable."	Changes consistent with draft Part 20 GL. Additionally, editorial change updating figure number.
4.040	RETS Figure 5.1-1, Map Defining Unrestricted Areas for Radioactive Gaseous and Liquid Effluents	Appendix B Figure 4.7-1, Map Defining Unrestricted Areas for Radioactive Gaseous and Liquid Effluents	New map replacing old resulting from change in definition of UNRESTRICTED AREA in accordance with 10 CFR Part 20.

TABLE OF PROPOSED CHANGES

ITEM #	CURRENT DOCUMENT SECTION/ WORDING	PROPOSED DOCUMENT SECTION/WORDING	JUSTIFICATION FOR CHANGE(S)

Table 5: Miscellaneous

5.001	RETS 1.2 and 1.12, Definitions MAXIMUM PERMISSIBLE CONCENTRATION (MPC) and VENTING, respectively	Not Applicable	These definitions are being deleted from Appendix B. The terms are not used in Appendix B, Appendix A, nor in the proposed REC. The term EFFLUENT CONCENTRATION replaces MAXIMUM PERMISSIBLE CONCENTRATION.
5.002	PCP 3.2.4 and 3.2.30 Plant Procedures RE-ADM-1-4 and RE-TRA-15-18	Not applicable	This is an adminstrative change to remove superceded procedures.
5.003	PCP 3.3.3 Richland (Washington) disposal site license	Not applicable	This is an administrative change; the Authority does not ship to Washington.
5.004	PCP 3.5.1 Pacific Nuclear Systems, Inc. Q.A. Manual...	Not applicable	This is an administrative change; the Authority does not use Pacific Nuclear Systems, Inc.
5.005	PCP 3.5.2 ...Topical Report No. TP-02-NP-1,	PCP 3.5.1...Topical Report No. TP-02-NP-A,	This is an adminstrative change to correct the report number.

ATTACHMENT IV TO IPN-98-018

PROPOSED CHANGES TO OFFSITE DOSE CALCULATION MANUAL (ODCM)

RESULTING FROM

PROPOSED CHANGES TO TECHNICAL SPECIFICATIONS

INCORPORATING RECOMMENDATIONS OF GENERIC LETTER 89-01

AND DRAFT PART 20 GENERIC LETTER

NEW YORK POWER AUTHORITY
INDIAN POINT 3 NUCLEAR POWER PLANT
DOCKET NO. 50-286
DPR-64

INDIAN POINT 3

OFFSITE DOSE CALCULATION MANUAL

Revision 12

ODCM

TABLE OF CONTENT

		PAGE
Table of Contents		i
List of Tables		iv
List of Figures		vi
References		vii
PART - I	**RADIOLOGICAL EFFLUENT CONTROLS**	
Chapter 1.0	DEFINITIONS	1-1
Chapter 2/3.0	RADIOLOGICAL EFFLUENT CONTROLS AND SURVEILLANCE REQUIREMENTS	
	2/3.1 Radioactive Liquid Effluent Monitoring Instrumentation	2/3-1
	2/3.2 Radioactive Gaseous Effluent Monitoring Instrumentation	2/3-7
	2/3.3 Radioactive Liquid Effluents	2/3-12
	2/3.3.1 Liquid Effluent Concentration	2/3-12
	2/3.3.2 Dose From Liquid Effluents	2/3-15
	2/3.3.3 Liquid Radwaste Treatment System	2/3-16
	2/3.4 Radioactive Gaseous Effluents	2/3-17
	2/3.4.1 Gaseous Effluent Dose Rates	2/3-17
	2/3.4.2 Dose From Noble Gases	2/3-21
	2/3.4.3 Dose From Iodine-131, Tritium, and Radionuclides in Particulate Form	2/3-22
	2/3.4.4 Gaseous Radwaste Treatment System	2/3-23
	2/3.5 NOT USED	
	2/3.6 Total Dose	2/3-24
	2/3.7 Radiological Environmental Monitoring Program	2/3-26
	2/3.8 Land Use Census	2/3-37
	2/3.9 Interlaboratory Comparison Program	2/3-38
Chapter 4.0	BASES	4-1

ODCM

TABLE OF CONTENT

		PAGE
Chapter 5.0	REPORTING REQUIREMENTS	
	5.1 Semiannual Radioactive Effluent Release Report	5-1
	5.2 Annual Radiological Environmental Operating Report	5-4
	5.3 Major Changes To Radioactive Liquid, Gaseous and Solid Waste Treatment Systems	5-5
PART - II	**OFFSITE DOSE CALCULATION MANUAL**	
Chapter 1.0	INSTRUMENTATION AND CONTROL	
	1.1 Effluent Monitoring System Description	1-1
	1.2 Setpoints	1-1
	1.2.1 Setpoints for Gaseous Effluent Monitors	1-1
	1.2.2 Setpoints for Liquid Effluent Monitors	1-2
Chapter 2.0	LIQUID EFFLUENTS	
	2.1 Liquid Effluent Releases - General Information	2-1
	2.2 Liquid Effluent Concentrations	2-5
	2.3 Liquid Effluent Dose Calculation Requirements	2-8
	2.4 Dose Methodology (Computer Calculation)	2-9
	2.5 Backup Dose Methodologies	2-12
	2.6 Site Specific Bioaccumulation and Dose Factors	2-12
Chapter 3.0	GASEOUS EFFLUENTS	
	3.1 Gaseous Effluents Releases-General Information	3-1
	3.2 Gaseous Effluent Dose Calculation Requirements	3-5
	3.3 Dose Calculations Methodology (Computer Calculation)	3-6
	3.3.1 Instantaneous Dose Rates - Noble Gas Releases	3-6
	3.3.2 Instantaneous Dose Rates - Radioiodine 131 and Particulate Releases	3-8
	3.3.3 Time Average Dose - Noble Gas Releases	3-9

ODCM

TABLE OF CONTENT

		PAGE
3.3.4	Time Average Dose - Radioiodines and Particulates	3-12
3.4	Backup Dose Methodologies	3-21
3.4.1	Instantaneous Dose Rates - Noble Gas Releases	3-21
3.4.2	Instantaneous Dose Rates - Radioiodine 131 and Particulate Release	3-22
3.4.3	Time Average Dose - Noble Gas Releases	3-22
3.4.4	Time Average Dose - Radioiodine 131 and Particulate Releases	3-24
3.5	Calculation of Meteorological Dispersion Factors	3-24
3.6	Justification for the Use of the Finite Cloud Assumption for Assessing Site Boundary Dose	3-28
Appendix 3-A	Calculation of Allowable Release Rates	3-79
Chapter 4.0	SAMPLE LOCATIONS	4-1
Appendix B -	Detection Limits	4-7

LIST OF TABLES

		PAGE
PART - I	**RADIOLOGICAL EFFLUENT CONTROLS**	
2.1-1	Radioactive Liquid Effluent Monitoring Instrumentation	2/3-2
3.1-1	Radioactive Liquid Effluent Monitoring Instrumentation Surveillance Requirements	2/3-5
2.2-1	Radioactive Gaseous Effluent Monitoring Instrumentation	2/3-8
3.2-1	Radioactive Gaseous Effluent Monitoring Instrumentation Surveillance Requirements	2/3-10
3.3-1	Radioactive Liquid Waste Sampling and Analysis Program	2/3-13
3.4-1	Radioactive Gaseous Waste Sampling and Analysis Program	2/3-18
2.7-1	Radiological Environmental Monitoring Program	2/3-28
2.7-2	Reporting Levels For Radioactivity Concentrations In Environmental Samples	2/3-34
3.7-1	Detection Capabilities For Environmental Sample Analysis	2/3-35
PART - II	**ODCM**	
1-1	Effluent Monitoring System Data	1-5
2-1	Adult Liquid Effluent Dose Factors	2-14
2-2	Teen Liquid Effluent Dose Factors	2-16
2-3	Child Liquid Effluent Dose Factors	2-18
2-4	Liquid Effluent Bioaccumulation Factors	2-20
3-1a	Inhalation Dose Factors for Adult	3-30
3-1b	Inhalation Dose Factors for Teen	3-32
3-1c	Inhalation Dose Factors for Child	3-34
3-1d	Inhalation Dose Factors for Infant	3-36
3-2	Ground Plan Dose Factors	3-38
3-3a	Ingestion Dose Factors for Adult	3-40
3-3b	Ingestion Dose Factors for Teen	3-42
3-3c	Ingestion Dose Factors for Infant	3-44
3-3d	Ingestion Dose Factors for Child	3-46
3-4	Total Body Dose Factors (Ki) from Noble Gases (Gamma)	3-48
3-5	Skin Dose Factors (Li) from Noble Gases (Beta)	3-49
3-6	Air Dose Factors (Mi) from Noble Gases (Gamma)	3-50

LIST OF TABLES

		PAGE
3-7	Air Dose Factors (Ni) from Noble Gases (Beta)	3-51
3-8	Dose Factors for Site Boundary Using Standard Isotope Mixture	3-52
3-9	Locations of Site Boundary and Nearest Residence	3-54
3-10a	Adult Inhalation Ri(I)	3-55
3-10b	Teen Inhalation Ri(I)	3-57
3-10c	Child Inhalation Ri(I)	3-59
3-10d	Infant Inhalation Ri(I)	3-61
3-11a	Adult Ingestion Ri(V)	3-63
3-11b	Teen Ingestion Ri(V)	3-65
3-11c	Child Ingestion Ri(V)	3-67
3-12a	Adult Grass/Cow/Milk Ri(C)	3-69
3-12b	Teen Grass/Cow/Milk Ri(C)	3-71
3-12c	Child Grass/Cow/Milk Ri(C)	3-73
3-12d	Infant Grass/Cow/Milk Ri(C)	3-75
3-13	Ground Plane Dose Factors Ri(G) and Ri(S)	3-77
4-1	Indian Point Station - Environmental Sampling Station Points	4-4

LIST OF FIGURES

		PAGE
PART - I	**RADIOLOGICAL EFFLUENT CONTROLS**	
Figure 1-1	Map Defining Unrestricted Areas for Radioactive Gaseous and Liquid Effluents	1-4
PART - II	**ODCM**	
Figure 1-1	Map Defining Unrestricted Areas for Radioactive Gaseous and Liquid Release Points	1-4
Figure 2-1	Radioactive Liquid Waste Effluent System Flow Diagram	2-21
Figure 3-1	Gaseous Radioactive Waste Effluent System Flow Diagram	3-88
Figure 4-1	Radiological Environmental Monitoring Sampling Stations - Near Site	4-2
Figure 4-2	Radiological Environmental Monitoring Sampling Stations - Away from Site	4-3

REFERENCES

1. U.S. Nuclear Regulatory Commission, "Preparation of Radiological Effluent Technical Specifications for Nuclear Power Plants", USNRC Report NUREG-0133, Washington D.C. 20555, October 1978.

2. M.E. Wrenn and J. W. Lentsch, "The Fate of Gamma-Emitting Radionuclides Released into the Hudson River Estuary and an Evaluation of Their Environmental Significance", New York University Medical Center, Institute of Environmental Medicine, 1974.

3. Regulatory Guide 1.109, "Calculation of Annual Doses to Man from Routine Releases of Reactor Effluents for the Purpose of Evaluating Compliance with 10CFR50, Appendix I, Revision 1, USNRC Washington D.C. 20555, October 1977.

4. "An Evaluation to Demonstrate the Compliance of the Indian Point Reactors with the Design Objectives of 10CFR50, Appendix I", Consolidated Edison Company of New York, Inc. and Power Authority of the State of New York, February 1977.

5. U.S. Nuclear Regulatory Commission, "XOQDOQ Program for the Meteorological Evaluation of Routine Effluent Releases at Nuclear Power Stations", USNRC Report NUREG-0324, Washington D.C. 10555, September 1977.

6. "Semi-Annual Report of Radioactivity in Solid Wastes and Releases of Radioactive Materials in Liquid and Gaseous Effluents for Indian Point Three", Power Authority of the State of New York, January 1, 1978 to June 30, 1980.

7. "Environmental Technical Specification Requirements for Indian Point Nuclear Generating Unit Number 3", Power Authority of the State of New York, December 12, 1975.

8. U.S. Nuclear Regulatory Commission, "Radiological Effluent Technical Specification for PWR's", USNRC Report NUREG-0472, Washington D.C. 20555.

9. Regulatory Guide 1,113, "Estimating Aquatic Dispersion of Effluents from Accidental and Routine Reactor Releases for the Purpose of Implementing Appendix ", Revision 1, USNRC, Washington D.C. 10555, October 1977.

10. AP-11 - Indian Point No. 3 Nuclear Power Plant Administrative Procedure, "Radioactive Effluents Control Program".

11. NUREG/CR-4007, 1984, "Lower Limit of Detection: Definition and Elaboration of a Proposed Position for Radiological Effluent and Environmental Measurements".

12. New York University Medical Center, "Radioecological Studies of the Hudson River Progress Report (1986-1987)", N.Y.U. New York, New York 10016, March 1988.

13. IPI-DM-153, "Antimony Dose Factors", IPS Memorandum to M. Kerns from D. Mayer, August 8, 1988.

14. New York University Medical Center, "Radiological Studies of the Hudson River Progress Report (1987-1988)", N.Y.U. New York, New York 10016, September 1988.

15. USNRC Regulatory Guide 1.111, "Methods of Estimating Atmospheric Transport and Dispersion of Gaseous Effluents in Routine Releases from Light-Water-Cooled Reactors," U.S. Nuclear Regulatory Commission (October 1977, Rev. 1).

16. CRE Computer Code AEOLUS-3, "A Computer Code for the Determination of Atmospheric Dispersion and Deposition of Nuclear Power Plant Effluents During Continuous, Intermittent and Accident Conditions in Open-Terrain Sites, Coastal Sites and Deep-River Valleys," RAD-004, Version 1, Level 2 (June 1991).

REFERENCES

17. CRE Engineering Calculation IP3-CALC-RAD-00001, "IP3 - Revised ODCM Atmospheric Dispersion Parameters (Multi-Year Hourly Data, Mixed-Mode Releases and Valley Effects)," by John N. Hamawi (July 1991).

18. USNRC Regulatory Guide 1.23, "Onsite Meteorological Programs," U.S. Nuclear Regulatory Commission (2/17/72) (and proposed revisions).

19. USNRC Regulatory Guide 1.145, "Atmospheric Dispersion Models for Potential Accident Consequence Assessments at Nuclear Power Plants," U.S. Nuclear Regulatory Commission (August 1979).

20. D. H. Slade, Ed., "Meteorology and Atomic Energy - 1968," USAEC, TID-24190 (1968).

21. WCRE-93-157, "IP3-Annual Average Atmospheric Dispersion and Deposition factors for Ground-Level Release, December , 1993 Memorandum Hamawi to Mayer.

1.0 DEFINITIONS

1.1 ACTION

That part of a Control that prescribes remedial measures required under designated conditions.

1.2 CHANNEL CALIBRATION

Adjustment of channel output such that it responds, with acceptable range and accuracy, to known values of the parameter which the channel measures. Calibration shall encompass the entire channel, including alarm or trip, and shall be deemed to include the channel functional test.

1.3 CHANNEL CHECK

A qualitative determination of acceptable operability by observation of channel behavior during operation. This determination shall include, where possible, comparison of the channel with other independent channels measuring the same variable.

1.4 CHANNEL FUNCTIONAL TEST

Injection of a simulated signal into the channel to verify that it is operable, including alarm and/or trip initiating action.

1.5 EFFLUENT CONCENTRATION

The EFFLUENT CONCENTRATION is that concentration of a radionuclide specified in 10 CFR 20, Table 2 of Appendix B.

1.6 GASEOUS RADWASTE TREATMENT SYSTEM

A GASEOUS RADWASTE TREATMENT SYSTEM is any system designed and installed to reduce radioactive gaseous effluents by collecting primary coolant system offgases from the primary system and providing for delay or holdup for the purpose of reducing the total radioactivity prior to release to the environment.

1.7 LIQUID RADWASTE TREATMENT SYSTEM

A LIQUID RADWASTE TREATMENT SYSTEM is any system designed and installed to reduce radioactive liquid effluents by collecting liquid radwaste and providing for processing capability and/or holdup for the purpose of reducing and monitoring the total radioactivity prior to release to the environment.

1.8 MAXIMUM PERMISSIBLE CONCENTRATION WATER (MPCW)

MPCW is that concentration of a radionuclide equal to 10 times the concentration of a radionuclide specified in 10 CFR 20, Appendix B, Table 2, Column 2.

1.9 MEMBER(S) OF THE PUBLIC

MEMBER(S) OF THE PUBLIC means any individual except when that individual is receiving an occupational dose.

1.10 OCCUPATIONAL DOSE

Occupational dose means the dose received by an individual in the course of employment in which the individual's assigned duties involve exposure to radiation or to radioactive material from licensed and unlicensed sources of radiation, whether in the possession of the licensee or other person. Occupational dose does not include dose received from background radiation, from any medical administration the individual has received, from exposure administered to individuals administered radioactive material and released in accordance with 35.75, from voluntary participation in medical research programs, or as a member of the public.

1.11 OFFSITE DOSE CALCULATION MANUAL (ODCM)

The OFFSITE DOSE CALCULATION MANUAL shall contain the current methodology and parameters used in the calculation of offsite doses resulting from radioactive gaseous and liquid effluents, in the calculation of gaseous and liquid effluent monitoring Alarm/Trip Setpoints, and in the conduct of the Radiological Environmental Monitoring Program. The ODCM shall also contain (1) the Radioactive Effluent Controls and Radiological Environmental Monitoring Programs required by Appendix A Technical Specification 6.8.4 and (2) descriptions of the information that should be included in the Annual Radiological Environmental Operating and Radioactive Effluent Release Reports required by Appendix A Technical Specifications 4.3.2.1 and 4.3.2.2.

1.12 OPERABLE - OPERABILITY

Properly installed in the system and capable of performing the intended functions in the intended manner as verified by testing and tested at the frequency required by the Radiological Effluent Controls. Implicit in this definition shall be the assumption that all necessary attendant controls, electrical power source, cooling or seal water, lubrication or other auxiliary equipment that are required for the system, subsystem, train, component or device to perform its function(s) are also capable of performing their related support function(s).

1.13 PROCESS CONTROL PROGRAM (PCP)

The PROCESS CONTROL PROGRAM shall contain the current formulas, sampling, analyses, tests, and determinations to be made to ensure that the processing and packaging of solid radioactive wastes based on demonstrated processing of actual or simulated wet solid wastes will be accomplished in such a way as to assure compliance with 10 CFR Parts 20, 61 and 71 and Federal and State regulations and other requirements governing the disposal of solid radioactive waste.

1.14 PURGE - PURGING

PURGE or PURGING is the controlled process of discharging air or gas from a confinement in such a manner that replacement air or gas is required to purify the confinement.

1.15 RATED THERMAL POWER (RTP)

RTP shall be a total reactor core heat transfer rate to the reactor coolant of 3025 MWt. ("Rated Power" and "Rated Thermal Power" are used interchangeably throughout the Technical Specifications).

1.16 SITE BOUNDARY

The SITE BOUNDARY (see Figure 1-1) means that line beyond which the land or property is not owned, leased, or otherwise controlled by either site licensee.

1.17 SOURCE CHECK

A SOURCE CHECK shall be the qualitative assessment of channel response when the channel sensor is exposed to a source of increased radioactivity.

1.18 THERMAL POWER

THERMAL POWER shall be the total reactor core heat transfer rate to the reactor coolant.

1.19 UNRESTRICTED AREA

An UNRESTRICTED AREA (see Figure 1-1) means an area, access to which is neither limited nor controlled by the licensee.

1.20 VENTILATION EXHAUST TREATMENT SYSTEM

A VENTILATION EXHAUST TREATMENT SYSTEM is any system designed and installed to reduce gaseous radioiodine or radioactive material in particulate form in effluents by passing ventilation or vent exhaust gases through charcoal absorbers and/or HEPA filters for the purpose of removing iodines or particulates from the gaseous exhaust stream prior to the release to the environment. Such a system is not considered to have any effect on noble gas effluents. Engineered Safety Feature (ESF) atmospheric cleanup systems are not considered to be VENTILATION EXHAUST TREATMENT SYSTEM components.

Figure 1-1

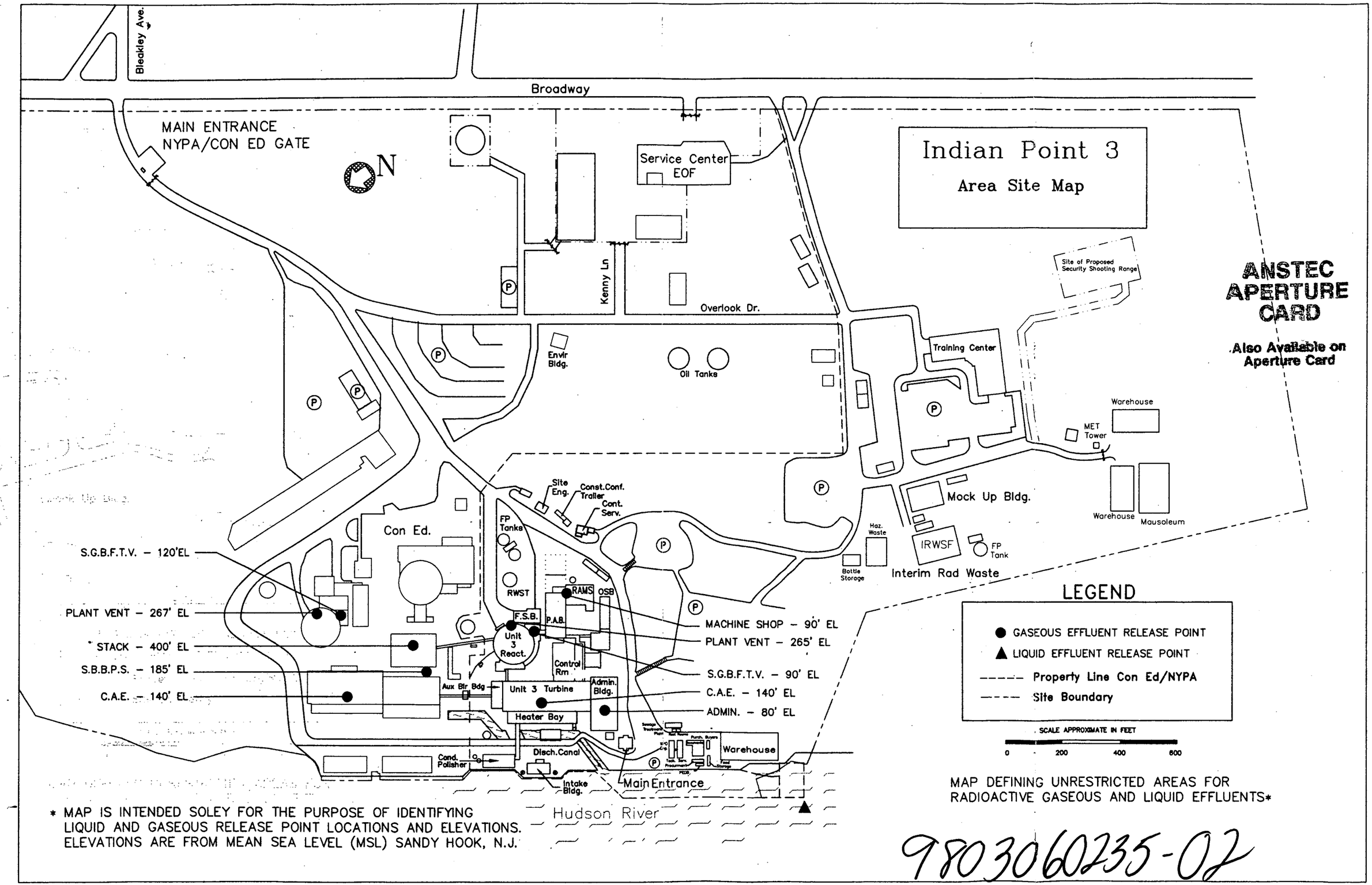
Indian Point 3
Area Site Map
Bleakley Ave.
Broadway
MAIN ENTRANCE
NYPA/CON ED GATE
N
Service Center
EOF
Kenny Ln
Overlook Dr.
Site of Proposed Security Shooting Range
Training Center
Envir Bldg.
Oil Tanks
Warehouse
MET Tower
Mock Up Bldg.
Warehouse
Mausoleum
Haz. Waste
IRWSF
FP Tank
Bottle Storage
Interim Rad Waste
Site Eng.
Const.Conf. Trailer
Cont. Serv.
FP Tanks
Con Ed.
RWST
RAMS
OSB
F.S.B.
P.A.B.
Unit 3 React.
Control Rm
Aux Bir Bldg
Unit 3 Turbine
Admin. Bldg.
Heater Bay
Cond. Polisher
Disch.Canal
Intake Bldg.
Warehouse
Main Entrance
Hudson River
S.G.B.F.T.V. – 120'EL
PLANT VENT – 267' EL
STACK – 400' EL
S.B.B.P.S. – 185' EL
C.A.E. – 140' EL
MACHINE SHOP – 90' EL
PLANT VENT – 265' EL
S.G.B.F.T.V. – 90' EL
C.A.E. – 140' EL
ADMIN. – 80' EL
LEGEND
GASEOUS EFFLUENT RELEASE POINT
LIQUID EFFLUENT RELEASE POINT
Property Line Con Ed/NYPA
Site Boundary
SCALE APPROXIMATE IN FEET
0 200 400 600
MAP DEFINING UNRESTRICTED AREAS FOR RADIOACTIVE GASEOUS AND LIQUID EFFLUENTS*
* MAP IS INTENDED SOLEY FOR THE PURPOSE OF IDENTIFYING LIQUID AND GASEOUS RELEASE POINT LOCATIONS AND ELEVATIONS. ELEVATIONS ARE FROM MEAN SEA LEVEL (MSL) SANDY HOOK, N.J.
ANSTEC APERTURE CARD
Also Available on Aperture Card
9803060235-02

2/3.0 RADIOLOGICAL EFFLUENT CONTROLS AND SURVEILLANCE REQUIREMENTS

2.1 Radioactive Liquid Effluent Monitoring Instrumentation

CONTROL:

In accordance with Appendix A Technical Specification 6.8.4.a.1, the radioactive liquid effluent monitoring instrumentation channels shown in Table 2.1-1 shall be OPERABLE with their alarm/trip setpoints set to ensure that the limits of Control 2.3.1 are not exceeded. The alarm/trip setpoints of these channels shall be determined and adjusted in accordance with the methodology and parameters in the OFFSITE DOSE CALCULATION MANUAL (ODCM).

APPLICABILITY: As shown in Table 2.1-1.

ACTION:

A. With a radioactive liquid effluent monitoring instrumentation channel alarm/trip setpoint less conservative than required by the above Control, immediately suspend the release of radioactive liquid effluents monitored by the affected channel, or declare the channel inoperable, or change the setpoint so it is acceptably conservative.

B. With less than the minimum number of radioactive liquid effluent monitoring instrumentation channels OPERABLE, take the ACTION shown in Table 2.1-1. Exert best efforts to return the instruments to OPERABLE status within 30 days and if unsuccessful, explain in the next Annual Radioactive Effluent Release Report, pursuant to Reporting Requirement 5.1, why the inoperability was not corrected within this time frame.

C. Report all deviations in the Annual Radioactive Effluent Release Report.

3.1 SURVEILLANCE REQUIREMENTS:

Each radioactive liquid effluent monitoring instrumentation channel shall be demonstrated OPERABLE by performance of the CHANNEL CHECK, SOURCE CHECK, CHANNEL CALIBRATION and CHANNEL FUNCTIONAL TEST operations at the frequencies shown in Table 3.1-1.

TABLE 2.1-1

RADIOACTIVE LIQUID EFFLUENT MONITORING INSTRUMENTATION		
INSTRUMENT	**MINIMUM CHANNELS OPERABLE***	**ACTION**
1. GROSS RADIOACTIVITY MONITORS PROVIDING ALARM AND AUTOMATIC TERMINATION OF RELEASE		
a. Liquid Radwaste Effluent Line** (R-18 and R-61)	(1)	1
b. Steam Generator Blowdown Effluent Line (R-19)	(1)	2
2. GROSS BETA OR GAMMA RADIOACTIVITY MONITORS PROVIDING ALARM BUT NOT PROVIDING AUTOMATIC TERMINATION OF RELEASE		
a. Service Water System Effluent Line (R-16A, R-16B, R-23)	(1)	3
3. FLOW RATE MEASUREMENT DEVICES		
a. Liquid Radwaste Effluent Line	(1)	4
b. Steam Generator Blowdown Effluent Line	(1)	4
4. RADIOACTIVITY RECORDERS***		
a. Liquid Radwaste Effluent Line	(1)	1
b. Steam Generator Blowdown Effluent Line	(1)	2
5. TANK LEVEL INDICATING DEVICES****		
a. Refueling Water Storage Tank	(1)	5
b. Primary Water Storage Tank	(1)	5
c. Monitor Tank #31	(1)	5
d. Monitor Tank #32	(1)	5

TABLE 2.1-1 *(Continued)*

TABLE NOTATION

* During release by the pathway, channels shall be OPERABLE and in service during such release on a continuous, uninterrupted basis. Except that outages are permitted, within the time frame and limitations of the specified action, for the purpose of maintenance of required tests, checks and calibration.

** The condensate polisher regenerative waste release path does not need to be monitored unless a primary to secondary side leak is present.

*** Required only if alarm/trip set point is based on recorder-controller.

**** Tanks included in this Control are those outdoor tanks that are not surrounded by liners, dikes, or walls capable of holding the tank contents and do not have tank overflows and surrounding area drains connected to the liquid radwaste treatment system.

TABLE 2.1-1 *(Continued)*

TABLE NOTATION

ACTION 1 - With the number of channels OPERABLE less than required by the Minimum Channels OPERABLE requirement, effluent releases may continue provided that prior to initiating a release:

a. At least two independent samples are analyzed in accordance with Radiological Effluent Control Surveillance Requirement 3.3.1.A,

and

b. At least two technically qualified members of the Facility Staff independently verify the release rate calculations and discharge line valving:

Otherwise, suspend release of radioactive effluents via this pathway.

ACTION 2 - With the number of channels OPERABLE less than required by the Minimum Channels OPERABLE requirement, effluent releases via this pathway may continue provided grab samples are analyzed either for principal gamma emitters or for gross radioactivity (beta or gamma) at a lower limit of detection of at least 5×10^{-7} microcurie/ml (as Cs-137):

a. At least once per 12 hours when the specific activity of the secondary coolant is greater than 0.01 microcurie/gram DOSE EQUIVALENT I-131.

b. At least once per 24 hours when the specific activity of the secondary coolant is less than or equal to 0.01 microcurie/gram DOSE EQUIVALENT I-131.

ACTION 3 - With the number of channels OPERABLE less than required by the Minimum Channels OPERABLE requirement, effluent releases via this pathway may continue provided that, at least once per 12 hours, grab samples are collected and analyzed for gross radioactivity (beta or gamma) at a lower limit of detection of at least 5×10^{-7} microcurie/ml (as Cs-137).

ACTION 4 - With the number of channels OPERABLE less than required by the Minimum Channels OPERABLE requirement, effluent releases via this pathway may continue provided the flow rate is estimated at least once per 4 hours during actual releases. Pump performance curves may be used to estimate flow.

ACTION 5 - With the number of channels OPERABLE less than required by the Minimum Channels OPERABLE requirement, liquid additions to this tank may continue provided the tank liquid level is estimated during all liquid additions to the tank.

TABLE 3.1-1

RADIOACTIVE LIQUID EFFLUENT MONITORING INSTRUMENTATION SURVEILLANCE REQUIREMENTS

INSTRUMENT	CHANNEL CHECK	SOURCE CHECK	CHANNEL CALIBRA-TION	CHANNEL FUNC-TIONAL TEST
1. GROSS RADIOACTIVITY MONITORS PROVIDING ALARM AND AUTOMATIC TERMINATION OF RELEASE				
a. Liquid Radwaste Effluent Line (R-18 and R-61*****)	D*	D*	24M(3)	Q(1)*
b. Steam Generator Blowdown Effluent Line (R-19)	D*	M*	24M(3)	Q(1)*
2. GROSS BETA OR GAMMA RADIOACTIVITY MONITORS PROVIDING ALARM BUT NOT PROVIDING AUTOMATIC TERMINATION OF RELEASE				
a. Service Water System Effluent Line (R-16A and R-16B)	D*	M*	24M(3)	Q(2)*
b. Service Water System Effluent Line (R-23)	D*	M*	18M(3)	Q(2)*
3. FLOW RATE MEASUREMENT DEVICES				
a. Liquid Radwaste Effluent Line	D(4)	N.A.	18M	Q
b. Steam Generator Blowdown Effluent Line	D(4)	N.A.	24M	N.A.
4. RADIOACTIVITY RECORDERS				
a. Liquid Radwaste Effluent Line	D*	N.A.	24M	Q****
b. Steam Generator Blowdown Effluent Line	D*	N.A.	24M	Q****
5. TANK LEVEL INDICATING DEVICES***				
a. Refueling Water Storage Tank	D**	N.A.	18M	18M
b. Primary Water Storage Tank	D**	N.A.	24M	24M
c. Monitor Tank #31	D**	N.A.	18M	18M
d. Monitor Tank #32	D**	N.A.	18M	18M

TABLE 3.1-1 *(Continued)*

TABLE NOTATION

* When this pathway is utilized for releases, with frequency no more than indicated.

** During liquid additions to the tank.

*** Tanks included in this Control are those outdoor tanks that are not surrounded by liners, dikes, or walls capable of holding the tank contents and do not have tank overflows and surrounding area drains connected to the liquid radwaste treatment system.

**** Required only if alarm/trip setpoint is based on recorder-controller.

***** The condensate polisher regenerative waste release path does not need to be monitored unless a primary to secondary leak is present.

(1) The CHANNEL FUNCTIONAL TEST shall also demonstrate that automatic isolation of this pathway and control room alarm annunciation occur if the following condition exists:

1. Instrument indicates measured levels above the alarm/trip setpoint.

(2) The CHANNEL FUNCTIONAL TEST shall also demonstrate that control room alarm annunciation occurs if any of the following conditions exists:

1. Instrument indicates measured levels above the alarm setpoint.

2. Instrument controls not set in operate mode.

(3) Radioactive calibration standards used for CHANNEL CALIBRATIONS shall be traceable to the National Institute of Standards and Technology (NIST) or an aliquot of calibration solution shall be analyzed with instrumentation which is calibrated with NIST traceable standards. (Standards from suppliers who participate in measurement assurance activities with NIST are acceptable).

(4) CHANNEL CHECK shall consist of verifying indication of flow during periods of release. CHANNEL CHECK shall be made at least once per 24 hours on days on which continuous, periodic, or batch releases are made.

D	Daily	M	Monthly
N.A.	Not Applicable	Q	Quarterly
18M	At least once per 18 months.		
24M	At least once per 24 months.		

2.2 RADIOACTIVE GASEOUS EFFLUENT MONITORING INSTRUMENTATION

CONTROL:

In accordance with Appendix A Technical Specification 6.8.4.a.1, the radioactive gaseous effluent monitoring instrumentation channels shown in Table 2.2-1 shall be OPERABLE with their alarm/trip setpoints set to ensure that the limits of Control 2.4.1 are not exceeded. The alarm/trip setpoints of these channels shall be determined and adjusted in accordance with the methodology and parameters in the ODCM.

APPLICABILITY: As shown in Table 2.2-1.

ACTION:

A. With a radioactive gaseous effluent monitoring instrumentation channel alarm/trip setpoint less conservative than required by the above Control, immediately suspend the release of radioactive gaseous effluents monitored by the affected channel or declare the channel inoperable, or change the setpoint so it is acceptably conservative.

B. With less than the minimum number of radioactive gaseous effluent monitoring instrumentation channels OPERABLE, take the ACTION shown in Table 2.2-1. Exert best efforts to return the instruments to OPERABLE status within 30 days and, if unsuccessful, explain in the next Annual Radioactive Effluent Release Report, pursuant to Reporting Requirement 5.1, why the inoperability was not corrected within this time frame.

C. Report all deviations in the Annual Radioactive Effluent Release Report.

3.2 SURVEILLANCE REQUIREMENTS:

Radioactive gaseous effluent monitoring instrumentation channels shall be demonstrated OPERABLE by performance of the CHANNEL CHECK, SOURCE CHECK, CHANNEL CALIBRATION and CHANNEL FUNCTIONAL TEST operations at the frequencies shown in Table 3.2-1.

TABLE 2.2-1

RADIOACTIVE GASEOUS EFFLUENT MONITORING INSTRUMENTATION			
INSTRUMENT	**MINIMUM CHANNELS OPERABLE**	**APPLICABILITY**	**ACTION**
1. WASTE GAS HOLDUP SYSTEM			
a. Noble Gas Activity Monitor-Providing Alarm (R-20)	(1)	**	6
2. CONDENSER AIR EJECTOR			
a. Noble Gas Activity Monitor (R-15)	(1)	*	8
3. ENVIRONMENTAL RELEASE POINTS (PLANT VENT***, ADMIN. BUILDING, CONTROLLED AREA, RAD MACHINE SHOP)			
a. Noble Gas Activity Monitor (R-14, R-27, R-46 and R-59)	(1)	*	8, 11
b. Iodine Sampler	(1)	*	10
c. Particulate Sampler	(1)	*	10
d. Flow Rate Monitor	(1)	*	7
e. Sampler Flow Rate Monitor	(1)	*	7
4. CONTAINMENT PURGE SYSTEM			
a. Containment Noble Gas Activity - Monitor (R-12) Providing Alarm and Automatic Termination of Release	(1)	*	9

TABLE NOTATION

* Channels shall be OPERABLE and in service on a continuous basis during release via this pathway, except that outages are permitted, within the time frame of the specified action for the purpose of maintenance and performance of required tests, checks and calibrations.

** During waste gas holdup system operation (treatment for primary system offgases).

TABLE 2.2-1 *(Continued)*

*** This will also monitor releases from the Vent Header, Auxiliary Building Vents, Fuel Storage Building Vents, and the Rad Waste Area Vent.

ACTION 6 - With the number of channels OPERABLE less than that required by the Minimum Channels OPERABLE requirement, the radioactive content of the receiving gas decay tank shall be determined daily to ensure compliance with Appendix B, Technical Specification 1.3.2.

ACTION 7 - With the number of channels OPERABLE less than required by the Minimum Channels OPERABLE requirement, effluent releases via this pathway may continue provided the flow rate is estimated at least once per 4 hours.

ACTION 8 - With the number of channels OPERABLE less than required by the Minimum Channels OPERABLE requirement, effluent releases via this pathway may continue provided grab samples are taken at least once per 12 hours and these samples are analyzed for gross activity within 24 hours.

ACTION 9 - With the number of channels OPERABLE less than required by the Minimum Channels OPERABLE requirement, immediately suspend PURGING of radioactive effluents via this pathway. During containment building ventilation in the cold shutdown condition, continuous monitoring and automatic termination of release is not required. One continuous monitor at the final release point (plant vent) is sufficient.

ACTION 10 - With the number of channels OPERABLE less than required by the Minimum Channels OPERABLE requirement, effluent releases via the effected pathway may continue provided samples are continuously collected with auxiliary sampling equipment as required in Table 3.4-1.

ACTION 11 - With the number of channels OPERABLE less than that required by the Minimum Channels OPERABLE requirement for the plant vent, the contents of the radwaste gas decay tanks may be released to the environment provided that prior to initiating the release:

a. At least two independent samples of the tank contents are analyzed

and,

b. At least two technically qualified members of the facilities staff independently verify the release rate calculations and discharge valve lineup.

TABLE 3.2-1

RADIOACTIVE GASEOUS EFFLUENT MONITORING INSTRUMENTATION SURVEILLANCE REQUIREMENTS					
INSTRUMENT	CHANNEL CHECK	SOURCE CHECK	CHANNEL CALIBRATION	FUNCTIONAL TEST	MODES IN WHICH SURVEIL-LANCE REQUIRED
1. WASTE GAS HOLDUP SYSTEM					
a. Noble Gas Activity Monitor - Providing Alarm (R-20)	D	M	24M(2)	Q(1)**	*
2. CONDENSER AIR EJECTOR					
a. Noble Gas Activity Monitor (R-15)	D	M	24M(2)	Q(1)**	*
3. ENVIRONMENTAL RELEASE POINTS (PLANT VENT, ADMIN. BUILDING CONTROLLED AREA. VENT, RAD.MACHINE SHOP VENT)					
a. Noble Gas Activity Monitor (R-14, R-27, R-46, and R-59)	D	M	24M(2)	Q(1)**	*
b. Iodine Sampler	W	N.A.	N.A.	N.A.	*
c. Particulate Sampler	W	N.A.	N.A.	N.A.	*
d. Flow Rate Monitor	D	N.A.	18M	Q	*
e. Sampler Flow Rate Monitor	D	N.A.	18M	N.A.	*
4. CONTAINMENT PURGE SYSTEM					
a. Containment Noble Gas Activity Monitor (R-12) - Providing Alarm and Automatic Termination of Release	D	M	24M(2)	Q(1)**	*

TABLE NOTATION

* Surveillance is required at all times except when monitor has been removed from service in accordance with Table 2.2-1.

** Will not include operation of automatic control functions.

TABLE 3.2-1 *(Continued)*

(1) The CHANNEL FUNCTIONAL TEST shall also demonstrate that control room alarm annunciation occurs if any of the following conditions exists:

1. Instrument indicates measured levels above the alarm setpoint.

2. Instrument controls not set in operate mode.

(2) Radioactive Calibration Standards used for CHANNEL CALIBRATIONS shall be traceable to the National Institute of Standards and Technology (NIST) or an aliquot of calibration gas shall be analyzed with instrumentation which is calibrated with NIST traceable standards (standards from suppliers which participate in measurement assurance activities with NIST are acceptable).

D	Daily
M	Monthly
N.A.	Not Applicable
Q	Quarterly
18M	At least once per 18 months.
24M	At least once per 24 months.

2.3 RADIOACTIVE LIQUID EFFLUENTS

2.3.1 LIQUID EFFLUENT CONCENTRATION

CONTROL:

In accordance with Appendix A Technical Specifications 6.8.4.a.2 and 6.8.4.a.3, the concentration of radioactive material released in liquid effluents to UNRESTRICTED AREAS shall be limited to 10 times the concentration values specified in Appendix B, Table 2, Column 2 to 10 CFR 20 for radionuclides other than dissolved or entrained noble gases. For dissolved or entrained noble gases, the concentration shall be limited to 2×10^{-4} microcuries/ml.

APPLICABILITY: At all times.

ACTION:

With the concentration of radioactive material released in liquid effluents to UNRESTRICTED AREAS exceeding the above limits, immediately restore the concentration to within these limits.

3.3.1 SURVEILLANCE REQUIREMENTS:

A. Radioactive liquid wastes shall be sampled and analyzed according to the sampling and analysis program of Table 3.3.1-1.

B. The results of the radioactivity analyses shall be used in accordance with the methodology and parameters in the ODCM to assure that the concentrations at the point of release are maintained within the limits of Control 2.3.1.

TABLE 3.3.1-1

RADIOACTIVE LIQUID WASTE SAMPLING AND ANALYSIS PROGRAM

Liquid Release Type	Sampling Frequency	Minimum Analysis Frequency	Type of Activity Analysis	Lower Limit of Detection (LLD)[a] (uCi/ml)
A. Batch Waste Release Tanks[b]	B Each Batch	B Each Batch	Principal Gamma Emitters[c]	5×10^{-7}
			Mo-99, Ce-144	5×10^{-6}
			I-131	1×10^{-6}
	B One Batch/M	M	Dissolved & Entrained Gases (Gamma Emitters)	1×10^{-5}
	B Each Batch	M Composite[d]	H-3	1×10^{-5}
			Gross Alpha	1×10^{-7}
	B Each Batch	Q Composite[d]	Sr-89, Sr-90	5×10^{-8}
			Fe-55	1×10^{-6}
B. Continuous Releases[e,f]	3/W Composite[d]	W Composite[d]	Principal Gamma Emitters	5×10^{-7}
			Mo-99, Ce-144	5×10^{-6}
			I-131	1×10^{-6}
	M Grab Sample	M	Dissolved & Entrained Gases (Gamma Emitters)	1×10^{-5}
	W Composite[d]	M Composite[d]	H-3	1×10^{-5}
			Gross Alpha	1×10^{-7}
	W Composite[d]	Q Composite[d]	Sr-89, Sr-90	5×10^{-8}
			Fe-55	1×10^{-6}

TABLE 3.3.1-1 *(Continued)*

TABLE NOTATION

Frequency Notation

B = Batch
W = Weekly
M = Monthly
Q = Quarterly

[a]The LLD is defined, for purposes of these Controls, as the smallest concentration of radioactive material in a sample that will yield a net count, above system background, that will be detected with 95% probability with only 5% probability of falsely concluding that a blank observation represents a "real" signal. Equations used in the calculation of the LLD for a particular measurement system are presented in the ODCM.

It should be recognized that the LLD is defined as an a priori (before the fact) limit representing the capability of a measurement system and not as an a posteriori (after the fact) limit for a particular measurement.

[b]A batch release is the discharge of liquid wastes of a discrete volume. Prior to samplings for analyses, each batch shall be isolated, and then thoroughly mixed to assure representative sampling. (Steam Generators may be considered a batch release for reporting purpose during shutdown condition but should be analyzed in accordance with the continuous release section of table.)

[c]The principal gamma emitters for which the LLD Control applies exclusively are the following radionuclides: Mn-54, Fe-59, Co-58, Co-60, Zn-65, Cs-134, Cs-137; and Ce-141. This list does not mean that only these nuclides are to be monitored. Other gamma peaks that are identifiable, together with those of the above nuclides, shall also be analyzed and reported in the Annual Radioactive Effluent Release Report pursuant to Reporting Requirement 5.1.

[d]A composite sample is one in which the quantity of liquid sampled is proportional to the quantity of liquid waste discharged and in which the method of sampling employed results in a specimen that is representative of the liquids released.

[e]A continuous release is the discharge of liquid wastes of a nondiscrete volume, e.g., from a volume of a system that has an input flow during the continuous release.

[f]Steam generator feedwater shall be monitored for principal gamma emitters when steam generator blowdown exceeds 3×10^{-5} uci/ml and releases to the environment. This activity concentration is evaluated in accordance with the methodology presented in the ODCM.

2.3.2 DOSE FROM LIQUID EFFLUENTS

CONTROLS:

In accordance with Appendix A Technical Specifications 6.8.4.a.4 and 6.8.4.a.5, the dose or dose commitment to a MEMBER OF THE PUBLIC from radioactive materials in liquid effluents released, from each reactor unit, to UNRESTRICTED AREAS shall be limited:

1. During any calendar quarter to less than or equal to 1.5 mrems to the total body and to less than or equal to 5 mrems to any organ,

   and

2. During any calendar year to less than or equal to 3 mrems to the total body and to less than or equal to 10 mrems to any organ.

APPLICABILITY: At all times.

ACTION:

With the calculated dose from the release of radioactive materials in liquid effluents exceeding any of the above limits, in lieu of a Licensee Event Report, prepare and submit to the Commission within 30 days, pursuant to Appendix A Technical Specification 6.9.2, a Special Report that identifies the cause(s) for exceeding the limit(s) and defines the corrective action(s) that have been taken to reduce the release(s) and the proposed corrective actions to be taken to assure that subsequent releases will be in compliance with the above limits. This Special Report shall also include (1) the results of radiological analyses of the drinking water source and (2) the radiological impact on finished drinking water supplies with regard to the requirements of 40 CFR Part 141.*

3.3.2 SURVEILLANCE REQUIREMENTS:

Cumulative dose contributions from liquid effluents for the current calendar quarter and the current calendar year shall be determined in accordance with the methodology and parameters in the ODCM at least once per month.

---

* Applicable only if drinking water supply is taken from the receiving water body within 3 miles of the plant discharge. In the case of river sited plants this is 3 miles downstream only.

2.3.3 LIQUID RADWASTE TREATMENT SYSTEM

CONTROL:

In accordance with Appendix A Technical Specification 6.8.4.a.6, the liquid radwaste treatment system shall be used when the projected doses due to the liquid effluent, from each reactor unit, to UNRESTRICTED AREAS would exceed 0.06 mrem to the total body or 0.2 mrem to any organ in a 31 day period.

APPLICABILITY: At all times.

ACTION:

With radioactive liquid waste being discharged without treatment and in excess of the above limits, in lieu of a Licensee Event Report, prepare and submit to the Commission within 30 days, pursuant to Appendix A Technical Specification 6.9.2, a Special Report that includes the following information:

1. Explanation of why liquid radwaste was being discharged without treatment, identification of any inoperable equipment or subsystems, and the reason for the inoperability,

2. Action(s) taken to restore the inoperable equipment to OPERABLE status, and

3. Summary description of action(s) taken to prevent a recurrence.

3.3.3 SURVEILLANCE REQUIREMENTS:

Doses due to liquid releases from each reactor unit to UNRESTRICTED AREAS shall be projected at least once per month in accordance with the methodology and parameters in the ODCM when the liquid radwaste treatment systems are not being fully utilized.

2.4 RADIOACTIVE GASEOUS EFFLUENTS

2.4.1 GASEOUS EFFLUENT DOSE RATES

CONTROL:

In accordance with Appendix A Technical Specifications 6.8.4.a.3 and 6.8.4.a.7, the dose rate due to radioactive materials released in gaseous effluents from the site to areas at and beyond the SITE BOUNDARY shall be limited to the following:

1. For noble gases: Less than or equal to a dose rate of 500 mrems/yr to the total body and less than or equal to a dose rate of 3000 mrems/yr to the skin,

   and

2. For iodine-131, for tritium, and for all radionuclides in particulate form with half lives greater than 8 days: Less than or equal to a dose rate of 1500 mrems/yr to any organ.

APPLICABILITY: At all times.

ACTION:

With the dose rate(s) exceeding the above limits, immediately restore the release rate to within the above limit(s).

3.4.1 SURVEILLANCE REQUIREMENTS:

A. The dose rate due to noble gases in gaseous effluents shall be determined to be within the above limits in accordance with the methodology and parameters in the ODCM.

B. The dose rate due to iodine-131, tritium, and all radionuclides in particulate form with half lives greater than 8 days in gaseous effluents shall be determined to be within the above limits in accordance with the methodology and parameters in the ODCM by obtaining representative samples and performing analyses in accordance with the sampling and analysis program specified in Table 3.4.1-1.

TABLE 3.4.1-1

RADIOACTIVE GASEOUS WASTE SAMPLING AND ANALYSIS PROGRAM				
Gaseous Release Type	Sampling Frequency	Minimum Analysis Frequency	Type of Activity Analysis	Lower Limit of Detection (LLD[a]) (uCi/cc)
A. Waste Gas Storage	B Each Tank Grab Sample	B Each Tank	Principal Noble Gas Gamma Emitters[b]	$1x10^{-4}$
B. Containment Purge	B Each PURGE Grab Sample	B Each PURGE	Principal Noble Gas Gamma Emitters[b]	$1x10^{-4}$
C. Condenser Air Ejector	Grab Sample	M	Principal Noble Gas Gamma Emitters[b]	$1x10^{-4}$
D. Environmental Release Points (Plant Vent, Admin. Bldg. Controlled Area Vent, Radioactive Machine Shop Vent)	M[c] Grab Sample	M[c]	Principal Noble Gas Gamma Emitters[b]	$1x10^{-4}$
	M[d,e] Grab	M[d,e]	H-3	$1x10^{-6}$
	Continuous[f]	W[g] Charcoal Sample	I-131	$1x10^{-12}$
	Continuous[f]	W[g] Particulate Sample	Principal Gamma Emitters[b] (I-131, Others)	$1x10^{-11}$
	Continuous[f]	M Composite Particulate Sample	Gross Alpha	$1x10^{-11}$
	Continuous[f]	Q Composite Particulate Sample	Sr-89, Sr-90	$1x10^{-11}$
	Continuous[f]	Noble Gas Monitor	Noble Gases Gross Beta or Gamma	$1x10^{-6}$

TABLE 3.4.1-1 *(Continued)*

TABLE NOTATION

Frequency Notation

B = Batch
W = Weekly
M = Monthly
Q = Quarterly

[a]The LLD is defined, for purposes of these Controls, as the smallest concentration of radioactive material in a sample that will yield a net count, above system background, that will be detected with 95% probability with only 5% probability of falsely concluding that a blank observation represents a "real" signal. Equations used in the calculation of the LLD for a particular measurement system are presented in the ODCM.

It should be recognized that the LLD is defined as an a priori (before the fact) limit representing the capability of a measurement system and not as an a posteriori (after the fact) limit for a particular measurement.

[b]The principal gamma emitters for which the LLD Control applies exclusively are the following radionuclides: Kr-87, Kr-88, Xe-133, Xe-133m, Xe-135, and Xe-138 for gaseous emissions and Mn-54, Fe-59, Co-58, Co-60, Zn-65, Mo-99, Cs-134, Cs-137, Ce-141 and Ce-144 for particulate emissions. This list does not mean that only these nuclides are to be monitored. Other gamma peaks that are identifiable, together with those of the above nuclides, shall also be analyzed and reported in the Annual Radioactive Effluent Release Report pursuant to Reporting Requirement 5.1.

[c]The main plant vent shall be sampled and analyzed following shutdown, startup, or a THERMAL POWER change (within one hour) exceeding 15 percent of RATED THERMAL POWER unless either (1) analysis shows that the DOSE EQUIVALENT I-131 concentration in the primary coolant has not increased more than a factor of 3: or (2) the noble gas activity monitor shows that effluent activity has not increased by more than a factor of 3. Under no circumstances would iodine samples be required more than once per day. Plant vent Tritium grab samples shall be taken at least once per 24 hours when the refueling canal is flooded unless continuous sampling equipment is in use.

[d]Plant vent tritium grab samples shall be taken at least once per 24 hours when the refueling canal is flooded unless continuous sampling equipment is in use.

[e]Plant vent tritium grab samples shall be taken at least once per 7 days from the ventilation exhaust from the spent fuel pool area, whenever spent fuel is in the spent fuel pool unless continuous sampling equipment is in use.

TABLE 3.4.1-1 *(Continued)*

TABLE NOTATION

[f]The ratio of the sample flow rate to the sampled steam flow rate shall be known for the time period covered by each dose or dose rate calculation made in accordance with Controls 2.4.1, 2.4.2 and 2.4.3.

[g]Samples shall be changed at least once per 7 days and analyses shall be completed within 48 hours after changing, or after removal from sampler. Sampling shall also be performed at least once per 24 hours for at least 7 days following each shutdown, startup or THERMAL POWER change exceeding 15 percent of RATED THERMAL POWER in one hour and analyses shall be completed within 48 hours of changing. When samples collected for 24 hours are analyzed, the corresponding LLDs may be increased by a factor of 10. This requirement does not apply if either (1) analysis shows that the DOSE EQUIVALENT I-131 concentration in the primary coolant has not increased more than a factor of 3; or (2) the noble gas monitor shows that effluent activity has not increased more than a factor of 3.

2.4.2 DOSE FROM NOBLE GASES

CONTROLS:

In accordance with Appendix A Technical Specifications 6.8.4.a.5 and 6.8.4.a.8, the air dose due to noble gases released in gaseous effluents, from each reactor unit, to areas at and beyond the SITE BOUNDARY shall be limited to the following:

1. During any calendar quarter: Less than or equal to 5 mrads for gamma radiation and less than or equal to 10 mrads for beta radiation.

   and,

2. During any calendar year: Less than or equal to 10 mrads for gamma radiation and less than or equal to 20 mrads for beta radiation.

APPLICABILITY: At all times.

ACTION:

With the calculated air dose from radioactive noble gases in gaseous effluents exceeding any of the above limits, in lieu of a Licensee Event Report, prepare and submit to the Commission within 30 days, pursuant to Appendix A Technical Specification 6.9.2, a Special Report that identifies the cause(s) for exceeding the limit(s) and defines the corrective actions that have been taken to reduce the releases and the proposed corrective actions to be taken to assure that subsequent releases will be in compliance with the above limits.

3.4.2 SURVEILLANCE REQUIREMENTS:

Cumulative dose contributions for the current calendar quarter and current calendar year for noble gases shall be determined in accordance with the ODCM at least once per month.

2.4.3 DOSE FROM IODINE-131, TRITIUM, AND RADIONUCLIDES IN PARTICULATE FORM

CONTROLS:

In accordance with Appendix A Technical Specifications 6.8.4.a.5 and 6.8.4.a.9, the dose to a MEMBER OF THE PUBLIC from iodine-131, tritium and all radionuclides in particulate form with half-lives greater than 8 days in gaseous effluents released, from each reactor unit, to areas at and beyond the SITE BOUNDARY shall be limited to the following:

1. During any calendar quarter: Less than or equal to 7.5 mrems to any organ

   and,

2. During any calendar year: Less than or equal to 15 mrems to any organ.

APPLICABILITY: At all times.

ACTION:

With the calculated dose from the release of iodine-131, tritium, and radionuclides in particulate form with half lives greater than 8 days, in gaseous effluents exceeding any of the above limits, in lieu of a Licensee Event Report, prepare and submit to the Commission within 30 days, pursuant to Appendix A Technical Specification 6.9.2, a Special Report that identifies the cause(s) for exceeding the limit and defines the corrective actions that have been taken to reduce the releases and the proposed corrective actions to be taken to assure that subsequent releases will be in compliance with the above limits.

3.4.3 SURVEILLANCE REQUIREMENTS:

Cumulative dose contributions for the current calendar quarter and current calendar year for iodine-131, tritium, and radionuclides in particulate form with half lives greater than 8 days shall be determined in accordance with the methodology and parameters in the ODCM at least once per month.

2.4.4 GASEOUS RADWASTE TREATMENT SYSTEM

CONTROL:

In accordance with Appendix A Technical Specification 6.8.4.a.6, the appropriate GASEOUS RADWASTE TREATMENT SYSTEM and the appropriate VENTILATION EXHAUST TREATMENT SYSTEM shall be used to reduce radioactive materials in gaseous waste prior to their discharge when the projected gaseous effluent air doses due to gaseous effluent releases, from each reactor unit, to areas at and beyond the SITE BOUNDARY would exceed 0.2 mrad for gamma radiation and 0.4 mrad for beta radiation in a 31 day period. The VENTILATION EXHAUST TREATMENT SYSTEM shall be used to reduce radioactive materials in gaseous waste prior to their discharge when the projected doses due to gaseous effluent releases, from each reactor unit, to areas at and beyond the SITE BOUNDARY would exceed 0.3 mrem to any organ of a MEMBER OF THE PUBLIC in a 31 day period.

APPLICABILITY: At all times.

ACTION:

With gaseous waste being discharged without treatment and in excess of the above limits, in lieu of a Licensee Event Report, prepare and submit to the Commission within 30 days, pursuant to Appendix A Technical Specification 6.9.2, a Special Report that includes the following information:

1. Explanation of why gaseous radwaste was being discharged without treatment, identification of any inoperable equipment or subsystems, and the reason for the inoperability,

2. Action(s) taken to restore the inoperable equipment to OPERABLE status,

   and

3. Summary description of action(s) taken to prevent a recurrence.

3.4.4 SURVEILLANCE REQUIREMENTS:

Doses due to gaseous releases from each reactor unit to areas at and beyond the SITE BOUNDARY shall be projected at least once per month in accordance with the methodology and parameters in the ODCM when the GASEOUS RADWASTE TREATMENT SYSTEMS are not being fully utilized.

2.5/3.5 SOLID RADIOACTIVE WASTE CONTROLS AND SURVEILLANCE REQUIREMENTS:

These sections are contained in the PCP.

2.6 TOTAL DOSE

CONTROL:

In accordance with Appendix A Technical Specification 6.8.4.a.10, limit the annual (calendar year) dose or dose commitment to any MEMBER OF THE PUBLIC due to releases of radioactivity and to direct radiation from uranium fuel cycle sources to less than or equal to 25 mrems to the total body or any organ, except the thyroid, which shall be limited to less than or equal to 75 mrems.

APPLICABILITY: At all times.

ACTION:

A. With calculated doses from the release of radioactive materials in liquid or gaseous effluents exceeding twice the limits of Control 2.3.2.A, 2.4.2.A or 2.4.3.A, calculations should be made, including direct radiation contributions from the reactor units and from outside storage tanks, to determine whether the above limits have been exceeded.

B. If such is the case, in lieu of a Licensee Event Report, prepare and submit to the Commission within 30 days, pursuant to Appendix A Technical Specification 6.9.2, a Special Report that defines the corrective action to be taken to reduce subsequent releases to prevent recurrence of exceeding the above limits and includes the schedule for achieving conformance with the above limits. This Special Report, as defined in 10 CFR Part 20.2203(a)(4), shall include an analysis that estimates the radiation exposure (dose) to a MEMBER OF THE PUBLIC from uranium fuel cycle sources, including all effluent pathways and direct radiation, for the calendar year that includes the release(s) covered by this report. It shall also describe levels of radiation and concentrations of radioactive material involved, and the cause of the exposure levels or concentrations. If the estimated dose(s) exceeds the above limits and if the release condition resulting in violation of 40 CFR Part 190 has not already been corrected, the Special Report shall include a request for a variance in accordance with the provisions of 40 CFR Part 190. Submittal of the report within 30 days is considered a timely request, and a variance is granted until staff action on the request is complete.

3.6 SURVEILLANCE REQUIREMENTS:

A. Cumulative dose contributions from liquid and gaseous effluents shall be determined in accordance with Surveillance Requirements 3.3.2, 3.4.2, 3.4.3 and in accordance with the methodology and parameters in the ODCM.

B. Cumulative dose contributions from direct radiation from the reactor units and from radwaste storage tanks shall be determined in accordance with the methodology and parameters in the ODCM. This requirement is applicable only under conditions set forth in Control 2.6.

2.7 RADIOLOGICAL ENVIRONMENTAL MONITORING PROGRAM

CONTROL:

In accordance with Appendix A Technical Specification 6.8.4.b.1, the Radiological Environmental Monitoring Program shall be conducted as specified in Table 2.7-1.

APPLICABILITY: At all times.

ACTION:

A. With the Radiological Environmental Monitoring Program not being conducted as specified in Table 2.7-1, in lieu of a Licensee Event Report, prepare and submit to the Commission, in the Annual Radiological Environmental Operating Report required by Reporting Requirement 5.2, a description of the reasons for not conducting the program as required and the plans for preventing a recurrence.

B. With the level of radioactivity as the result of plant effluents in an environmental sampling medium at a specified location exceeding the reporting levels of Table 2.7-2 when averaged over any calendar quarter, in lieu of a Licensee Event Report, prepare and submit to the Commission within 30 days, pursuant to Appendix A Technical Specification 6.9.2, a Special Report that identifies the cause(s) for exceeding the limit(s) and defines the corrective actions to be taken to reduce radioactive effluents so that the potential annual dose to A MEMBER OF THE PUBLIC is less than the calendar year limits of Controls 2.3.2, 2.4.2, and 2.4.3. When more than one of the radionuclides in Table 2.7-2 are detected in the sampling medium, this report shall be submitted if:

$$\frac{\text{concentration (1)}}{\text{reporting level (1)}} + \frac{\text{concentration (2)}}{\text{reporting level (2)}} + \ldots \geq 1.0$$

When radionuclides other than those in Table 2.7-2 are detected and are the result of plant effluents, this report shall be submitted if the potential annual dose to A MEMBER OF THE PUBLIC is equal to or greater than the calendar year limits of Controls 2.3.2, 2.4.2, and 2.4.3. This report is not required if the measured level of radioactivity was not the result of plant effluents; however, in such an event, the condition shall be reported and described in the Annual Radiological Environmental Operating Report.

C. With milk or fresh leafy vegetable samples unavailable from one or more of the sample locations required by Table 2.7-1, identify locations for obtaining replacement samples and add them to the Radiological Environmental Monitoring Program within 30 days. The specific locations from which samples were unavailable may then be deleted from the monitoring program. In lieu of a Licensee Event Report and pursuant to Reporting Requirement 5.1, identify the cause of the unavailability of samples and identify the new location(s) for obtaining replacement samples in the next Annual Radioactive Effluent Release Report and also include in the report a revised figure(s) and table for the ODCM reflecting the new location(s).

3.7 SURVEILLANCE REQUIREMENTS:

The radiological environmental monitoring samples shall be collected pursuant to Table 2.7-1 from the specific locations given in the table and figure(s) in the ODCM and the detection capabilities required by Table 3.7-1.

TABLE 2.7-1

RADIOLOGICAL ENVIRONMENTAL MONITORING PROGRAM			
Exposure Pathway and/or Sample	**Number of Representative Samples and Sample Locations[a]**	**Sampling and Collection Frequency**	**Type and Frequency of Analysis**
1. Direct Radiation[b]	40 routine monitoring stations (DR1-DR40) with two or more dosimeters for measuring and recording integrated dose continuously placed as follows: an inner ring of stations, one in each meteorological sector in the general area of the site boundary (DR1-DR16) an outer ring of stations, one in each meteorological sector in the 6 to 8 km range from the site (DR17-DR32) the balance of the stations (DR33-DR40) to be placed in special interest areas and in one area to serve as a control station.	Quarterly	Gamma dose quarterly

TABLE 2.7-1 *(Continued)*

RADIOLOGICAL ENVIRONMENTAL MONITORING PROGRAM			
Exposure Pathway and/or Sample	**Number of Representative Samples and Sample Locations[a]**	**Sampling and Collection Frequency**	**Type and Frequency of Analysis**
2. Airborne Radioiodine and Particulates	Samples from 5 locations (A1-A5): 3 samples (A1-A3) from close to the 3 site boundary locations in different sectors, of the highest calculated annual average ground level D/Q. 1 sample (A4) from the vicinity of a community having the highest calculated annual average ground level D/Q. 1 sample (A5) from a control location as for example 15-30 km distant and in the least prevalent wind direction.	Continuous sampler operation with collection weekly, or more frequently if required by dust loading	Radioiodine Canister: I-131 analysis weekly. Particulate Sampler: Gross beta radioactivity analysis following filter change;[d] Gamma isotopic analysis[e] of composite (by location) quarterly
3. Waterborne			
a. Surface	1 sample upstream[f] (Wa1) 1 sample downstream (Wa2)	Composite sample over 1 month period[g]	Gamma isotopic analysis[e] monthly. Composite for tritium analysis quarterly.

TABLE 2.7-1 *(Continued)*

RADIOLOGICAL ENVIRONMENTAL MONITORING PROGRAM			
Exposure Pathway and/or Sample	**Number of Representative Samples and Sample Locations[a]**	**Sampling and Collection Frequency**	**Type and Frequency of Analysis**
3. Waterborne			
b. Drinking	1 sample (Wb1) of the nearest surface drinking supply	Grab monthly	Gross beta and gamma isotopic analysis monthly. Composite for tritium analysis quarterly.
c. Sediment from Shoreline	2 samples (Wc1-Wc2) 1 sample (Wc1) from downstream area with existing or potential recreational value. 1 control sample (Wc2) from an upstream area.	2 annually at least 90 days apart	Gamma isotopic analysis[e]
4. Ingestion			
a. Milk	Samples from milking animals in 3 locations (Ia1-Ia3) within 5 km distance having the highest dose potential. If there are none, then 1 sample from milking animals in each of 3 areas (Ia1-Ia3) between 5 to 8 km distant if available where doses are calculated to be greater than 1 mrem per yr[h]. 1 sample from milking animals at a control location (Ia4), 15-30 km distant and in the least prevalent wind direction.	Semimonthly when animals are on pasture; monthly at other times. Con-currently with indicator locations.	Gamma isotopic[e] and I-131 analysis semimonthly when animals are on pasture; monthly at other times.

TABLE 2.7-1 *(Continued)*

RADIOLOGICAL ENVIRONMENTAL MONITORING PROGRAM			
Exposure Pathway and/or Sample	**Number of Representative Samples and Sample Locations[a]**	**Sampling and Collection Frequency**	**Type and Frequency of Analysis**
4. Ingestion			
b. Fish and Invertebrates	2 samples (Ib1, Ib2) 1 sample (Ib1) of each of 2 species commercially and/or recreationally important species of fish or invertebrate in the vicinity of the discharge when available. 1 sample (Ib2) of each of 2 commercially and/ or recreationally important species (the same species as in Ib1 if available) from an area not influenced by plant discharge.	Sample in season, or semi-annually if they are not seasonal	Gamma isotopic analysis[e]
c. Food Products	Samples of 3 different kinds of broad leaf vegetation (edible or inedible) grown nearest each of two different offsite locations of highest predicted annual average ground level D/Q if milk sampling is not performed (Ic1-Ic2).	Monthly when available	Gamma isotopic[e] and I-131 analysis
	1 sample of each of the similar broad leaf vegetation grown 15-30 km distant in the least prevalent wind direction if milk sampling is not performed (Ic3).	Monthly when available	Gamma isotopic[e] and I-131 analysis

TABLE 2.7-1 *(Continued)*

TABLE NOTATION

[a]The code letters in parenthesis (e.g., DR1, A1, etc.) refer to sample locations as specified in the ODCM. Specific parameters of distance and direction sector from the centerline of one reactor, and additional description where pertinent, shall be provided for each and every sample location in Table 2.7-1 in a table and figure(s) in the ODCM. Refer to NUREG-0133, "Preparation of Radiological Effluent Technical Specifications for Nuclear Power Plant," October 1978, and to Radiological Assessment Branch Technical Position, Revision 1, November 1979. Deviations are permitted from the required sampling schedule if specimens are unobtainable due to hazardous conditions, seasonal unavailability, malfunction of automatic sampling equipment and other legitimate reasons. If specimens are unobtainable due to sampling equipment malfunction, every effort shall be made to complete corrective action prior to the end of the next sampling period. All deviations from the sampling schedule shall be documented in the Annual Radiological Environmental Operating Report pursuant to Reporting Requirement 5.2. It is recognized that, at times, it may not be possible or practicable to continue to obtain samples of the media of choice at the most desired location or time. In these instances suitable alternative media and locations may be chosen for the particular pathway in question and appropriate substitutions made within 30 days in the Radiological Environmental Monitoring Program. In lieu of a Licensee Event Report and pursuant to Reporting Requirement 5.1, identify the cause of the unavailability of samples for that pathway and identify the new location(s) for obtaining replacement samples in the next Annual Radioactive Effluent Release Report and also include in the report a revised figure(s) and table for the ODCM reflecting the new location(s).

[b]One or more instruments, such as a pressurized ion chamber, for measuring and recording dose rate continuously may be used in place of, or in addition to, integrating dosimeters. For the purposes of this table, a thermoluminescent dosimeter (TLD) is considered to be one phosphor; two or more phosphors in a packet are considered as two or more dosimeters. Film badges shall not be used as dosimeters for measuring direct radiation.

[c]The purpose of this sample is to obtain background information. If it is not practical to establish control locations in accordance with the distance and wind direction criteria, other sites that provide valid background data may be substituted.

[d]Airborne particulate sample filters shall be analyzed for gross beta radioactivity 24 hours or more after sampling to allow for radon and thoron daughter decay. If gross beta activity in air particulate samples is greater than ten times the yearly mean, of the previous calendar year, of control samples, gamma isotopic analysis shall be performed on the individual samples.

TABLE 2.7-1 *(Continued)*

TABLE NOTATION

[e]Gamma isotopic analysis means the identification and quantification of gamma emitting radionuclides that may be attributable to the effluents from the facility.

[f]"Upstream" sample shall be taken near the intake structures as described in the ODCM. The "downstream sample" shall be taken from the mixing zone at the diffuser to the discharge canal.

[g]A composite sample is one in which the quantity (aliquot) of liquid sampled shall be collected at time intervals that are very short (e.g., hourly) relative to the compositing period (e.g., monthly) in order to assure obtaining a representative sample.

[h]The dose shall be calculated for the maximum organ and age group using the methodology and parameters in the ODCM.

TABLE 2.7-2

REPORTING LEVELS FOR RADIOACTIVITY CONCENTRATIONS IN ENVIRONMENTAL SAMPLES					
Reporting Levels					
Analysis	Water (pCi/ℓ)	Airborne Particulate or Gases (pCi/m^3)	Fish (pCi/kg, wet)	Milk (pCi/ℓ)	Food Products (pCi/kg, wet)
H-3	20,000*				
Mn-54	1,000		30,000		
Fe-59	400		10,000		
Co-58	1,000		30,000		
Co-60	300		10,000		
Zn-65	300		20,000		
Zr-Nb-95	400				
I-131	2**	0.9		3	100
Cs-134	30	10	1,000	60	1,000
Cs-137	50	20	2,000	70	2,000
Ba-La-140	200			300	

* For drinking water samples. This is 40 CFR Part 141 value. If no drinking water pathway exists, a value of 30,000 pCi/ℓ may be used.

** If no drinking water pathway exists, a value of 20 pCi/ℓ may be used.

TABLE 3.7-1

DETECTION CAPABILITIES FOR ENVIRONMENTAL SAMPLE ANALYSIS[a]

	LOWER LIMIT OF DETECTION (LLD)[b,c]					
Analysis	Water (pCi/ℓ)	Airborne Particulate or Gases (pCi/m³)	Fish (pCi/kg, wet)	Milk (pCi/ℓ)	Food Products (pCi/kg, wet)	Sediment (pCi/kg, dry)
gross beta	4	0.01				
H-3	2,000*					
Mn-54	15		130			
Fe-59	30		260			
Co-58, 60	15		130			
Zn-65	30		260			
Zr-Nb-95	15					
I-131	1**	0.07		1	60	
Cs-134	15	0.05	130	15	60	150
Cs-137	18	0.06	150	18	80	180
Ba-La-140	15			15		

TABLE NOTATION

* If no drinking water pathway exists, a value of 3,000 pCi/ℓ may be used.

** If no drinking water pathway exists, a value of 15 pCi/ℓ may be used.

TABLE 3.7-1 (Continued)

[a]This list does not mean that only these nuclides are to be considered. Other peaks that are identifiable, together with those of the above nuclides, shall also be analyzed and reported in the Annual Radiological Environmental Operating Report pursuant to Reporting Requirement 5.2.

[b]Required detection capabilities for thermoluminescent dosimeters used for environmental measurements are given in Regulatory Guide 4.13.

[c]The LLD is defined, for purposes of these Controls as the smallest concentration of radioactive material in a sample that will yield a net count, above system background, that will be detected with 95% probability with only 5% probability of falsely concluding that a blank observation represents a "real" signal. Equations used in the calculation of the LLD for a particular measurement system are presented in the ODCM.

It should be recognized that the LLD is defined as an a priori (before the fact) limit representing the capability of a measurement system and not as an a posteriori (after the fact) limit for a particular measurement. Analyses shall be performed in such a manner that the stated LLDs will be achieved under routine conditions. Occasionally background fluctuations, unavoidable small sample sizes, the presence of interfering nuclides, or other uncontrollable circumstances may render these LLDs unachievable. In such cases, the contributing factors shall be identified and described in the Annual Radiological Environmental Operating Report pursuant to Reporting Requirement 5.2.

2.8 LAND USE CENSUS

CONTROL:

In accordance with Appendix A Technical Specification 6.8.4.b.2, conduct a land use census which identifies within a distance of 8 km (5 miles) the location in each of the 16 meteorological sectors of the nearest milk animal, the nearest residence and the nearest garden of greater than $50m^2$ ($500\ ft^2$) producing broad leaf vegetation. Broad leaf vegetation sampling of at least three different kinds of vegetation may be performed at the SITE BOUNDARY in each of two different direction sectors with the highest predicted D/Qs in lieu of the garden census. The Controls for broad leaf vegetation sampling in Table 2.7-1.4c shall be followed, including analysis of control samples.

APPLICABILITY: At all times.

ACTION:

A. With a land use census identifying a location(s) that yields a calculated dose or dose commitment greater than the values currently being calculated in Control 3.4.3, in lieu of a Licensee Event Report, identify the new location(s) in the next Annual Radioactive Effluent Release Report, pursuant to Reporting Requirement 5.1.

B. With a land use census identifying a location(s) that yields a calculated dose or dose commitment (via the same exposure pathway) two times greater than at a location from which samples are currently being obtained in accordance with Control 2.7, add the new location(s) to the Radiological Environmental Monitoring Program within 30 days. The sampling location(s), excluding the control station location, having the lowest calculated dose or dose commitment(s), via the same exposure pathway, may be deleted from this monitoring program after (October 31) of the year in which this land use census was conducted. In lieu of a Licensee Event Report and pursuant to Reporting Requirement 5.1, identify the new location(s) in the next Annual Radioactive Effluent Release Report and also include in the report a revised figure(s) and table for the ODCM reflecting the new location(s).

3.8 SURVEILLANCE REQUIREMENTS:

The land use census shall be conducted during the growing season at least once per calendar year using that information that will provide the best results, such as by a door-to-door survey, aerial survey or by consulting local agriculture authorities. The results of the land use census shall be included in the Annual Radiological Environmental Operating Report pursuant to Reporting Requirement 5.2.

2.9 INTERLABORATORY COMPARISON PROGRAM

CONTROL:

In accordance with Appendix A Technical Specification 6.8.4.b.3, perform analyses on radioactive materials supplied as part of an Interlaboratory Comparison Program that has been approved by the Commission.

APPLICABILITY: At all times.

ACTION:

With analyses not being performed as required above, report the corrective actions taken to prevent a recurrence to the Commission in the Annual Radiological Environmental Operating Report pursuant to Reporting Requirement 5.2.

3.9 SURVEILLANCE REQUIREMENTS:

A summary of the results obtained as part of the required Interlaboratory Comparison Program shall be included in the Annual Radiological Environmental Operation Report pursuant to Reporting Requirement 5.2.

4.0 BASES

RADIOACTIVE LIQUID EFFLUENT MONITORING INSTRUMENTATION (2/3.1)

The radioactive liquid effluent instrumentation is provided to monitor and control, as applicable, the releases of radioactive materials in liquid effluents during actual or potential releases of liquid effluents. The alarm/trip setpoints for these instruments shall be calculated and adjusted in accordance with the methodology and parameters in the ODCM to ensure that the alarm/trip will occur prior to exceeding 10 times the EFFLUENT CONCENTRATION values specified in Appendix B, Table 2, Column 2 to 10 CFR 20. The OPERABILITY and use of this instrumentation is consistent with the requirements of General Design Criteria 60, 63 and 64 of Appendix A to 10 CFR Part 50. The purpose of tank level indicating devices is to assure the detection and control of leaks that if not controlled could potentially result in the transport of radioactive materials to UNRESTRICTED AREAS.

RADIOACTIVE GASEOUS EFFLUENT MONITORING INSTRUMENTATION (2/3.2)

The radioactive gaseous effluent instrumentation is provided to monitor and control, as applicable, the releases of radioactive materials in gaseous effluents during actual or potential releases of gaseous effluents. The alarm/trip setpoints for these instruments shall be calculated and adjusted in accordance with the methodology and parameters in the ODCM to ensure that the alarm/trip will occur prior to exceeding the limits of 10 CFR Part 20. The OPERABILITY and use of this instrumentation is consistent with the requirements of General Design Criteria 60, 63 and 64 of Appendix A to 10 CFR Part 50.

LIQUID EFFLUENTS CONCENTRATION (2/3.3.1)

This Control is provided to ensure that the concentration of radioactive materials released in liquid waste effluents to UNRESTRICTED AREAS will be less than 10 times the EFFLUENT CONCENTRATION values specified in Appendix B, Table 2, Column 2 to 10 CFR 20. The Control provides operational flexibility for releasing liquid effluents in concentrations to follow the Section II.A and II.C design objectives of Appendix I to 10 CFR Part 50. This limitation provides reasonable assurance that the levels of radioactive materials in bodies of water in UNRESTRICTED AREAS will result in exposures within (1) the Section II.A design objectives of Appendix I, 10 CFR Part 50, to a MEMBER OF THE PUBLIC and (2) the restrictions authorized by 10 CFR Part 20.1301(e). The concentration limit for the dissolved or entrained noble gases is based upon the assumption that Xe-135 is the controlling radionuclide and its EFFLUENT CONCENTRATION in air (submersion) was converted to an equivalent concentration in water. This control does not affect the requirement to comply with the annual limitations of 10 CFR Part 20.1301(a).

This Control applies to the release of radioactive materials in liquid effluents from all units at the site.

The required detection capabilities for radioactive materials in liquid waste samples are tabulated in terms of the lower limits of detection (LLDs). Detailed discussion of the LLD and other detection limits can be found in Currie, L.A., "Lower Limit of Detection: Definition and Elaboration of a Proposed Position for Radiological Effluent and Environmental Measurements," NUREG/CR-4007 (September 1984), and in the HASL Procedures Manual, HASL-300 (revised annually).

DOSE FROM LIQUID EFFLUENTS (2/3.3.2)

This Control is provided to implement the requirements of Sections II.A, III.A and IV.A of Appendix I, 10 CFR Part 50. The Control statement implements the guides set forth in Section II.A of Appendix I. The Action statements provide the required operating flexibility and at the same time implement the guides set forth in Section IV.A of Appendix I to assure that the releases of radioactive material in liquid effluents will be kept "as low as is reasonably achievable." Also, for fresh water sites with drinking water supplies that can be potentially affected by plant operations, there is reasonable assurance that the operation of the facility will not result in radionuclide concentrations in the finished drinking water that are in excess of the requirements of 40 CFR Part 141. The dose calculation methodology and parameters in the ODCM implement the requirements in Section III.A of Appendix I that conformance with the guides of Appendix I be shown by calculational procedures based on models and data, such that the actual exposure of a MEMBER OF THE PUBLIC through appropriate pathways is unlikely to be substantially underestimated. The equations specified in the ODCM for calculating the doses due to the actual release rates of radioactive materials in liquid effluents are consistent with the methodology provided in Regulatory Guide 1.109, "Calculation of Annual Doses to Man from Routine Releases of Reactor Effluents for the purpose of Evaluating Compliance with 10 CFR Part 50, Appendix I," Revision 1, October 1977 and Regulatory Guide 1.113, "Estimating Aquatic Dispersion of Effluents from Accidental and Routine Reactor Releases for the Purpose of Implementing Appendix I," April 1977.

This Control applies to the release of liquid effluents from each reactor at the site. For units with shared radwaste treatment systems, the liquid effluents from the shared system are proportioned among the units sharing that system.

LIQUID RADWASTE TREATMENT SYSTEM (2/3.3.3)

The requirement that the appropriate portions of this system be used, when specified, provides assurance that the releases of radioactive materials in liquid effluents will be kept "as low as is reasonably achievable". This Control implements the requirements of 10 CFR Part 50.36a, General Design Criterion 60 of Appendix A to 10 CFR Part 50 and the design objective given in Section II.D of Appendix I to 10 CFR part 50. The specified limits governing the use of appropriate portions of the liquid radwaste treatment system were specified as a suitable fraction of the dose design objectives set forth in Section II.A of Appendix I, 10 CFR Part 50, for liquid effluents.

This Control applies to the release of liquid effluents from each reactor at the site. For units with shared radwaste treatment systems, the liquid effluents from the shared system are proportioned among the units sharing that system.

GASEOUS EFFLUENTS DOSE RATE (2/3.4.1)

This Control provides reasonable assurance that radioactive material discharged in gaseous effluents will not result in the exposure of a MEMBER OF THE PUBLIC in an UNRESTRICTED AREA, either at or beyond the Site Boundary in excess of the design objectives of Appendix I to 10 CFR Part 50. This Control is provided to ensure that gaseous effluents from all units on the site will be appropriately controlled. It provides operational flexibility for releasing gaseous effluents to satisfy the Section II.A and II.C design objectives of Appendix I to 10 CFR Part 50. For MEMBERS OF THE PUBLIC who may at times be within the Site Boundary, the occupancy of that MEMBER OF THE PUBLIC will usually be sufficiently low to compensate for the reduced atmospheric dispersion of gaseous effluents relative to that for the Site Boundary. Examples of calculations for such MEMBERS OF THE PUBLIC, with the appropriate occupancy factors, shall be given in the ODCM. The specified release rate limits restrict, at all times, the corresponding dose rates above background to a MEMBER OF THE PUBLIC at or beyond the Site Boundary to less than or equal to 500 mrem/year to the total body or to less than or equal to 3000 mrem/year to the skin. These release rate limits also restrict, at all times, the corresponding thyroid dose rate above background to a child via the inhalation pathway to less than or equal to 1500 mrem/year. This Control does not affect the requirement to comply with the annual limitations of 10 CFR 20.1301(a).

This Control applies to the release of gaseous effluents from all units at the site.

DOSE FROM NOBLE GASES (2/3.4.2)

This Control is provided to implement the requirements of Sections II.B, III.A and IV.A of Appendix I, 10 CFR Part 50. The Control statements implement the guides set forth in Section II.B of Appendix I. The Action statements provide the required operating flexibility and at the same time implement the guides set forth in Section IV.A of Appendix I to assure that the releases of radioactive material in gaseous effluents will be kept "as low as is reasonably achievable." The Surveillance Requirements implement the requirements in Section III.A of Appendix I that conformance with the guides of Appendix I be shown by calculational procedures based on models and data such that the actual exposure of a MEMBER OF THE PUBLIC through appropriate pathways is unlikely to be substantially underestimated.

The dose calculation methodology and parameters established in the ODCM for calculating the doses due to the actual release rates of radioactive noble gases in gaseous effluents are consistent with the methodology provided in Regulatory Guide 1.109, "Calculation of Annual Doses to Man from Routine Releases of Reactor Effluents for the Purpose of Evaluating Compliance with 10 CFR Part 50, Appendix I," Revision 1, October 1977 and Regulatory Guide 1.111, "Methods for Estimating Atmospheric Transport and Dispersion of Gaseous Effluents in Routine Releases from Light-Water Cooled Reactors," Revision 1, July 1977. The ODCM equations provided for determining the air doses at and beyond the SITE BOUNDARY are based upon the historical average atmospheric conditions.

This Control applies to the release of gaseous effluents from each reactor at the site. For units with shared radwaste treatment systems, the gaseous effluents from the shared system are proportioned among the units sharing that system.

DOSE FROM IODINE-131, TRITIUM, AND RADIONUCLIDES IN PARTICULATE FORM (2/3.4.3)

This Control is provided to implement the requirements of Sections II.C, III.A and IV.A of Appendix I, 10 CFR Part 50. The Controls are the guides set forth in Section II.C of Appendix I. The Action statements provide the required operating flexibility and at the same time implement the guides set forth in Section IV.A of Appendix I to assure that the releases of radioactive materials in gaseous effluents will be kept "as low as is reasonably achievable." The ODCM calculational methods specified in the Surveillance Requirements implement the requirements in Section III.A of Appendix I that conformance with the guides of Appendix I be shown by calculational procedures based on models and data, such that the actual exposure of a MEMBER OF THE PUBLIC through appropriate pathways is unlikely to be substantially underestimated.

The ODCM calculational methodology and parameters for calculating the doses due to the actual release rates of the subject materials are consistent with the methodology provided in Regulatory Guide 1.109, "Calculation of Annual Doses to Man from Routine Releases of Reactor Effluents for the Purpose of Evaluating Compliance with 10 CFR Part 50, Appendix I," Revision 1, October 1977 and Regulatory Guide 1.111, "Methods for Estimating Atmospheric Transport and Dispersion of Gaseous Effluents in Routine Releases from Light-Water-Cooled Reactors," Revision 1, July 1977. These equations also provide for determining the actual doses based upon the historical average atmospheric conditions. The release rate Controls for iodine-131, tritium, and radionuclides in particulate form with half lives greater than 8 days are dependent upon the existing radionuclide pathways to man, in the areas at and beyond the SITE BOUNDARY. The pathways that were examined in the development of these calculations were: 1) individual inhalation of airborne radionuclides, 2) deposition of radionuclides onto green leafy vegetation with subsequent consumption by man, 3) deposition onto grassy areas where milk animals and meat producing animals graze with consumption of the milk and meat by man, and 4) deposition on the ground with subsequent exposure of man.

This Control applies to the release of gaseous effluents from each reactor at the site. For units with shared radwaste treatment systems, the gaseous effluents from the shared systems are proportioned among the units sharing that system.

GASEOUS RADWASTE TREATMENT SYSTEM (2/3.4.4)

The requirement that the appropriate portions of these systems be used, when specified, provides reasonable assurance that the release of radioactive materials in gaseous effluents will be kept "as low as is reasonably achievable." This Control implements the requirements of 10 CFR Part 50.36a, General Design Criterion 60 of Appendix A to 10 CFR Part 50, and the design objectives given in Section II.D of Appendix I to 10 CFR Part 50.

The specified limits governing the use of appropriate portions of the systems were specified as a suitable fraction of the dose design objectives set forth in Sections II.B and II.C of Appendix I, 10 CFR Part 50, for gaseous effluents.

This Control applies to the release of gaseous effluents from each reactor at the site. For units with shared radwaste treatment systems, the gaseous effluents from the shared systems are proportioned among the units sharing that system.

TOTAL DOSE (2/3.6)

This Control is provided to meet the dose limitations of 40 CFR Part 190 that have been incorporated into 10 CFR Part 20.1301(d). The Control requires the preparation and submittal of a Special Report whenever the calculated doses due to releases of radioactivity and to radiation from uranium fuel cycle sources exceed 25 mrems to the total body or any organ, except the thyroid, which shall be limited to less than or equal to 75 mrems.

For sites containing up to 4 reactors, it is highly unlikely that the resultant dose to a MEMBER OF THE PUBLIC will exceed the dose limits of 40 CFR Part 190 if the individual reactors remain within twice the dose design objectives of Appendix I, and if direct radiation doses from the reactor units and outside storage tanks are kept small. The Special Report will describe a course of action that should result in the limitation of the annual dose to a MEMBER OF THE PUBLIC to within the 40 CFR Part 190 limits. For the purposes of the Special Report, it may be assumed that the dose commitment to the MEMBER OF THE PUBLIC from other uranium fuel cycle sources is negligible, with the exception that dose contributions from other nuclear fuel cycle facilities at the same site or within a radius of 8 km must be considered. If the dose to any MEMBER OF THE PUBLIC is estimated to exceed the requirements of 40 CFR Part 190, submittal of the Special Report within 30 days with a request for a variance (provided the release conditions resulting in violation of 40 CFR Part 190 have not already been corrected), in accordance with the provisions of 40 CFR Part 190.11 and 10 CFR Part 20.2203(a)(4), is considered to be a timely request and fulfills the requirements of 40 CFR Part 190 until NRC staff action is completed. The variance only relates to the limits of 40 CFR Part 190, and does not apply in any way to the other requirements for dose limitation of 10 CFR Parts 20, as addressed in Controls 2.3.1 and 2.4.1. An individual is not considered a MEMBER OF THE PUBLIC during any period in which he/she is engaged in carrying out any operation that is part of the nuclear fuel cycle.

Demonstration of compliance with the limits of 40 CFR Part 190 or with the design objectives of Appendix I to 10 CFR Part 50 will be considered to demonstrate compliance with the 0.1 rem limit of 10 CFR Part 20.1301.

RADIOLOGICAL ENVIRONMENTAL MONITORING PROGRAM (2/3.7)

The Radiological Environmental Monitoring Program required by this Control provides representative measurements of radiation and of radioactive materials in those exposure pathways and for those radionuclides that lead to the highest potential radiation exposures of MEMBERS OF THE PUBLIC resulting from the station operation.

This monitoring program implements Section IV.B.2 of Appendix I to 10 CFR Part 50 and thereby supplements the Radiological Effluent Monitoring Program by verifying that the measurable concentrations of radioactive materials and levels of radiation are not higher than expected on the basis of the effluent measurements and the modeling of the environmental exposure pathways. Program changes may be initiated based on operational experience.

The required detection capabilities for environmental sample analyses are tabulated in terms of the lower limits of detection (LLDs). The LLDs required by Table 3.7-1 are considered optimum for routine environmental measurements in industrial laboratories. It should be recognized that the LLD is defined as an a priori (before the fact) limit representing the capability of a measurement system and not as an a posteriori (after the fact) limit for a particular measurement.

LAND USE CENSUS (2/3.8)

This Control is provided to ensure that changes in the use of areas at and beyond the SITE BOUNDARY are identified and that modifications to the Radiological Environmental Monitoring Program are made if required by the results of this census. The best information from the door-to-door survey, from aerial survey or from consulting with local agricultural authorities shall be used. This census satisfies the requirements of Section IV.B.3 of Appendix I to 10 CFR Part 50. Restricting the census to gardens of greater than 50 m^2 provides assurance that significant exposure pathways via leafy vegetables will be identified and monitored since a garden of this size is the minimum required to produce the quantity (26 kg/year) of leafy vegetables assumed in Regulatory Guide 1.109 for consumption by a child. To determine this minimum garden size, the following assumptions were made: 1) 20% of the garden was used for growing broad leaf vegetation (i.e., similar to lettuce and cabbage), and 2) a vegetation yield of 2 kg/m^2.

INTERLABORATORY COMPARISON PROGRAM (2/3.9)

The requirement for participation in an approved Interlaboratory Comparison Program is provided to ensure that independent checks on the precision and accuracy of the measurements of radioactive material in environmental sample matrices are performed as part of the quality assurance program for environmental monitoring in order to demonstrate that the results are reasonably valid for the purposes of Section IV.B.2 of Appendix I to 10 CFR Part 50.

5.0 REPORTING REQUIREMENTS

5.1 ANNUAL RADIOACTIVE EFFLUENT RELEASE REPORT

A Radioactive Effluent Release Report covering the operation of the unit during the previous year shall be submitted prior to May 1 of each year. A single submittal may be made for a multiple unit station. The submittal should combine those sections that are common to all units at the station; however, for units with separate radwaste systems, the submittal shall specify the releases of radioactive material from each unit.

The Annual Radioactive Effluent Release Report shall include the following information:

- A summary of the quantities of radioactive liquid and gaseous effluents and solid waste released from the unit as outlined in Regulatory Guide 1.21, "Measuring, Evaluating, and Reporting Radioactivity in Solid Wastes and Releases of Radioactive Materials in Liquid and Gaseous Effluents from Light-Water-Cooled Nuclear Power Plants," Revision 1, June 1974, with data summarized on a quarterly basis following the format of Appendix B thereof or as modified in the REC.

- For solid wastes, the following information for each class of solid waste (as defined by 10 CFR Part 61) shipped offsite during the report period will be presented in tabular form similar to that of Table 3 of Regulatory Guide 1.21.

  a. Container volume,

  b. Total curie quantity (specify whether determined by measurement or estimate),

  c. Principal radionuclides (specify whether determined by measurement or estimate,

  d. Source of waste and processing employed (e.g., dewatered spent resin, compacted dry waste, evaporator bottoms),

  e. Type of container (e.g., LSA, Type A, Type B, Large Quantity), and

  f. Solidification agent or absorbent (e.g., cement, urea formaldehyde).

- An annual summary of hourly meteorological data collected over the previous year. This annual summary may be either in the form of an hour-by-hour listing on magnetic tape of wind speed, wind direction, atmospheric stability, and precipitation (if measured), or in the form of joint frequency distributions of wind speed, wind direction, and atmospheric stability. In lieu of submission with the Radioactive Effluent Release Report, the licensee has the option of retaining this summary of required meteorological data on site in a file that shall be provided to the NRC upon request.

- An assessment of the radiation doses due to the radioactive liquid and gaseous effluents released from the unit or station during the previous calendar year.

- An assessment of the radiation doses from radioactive liquid and gaseous effluents to MEMBERS OF THE PUBLIC due to their activities inside the SITE BOUNDARY during the report period. All assumptions used in making these assessments, i.e., specific activity, exposure time and location, shall be included in the report.

  Approximate and conservative approximate methods for determining the meteorological conditions shall be used for determining gaseous pathway doses. The assessment of radiation doses shall be performed in accordance with the methodology and parameters in the OFFSITE DOSE CALCULATION MANUAL (ODCM).

- An assessment of radiation doses to the likely most exposed MEMBER OF THE PUBLIC from reactor releases and other nearby uranium fuel cycle sources, when required by Sections 2.6 and 3.6, including doses from primary effluent pathways and direct radiation, for the previous calendar year to show conformance with 40 CFR Part 190, "Environmental Radiation Protection Standards for Nuclear Power Operation."

  Acceptable methods for calculating the dose contribution from liquid and gaseous effluents are given in Regulatory Guide 1.109 Rev. 1, October, 1977.

- A list and description of unplanned releases from the site to UNRESTRICTED AREAS of radioactive materials in gaseous and liquid effluents made during the reporting period.

- Pursuant to Controls 2.1 and 2.2, an explanation as to why the inoperability of liquid or gaseous effluent monitoring instrumentation was not corrected within the time specified.

- Pursuant to Controls 2.1 and 2.2, a discussion of all deviations from the provisions of these Controls.

- Pursuant to Control 2.7 and Table 2.7-1, Notation (a), identify the causes of the unavailability of samples for pathway analysis and identify the new locations for obtaining replacement samples. Include revised figure(s) and table for the ODCM reflecting the new locations.

- Pursuant to Table 3.3.1-1, Notation (c) and Table 3.4.1-1, Notation (b), a discussion of identifiable gamma peaks, including those of nuclides specified in Tables 3.3.1-1 and 3.4.1-1.

- Pursuant to Control 2.8, a listing of new location(s) for dose calculations and/or environmental monitoring identified by the land use census. Include revised figure(s) and table for the ODCM reflecting the new location(s).

- Pursuant to Appendix B Technical Specifications 1.2.1 and 1.3.2, a description of the events leading to liquid holdup tanks or gas storage tanks exceeding the Control limits.

- Pursuant to Appendix B Technical Specification 4.3.3, a discussion of the major changes to radioactive liquid, gaseous, and solid waste treatment systems.

- Pursuant to Appendix B Technical Specifications 4.5.2 and 4.6.2, any changes made during the reporting period to the PROCESS CONTROL PROGRAM (PCP) and to the OFFSITE DOSE CALCULATION MANUAL (ODCM), respectively.

5.2 ANNUAL RADIOLOGICAL ENVIRONMENTAL OPERATING REPORT

An annual Radiological Environmental Operating Report covering the operation of the unit during the previous calendar year shall be submitted prior to May 1 of each year. A single submittal may be made for a multiple unit station.

The Annual Radiological Environmental Operating Report shall include:

- Summaries, interpretations, and an analysis of trends of the results of the Radiological Environmental Monitoring Program for the report period, including a comparison, as appropriate, with preoperational studies, with operational controls, and with previous environmental surveillance reports, and an assessment of the observed impacts of the plant operation on the environment.

- The results of analysis of all radiological environmental samples and of all environmental radiation measurements taken during the period pursuant to the locations specified in the tables and figures in the ODCM, as well as summarized and tabulated results of these analyses and measurements in the format of the table in the Radiological Assessment Branch Technical Position, Revision 1, Novemb 1979. In the event that some individual results are not available for inclusion with the report, the report shall be submitted noting and explaining the reasons for the missing results. The missing data shall be submitted as soon as possible in a supplementary report.

- A summary description of the Radiological Environmental Monitoring Program.

- At least two legible maps covering all sampling locations keyed to a table giving distances and directions from the centerline of one reactor. One map shall cover stations near the site boundary and the second shall include the more distant stations.

- A discussion of the reasons for not conducting the Radiological Environmental Monitoring Program as specified by Control 2.7 and the plans for preventing recurrence.

- Pursuant to Control 2.7, a discussion of environmental sample measurements that exceed the reporting levels of Table 2.7-2 but are not the result of plant effluents.

- Pursuant to Table 2.7-1, Notation (a), a discussion of all deviations from the sampling schedule of Table 2.7-1.

- Pursuant to Table 3.7-1, Notation (c), a discussion of the contributing factors for cases in which the LLD required by Table 3.7-1 was not achievable.

- Pursuant to Table 3.7-1, Notation (a), a discussion of identifiable nuclide peaks, including those of nuclides specified in Table 3.7-1.

- Pursuant to Control 3.8, the results of the land use census.

- Pursuant to Control 2.9, the corrective actions taken to prevent a recurrence if the Interlaboratory Comparison Program is not being performed as required.

- Pursuant to Control 3.9, the results of licensee participation in the Interlaboratory Comparison Program.

5.3 SPECIAL REPORTS

In lieu of a Licensee Event Report (LER), the following special reports must be generated within 30 days:

- Pursuant to Control 2.3.2, identify the cause(s) for exceeding the specified limits for dose or dose commitment to a MEMBER OF THE PUBLIC from the release of radioactive materials in liquid effluents to UNRESTRICTED AREAS. Define the corrective action(s) taken to reduce the releases and the proposed corrective action(s) to be taken to assure subsequent releases will be in compliance with limits. Include the results of radiological analyses of the drinking water source and the radiological impact on finished drinking water supplies with regard to the requirements of 40 CFR Part 141.

- Pursuant to Control 2.3.3, explain why liquid radwaste was discharged without treatment and identify any inoperable liquid radwaste treatment system equipment or subsystems and the reason for the inoperability. Include the action(s) taken to restore the inoperable equipment to OPERABLE status and a summary description of the action(s) taken to prevent a recurrence.

- Pursuant to Control 2.4.2, identify the cause(s) for exceeding the specified limit(s) for the air dose due to radioactive noble gases released in gaseous effluents. Define the corrective actions taken to reduce the releases and define the proposed corrective actions to be taken to assure subsequent releases will be in compliance with limits specified in the Control.

- Pursuant to Control 2.4.3, identify the cause(s) for exceeding the specified limits for the dose to a MEMBER OF THE PUBLIC from the release of iodine-131, tritium, and radionuclides in particulate form with half lives greater than 8 days in gaseous effluents. Define the corrective actions taken to reduce the releases and define the proposed corrective actions to be taken to assure subsequent releases will be in compliance with limits specified in the Control.

- Pursuant to Control 2.4.4, explain why gaseous radwaste was discharged without treatment and identify inoperable gaseous radwaste treatment system equipment or subsystems and the reason for the inoperability. Include the action(s) taken to restore the inoperable equipment to OPERABLE status and a summary description of the action(s) taken to prevent a recurrence.

- Pursuant to Control 2.6 and 10 CFR Part 20.2203(a)(4), define the corrective action to be taken to reduce subsequent releases to prevent recurrence of exceeding the specified total dose limits. Include a schedule for achieving conformance with the limits and describe the course of action that should result in the limitation of the annual dose to a MEMBER OF THE PUBLIC to within the 40 CFR Part 190 limits. Include an analysis that estimates the radiation exposure (dose) to a MEMBER OF THE PUBLIC from uranium fuel cycle sources, including all effluent pathways and direct radiation, for the calendar year that includes the releases covered by this report. Also describe the levels of radiation and the concentrations of radioactive material involved as well as the cause of the exposure levels or concentrations. Include a request, if required by the provisions of the Control, for a variance in accordance with the provisions of 40 CFR Part 190.

- Pursuant to Control 2.7, identify the cause(s) for exceeding the reporting levels of Table 2.7-2 and define the corrective actions to be taken to reduce radioactive effluents so that the potential annual dose to a MEMBER OF THE PUBLIC is less than the calendar year limits of Controls 2.3.2, 2.4.2, and 2.4.3. Report when more than one radionuclide in Table 2.7-2 is detected <u>and</u>

$$\frac{\text{Concentration (1)}}{\text{Reporting Level (1)}} + \frac{\text{Concentration (2)}}{\text{Reporting Level (2)}} + \ldots \geq 1.0$$

Report when radionuclides other than those in Table 2.7-2 are detected <u>and</u> are the result of plant effluents <u>and</u> the potential annual dose to a MEMBER OF THE PUBLIC is equal to or greater than the calendar year limits of Controls 2.3.2, 2.4.2, and 2.4.3.

1.0 INSTRUMENTATION AND SYSTEMS

1.1 Effluent Monitoring System Description

Effluent monitor information is provided in Table 1-1, including an indication of which monitors use effluent setpoints. Figures 2-1 and 3-1 show a schematic of the possible radioactive release points which monitor locations for gaseous and liquid pathways, respectively.

1.2 Setpoints

This section provides equations and methodology used for each alarm and trip setpoint on each effluent release point according to Radiological Effluent Controls 2.1 and 2.2.

1.2.1 Setpoints for Gaseous Effluent Monitors

Setpoints for gaseous monitors are based on the permissible discharge rate as calculated in Section 3 of the ODCM. The most restrictive setpoints (based on annual average dose limit) are used whenever practical. Higher release rates may be authorized with the proper concurrence, as delineated in Section 3.1.8. The methodology identified in Section 3, along with an isotopic mix described in Table 3.8, are used to generate the following noble gas discharge rates (normally utilized for alarm setpoints):

Permissible Discharge Rate (uCi/sec)

Basis of Limit		Iodine/Particulate*	Noble Gases
Annual Average	**	1.04E-2	3.08E+3
Quarterly Average	**	2.08E-2	6.15E+3
Instantaneous	***	1.20E+1	3.81E+4

* Half-lives greater than 8 days.

** These limits are not part of Radiological Effluent Control 2.4.1, but are included for information, as these limits are used for operational control of releases.

*** From Radiological Effluent Control 2.4.1

1.2.1.1 The Plant Vent Wide Range Gas Monitor (R-27) reads and alarms directly in uCi/sec, hence, the alarm setpoints are set directly in uCi/sec.

1.2.1.2 If the monitor reads and alarms in uCi/cc, the alarm set point is calculated as follows:

$$S = D / [(F) * (4.72E+2)]$$

where: S = Alarm setpoint in uci/cc

D = Permissible discharge rate in uCi/sec

F = Vent duct flow in ft^3/min

4.72E+2 = conversion factor (28317 cc·min/ft^3·60sec)

1.2.1.3 If the monitor reads and alarms in cpm then the alarm setpoint is calculated as follows:

$$S = D / [(F) * (4.72E+2) * (CF)]$$

where: S, D, F, and 4.72E+2 are as defined above, and

CF = Calibration factor in uCi/cc per net cpm

1.2.1.4 Normally, maximum allowable limits are calculated using a standard nuclide mix. However, setpoints may be determined based on the actual mix, on a case by case basis. This method is usually performed when the instantaneous release rate is applied.

1.2.1.5 During normal operation, the Unit 3 main plant vent is the only significant release point (>99% total). If another release point becomes significant, its permissible release rate should be apportioned with the Plant Vent's to ensure the total discharge rate for all release points remains less than the maximum permissible discharge rate.

1.2.2 <u>Setpoints for Liquid Effluent Monitors</u>

1.2.2.1 Liquid Effluent Monitors have setpoints based on limiting the concentrations in the discharge canal to the levels listed in 10 CFR 20 Appendix B, Table 2, Column 2.

1.2.2.2 For monitors that read and alarm in uCi/ml, such as the liquid waste disposal monitor (R-18), the service water monitors (R-16 A and B and R-23), and the steam generator blowdown monitor (R-19) the alarm setpoint is calculated as follows:

$$S = [(ADC)\ (F)]/[f] = \text{Alarm setpoint in uCi/ml}$$

where:

F = Available discharge canal dilution flow for this release in gal/min

f = calculated allowable release rate in gal/min (see section 2.2.6)

ADC = Allowed diluted concentration is the equivalent MPCW for gamma emitting isotopes weighted for total specific activity (beta and gamma emitters). This parameter is further clarified in section 2.2.

NOTE: The gamma equivalent MPCW or ADC must be used due to the insensitivity of the radiation monitor to beta emitters and the time necessary to analyze liquid releases for these beta emitters.

1.2.2.3 Alert setpoints should be used on batch liquid release monitors to ensure the contents of the batch tank have not changed since sampling. The alert setpoint is calculated as follows:

$$AS = (C)\ (1.25)$$

where:

AS = Alert setpoint in uCi/ml

C = Average monitor reading at time of sample

1.25 = A conservative factor based upon the mixing ratio of two tank volumes and an expected monitor response tolerance.

NOTE: Liquid Monitor alert setpoints do not control any auto functions but simply provide indication to the operators.

Figure 1-1

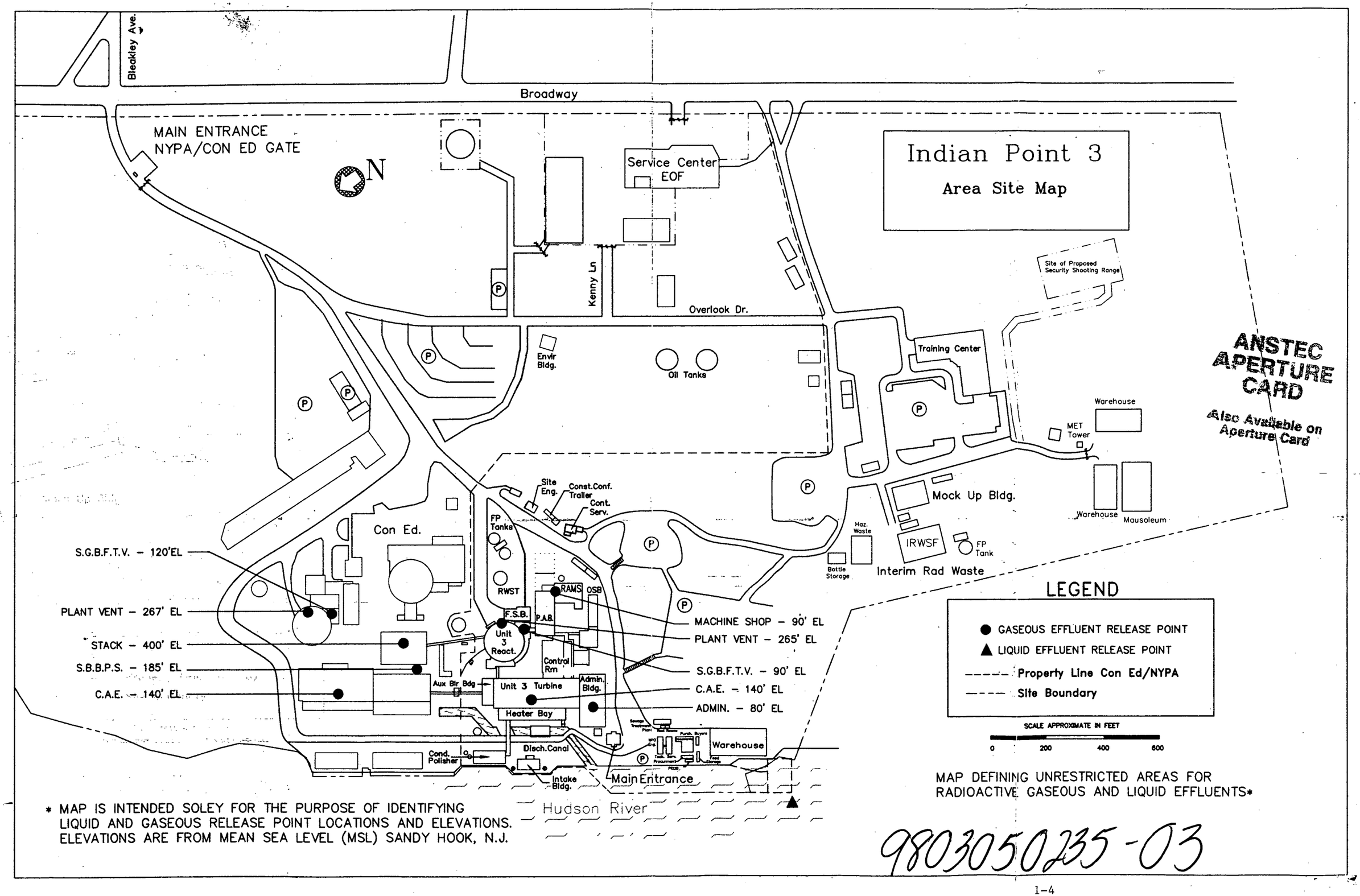
Indian Point 3
Area Site Map
Bleakley Ave.
Broadway
MAIN ENTRANCE
NYPA/CON ED GATE
N
Service Center
EOF
Kenny Ln
Overlook Dr.
Site of Proposed Security Shooting Range
Training Center
Envir Bldg.
Oil Tanks
Warehouse
MET Tower
Mock Up Bldg.
Warehouse
Mausoleum
Haz. Waste
IRWSF
FP Tank
Bottle Storage
Interim Rad Waste
Site Eng.
Const.Conf. Trailer
Cont. Serv.
FP Tanks
Con Ed.
RWST
RAMS
OSB
F.S.B.
P.A.B.
Unit 3 React.
Control Rm
Aux Bir Bldg
Unit 3 Turbine
Admin. Bldg.
Heater Bay
Disch.Canal
Cond. Polisher
Intake Bldg.
Main Entrance
Warehouse
Hudson River
S.G.B.F.T.V. – 120'EL
PLANT VENT – 267' EL
STACK – 400' EL
S.B.B.P.S. – 185' EL
C.A.E. – 140' EL
MACHINE SHOP – 90' EL
PLANT VENT – 265' EL
S.G.B.F.T.V. – 90' EL
C.A.E. – 140' EL
ADMIN. – 80' EL
LEGEND
GASEOUS EFFLUENT RELEASE POINT
LIQUID EFFLUENT RELEASE POINT
Property Line Con Ed/NYPA
Site Boundary
SCALE APPROXIMATE IN FEET
0
200
400
600
MAP DEFINING UNRESTRICTED AREAS FOR RADIOACTIVE GASEOUS AND LIQUID EFFLUENTS*
* MAP IS INTENDED SOLEY FOR THE PURPOSE OF IDENTIFYING LIQUID AND GASEOUS RELEASE POINT LOCATIONS AND ELEVATIONS. ELEVATIONS ARE FROM MEAN SEA LEVEL (MSL) SANDY HOOK, N.J.
ANSTEC APERTURE CARD
Also Available on Aperture Card
9803050235-03

APPENDIX B

DETECTION CAPABILITIES

The LLD is the smallest concentration of radioactive material in a sample that will be detected with 95% probability with 5% probability of falsely concluding that a blank observation represents a "real" signal.

For a particular measurement system (which may include radiochemical separation):

$$LLD = \frac{\frac{2.71}{T_s} + 3.29 s_b \cdot \sqrt{1 + (\frac{T_b}{T_s})}}{E \cdot V \cdot k \cdot Y \cdot e^{-\lambda t}}$$

Where:

LLD = The lower limit of detection as defined above (as picocurie per unit mass or volume).

T_s = The sample counting time in minutes.

s_b = The standard deviation of the background counting rate or of the counting rate of a blank sample as appropriate (as counts per minute).

T_b = The background count time in minutes.

E = The counting efficiency (as counts per transformation).

V = The sample size (in units of mass or volume).

k = A constant for the number of transformations per minute per unit of activity (normally, 3.7E+4 dps per uCi).

Y = The fractional radiochemical yield (when applicable).

λ = The radioactive decay constant for the particular radionuclide.

t = The elapsed time between midpoint of sample collection and time of counting.

Note: The above LLD formula accounts for differing background and sample count times. The IP3 Radiological Environmental Monitoring Program, REMP, uses an LLD formula that assumes equal background and sample count times, in accordance with Radiological Effluent Controls. When the above LLD formula is more appropriate for the effluents program, it may be used.

The constants 2.71 and 3.29 and the general LLD equation were derived from the following two sources:

1) Currie, L.A. "Limits for Qualitative Detection of Quantitative Determination". (Anal. Chem. 40:586-593, 1968); and,

2) Mayer, Dauer "Application of Systematic Error Bounds to Detection Limits for Practical Counting". (HP Journal 65(1): 89-91, 1993)

The value of s_b used in the calculation of the LLD for a detection system shall be based on the actual observed variance of the background counting rate or of the counting rate of the blank samples (as appropriate) rather than on an unverified theoretically predicted variance. In calculating the LLD for a radionuclide determined by gamma ray spectrometry, the background shall include the typical contributions of other radionuclides normally present in the samples. Typical values of E, V, Y, and t shall be used in the calculation. The background count rate is calculated from the background counts that are determined to be within ± one FWHM (Full-Width-at-Half-Maximum) energy band about the energy of the gamma ray peak used for the quantitative analysis for that radionuclide.

It should be recognized that the LLD is defined as an a priori (before the fact) limit representing the capability of a measurement system and not as an a posteriori (after the fact) limit for a particular measurement.

To handle the a posteriori problem, a decision level must be defined. The remainder of Appendix B discusses the use of the Critical Level concept. Following an experimental observation, one must decide whether or not a real signal was, in fact, detected. This type of binary qualitative decision is subject to two kinds of error: deciding that the radioactive material is present when it is not (a: Type I error), and the converse, failing to decide that it is present when it is (b: Type II error). The maximum acceptable Type I error (a), together with the standard deviation, S_{net}, of the net signal when the net signal equals zero, establish the Critical Level, L_c, upon which decisions may be based.

Operationally, an observed signal, S, must exceed L_c to yield the decision, detected.

$$L_c = k_a s_b (1+T_b/T_s)^{0.5}$$

Where:

k_a is related to the standardized normal distribution and corresponds to a probability level of 1-a. For instance, selection of a = 0.01 corresponds to a 99% confidence level that activity is present. When determining the L_c for different measurement processes, it is allowable to set a at less than or equal to 0.05 as long as the following condition is met:

To set a for L_c determination at less than 0.05, the equation for the LLD (which places a less than or equal to 0.05) should be employed to verify that the calculated LLD is less than or equal to the LLDs specified in the IP-3 RECS. This calculation, if necessary, will be performed on a case by case basis.

TABLE 1-1

EFFLUENT MONITORING SYSTEM DATA

CHANNEL	MONITOR DESCRIPTION	SAMPLING LOCATIONS	RANGE	EFFLUENT CONTROL FUNCTIONS	ALARM SETPOINT USED*
R-12 G	Containment Gas Monitor	Samples drawn from 32 and 35 Containment Fan Coolers	1E-7 to 1E-1 uCi/cc	Containment Ventilation Isolation	YES
R-14** G	Plant Vent Radiogas Monitor	In plant vent at approximately 105' elevation	1E+1 to 1E+6 cpm (typically 1E-6 to 1E-3 uCi/cc)	Secures waste gas tank release and Containment Ventilation Isolation	YES
R-15 G	Condenser Air Ejector Monitor	In-line detector on the air ejector exhaust header	1E-6 to 1E+0 uCi/cc	On alarm diverts air ejector flow to VC, steam to condenser priming air ejector stopped and steam to reheater secured	YES
R-20 G	Waste Gas Disposal System Monitor	Adjacent to line monitor on suction to waste gas compressors	1E-2 to 1E+3 uCi/cc	None	YES***
R-27** G	Plant Vent Wide-Range Monitor	Sample drawn from inside plant vent	1E-7 to 1E+5 uCi/cc	Secure waste gas tank release and Containment Ventilation Isolation	YES
R-46 G	Administration Building Vent Radiogas Monitor	4th Floor Administration Building Monitor Exhaust Plenum for Controlled Areas	1E+1 to 1E+6 cpm (typically 5E-8 to 5E-2 uCi/cc)	None	YES
R-59 G	RAMS Building Vent Radiogas Monitor	55' RAMS Building Monitor Exhaust Plenum	1E-6 to 1E+2 uCi/cc	None	YES

TABLE 1-1

EFFLUENT MONITORING SYSTEM DATA

CHANNEL	MONITOR DESCRIPTION	SAMPLING LOCATIONS	RANGE	CONTROL FUNCTIONS	ALARM SETPOINT USED*
R-16 A/B L	Fan Cooler And Motor Cooler Service Water Return	Adjacent to service water return line from V.C. fan cooler units and motor coolers	1E-7 to 1E-1 uCi/ml	None	YES
R-23 L	Component Cooling Heat Exchanger Service Water Monitor	Adjacent to line monitor mounted on service water return line from component cooling heat exchanger	1E-7 to 1E-1 uCi/ml	None	YES
R-18 L	Waste Disposal Liquid Effluent Monitor	in line monitor on monitor tank recirc pump discharge	1E-7 to 1E-1 uCi/ml	Terminate Monitor Tank release on alarm	YES
R-19 L	S/G Blowdown Monitor	PAB blowdown room monitors steam generator blowdown	1E-6 to 1E+2 uCi/ml	Closes blowdown isolation valves and SG sample valves	YES
R-61 L	CPF Regen Waste Release Monitor	Monitor recirc of HTDS and LTDS tanks in condensate polisher. (used when primary to secondary leakage exists)	1E-7 to 1E-1 uCi/ml	Terminates TDS tank release	YES (when P-S leak exists)

* Alarm setpoint used for effluent considerations
** If available, (R-14 or R-27 must be operating).
*** Ensures 50000 Ci limit on gas decay tanks is not exceeded.

G = Gaseous
L = Liquid

2.0 LIQUID EFFLUENTS

2.1 Liquid Effluent Releases - General Information

2.1.1 The surveillance and lower limit of detection requirements for liquid radioactive effluents are contained in Section 3.3.1 of the Radiological Effluent Controls (RECS). Lower limit of detection calculations are listed in Appendix B.

2.1.2 A completed and properly authorized Liquid Radioactive Waste Permit should be issued prior to the release of any radioactive waste from an isolated tank to the discharge canal. A permit is required for each radioactive tank to be discharged.

2.1.3 All activity determinations for liquid radioactive effluents will be performed in such a manner as to be representative of the activity released to the river.

2.1.4 The radioactivity in liquid waste tanks shall be continuously monitored during release except as allowed by 3.1 Section 2.1 of the RECS. If the flowmeter is inoperable, the flow shall be estimated every four hours by difference in tank level or by discharge pump curves.

2.1.5 Prior to discharge, the radioactive waste tank contents shall be recirculated for at least two tank volumes. After this recirculation, and prior to discharge, a sample shall be taken and analyzed for activity with a portion of the sample set aside for composite analysis. The measured activity shall be used for calculating allowable discharge rate and the alarm setpoint for the liquid waste discharge monitor.

2.1.6 Radioactive releases of steam generator blowdown during primary-secondary leaks when released to the river should be documented on Liquid Radioactive Waste Release Permits using data supplied by the Chemistry Technician.

2.1.7 Assurance that combined liquid releases from Units 2 and 3 do not exceed Section 2.3 requirement of the RECS limits for the site are provided by administrative controls. These administrative controls are agreed to in the Memorandum of Understanding (#15) between Con Edison and the New York Power Authority concerning liquid discharge and the requirements of this document.

2.1.8 The dilution flow from Unit No. 3 should be used for calculating discharge canal concentrations during the discharge. However, by agreement with Con Edison's IP2NPP Watch Supervisor and the New York Power Authority's IP3NPP Watch Supervisor, one party can reduce or eliminate radioactive liquid waste discharge for a period of time to allow the other party to use the full site dilution flow, or a specified portion thereof, for a discharge when necessary. For time average dose calculations, allocation of dilution flow for the time period are apportioned between Unit 3 and Unit 2 per Memorandum of Understanding (#15).

2.1.9 Steam Generator Blowdown activity is determined by samples taken at least three times per week. This frequency is required by Table 4.1-2 Item 6 of Appendix A of the station's operating license. These "grab" samples of the steam generators are collected in a manner to be proportional to the rate of flow of individual steam generator to total steam generator blowdown. These samples are then analyzed for the various radionuclides at the frequencies specified in Table 3.3.1-1 of the RECS. (Further flow proportional composites are made where appropr[illegible].) (Ref: NUREG 0472, REV. 3, DRAFT 6, TABLE 4.11-1.)

2.1.10 The discharge canal flow rate is determined by the use of pump flow characteristics curves. The normal flow for condenser cooling pumps is 140,000 gpm when operating at maximum speed. During the cold weather months, the condenser cooling pumps are operating at reduced speed. This reduced flow is nominally 64,000 gpm (Ref: NUREG 0472, REV. 3, DRAFT 6, TABLE 3.3-12).

2.1.11 Radioactivity content in outdoor tanks is to be limited to less than 10 curies, excluding tritium and noble gas, as per section 1.2.1, Appendix B of the Technical Specifications. Compliance with this requirement is demonstrated by limiting the radioactive concentration in these tanks to the value which results in 10 curies when the tank is at full liquid capacity, except as modified below. The radioactive concentration limits for these tanks are:

RWST: $\frac{10 \text{ curies} \times 10^6 \ \mu\text{Ci/curie}}{358{,}500 \text{ gals} \times 3785 \text{ ml/gal}} = 7.3 \times 10^{-3} \ \mu\text{Ci/ml}$

PWST: $\frac{10 \text{ curies} \times 10^6 \ \mu\text{Ci/curie}}{165{,}000 \text{ gals} \times 3785 \text{ ml/gal}} = 1.6 \times 10^{-2} \ \mu\text{Ci/ml}$

31 & 32 MT:

$$\frac{10 \text{ curies} \times 10^6 \ \mu\text{Ci/curie}}{11{,}750 \text{ gals} \times 3785 \text{ ml/gal}} = 2.2 \times 10^{-1} \ \mu\text{Ci/ml}$$

Outside Temporary Tanks:

$$\frac{10 \text{ curies} \times 10^6 \ \mu\text{Ci/curie}}{\text{Volume in gals} \times 3785 \text{ ml/gal}} = \mu\text{Ci/ml}$$

The refueling water storage tank has the potential to be filled from the reactor cavity with liquid which exceeds the limits stated. Therefore, prior to filling the RWST from the reactor cavity after refueling operations, the reactor cavity (or residual heat removal system) must be sampled for radioactivity and action taken to ensure that the total activity in the tank does not exceed 10 curies.

Outside temporary tanks should not be filled with liquid which could exceed the concentration limit calculated. Therefore, prior to transfer to outside tanks, the source of liquid shall be sampled for radioactivity. If it exceeds the concentration limit calculated, action shall be taken to ensure that the total activity in the tank does not exceed 10 curies (Ref: NUREG 0472, REV. 3, DRAFT 6, TABLE 3.11.1.4).

2.1.12 There are no continuous composite samples for steam generator blowdown. The method of determining release concentrations is indicated below:

Individual blowdown flow rate to the river (by flowmeter or by flow curves) multiplied by sample blowdown concentration equals composite activity being released. In addition, R-19 monitors the composite steam generator blowdown released (Ref: NUREG 0472, REV. 3, DRAFT 6, TABLE 3.3-12).

2.1.13 The service water radioactivity monitor listed in Table 2.1-1 of the RECS is defined as the process radiation monitors which monitor components discharging into or are cooled by the service water system. These process radiation monitors are:

R-16 A or B:	Fan Cooler and Motor Cooler unit service water return monitors
R-23:	Component cooling service water return
R-18:	Liquid release monitor (separate release point)
R-19:	Steam generator blowdown radioactivity monitor (separate release point)

If all monitors on the effected release path are taken out of service and the removal of that monitor from service is not specifically addressed in the Radiological Environmental Controls, samples shall be taken every 12 hours or releases may not continue via this pathway. Samples may be taken on the affected monitored stream or on the service water system (Ref: NUREG 0472, REV. 3, DRAFT 6, TABLE 3.3-12).

2.1.14 Liquid effluent concentrations are limited to 10CFR20 limits. The total dose per quarter and per year must be within the limitations of 2.3.2 of the RECS (Ref: NUREG 0472, REV. 3, DRAFT 6, TABLE 3.11.1.1).

2.1.15 There are no drinking water intakes within 3 miles of the site on the Hudson River (see Section 2.4.1 for further details) (Ref: NUREG 0472, REV. 3, DRAFT 6, TABLE 3.11.1.2).

2.1.16 A turbine hall drain system which would collect leakage of contaminated secondary plant waters during operation does not exist at IP3. The sumps which are present in the turbine hall five foot elevation receive drains from areas containing secondary plant components at sub-atmospheric pressures. These sumps would not meet the intent of the NUREG 0472.

The activity released to the environment via this pathway is negligible when steam generator blowdown activity is less than 3E-5 uCi/ml. Activity released via this pathway when steam generator activity exceeds 3E-5 uCi/ml is determined by the following method:

Turbine Hall Drain Effluent Activity	=	Feedwater Specific Activity	* {	Steam Plant Makeup Rate	-	S/G Blowdown rate to the River	}

(Ref: NUREG 0472, REV. 3, DRAFT 6, TABLE 3.3-12)

2.1.17 Carbon 14 is released at a rate of .07 curies per GW(e).yr with an average make up rate of 0.5 gal/min based upon studies performed by the New York State Department of Health. The estimate of Carbon 14 releases are included in the Radiological Impact on Man section of the Semi-annual Radioactive Effluent Release Report. These estimates are not included in dose calculations for routine releases.

2.1.18 The condensate polisher regenerant waste is routinely analyzed for radioactivity and is normally a non-radioactive release point. The monitoring program for this release point is consistent with the direction set forth in NRC IE Bulletin 80-10 "Contamination of Non-radioactive Systems and Resulting Potential for Unmonitored, Uncontrolled Release of Radioactivity to Environment". Should the system become radioactive, releases from this system will be in accordance with the requirements for batch waste release tanks listed in the RECS.

2.1.19 The liquid waste monitor tanks have an airborne release pathway. The original plant design limited the gases through this pathway by reducing the entrained gases to less than 2E-3 uCi/ml. When the entrained gas concentration in the monitor tank inlet exceeds 2E-3 uCi/ml, the noble gas release will be quantified by calculating the difference (in uCi's) between the gaseous activity added to the tank and the gaseous activity present in the effluent release sample. This difference will be the activity released through the tank vents and is quantified as an airborne release.

2.2 Liquid Effluent Concentrations

2.2.1 This section provides a description of the means that will be used to demonstrate compliance with Radiological Effluent Control 2.3.1.

2.2.2 Compliance with the instantaneous limits of 10CFR20 is achieved by observance of discharge limits and described in Section 2.1.14. Normally for instantaneous release rate purposes, only dilution water from Unit 3 circulators is taken credit for, except as allowed by the Memorandum of Understanding between NYPA and Con Edison. A monthly report is issued which summarizes the radioactive releases from the site for the preceding month. This report provides information necessary to comply with quarterly and annual average limitations on discharge.

2.2.3 Each isolated liquid waste tank must be recirculated for at least two tank volumes prior to sampling in order to ensure a representative sample is obtained. A default minimum recirculation time may be used for 31 and 32 monitor tank in lieu of the actual calculation. This value is 4 hours, based upon the following calculation:

$$\frac{11750\ gals \cdot 2\ Tank\ Volumes}{100\ gal/\text{min}} = 3.9\ Hours \approx 4\ Hours$$

Note: 100 gpm is the recirculation flow rate as determined by pump curves.

2.2.4 The concentration in liquid effluents prior to dilution in the discharge canal is determined by sampling prior to release for batch releases. For continuous release the concentration can be determined by either grab sampling as in the batch release method or by direct reading radiation monitor. If the process radiation monitor is utilized care should be taken to ensure the calibration factor used is appropriate for the mixture being released.

For non-direct reading monitors, the following calculation is used.

$$C = CF * CR$$

C = Concentration of liquid effluent (uCi/ml) prior to dilution.

CF = Conversion factor of monitor $\frac{(uCi/ml)}{ncpm}$

CR = Count rate of monitor (ncpm)

2.2.5 The final diluted concentration in the discharge canal is determined by the following:

$$CD = (C) * (f) / (F)$$

Where: CD = Diluted concentration in the discharge canal in uCi/ml

C = Concentration in the liquid to be released prior to dilution in uCi/ml

F = Dilution flow in the discharge canal in gal/min

f = Release rate of liquid effluent in gal/min

NOTE: This equation is not used for calculating allowable release rates.

2.2.6 Calculation of Maximum Permissible Concentration in liquid effluents

a. This section describes the methodology used to ensure the requirements of section 2.3.1 of the RECS are satisfied. The total discharge canal concentration of radionuclides must be maintained less than the effective maximum permissible concentration for the radionuclide mixture, as per 10CFR20. The noble gases will be included using the limit 2E-4 uCi/ml as specified in section 2.3.1 of the RECS. This will normally be ensured by using an Allowed Dilution Concentration on each discrete release. This differs from the ADC calculated in 10CFR20 appendix B in that for radioisotopes that do not have gammas greater than 60 kev emitted during decay, default values are included to estimate their contribution. The Allowed Diluted Concentration is calculated as follows:

$$ADC = \frac{MPCW_t}{1 + \frac{CB}{CG}}$$

Where:

ADC = Allowed diluted concentration in uCi/ml

$MPCW_t$ = Maximum permissible concentration in water for all isotopes (beta & gamma), in uCi/ml

CB = The concentration of the non gamma emitters, in uCi/ml

CG = The concentration of the gamma emitters in uCi/ml

b. A representative sample must be obtained. In the case of a batch release this is ensured by having the contents of the tank recirculated for at least two tank volumes after the tank has been isolated. The minimum recirculation time is determined as follows:

NOTE: As stated in Section 2.2.3, a default recirculation time for 31 and 32 monitor tanks of 4 hours maybe used to simplify routine calculations.

$$T = 2 (V) / (G)$$

Where:

T = Minimum recirculation time in min

V = Volumes in the tank to be discharged, in gal

G = Recirculation rate in gal/min

c. After the tank has been sampled, determine the Allowed Diluted Concentration as per step 2.2.6a.

d. Determine if other liquid radioactive discharges are being made from this unit and obtain the radioactive concentration and discharge rate. If another release is occurring, the available dilution flow must be adjusted. This may be performed by allocation or by calculation. The adjusted dilution flow is calculated as follows:

$$E = \frac{Dr \cdot CG}{ADC}$$

Where:

Dr = Current release discharge rate (gpm)

E = Required dilution flow for current release (gpm)

CG = Total concentration of gamma emitting isotopes in current release (μCi/ml)

ADC = Allowed diluted concentration for current release (μCi/ml)

e. Calculate the permissible discharge rate as follows:

$$D = \frac{ADC \cdot B}{CG}$$

Where: ADC = Allowed diluted concentration as calculated in Step 2.2.6.a, in uCi/ml

D = Permissible discharge rate in gal/min

B = Adjusted dilution flow from the unit, in gpm, from Step 2.2.6.d, above, as follows:

B	=	Available Dilution Flow	-	Required Dilution Flow (E)

CG = Gamma emitter concentration in uCi/ml

2.3 Liquid Effluent Dose Calculation Requirements

2.3.1 Section 2.3.2 of the Radiological Effluent Controls requires that the dose or dose commitment above background to an individual in an unrestricted area from radioactive materials in liquid effluents released from each reactor unit shall be limited:

a) During any calendar quarter: Less than or equal to 1.5 mrem to the total body and to less than or equal to 5 mrem to any organ.

b) During any calendar year: Less than or equal to 3 mrem to the total body and to less than or equal to 10 mrem to any organ.

NOTE: If either of the above limits is exceeded by a factor of two or more, then cumulative dose contributions from direct radiation would be determined by evaluation of existing perimeter and environmental TLDs per RECS 2.6.A.

2.3.2 Section 2.3.3 of the Radiological Effluent Controls requires that appropriate portions of the radwaste treatment system be used to reduce the radioactive material in liquid waste prior to their discharge when the projected dose due to liquid effluent from each reactor unit when averaged over 31 days, would exceed 0.06 mrem to the total body or 0.2 mrem to any organ. Doses due to liquid release shall be projected at least once per 31 days.

These doses are projected based on the dose methodology in Section 2.4. or 2.5. The average of previous months' doses is used to project future dose.

2.3.3 Section 2.3.1 of Radiological Effluent Controls require that the concentration of radioactive material released from the site shall be limited to 10 times the concentration values specified in 10 CFR Part 20, Appendix B, Table 2, Column 2 for radionuclides other than dissolved or entrained noble gases. For dissolved or entrained noble gases the concentration shall be limited to 2E-4 uCi/ml total activity.

2.4 Dose Methodology (Computer Calculation)

2.4.1 NUREG 0133 (Ref. 1, Section 4.3, Pg. 14) states that cumulative dose contributions should consider the dose contribution from the maximum exposed individual's consumption of fish, invertebrates, and potable water as appropriate. The river at IP3NPP is considered to be fresh water when in reality it is a tidal estuary and never completely fresh. Observed average chlorosity at IP3NPP has ranged as high as 2.5 g/l or about 13% sea water and 87% fresh water. Hence, use of the Hudson River for water supply purposes is precluded south of Chelsea (mile point 65) which is the nearest point of potable water supply. Radionuclide concentrations in the nearest water supply have been calculated (Ref. 2) to be a factor of at least 500 lower than the river water in the Indian Point area. Exposures from ingestion of drinking water is therefore negligible.

Based on these factors, potable water consumption is not considered to be a pathway at IP3NPP. Thus, at IP3NPP, the cumulative dose considers only the dose contributions from the maximum exposed individuals consumption of fish and invertebrates. Tables of dose factors for three age groups were developed as per Section 2.4.3 and are included as Tables 2-1, 2-2, and 2-3. (Infant dose factors are 0 and are not included).

2.4.2 The relationships and methods that form the calculational base for dose accounting for the liquid effluent pathway are described in this section. These relationships can be used to meet the calculational requirements of Section 2.3.1. The cumulative dose factors (AiT) are calculated in Section 2.4.3. The following equation is generally applicable and can be used for any number of isotopes released over any time period. The equation for D(T) is to be summed over all i nuclides:

$$D(T) = AiT = \sum_{k=1}^{n} (dtk)(Cik)(Fk)$$

Where:

D(T) = The cumulative dose commitment to the total body or any organ, T, from liquid effluents for the total time period equal to the sum from k=1 to n of dtk, in mrem.

dtk = The length of the kth time period over which Cik and Fk are averaged for all liquid releases, in hours.

Cik = The average concentration of radionuclide, i, in undiluted liquid effluent during time period dtk from any liquid release, in μCi/ml.

n = The total number of releases considered.

AiT = The site related ingestion dose commitment factor to the total body or any organ for each IP3NPP identified principal gamma and beta emitter listed in Table 2-1, 2-2, and 2-3, in mrem-ml per hr-μCi.

Fk = The near field average dilution factor for Cik during any liquid effluent releases. Defined as the ratio of the maximum undiluted liquid waste flow during release to the average flow from the site discharge structure to unrestricted receiving waters, times an applicable factor.

The term Cik is the composite undiluted concentration of radioactive material in liquid waste at the release point as determined by the radioactive liquid waste sampling and analysis program as contained in the Radiological Effluent Controls. All dilution factors beyond the sample point are included in the Fk and AiT terms.

The term Fk is a near field average dilution factor and is determined as follows:

$$Fk = \frac{\text{Liquid Radioactive Waste Flow}}{\text{[Discharge Structure Exit Flow * Applicable Factor]}}$$

The liquid radioactive waste flow is the flow from all continuous and batch radioactive effluent releases specified in the Radiological Effluent Controls from all liquid radioactive waste management systems. The discharge structure exit flow is the average flow during disposal from the discharge structure release point into the receiving body of water. Based on studies by New York University Medical Center (ref. 14 page 7). the appropriate "Applicable Factor" is 5.

In order to accurately determine Fk, it is calculated based on actual dilution flow from its site for the time period considered. This affords a quantitative assessment of radiation dose resulting from liquid effluent releases at IP3NPP. The determination and use of dilution factors is discussed in Section 2.2.

2.4.3 Dose Factor for Liquid Effluent Calculations

2.4.3.1 The equation for dose from liquid effluents requires the use of a dose factor AiT for each nuclide, i, which embodies the dose factors, pathway transfer factor, pathway usage factors, and dilution factors for the points of pathway origin. IP3NPP has followed the guidance of NUREG 0133 and has calculated AiT for the total body and critical organ of the maximum exposed individual (e.g. the adult). All the factors needed in the equation were obtained from Regulatory Guide 1.109 (Ref. 3) with the exception of the fish and invertebrate bioaccumulation factors (BFi and BIi) for Cesium, Niobium, Silver, and Antimony.

For Cesium a site specific factor of 224 was used instead of the 2,000 presented in Table A-1 of the Regulatory Guide for fish. Similarly, a factor of 224 was used for invertebrates instead of the Regulatory Guide value of 1000. For Silver, the fish and invertebrate factors are 2.3 and 3300, respectively. For Niobium, the fish and invertebrate factors are 300 and 100 respectively. For Antimony, the fish and invertebrate factors are 1 and 300 respectively. The justification for these substitutions is discussed in Section 2.6. The summary dose factor is as follows:

$$AiT = K[(UF)BFi + (UI)BIi]DFi$$

Where:

AiT = Composite dose parameter for the total body or critical organ for nuclide, i, for all appropriate pathways, mrem/hr per μCi/ml.

K = Units conversion factor, 114155 = (1E6pCi/μCi) (1E3ml/kg) / 8760 hr/yr

UF = kg/yr fish consumption from Table E-5 of Regulatory Guide 1.109:

21	Adult	6.9	Child
16	Teen	0	Infant

BFi = Bioaccumulation factor for nuclide, i, in fish pCi/kg per pCi/l from Table A-1 of Regulatory Guide 1.109.

UI = kg/yr invertebrate consumption from Table E-5 of Regulatory Guide 1.109:

5.0	Adult	1.7	Child
3.8	Teen	0	Infant

BIi = Bioaccumulation factor for nuclide, i, in invertebrates, pCi/kg per pCi/l from Table A-1 of Regulatory Guide 1.109.

DFi = Dose conversion factor for nuclide, i, for age groups in pre-selected organs, T, in mrem/pCi, from Tables E-11, 12 & 13 of Regulatory Guide 1.109.

IP3NPP has compiled AiT factors for 3 age groups and various organs for the maximum exposed individual. These are included as Table 2-1, 2-2, and 2-3. For completeness, this table includes all isotopes found in Reg Guide 1.109, however, several isotopes listed are not routinely identified at IP-3. In addition, the values for Antimony, Silver, Cesium, and Niobium are site specific as previously discussed.

2.5 Backup Calculation Methodology

These methods provide backup calculations identical to those performed in Section 2.4

2.5.1 An alternate computer method which completely complies with Section 2.4 should be used when the primary computer system is inoperable.

2.5.2 Hand Calculations which completely comply with Section 2.4 can be employed if the primary and secondary computer codes are inoperable. Because they are time consuming and subject to calculational errors, procedural guidance in the actual flow of calculations should be used to maintain a standard format. These procedures are also used for periodic benchmark tests of the computer codes.

2.6 Site Specific Bio-Accumulation & Dose Factors

2.6.1 As stated in Section 2.4.3 the bioaccumulation factor (BFi) for Cesium in fish is assumed to be 224 instead of the 2000 listed in Regulatory Guide 1.109 (Ref. 3). Similarly, the bioaccumulation factor for invertebrates is 224. This is based on the fact that the Hudson River at IP3NPP is not completely fresh, the Bioaccumulation Factor for salt water is 40 (Ref. 2), and that the behavior of Cesium in the Hudson is a complex phenomenon.

The NYU Study (Ref. 2) shows that Cesium concentrations in fish are regulated at a relatively constant value independent of the concentration of Cesium in water, and the bioaccumulator factors are thus inversely proportional to the water concentration of Cesium. This explains the lower bioaccumulation factor for Cesium reported by numerous investigators for salt water fish as opposed to fresh water fish because of the higher stable Cesium content of sea water. The NYU Report states that water at Indian Point has a dissolved Cesium concentration which is much higher than would be expected from simple mixing between sea water and fresh water and postulates that these higher concentrations result from leaching of Cesium from bottom sediment by saline water.

Use of the bioaccumulation factors of Regulatory Guide 1.109 for a fresh water site will thus substantially overestimate fish ingestion doses because no account is taken of the phenomena just discussed. However, radiocesium concentrations in fish may still be estimated through the use of a bioaccumulation factor, provided that this factor is determined from the body of water of interest. This factor has been estimated (Ref. 12, page 33) to be about 224 for the flesh of indigenous fish caught in the Indian Point area. In contrast, the Cesium fresh water bioaccumulation factor presented by Regulatory Guide 1.109 for fish is 2000.

Fish ingestion doses would therefore be overestimated by a factor of 13 if the Regulatory Guide values were used.

Similarly for invertebrates, the site specific bioaccumulation factor of 224 is used. This is larger than the value of 25 given in Reg Guide 1.109 for salt water invertebrates.

A second conservatism in the NRC model concerns the location at which the concentrations in the river of the discharged Cesium are evaluated. Use of this model implies that these fish have grown directly in such a location prior to being caught, which is unrealistic and adds about a factor of five in conservation. This conservatism remains in the calculation, thus the use of the NYU (Ref. 12) bioaccumulation factor is justifiable since this remains as a conservative calculation.

2.6.2 No bioaccumulation factor for Silver is listed in Rev. 1 of Regulatory Guide 1.109, Table A-1. The values of 2.3 and 3300 for fish and invertebrates were obtained from ERDA publication 660 (March 1976), Oak Ridge National Laboratories and are included in the ODCM in the interests of increased accuracy since Ag110m is a potential component of IP3NPP liquid releases.

2.6.3 International Atomic Energy Agency Report No. 57 provides data more recent than that presented in Regulatory Guide 1.109 for niobium bioaccumulation factors. The factor in the Regulatory Guide appears to be substantially overconservative and, therefore, the more recent IAEA information is incorporated into the dose calculation methodology for liquid releases of radioniobium. The values from Table XVII of IAEA No. 57 are 300 and 100 for freshwater fish and marine invertebrates respectively and are incorporated into this ODCM.

2.6.4 Antimony isotopes are not listed in Reg. Guide 1.109. As for Niobium above, IAEA Report No. 57 was used to provide bioaccumulation factors for the Antimony isotopes in Table 2-1. Dose factors were calculated for Antimony as per Reference #13.

2.6.5 In summary, with the exception of the bioaccumulation factors discussed above, all remaining factors are as follows: fish factors are for fresh water and invertebrate factors are for salt water.

Table 2 - 1

Site Related Adult Ingestion Dose Commitment Factors
(Freshwater Fish and Saltwater Invertebrate Consumption)

(AiT)
mR/hr per uCi/ml

ISOTOPE	BONE	LIVER	TOT BODY	THYROID	KIDNEY	LUNG	GI-LLI
H-3	0.00E+00	2.82E-01	2.82E-01	2.82E-01	2.82E-01	2.82E-01	2.82E-01
BE-7	3.29E-01	7.45E-01	3.69E-01	0.00E+00	7.83E-01	0.00E+00	1.28E+02
NA-24	4.08E+02	4.08E+02	4.08E+02	4.08E+02	4.08E+02	4.08E+02	4.08E+02
P-32	4.96E+07	3.08E+06	1.92E+06	0.00E+00	0.00E+00	0.00E+00	5.57E+06
CR-51	0.00E+00	0.00E+00	4.31E+00	2.58E+00	9.50E-01	5.72E+00	1.08E+03
MN-54	0.00E+00	5.43E+03	1.04E+03	0.00E+00	1.61E+03	0.00E+00	1.66E+04
MN-56	0.00E+00	1.37E+02	2.42E+01	0.00E+00	1.73E+02	0.00E+00	4.36E+03
FE-55	3.21E+04	2.21E+04	5.16E+03	0.00E+00	0.00E+00	1.24E+04	1.27E+04
FE-59	5.06E+04	1.19E+05	4.56E+04	0.00E+00	0.00E+00	3.32E+04	3.96E+05
CO-58	0.00E+00	5.15E+02	1.15E+03	0.00E+00	0.00E+00	0.00E+00	1.04E+04
CO-60	0.00E+00	1.48E+03	3.26E+03	0.00E+00	0.00E+00	0.00E+00	2.78E+04
NI-63	4.97E+04	3.45E+03	1.67E+03	0.00E+00	0.00E+00	0.00E+00	7.19E+02
NI-65	2.02E+02	2.62E+01	1.20E+01	0.00E+00	0.00E+00	0.00E+00	6.65E+02
CU-64	0.00E+00	9.08E+01	4.26E+01	0.00E+00	2.29E+02	0.00E+00	7.74E+03
ZN-65	1.61E+05	5.13E+05	2.32E+05	0.00E+00	3.43E+05	0.00E+00	3.23E+05
ZN-69	3.43E+02	6.57E+02	4.57E+01	0.00E+00	4.27E+02	0.00E+00	9.87E+01
BR-83	0.00E+00	0.00E+00	4.05E+01	0.00E+00	0.00E+00	0.00E+00	5.84E+01
BR-84	0.00E+00	0.00E+00	5.25E+01	0.00E+00	0.00E+00	0.00E+00	4.13E-04
BR-85	0.00E+00	0.00E+00	2.16E+00	0.00E+00	0.00E+00	0.00E+00	0.00E+00
RB-86	0.00E+00	1.01E+05	4.72E+04	0.00E+00	0.00E+00	0.00E+00	2.00E+04
RB-88	0.00E+00	2.91E+02	1.54E+02	0.00E+00	0.00E+00	0.00E+00	4.02E-09
RB-89	0.00E+00	1.93E+02	1.35E+02	0.00E+00	0.00E+00	0.00E+00	1.12E-11
SR-89	2.57E+04	0.00E+00	7.37E+02	0.00E+00	0.00E+00	0.00E+00	4.12E+03
SR-90	6.32E+05	0.00E+00	1.55E+05	0.00E+00	0.00E+00	0.00E+00	1.82E+04
SR-91	4.72E+02	0.00E+00	1.91E+01	0.00E+00	0.00E+00	0.00E+00	2.25E+03
SR-92	1.79E+02	0.00E+00	7.75E+00	0.00E+00	0.00E+00	0.00E+00	3.55E+03
Y-90	6.07E+00	0.00E+00	1.63E-01	0.00E+00	0.00E+00	0.00E+00	6.43E+04
Y-91M	5.73E-02	0.00E+00	2.22E-03	0.00E+00	0.00E+00	0.00E+00	1.68E-01
Y-91	8.89E+01	0.00E+00	2.38E+00	0.00E+00	0.00E+00	0.00E+00	4.89E+04
Y-92	5.33E-01	0.00E+00	1.56E-02	0.00E+00	0.00E+00	0.00E+00	9.33E+03
Y-93	1.69E+00	0.00E+00	4.67E-02	0.00E+00	0.00E+00	0.00E+00	5.36E+04
ZR-95	1.63E+00	5.22E-01	3.54E-01	0.00E+00	8.20E-01	0.00E+00	1.66E+03
ZR-97	9.00E-02	1.82E-02	8.30E-03	0.00E+00	2.74E-02	0.00E+00	5.63E+03
NB-95	4.83E+00	2.69E+00	1.44E+00	0.00E+00	2.65E+00	0.00E+00	1.63E+04
MO-99	0.00E+00	1.28E+02	2.43E+01	0.00E+00	2.90E+02	0.00E+00	2.97E+02
TC-99M	1.59E-02	4.50E-02	5.73E-01	0.00E+00	6.84E-01	2.21E-02	2.66E+01
TC-101	1.64E-02	2.36E-02	2.32E-01	0.00E+00	4.25E-01	1.21E-02	7.09E-14
RU-103	1.10E+02	0.00E+00	4.74E+01	0.00E+00	4.20E+02	0.00E+00	1.28E+04
RU-105	9.16E+00	0.00E+00	3.62E+00	0.00E+00	1.18E+02	0.00E+00	5.60E+03
RU-106	1.64E+03	0.00E+00	2.07E+02	0.00E+00	3.16E+03	0.00E+00	1.06E+05
AG-110M	3.02E+02	2.80E+02	1.66E+02	0.00E+00	5.50E+02	0.00E+00	1.14E+05
SB-122	3.47E+01	7.99E-01	1.20E+01	5.38E-01	0.00E+00	2.08E+01	1.32E+04
SB-124	4.86E+02	9.20E+00	1.91E+02	1.18E+00	0.00E+00	3.79E+02	1.38E+04
SB-125	3.11E+02	3.47E+00	7.40E+01	3.16E-01	0.00E+00	2.40E+02	3.42E+03

Table 2 - 1

Site Related Adult Ingestion Dose Commitment Factors
(Freshwater Fish and Saltwater Invertebrate Consumption)

(AiT)
mR/hr per uCi/ml

ISOTOPE	BONE	LIVER	TOT BODY	THYROID	KIDNEY	LUNG	GI-LLI
TE-125M	2.72E+03	9.87E+02	3.65E+02	8.19E+02	1.11E+04	0.00E+00	1.09E+04
TE-127M	6.88E+03	2.46E+03	8.38E+02	1.76E+03	2.79E+04	0.00E+00	2.31E+04
TE-127	1.12E+02	4.01E+01	2.42E+01	8.28E+01	4.55E+02	0.00E+00	8.82E+03
TE-129M	1.17E+04	4.36E+03	1.85E+03	4.01E+03	4.88E+04	0.00E+00	5.88E+04
TE-129	3.19E+01	1.20E+01	7.77E+00	2.45E+01	1.34E+02	0.00E+00	2.41E+01
TE-131M	1.76E+03	8.60E+02	7.16E+02	1.36E+03	8.71E+03	0.00E+00	8.53E+04
TE-131	2.00E+01	8.36E+00	6.32E+00	1.65E+01	8.77E+01	0.00E+00	2.83E+00
TE-132	2.56E+03	1.66E+03	1.55E+03	1.83E+03	1.60E+04	0.00E+00	7.83E+04
I-130	4.88E+01	1.44E+02	5.68E+01	1.22E+04	2.24E+02	0.00E+00	1.24E+02
I-131	2.68E+02	3.84E+02	2.20E+02	1.26E+05	6.58E+02	0.00E+00	1.01E+02
I-132	1.31E+01	3.50E+01	1.23E+01	1.23E+03	5.58E+01	0.00E+00	6.58E+00
I-133	9.16E+01	1.59E+02	4.86E+01	2.34E+04	2.78E+02	0.00E+00	1.43E+02
I-134	6.84E+00	1.86E+01	6.64E+00	3.22E+02	2.95E+01	0.00E+00	1.62E-02
I-135	2.86E+01	7.48E+01	2.76E+01	4.93E+03	1.20E+02	0.00E+00	8.45E+01
CS-134	4.14E+04	9.84E+04	8.04E+04	0.00E+00	3.18E+04	1.06E+04	1.72E+03
CS-136	4.33E+03	1.71E+04	1.23E+04	0.00E+00	9.51E+03	1.30E+03	1.94E+03
CS-137	5.30E+04	7.25E+04	4.75E+04	0.00E+00	2.46E+04	8.18E+03	1.40E+03
CS-138	3.67E+01	7.25E+01	3.59E+01	0.00E+00	5.33E+01	5.26E+00	3.09E-04
BA-139	6.47E+00	4.61E-03	1.89E-01	0.00E+00	4.31E-03	2.61E-03	1.15E+01
BA-140	1.35E+03	1.70E+00	8.87E+01	0.00E+00	5.78E-01	9.73E-01	2.79E+03
BA-141	3.14E+00	2.37E-03	1.06E-01	0.00E+00	2.21E-03	1.35E-03	1.48E-09
BA-142	1.42E+00	1.46E-03	8.93E-02	0.00E+00	1.23E-03	8.27E-04	2.00E-18
LA-140	1.58E+00	7.95E-01	2.10E-01	0.00E+00	0.00E+00	0.00E+00	5.83E+04
LA-142	8.07E-02	3.67E-02	9.15E-03	0.00E+00	0.00E+00	0.00E+00	2.68E+02
CE-141	3.23E+00	2.18E+00	2.48E-01	0.00E+00	1.01E+00	0.00E+00	8.35E+03
CE-143	5.69E-01	4.21E+02	4.66E-02	0.00E+00	1.85E-01	0.00E+00	1.57E+04
CE-144	1.68E+02	7.04E+01	9.04E+00	0.00E+00	4.17E+01	0.00E+00	5.69E+04
PR-143	5.80E+00	2.33E+00	2.88E-01	0.00E+00	1.34E+00	0.00E+00	2.54E+04
PR-144	1.90E-02	7.88E-03	9.65E-04	0.00E+00	4.45E-03	0.00E+00	2.73E-09
ND-147	3.97E+00	4.59E+00	2.74E-01	0.00E+00	2.68E+00	0.00E+00	2.20E+04
W-187	2.98E+02	2.49E+02	8.71E+01	0.00E+00	0.00E+00	0.00E+00	8.16E+04
NP-239	3.53E-02	3.47E-03	1.91E-03	0.00E+00	1.08E-02	0.00E+00	7.12E+02
K-40	0.00E+00	0.00E+00	0.00E+00	0.00E+00	0.00E+00	0.00E+00	0.00E+00
CO-57	0.00E+00	1.21E+02	2.01E+02	0.00E+00	0.00E+00	0.00E+00	3.07E+03
SR-85	0.00E+00	0.00E+00	0.00E+00	0.00E+00	0.00E+00	0.00E+00	0.00E+00
Y-88	0.00E+00	0.00E+00	0.00E+00	0.00E+00	0.00E+00	0.00E+00	0.00E+00
NB-94	0.00E+00	0.00E+00	0.00E+00	0.00E+00	0.00E+00	0.00E+00	0.00E+00
NB-97	4.05E-02	1.02E-02	3.74E-03	0.00E+00	1.20E-02	0.00E+00	3.78E+01
CD-109	0.00E+00	0.00E+00	0.00E+00	0.00E+00	0.00E+00	0.00E+00	0.00E+00
SN-113	0.00E+00	0.00E+00	0.00E+00	0.00E+00	0.00E+00	0.00E+00	0.00E+00
BA-133	0.00E+00	0.00E+00	0.00E+00	0.00E+00	0.00E+00	0.00E+00	0.00E+00
TE-134	3.29E+01	2.15E+01	1.32E+01	2.88E+01	2.08E+02	0.00E+00	3.65E-02
CE-139	0.00E+00	0.00E+00	0.00E+00	0.00E+00	0.00E+00	0.00E+00	0.00E+00
HG-203	0.00E+00	0.00E+00	0.00E+00	0.00E+00	0.00E+00	0.00E+00	0.00E+00

Table 2 - 2

Site Related Teen Ingestion Dose Commitment Factors
(Freshwater Fish and Saltwater Invertebrate Consumption)

(AiT)
mR/hr per uCi/ml

ISOTOPE	BONE	LIVER	TOT BODY	THYROID	KIDNEY	LUNG	GI-LLI
H-3	0.00E+00	2.17E-01	2.17E-01	2.17E-01	2.17E-01	2.17E-01	2.17E-01
BE-7	3.58E-01	8.02E-01	4.01E-01	0.00E+00	8.50E-01	0.00E+00	9.76E+01
NA-24	4.20E+02	4.20E+02	4.20E+02	4.20E+02	4.20E+02	4.20E+02	4.20E+02
P-32	5.40E+07	3.35E+06	2.09E+06	0.00E+00	0.00E+00	0.00E+00	4.54E+06
CR-51	0.00E+00	0.00E+00	4.44E+00	2.47E+00	9.73E-01	6.34E+00	7.46E+02
MN-54	0.00E+00	5.33E+03	1.06E+03	0.00E+00	1.59E+03	0.00E+00	1.09E+04
MN-56	0.00E+00	1.43E+02	2.54E+01	0.00E+00	1.81E+02	0.00E+00	9.40E+03
FE-55	3.35E+04	2.37E+04	5.54E+03	0.00E+00	0.00E+00	1.51E+04	1.03E+04
FE-59	5.20E+04	1.21E+05	4.69E+04	0.00E+00	0.00E+00	3.83E+04	2.87E+05
CO-58	0.00E+00	5.10E+02	1.18E+03	0.00E+00	0.00E+00	0.00E+00	7.04E+03
CO-60	0.00E+00	1.48E+03	3.32E+03	0.00E+00	0.00E+00	0.00E+00	1.92E+04
NI-63	5.15E+04	3.64E+03	1.75E+03	0.00E+00	0.00E+00	0.00E+00	5.79E+02
NI-65	2.18E+02	2.79E+01	1.27E+01	0.00E+00	0.00E+00	0.00E+00	1.51E+03
CU-64	0.00E+00	9.53E+01	4.48E+01	0.00E+00	2.41E+02	0.00E+00	7.39E+03
ZN-65	1.46E+05	5.07E+05	2.36E+05	0.00E+00	3.24E+05	0.00E+00	2.15E+05
ZN-69	3.73E+02	7.10E+02	4.97E+01	0.00E+00	4.64E+02	0.00E+00	1.31E+03
BR-83	0.00E+00	0.00E+00	4.41E+01	0.00E+00	0.00E+00	0.00E+00	0.00E+00
BR-84	0.00E+00	0.00E+00	5.55E+01	0.00E+00	0.00E+00	0.00E+00	0.00E+00
BR-85	0.00E+00	0.00E+00	2.34E+00	0.00E+00	0.00E+00	0.00E+00	0.00E+00
RB-86	0.00E+00	1.09E+05	5.12E+04	0.00E+00	0.00E+00	0.00E+00	1.61E+04
RB-88	0.00E+00	3.12E+02	1.66E+02	0.00E+00	0.00E+00	0.00E+00	2.67E-05
RB-89	0.00E+00	2.01E+02	1.42E+02	0.00E+00	0.00E+00	0.00E+00	3.09E-07
SR-89	2.79E+04	0.00E+00	8.00E+02	0.00E+00	0.00E+00	0.00E+00	3.33E+03
SR-90	5.27E+05	0.00E+00	1.30E+05	0.00E+00	0.00E+00	0.00E+00	1.48E+04
SR-91	5.12E+02	0.00E+00	2.04E+01	0.00E+00	0.00E+00	0.00E+00	2.32E+03
SR-92	1.94E+02	0.00E+00	8.25E+00	0.00E+00	0.00E+00	0.00E+00	4.93E+03
Y-90	6.57E+00	0.00E+00	1.77E-01	0.00E+00	0.00E+00	0.00E+00	5.42E+04
Y-91M	6.18E-02	0.00E+00	2.36E-03	0.00E+00	0.00E+00	0.00E+00	2.92E+00
Y-91	9.64E+01	0.00E+00	2.58E+00	0.00E+00	0.00E+00	0.00E+00	3.95E+04
Y-92	5.80E-01	0.00E+00	1.68E-02	0.00E+00	0.00E+00	0.00E+00	1.59E+04
Y-93	1.84E+00	0.00E+00	5.03E-02	0.00E+00	0.00E+00	0.00E+00	5.61E+04
ZR-95	1.68E+00	5.29E-01	3.64E-01	0.00E+00	7.78E-01	0.00E+00	1.22E+03
ZR-97	9.65E-02	1.91E-02	8.80E-03	0.00E+00	2.90E-02	0.00E+00	5.17E+03
NB-95	4.86E+00	2.70E+00	1.48E+00	0.00E+00	2.61E+00	0.00E+00	1.15E+04
MO-99	0.00E+00	1.36E+02	2.60E+01	0.00E+00	3.12E+02	0.00E+00	2.44E+02
TC-99M	1.63E-02	4.55E-02	5.89E-01	0.00E+00	6.77E-01	2.52E-02	2.98E+01
TC-101	1.77E-02	2.51E-02	2.47E-01	0.00E+00	4.55E-01	1.53E-02	4.30E-09
RU-103	1.15E+02	0.00E+00	4.93E+01	0.00E+00	4.06E+02	0.00E+00	9.63E+03
RU-105	9.85E+00	0.00E+00	3.82E+00	0.00E+00	1.24E+02	0.00E+00	7.96E+03
RU-106	1.77E+03	0.00E+00	2.23E+02	0.00E+00	3.42E+03	0.00E+00	8.50E+04
AG-110M	2.94E+02	2.79E+02	1.69E+02	0.00E+00	5.31E+02	0.00E+00	7.82E+04
SB-122	4.35E+01	8.47E-01	1.27E+01	5.53E-01	0.00E+00	2.72E+01	9.13E+03
SB-124	5.09E+02	9.40E+00	1.99E+02	1.16E+00	0.00E+00	4.45E+02	1.03E+04
SB-125	3.27E+02	3.58E+00	7.64E+01	3.11E-01	0.00E+00	2.85E+02	2.53E+03

Table 2 - 2

Site Related Teen Ingestion Dose Commitment Factors
(Freshwater Fish and Saltwater Invertebrate Consumption)

(AiT)
mR/hr per uCi/ml

ISOTOPE	BONE	LIVER	TOT BODY	THYROID	KIDNEY	LUNG	GI-LLI
TE-125M	2.96E+03	1.07E+03	3.96E+02	8.28E+02	0.00E+00	0.00E+00	8.75E+03
TE-127M	7.48E+03	2.65E+03	8.90E+02	1.78E+03	3.03E+04	0.00E+00	1.87E+04
TE-127	1.22E+02	4.33E+01	2.63E+01	8.44E+01	4.95E+02	0.00E+00	9.44E+03
TE-129M	1.26E+04	4.68E+03	2.00E+03	4.07E+03	5.28E+04	0.00E+00	4.74E+04
TE-129	3.47E+01	1.29E+01	8.44E+00	2.48E+01	1.46E+02	0.00E+00	1.90E+02
TE-131M	1.89E+03	9.06E+02	7.55E+02	1.36E+03	9.44E+03	0.00E+00	7.27E+04
TE-131	2.16E+01	8.90E+00	6.75E+00	1.66E+01	9.44E+01	0.00E+00	1.77E+00
TE-132	2.70E+03	1.71E+03	1.61E+03	1.80E+03	1.64E+04	0.00E+00	5.42E+04
I-130	5.06E+01	1.46E+02	5.84E+01	1.19E+04	2.25E+02	0.00E+00	1.12E+02
I-131	2.87E+02	4.02E+02	2.16E+02	1.17E+05	6.92E+02	0.00E+00	7.95E+01
I-132	1.37E+01	3.58E+01	1.29E+01	1.21E+03	5.64E+01	0.00E+00	1.56E+01
I-133	9.87E+01	1.67E+02	5.11E+01	2.34E+04	2.94E+02	0.00E+00	1.27E+02
I-134	7.17E+00	1.90E+01	6.82E+00	3.17E+02	2.99E+01	0.00E+00	2.50E-01
I-135	2.99E+01	7.71E+01	2.86E+01	4.96E+03	1.22E+02	0.00E+00	8.54E+01
CS-134	4.24E+04	9.97E+04	4.63E+04	0.00E+00	3.17E+04	1.21E+04	1.24E+03
CS-136	4.35E+03	1.71E+04	1.15E+04	0.00E+00	9.32E+03	1.47E+03	1.38E+03
CS-137	5.67E+04	7.54E+04	2.63E+04	0.00E+00	2.57E+04	9.97E+03	1.07E+03
CS-138	3.93E+01	7.54E+01	3.77E+01	0.00E+00	5.57E+01	6.48E+00	3.42E-02
BA-139	7.05E+00	4.96E-03	2.05E-01	0.00E+00	4.67E-03	3.42E-03	6.28E+01
BA-140	1.44E+03	1.76E+00	9.28E+01	0.00E+00	5.98E-01	1.19E+00	2.22E+03
BA-141	3.40E+00	2.54E-03	1.14E-01	0.00E+00	2.36E-03	1.74E-03	7.25E-06
BA-142	1.52E+00	1.52E-03	9.33E-02	0.00E+00	1.28E-03	1.01E-03	4.65E-12
LA-140	1.67E+00	8.20E-01	2.18E-01	0.00E+00	0.00E+00	0.00E+00	4.71E+04
LA-142	8.58E-02	3.81E-02	9.49E-03	0.00E+00	0.00E+00	0.00E+00	1.16E+03
CE-141	3.49E+00	2.33E+00	2.67E-01	0.00E+00	1.10E+00	0.00E+00	6.66E+03
CE-143	6.16E-01	4.48E+02	5.01E-02	0.00E+00	2.01E-01	0.00E+00	1.35E+04
CE-144	1.82E+02	7.55E+01	9.80E+00	0.00E+00	4.51E+01	0.00E+00	4.59E+04
PR-143	6.28E+00	2.51E+00	3.13E-01	0.00E+00	1.46E+00	0.00E+00	2.07E+04
PR-144	2.06E-02	8.44E-03	1.05E-03	0.00E+00	4.84E-03	0.00E+00	2.27E-05
ND-147	4.50E+00	4.89E+00	2.93E-01	0.00E+00	2.87E+00	0.00E+00	1.76E+04
W-187	3.22E+02	2.62E+02	9.19E+01	0.00E+00	0.00E+00	0.00E+00	7.10E+04
NP-239	3.98E-02	3.75E-03	2.08E-03	0.00E+00	1.18E-02	0.00E+00	6.03E+02
K-40	0.00E+00	0.00E+00	0.00E+00	0.00E+00	0.00E+00	0.00E+00	0.00E+00
CO-57	0.00E+00	1.25E+02	2.10E+02	0.00E+00	0.00E+00	0.00E+00	2.33E+03
SR-85	0.00E+00	0.00E+00	0.00E+00	0.00E+00	0.00E+00	0.00E+00	0.00E+00
Y-88	0.00E+00	0.00E+00	0.00E+00	0.00E+00	0.00E+00	0.00E+00	0.00E+00
NB-94	0.00E+00	0.00E+00	0.00E+00	0.00E+00	0.00E+00	0.00E+00	0.00E+00
NB-97	4.36E-02	1.08E-02	3.95E-03	0.00E+00	1.27E-02	0.00E+00	2.58E+02
CD-109	0.00E+00	0.00E+00	0.00E+00	0.00E+00	0.00E+00	0.00E+00	0.00E+00
SN-113	0.00E+00	0.00E+00	0.00E+00	0.00E+00	0.00E+00	0.00E+00	0.00E+00
BA-133	0.00E+00	0.00E+00	0.00E+00	0.00E+00	0.00E+00	0.00E+00	0.00E+00
TE-134	3.46E+01	2.22E+01	2.32E+01	2.84E+01	2.12E+02	0.00E+00	1.28E+00
CE-139	0.00E+00	0.00E+00	0.00E+00	0.00E+00	0.00E+00	0.00E+00	0.00E+00
HG-203	0.00E+00	0.00E+00	0.00E+00	0.00E+00	0.00E+00	0.00E+00	0.00E+00

Table 2 - 3

Site Related Child Ingestion Dose Commitment Factors
(Freshwater Fish and Saltwater Invertebrate Consumption)

(AiT)
mR/hr per uCi/ml

ISOTOPE	BONE	LIVER	TOT BODY	THYROID	KIDNEY	LUNG	GI-LLI
H-3	0.00E+00	1.81E-01	1.81E-01	1.81E-01	1.81E-01	1.81E-01	1.81E-01
BE-7	4.77E-01	8.08E-01	5.33E-01	0.00E+00	7.96E-01	0.00E+00	4.52E+01
NA-24	4.57E+02	4.57E+02	4.57E+02	4.57E+02	4.57E+02	4.57E+02	4.57E+02
P-32	6.98E+07	3.27E+06	2.69E+06	0.00E+00	0.00E+00	0.00E+00	1.93E+06
CR-51	0.00E+00	0.00E+00	4.86E+00	2.70E+00	7.37E-01	4.92E+00	2.58E+02
MN-54	0.00E+00	4.20E+03	1.12E+03	0.00E+00	1.18E+03	0.00E+00	3.53E+03
MN-56	0.00E+00	1.31E+02	2.96E+01	0.00E+00	1.59E+02	0.00E+00	1.90E+04
FE-55	4.55E+04	2.42E+04	7.48E+03	0.00E+00	0.00E+00	1.37E+04	4.47E+03
FE-59	6.53E+04	1.06E+05	5.27E+04	0.00E+00	0.00E+00	3.07E+04	1.10E+05
CO-58	0.00E+00	4.20E+02	1.29E+03	0.00E+00	0.00E+00	0.00E+00	2.45E+03
CO-60	0.00E+00	1.23E+03	3.64E+03	0.00E+00	0.00E+00	0.00E+00	6.84E+03
NI-63	6.85E+04	3.67E+03	2.33E+03	0.00E+00	0.00E+00	0.00E+00	2.47E+02
NI-65	2.83E+02	2.66E+01	1.55E+01	0.00E+00	0.00E+00	0.00E+00	3.26E+03
CU-64	0.00E+00	9.05E+01	5.47E+01	0.00E+00	2.19E+02	0.00E+00	4.25E+03
ZN-65	1.55E+05	4.12E+05	2.56E+05	0.00E+00	2.59E+05	0.00E+00	7.23E+04
ZN-69	4.94E+02	7.14E+02	6.60E+01	0.00E+00	4.33E+02	0.00E+00	4.50E+04
BR-83	0.00E+00	0.00E+00	5.67E+01	0.00E+00	0.00E+00	0.00E+00	0.00E+00
BR-84	0.00E+00	0.00E+00	6.56E+01	0.00E+00	0.00E+00	0.00E+00	0.00E+00
BR-85	0.00E+00	0.00E+00	3.02E+00	0.00E+00	0.00E+00	0.00E+00	0.00E+00
RB-86	0.00E+00	1.06E+05	6.50E+04	0.00E+00	0.00E+00	0.00E+00	6.80E+03
RB-88	0.00E+00	3.00E+02	2.08E+02	0.00E+00	0.00E+00	0.00E+00	1.47E+01
RB-89	0.00E+00	1.85E+02	1.64E+02	0.00E+00	0.00E+00	0.00E+00	1.61E+00
SR-89	3.63E+04	0.00E+00	1.04E+03	0.00E+00	0.00E+00	0.00E+00	1.41E+03
SR-90	4.68E+05	0.00E+00	1.19E+05	0.00E+00	0.00E+00	0.00E+00	6.30E+03
SR-91	6.60E+02	0.00E+00	2.49E+01	0.00E+00	0.00E+00	0.00E+00	1.46E+03
SR-92	2.48E+02	0.00E+00	9.96E+00	0.00E+00	0.00E+00	0.00E+00	4.70E+03
Y-90	8.79E+00	0.00E+00	2.35E-01	0.00E+00	0.00E+00	0.00E+00	2.50E+04
Y-91M	8.17E-02	0.00E+00	2.97E-03	0.00E+00	0.00E+00	0.00E+00	1.60E+02
Y-91	1.29E+02	0.00E+00	3.44E+00	0.00E+00	0.00E+00	0.00E+00	1.71E+04
Y-92	7.70E-01	0.00E+00	2.20E-02	0.00E+00	0.00E+00	0.00E+00	2.22E+04
Y-93	2.44E+00	0.00E+00	6.69E-02	0.00E+00	0.00E+00	0.00E+00	3.63E+04
ZR-95	2.10E+00	4.62E-01	4.11E-01	0.00E+00	6.62E-01	0.00E+00	4.82E+02
ZR-97	1.27E-01	1.83E-02	1.08E-02	0.00E+00	2.63E-02	0.00E+00	2.77E+03
NB-95	5.75E+00	2.24E+00	1.60E+00	0.00E+00	2.10E+00	0.00E+00	4.14E+03
MO-99	0.00E+00	1.31E+02	3.23E+01	0.00E+00	2.79E+02	0.00E+00	1.08E+02
TC-99M	1.99E-02	3.89E-02	6.46E-01	0.00E+00	5.66E-01	1.98E-02	2.22E+01
TC-101	2.30E-02	2.41E-02	3.06E-01	0.00E+00	4.11E-01	1.27E-02	7.66E-02
RU-103	1.48E+02	0.00E+00	5.67E+01	0.00E+00	3.72E+02	0.00E+00	3.82E+03
RU-105	1.30E+01	0.00E+00	4.73E+00	0.00E+00	1.15E+02	0.00E+00	8.50E+03
RU-106	2.36E+03	0.00E+00	2.95E+02	0.00E+00	3.19E+03	0.00E+00	3.68E+04
AG-110M	3.46E+02	2.34E+02	1.87E+02	0.00E+00	4.35E+02	0.00E+00	2.78E+04
SB-122	5.80E+01	8.56E-01	1.70E+01	7.43E-01	0.00E+00	2.36E+01	4.46E+03
SB-124	6.55E+02	8.50E+00	2.29E+02	1.44E+00	0.00E+00	3.63E+02	4.09E+03
SB-125	4.22E+02	3.25E+00	8.85E+01	3.91E-01	0.00E+00	2.35E+02	1.01E+03

Table 2 - 3

Site Related Child Ingestion Dose Commitment Factors
(Freshwater Fish and Saltwater Invertebrate Consumption)

(AiT)
mR/hr per uCi/ml

ISOTOPE	BONE	LIVER	TOT BODY	THYROID	KIDNEY	LUNG	GI-LLI
TE-125M	3.81E+03	1.03E+03	5.08E+02	1.07E+03	0.00E+00	0.00E+00	3.68E+03
TE-127M	9.67E+03	2.60E+03	1.15E+03	2.31E+03	2.76E+04	0.00E+00	7.83E+03
TE-127	1.58E+02	4.25E+01	3.38E+01	1.09E+02	4.48E+02	0.00E+00	6.15E+03
TE-129M	1.63E+04	4.55E+03	2.53E+03	5.25E+03	4.78E+04	0.00E+00	1.99E+04
TE-129	4.48E+01	1.25E+01	1.06E+01	3.20E+01	1.31E+02	0.00E+00	2.79E+03
TE-131M	2.41E+03	8.33E+02	8.86E+02	1.71E+03	8.06E+03	0.00E+00	3.38E+04
TE-131	2.78E+01	8.46E+00	8.26E+00	2.12E+01	8.40E+01	0.00E+00	1.46E+02
TE-132	3.38E+03	1.50E+03	1.81E+03	2.18E+03	1.39E+04	0.00E+00	1.51E+04
I-130	6.28E+01	1.27E+02	6.54E+01	1.40E+04	1.90E+02	0.00E+00	5.94E+01
I-131	3.70E+02	3.72E+02	2.12E+02	1.23E+05	6.11E+02	0.00E+00	3.31E+01
I-132	1.72E+01	3.16E+01	1.45E+01	1.47E+03	4.84E+01	0.00E+00	3.72E+01
I-133	1.27E+02	1.58E+02	5.96E+01	2.93E+04	2.63E+02	0.00E+00	6.35E+01
I-134	9.02E+00	1.67E+01	7.70E+00	3.85E+02	2.56E+01	0.00E+00	1.11E+01
I-135	3.77E+01	6.78E+01	3.21E+01	6.00E+03	1.04E+02	0.00E+00	5.16E+01
CS-134	5.15E+04	8.44E+04	1.78E+04	0.00E+00	2.62E+04	9.39E+03	4.55E+02
CS-136	5.17E+03	1.42E+04	9.19E+03	0.00E+00	7.56E+03	1.13E+03	4.99E+02
CS-137	7.19E+04	6.88E+04	1.02E+04	0.00E+00	2.24E+04	8.07E+03	4.31E+02
CS-138	5.01E+01	6.97E+01	4.42E+01	0.00E+00	4.90E+01	5.28E+00	3.21E+01
BA-139	9.34E+00	4.99E-03	2.71E-01	0.00E+00	4.35E-03	2.93E-03	5.39E+02
BA-140	1.87E+03	1.64E+00	1.09E+02	0.00E+00	5.35E-01	9.79E-01	9.50E+02
BA-141	4.51E+00	2.53E-03	1.47E-01	0.00E+00	2.19E-03	1.48E-02	2.57E+00
BA-142	1.97E+00	1.42E-03	1.10E-01	0.00E+00	1.15E-03	8.35E-04	2.57E-02
LA-140	2.16E+00	7.55E-01	2.54E-01	0.00E+00	0.00E+00	0.00E+00	2.10E+04
LA-142	1.12E-01	3.57E-02	1.12E-02	0.00E+00	0.00E+00	0.00E+00	7.08E+03
CE-141	4.65E+00	2.32E+00	3.45E-01	0.00E+00	1.02E+00	0.00E+00	2.90E+03
CE-143	8.19E-01	4.44E+02	6.44E-02	0.00E+00	1.86E-01	0.00E+00	6.51E+03
CE-144	2.44E+02	7.64E+01	1.30E+01	0.00E+00	4.23E+01	0.00E+00	1.99E+04
PR-143	8.40E+00	2.52E+00	4.17E-01	0.00E+00	1.37E+00	0.00E+00	9.06E+03
PR-144	2.76E-02	8.53E-03	1.39E-03	0.00E+00	4.51E-03	0.00E+00	1.84E+01
ND-147	5.96E+00	4.83E+00	3.74E-01	0.00E+00	2.65E+00	0.00E+00	7.65E+03
W-187	4.08E+02	2.42E+02	1.08E+02	0.00E+00	0.00E+00	0.00E+00	3.40E+04
NP-239	5.15E-02	3.70E-03	2.60E-03	0.00E+00	1.07E-02	0.00E+00	2.74E+02
K-40	0.00E+00	0.00E+00	0.00E+00	0.00E+00	0.00E+00	0.00E+00	0.00E+00
CO-57	0.00E+00	1.15E+02	2.33E+02	0.00E+00	0.00E+00	0.00E+00	9.43E+02
SR-85	0.00E+00	0.00E+00	0.00E+00	0.00E+00	0.00E+00	0.00E+00	0.00E+00
Y-88	0.00E+00	0.00E+00	0.00E+00	0.00E+00	0.00E+00	0.00E+00	0.00E+00
NB-94	0.00E+00	0.00E+00	0.00E+00	0.00E+00	0.00E+00	0.00E+00	0.00E+00
NB-97	5.55E-02	1.00E-02	4.68E-03	0.00E+00	1.11E-02	0.00E+00	3.09E+03
CD-109	0.00E+00	0.00E+00	0.00E+00	0.00E+00	0.00E+00	0.00E+00	0.00E+00
SN-113	0.00E+00	0.00E+00	0.00E+00	0.00E+00	0.00E+00	0.00E+00	0.00E+00
BA-133	0.00E+00	0.00E+00	0.00E+00	0.00E+00	0.00E+00	0.00E+00	0.00E+00
TE-134	4.31E+01	1.94E+01	2.59E+01	3.41E+01	1.80E+02	0.00E+00	1.97E+02
CE-139	0.00E+00	0.00E+00	0.00E+00	0.00E+00	0.00E+00	0.00E+00	0.00E+00
HG-203	0.00E+00	0.00E+00	0.00E+00	0.00E+00	0.00E+00	0.00E+00	0.00E+00

Table 2-4

Bio-Accumulation Factors for Liquid Effluent Isotopes
(pCi/kg per pCi/liter)

ISOTOPE	Freshwater Fish BFi	Saltwater Invertebrates BIi	ISOTOPE	Freshwater Fish BFi	Saltwater Invertebrates BIi
H-3	9.000E-01	9.300E-01	TE-125M	4.000E+02	1.000E+02
BE-7	2.000E+00	2.000E+02	TE-127M	4.000E+02	1.000E+02
NA-24	1.000E+02	1.900E-01	TE-127	4.000E+02	1.000E+02
P-32	1.000E+05	3.000E+04	TE-129M	4.000E+02	1.000E+02
CR-51	2.000E+02	2.000E+03	TE-129	4.000E+02	1.000E+02
MN-54	4.000E+02	4.000E+02	TE-131M	4.000E+02	1.000E+02
MN-56	4.000E+02	4.000E+02	TE-131	4.000E+02	1.000E+02
FE-55	1.000E+02	2.000E+04	TE-132	4.000E+02	1.000E+02
FE-59	1.000E+02	2.000E+04	I-130	1.500E+01	5.000E+01
CO-58	5.000E+01	1.000E+03	I-131	1.500E+01	5.000E+01
CO-60	5.000E+01	1.000E+03	I-132	1.500E+01	5.000E+01
NI-63	1.000E+02	2.500E+02	I-133	1.500E+01	5.000E+01
NI-65	1.000E+02	2.500E+02	I-134	1.500E+01	5.000E+01
CU-64	5.000E+01	1.700E+03	I-135	1.500E+01	5.000E+01
ZN-65	2.000E+03	5.000E+04	CS-134	2.240E+02	2.240E+02
ZN-69	2.000E+03	5.000E+04	CS-136	2.240E+02	2.240E+02
BR-83	4.200E+02	3.100E+00	CS-137	2.240E+02	2.240E+02
BR-84	4.200E+02	3.100E+00	CS-138	2.240E+02	2.240E+02
BR-85	4.200E+02	3.100E+00	BA-139	4.000E+00	1.000E+02
RB-86	2.000E+03	1.700E+01	BA-140	4.000E+00	1.000E+02
RB-88	2.000E+03	1.700E+01	BA-141	4.000E+00	1.000E+02
RB-89	2.000E+03	1.700E+01	BA-142	4.000E+00	1.000E+02
SR-89	3.000E+01	2.000E+01	LA-140	2.500E+01	1.000E+03
SR-90	3.000E+01	2.000E+01	LA-142	2.500E+01	1.000E+03
SR-91	3.000E+01	2.000E+01	CE-141	1.000E+00	6.000E+02
SR-92	3.000E+01	2.000E+01	CE-143	1.000E+00	6.000E+02
Y-90	2.500E+01	1.000E+03	CE-144	1.000E+00	6.000E+02
Y-91M	2.500E+01	1.000E+03	PR-143	2.500E+01	1.000E+03
Y-91	2.500E+01	1.000E+03	PR-144	2.500E+01	1.000E+03
Y-92	2.500E+01	1.000E+03	ND-147	2.500E+01	1.000E+03
Y-93	2.500E+01	1.000E+03	W-187	1.200E+03	3.000E+01
ZR-95	3.300E+00	8.000E+01	NP-239	1.000E+01	1.000E+01
ZR-97	3.300E+00	8.000E+01	K-40	0.000E+00	0.000E+00
NB-95	3.000E+02	1.000E+02	CO-57	5.000E+01	1.000E+03
MO-99	1.000E+01	1.000E+01	SR-85	0.000E+00	0.000E+00
TC-99M	1.500E+01	5.000E+01	Y-88	0.000E+00	0.000E+00
TC-101	1.500E+01	5.000E+01	NB-94	3.000E+02	1.000E+02
RU-103	1.000E+01	1.000E+03	NB-97	3.000E+02	1.000E+02
RU-105	1.000E+01	1.000E+03	CD-109	0.000E+00	0.000E+00
RU-106	1.000E+01	1.000E+03	SN-113	0.000E+00	0.000E+00
AG-110M	2.300E+00	3.300E+03	BA-133	0.000E+00	0.000E+00
SB-122	1.000E+00	3.000E+02	TE-134	4.000E+02	1.000E+02
SB-124	1.000E+00	3.000E+02	CE-139	0.000E+00	0.000E+00
SB-125	1.000E+00	3.000E+02	HG-203	0.000E+00	0.000E+00

Bio-Accumulation Factors and DFi's for Noble Gases = 0

Figure 2-1

Radioactive Liquid Waste Effluent System Flow Diagram

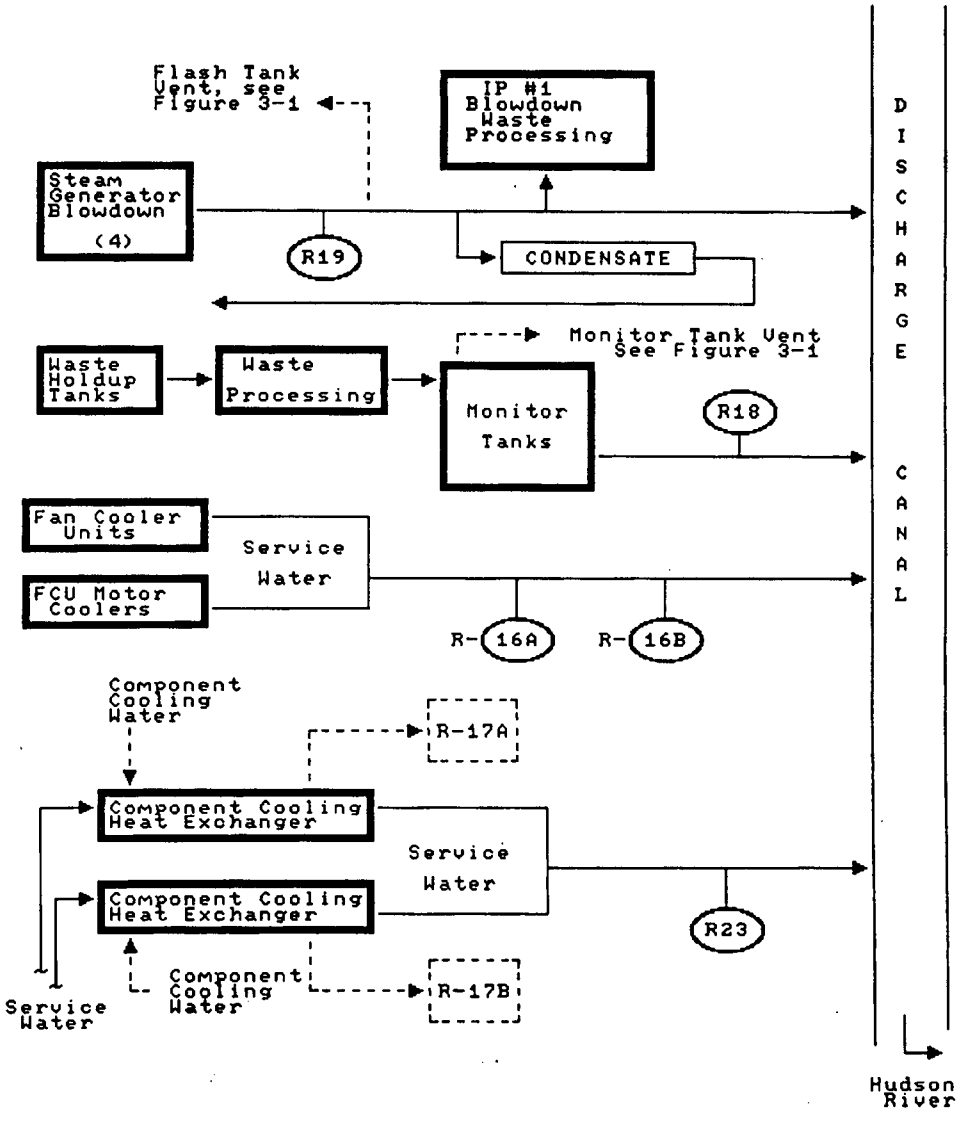

3.0 GASEOUS EFFLUENTS

3.1 Gaseous Effluent Releases - General Information

3.1.1 The surveillance and lower limit of detection requirements for gaseous radioactive effluents are contained in the Radiological Effluent Controls. Lower limits of detection calculations are addressed in Appendix B.

3.1.2 A completed and properly authorized Airborne Radioactive Waste Release Permit shall be issued prior to the release of airborne activity from the waste gas holding system and containment purge. If a containment purge exceeds 150 hours in duration then the purge will be considered a continuous, long term release for reporting purposes (See Section 3.1.16).

3.1.3 Since Indian Point is a two unit site, the derived instantaneous uCi/sec limits delineated in Section 3.2.1 are apportioned to each site. The time-average limits in 3.2.2, 3.2.3, and 3.2.4 are "per reactor" limits and the full dose limits are applicable to IP3.

3.1.4 During cold shutdown, there is no flowpath for a release from the Condenser Air Ejector, and the monthly grab sample described in Radiological Effluent Controls Table 3.4.1-1 is not required. During normal plant operation without a primary to secondary leak, almost all gaseous releases are through the main Plant Vent. A negligible amount may be identified in the Administration Building and Radioactive Machine Shop vents. In the event of extended operation with a primary to secondary leak, low level releases are expected from both the blowdown flash tank vent and condenser air ejector. However, the limits on steam generator leakage are much more restrictive than those for effluent releases. Allocation of portions of the allowable release rate to these various release points is not warranted. If the instantaneous release rate is used (taking advantage of the one hour averaging allowed by 3.3.1 or 3.4.1), then all release points will be considered when establishing the alarm setpoint per section 1.

3.1.5 For releases that are expected to continue for periods over two days, a new release permit will normally be issued each day. Containment purge release permits may be terminated at the discretion of the RES Manager and be considered as a continuous release until the purge is terminated. However, when plant conditions change that will cause the activity in containment to significantly change, a new permit shall be issued.

3.1.6 Assurance that the combined gaseous releases from Units 2 and 3 do not exceed Section 3.2.1 limits for the site is provided by administrative controls agreed to in the Memorandum of Understanding (#16) between Con Edison and the New York Power Authority concerning gaseous effluent discharge and the requirements of the document.

3.1.7 By mutual agreement with Con Edison's IP2NPP Shift Supervisor, one unit can reduce or eliminate discharges for a period of time to allow the other unit to use the full site permissible discharge rate, or a specific portion thereof, for discharge when necessary.

3.1.8 Conservative release rate limitations have been established to aid in controlling time average dose limits. The annual average limit shall normally be used for calculating limitations on discharge. If this limitation unduly restricts an individual release, the quarterly average release rate limit (μCi/sec) may be used for the release provided the quarterly time average dose limit will not be exceeded and the Operations Manager or Assistant Operations Manager is in agreement. The instantaneous limit for release may be used if the Site Executive Officer or his Designee is in agreement. The instantaneous limit should be checked by the Radiological and Environmental Services Department when applied.

When the instantaneous limit is applied, the release may be averaged over a one hour time interval.

3.1.9 Containment Pressure Reliefs

Containment pressure reliefs occur frequently enough to be considered continuous and are sampled from the plant vent release path. However, to ensure that the release rate will not be exceeded, the containment noble gas monitor (R-12) and the expected flowrate are used to calculate a release rate. The effluent noble gas monitor in the plant vent is used to verify these calculations (Ref: NUREG 0472, REV.3, DRAFT 6, TABLE 3.1-13).

3.1.10 Composite Particulate Samples

One of the following methods will be used to obtain a composite sample:

- Samples will be taken weekly and integrated monthly; or
- Samples will be taken weekly and counted together once per month (Ref: NUREG 0472, REV. 3, DRAFT 6, TABLE 4.11-12).

3.1.11 Gas Storage Tank Activity Limit

The noble gas activity limit of 50,000 Ci in the gas storage tanks was calculated using the equations from Section 5.6.1 of NUREG 0133 and the following parameters:

Ki = 294 mrem-m^3/μCi-yr, Xe-133 equivalent Table B-1 (Reg Guide 1.109)

X/Q = 1.03 x 10^{-3} s/m^3, Indian Point 3 FSAR

Qit must be calculated so that the dose is less than 500 mrem in a year:

$$Qit = \frac{(500\ \text{mrem})\ 3.15E7\ \text{s/yr}}{(1E6\mu\text{Ci/Ci})(294\text{mrem m}^3/\mu\text{Ci yr})(1.03E\text{-}3\text{s/m}^3)} = 52{,}011\ \text{Ci};\ \underline{50{,}000\ \text{Ci}}$$

This limit assumes 100% Xe-133 as per NUREG 133. Utilizing the Ki from an expected mixture during RCS degasification (Ki = 787 $\frac{mrem\text{-}m^3}{\mu Ci\text{-}yr}$), the gas tank conservative administrative limit should be 19,400 curies.

The basis for assuring that accidental gas releases from liquid holdup tanks do not exceed Section 3.2.1 limits, is Technical Specifications Appendix A, 3.1.D (≤ 1 uCi/cc Dose Equivalent Iodine-131 in Reactor Coolant). Using the assumptions discussed in FSAR section 14.2.3, the potential total curies in the liquid holdup tanks is limited to less than the conservative limit for the Gas Storage Tanks (19,400 curies).

3.1.12 Gas Storage Tank Surveillance Requirements

There are two methods available to ensure that the activity in the gas storage tank is within the conservative administrative limit (19400 Ci).

$$\frac{1.94E{+}4\ Ci \cdot 1E6\ uCi/Ci}{525\ ft^3 \cdot \left(\frac{164.7\ psia}{14.7\ psia}\right) \cdot 2.83E4\ cc/ft^3} = 1.17E{+}2\ uCi/cc$$

1. The total gaseous activity will normally be limited to less than 117 uCi/cc. If this concentration limit is exceeded, then the contents of the tank will be monitored and actions taken to ensure the 19,400 curie per tank limit is not exceeded.

2. The waste gas line monitor (R-20) reads in uCi/cc. It allows for control of waste gas tank curie content by limiting the input concentration to 117 uCi/cc, thereby limiting the curies to 19,400.

Large gas decay tanks on fill and CVCS tanks (which are indicative of the gas mixture in or from the reuse system) are continuously monitored for H_2 and O_2 through in-line instrumentation. With either in-line instrument out of service, a grab sample of the tank on receipt shall be taken daily, unless in degassing operation, when the periodicity is every four hours.

Other primary system tank cover gases can be manually directed through these instruments for individual samples.

3.1.13 The normal flow rate measurement for the Radioactive Machine Shop (RAMS) and the Plant Vent (PV) is obtained from the installed process monitor. When the instrument is out of service, the estimated flow from the RAMS is obtained by summing each operable exhaust fan's design flow rate. Estimated flow from the PV is obtained similarly, or from an alternate flow instrument (still considered an estimate). The design system flow rate of 12500 CFM is used for Administration Building ventilation. The process flow rate monitor surveillance requirements specified in RECS Table 3.2-1 are not applicable for the Administration Building, nor are they applicable when the RAMS or PV installed instruments are out of service and rated fan flow is used.

3.1.14 The activity released via the blowdown flash tank vent is determined by obtaining the steam generator blowdown Tritium, Noble Gas, and Iodine activity, and applying a partition factor (0.05) for the Iodine releases as listed in Regulatory Guide 1.42 "Interim Licensing Policy On As Low As Practicable for Gaseous Radioiodine Releases from Light Water Cooled Nuclear Power Reactors". (Ref:NUREG 0472, Rev3, DRAFT 6, TABLE 3.3-13).

3.1.15 Carbon 14 is released at a rate of 9.6 curies per GW(e).yr based upon studies performed by the New York State Department of Health at Indian Point 3. This is released in a gaseous form, the primary dose from which is in the CO_2 form. Therefore, these are exempt from the dose limits specified in Sections 2.4.1, 2.4.3 and 2.4.4 of the RECS. The Carbon 14 doses resulting from these releases are calculated in accordance with the methodology in Reg. Guide 1.109 and listed in the Radiological Impact on Man section of the Semi-annual Radioactive Effluent Release Report. This calculation is performed using the fraction of carbon 14 released in the CO_2 form (26%).

3.1.16 Evaluations of previous gas decay tank and containment purge releases have been performed. These evaluations indicate that these "Short Term Releases" (less than 500 hours per year and less than 150 hours per quarter) are sufficiently random to utilize the long term meteorological dispersion factor (NUREG 0133, Section 3.3, Page 8). The short term correction factor, will only be used when non-random releases are to be made, routinely.

3.1.17 The liquid waste monitor tanks have an airborne release pathway. The original plant design limited the gases through this pathway by reducing the entrained gases to less than 2E-3 uCi/ml. The removal of the CVCS gas stripper under modification 86-3-122 CVCS requires the quantification of these gases when the entrained gaseous activity in the monitor tank inlet exceeds 2E-3 uCi/ml. No action is required if the inlet noble gas concentration is less than 2E-3 uCi/ml.

This gas release will be quantified by calculating the difference (in uCi's) between the gaseous activity added to the tank and the gaseous activity present in the effluent release sample. This difference will be quantified as an airborne ground level batch release, using a X/Q of 5.0E-5 sec/m^3. A separate release permit evaluating this release is not required prior to release. Calculation of this rate of release is not required, however the time average dose contribution shall be calculated and controlled per Sections 3.3 and 3.4 of the ODCM. Section 3.6 provides additional detail relative to the finite cloud correction assumptions for this pathway.

3.1.18 Airborne releases from the Steam Generator Safety or Atmospheric Dump Valves can occur during a Primary to Secondary leak. Tritium, Noble Gas, and Iodine release rates are determined using a source term activity (Main Steam or Steam Generator Blowdown), an Iodine partition factor (0.05, as per Section 3.1.14), and a release rate, determined from Engineering Design Calculation 187 (Steam Generator Atmospherics), or design flowrate (from Steam Generator Safeties).

3.1.19 Releases from the steam driven auxiliary feed pump vent (and other abnormal release points) are calculated by obtaining the release rate (corrected for system pressure, as applicable) and source term activity (eg. Main Steam) for Tritium, Noble Gas, and Iodine, partitioned as per Section 3.1.14.

3.2 Gaseous Effluent Dose Calculation Requirements

3.2.1 Section 2.4.1 of the Radiological Effluent Controls requires that the dose rate due to radioactive materials released in gaseous effluents from the site at or beyond the site boundary shall be limited to:

a) For noble gases: Less than or equal to 500 mrem/yr to the total body and less than or equal to 3000 mrem/yr to the skin; and

b) For Iodine 131, Tritium, and for all radioactive materials in particulate form with half lives greater than 8 days: Less than or equal to 1500 mrem/yr to any organ.

The methodologies for performing these calculations are discussed in Sections 3.3.1 and 3.3.2, respectively.

3.2.2 Section 2.4.2 of the Radiological Effluent Controls requires that the air dose due to noble gases released in gaseous effluents from each reactor unit at or beyond the site boundary shall be limited to:

a) During any calendar quarter: Less than or equal to 5 mrad for gamma radiation and less than or equal to 10 mrad for beta radiation.

b) During any calendar year: Less than or equal to 10 mrad for gamma radiation and less than or equal to 20 mrad for beta radiation.

The methodology for calculating these doses is discussed in Section 3.3.3.

NOTE: If either of the above limits is exceeded by a factor of two or more, then cumulative dose contributions from direct radiation would be determined by evaluation of existing perimeter and environmental TLDs per Radiological Effluent Control 2.6.A.

3.2.3 Section 2.4.3 of the Radiological Effluent Controls requires that the dose to a member of the general public from Iodine 131, Tritium, and radionuclides in particulate form (half-lives > 8 days) in gaseous effluents released from each reactor unit shall be limited to:

a) Less than or equal to 7.5 mrem to any organ during a calendar quarter

b) Less than or equal to 15 mrem to any organ during a calendar year.

Cumulative dose contributions for the current calendar quarter and current calendar year shall be determined at least once every 31 days. The methodology for calculating these doses is discussed in Section 3.3.4.

NOTE: If either of the previous limits is exceeded by a factor of two or more, then cumulative dose contributions from direct radiation would be determined by evaluation of existing perimeter and environmental TLDs per Radiological Effluent Control 2.6.A.

3.2.4 Section 2.4.4 of the Radiological Effluent Controls requires that for each reactor unit, the appropriate portions of the gaseous radwaste treatment system shall be used to reduce radioactive effluents in gaseous waste prior to their discharge when projected gaseous effluent air dose at the site boundary when averaged over 31 days, would exceed 0.2 mrad for gamma radiation or 0.4 mrad for beta radiation. These doses are projected based on the dose methodology discussed in Section 3.3.3 (gas) and 3.3.4 (iodine) and the average previous months' doses are used to project future doses.

The appropriate portions of the ventilation exhaust treatment system shall be used to reduce radioactive materials in gaseous releases when the projected doses averaged over 31 days, would not exceed 0.3 mrem to any organ (at nearest residence).

Dose due to gaseous release from the site shall be calculated at least once every 31 days.

3.3 Dose Methodology (Computer Calculation)

3.3.1 Instantaneous Dose Rates - Noble Gas Releases

When the instantaneous limit applies, the process radiation monitor response or release rate can be averaged over a one-hour time interval.

3.3.1.1 The equations developed in this section are used to meet the calculational requirements of paragraph 3.2.1. The magnitude of this pathway is the same for all age groups so there is no critical group. Based on an agreement with Consolidated Edison, IP3NPP utilizes 50% of the site release limit as measured in Ci/sec which translates to 55.4% of the applicable dose rate limit for noble gas releases.

Each unit has different dispersion factors due to their relative positions to the critical sector of the unrestricted area boundary. The conversion from dose rate to Ci/sec was determined with the use of a model which incorporates a finite cloud exposure correction. The methodology is discussed in Section 3.6.

A calculation showing the relationship between Ci/sec. and dose rates from Units 2 and 3 is shown in Appendix 3-A. The equations for calculating the dose rate limitations are obtained from NUREG 0133 (Ref. 1, Section 5.2.1). Utilizing the above assumptions, these equations reduce to the following which are to be summed for each with nuclide. (Note Section 3.1.6 allows use of higher release rates up to the maximum of the allowable maximum permissible discharge rate.)

$[(Ki)*(\overline{X/Q}) * (Qi)] = 275$ mrem/yr whole body;

$[(Li+1.1\ Mi)* (\overline{X/Q}) \times (Qi)] = 1{,}766$ mrem/yr to the skin;

<u>Where</u>:

Ki = The total body dose factor due to gamma emissions for each identified noble gas radionuclide, in mrem/yr per $\mu Ci/m^3$ (finite cloud correction included).

Li = The skin dose factor due to gamma emissions for each identified noble gas radionuclide, in mrem/yr per $\mu Ci/m^3$ (finite cloud correction included).

Mi = The air dose factor due to gamma emissions for each identified noble gas radionuclide, in mrad/yr per $\mu Ci/m^3$ (finite cloud correction included).

Ni = The air dose factor due to beta emissions for each identified noble gas radionuclide, in mrad/yr per $\mu Ci/m^3$.

$\overline{Q}i$ = The release rate of radionuclides, i, an gaseous effluent for all release points in μCi/sec.

$\overline{(X/Q)}$ = For all vent releases, the highest calculated annual averaged relative concentration for any area at the unrestricted area boundary (4.85E-6 sec/m^3), in the SSW sector at 380 meters. (Note: SSW is critical IP3 sector for external gamma radiation exposure.)

The Ki, Li, Mi, and Ni factors were obtained from Table B-1 of Regulatory Guide 1.109 and are included in this document as Tables 3-4, 3-5, 3-6, and 3-7 respectively. The Ki and Mi factors have a finite cloud correction factor included.

3.3.1.2 These equations can also be expressed in the following manner:

$(\bar{K})\ (Qt)\ (\overline{X/Q}) =$ mrem/yr (dose to whole body)

$(\bar{L} + 1.1\ \bar{M})\ (\overline{X/Q})\ (Qt) =$ mrem/yr dose to skin

NOTE: In the following formulas, the product of the release rate times the nuclide specific dose factor are summations over i.

Where:

Qt = The release rate of all noble gases summed together in ith μCi/sec, i.e., the sum of all Qi.

$\bar{K} = (1/Qt)\ (\bar{Q}i)\ (Ki)$

$\bar{L} = (1/Qt)\ (\bar{Q}i)\ (Li)$

$\bar{M} = (1/Qt)\ (\bar{Q}i)\ (Mi)$

$\bar{N} = (1/Qt)\ (\bar{Q}i)\ (Ni)$

NOTE: The summations are from i to n, i being the ith nuclide.

The values of $\bar{K}$, $\bar{L}$, $\bar{M}$, and $\bar{N}$ are listed in Table 3-8 for the unrestricted area boundary.

3.3.2 Instantaneous Dose Rates - I-131, Part w/>8 day t½, and H-3

The equation developed in this section is used to meet the calculational requirements of Paragraph 2.4.1. The critical organ is considered to be the child thyroid as stated in Section 4.0 of the Technical Specifications. Based on a previous agreement with Consolidated Edison, IP3NPP utilizes 50% of the site release limit as measured in Ci/sec which translates to 67.2% of the applicable dose rate limit. This is a result of the different dispersion to the critical sector of the unrestricted area boundary. A calculation showing the relationship between Ci/sec released and dose rates from Units 2 and 3 is shown in Appendix 3-A. The equation for calculating the dose rate limitation is obtained from NUREG 0133 (Ref. 1, Section 5.2.1, Pg. 25). Utilizing the above assumptions, this equation reduces to the following where the sum of:

[(Pi) x (X/Q) x (Qi)] must be less than 1008 mrem/yr

Where:

Pi = The dose parameter for radionuclides other than noble gases for the inhalation pathway in mrem/yr per μCi/m^3. These parameters (calculated in Section 3.3.2.1) are calculated separately for each isotope, age group, and organ.

Qi = The release rate of radionuclide 131 and particulates, i, in gaseous effluents for all release points in μCi/sec.

X/Q = 5.21E-6 sec/m³. The annual average dispersion parameter for the inhalation pathway at the controlling location (350 meters SW) due to all vent releases (see Section 3.5).

3.3.2.1 Calculation of Pi(in): Inhalation Dose Factor

Pi (inhalation) = K' (BR) DFAi (mrem/yr per μCi/m³)

Where:

K' = A constant of conversion, 10^6 pCi/μCi

BR = The breathing rate of each age group as per 3.3.4.5.a (Table E-5 of Reg. Guide 1.109).

DFAi = The inhalation dose factor for each age group, organ, and nuclide, in mrem/pCi. These values are taken from Reg Guide 1.109, Table E-7 through E-9 and are reproduced in Tables 3-1a through 3-1d.

3.3.3 Time Average Dose - Noble Gas Release

3.3.3.1 The equations in this section are used to meet the calculational requirements of Paragraphs 3.2.2 and 3.2.4. All releases at IP3NPP are assumed to be mixed mode unless indicated otherwise. The magnitude for this pathway is the same for all age groups so there is no critical group. Dispersion parameters are discussed in Section 3.5.

3.3.3.2 The equation for calculating the dose limitations are obtained from NUREG 0133 (Ref. 1, Section 5.3). The doses are evaluated at the unrestricted area boundary in the worst meteorological section (SSW sector at 380 meters). These equations reduce to the following (each equation is a summation over each ith radionuclide):

a. During any calendar quarter for gamma radiation:

(3.17×10^{-8}) Mi $[(X/Q)(Qi) + (x/q)(qi) + (x/q_{mt})(qi_{mt})]$, must be less than or equal to 5 mrad.

During any calendar quarter for beta radiation:

(3.17×10^{-8}) Ni $[(X/Q)(Qi) + (x/q)(qi) + (x/q_{mt})(qi_{mt})]$, must be less than or equal to 10 mrad.

b. During any calendar year:

(3.17×10^{-8}) Mi $[(X/Q)(Qi) + (x/q)(qi) + (x/q_{mt})(qi_{mt})]$, must be less than or equal to 10 mrad gamma.

(3.17×10^{-8}) Ni $[(X/Q)(Qi) + (x/q)(qi) + (x/q_{mt})(qi_{mt})]$, must be less than or equal to 20 mrad beta.

<u>Where</u>:

(X/Q) = The highest calculated annual average relative concentration for the unrestricted area boundary in the SSW sector at 380 meters for long term releases (greater than 500 hrs/yr or 150 hrs/qtr or as noted in 3.1.16) 4.85E-6 sec/m³.

(x/q) = The relative concentration for the unrestricted area boundary for short term releases (equal to or less than 500 hrs/yr or 150 hrs/qtr and not random as defined in NUREG 0133, Section 3.3). This value is calculated as per Section 3.5.

(x/q_{mt}) = The relative concentration for the unrestricted area boundary for ground level releases from the monitor tank vents in the SW sector at 350 meters, 5E-5 sec/m³.

Mi = The air dose factor due to gamma emission for each identified noble gas radionuclide in mrad/yr per μCi/m³.

Ni = The air dose factor due to beta emissions for each identified noble gas radionuclide in mrad/yr per μCi/m³.

qi_{mt} = The total releases of noble gas radionuclides in monitor tank vents in uCi. Releases shall be cumulative over the calendar quarter or years as appropriate.

qi = The total release of noble gas radionuclides in gaseous effluents, i, for short term releases (equal to or less than 500 hrs/yr or 150 hrs/qtr and not random as defined in NUREG 0133, Section 3.3) from all vents, in μCi. Releases shall be cumulative over the calendar quarter or year as appropriate.

Qi = The total release of noble gas radionuclides in gaseous effluents, i, for long term releases (greater than 500 hrs/yr or 150 hrs/qtr or as noted in 3.1.16) from all vents in μCi. Releases shall be cumulative over the calendar quarter or year as appropriate.

3.17×10^{-8} = The inverse of the number of seconds in a year.

The air dose factors Mi and Ni were obtained from Table B-1 of Regulatory Guide 1.109 and are listed in Table 3-6 and 3-7 respectively. The M air dose factors are finite cloud corrected.

3.3.4 Time Averaged Dose - Radioiodine 131, Part w/t½ >8 days, and Tritium

3.3.4.1 The equations in this section are used to meet the calculational requirements of Paragraphs 3.2.3 and 3.2.4.

3.3.4.2 The pathways considered in this analysis are inhalation, ground plane, vegetable ingestion, and milk ingestion. The meat ingestion pathway is not considered because of the high degree of commercial, industrial, and residential land usage in the area and the fact that this pathway was not indicated within ten miles of the plant. The inhalation, ground plane, and vegetation ingestion pathways only are assumed to exist at the nearest residence in the worst meteorological sector which is the SSW sector at 1526 meters. Since no real cow exists within 5 miles in the worst downwind sectors, all four (4) pathways will be considered at this secondary receptor.

3.3.4.3 The equations for calculating the dose limitations are obtained from NUREG 0133 (Ref. 1, Section 5.3). These equations reduce to the following (the equations are a summation over each ith radionuclide):

During any calendar quarter:

$(3.17 \times 10^{-8})[Ri(W\ Qi + wqi)]$ must be less than 7.5 mrem

During any calendar year:

$(3.17 \times 10^{-8})[Ri(W\ Qi + wqi)]$ must be less than 15 mrem.

Where:

Qi = The plant releases of radioiodine 131 and radioactive materials in particulate form with half-lives greater than 8 days for long term releases as defined in Section 3.1.16, in μCi. Releases shall be cumulative over the calendar quarter or year as appropriate.

qi = The plant releases of radioiodine 131 and radioactive materials in particulate form with half-lives greater than 8 days for short term releases as defined in Section 3.1.16, in μCi. Releases shall be cumulative over the calendar quarter or year as appropriate.

W = The dispersion or deposition parameter (based on meteorological data defined in Section 3.5) for estimating the dose to an individual at the controlling location for long term releases as defined in Section 3.1.16.

Wn(in) = The highest calculated annual average dispersion parameter for the inhalation pathway for the nearest residence in the unrestricted area located in the SSW sector at 1526 meters, 8.96E-7 sec/m^3.

Wn(dep) = The highest calculated annual average deposition parameter for the nearest residence in the unrestricted area located in the South sector at 1279 meters, 6.14E-9 m^{-2}.

Ws(in) = The calculated annual average dispersion parameter for the inhalation pathway for the secondary receptor located in the highest downwind sectors at 5 miles, 7.22E-7 sec/m^3.

Ws(dep) = The highest calculated annual average deposition parameter for the secondary receptor located in the highest downwind sectors at 5 miles, 1.35E-9 m^{-2}.

w = The vent dispersion or deposition parameter for estimating the dose to an individual at the controlling location for short term releases (as defined in Section 3.1.16) and calculated as in Section 3.5.

3.17×10^{-8} = The inverse number of seconds in a year.

Ri = The dose factor for each identified pathway, organ, and radionuclide, i, in m^2 - mrem/yr per μCi/sec. or mrem/yr per μCi/m^3. These dose factors are determined as described in Sections 3.3.4.5a-d.

3.3.4.4 Utilizing the assumptions contained in Section 3.3.4.3, these equations for the nearest resident and the secondary receptor, respectively, reduce to the following (each equation is a summation over each ith radionuclide):

DN =(3.17E-8) * [Ri(I) * [Wn(in)Qi + wn(in)qi]+

(Ri(G) + Ri(V)) * [Wn(dep)Qi + wn(dep)qi]]

DS =(3.17E-8) * [Ri(I) * [Ws(in)Qi + ws(in)qi]+

(Ri(G) + Ri(c) + Ri(V)) * [Ws(dep)Qi + ws(dep)qi]]

less than or equal to 7.5 mrem Quarterly

less than or equal to 15 mrem Annual

Where DN and DS is the total dose at the nearest residence and secondary receptor, respectively.

NOTE: The subscript s refers to the secondary receptor and the subscript n refers to the nearest residence.

Ri(I): Inhalation pathway factor for each ith radionuclide.

Ri(G): Ground plane pathway factor for each ith radionuclide.

Ri(V): Vegetation pathway factor for each ith radionuclide.

Ri(C): Cow milk pathway factor for each ith radionuclide.

3.3.4.5.a Calculation of Dose Factors

Calculation of Ri(I)(X/Q)Inhalation Pathway Factor

Ri(I) (X/Q) = K'[(BR)a][(DFAi)a](mrem/yr per μCi/m^3)

Where:

K' = Constant of unit conversion, 10^6 pCi/μCi

(BR)a = Breathing rate of the receptor of age group (a) in m^3/yr.

(DFAi)a = The maximum organ inhalation dose factor for the receptor of age group (a) for the ith radionuclide in mrem/pCi. The total body is considered as an organ in the selection of (DFAi)a.

Child and infant inhalation dose factors are generally more restrictive, however, doses from each age group are calculated separately. The (DFAi)a values are listed in Tables 3-1a through 3-1d. The Ri values for the inhalation pathway are listed in Table 3-10a through 3-10d.

Breathing rates: (from Regulatory Guide 1.109, Table E-5)

Infant = 1400 (m^3/yr)

Child = 3700 (m^3/yr)

Adult/Teen= 8000 (m^3/yr)

3.3.4.5.b Calculation of Ri(G)(D/Q) Ground Plane Pathway Factor

$$Ri(G)\ D/Q = \frac{K'K''(SF)(DFGi)(1 - e^{(-kit)})}{Ki} \quad \frac{m^2 \cdot mrem/yr}{uCi/sec}$$

Where:

K' = A constant of conversion, 10^6 pCi/μCi.

K" = A constant of conversion, 8760 hr/yr.

ki = Decay constant for the ith radionuclide sec^{-1}.

t = The exposure time, 4.73 x 10^8 sec (15 years).

DFGi = The ground plane dose conversion factor for ith radionuclide (mrem/hr per pCi/m^2).

SF = Shielding factor (dimensionless) = 0.7 (from Table E-15 of Regulatory Guide 1.109).

The values of DFGi were obtained from Table E-6 of Regulatory Guide 1.109 and are listed in Table 3-2. These values were used to calculate Ri(G), which is the same for all age groups and organs and is listed in Table 3-13.

3.3.4.5.c Calculation of Ri(c)(D/Q) - Grass-Cow-Milk Pathway Factor

Ri(c)(D/Q) =

$$\frac{K(QF)(Uap)(Fm)(r)(DFLi)a}{ki+kw} \cdot \left(\left[\frac{fpfs}{Yp} + \frac{1-fpfs}{Ys} \right] \cdot e^{(-kith)} \right) \cdot e^{(-kitf)}$$

Where:

K' = Constant of conversion, 10^6 pCi/μCi

QF = Cow's consumption rate in kg/day (wet weight)

Uap= Receptor's milk consumption rate for age (a) in liters/yr.

Yp = Agricultural productivity by unit area of pasture grass in kg/m^2.

Ys = Agricultural productivity by unit area of stored feed in kg/m^2.

Fm = Stable element transfer coefficients in days/liters, Table 2-2.

r = Fraction of deposited activity retained on cow's feed grass.

(DFLi)a= The maximum organ ingestion dose for the ith radionuclides for the receptor in age group (a) in mrem/pCi. Values are from Tables E-11 through E-14 of Regulatory Guide 1.109 and are listed in Tables 3-3a through 3-3d.

ki = Decay constant for the radio-nuclide in sec^{-1}.

kw = Decay constant for removal of activity on leaf and plant surfaces by weathering, 5.73E-7 sec^{-1} (corresponding to a 14 day half-life).

tf = The transport time from pasture, to cow, to milk, to receptor in sec.

th = The transport time from pasture, to harvest, to cow, to milk, to receptor, in sec.

fp = Fraction of the year that the cow is on pasture.

fs = Fraction of the cow feed that is pasture grass while the cow is on pasture.

Note: The values of Ri(c) are listed in Table 3-12.

The concentration of Tritium in milk is based on the airborne concentration rather than the deposition. Therefore, the Ri(c) is based on X/Q:

$$Ri(c)(X/Q) = K'K''(Fm)(QF)(Uap)(DFLi)a\ 0.75(0.5/H) \quad (mrem/yr\ per\ \mu Ci/m^3)$$

<u>Where</u>:

K" = A constant of unit conversion, 10^3 m/kg;

H = Absolute humidity of the atmosphere in gm/m^3;

0.75 = The fraction of total feed that is water;

0.5 = The ratio of the specific activity of the feed grass water to the atmospheric water;

Other parameters and values are given above. The value of H may be considered as 8 grams/meter³ (NUREG 0133, PAGE 27) in lieu of site specific information.

Ri(c) Parameters Are Taken From The Following Sources:

Parameter		Value	Table R.G. 1.109
r (dimensionless)		1.0 for radioiodine 0.2 for particulates	E-15 E-15
Fm (days/liter)		Each stable element	E-1
Uap (liters/yr)	- infant	330	E-5
	- child	330	E-5
	- teen	400	E-5
	- adult	310	E-5
(DFLi)a(mrem/pCi)		Each radionuclide	E-11 to E-14
Yp(kg/m²)		0.7	E-15
Ys(kg/m²)		2.0	E-15
tf (seconds)		1.73E5 (2 days)	E-15
th (seconds)		7.78E6 (90 days)	E-15
Qf (kg/day)		50	E-15
fs		Assumed to be unity	
fp		Assumed to be unity	

Stable Element Transfer data is listed in Table 3-2 (Regulatory Guide 1.109, Table E-1). The (DFLi)a values for 4 age groups are given in Tables 3-3a through 3-3d.

3.3.4.5d Calculation of Ri(V)(D/Q) - Vegetation Pathway Factor

$$Ri(V)(D/Q) = \frac{K'(r)}{Yv(ki + kw)} \cdot (DFLi)a \cdot [(UaL)fL \cdot e^{(-kith)} + (UaS)fg \cdot e^{(-kith)}]$$

Where:

K' = Constant of conversion, 10^6pCi/μCi

UaL = Consumption rate of fresh leafy vegetation by the receptor in age group (a) in kg/yr.

UaS = Consumption rate of non-leafy vegetables by the receptor in age group (a) in kg/yr.

fL = The fraction of the annual intake of leafy vegetation grown locally.

fg = The fraction of the annual intake of non-leafy vegetation grown locally.

tL = The average time between harvest of leafy vegetation and its consumption in seconds.

th = The average time between harvest of stored vegetation and its consumption in seconds.

Yv = The vegetation area density in kg/m².

All other factors are defined in the Calculation of Grass-Cow-Milk Pathway Factor Section 3.3.4.5.c of this manual.

The concentration of Tritium in vegetation is based on the airborne concentration rather than the deposition. Therefore, the Ri(V) is based on X/Q:

$$(RiV)(X/Q) = K'K''[(UaL)fL + (UaS)fg](DFLi)a\ (0.75)(0.5/H) \quad \text{(mrem/yr per } \mu\text{Ci/m}^3\text{)}$$

Where all terms are defined in this section or in the grass-cow-milk pathway calculation section of this manual. (DFLi)a for each age group is given in Tables 3-3a through 3-3d. Ri(V) values are listed in Table 3-11a through 3-11d.

Ri(V) Parameters Are From The Following Sources:

Parameter			Value	Table R.G. 1.109
r (dimensionless)			1.0 for radioiodines 0.2 for particulates	E-15
(DFLi)a (mrem/pCi)			Each radionuclide	E-11 to E-14
UaL (kg/yr)	-	infant	0	E-5
	-	child	26	E-5
	-	teen	42	E-5
	-	adult	64	E-5
UaS (kg/yr)	-	infant	0	E-5
	-	child	520	E-5
	-	teen	630	E-5
	-	adult	520	E-5
fL (dimensionless)			1.0	E-15
fg (dimensionless)			0.76	E-15
tL (seconds)			8.6E4 (1 day)	E-15
th (seconds)			5.18E6 (60 days)	E-15
Yv (kg/m²)			2.0	E-15

Table 3-11a

ADULT INGESTION (Leafy Vegetable) Ri(V)

m^2 * mrem/yr per uCi/sec (H-3: mrem/yr per uCi/m^3)

Isotope	BONE	LIVER	TOT BODY	THYROID	KIDNEY	LUNG	GILLI
Te-125m	9.66E+07	3.50E+07	1.29E+07	2.90E+07	3.93E+08	0.00E+00	3.86E+08
Te-127m	3.49E+08	1.25E+08	4.26E+07	8.92E+07	1.42E+09	0.00E+00	1.17E+09
Te-127	5.66E+03	2.03E+03	1.22E+03	4.19E+03	2.31E+04	0.00E+00	4.47E+05
Te-129m	2.51E+08	9.38E+07	3.98E+07	8.63E+07	1.05E+09	0.00E+00	1.27E+09
Te-129	7.62E-04	2.87E-04	1.86E-04	5.85E-04	3.20E-03	0.00E+00	5.75E-04
Te-131m	9.12E+05	4.46E+05	3.72E+05	7.06E+05	4.52E+06	0.00E+00	4.43E+07
Te-131	1.50E-15	6.27E-16	4.74E-16	1.23E-15	6.57E-15	0.00E+00	2.13E-16
Te-132	4.30E+06	2.78E+06	2.61E+06	3.07E+06	2.68E+07	0.00E+00	1.32E+08
I-130	3.92E+05	1.16E+06	4.57E+05	9.81E+07	1.81E+06	0.00E+00	9.96E+05
I-131	8.08E+07	1.16E+08	6.62E+07	3.79E+10	1.98E+08	0.00E+00	3.05E+07
I-132	5.76E+01	1.54E+02	5.39E+01	5.39E+03	2.45E+02	0.00E+00	2.89E+01
I-133	2.09E+06	3.63E+06	1.11E+06	5.33E+08	6.33E+06	0.00E+00	3.26E+06
I-134	9.65E-05	2.62E-04	9.38E-05	4.54E-03	4.17E-04	0.00E+00	2.29E-07
I-135	3.90E+04	1.02E+05	3.77E+04	6.73E+06	1.64E+05	0.00E+00	1.15E+05
Cs-134	4.67E+09	1.11E+10	9.08E+09	0.00E+00	3.59E+09	1.19E+09	1.94E+08
Cs-136	4.24E+07	1.68E+08	1.21E+08	0.00E+00	9.32E+07	1.28E+07	1.90E+07
Cs-137	6.36E+09	8.70E+09	5.70E+09	0.00E+00	2.95E+09	9.81E+08	1.68E+08
Cs-138	3.91E-11	7.73E-11	3.83E-11	0.00E+00	5.68E-11	5.61E-12	3.30E-16
Ba-139	2.68E-02	1.91E-05	7.86E-04	0.00E+00	1.79E-05	1.08E-05	4.76E-02
Ba-140	1.28E+08	1.61E+05	8.38E+06	0.00E+00	5.46E+04	9.20E+04	2.63E+08
Ba-141	1.15E-21	8.70E-25	3.89E-23	0.00E+00	8.09E-25	4.94E-25	5.43E-31
Ba-142	2.46E-39	2.53E-42	1.55E-40	0.00E+00	2.14E-42	1.43E-42	0.00E+00
La-140	1.98E+03	9.98E+02	2.64E+02	0.00E+00	0.00E+00	0.00E+00	7.33E+07
La-142	1.41E-04	6.43E-05	1.60E-05	0.00E+00	0.00E+00	0.00E+00	4.69E-01
Ce-141	1.97E+05	1.33E+05	1.51E+04	0.00E+00	6.19E+04	0.00E+00	5.10E+08
Ce-143	9.98E+02	7.38E+05	8.16E+01	0.00E+00	3.25E+02	0.00E+00	2.76E+07
Ce-144	3.29E+07	1.38E+07	1.77E+06	0.00E+00	8.16E+06	0.00E+00	1.11E+10
Pr-143	6.26E+04	2.51E+04	3.10E+03	0.00E+00	1.45E+04	0.00E+00	2.74E+08
Pr-144	3.09E-26	1.28E-26	1.57E-27	0.00E+00	7.23E-27	0.00E+00	4.44E-33
Nd-147	3.33E+04	3.85E+04	2.31E+03	0.00E+00	2.25E+04	0.00E+00	1.85E+08
W-187	3.82E+04	3.19E+04	1.12E+04	0.00E+00	0.00E+00	0.00E+00	1.05E+07
Np-239	1.43E+03	1.41E+02	7.76E+01	0.00E+00	4.39E+02	0.00E+00	2.89E+07
K-40	0.00E+00	0.00E+00	0.00E+00	0.00E+00	0.00E+00	0.00E+00	0.00E+00
Co-57	0.00E+00	1.17E+07	1.95E+07	0.00E+00	0.00E+00	0.00E+00	2.97E+08
Sr-85	0.00E+00	0.00E+00	0.00E+00	0.00E+00	0.00E+00	0.00E+00	0.00E+00
Y-88	0.00E+00	0.00E+00	0.00E+00	0.00E+00	0.00E+00	0.00E+00	0.00E+00
Nb-94	0.00E+00	0.00E+00	0.00E+00	0.00E+00	0.00E+00	0.00E+00	0.00E+00
Nb-97	2.15E-06	5.45E-07	1.99E-07	0.00E+00	6.35E-07	0.00E+00	2.01E-03
Cd-109	0.00E+00	0.00E+00	0.00E+00	0.00E+00	0.00E+00	0.00E+00	0.00E+00
Sn-113	0.00E+00	0.00E+00	0.00E+00	0.00E+00	0.00E+00	0.00E+00	0.00E+00
Ba-133	0.00E+00	0.00E+00	0.00E+00	0.00E+00	0.00E+00	0.00E+00	0.00E+00
Te-134	3.56E-08	2.33E-08	1.43E-08	3.11E-08	2.25E-07	0.00E+00	3.95E-11
Ce-139	0.00E+00	0.00E+00	0.00E+00	0.00E+00	0.00E+00	0.00E+00	0.00E+00
Hg-203	0.00E+00	0.00E+00	0.00E+00	0.00E+00	0.00E+00	0.00E+00	0.00E+00

Table 3-11b

TEEN INGESTION (Leafy Vegetable) Ri(V)

m^2 * mrem/yr per uCi/sec (H-3: mrem/yr per uCi/m^3)

Isotope	BONE	LIVER	TOT BODY	THYROID	KIDNEY	LUNG	GILLI
H-3	0.00E+00	2.59E+03	2.59E+03	2.59E+03	2.59E+03	2.59E+03	2.59E+03
Be-7	1.43E+05	3.20E+05	1.60E+05	0.00E+00	3.39E+05	0.00E+00	3.90E+07
Na-24	2.39E+05	2.39E+05	2.39E+05	2.39E+05	2.39E+05	2.39E+05	2.39E+05
P-32	1.61E+09	9.97E+07	6.24E+07	0.00E+00	0.00E+00	0.00E+00	1.35E+08
Cr-51	0.00E+00	0.00E+00	6.17E+04	3.43E+04	1.35E+04	8.81E+04	1.04E+07
Mn-54	0.00E+00	4.54E+08	9.01E+07	0.00E+00	1.36E+08	0.00E+00	9.32E+08
Mn-56	0.00E+00	1.43E+01	2.55E+00	0.00E+00	1.81E+01	0.00E+00	9.44E+02
Fe-55	3.26E+08	2.31E+08	5.39E+07	0.00E+00	0.00E+00	1.47E+08	1.00E+08
Fe-59	1.79E+08	4.18E+08	1.61E+08	0.00E+00	0.00E+00	1.32E+08	9.88E+08
Co-58	0.00E+00	4.36E+07	1.00E+08	0.00E+00	0.00E+00	0.00E+00	6.01E+08
Co-60	0.00E+00	2.49E+08	5.60E+08	0.00E+00	0.00E+00	0.00E+00	3.24E+09
Ni-63	1.61E+10	1.13E+09	5.45E+08	0.00E+00	0.00E+00	0.00E+00	1.81E+08
Ni-65	5.72E+01	7.31E+00	3.33E+00	0.00E+00	0.00E+00	0.00E+00	3.97E+02
Cu-64	0.00E+00	8.34E+03	3.92E+03	0.00E+00	2.11E+04	0.00E+00	6.47E+05
Zn-65	4.24E+08	1.47E+09	6.86E+08	0.00E+00	9.42E+08	0.00E+00	6.23E+08
Zn-69	8.18E-06	1.56E-05	1.09E-06	0.00E+00	1.02E-05	0.00E+00	2.87E-05
Br-83	0.00E+00	0.00E+00	2.91E+00	0.00E+00	0.00E+00	0.00E+00	0.00E+00
Br-84	0.00E+00	0.00E+00	2.25E-11	0.00E+00	0.00E+00	0.00E+00	0.00E+00
Br-85	0.00E+00	0.00E+00	0.00E+00	0.00E+00	0.00E+00	0.00E+00	0.00E+00
Rb-86	0.00E+00	2.74E+08	1.29E+08	0.00E+00	0.00E+00	0.00E+00	4.05E+07
Rb-88	0.00E+00	3.17E-22	1.69E-22	0.00E+00	0.00E+00	0.00E+00	2.71E-29
Rb-89	0.00E+00	1.25E-26	8.82E-27	0.00E+00	0.00E+00	0.00E+00	1.91E-35
Sr-89	1.51E+10	0.00E+00	4.33E+08	0.00E+00	0.00E+00	0.00E+00	1.80E+09
Sr-90	7.51E+11	0.00E+00	1.85E+11	0.00E+00	0.00E+00	0.00E+00	2.11E+10
Sr-91	2.85E+05	0.00E+00	1.13E+04	0.00E+00	0.00E+00	0.00E+00	1.29E+06
Sr-92	3.97E+02	0.00E+00	1.69E+01	0.00E+00	0.00E+00	0.00E+00	1.01E+04
Y-90	1.24E+04	0.00E+00	3.34E+02	0.00E+00	0.00E+00	0.00E+00	1.02E+08
Y-91m	4.86E-09	0.00E+00	1.86E-10	0.00E+00	0.00E+00	0.00E+00	2.29E-07
Y-91	7.84E+06	0.00E+00	2.10E+05	0.00E+00	0.00E+00	0.00E+00	3.21E+09
Y-92	8.60E-01	0.00E+00	2.49E-02	0.00E+00	0.00E+00	0.00E+00	2.36E+04
Y-93	1.59E+02	0.00E+00	4.36E+00	0.00E+00	0.00E+00	0.00E+00	4.86E+06
Zr-95	1.72E+06	5.43E+05	3.73E+05	0.00E+00	7.98E+05	0.00E+00	1.25E+09
Zr-97	3.12E+02	6.18E+01	2.85E+01	0.00E+00	9.37E+01	0.00E+00	1.67E+07
Nb-95	1.93E+05	1.07E+05	5.89E+04	0.00E+00	1.04E+05	0.00E+00	4.57E+08
Mo-99	0.00E+00	5.65E+06	1.08E+06	0.00E+00	1.29E+07	0.00E+00	1.01E+07
Tc-99m	2.74E+00	7.63E+00	9.89E+01	0.00E+00	1.14E+02	4.24E+00	5.01E+03
Tc-101	7.64E-31	1.09E-30	1.07E-29	0.00E+00	1.97E-29	6.62E-31	1.86E-37
Ru-103	6.81E+06	0.00E+00	2.91E+06	0.00E+00	2.40E+07	0.00E+00	5.69E+08
Ru-105	5.00E+01	0.00E+00	1.94E+01	0.00E+00	6.31E+02	0.00E+00	4.04E+04
Ru-106	3.10E+08	0.00E+00	3.90E+07	0.00E+00	5.97E+08	0.00E+00	1.48E+10
Ag-110m	1.52E+07	1.43E+07	8.72E+06	0.00E+00	2.74E+07	0.00E+00	4.03E+09
Sb-122	3.03E+05	5.89E+03	8.85E+04	3.85E+03	0.00E+00	1.89E+05	6.35E+07
Sb-124	1.54E+08	2.84E+06	6.02E+07	3.50E+05	0.00E+00	1.34E+08	3.11E+09
Sb-125	2.14E+08	2.34E+06	5.00E+07	2.04E+05	0.00E+00	1.86E+08	1.66E+09

Table 3-11b

TEEN INGESTION (Leafy Vegetable) Ri(V)

m^2 * mrem/yr per uCi/sec (H-3: mrem/yr per uCi/m^3)

Isotope	BONE	LIVER	TOT BODY	THYROID	KIDNEY	LUNG	GILLI
Te-125m	1.48E+08	5.34E+07	1.98E+07	4.14E+07	0.00E+00	0.00E+00	4.37E+08
Te-127m	5.51E+08	1.96E+08	6.56E+07	1.31E+08	2.24E+09	0.00E+00	1.37E+09
Te-127	5.34E+03	1.89E+03	1.15E+03	3.68E+03	2.16E+04	0.00E+00	4.12E+05
Te-129m	3.62E+08	1.34E+08	5.73E+07	1.17E+08	1.51E+09	0.00E+00	1.36E+09
Te-129	7.14E-04	2.66E-04	1.74E-04	5.10E-04	3.00E-03	0.00E+00	3.90E-03
Te-131m	8.44E+05	4.05E+05	3.38E+05	6.09E+05	4.22E+06	0.00E+00	3.25E+07
Te-131	1.39E-15	5.75E-16	4.36E-16	1.07E-15	6.10E-15	0.00E+00	1.14E-16
Te-132	3.91E+06	2.47E+06	2.33E+06	2.61E+06	2.37E+07	0.00E+00	7.84E+07
I-130	3.51E+05	1.01E+06	4.05E+05	8.28E+07	1.56E+06	0.00E+00	7.80E+05
I-131	7.69E+07	1.08E+08	5.78E+07	3.14E+10	1.85E+08	0.00E+00	2.13E+07
I-132	5.19E+01	1.36E+02	4.88E+01	4.58E+03	2.14E+02	0.00E+00	5.92E+01
I-133	1.94E+06	3.29E+06	1.00E+06	4.59E+08	5.76E+06	0.00E+00	2.49E+06
I-134	8.73E-05	2.31E-04	8.31E-05	3.85E-03	3.65E-04	0.00E+00	3.05E-06
I-135	3.52E+04	9.07E+04	3.36E+04	5.83E+06	1.43E+05	0.00E+00	1.00E+05
Cs-134	7.10E+09	1.67E+10	7.75E+09	0.00E+00	5.31E+09	2.03E+09	2.08E+08
Cs-136	4.34E+07	1.71E+08	1.15E+08	0.00E+00	9.30E+07	1.47E+07	1.37E+07
Cs-137	1.01E+10	1.35E+10	4.69E+09	0.00E+00	4.59E+09	1.78E+09	1.92E+08
Cs-138	3.61E-11	6.93E-11	3.47E-11	0.00E+00	5.12E-11	5.96E-12	3.15E-14
Ba-139	2.52E-02	1.78E-05	7.35E-04	0.00E+00	1.67E-05	1.22E-05	2.25E-01
Ba-140	1.37E+08	1.68E+05	8.85E+06	0.00E+00	5.70E+04	1.13E+05	2.12E+08
Ba-141	1.08E-21	8.04E-25	3.59E-23	0.00E+00	7.46E-25	5.50E-25	2.29E-27
Ba-142	2.27E-39	2.27E-42	1.40E-40	0.00E+00	1.92E-42	1.51E-42	0.00E+00
La-140	1.81E+03	8.89E+02	2.37E+02	0.00E+00	0.00E+00	0.00E+00	5.11E+07
La-142	1.30E-04	5.76E-05	1.43E-05	0.00E+00	0.00E+00	0.00E+00	1.75E+00
Ce-141	2.83E+05	1.89E+05	2.17E+04	0.00E+00	8.89E+04	0.00E+00	5.40E+08
Ce-143	9.33E+02	6.79E+05	7.58E+01	0.00E+00	3.04E+02	0.00E+00	2.04E+07
Ce-144	5.27E+07	2.18E+07	2.83E+06	0.00E+00	1.30E+07	0.00E+00	1.33E+10
Pr-143	7.00E+04	2.80E+04	3.49E+03	0.00E+00	1.63E+04	0.00E+00	2.30E+08
Pr-144	2.89E-26	1.18E-26	1.47E-27	0.00E+00	6.80E-27	0.00E+00	3.19E-29
Nd-147	3.62E+04	3.94E+04	2.36E+03	0.00E+00	2.31E+04	0.00E+00	1.42E+08
W-187	3.55E+04	2.90E+04	1.02E+04	0.00E+00	0.00E+00	0.00E+00	7.84E+06
Np-239	1.39E+03	1.31E+02	7.28E+01	0.00E+00	4.11E+02	0.00E+00	2.11E+07
K-40	0.00E+00	0.00E+00	0.00E+00	0.00E+00	0.00E+00	0.00E+00	0.00E+00
Co-57	0.00E+00	1.79E+07	3.00E+07	0.00E+00	0.00E+00	0.00E+00	3.33E+08
Sr-85	0.00E+00	0.00E+00	0.00E+00	0.00E+00	0.00E+00	0.00E+00	0.00E+00
Y-88	0.00E+00	0.00E+00	0.00E+00	0.00E+00	0.00E+00	0.00E+00	0.00E+00
Nb-94	0.00E+00	0.00E+00	0.00E+00	0.00E+00	0.00E+00	0.00E+00	0.00E+00
Nb-97	2.00E-06	4.95E-07	1.81E-07	0.00E+00	5.79E-07	0.00E+00	1.18E-02
Cd-109	0.00E+00	0.00E+00	0.00E+00	0.00E+00	0.00E+00	0.00E+00	0.00E+00
Sn-113	0.00E+00	0.00E+00	0.00E+00	0.00E+00	0.00E+00	0.00E+00	0.00E+00
Ba-133	0.00E+00	0.00E+00	0.00E+00	0.00E+00	0.00E+00	0.00E+00	0.00E+00
Te-134	3.23E-08	2.07E-08	2.17E-08	2.65E-08	1.98E-07	0.00E+00	1.20E-09
Ce-139	0.00E+00	0.00E+00	0.00E+00	0.00E+00	0.00E+00	0.00E+00	0.00E+00
Hg-203	0.00E+00	0.00E+00	0.00E+00	0.00E+00	0.00E+00	0.00E+00	0.00E+00

Table 3-11c

CHILD INGESTION (Leafy Vegetable) Ri(V)

m^2 * mrem/yr per uCi/sec (H-3: mrem/yr per uCi/m^3)

Isotope	BONE	LIVER	TOT BODY	THYROID	KIDNEY	LUNG	GILLI
H-3	0.00E+00	4.01E+03	4.01E+03	4.01E+03	4.01E+03	4.01E+03	4.01E+03
Be-7	3.37E+05	5.72E+05	3.77E+05	0.00E+00	5.63E+05	0.00E+00	3.20E+07
Na-24	3.73E+05	3.73E+05	3.73E+05	3.73E+05	3.73E+05	3.73E+05	3.73E+05
P-32	3.37E+09	1.58E+08	1.30E+08	0.00E+00	0.00E+00	0.00E+00	9.31E+07
Cr-51	0.00E+00	0.00E+00	1.17E+05	6.50E+04	1.78E+04	1.19E+05	6.21E+06
Mn-54	0.00E+00	6.65E+08	1.77E+08	0.00E+00	1.86E+08	0.00E+00	5.58E+08
Mn-56	0.00E+00	1.88E+01	4.24E+00	0.00E+00	2.27E+01	0.00E+00	2.72E+03
Fe-55	8.01E+08	4.25E+08	1.32E+08	0.00E+00	0.00E+00	2.40E+08	7.87E+07
Fe-59	3.97E+08	6.42E+08	3.20E+08	0.00E+00	0.00E+00	1.86E+08	6.68E+08
Co-58	0.00E+00	6.44E+07	1.97E+08	0.00E+00	0.00E+00	0.00E+00	3.76E+08
Co-60	0.00E+00	3.78E+08	1.12E+09	0.00E+00	0.00E+00	0.00E+00	2.10E+09
Ni-63	3.95E+10	2.11E+09	1.34E+09	0.00E+00	0.00E+00	0.00E+00	1.42E+08
Ni-65	1.05E+02	9.89E+00	5.77E+00	0.00E+00	0.00E+00	0.00E+00	1.21E+03
Cu-64	0.00E+00	1.10E+04	6.64E+03	0.00E+00	2.66E+04	0.00E+00	5.16E+05
Zn-65	8.12E+08	2.16E+09	1.35E+09	0.00E+00	1.36E+09	0.00E+00	3.80E+08
Zn-69	1.51E-05	2.18E-05	2.02E-06	0.00E+00	1.32E-05	0.00E+00	1.37E-03
Br-83	0.00E+00	0.00E+00	5.37E+00	0.00E+00	0.00E+00	0.00E+00	0.00E+00
Br-84	0.00E+00	0.00E+00	3.82E-11	0.00E+00	0.00E+00	0.00E+00	0.00E+00
Br-85	0.00E+00	0.00E+00	0.00E+00	0.00E+00	0.00E+00	0.00E+00	0.00E+00
Rb-86	0.00E+00	4.52E+08	2.78E+08	0.00E+00	0.00E+00	0.00E+00	2.91E+07
Rb-88	0.00E+00	4.37E-22	3.04E-22	0.00E+00	0.00E+00	0.00E+00	2.15E-23
Rb-89	0.00E+00	1.64E-26	1.46E-26	0.00E+00	0.00E+00	0.00E+00	1.43E-28
Sr-89	3.59E+10	0.00E+00	1.03E+09	0.00E+00	0.00E+00	0.00E+00	1.39E+09
Sr-90	1.24E+12	0.00E+00	3.15E+11	0.00E+00	0.00E+00	0.00E+00	1.67E+10
Sr-91	5.24E+05	0.00E+00	1.98E+04	0.00E+00	0.00E+00	0.00E+00	1.16E+06
Sr-92	7.28E+02	0.00E+00	2.92E+01	0.00E+00	0.00E+00	0.00E+00	1.38E+04
Y-90	2.30E+04	0.00E+00	6.17E+02	0.00E+00	0.00E+00	0.00E+00	6.56E+07
Y-91m	8.91E-09	0.00E+00	3.24E-10	0.00E+00	0.00E+00	0.00E+00	1.74E-05
Y-91	1.86E+07	0.00E+00	4.99E+05	0.00E+00	0.00E+00	0.00E+00	2.48E+09
Y-92	1.58E+00	0.00E+00	4.53E-02	0.00E+00	0.00E+00	0.00E+00	4.58E+04
Y-93	2.93E+02	0.00E+00	8.04E+00	0.00E+00	0.00E+00	0.00E+00	4.37E+06
Zr-95	3.86E+06	8.48E+05	7.55E+05	0.00E+00	1.21E+06	0.00E+00	8.84E+08
Zr-97	5.70E+02	8.24E+01	4.86E+01	0.00E+00	1.18E+02	0.00E+00	1.25E+07
Nb-95	4.12E+05	1.60E+05	1.15E+05	0.00E+00	1.51E+05	0.00E+00	2.97E+08
Mo-99	0.00E+00	7.71E+06	1.91E+06	0.00E+00	1.65E+07	0.00E+00	6.38E+06
Tc-99m	4.71E+00	9.24E+00	1.53E+02	0.00E+00	1.34E+02	4.69E+00	5.26E+03
Tc-101	1.41E-30	1.47E-30	1.87E-29	0.00E+00	2.51E-29	7.78E-31	4.68E-30
Ru-103	1.53E+07	0.00E+00	5.88E+06	0.00E+00	3.85E+07	0.00E+00	3.96E+08
Ru-105	9.16E+01	0.00E+00	3.32E+01	0.00E+00	8.05E+02	0.00E+00	5.98E+04
Ru-106	7.45E+08	0.00E+00	9.30E+07	0.00E+00	1.01E+09	0.00E+00	1.16E+10
Ag-110m	3.21E+07	2.17E+07	1.73E+07	0.00E+00	4.04E+07	0.00E+00	2.58E+09
Sb-122	5.58E+05	8.24E+03	1.64E+05	7.16E+03	0.00E+00	2.27E+05	4.30E+07
Sb-124	3.52E+08	4.56E+06	1.23E+08	7.73E+05	0.00E+00	1.95E+08	2.20E+09
Sb-125	4.99E+08	3.84E+06	1.05E+08	4.63E+05	0.00E+00	2.78E+08	1.19E+09

Table 3-11c

CHILD INGESTION (Leafy Vegetable) Ri(V)

m^2 * mrem/yr per uCi/sec (H-3: mrem/yr per uCi/m^3)

Isotope	BONE	LIVER	TOT BODY	THYROID	KIDNEY	LUNG	GILLI
Te-125m	3.51E+08	9.50E+07	4.67E+07	9.84E+07	0.00E+00	0.00E+00	3.38E+08
Te-127m	1.32E+09	3.56E+08	1.57E+08	3.16E+08	3.77E+09	0.00E+00	1.07E+09
Te-127	9.85E+03	2.65E+03	2.11E+03	6.81E+03	2.80E+04	0.00E+00	3.85E+05
Te-129m	8.41E+08	2.35E+08	1.31E+08	2.71E+08	2.47E+09	0.00E+00	1.03E+09
Te-129	1.32E-03	3.69E-04	3.14E-04	9.43E-04	3.87E-03	0.00E+00	8.23E-02
Te-131m	1.54E+06	5.33E+05	5.68E+05	1.10E+06	5.16E+06	0.00E+00	2.16E+07
Te-131	2.57E-15	7.83E-16	7.64E-16	1.97E-15	7.77E-15	0.00E+00	1.35E-14
Te-132	7.00E+06	3.10E+06	3.74E+06	4.51E+06	2.88E+07	0.00E+00	3.12E+07
I-130	6.16E+05	1.24E+06	6.41E+05	1.37E+08	1.86E+06	0.00E+00	5.82E+05
I-131	1.43E+08	1.44E+08	8.17E+07	4.75E+10	2.36E+08	0.00E+00	1.28E+07
I-132	9.22E+01	1.69E+02	7.79E+01	7.86E+03	2.59E+02	0.00E+00	1.99E+02
I-133	3.53E+06	4.37E+06	1.65E+06	8.11E+08	7.28E+06	0.00E+00	1.76E+06
I-134	1.55E-04	2.88E-04	1.32E-04	6.62E-03	4.40E-04	0.00E+00	1.91E-04
I-135	6.26E+04	1.13E+05	5.33E+04	9.97E+06	1.73E+05	0.00E+00	8.58E+04
Cs-134	1.60E+10	2.63E+10	5.55E+09	0.00E+00	8.15E+09	2.93E+09	1.42E+08
Cs-136	8.17E+07	2.25E+08	1.45E+08	0.00E+00	1.20E+08	1.78E+07	7.90E+06
Cs-137	2.39E+10	2.29E+10	3.38E+09	0.00E+00	7.46E+09	2.68E+09	1.43E+08
Cs-138	6.57E-11	9.13E-11	5.79E-11	0.00E+00	6.43E-11	6.91E-12	4.21E-11
Ba-139	4.65E-02	2.48E-05	1.35E-03	0.00E+00	2.17E-05	1.46E-05	2.69E+00
Ba-140	2.75E+08	2.41E+05	1.60E+07	0.00E+00	7.84E+04	1.44E+05	1.39E+08
Ba-141	1.99E-21	1.11E-24	6.47E-23	0.00E+00	9.62E-25	6.53E-24	1.13E-21
Ba-142	4.11E-39	2.96E-42	2.29E-40	0.00E+00	2.39E-42	1.74E-42	5.36E-41
La-140	3.25E+03	1.14E+03	3.83E+02	0.00E+00	0.00E+00	0.00E+00	3.17E+07
La-142	2.35E-04	7.49E-05	2.35E-05	0.00E+00	0.00E+00	0.00E+00	1.48E+01
Ce-141	6.56E+05	3.27E+05	4.86E+04	0.00E+00	1.43E+05	0.00E+00	4.08E+08
Ce-143	1.72E+03	9.31E+05	1.35E+02	0.00E+00	3.91E+02	0.00E+00	1.36E+07
Ce-144	1.27E+08	3.98E+07	6.78E+06	0.00E+00	2.21E+07	0.00E+00	1.04E+10
Pr-143	1.46E+05	4.37E+04	7.23E+03	0.00E+00	2.37E+04	0.00E+00	1.57E+08
Pr-144	5.37E-26	1.66E-26	2.70E-27	0.00E+00	8.79E-27	0.00E+00	3.58E-23
Nd-147	7.15E+04	5.79E+04	4.48E+03	0.00E+00	3.18E+04	0.00E+00	9.17E+07
W-187	6.47E+04	3.83E+04	1.72E+04	0.00E+00	0.00E+00	0.00E+00	5.38E+06
Np-239	2.57E+03	1.84E+02	1.29E+02	0.00E+00	5.33E+02	0.00E+00	1.36E+07
K-40	0.00E+00	0.00E+00	0.00E+00	0.00E+00	0.00E+00	0.00E+00	0.00E+00
Co-57	0.00E+00	2.99E+07	6.04E+07	0.00E+00	0.00E+00	0.00E+00	2.45E+08
Sr-85	0.00E+00	0.00E+00	0.00E+00	0.00E+00	0.00E+00	0.00E+00	0.00E+00
Y-88	0.00E+00	0.00E+00	0.00E+00	0.00E+00	0.00E+00	0.00E+00	0.00E+00
Nb-94	0.00E+00	0.00E+00	0.00E+00	0.00E+00	0.00E+00	0.00E+00	0.00E+00
Nb-97	3.64E-06	6.57E-07	3.07E-07	0.00E+00	7.29E-07	0.00E+00	2.03E-01
Cd-109	0.00E+00	0.00E+00	0.00E+00	0.00E+00	0.00E+00	0.00E+00	0.00E+00
Sn-113	0.00E+00	0.00E+00	0.00E+00	0.00E+00	0.00E+00	0.00E+00	0.00E+00
Ba-133	0.00E+00	0.00E+00	0.00E+00	0.00E+00	0.00E+00	0.00E+00	0.00E+00
Te-134	5.76E-08	2.59E-08	3.46E-08	4.56E-08	2.40E-07	0.00E+00	2.63E-07
Ce-139	0.00E+00	0.00E+00	0.00E+00	0.00E+00	0.00E+00	0.00E+00	0.00E+00
Hg-203	0.00E+00	0.00E+00	0.00E+00	0.00E+00	0.00E+00	0.00E+00	0.00E+00

Table 3-12a

ADULT GRASS/COW/MILK PATHWAY Ri(C)

m^2 * mrem/yr per uCi/sec (H-3: mrem/yr per uCi/m^3)

Isotope	BONE	LIVER	TOT BODY	THYROID	KIDNEY	LUNG	GILLI
H-3	0.00E+00	7.63E+02	7.63E+02	7.63E+02	7.63E+02	7.63E+02	7.63E+02
Be-7	1.65E+03	3.73E+03	1.85E+03	0.00E+00	3.92E+03	0.00E+00	6.44E+05
Na-24	2.44E+06	2.44E+06	2.44E+06	2.44E+06	2.44E+06	2.44E+06	2.44E+06
P-32	1.71E+10	1.06E+09	6.61E+08	0.00E+00	0.00E+00	0.00E+00	1.92E+09
Cr-51	0.00E+00	0.00E+00	2.86E+04	1.71E+04	6.30E+03	3.79E+04	7.19E+06
Mn-54	0.00E+00	8.41E+06	1.61E+06	0.00E+00	2.50E+06	0.00E+00	2.58E+07
Mn-56	0.00E+00	4.15E-03	7.36E-04	0.00E+00	5.27E-03	0.00E+00	1.32E-01
Fe-55	2.51E+07	1.74E+07	4.05E+06	0.00E+00	0.00E+00	9.68E+06	9.95E+06
Fe-59	2.97E+07	[illegible]98E+07	2.67E+07	0.00E+00	0.00E+00	1.95E+07	2.33E+08
Co-58	0.00E+00	4.71E+06	1.06E+07	0.00E+00	0.00E+00	0.00E+00	9.55E+07
Co-60	0.00E+00	1.64E+07	3.62E+07	0.00E+00	0.00E+00	0.00E+00	3.08E+08
Ni-63	6.73E+09	4.66E+08	2.26E+08	0.00E+00	0.00E+00	0.00E+00	9.73E+07
Ni-65	3.70E-01	4.81E-02	2.19E-02	0.00E+00	0.00E+00	0.00E+00	1.22E+00
Cu-64	0.00E+00	2.38E+04	1.12E+04	0.00E+00	6.01E+04	0.00E+00	2.03E+06
Zn-65	1.37E+09	4.36E+09	1.97E+09	0.00E+00	2.92E+09	0.00E+00	2.75E+09
Zn-69	5.18E-12	9.91E-12	6.89E-13	0.00E+00	6.44E-12	0.00E+00	1.49E-12
Br-83	0.00E+00	0.00E+00	9.72E-02	0.00E+00	0.00E+00	0.00E+00	1.40E-01
Br-84	0.00E+00	0.00E+00	1.61E-23	0.00E+00	0.00E+00	0.00E+00	1.26E-28
Br-85	0.00E+00	0.00E+00	0.00E+00	0.00E+00	0.00E+00	0.00E+00	0.00E+00
Rb-86	0.00E+00	2.59E+09	1.21E+09	0.00E+00	0.00E+00	0.00E+00	5.12E+08
Rb-88	0.00E+00	0.00E+00	0.00E+00	0.00E+00	0.00E+00	0.00E+00	0.00E+00
Rb-89	0.00E+00	0.00E+00	0.00E+00	0.00E+00	0.00E+00	0.00E+00	0.00E+00
Sr-89	1.45E+09	0.00E+00	4.16E+07	0.00E+00	0.00E+00	0.00E+00	2.33E+08
Sr-90	4.68E+10	0.00E+00	1.15E+10	0.00E+00	0.00E+00	0.00E+00	1.35E+09
Sr-91	2.89E+04	0.00E+00	1.17E+03	0.00E+00	0.00E+00	0.00E+00	1.38E+05
Sr-92	4.88E-01	0.00E+00	2.11E-02	0.00E+00	0.00E+00	0.00E+00	9.68E+00
Y-90	7.07E+01	0.00E+00	1.90E+00	0.00E+00	0.00E+00	0.00E+00	7.49E+05
Y-91m	5.98E-20	0.00E+00	2.32E-21	0.00E+00	0.00E+00	0.00E+00	1.76E-19
Y-91	8.59E+03	0.00E+00	2.30E+02	0.00E+00	0.00E+00	0.00E+00	4.73E+06
Y-92	5.58E-05	0.00E+00	1.63E-06	0.00E+00	0.00E+00	0.00E+00	9.77E-01
Y-93	2.23E-01	0.00E+00	6.17E-03	0.00E+00	0.00E+00	0.00E+00	7.08E+03
Zr-95	9.43E+02	3.02E+02	2.05E+02	0.00E+00	4.75E+02	0.00E+00	9.59E+05
Zr-97	4.33E-01	8.74E-02	4.00E-02	0.00E+00	1.32E-01	0.00E+00	2.71E+04
Nb-95	8.26E+04	4.60E+04	2.47E+04	0.00E+00	4.54E+04	0.00E+00	2.79E+08
Mo-99	0.00E+00	2.48E+07	4.71E+06	0.00E+00	5.61E+07	0.00E+00	5.74E+07
Tc-99m	3.32E+00	9.38E+00	1.20E+02	0.00E+00	1.43E+02	4.60E+00	5.55E+03
Tc-101	0.00E+00	0.00E+00	0.00E+00	0.00E+00	0.00E+00	0.00E+00	0.00E+00
Ru-103	1.02E+03	0.00E+00	4.38E+02	0.00E+00	3.88E+03	0.00E+00	1.19E+05
Ru-105	8.57E-04	0.00E+00	3.38E-04	0.00E+00	1.11E-02	0.00E+00	5.24E-01
Ru-106	2.04E+04	0.00E+00	2.58E+03	0.00E+00	3.94E+04	0.00E+00	1.32E+06
Ag-110m	5.82E+07	5.39E+07	3.20E+07	0.00E+00	1.06E+08	0.00E+00	2.20E+10
Sb-122	2.24E+05	5.16E+03	7.73E+04	3.47E+03	0.00E+00	1.35E+05	8.52E+07
Sb-124	2.57E+07	4.87E+05	1.01E+07	6.25E+04	0.00E+00	2.00E+07	7.31E+08
Sb-125	2.04E+07	2.28E+05	4.86E+06	2.08E+04	0.00E+00	1.58E+07	2.25E+08

Table 3-12a

ADULT GRASS/COW/MILK PATHWAY Ri(C)

m^2 * mrem/yr per uCi/sec (H-3: mrem/yr per uCi/m^3)

Isotope	BONE	LIVER	TOT BODY	THYROID	KIDNEY	LUNG	GILLI
Te-125m	1.63E+07	5.90E+06	2.18E+06	4.90E+06	6.63E+07	0.00E+00	6.50E+07
Te-127m	4.58E+07	1.64E+07	5.58E+06	1.17E+07	1.86E+08	0.00E+00	1.54E+08
Te-127	6.53E+02	2.34E+02	1.41E+02	4.84E+02	2.66E+03	0.00E+00	5.15E+04
Te-129m	6.02E+07	2.25E+07	9.53E+06	2.07E+07	2.51E+08	0.00E+00	3.03E+08
Te-129	2.82E-10	1.06E-10	6.88E-11	2.17E-10	1.19E-09	0.00E+00	2.13E-10
Te-131m	3.61E+05	1.77E+05	1.47E+05	2.80E+05	1.79E+06	0.00E+00	1.75E+07
Te-131	3.60E-33	1.51E-33	1.14E-33	2.96E-33	1.58E-32	0.00E+00	5.10E-34
Te-132	2.40E+06	1.55E+06	1.46E+06	1.72E+06	1.50E+07	0.00E+00	7.35E+07
I-130	4.20E+05	1.24E+06	4.89E+05	1.05E+08	1.93E+06	0.00E+00	1.07E+06
I-131	2.96E+08	4.23E+08	2.43E+08	1.39E+11	7.26E+08	0.00E+00	1.12E+08
I-132	1.64E-01	4.39E-01	1.54E-01	1.54E+01	7.00E-01	0.00E+00	8.25E-02
I-133	3.87E+06	6.73E+06	2.05E+06	9.89E+08	1.17E+07	0.00E+00	6.05E+06
I-134	2.02E-12	5.48E-12	1.96E-12	9.49E-11	8.71E-12	0.00E+00	4.77E-15
I-135	1.28E+04	3.36E+04	1.24E+04	2.22E+06	5.39E+04	0.00E+00	3.80E+04
Cs-134	5.65E+09	1.35E+10	1.10E+10	0.00E+00	4.35E+09	1.45E+09	2.35E+08
Cs-136	2.63E+08	1.04E+09	7.46E+08	0.00E+00	5.77E+08	7.90E+07	1.18E+08
Cs-137	7.38E+09	1.01E+10	6.61E+09	0.00E+00	3.43E+09	1.14E+09	1.95E+08
Cs-138	9.04E-24	1.79E-23	8.85E-24	0.00E+00	1.31E-23	1.30E-24	7.62E-29
Ba-139	3.92E-08	2.79E-11	1.15E-09	0.00E+00	2.61E-11	1.58E-11	6.94E-08
Ba-140	2.68E+07	3.37E+04	1.76E+06	0.00E+00	1.15E+04	1.93E+04	5.52E+07
Ba-141	0.00E+00	0.00E+00	0.00E+00	0.00E+00	0.00E+00	0.00E+00	0.00E+00
Ba-142	0.00E+00	0.00E+00	0.00E+00	0.00E+00	0.00E+00	0.00E+00	0.00E+00
La-140	4.52E+00	2.28E+00	6.02E-01	0.00E+00	0.00E+00	0.00E+00	1.67E+05
La-142	9.34E-12	4.25E-12	1.06E-12	0.00E+00	0.00E+00	0.00E+00	3.10E-08
Ce-141	4.84E+03	3.28E+03	3.72E+02	0.00E+00	1.52E+03	0.00E+00	1.25E+07
Ce-143	4.16E+01	3.07E+04	3.40E+00	0.00E+00	1.35E+01	0.00E+00	1.15E+06
Ce-144	3.58E+05	1.50E+05	1.92E+04	0.00E+00	8.87E+04	0.00E+00	1.21E+08
Pr-143	1.58E+02	6.33E+01	7.83E+00	0.00E+00	3.66E+01	0.00E+00	6.92E+05
Pr-144	0.00E+00	0.00E+00	0.00E+00	0.00E+00	0.00E+00	0.00E+00	0.00E+00
Nd-147	9.42E+01	1.09E+02	6.51E+00	0.00E+00	6.36E+01	0.00E+00	5.22E+05
W-187	6.56E+03	5.48E+03	1.92E+03	0.00E+00	0.00E+00	0.00E+00	1.80E+06
Np-239	3.68E+00	3.62E-01	2.00E-01	0.00E+00	1.13E+00	0.00E+00	7.43E+04
K-40	0.00E+00	0.00E+00	0.00E+00	0.00E+00	0.00E+00	0.00E+00	0.00E+00
Co-57	0.00E+00	1.28E+06	2.13E+06	0.00E+00	0.00E+00	0.00E+00	3.25E+07
Sr-85	0.00E+00	0.00E+00	0.00E+00	0.00E+00	0.00E+00	0.00E+00	0.00E+00
Y-88	0.00E+00	0.00E+00	0.00E+00	0.00E+00	0.00E+00	0.00E+00	0.00E+00
Nb-94	0.00E+00	0.00E+00	0.00E+00	0.00E+00	0.00E+00	0.00E+00	0.00E+00
Nb-97	3.29E-12	8.32E-13	3.04E-13	0.00E+00	9.71E-13	0.00E+00	3.07E-09
Cd-109	0.00E+00	0.00E+00	0.00E+00	0.00E+00	0.00E+00	0.00E+00	0.00E+00
Sn-113	0.00E+00	0.00E+00	0.00E+00	0.00E+00	0.00E+00	0.00E+00	0.00E+00
Ba-133	0.00E+00	0.00E+00	0.00E+00	0.00E+00	0.00E+00	0.00E+00	0.00E+00
Te-134	8.90E-19	5.83E-19	3.57E-19	7.78E-19	5.63E-18	0.00E+00	9.87E-22
Ce-139	0.00E+00	0.00E+00	0.00E+00	0.00E+00	0.00E+00	0.00E+00	0.00E+00
Hg-203	0.00E+00	0.00E+00	0.00E+00	0.00E+00	0.00E+00	0.00E+00	0.00E+00

Table 3-12b

TEEN GRASS/COW/MILK PATHWAY Ri(C)

m^2 * mrem/yr per uCi/sec (H-3: mrem/yr per uCi/m^3)

Isotope	BONE	LIVER	TOT BODY	THYROID	KIDNEY	LUNG	GILLI
H-3	0.00E+00	9.94E+02	9.94E+02	9.94E+02	9.94E+02	9.94E+02	9.94E+02
Be-7	3.05E+03	6.83E+03	3.41E+03	0.00E+00	7.23E+03	0.00E+00	8.31E+05
Na-24	4.26E+06	4.26E+06	4.26E+06	4.26E+06	4.26E+06	4.26E+06	4.26E+06
P-32	3.15E+10	1.95E+09	1.22E+09	0.00E+00	0.00E+00	0.00E+00	2.65E+09
Cr-51	0.00E+00	0.00E+00	4.99E+04	2.77E+04	1.09E+04	7.13E+04	8.39E+06
Mn-54	0.00E+00	1.40E+07	2.78E+06	0.00E+00	4.18E+06	0.00E+00	2.87E+07
Mn-56	0.00E+00	7.36E-03	1.31E-03	0.00E+00	9.31E-03	0.00E+00	4.84E-01
Fe-55	4.45E+07	3.16E+07	7.36E+06	0.00E+00	0.00E+00	2.00E+07	1.37E+07
Fe-59	5.18E+07	1.21E+08	4.67E+07	0.00E+00	0.00E+00	3.81E+07	2.86E+08
Co-58	0.00E+00	7.94E+06	1.83E+07	0.00E+00	0.00E+00	0.00E+00	1.09E+08
Co-60	0.00E+00	2.78E+07	6.26E+07	0.00E+00	0.00E+00	0.00E+00	3.62E+08
Ni-63	1.18E+10	8.35E+08	4.01E+08	0.00E+00	0.00E+00	0.00E+00	1.33E+08
Ni-65	6.77E-01	8.65E-02	3.94E-02	0.00E+00	0.00E+00	0.00E+00	4.69E+00
Cu-64	0.00E+00	4.25E+04	2.00E+04	0.00E+00	1.07E+05	0.00E+00	3.29E+06
Zn-65	2.11E+09	7.31E+09	3.41E+09	0.00E+00	4.68E+09	0.00E+00	3.10E+09
Zn-69	9.55E-12	1.82E-11	1.27E-12	0.00E+00	1.19E-11	0.00E+00	3.35E-11
Br-83	0.00E+00	0.00E+00	1.79E-01	0.00E+00	0.00E+00	0.00E+00	0.00E+00
Br-84	0.00E+00	0.00E+00	2.88E-23	0.00E+00	0.00E+00	0.00E+00	0.00E+00
Br-85	0.00E+00	0.00E+00	0.00E+00	0.00E+00	0.00E+00	0.00E+00	0.00E+00
Rb-86	0.00E+00	4.73E+09	2.22E+09	0.00E+00	0.00E+00	0.00E+00	7.00E+08
Rb-88	0.00E+00	0.00E+00	0.00E+00	0.00E+00	0.00E+00	0.00E+00	0.00E+00
Rb-89	0.00E+00	0.00E+00	0.00E+00	0.00E+00	0.00E+00	0.00E+00	0.00E+00
Sr-89	2.67E+09	0.00E+00	7.66E+07	0.00E+00	0.00E+00	0.00E+00	3.18E+08
Sr-90	6.61E+10	0.00E+00	1.63E+10	0.00E+00	0.00E+00	0.00E+00	1.86E+09
Sr-91	5.31E+04	0.00E+00	2.11E+03	0.00E+00	0.00E+00	0.00E+00	2.41E+05
Sr-92	8.94E-01	0.00E+00	3.81E-02	0.00E+00	0.00E+00	0.00E+00	2.28E+01
Y-90	1.30E+02	0.00E+00	3.50E+00	0.00E+00	0.00E+00	0.00E+00	1.07E+06
Y-91m	1.10E-19	0.00E+00	4.19E-21	0.00E+00	0.00E+00	0.00E+00	5.17E-18
Y-91	1.58E+04	0.00E+00	4.24E+02	0.00E+00	0.00E+00	0.00E+00	6.48E+06
Y-92	1.03E-04	0.00E+00	2.98E-06	0.00E+00	0.00E+00	0.00E+00	2.83E+00
Y-93	4.12E-01	0.00E+00	1.13E-02	0.00E+00	0.00E+00	0.00E+00	1.26E+04
Zr-95	1.65E+03	5.20E+02	3.58E+02	0.00E+00	7.65E+02	0.00E+00	1.20E+06
Zr-97	7.88E-01	1.56E-01	7.19E-02	0.00E+00	2.37E-01	0.00E+00	4.22E+04
Nb-95	1.41E+05	7.82E+04	4.30E+04	0.00E+00	7.58E+04	0.00E+00	3.34E+08
Mo-99	0.00E+00	4.47E+07	8.52E+06	0.00E+00	1.02E+08	0.00E+00	8.01E+07
Tc-99m	5.76E+00	1.61E+01	2.08E+02	0.00E+00	2.39E+02	8.92E+00	1.05E+04
Tc-101	0.00E+00	0.00E+00	0.00E+00	0.00E+00	0.00E+00	0.00E+00	0.00E+00
Ru-103	1.81E+03	0.00E+00	7.74E+02	0.00E+00	6.38E+03	0.00E+00	1.51E+05
Ru-105	1.56E-03	0.00E+00	6.07E-04	0.00E+00	1.97E-02	0.00E+00	1.26E+00
Ru-106	3.75E+04	0.00E+00	4.73E+03	0.00E+00	7.24E+04	0.00E+00	1.80E+06
Ag-110m	9.63E+07	9.11E+07	5.54E+07	0.00E+00	1.74E+08	0.00E+00	2.56E+10
Sb-122	4.77E+05	9.29E+03	1.39E+05	6.06E+03	0.00E+00	2.98E+05	1.00E+08
Sb-124	4.58E+07	8.44E+05	1.79E+07	1.04E+05	0.00E+00	4.00E+07	9.26E+08
Sb-125	3.65E+07	3.99E+05	8.53E+06	3.48E+04	0.00E+00	3.18E+07	2.83E+08

Table 3-12b

TEEN GRASS/COW/MILK PATHWAY Ri(C)

m^2 * mrem/yr per uCi/sec (H-3: mrem/yr per uCi/m^3)

Isotope	BONE	LIVER	TOT BODY	THYROID	KIDNEY	LUNG	GILLI
Te-125m	3.00E+07	1.08E+07	4.02E+06	8.39E+06	0.00E+00	0.00E+00	8.86E+07
Te-127m	8.44E+07	2.99E+07	1.00E+07	2.01E+07	3.42E+08	0.00E+00	2.10E+08
Te-127	1.21E+03	4.29E+02	2.60E+02	8.35E+02	4.90E+03	0.00E+00	9.34E+04
Te-129m	1.10E+08	4.09E+07	1.74E+07	3.55E+07	4.61E+08	0.00E+00	4.13E+08
Te-129	5.20E-10	1.94E-10	1.26E-10	3.71E-10	2.18E-09	0.00E+00	2.84E-09
Te-131m	6.57E+05	3.15E+05	2.63E+05	4.74E+05	3.29E+06	0.00E+00	2.53E+07
Te-131	6.58E-33	2.71E-33	2.06E-33	5.07E-33	2.88E-32	0.00E+00	5.40E-34
Te-132	4.29E+06	2.72E+06	2.56E+06	2.87E+06	2.61E+07	0.00E+00	8.61E+07
I-130	7.38E+05	2.14E+06	8.53E+05	1.74E+08	3.29E+06	0.00E+00	1.64E+06
I-131	5.37E+08	7.52E+08	4.04E+08	2.19E+11	1.29E+09	0.00E+00	1.49E+08
I-132	2.91E-01	7.62E-01	2.74E-01	2.57E+01	1.20E+00	0.00E+00	3.32E-01
I-133	7.07E+06	1.20E+07	3.66E+06	1.67E+09	2.10E+07	0.00E+00	9.07E+06
I-134	3.58E-12	9.50E-12	3.41E-12	1.58E-10	1.50E-11	0.00E+00	1.25E-13
I-135	2.28E+04	5.87E+04	2.18E+04	3.78E+06	9.27E+04	0.00E+00	6.51E+04
Cs-134	9.82E+09	2.31E+10	1.07E+10	0.00E+00	7.34E+09	2.80E+09	2.87E+08
Cs-136	4.47E+08	1.76E+09	1.18E+09	0.00E+00	9.57E+08	1.51E+08	1.42E+08
Cs-137	1.34E+10	1.78E+10	6.20E+09	0.00E+00	6.06E+09	2.35E+09	2.53E+08
Cs-138	1.64E-23	3.15E-23	1.57E-23	0.00E+00	2.33E-23	2.71E-24	1.43E-26
Ba-139	7.24E-08	5.09E-11	2.11E-09	0.00E+00	4.80E-11	3.51E-11	6.46E-07
Ba-140	4.84E+07	5.93E+04	3.12E+06	0.00E+00	2.01E+04	3.99E+04	7.46E+07
Ba-141	0.00E+00	0.00E+00	0.00E+00	0.00E+00	0.00E+00	0.00E+00	0.00E+00
Ba-142	0.00E+00	0.00E+00	0.00E+00	0.00E+00	0.00E+00	0.00E+00	0.00E+00
La-140	8.12E+00	3.99E+00	1.06E+00	0.00E+00	0.00E+00	0.00E+00	2.29E+05
La-142	1.69E-11	7.49E-12	1.86E-12	0.00E+00	0.00E+00	0.00E+00	2.28E-07
Ce-141	8.88E+03	5.93E+03	6.81E+02	0.00E+00	2.79E+03	0.00E+00	1.70E+07
Ce-143	7.64E+01	5.56E+04	6.21E+00	0.00E+00	2.49E+01	0.00E+00	1.67E+06
Ce-144	6.58E+05	2.72E+05	3.54E+04	0.00E+00	1.63E+05	0.00E+00	1.66E+08
Pr-143	2.90E+02	1.16E+02	1.44E+01	0.00E+00	6.73E+01	0.00E+00	9.54E+05
Pr-144	0.00E+00	0.00E+00	0.00E+00	0.00E+00	0.00E+00	0.00E+00	0.00E+00
Nd-147	1.81E+02	1.97E+02	1.18E+01	0.00E+00	1.16E+02	0.00E+00	7.11E+05
W-187	1.20E+04	9.78E+03	3.43E+03	0.00E+00	0.00E+00	0.00E+00	2.65E+06
Np-239	7.03E+00	6.63E-01	3.68E-01	0.00E+00	2.08E+00	0.00E+00	1.07E+05
K-40	0.00E+00	0.00E+00	0.00E+00	0.00E+00	0.00E+00	0.00E+00	0.00E+00
Co-57	0.00E+00	2.25E+06	3.76E+06	0.00E+00	0.00E+00	0.00E+00	4.19E+07
Sr-85	0.00E+00	0.00E+00	0.00E+00	0.00E+00	0.00E+00	0.00E+00	0.00E+00
Y-88	0.00E+00	0.00E+00	0.00E+00	0.00E+00	0.00E+00	0.00E+00	0.00E+00
Nb-94	0.00E+00	0.00E+00	0.00E+00	0.00E+00	0.00E+00	0.00E+00	0.00E+00
Nb-97	5.99E-12	1.49E-12	5.43E-13	0.00E+00	1.74E-12	0.00E+00	3.55E-08
Cd-109	0.00E+00	0.00E+00	0.00E+00	0.00E+00	0.00E+00	0.00E+00	0.00E+00
Sn-113	0.00E+00	0.00E+00	0.00E+00	0.00E+00	0.00E+00	0.00E+00	0.00E+00
Ba-133	0.00E+00	0.00E+00	0.00E+00	0.00E+00	0.00E+00	0.00E+00	0.00E+00
Te-134	1.59E-18	1.02E-18	1.06E-18	1.30E-18	9.72E-18	0.00E+00	5.89E-20
Ce-139	0.00E+00	0.00E+00	0.00E+00	0.00E+00	0.00E+00	0.00E+00	0.00E+00
Hg-203	0.00E+00	0.00E+00	0.00E+00	0.00E+00	0.00E+00	0.00E+00	0.00E+00

Table 3-12c

CHILD GRASS/COW/MILK PATHWAY Ri(C)

m^2 * mrem/yr per uCi/sec (H-3: mrem/yr per uCi/m^3)

Isotope	BONE	LIVER	TOT BODY	THYROID	KIDNEY	LUNG	GILLI
H-3	0.00E+00	1.57E+03	1.57E+03	1.57E+03	1.57E+03	1.57E+03	1.57E+03
Be-7	7.49E+03	1.27E+04	8.38E+03	0.00E+00	1.25E+04	0.00E+00	7.11E+05
Na-24	8.85E+06	8.85E+06	8.85E+06	8.85E+06	8.85E+06	8.85E+06	8.85E+06
P-32	7.78E+10	3.64E+09	3.00E+09	0.00E+00	0.00E+00	0.00E+00	2.15E+09
Cr-51	0.00E+00	0.00E+00	1.02E+05	5.65E+04	1.54E+04	1.03E+05	5.40E+06
Mn-54	0.00E+00	2.10E+07	5.59E+06	0.00E+00	5.88E+06	0.00E+00	1.76E+07
Mn-56	0.00E+00	1.28E-02	2.90E-03	0.00E+00	1.55E-02	0.00E+00	1.86E+00
Fe-55	1.12E+08	5.93E+07	1.84E+07	0.00E+00	0.00E+00	3.35E+07	1.10E+07
Fe-59	1.20E+08	1.94E+08	9.68E+07	0.00E+00	0.00E+00	5.64E+07	2.02E+08
Co-58	0.00E+00	1.21E+07	3.71E+07	0.00E+00	0.00E+00	0.00E+00	7.07E+07
Co-60	0.00E+00	4.32E+07	1.27E+08	0.00E+00	0.00E+00	0.00E+00	2.39E+08
Ni-63	2.96E+10	1.59E+09	1.01E+09	0.00E+00	0.00E+00	0.00E+00	1.07E+08
Ni-65	1.66E+00	1.56E-01	9.10E-02	0.00E+00	0.00E+00	0.00E+00	1.91E+01
Cu-64	0.00E+00	7.46E+04	4.51E+04	0.00E+00	1.80E+05	0.00E+00	3.50E+06
Zn-65	4.13E+09	1.10E+10	6.85E+09	0.00E+00	6.94E+09	0.00E+00	1.93E+09
Zn-69	2.35E-11	3.39E-11	3.13E-12	0.00E+00	2.06E-11	0.00E+00	2.14E-09
Br-83	0.00E+00	0.00E+00	4.40E-01	0.00E+00	0.00E+00	0.00E+00	0.00E+00
Br-84	0.00E+00	0.00E+00	6.51E-23	0.00E+00	0.00E+00	0.00E+00	0.00E+00
Br-85	0.00E+00	0.00E+00	0.00E+00	0.00E+00	0.00E+00	0.00E+00	0.00E+00
Rb-86	0.00E+00	8.77E+09	5.39E+09	0.00E+00	0.00E+00	0.00E+00	5.64E+08
Rb-88	0.00E+00	0.00E+00	0.00E+00	0.00E+00	0.00E+00	0.00E+00	0.00E+00
Rb-89	0.00E+00	0.00E+00	0.00E+00	0.00E+00	0.00E+00	0.00E+00	0.00E+00
Sr-89	6.62E+09	0.00E+00	1.89E+08	0.00E+00	0.00E+00	0.00E+00	2.56E+08
Sr-90	1.12E+11	0.00E+00	2.83E+10	0.00E+00	0.00E+00	0.00E+00	1.51E+09
Sr-91	1.30E+05	0.00E+00	4.92E+03	0.00E+00	0.00E+00	0.00E+00	2.88E+05
Sr-92	2.18E+00	0.00E+00	8.75E-02	0.00E+00	0.00E+00	0.00E+00	4.13E+01
Y-90	3.21E+02	0.00E+00	8.60E+00	0.00E+00	0.00E+00	0.00E+00	9.15E+05
Y-91m	2.68E-19	0.00E+00	9.74E-21	0.00E+00	0.00E+00	0.00E+00	5.24E-16
Y-91	3.90E+04	0.00E+00	1.04E+03	0.00E+00	0.00E+00	0.00E+00	5.20E+06
Y-92	2.53E-04	0.00E+00	7.24E-06	0.00E+00	0.00E+00	0.00E+00	7.31E+00
Y-93	1.01E+00	0.00E+00	2.78E-02	0.00E+00	0.00E+00	0.00E+00	1.51E+04
Zr-95	3.83E+03	8.42E+02	7.50E+02	0.00E+00	1.21E+03	0.00E+00	8.79E+05
Zr-97	1.92E+00	2.77E-01	1.64E-01	0.00E+00	3.98E-01	0.00E+00	4.20E+04
Nb-95	3.18E+05	1.24E+05	8.85E+04	0.00E+00	1.16E+05	0.00E+00	2.29E+08
Mo-99	0.00E+00	8.13E+07	2.01E+07	0.00E+00	1.74E+08	0.00E+00	6.73E+07
Tc-99m	1.32E+01	2.59E+01	4.29E+02	0.00E+00	3.76E+02	1.32E+01	1.47E+04
Tc-101	0.00E+00	0.00E+00	0.00E+00	0.00E+00	0.00E+00	0.00E+00	0.00E+00
Ru-103	4.28E+03	0.00E+00	1.65E+03	0.00E+00	1.08E+04	0.00E+00	1.11E+05
Ru-105	3.82E-03	0.00E+00	1.39E-03	0.00E+00	3.36E-02	0.00E+00	2.49E+00
Ru-106	9.24E+04	0.00E+00	1.15E+04	0.00E+00	1.25E+05	0.00E+00	1.44E+06
Ag-110m	2.09E+08	1.41E+08	1.13E+08	0.00E+00	2.63E+08	0.00E+00	1.68E+10
Sb-122	1.17E+06	1.73E+04	3.44E+05	1.50E+04	0.00E+00	4.77E+05	9.02E+07
Sb-124	1.09E+08	1.41E+06	3.80E+07	2.39E+05	0.00E+00	6.02E+07	6.78E+08
Sb-125	8.69E+07	6.70E+05	1.82E+07	8.06E+04	0.00E+00	4.84E+07	2.08E+08

Table 3-12c

CHILD GRASS/COW/MILK PATHWAY Ri(C)

m^2 * mrem/yr per uCi/sec (H-3: mrem/yr per uCi/m^3)

Isotope	BONE	LIVER	TOT BODY	THYROID	KIDNEY	LUNG	GILLI
Te-125m	7.38E+07	2.00E+07	9.84E+06	2.07E+07	0.00E+00	0.00E+00	7.12E+07
Te-127m	2.08E+08	5.60E+07	2.47E+07	4.97E+07	5.93E+08	0.00E+00	1.68E+08
Te-127	2.98E+03	8.02E+02	6.38E+02	2.06E+03	8.47E+03	0.00E+00	1.16E+05
Te-129m	2.71E+08	7.58E+07	4.21E+07	8.75E+07	7.97E+08	0.00E+00	3.31E+08
Te-129	1.28E-09	3.58E-10	3.04E-10	9.15E-10	3.75E-09	0.00E+00	7.98E-08
Te-131m	1.60E+06	5.53E+05	5.89E+05	1.14E+06	5.35E+06	0.00E+00	2.24E+07
Te-131	1.62E-32	4.93E-33	4.81E-33	1.24E-32	4.89E-32	0.00E+00	8.49E-32
Te-132	1.02E+07	4.53E+06	5.48E+06	6.60E+06	4.21E+07	0.00E+00	4.57E+07
I-130	1.73E+06	3.49E+06	1.80E+06	3.84E+08	5.22E+06	0.00E+00	1.63E+06
I-131	1.30E+09	1.31E+09	7.45E+08	4.33E+11	2.15E+09	0.00E+00	1.17E+08
I-132	6.89E-01	1.27E+00	5.82E-01	5.87E+01	1.94E+00	0.00E+00	1.49E+00
I-133	1.72E+07	2.12E+07	8.03E+06	3.94E+09	3.54E+07	0.00E+00	8.56E+06
I-134	8.48E-12	1.58E-11	7.25E-12	3.62E-10	2.41E-11	0.00E+00	1.04E-11
I-135	5.40E+04	9.72E+04	4.60E+04	8.61E+06	1.49E+05	0.00E+00	7.40E+04
Cs-134	2.26E+10	3.72E+10	7.84E+09	0.00E+00	1.15E+10	4.13E+09	2.00E+08
Cs-136	1.01E+09	2.77E+09	1.79E+09	0.00E+00	1.48E+09	2.20E+08	9.74E+07
Cs-137	3.22E+10	3.09E+10	4.55E+09	0.00E+00	1.01E+10	3.62E+09	1.93E+08
Cs-138	3.98E-23	5.53E-23	3.51E-23	0.00E+00	3.89E-23	4.19E-24	2.55E-23
Ba-139	1.78E-07	9.50E-11	5.16E-09	0.00E+00	8.29E-11	5.59E-11	1.03E-05
Ba-140	1.17E+08	1.02E+05	6.82E+06	0.00E+00	3.33E+04	6.10E+04	5.92E+07
Ba-141	0.00E+00	0.00E+00	0.00E+00	0.00E+00	0.00E+00	0.00E+00	0.00E+00
Ba-142	0.00E+00	0.00E+00	0.00E+00	0.00E+00	0.00E+00	0.00E+00	0.00E+00
La-140	1.94E+01	6.80E+00	2.29E+00	0.00E+00	0.00E+00	0.00E+00	1.89E+05
La-142	4.07E-11	1.30E-11	4.06E-12	0.00E+00	0.00E+00	0.00E+00	2.57E-06
Ce-141	2.19E+04	1.09E+04	1.62E+03	0.00E+00	4.78E+03	0.00E+00	1.36E+07
Ce-143	1.87E+02	1.02E+05	1.47E+01	0.00E+00	4.26E+01	0.00E+00	1.49E+06
Ce-144	1.62E+06	5.09E+05	8.66E+04	0.00E+00	2.82E+05	0.00E+00	1.33E+08
Pr-143	7.18E+02	2.16E+02	3.56E+01	0.00E+00	1.17E+02	0.00E+00	7.75E+05
Pr-144	0.00E+00	0.00E+00	0.00E+00	0.00E+00	0.00E+00	0.00E+00	0.00E+00
Nd-147	4.45E+02	3.60E+02	2.79E+01	0.00E+00	1.98E+02	0.00E+00	5.70E+05
W-187	2.91E+04	1.72E+04	7.73E+03	0.00E+00	0.00E+00	0.00E+00	2.42E+06
Np-239	1.73E+01	1.24E+00	8.73E-01	0.00E+00	3.59E+00	0.00E+00	9.19E+04
K-40	0.00E+00	0.00E+00	0.00E+00	0.00E+00	0.00E+00	0.00E+00	0.00E+00
Co-57	0.00E+00	3.84E+06	7.77E+06	0.00E+00	0.00E+00	0.00E+00	3.14E+07
Sr-85	0.00E+00	0.00E+00	0.00E+00	0.00E+00	0.00E+00	0.00E+00	0.00E+00
Y-88	0.00E+00	0.00E+00	0.00E+00	0.00E+00	0.00E+00	0.00E+00	0.00E+00
Nb-94	0.00E+00	0.00E+00	0.00E+00	0.00E+00	0.00E+00	0.00E+00	0.00E+00
Nb-97	1.46E-11	2.63E-12	1.23E-12	0.00E+00	2.92E-12	0.00E+00	8.12E-07
Cd-109	0.00E+00	0.00E+00	0.00E+00	0.00E+00	0.00E+00	0.00E+00	0.00E+00
Sn-113	0.00E+00	0.00E+00	0.00E+00	0.00E+00	0.00E+00	0.00E+00	0.00E+00
Ba-133	0.00E+00	0.00E+00	0.00E+00	0.00E+00	0.00E+00	0.00E+00	0.00E+00
Te-134	3.77E-18	1.70E-18	2.26E-18	2.98E-18	1.57E-17	0.00E+00	1.72E-17
Ce-139	0.00E+00	0.00E+00	0.00E+00	0.00E+00	0.00E+00	0.00E+00	0.00E+00
Hg-203	0.00E+00	0.00E+00	0.00E+00	0.00E+00	0.00E+00	0.00E+00	0.00E+00

Table 3-12d

INFANT GRASS/COW/MILK PATHWAY Ri(C)

m^2 * mrem/yr per uCi/sec (H-3: mrem/yr per uCi/m^3)

Isotope	BONE	LIVER	TOT BODY	THYROID	KIDNEY	LUNG	GILLI
H-3	0.00E+00	2.38E+03	2.38E+03	2.38E+03	2.38E+03	2.38E+03	2.38E+03
Be-7	1.43E+04	3.00E+04	1.59E+04	0.00E+00	2.12E+04	0.00E+00	7.05E+05
Na-24	1.54E+07	1.54E+07	1.54E+07	1.54E+07	1.54E+07	1.54E+07	1.54E+07
P-32	1.60E+11	9.43E+09	6.21E+09	0.00E+00	0.00E+00	0.00E+00	2.17E+09
Cr-51	0.00E+00	0.00E+00	1.61E+05	1.05E+05	2.30E+04	2.05E+05	4.70E+06
Mn-54	0.00E+00	3.90E+07	8.84E+06	0.00E+00	8.64E+06	0.00E+00	1.43E+07
Mn-56	0.00E+00	3.14E-02	5.42E-03	0.00E+00	2.70E-02	0.00E+00	2.85E+00
Fe-55	1.35E+08	8.73E+07	2.33E+07	0.00E+00	0.00E+00	4.27E+07	1.11E+07
Fe-59	2.24E+08	3.92E+08	1.54E+08	0.00E+00	0.00E+00	1.16E+08	1.87E+08
Co-58	0.00E+00	2.42E+07	6.05E+07	0.00E+00	0.00E+00	0.00E+00	6.04E+07
Co-60	0.00E+00	8.82E+07	2.08E+08	0.00E+00	0.00E+00	0.00E+00	2.10E+08
Ni-63	3.49E+10	2.16E+09	1.21E+09	0.00E+00	0.00E+00	0.00E+00	1.07E+08
Ni-65	3.50E+00	3.97E-01	1.80E-01	0.00E+00	0.00E+00	0.00E+00	3.02E+01
Cu-64	0.00E+00	1.86E+05	8.59E+04	0.00E+00	3.14E+05	0.00E+00	3.81E+06
Zn-65	5.55E+09	1.90E+10	8.78E+09	0.00E+00	9.23E+09	0.00E+00	1.61E+10
Zn-69	5.00E-11	9.00E-11	6.70E-12	0.00E+00	3.74E-11	0.00E+00	7.34E-09
Br-83	0.00E+00	0.00E+00	9.34E-01	0.00E+00	0.00E+00	0.00E+00	0.00E+00
Br-84	0.00E+00	0.00E+00	1.26E-22	0.00E+00	0.00E+00	0.00E+00	0.00E+00
Br-85	0.00E+00	0.00E+00	0.00E+00	0.00E+00	0.00E+00	0.00E+00	0.00E+00
Rb-86	0.00E+00	2.23E+10	1.10E+10	0.00E+00	0.00E+00	0.00E+00	5.69E+08
Rb-88	0.00E+00	0.00E+00	0.00E+00	0.00E+00	0.00E+00	0.00E+00	0.00E+00
Rb-89	0.00E+00	0.00E+00	0.00E+00	0.00E+00	0.00E+00	0.00E+00	0.00E+00
Sr-89	1.26E+10	0.00E+00	3.61E+08	0.00E+00	0.00E+00	0.00E+00	2.59E+08
Sr-90	1.22E+11	0.00E+00	3.10E+10	0.00E+00	0.00E+00	0.00E+00	1.52E+09
Sr-91	2.72E+05	0.00E+00	9.83E+03	0.00E+00	0.00E+00	0.00E+00	3.21E+05
Sr-92	4.64E+00	0.00E+00	1.72E-01	0.00E+00	0.00E+00	0.00E+00	5.00E+01
Y-90	6.80E+02	0.00E+00	1.82E+01	0.00E+00	0.00E+00	0.00E+00	9.39E+05
Y-91m	5.67E-19	0.00E+00	1.93E-20	0.00E+00	0.00E+00	0.00E+00	1.89E-15
Y-91	7.33E+04	0.00E+00	1.95E+03	0.00E+00	0.00E+00	0.00E+00	5.25E+06
Y-92	5.38E-04	0.00E+00	1.51E-05	0.00E+00	0.00E+00	0.00E+00	1.03E+01
Y-93	2.16E+00	0.00E+00	5.87E-02	0.00E+00	0.00E+00	0.00E+00	1.70E+04
Zr-95	6.80E+03	1.66E+03	1.18E+03	0.00E+00	1.79E+03	0.00E+00	8.26E+05
Zr-97	4.06E+00	6.97E-01	3.18E-01	0.00E+00	7.03E-01	0.00E+00	4.45E+04
Nb-95	5.94E+05	2.45E+05	1.41E+05	0.00E+00	1.75E+05	0.00E+00	2.06E+08
Mo-99	0.00E+00	2.08E+08	4.05E+07	0.00E+00	3.11E+08	0.00E+00	6.85E+07
Tc-99m	2.75E+01	5.67E+01	7.30E+02	0.00E+00	6.10E+02	2.96E+01	1.65E+04
Tc-101	0.00E+00	0.00E+00	0.00E+00	0.00E+00	0.00E+00	0.00E+00	0.00E+00
Ru-103	8.67E+03	0.00E+00	2.90E+03	0.00E+00	1.80E+04	0.00E+00	1.05E+05
Ru-105	8.05E-03	0.00E+00	2.71E-03	0.00E+00	5.92E-02	0.00E+00	3.20E+00
Ru-106	1.90E+05	0.00E+00	2.38E+04	0.00E+00	2.25E+05	0.00E+00	1.44E+06
Ag-110m	3.86E+08	2.82E+08	1.86E+08	0.00E+00	4.03E+08	0.00E+00	1.46E+10
Sb-122	2.51E+06	4.59E+04	7.31E+05	3.75E+04	0.00E+00	1.30E+06	9.13E+07
Sb-124	2.09E+08	3.08E+06	6.49E+07	5.56E+05	0.00E+00	1.31E+08	6.46E+08
Sb-125	1.50E+08	1.45E+06	3.08E+07	1.87E+05	0.00E+00	9.38E+07	1.99E+08

Table 3-12d

INFANT GRASS/COW/MILK PATHWAY Ri(C)

m^2 * mrem/yr per uCi/sec (H-3: mrem/yr per uCi/m^3)

Isotope	BONE	LIVER	TOT BODY	THYROID	KIDNEY	LUNG	GILLI
Te-125m	1.51E+08	5.04E+07	2.04E+07	5.07E+07	0.00E+00	0.00E+00	7.18E+07
Te-127m	4.21E+08	1.40E+08	5.10E+07	1.22E+08	1.04E+09	0.00E+00	1.70E+08
Te-127	6.32E+03	2.12E+03	1.36E+03	5.14E+03	1.54E+04	0.00E+00	1.33E+05
Te-129m	5.57E+08	1.91E+08	8.58E+07	2.14E+08	1.39E+09	0.00E+00	3.33E+08
Te-129	2.72E-09	9.37E-10	6.35E-10	2.28E-09	6.77E-09	0.00E+00	2.17E-07
Te-131m	3.38E+06	1.36E+06	1.12E+06	2.75E+06	9.35E+06	0.00E+00	2.29E+07
Te-131	3.43E-32	1.27E-32	9.62E-33	3.06E-32	8.76E-32	0.00E+00	1.38E-30
Te-132	2.11E+07	1.04E+07	9.75E+06	1.54E+07	6.53E+07	0.00E+00	3.87E+07
I-130	3.55E+06	7.81E+06	3.13E+06	8.75E+08	8.58E+06	0.00E+00	1.67E+06
I-131	2.72E+09	3.20E+09	1.41E+09	1.05E+12	3.74E+09	0.00E+00	1.14E+08
I-132	1.43E+00	2.90E+00	1.03E+00	1.36E+02	3.24E+00	0.00E+00	2.35E+00
I-133	3.63E+07	5.28E+07	1.55E+07	9.60E+09	6.21E+07	0.00E+00	8.93E+06
I-134	1.76E-11	3.60E-11	1.28E-11	8.40E-10	4.03E-11	0.00E+00	3.73E-11
I-135	1.12E+05	2.23E+05	8.14E+04	2.00E+07	2.49E+05	0.00E+00	8.08E+04
Cs-134	3.65E+10	6.80E+10	6.87E+09	0.00E+00	1.75E+10	7.18E+09	1.85E+08
Cs-136	1.97E+09	5.79E+09	2.16E+09	0.00E+00	2.31E+09	4.72E+08	8.80E+07
Cs-137	5.15E+10	6.02E+10	4.27E+09	0.00E+00	1.62E+10	6.55E+09	1.88E+08
Cs-138	8.39E-23	1.36E-22	6.61E-23	0.00E+00	6.80E-23	1.06E-23	2.18E-22
Ba-139	3.79E-07	2.51E-10	1.10E-08	0.00E+00	1.51E-10	1.52E-10	2.40E-05
Ba-140	2.40E+08	2.40E+05	1.24E+07	0.00E+00	5.71E+04	1.48E+05	5.91E+07
Ba-141	0.00E+00	0.00E+00	0.00E+00	0.00E+00	0.00E+00	0.00E+00	0.00E+00
Ba-142	0.00E+00	0.00E+00	0.00E+00	0.00E+00	0.00E+00	0.00E+00	0.00E+00
La-140	4.06E+01	1.60E+01	4.12E+00	0.00E+00	0.00E+00	0.00E+00	1.88E+05
La-142	8.55E-11	3.14E-11	7.51E-12	0.00E+00	0.00E+00	0.00E+00	5.33E-06
Ce-141	4.34E+04	2.64E+04	3.11E+03	0.00E+00	8.15E+03	0.00E+00	1.37E+07
Ce-143	3.97E+02	2.63E+05	3.00E+01	0.00E+00	7.67E+01	0.00E+00	1.54E+06
Ce-144	2.33E+06	9.52E+05	1.30E+05	0.00E+00	3.85E+05	0.00E+00	1.33E+08
Pr-143	1.49E+03	5.55E+02	7.36E+01	0.00E+00	2.06E+02	0.00E+00	7.84E+05
Pr-144	0.00E+00	0.00E+00	0.00E+00	0.00E+00	0.00E+00	0.00E+00	0.00E+00
Nd-147	8.81E+02	9.05E+02	5.55E+01	0.00E+00	3.49E+02	0.00E+00	5.74E+05
W-187	6.12E+04	4.26E+04	1.47E+04	0.00E+00	0.00E+00	0.00E+00	2.50E+06
Np-239	3.66E+01	3.27E+00	1.85E+00	0.00E+00	6.53E+00	0.00E+00	9.46E+04
K-40	0.00E+00	0.00E+00	0.00E+00	0.00E+00	0.00E+00	0.00E+00	0.00E+00
Co-57	0.00E+00	8.95E+06	1.46E+07	0.00E+00	0.00E+00	0.00E+00	3.05E+07
Sr-85	0.00E+00	0.00E+00	0.00E+00	0.00E+00	0.00E+00	0.00E+00	0.00E+00
Y-88	0.00E+00	0.00E+00	0.00E+00	0.00E+00	0.00E+00	0.00E+00	0.00E+00
Nb-94	0.00E+00	0.00E+00	0.00E+00	0.00E+00	0.00E+00	0.00E+00	0.00E+00
Nb-97	0.00E+00	0.00E+00	0.00E+00	0.00E+00	0.00E+00	0.00E+00	0.00E+00
Cd-109	0.00E+00	0.00E+00	0.00E+00	0.00E+00	0.00E+00	0.00E+00	0.00E+00
Sn-113	0.00E+00	0.00E+00	0.00E+00	0.00E+00	0.00E+00	0.00E+00	0.00E+00
Ba-133	0.00E+00	0.00E+00	0.00E+00	0.00E+00	0.00E+00	0.00E+00	0.00E+00
Te-134	0.00E+00	0.00E+00	0.00E+00	0.00E+00	0.00E+00	0.00E+00	0.00E+00
Ce-139	0.00E+00	0.00E+00	0.00E+00	0.00E+00	0.00E+00	0.00E+00	0.00E+00
Hg-203	0.00E+00	0.00E+00	0.00E+00	0.00E+00	0.00E+00	0.00E+00	0.00E+00

Table 3-13

Total Body & Skin Ground Plane Dose Factors Ri(G) and Ri(S)

Isotope	(sec^{-1}) Decay Constant	(m^2 * mrem/yr per uCi/sec) Ri(G)	Ri(S)
H-3	1.780E-09	0.00E+00	0.00E+00
Be-7	1.505E-07	0.00E+00	0.00E+00
Na-24	1.284E-05	1.19E+07	1.39E+07
P-32	5.614E-07	0.00E+00	0.00E+00
Cr-51	2.896E-07	4.66E+06	5.51E+06
Mn-54	2.567E-08	1.39E+09	1.62E+09
Mn-56	7.467E-05	9.03E+05	1.07E+06
Fe-55	8.141E-09	0.00E+00	0.00E+00
Fe-59	1.802E-07	2.72E+08	3.20E+08
Co-58	1.133E-07	3.79E+08	4.44E+08
Co-60	4.170E-09	2.15E+10	2.53E+10
Ni-63	2.290E-10	0.00E+00	0.00E+00
Ni-65	7.641E-05	2.97E+05	3.45E+05
Cu-64	1.516E-05	6.07E+05	6.88E+05
Zn-65	3.289E-08	7.46E+08	8.58E+08
Zn-69	2.027E-04	0.00E+00	0.00E+00
Br-83	8.056E-05	4.87E+03	7.08E+03
Br-84	3.633E-04	2.03E+05	2.36E+05
Br-85	3.851E-03	0.00E+00	0.00E+00
Rb-86	4.299E-07	8.99E+06	1.03E+07
Rb-88	6.490E-04	3.31E+04	3.78E+04
Rb-89	7.600E-04	1.21E+05	1.45E+05
Sr-89	1.589E-07	2.16E+04	2.51E+04
Sr-90	7.548E-10	0.00E+00	0.00E+00
Sr-91	2.027E-05	2.15E+06	2.51E+06
Sr-92	7.105E-05	7.77E+05	8.63E+05
Y-90	3.008E-06	4.48E+03	5.30E+03
Y-91m	2.324E-04	1.00E+05	1.16E+05
Y-91	1.371E-07	1.07E+06	1.21E+06
Y-92	5.439E-05	1.80E+05	2.14E+05
Y-93	1.906E-05	1.83E+05	2.51E+05
Zr-95	1.254E-07	2.45E+08	2.84E+08
Zr-97	1.139E-05	2.96E+06	3.44E+06
Nb-95	2.282E-07	1.37E+08	1.61E+08
Mo-99	2.917E-06	3.99E+06	4.62E+06
Tc-99m	3.198E-05	1.84E+05	2.11E+05
Tc-101	8.136E-04	2.04E+04	2.26E+04
Ru-103	2.042E-07	1.08E+08	1.26E+08
Ru-105	4.337E-05	6.36E+05	7.21E+05
Ru-106	2.179E-08	4.22E+08	5.07E+08
Ag-110m	3.210E-08	3.44E+09	4.01E+09
Sb-122	2.971E-06	0.00E+00	0.00E+00
Sb-124	1.333E-07	5.98E+08	6.90E+08
Sb-125	7.935E-09	2.34E+09	2.64E+09

Table 3-13

Total Body & Skin Ground Plane Dose Factors Ri(G) and Ri(S)

Isotope	(sec^{-1}) Decay Constant	(m^2 * mrem/yr per uCi/sec) Ri(G)	Ri(S)
Te-125m	1.383E-07	1.55E+06	2.13E+06
Te-127m	7.360E-08	9.16E+04	1.08E+05
Te-127	2.059E-05	2.98E+03	3.28E+03
Te-129m	2.388E-07	1.98E+07	2.31E+07
Te-129	1.660E-04	2.62E+04	3.10E+04
Te-131m	6.418E-06	8.03E+06	9.46E+06
Te-131	4.621E-04	2.92E+04	3.45E+07
Te-132	2.462E-06	4.23E+06	4.98E+06
I-130	1.558E-05	5.51E+06	6.69E+06
I-131	9.978E-07	1.72E+07	2.09E+07
I-132	8.371E-05	1.25E+06	1.46E+06
I-133	9.257E-06	2.45E+06	2.98E+06
I-134	2.196E-04	4.47E+05	5.30E+05
I-135	2.913E-05	2.53E+06	2.95E+06
Cs-134	1.066E-08	6.86E+09	8.00E+09
Cs-136	6.124E-07	1.50E+08	1.70E+08
Cs-137	7.327E-10	1.03E+10	1.20E+10
Cs-138	3.588E-04	3.59E+05	4.10E+05
Ba-139	1.397E-04	1.05E+05	1.19E+05
Ba-140	6.297E-07	2.04E+07	2.34E+07
Ba-141	6.323E-04	4.17E+04	4.75E+04
Ba-142	1.090E-03	4.44E+04	5.06E+04
La-140	4.781E-06	1.92E+07	2.18E+07
La-142	1.249E-04	7.36E+05	8.84E+05
Ce-141	2.468E-07	1.37E+07	1.54E+07
Ce-143	5.835E-06	2.31E+06	2.63E+06
Ce-144	2.822E-08	6.95E+07	8.04E+07
Pr-143	5.916E-07	0.00E+00	0.00E+00
Pr-144	6.685E-04	1.83E+03	2.11E+03
Nd-147	7.306E-07	8.39E+06	1.01E+07
W-187	8.056E-06	2.36E+06	2.74E+06
Np-239	3.399E-06	1.71E+06	1.98E+06
K-40	1.717E-17	0.00E+00	0.00E+00
Co-57	2.961E-08	1.88E+08	2.07E+08
Sr-85	1.237E-07	0.00E+00	0.00E+00
Y-88	7.523E-08	0.00E+00	0.00E+00
Nb-94	1.083E-12	0.00E+00	0.00E+00
Nb-97	1.602E-04	1.76E+05	2.07E+05
Cd-109	1.729E-08	0.00E+00	0.00E+00
Sn-113	6.970E-08	0.00E+00	0.00E+00
Ba-133	2.047E-09	0.00E+00	0.00E+00
Te-134	2.764E-04	2.22E+04	2.66E+04
Ce-139	5.828E-08	0.00E+00	0.00E+00
Hg-203	1.722E-07	0.00E+00	0.00E+00

APPENDIX 3-A

CALCULATION OF ALLOWABLE RELEASE RATES

Primary Assumptions:

1. Unit 3 and Unit 2 effective dose factor Keff, values are equivalent.
2. Each unit shares 50% of the total allowable release rate, Q, in Ci s-1. Therefore, Q3 = Q2 for instantaneous releases.

Given:

	LOCATION	UNIT 3	UNIT 2	LOCATION
Noble Gas X/Q (sec/m^3)	(SSW 380m)	4.85E-6	2.54E-6	(SSW 579m)
Wv(in) Annual Average Site Boundary X/Q (sec/m^3)	(SW 350m)	5.21E-6	2.54E-6	(SSW 579m)
Wv(gp) Annual Average Ground Plane Site Boundary Deposition	(SSW 380m)	2.72E-8 m^{-2}		
Wv(f) Food Pathway Deposition Parameter	(SSW 5mi)	1.35E-9 m^{-2}		
Wv(in) Annual Average X/Q (5 mi)	(SSW 5mi)	7.22E-7 sec/m^3		
Wv(in) Inhalation Pathway Nearest Residence	(SSW 1526m)	8.96E-7 sec/m^3		
Wv(gp) Annual Average Ground Plane Deposition Parameter Nearest Residence	(S 1379m)	6.14E-9 m^{-2}		

INSTANTANEOUS
RELEASE RATE VS. DOSE RATE
UNITS 2 & 3

Indian Point 3 and 2 share a common site boundary limit of 500 mrem/yr. This 500 mrem/yr limit is divided between units 3 and 2 based upon a 50-50 split of the release rate in μCi/sec. Because each unit has its own X/Q and K eff, equal μCi/sec discharges from each plant will result in different dose rates for each plant at the most restrictive site boundary location. In order to define the split of the 500 mrem/yr limit, units 3 and 2 have agreed to base the dose split on the mixture presented in Table 3A-1 (Appendix 3-A, page 4).

Dose Split Between IP2 and IP3

A. Instantaneous Dose Rate: Calculation of Allowable Release Rate: Noble Gas Release Including Finite Cloud Correction for Site Boundary.

i. Whole Body

Given:

a) site limit is 500 mrem/yr
b) IP3 X/Q for SSW sector = 4.85E-6 sec/m^3
c) K eff for IP3 SSW sector = 1.55E+3 $\frac{\text{mrem - m}^3}{\mu\text{Ci - yr}}$
d) IP2 X/Q for SSW sector = 2.54E-6 sec/m^3
e) IP2 K eff for SSW sector = 2.43E+3 $\frac{\text{mrem - m}^3}{\mu\text{Ci - yr}}$
f) Q = μCi/sec

Solve for Q:

$$Q[(X/Q_3)\ (K\ eff_3) + (X/Q_2)\ (K\ eff_2)] = 500\ \text{mrem/yr}$$

$$Q[(4.85E\text{-}6)\ (1.55E\text{+}3) + (2.54E\text{-}6)\ (2.43E\text{+}3)] = 500\ \text{mrem/yr}$$

$$Q = 3.65E\text{+}4\ \mu\text{Ci/sec}$$

ii. Skin

Given:

a) site limit is 3,000 mrem/yr
b) IP3 X/Q for SSW sector = 4.85E-6 sec/m^3
c) IP3 (Li + 1.1 Mi) = 3.31E+3 $\frac{\text{mrem - m}^3}{\mu\text{Ci - yr}}$
d) IP2 X/Q for SSW sector = 2.54E-6 sec/m^3
e) IP2 (Li + 1.1 Mi) = 4.38E+3 $\frac{\text{mrem - m}^3}{\mu\text{Ci - yr}}$
f) Q = μCi/sec

Solve for Q:

$Q[(X/Q)_1 (Li + 1.1 Mi)_1 + (X/Q)_2 (Li + 1.1 Mi)_2] = 3{,}000$ mrem/yr

$Q[(4.85E-6)\ (3.31E+3) + (2.54E-6)\ (4.38E+3)] = 3{,}000$ mrem/yr

$Q = 1.10E+5\ \mu Ci/sec$ (less restrictive than Whole Body)

Solve for dose commitments per site with Q = 3.65E+4 μCi/sec (whole body dose and the most restrictive rate).

Indian Point 3:

$$(3.65E+4\ \mu Ci/sec)\ (4.85E-6\ sec/m^3)\ (1.55E+3\ \frac{mrem - m^3}{\mu Ci - yr}) = 275\ mrem/yr$$

Indian Point 2:

$$(3.65E+4\ \mu Ci/sec)\ (2.54E-6\ sec/m^3)\ (2.43E+3\ \frac{mrem - m^3}{\mu Ci - yr}) = 225\ mrem/yr$$

Unit 3 has 55.4% and Unit 2 has 44.6% of the 500 mrem/yr Whole Body Dose instantaneous release rate limit.

Solve for the less restrictive skin dose rate limit for IP3:

$$(1.10E+5\ \mu Ci/sec)\ (4.85E-6\ sec/m^3)\ (3.31E+3\ \frac{mrem - m^3}{\mu Ci - yr}) = 1766\ mrem/yr$$

B. The conservative instantaneous release rate calculated in above step A.1 is based upon the mixture presented in Table 3A-1 solely for the purpose of splitting the dose rate as shown above. To determine an administrative release rate for IP3 based on the 275 mrem/yr dose rate (i.e., no sharing), the mix in Table 3-8 is used. The 275 mrem/yr limit and the mixture presented in Table 3-8 are used to calculate a μCi/sec instantaneous limit for IP3.

Given:

a) IP3 site boundary limit is 275 mrem/yr
b) IP3 X/Q ssw sector = 4.85E-6 sec/m³
c) IP3 K eff (Table 3-8) = $1.49E+3\ \frac{mrem - m^3}{\mu Ci - yr}$
d) Q = μCi/sec

Solve for Q:

$Q(4.85E-6)\ (1.49E+3) = 275$ mrem/yr
$Q = 3.81E+4\ \mu Ci/sec$

Table 3A-1

MIXTURE FOR SHARED LIMITS

Isotope	Abundance
Kr-85m	.0362
Kr-88	.0790
Xe-133	.4027
Xe-135m	.0740
Xe-138	.1467
Xe-135	.2614

	IP3	IP2
Ki*	1.55E+3	2.43E+3
Li	1.51E+3	1.51E+3
Mi*	1.63E+3	2.61E+3

Ki units $\frac{\text{mrem - m}^3}{\mu\text{Ci - yr}}$

Li units $\frac{\text{mrem - m}^3}{\mu\text{Ci - yr}}$

Mi units $\frac{\text{mrad - m}^3}{\text{mrem - yr}}$

The SSW sector is the most restrictive for both whole body exposure and skin exposure for both units 2 and 3.

* Dose factors Ki and Mi are finite cloud corrected for each reactor unit and hence they are not identical.

RELEASE RATE LIMITS

QUARTERLY AND ANNUAL AVERAGE NOBLE GAS RELEASES

For a Calendar Quarter	For A Calendar Year
gamma air dose 5 mrad limit	gamma air dose 10 mrad limit
beta air dose 10 mrad limit	beta air dose 20 mrad limit

I. Assumptions:

1. Doses are delivered to the air at the site boundary.
2. Finite cloud geometry is assumed for noble gas releases at site boundary.
3. X/Q for Unit 3 = 4.85E-6 sec/m³, (Q = release rate μCi/sec)
4. Gamma air dose factor (M), Corrected for finite cloud geometry is: $M = 4.61E+2 \frac{\text{mrad - m}^3}{\mu\text{Ci - yr}}$

   (time average mix from Table 3-8)
5. Beta air dose factor (N) is unaffected by finite cloud assumption: $N = 1.34E+3 \frac{\text{mrad - m}^3}{\mu\text{Ci - yr}}$ (from Table 3-8)

II. Calculation of Quarterly Release Rates:

a) for gamma dose: (Q)x[(M)(X/Q)] less than or equal to 5 mrad/qtr (20 mrad/yr)

b) for beta dose: (Q)x[(N)(X/Q)] less than or equal to 10 mrad/qtr (40 mrad/yr)

Solve for a. $Q = \frac{5 \text{ mrad/qtr}}{(\frac{1}{4}\text{yr})\ (M)\ (X/Q)} = 8.95E+3\ \mu\text{Ci/sec} = 8.95E-3\ \text{Ci/sec}$

Solve for b. $Q = \frac{10 \text{ mrad/qtr}}{(\frac{1}{4}\text{yr})\ (N)\ (X/Q)} = 6.15E+3\ \mu\text{Ci/sec} = 6.15E-3\ \text{Ci/sec}$

Based on the above analysis, the beta dose is limiting for time average doses. Therefore, the allowable quarterly average release rate is 6.15E-3 Ci/sec.

III. Calculation of Calendar Year Release Rate

Annual limits are one half of quarterly limits. Therefore (using Beta air dose as most limiting), the maximum allowable annual average release rate is 3.08E+3 μCi/sec or 3.08E-3 Ci/sec.

NOTE: M and N values are taken from Table 3-8 for time average release mixture.

ALLOWABLE INSTANTANEOUS RELEASE RATE
IODINE 131/PARTICULATES (T½ GREATER THAN 8 DAYS)

Given: $W_v(in)$: X/Q for IP3 = 5.21E-6 sec/m³ @ 350m SW
$W_v(in)$: X/Q for IP2 = 2.54E-6 sec/m³ @ 579m SSW

$PI(c) = 1.62\ E7\ \frac{mrem/yr}{\mu Ci/m^3}$

Assumed Pathway: Child Inhalation at Unrestricted Area Boundary

Solve the following equation for Q:

$$[(Q)PI(c)(W_v(in))\ Unit\ 3] + [(Q)PI(c)(W_v(in))\ Unit\ 2] = 1500\ mrem/yr$$

IP3: $(Q)PI(c)(W_v(in))_3 = Q\ 1.62E7\ \frac{mrem/yr}{\mu Ci/m}\ 5.21E-6\ s/m^3 = Q\ 84.4\ \frac{mrem/yr}{\mu Ci/s}$

IP2: $(Q)PI(c)(W_v(in))_2 = Q\ 1.62E7\ \frac{mrem/yr}{\mu Ci/m}\ 2.54E-6\ s/m^3 = Q\ 41.1\ \frac{mrem/yr}{\mu Ci/s}$

The sum equals (125.5)(Q) mrem/yr per μCi/s.

Limit is 1500 mrem/yr per <u>site</u>:

Therefore: $125.5\ Q\ \frac{mrem/yr}{\mu Ci/s} = 1500\ mrem/yr$

Q = 1.20E+1 μCi/s
Q = 1.20E-5 Ci/s per unit

IP3 Dose Contribution: $1.20E+1\ \frac{\mu Ci}{s} * 1.62E7\ \frac{mrem}{yr}\ \frac{m^3}{\mu Ci} * 5.21E-6\ \frac{s}{m^3} = 1008\ mrem/yr$

IP2 Dose Contribution: $1.20E+1\ \frac{\mu Ci}{s} * 1.62E7\ \frac{mrem}{yr}\ \frac{m^3}{\mu Ci} * 2.54E-6\ \frac{s}{m^3} = 492\ mrem/yr$

Sum = 1500 mrem/yr

Approximately a 67.2% / 32.8% dose split for IP3 and IP2 respectively.

ALLOWABLE RELEASE RATES FOR IODINE/PARTICULATE TIME AVERAGE DOSES QUARTERLY AND ANNUAL DOSE LIMITS

There are two receptor pathways considered:

primary receptor - child at the nearest residence, and
secondary receptor - infant at 5 miles.

As discussed in the ODCM, both receptors will be considered when evaluating time averaged dose commitments. For the purpose of setting an administrative limit on quarterly and time average release rates, the secondary receptor was chosen because it proved more limiting (only long term releases were considered, e.g. the possibility of intermittent releases was not considered for the calculation).

Calculations for both receptor locations are included in this attachment for reference.

IODINE TIME AVERAGE*
(Primary Receptor)

Child at the nearest residence:

Given:** X/Q = 8.96E-7 s/m³ at 1526m SSW inhalation
D/Q = 6.14E-9 1/m² at 1279m S ground plane deposition factor

RI(c) = 1.62E+7 $\frac{\text{mrem/yr}}{\mu\text{Ci/m}^3}$, child inhal. dose factor for I-131

RG = 2.1E+7 m² $\frac{\text{mrem/yr}}{\mu\text{Ci/s}}$

RV(c) = 4.77E+10 m² $\frac{\text{mrem/yr}}{\mu\text{Ci/sec}}$ vegetation path for child

Calculate the allowable time average release rate by solving the following equation for Q:

Q[(RIc)(X/Q) + (RG)(D/Q) + (RVc)(D/Q)] = limit in mrem/yr

(Q)(RIc)(X/Q) = 14.5 Q mrem/yr per μCi/s

(Q)(RG) (D/Q) = 0.1 Q mrem/yr per μCi/s

(Q)(RVc)(D/Q) = 293 Q mrem/yr per μCi/s

The sum equals 308 Q mrem/yr per μCi/s.

Quarterly time average limit is 7.5 mrem to any organ (or 30 mrem/yr).

Solving for Q yields: Q 308 $\frac{\text{mrem/yr}}{\mu\text{Ci/s}}$ = 30 mrem/yr

Q = 9.74E-2 μCi/s
= 9.74E-8 Ci/s

Annual limit is ½ quarterly limit: 15 mrem to any organ (15 mrem/yr).

$$Q = \frac{9.74E-8}{2} = 4.87E-8 \text{ Ci/s}$$

* Iodine 131 and particulates with half-lives greater than 8 days are assumed to be I-131 for the purposes of this calculation which is a conservative assumption since this nuclide has the highest thyroid dose factor of all iodines and particulates.

** Because the H-3 dose factor is about 4 orders of magnitude less than the Iodine dose factor, its contribution to the total dose is considered negligible.

IODINE TIME AVERAGE*
(Secondary Receptor)

Infant at 5 miles:

Given:** X/Q = 7.22E-7 s/m³ downwind at 5 mi.
D/Q = 1.35E-9 1/m² downwind at 5 mi.

RI(i) = 1.48E7 mrem/yr per μCi/m³, infant inhal. dose factor

RG = 2.1E7 m² mrem/yr per μCi/s, ground plane dose factor

RC(i) = 1.06E12 m² mrem/yr per μCi/s, cow-milk pathway dose factor for infant

RV(i): The infant vegetation factor is not calculated because the infant is assumed to have no intake of fresh vegetables.

Calculate the allowable time average release rate by solving the following equation for Q:

Q[(RIi)(X/Q) + (RG)(D/Q) + (RCi)(D/Q)] = limit in mrem/yr

Q(RIi)(X/Q) = 10.7 mrem/yr per μCi/s

Q(RG)(D/Q) = 0.03 mrem/yr per μCi/s

Q(RCi)(D/Q) = 1431 mrem/yr per μCi/s

The sum yields 1442 Q mrem/yr per μCi/s.

Quarterly time average limit is 7.5 mrem to any organ (or 30 mrem/yr).

Solving for Q yields: Q 1442 mrem/yr per μCi/s = 30 mrem/yr

Q = 2.08E-2 μCi/s
= 2.08E-8 Ci/s

Annual limit is ½ quarterly limit: 15 mrem to an organ (or 15 mrem/yr).

Q = 1.04E-8 Ci/s

* See note under Primary Receptor Calculation.
** See note under Primary Receptor Calculation.

Figure 3-1

Gaseous Radioactive Waste Effluent System Flow Diagram

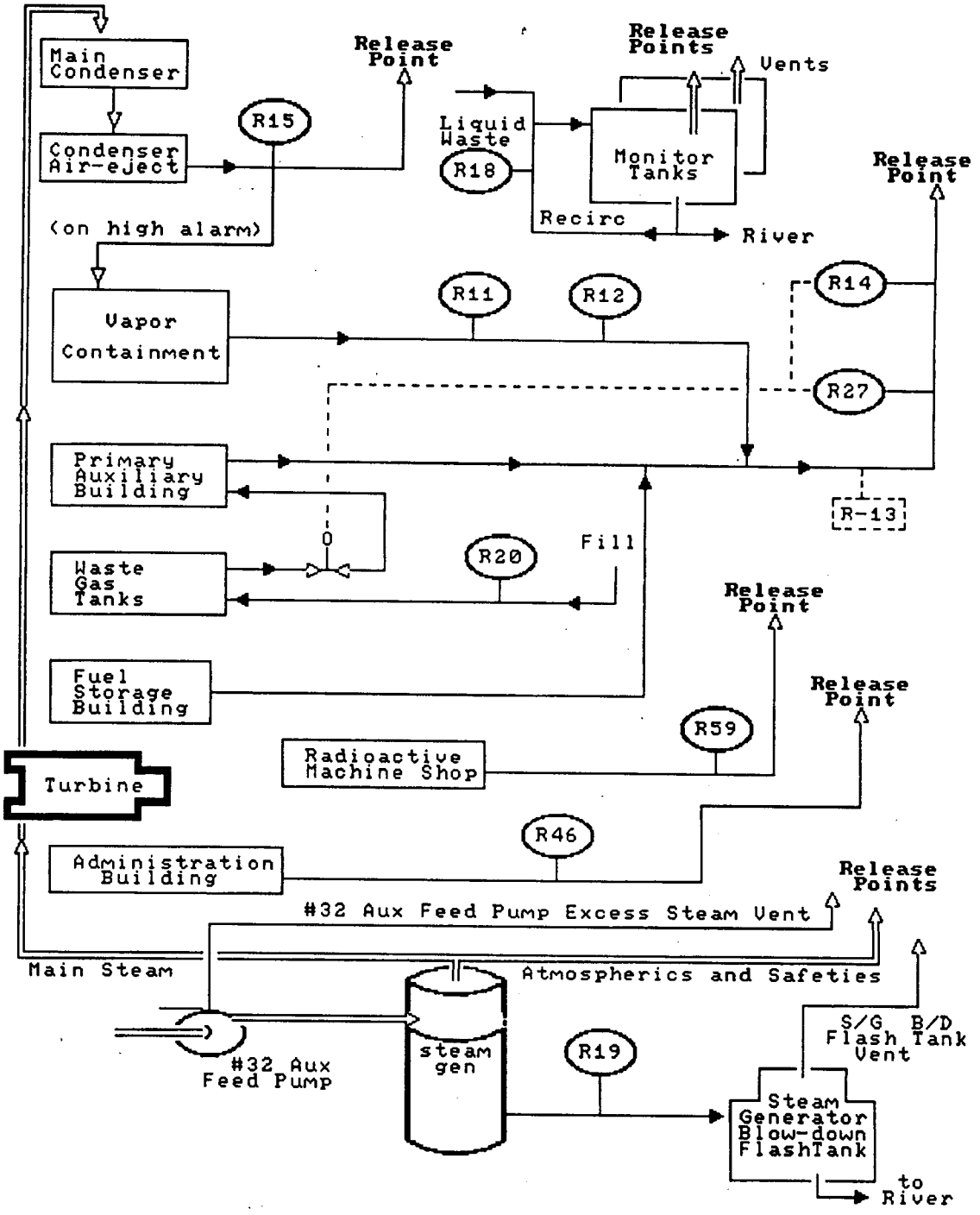

4.0 SAMPLE LOCATIONS

Figure 4.1 is a map which shows the location of environmental sampling points within 2.5 miles of the Indian Point Plant and Figure 4.2 is a map providing the same information for points at greater distances from the plant. Table 4.1 provides a description of environmental sample locations and the sample types collected at each of these locations.

The locations listed in Table 4.1 are the RECS designated locations only. The air sample locations were chosen considering the highest average annual D/Q sectors and the practicality of locating continuous air samplers. There are additional sample locations not listed in Table 4.1 that may be maintained to provide the program with additional supporting information.

RADIOLOGICAL ENVIRONMENTAL MONITORING - SAMPLING STATION
FIGURE 4-1

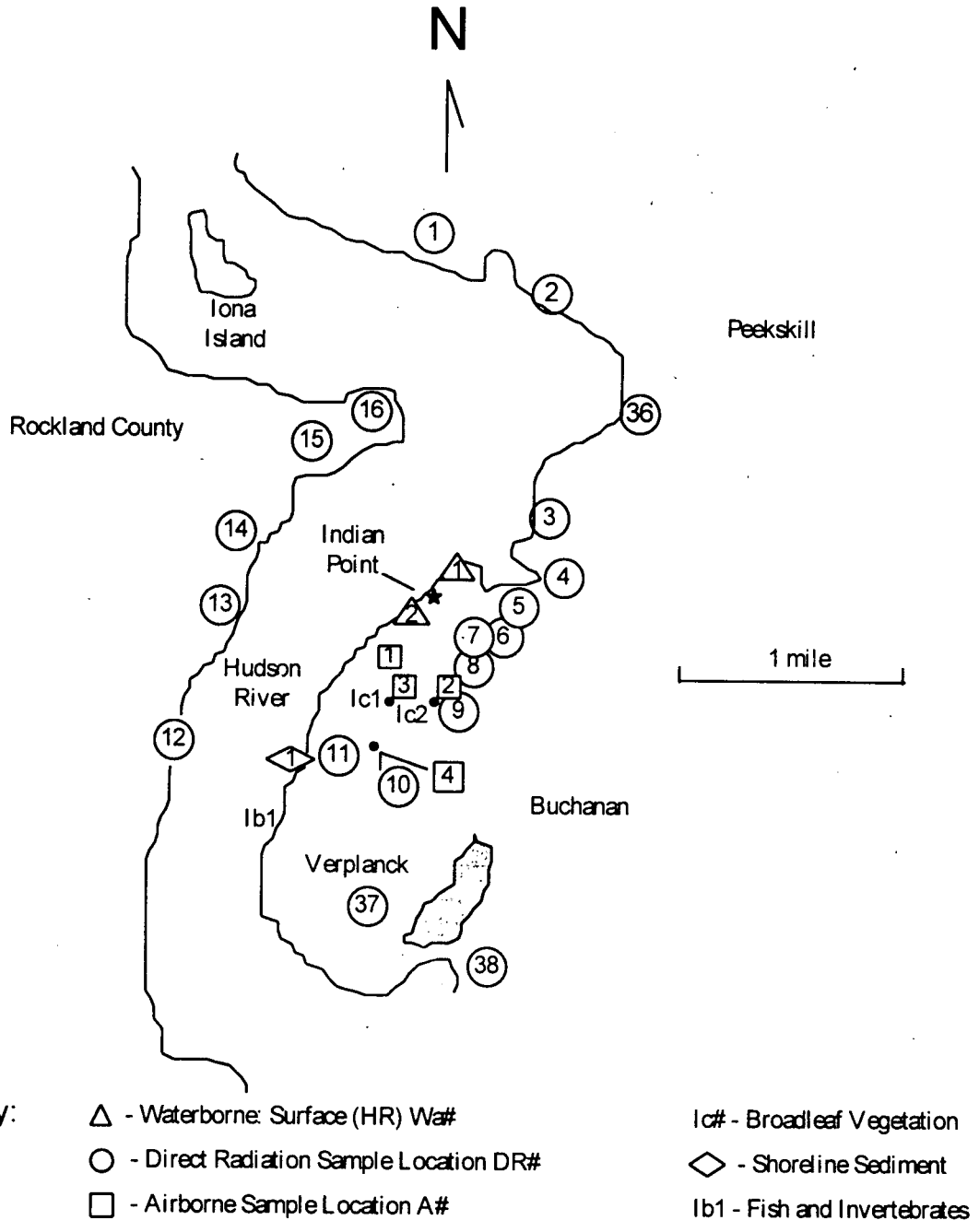

Key:

- △ - Waterborne: Surface (HR) Wa#
- ○ - Direct Radiation Sample Location DR#
- □ - Airborne Sample Location A#
- Ic# - Broadleaf Vegetation
- ◇ - Shoreline Sediment
- Ib1 - Fish and Invertebrates

RADIOLOGICAL ENVIRONMENTAL MONITORING - SAMPLING STATIONS
FIGURE 4-2

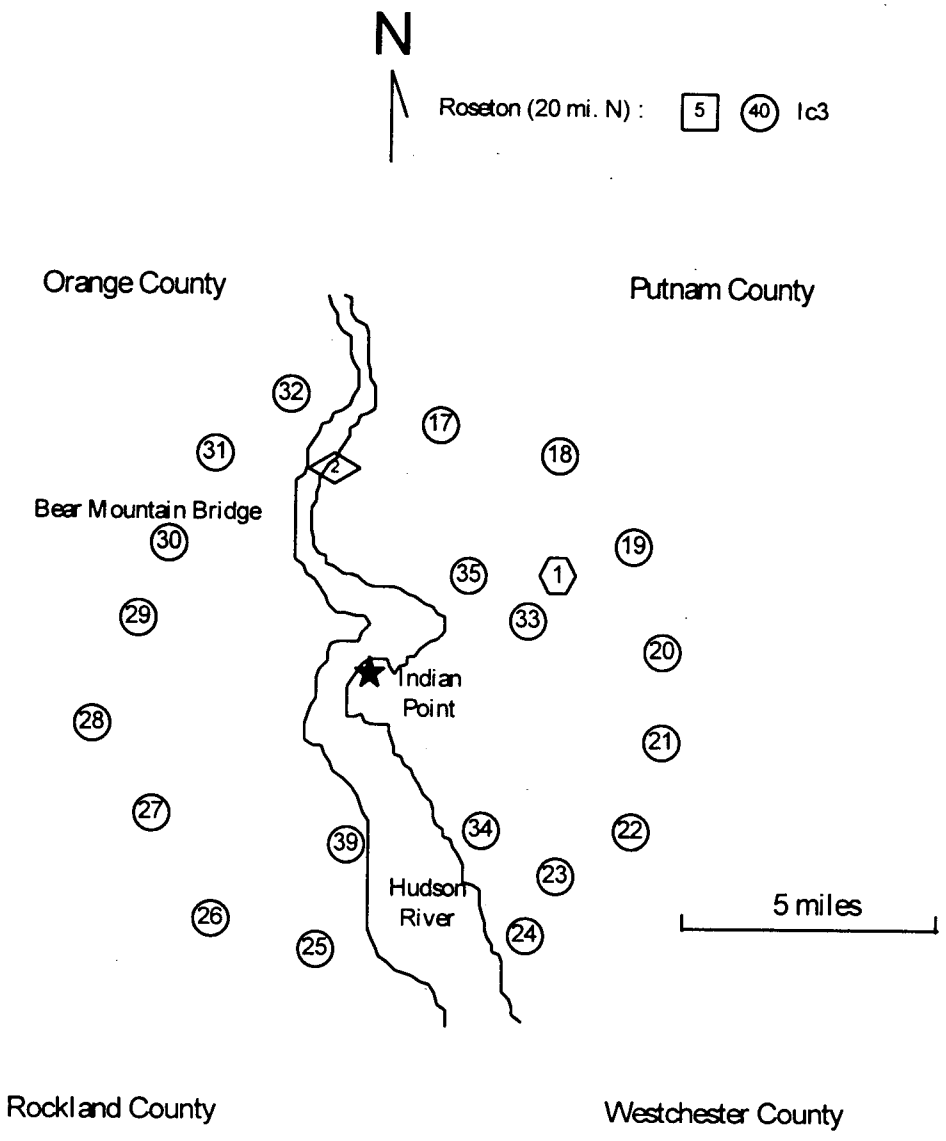

Key:
- ○ - Direct Radiation Sample Location DR#
- □ - Airborne Sampling Location A#
- ◇ - Shoreline Sediment

Ic3 - Broadleaf Vegetation
⬡ Waterborne: Drinking

TABLE 4.1
INDIAN POINT STATION
ENVIRONMENTAL SAMPLING STATION POINTS

RETS SAMPLE DESIGNATION	LOCATION	DISTANCE
Exposure Pathway/Sample: Direct Radiation		
DR1	Roa Hook	2 mi - N
DR2	Old Pemart Ave	1.8 mi - NNE
DR3	Charles Point	0.8 mi - NE
DR4	Lents Cove	0.5 mi - ENE
DR5	Broadway and Bleakley	0.4 mi - E
DR6	Sector Six Reuter Stokes Pole	0.5 mi - ESE
DR7	Water Meter House	0.3 mi - SE
DR8	Service Center Building	0.4 mi - SSE
DR9	SE Corner	0.6 mi - S
DR10	NYU Tower	0.8 mi - SSW
DR11	White Beach	0.9 mi - SW
DR12	Gays Hill Road South	1.5 mi - WSW
DR13	Gays Hill Road North	1 mi - W
DR14	Rt. 9W across from R/S #14	1.2 mi - WNW
DR15	Rt. 9W. South of Ayers Road	1 mi - NW
DR16	Ayers Road	0.9 mi - NNW
DR17	Rt. 9D Garrison	5 mi - N
DR18	Gallows Hill Road	5 mi - NNE
DR19	Westbrook Drive	5 mi - NE
DR20	Lincoln Road - Cortlandt	4.8 mi - ENE
DR21	Croton Ave. - Cortlandt	5 mi - E
DR22	Colabaugh Pond Rd. Cortlandt	5 mi - ESE
DR23	Mt. Airy & Windsor Road	5 mi - SE
DR24	Croton Point	6.4 mi - SSE
DR25	Warren Ave. Haverstraw	4.8 mi - S
DR26	Railroad Ave. & 9W Haverstraw	4.6 mi - SSW
DR27	Willow Grove Road & Birch Dr.	5 mi - SW
DR28	Palisades Parkway-Lake Welch	5 mi - WSW
DR29	Palisades Parkway	4 mi - W
DR30	Anthony Wayne Park	4.5 mi - WNW
DR31	Palisades Pkwy South Exit	4.7 mi - NW
DR32	Rt. 9W Fort Montgomery	4.8 mi - NNW
DR33	Hamilton Street	3 mi - NE
DR34	Furnace Dock	3.5 mi - SE
DR35	Highland Ave. & Sprout Brook Rd. (near rock cut)	3 mi - NNE
DR36	Lower South Street	1.3 mi - NE
DR37	Verplank-Broadway & Sixth Str	1.3 mi - SSW
DR38	Cortlandt Yacht Club	1.6 mi - S
DR39	Grassy Point	3.3 mi - SSW
N/A	Control Location 1 (Roseton)	20 mi - N

TABLE 4.1 (Continued)

RETS SAMPLE DESIGNATION	LOCATION	DISTANCE
ExposurePathway/Sample:	Airborne	
A1	Algonquin Gas Line	0.25 mi - SW
A2	NYPA Training Bldg	0.4 mi - S
A3	Met Tower	0.4 mi - SSW
A4	NYU Tower	0.8 mi - SSW
A5	Control Location 1 (Roseton)	20 mi - N
Exposure Pathway/Sample:	Waterborne - Surface (Hudson River Water)	
Wa1	Plant Inlet	N/A
Wa2	Discharge Canal	N/A
Exposure Pathway/Sample:	Waterborne - Drinking	
Wb1	Camp Field Reservoir	3.5 mi - NE
Exposure Pathway/Sample:	Sediment from Shoreline	
Wc1	White Beach	0.9 mi - SW
Wc2	Manitou Inlet	4.5 mi - NNW

Exposure Pathway/Sample: Milk

There are no milk animals within 8 km distance of Indian Point; therefore, no milk samples are taken. See Note 2.

Exposure Pathway/Sample: Ingestion-Fish and Invertebrates

The RECS designate two required sample locations labeled Ib1 and Ib2. The downstream Ib1 location and samples will be chosen where it is likely to be effected by plant discharge. Ib2 will be a location upstream that is not likely to be effected by plant discharge. The following fish species are considered acceptable sample species.

Striped Bass	Bluegill Sunfish
White Perch	Pumpkin Seed Sunfish
White Catfish	Blueback Herring
American Eel	Crabs

Exposure Pathway/Sample: Ingestion-Food Products (Broad Leaf Vegetation) (See Note 1)

Ic1	Met Tower, SSW Sector	0.4 miles - SSW
Ic2	NYPA Training Bldg, S Sector	0.4 miles - S
Ic3	Roseton (North)	20 miles - N

TABLE 4.1

NOTES

NOTE 1

Radiochemical separation and analysis is not required for I-131 vegetation samples: as long as the required RECS LLD is met using gamma spectroscopy.

NOTE 2

The requirement to obtain and analyze samples from milch animals within 8 km of the site is intended to ensure monitoring of the "cow-milk" and vegetation pathways. Such samples would only be of value were the milk used for human consumption. Thus, only milch animals whose milk is used for human consumption are considered in the pathway and sample evaluation.

3.4 Backup Simplified Dose Methodology

The dose calculation procedures described in this section are provided for use as a backup whenever the primary computer methodology cannot be followed.

3.4.1 Instantaneous Dose Rates - Noble Gas Releases

When the instantaneous limit applies, the process radiation monitor response or release rate can be averaged over a one-hour time interval.

3.4.1.1 This section describes the alternative calculational methods to meet the requirements of Paragraph 3.2.1. These methods provide calculational results as per section 3.3.1.

3.4.1.2 To determine an acceptable noble gas instantaneous release rate in uCi/sec, a standard isotopic mixture of noble gases may be assumed. This isotopic mixture was measured for a mixture of isotopes typical of reactor coolant with exposed fuel. This requirement is evaluated at the worst sector of the unrestricted area boundary. Based on this isotopic mixture, standard Ks, Ls, Ms, and Ns (lower case s denotes a weighted sum, see Table 3-8) can be determined using the technique presented in paragraph 3.3.1.2 and Ki, Li, Mi, and Ni values from Tables 3.4-7. The data and results of this calculation are shown in Table 3-8.

3.4.1.3 The isotopic mixture chosen was obtained from a reactor coolant sample during an operating period with exposed fuel. Table 3-8 contains the mixture data and the fractional relative abundance of each isotope. These standard factors can be used with the equations and limits presented in Section 3.3.1.

3.4.1.4 Utilizing the equations from Paragraph 3.4.1.3 and the values from Table 3-8, maximum release limits for all noble gases in μCi/sec can be calculated as follows:

Maximum instantaneous release rates:

$$Qt = \frac{275}{Ks(X/Q)} = \frac{275}{(1.49E+3)(4.85E-6)} = 3.81\ E+4\ \frac{\mu Ci}{sec}\ \text{(Whole Body)}$$

$$Qt = \frac{1766}{(Ls + 1.1\ Ms)(X/Q)} = \frac{1766}{3.16E+3(4.85E-6)} = 1.15E+5\ \frac{\mu Ci}{sec}\ \text{(Skin)}$$

3.4.1.5 For individual release rate determinations, alternate computer codes and/or a Hand Calculation Template serve as back up methodologies should the primary computer method be inoperable. These methods comply with calculations in Section 3.3.1.

3.4.2 Instantaneous Dose Rates-I-131, Particulates w/t½>8 days, & H-3

3.4.2.1 This section describes the alternative calculational method to meet the requirements of Paragraph 3.2.1. The purposes of this method is to provide backup calculational techniques, both computer aided and hand calculated, which approximate section 3.3.2.

3.4.2.2 To determine an acceptable iodine and particulate release rate, it is assumed that the limit on these releases shall be met if the total noble gas concentration in the VC is at least a factor of 20,000 more than the concentration of radioiodine and long lived particulates or VC iodines and long lived particulates are less than 1E-7 μCi/cc. This has historically been the case and this assures that the noble gas activity will be limiting.

3.4.2.3 Backup instantaneous dose rate calculations can be performed with an alternate computer code or by formatted hand calculations. These methods are identical to section 3.3.2.

3.4.3 Time Averaged Dose - Noble Gas Releases

3.4.3.1 This section describes alternative methods of meeting the requirements of Paragraphs 3.2.2 and 3.2.4, and the alternative methods of implementing the calculation techniques presented in Section 3.3.3.

3.4.3.2 The values of $\overline{Ki}$, $\overline{Li}$, $\overline{Mi}$, and $\overline{Ni}$ for the Plant Vent (PV) mixed mode releases and the Monitor Tank (MT) ground plane releases are determined for each release using the dispersion parameter for the site boundary in the worst sector. The calculations are as follows:

$$PV\ \overline{Ki} = (Ki)*(X/Q)PV \quad \text{and} \quad MT\ Ki = (\overline{Ki})*(X/Q)MT$$

$$PV\ \overline{Li} = (Li)*(X/Q)PV \quad \text{and} \quad MT\ Li = (\overline{Li})*(X/Q)MT$$

$$PV\ \overline{Mi} = (Mi)*(X/Q)PV \quad \text{and} \quad MT\ Mi = (\overline{Mi})*(X/Q)MT$$

$$PV\ \overline{Ni} = (Ni)*(X/Q)PV \quad \text{and} \quad MT\ Ni = (\overline{Ni})*(X/Q)MT$$

Where:

Ki = The total body dose factor due to gamma emissions for each identified noble gas radionuclide in mrem/yr per μCi/m^3 (finite cloud correction used).

Li = The skin dose factor due to gamma emissions for each identified noble gas radionuclide in mrem/yr per μCi/m^3.

Mi = The air dose factor due to gamma emissions for each identified noble gas radionuclide in mrem/yr per $\mu Ci/m^3$ (finite cloud correction used).

Ni = The air dose factor due to beta emissions for each identified noble gas radio- nuclide in mrad/yr per $\mu Ci/m^3$.

(X/Q)PV = The highest calculated annual average dispersion parameter for the noble gas pathway at the unrestricted area boundary, 4.85E-6 sec/m^3 and applicable to plant vent mixed mode releases.

(X/Q)MT = The highest calculated annual average X/Q for ground level monitor tank noble gas release pathway, 5.00E-5 sec/m^3.

3.4.3.3 Determine weighted average dose factors as follows:

All values of $\bar{K}i$, $\bar{L}i$, $\bar{M}i$, and $\bar{N}i$ are shown in Table 3-4 through 3-7 for the unrestricted area boundary.

Each of the following expressions is summed over all the nuclides:

$$PV\ Kt = \sum[\bar{K}i * (Ci/Ct)]$$

$$PV\ Lt = \sum[\bar{L}i * (Ci/Ct)]$$

$$PV\ Mt = \sum[\bar{M}i * (Ci/Ct)]$$

$$PV\ Nt = \sum[\bar{N}i * (Ci/Ct)]$$

For the monitor tank pathway MT Kt, MT Lt, MT Mt, and MT Nt are calculated in the same way as for plant vent (PV) releases above, except that Ci and Ct apply to gaseous activity for the monitor tank pathway.

<u>Where</u>:

Ci = Concentration of isotope i ($\mu Ci/cc$) in analysis, t (for either PV or MT pathway)

Ct = Concentration of all noble gas isotopes ($\mu Ci/cc$) for a specific analysis, (for either the PV or MT pathway)

These calculations can be performed by hand (via formatted procedure) or by using alternate computer codes to compute all or part of the entire dose calculation.

3.4.3.4 Calculate resultant doses and compare with limits as per 3.3.3. The sum of all releases in a calendar quarter or calendar year should be compared to the limits of Section 3.2.2 and 3.2.4 as appropriate for gamma air dose and beta air dose.

3.4.4 Time Averaged Dose-Iodine 131 and Particulates w/t½>8 days& H-3

3.4.4.1 This section describes the alternate methods of meeting the requirements of Paragraphs 3.2.3 and 3.2.4 and of implementing the calculational techniques presented in Section 3.3.4.

3.4.4.2 If the primary computer method is inoperable, dose calculations can be performed by:

a) an alternate computer code which complies with Section 3.3.4, using all identified Iodine and Particulate isotop

- or -

b) hand calculations (via a formalized departmental procedure) which comply with Section 3.3.4.

3.4.4.3 Sum the Iodine, Particulate, and Tritium dose contributions and compare quarterly and annual totals to the limits described in Section 3.2.3.

3.5 Calculation of Meteorological Dispersion Factors

3.5.1 For the purpose of these calculations, the site boundary was taken to be the unrestricted area boundary. The distances to the site boundary, as measured from the plant vent on top of the IP3NPP primary containment, are shown in Table 3-11 for each of the 16 major compass sectors. The distances to the nearest residence in each of these sectors is also shown on this table. In the sectors where the Hudson River is the site boundary, the opposite shore is assumed as the boundary of the unrestricted area. This is based on the definition of unrestricted area in NUREG 0133 (Ref. 1, Section 2.2, Page 6) which states that the unrestricted area boundary does not include areas over bodies of water. The nearest opposite shore distance is five times that of the closest land restricted area boundary. Therefore, these locations are unimportant when evaluating the maximum unrestricted area boundary concentrations.

3.5.2 The atmospheric transport and diffusion model used in the evaluation of dispersion and deposition factors is the sector-average straight-line model in Regulatory Guide 1.111 (Ref. 15) for mixed-mode releases with plume-rise effects, downwash, and building-wake correction. The analyses were carried out using the AEOLUS-3 computer code (Ref. 16) and are documented in detail in Ref. 17. Use was made of 10-years' worth of hourly meteorological data collected on site during the period 1981 through 1990 in accordance with the accuracy requirements of Regulatory Guide 1.23 (Ref. 18); the data recovery index for that period was in excess of 99%. Comparison of the new meteorological data with previous data shows no difference in the overall dispersion conditions at the site. In the analyses, wind-speed coefficients in Regulatory Guide 1.111 were used to extrapolate the measured wind speeds to the height of the main vent (on top of the primary containment). Also, the regulatory plume entrainment model was used to determine plume partitioning between ground-level and elevated releases, and no credit was taken for decay and depletion in transit. Recirculation effects were accounted for by confining in-valley flows within the valley out to a distance of 10 miles (up or down the valley) and allowing a portion of them to return to the site without additional dilution.

3.5.3 To meet the calculational requirements of Paragraphs 3.2.1, 3.2.2, and 3.2.4 the annual average dispersion factors were calculated for each compass sector at the site unrestricted area boundary. The most restrictive X/Q was determined to be 5.2E-06 s/m³ in the SW sector at 350 meters for inhalation and the SSW sector at 380 meters with an X/Q of 4.85E-6 s/m³ for external gamma radiation. The distances to the site boundary in each sector are listed in Table 3-9.

For the monitor tank release pathway, ground level X/Q values were assessed using the same data base as discussed in Section 3.5.2. The most restrictive X/Q was determined to be in the SW sector at 350m with a value of 5.00E-5 sec/m³ (concentration X/Q per Ref. 21).

3.5.4 To meet the calculational requirements of Paragraph 3.2.3 iodines and particulates, the annual average deposition and dispersion parameters were calculated for the nearest residence in each of the compass sectors. Distance to the nearest residence in each sector are listed in Table 3-11. Because no real dairy exists within 5 miles of the power plant, a hypothetical cow was placed in the worst meteorological sector at 5 miles. Dispersion and deposition parameters for both locations were calculated using the models and data described in Sec. 3.5.2 above and are as follows:

Wn(in) = The highest calculated annual average dispersion parameters for the inhalation pathway for the nearest residence in the unrestricted area located in the SSW sector at 1526 meters, 8.96E-7 sec/m³.

Wn(dep) = The highest calculated annual average deposition parameters for the ground plane and vegetation pathways for the nearest residence in the unrestricted area located in the S sector at 1279 meters, 6.14E-9 m^{-2}. For Tritium in the vegetation pathway Wn(in) is used.

Ws(in) = The calculated annual average dispersion factor for the inhalation pathway for the secondary receptor occurs in the downwind sectors at 5 miles, 7.22E-7 sec/m^3.

Ws(dep) = The highest calculated annual average deposition factor for the cow-milk vegetation, and ground plane pathways for the secondary receptor occurs in the downwind sectors at 5 miles, 1.35E-9 m^{-2}. For Tritium in the cow-milk and vegetation pathways Ws(in) is used.

NOTE: For the monitor tank pathway, iodines and particulates are effectively removed by demineralization, therefore dispersion parameters are not needed for nearest residence or at 5 miles.

3.5.5 To meet the calculational requirements of Paragraphs 3.2.2, 3.2.3 and 3.2.4 and the calculation methodologies described in Sections 3.3.4 and 3.3.3 short term release dispersion and deposition factors may need to be calculated. For this document short term release dispersion and deposition factors are determined from the long term annual average parameters. The method utilized is that presented by Sagendorf in NUREG 0324 (Ref. 5) as recommended by NUREG 0133 (Ref. 5, Section 3.3, Page 8); and makes use of a factor (F) developed for a particular compass sector and distance which is simply multiplied by the annual average dispersion or deposition parameter for the same sector and distance to develop the corresponding short-term parameter. This factor is defined as:

$$F = [NTOTAL/8760]^m$$

Where:

F = The non-dimensional correction factor used to convert annual average dispersion or deposition factors to short term dispersion or deposition factors.

NTOTAL = The total duration of a short-term release (or releases) in hours, during a chosen reporting period.

8760 = The total number of hours in a year.

ANMX = The calculated annual average dispersion (sec/m^3) or deposition (m^{-2}) factor for the compass sector and distance of interest.

F15MX = The short term dispersion (sec/m^3) or deposition (m^{-2}) factor for the compass sector and distance of interest. This is the 15th percentile value such that worse weather conditions can only exist 15% of the time and better weather conditions 85% of the time.

$$m = \frac{\log\ (ANMX/F15MX)}{\log\ (8760)}$$

The atmospheric transport and diffusion model used in the evaluation of short-term dispersion and deposition parameters (F15MX) is the Gaussian plume-centerline model in Regulatory Guide 1.145 (Ref. 19), adapted for mixed-mode releases with plume-rise effects, downwash, building-wake correction and plume meander considerations. As was the case with the annual average parameters, the analyses were carried out using the AEOLUS-3 computer code (Ref. 16) and the 10-year hourly meteorological data base; they are documented in detail in Reference 17.

Note that, in line with the guidance in NUREG-0133 (Ref. 1, Sec. 5.3.1, page 29), short-term releases (equal to or less than 500 hours per year) are considered to be cumulative over the calendar quarter or year, as appropriate. However, from Sec. 3.1.16 of the ODCM, and in line with Sec. 3.3, page 8 of NUREG-0133, gas-decay tank releases and containment purges have been determined to be sufficiently random so as to permit use of the long-term dispersion and deposition parameters for assessment of their radiological impact.

3.5.6 The short term 15th percentile dispersion or deposition factor for use in the equation of the preceding paragraphs and the simplified F factor equation are as follows:

a) Site Boundary Noble Gas:

F15MX (380m, SSW, inhalation) = 9.67E-5 sm^{-3}
ANMX (380m, SSW, inhalation) = 4.85E-6 sm^{-3}

$$F = [NTOTAL/8760]^m;\ m = \frac{\log(4.85E\text{-}6/9.70E\text{-}5)}{\log\ (8760)} = -0.330$$

$$F = [NTOTAL/8760]^{-0.330}$$

b) Nearest Residence Inhalation:

F15MX (730m, E, inhalation) = 3.00E-5 sm^{-3}
ANMX (1526m, SSW, inhalation) = 8.96E-7 sm^{-3}

$$F = [NTOTAL/8760]^m;m = \frac{\log(8.96E\text{-}7/3.00E\text{-}5)}{\log\ (8760)} = -0.387$$

$$F = [NTOTAL/8760]^{-0.387}$$

c) Nearest Residence Deposition:

F15MX (730m, E, Dep.) = 2.61E-7 m^{-1}
ANMX (1280m, S, Dep.) = 6.14E-9 m^{-1}

$$F = [NTOTAL/8760]^m; \quad m = \frac{\log(6.14E-9/2.61E-7)}{\log(8760)} = -0.413$$

$$F = [NTOTAL/8760]^{1-0.413}$$

d) 5 Mile Inhalation:

F15MX (5 mi, Down Valley Sectors, inhal.) = 6.19E-6 sm^{-3}
ANMX (5 mi, Down Valley Sectors, inhal.) = 7.22E-7 sm^{-3}

$$F = [NTOTAL/8760]m; \quad m = \frac{\log(7.22E-7/6.19E-6)}{\log(8760)} = -0.247$$

$$F = [NTOTAL/8760]^{-0.247}$$

e) 5 Mile Deposition:

F15MX (5 mi, Down Valley Sectors, Dep) = 9.50E-9 m^{-2}
ANMX (5 mi, Down Valley Sectors, Dep) = 1.35E-9 m^{-2}

$$F = [NTOTAL/8760]^m; \quad m = \frac{\log(1.35E-9/9.50E-9)}{\log(8760)} = -0.215$$

$$F = [NTOTAL/8760]^{-0.215}$$

3.6 Justification for and Use of Finite Cloud Assumption for Assessing Site Boundary Dose

Two models are currently available for the computation of doses from external gamma radiation:

a) The semi-infinite cloud model, which is conservatively applicable only for ground-level releases assumes ground level airborne concentrations are the same throughout a cloud that is large in extent relative to the photon path lengths in air.

b) The finite-cloud model, which takes into consideration the actual plume dimensions and the elevation above the receptor.

The semi-infinite cloud model (which is normally used in a variety of applications because of its simplicity) has two drawbacks:

It could be overly conservative for receptors close to the release point (particularly for ground-level releases under stable conditions with limited plume dispersion) due to the basis that the high concentration at the receptor is assumed to exist everywhere, and

It is not suitable for elevated releases since gamma radiation emanating from the radioactive cloud could still reach a receptor on the ground even though the plume is still aloft (i.e., even though the concentration at ground level is equal to zero).

For practical applications, it is possible to define isotope-dependent finite-cloud correction factors to express the difference in external radiation exposures between a finite cloud (which may be either at ground level or elevated) and a semi-finite cloud. Physically speaking, when such a correction factor is applied to the calculated ground-level concentration resulting from a given plume, it will define the equivalent concentration in a semi-infinite cloud which would yield the same external exposure as the finite cloud. Such a correction factor is a function of both the airborne radionuclide energy and of plume dispersion under the prevailing conditions. At distant receptors, where the plume dimensions reach limiting conditions, such correction factors reduce to unity.

The AEOLUS-3 code (which was used for the determination of the annual average dispersion and deposition parameters listed above), also has the capability of providing a basis for computation of isotope-specific finite-cloud correction factors based on the models in "Meteorology and Atomic Energy" (Ref. 20, Sec. 7.5.2). The code was used (along with the mixed-mode release option and the 10-year hourly meteorological data base) for the determination of the correction factors as would be applicable at the IP3 site boundary.

Note that the correction factors can be viewed as adjustment factors to the dose conversion factors in Regulatory Guide 1.109 (Ref. 3) for immersion in semi-infinite clouds. The nuclide specific correction factors and adjusted dose factors are presented in Tables 3.4 and 3.6 for the IP3 site boundary.

For the monitor tank pathway (ground release concentration X/Q), use of the finite cloud corrected data presented in tables 3-4 and 3-6 will provide a conservative result. The conservativism is due to the indicated correction factors for the mixed mode case yielding larger correction factors per nuclide. However, in the event that a ground level specific finite cloud correction factor is desired (which will yield lower calculated doses) the Xe-133 gamma X/Q value may be used as described in Reference 21.

Table 3-1a

ADULT INHALATION DOSE FACTORS

(mrem per pCi inhaled)

Isotope	BONE	LIVER	TOT BODY	THYROID	KIDNEY	LUNG	GILLI
H-3	0.00E+00	1.58E-07	1.58E-07	1.58E-07	1.58E-07	1.58E-07	1.58E-07
Be-7	0.00E+00	0.00E+00	0.00E+00	0.00E+00	0.00E+00	0.00E+00	0.00E+00
Na-24	1.28E-06	1.28E-06	1.28E-06	1.28E-06	1.28E-06	1.28E-06	1.28E-06
P-32	1.65E-04	9.64E-06	6.26E-06	0.00E+00	0.00E+00	0.00E+00	1.08E-05
Cr-51	0.00E+00	0.00E+00	1.25E-08	7.44E-09	2.85E-09	1.80E-06	4.15E-07
Mn-54	0.00E+00	4.95E-06	7.87E-07	0.00E+00	1.23E-06	1.75E-04	9.67E-06
Mn-56	0.00E+00	1.55E-10	2.29E-11	0.00E+00	1.63E-10	1.18E-06	2.53E-06
Fe-55	3.07E-06	2.12E-06	4.93E-07	0.00E+00	0.00E+00	9.01E-06	7.54E-07
Fe-59	1.47E-06	3.47E-06	1.32E-06	0.00E+00	0.00E+00	1.27E-04	2.35E-05
Co-58	0.00E+00	1.98E-07	2.59E-07	0.00E+00	0.00E+00	1.16E-04	1.33E-05
Co-60	0.00E+00	1.44E-06	1.85E-06	0.00E+00	0.00E+00	7.46E-04	3.56E-05
Ni-63	5.40E-05	3.93E-06	1.81E-06	0.00E+00	0.00E+00	2.23E-05	1.67E-06
Ni-65	1.92E-10	2.62E-11	1.14E-11	0.00E+00	0.00E+00	7.00E-07	1.54E-06
Cu-64	0.00E+00	1.83E-10	7.69E-11	0.00E+00	5.78E-10	8.48E-07	6.12E-06
Zn-65	4.05E-06	1.29E-05	5.82E-06	0.00E+00	8.62E-06	1.08E-04	6.68E-06
Zn-69	4.23E-12	8.14E-12	5.65E-13	0.00E+00	5.27E-12	1.15E-07	2.04E-09
Br-83	0.00E+00	0.00E+00	3.01E-08	0.00E+00	0.00E+00	0.00E+00	2.90E-08
Br-84	0.00E+00	0.00E+00	3.91E-08	0.00E+00	0.00E+00	0.00E+00	2.05E-13
Br-85	0.00E+00	0.00E+00	1.60E-09	0.00E+00	0.00E+00	0.00E+00	0.00E+00
Rb-86	0.00E+00	1.69E-05	7.37E-06	0.00E+00	0.00E+00	0.00E+00	2.08E-06
Rb-88	0.00E+00	4.84E-08	2.41E-08	0.00E+00	0.00E+00	0.00E+00	4.18E-19
Rb-89	0.00E+00	3.20E-08	2.12E-08	0.00E+00	0.00E+00	0.00E+00	1.16E-21
Sr-89	3.80E-05	0.00E+00	1.09E-06	0.00E+00	0.00E+00	1.75E-04	4.37E-05
Sr-90	1.24E-02	0.00E+00	7.62E-04	0.00E+00	0.00E+00	1.20E-03	9.02E-05
Sr-91	7.74E-09	0.00E+00	3.13E-10	0.00E+00	0.00E+00	4.56E-06	2.39E-05
Sr-92	8.43E-10	0.00E+00	3.64E-11	0.00E+00	0.00E+00	2.06E-06	5.38E-06
Y-90	2.61E-07	0.00E+00	7.01E-09	0.00E+00	0.00E+00	2.12E-05	6.32E-05
Y-91m	3.26E-11	0.00E+00	1.27E-12	0.00E+00	0.00E+00	2.40E-07	1.66E-10
Y-91	5.78E-05	0.00E+00	1.55E-06	0.00E+00	0.00E+00	2.13E-04	4.81E-05
Y-92	1.29E-09	0.00E+00	3.77E-11	0.00E+00	0.00E+00	1.96E-06	9.19E-06
Y-93	1.18E-08	0.00E+00	3.26E-10	0.00E+00	0.00E+00	6.06E-06	5.27E-05
Zr-95	1.34E-05	4.30E-06	2.91E-06	0.00E+00	6.77E-06	2.21E-04	1.88E-05
Zr-97	1.21E-08	2.45E-09	1.13E-09	0.00E+00	3.71E-09	9.84E-06	6.54E-05
Nb-95	1.76E-06	9.77E-07	5.26E-07	0.00E+00	9.67E-07	6.31E-05	1.30E-05
Mo-99	0.00E+00	1.51E-08	2.87E-09	0.00E+00	3.64E-08	1.14E-05	3.10E-05
Tc-99m	1.29E-13	3.64E-13	4.63E-12	0.00E+00	5.52E-12	9.55E-08	5.20E-07
Tc-101	5.22E-15	7.52E-15	7.38E-14	0.00E+00	1.35E-13	4.99E-08	1.36E-21
Ru-103	1.91E-07	0.00E+00	8.23E-08	0.00E+00	7.29E-07	6.31E-05	1.38E-05
Ru-105	9.88E-11	0.00E+00	3.89E-11	0.00E+00	1.27E-10	1.37E-06	6.02E-06
Ru-106	8.64E-06	0.00E+00	1.09E-06	0.00E+00	1.67E-05	1.17E-03	1.14E-04
Ag-110m	1.35E-06	1.25E-06	7.43E-07	0.00E+00	2.46E-06	5.79E-04	3.78E-05
Sb-122	0.00E+00	0.00E+00	0.00E+00	0.00E+00	0.00E+00	0.00E+00	0.00E+00
Sb-124	3.90E-06	7.36E-08	1.55E-06	9.44E-09	0.00E+00	3.10E-04	5.08E-05
Sb-125	6.67E-06	7.44E-08	1.58E-06	6.75E-09	0.00E+00	2.18E-04	1.26E-05

Table 3-1a

ADULT INHALATION DOSE FACTORS

(mrem per pCi inhaled)

Isotope	BONE	LIVER	TOT BODY	THYROID	KIDNEY	LUNG	GILLI
Te-125m	4.27E-07	1.98E-07	5.84E-08	1.31E-07	1.55E-06	3.92E-05	8.83E-06
Te-127m	1.58E-06	7.21E-07	1.96E-07	4.11E-07	5.72E-06	1.20E-04	1.87E-05
Te-127	1.75E-10	8.03E-11	3.87E-11	1.32E-10	6.37E-10	8.14E-07	7.17E-06
Te-129m	1.22E-06	5.84E-07	1.98E-07	4.30E-07	4.57E-06	1.45E-04	4.79E-05
Te-129	6.22E-12	2.99E-12	1.55E-12	4.87E-12	2.34E-11	2.42E-07	1.96E-08
Te-131m	8.74E-09	5.45E-09	3.63E-09	6.88E-09	3.86E-08	1.82E-05	6.95E-05
Te-131	1.39E-12	7.44E-13	4.49E-13	1.17E-12	5.46E-12	1.74E-07	2.30E-09
Te-132	3.25E-08	2.69E-08	2.02E-08	2.37E-08	1.82E-07	3.60E-05	6.37E-05
I-130	5.72E-07	1.68E-06	6.60E-07	1.42E-04	2.61E-06	0.00E+00	9.61E-07
I-131	3.15E-06	4.47E-06	2.56E-06	1.49E-03	7.66E-06	0.00E+00	7.85E-07
I-132	1.45E-07	4.07E-07	1.45E-07	1.43E-05	6.48E-07	0.00E+00	5.08E-08
I-133	1.08E-06	1.85E-06	5.65E-07	2.69E-04	3.23E-06	0.00E+00	1.11E-06
I-134	8.05E-08	2.16E-07	7.69E-08	3.73E-06	3.44E-07	0.00E+00	1.26E-10
I-135	3.35E-07	8.73E-07	3.21E-07	5.60E-05	1.39E-06	0.00E+00	6.56E-07
Cs-134	4.66E-05	1.06E-04	9.10E-05	0.00E+00	3.59E-05	1.22E-05	1.30E-06
Cs-136	4.88E-06	1.83E-05	1.38E-05	0.00E+00	1.07E-05	1.50E-06	1.46E-06
Cs-137	5.98E-05	7.76E-05	5.35E-05	0.00E+00	2.78E-05	9.40E-06	1.05E-06
Cs-138	4.14E-08	7.76E-08	4.05E-08	0.00E+00	6.00E-08	6.07E-09	2.33E-13
Ba-139	1.17E-10	8.32E-14	3.42E-12	0.00E+00	7.78E-14	4.70E-07	1.12E-07
Ba-140	4.88E-06	6.13E-09	3.21E-07	0.00E+00	2.09E-09	1.59E-04	2.73E-05
Ba-141	1.25E-11	9.41E-15	4.20E-13	0.00E+00	8.75E-15	2.42E-07	1.45E-17
Ba-142	3.29E-12	3.38E-15	2.07E-13	0.00E+00	2.86E-15	1.49E-07	1.96E-26
La-140	4.30E-08	2.17E-08	5.73E-09	0.00E+00	0.00E+00	1.70E-05	5.73E-05
La-142	8.54E-11	3.88E-11	9.65E-12	0.00E+00	0.00E+00	7.91E-07	2.64E-07
Ce-141	2.49E-06	1.69E-06	1.91E-07	0.00E+00	7.83E-07	4.52E-05	1.50E-05
Ce-143	2.33E-08	1.72E-08	1.91E-09	0.00E+00	7.60E-09	9.97E-06	2.83E-05
Ce-144	4.29E-04	1.79E-04	2.30E-05	0.00E+00	1.06E-04	9.72E-04	1.02E-04
Pr-143	1.17E-06	4.69E-07	5.80E-08	0.00E+00	2.70E-07	3.51E-05	2.50E-05
Pr-144	3.76E-12	1.56E-12	1.91E-13	0.00E+00	8.81E-13	1.27E-07	2.69E-18
Nd-147	6.59E-07	7.62E-07	4.56E-08	0.00E+00	4.45E-07	2.76E-05	2.16E-05
W-187	1.06E-09	8.85E-10	3.10E-10	0.00E+00	0.00E+00	3.63E-06	1.94E-05
Np-239	2.87E-08	2.82E-09	1.55E-09	0.00E+00	8.75E-09	4.70E-06	1.49E-05
K-40	0.00E+00	0.00E+00	0.00E+00	0.00E+00	0.00E+00	0.00E+00	0.00E+00
Co-57	0.00E+00	8.65E-08	8.39E-08	0.00E+00	0.00E+00	4.62E-05	3.93E-06
Sr-85	4.00E-06	0.00E+00	9.70E-05	0.00E+00	0.00E+00	6.00E-05	7.60E-06
Y-88	0.00E+00	0.00E+00	0.00E+00	0.00E+00	0.00E+00	0.00E+00	0.00E+00
Nb-94	0.00E+00	0.00E+00	0.00E+00	0.00E+00	0.00E+00	0.00E+00	0.00E+00
Nb-97	2.78E-11	7.03E-12	2.56E-12	0.00E+00	8.18E-12	3.00E-07	3.02E-08
Cd-109	0.00E+00	4.90E-05	1.60E-06	0.00E+00	4.70E-05	9.10E-05	8.20E-06
Sn-113	8.20E-06	2.70E-07	5.60E-07	1.70E-07	0.00E+00	1.20E-04	1.50E-06
Ba-133	9.50E-06	4.20E-07	2.50E-06	0.00E+00	2.10E-09	1.90E-04	1.00E-05
Te-134	3.84E-12	3.22E-12	1.57E-12	3.44E-12	2.18E-11	4.34E-07	2.97E-11
Ce-139	0.00E+00	0.00E+00	0.00E+00	0.00E+00	0.00E+00	0.00E+00	0.00E+00
Hg-203	0.00E+00	0.00E+00	0.00E+00	0.00E+00	0.00E+00	0.00E+00	0.00E+00

Table 3-1b

TEEN INHALATION DOSE FACTORS

(mrem per pCi inhaled)

Isotope	BONE	LIVER	TOT BODY	THYROID	KIDNEY	LUNG	GILLI
H-3	0.00E+00	1.59E-07	1.59E-07	1.59E-07	1.59E-07	1.59E-07	1.59E-07
Be-7	0.00E+00	0.00E+00	0.00E+00	0.00E+00	0.00E+00	0.00E+00	0.00E+00
Na-24	1.72E-06	1.72E-06	1.72E-06	1.72E-06	1.72E-06	1.72E-06	1.72E-06
P-32	2.36E-04	1.37E-05	8.95E-06	0.00E+00	0.00E+00	0.00E+00	1.16E-05
Cr-51	0.00E+00	0.00E+00	1.69E-08	9.37E-09	3.84E-09	2.62E-06	3.75E-07
Mn-54	0.00E+00	6.39E-06	1.05E-06	0.00E+00	1.59E-06	2.48E-04	8.35E-06
Mn-56	0.00E+00	2.12E-10	3.15E-11	0.00E+00	2.24E-10	1.90E-06	7.18E-06
Fe-55	4.18E-06	2.98E-06	6.93E-07	0.00E+00	0.00E+00	1.55E-05	7.99E-07
Fe-59	1.99E-06	4.62E-06	1.79E-06	0.00E+00	0.00E+00	1.91E-04	2.23E-05
Co-58	0.00E+00	2.59E-07	3.47E-07	0.00E+00	0.00E+00	1.68E-04	1.19E-05
Co-60	0.00E+00	1.89E-06	2.48E-06	0.00E+00	0.00E+00	1.09E-03	3.24E-05
Ni-63	7.25E-05	5.43E-06	2.47E-06	0.00E+00	0.00E+00	3.84E-05	1.77E-06
Ni-65	2.73E-10	3.66E-11	1.59E-11	0.00E+00	0.00E+00	1.17E-06	4.59E-06
Cu-64	0.00E+00	2.54E-10	1.06E-10	0.00E+00	8.01E-10	1.39E-06	7.68E-06
Zn-65	4.82E-06	1.67E-05	7.80E-06	0.00E+00	1.08E-05	1.55E-04	5.83E-06
Zn-69	6.04E-12	1.15E-11	8.07E-13	0.00E+00	7.53E-12	1.98E-07	3.56E-08
Br-83	0.00E+00	0.00E+00	4.30E-08	0.00E+00	0.00E+00	0.00E+00	0.00E+00
Br-84	0.00E+00	0.00E+00	5.41E-08	0.00E+00	0.00E+00	0.00E+00	0.00E+00
Br-85	0.00E+00	0.00E+00	2.29E-09	0.00E+00	0.00E+00	0.00E+00	0.00E+00
Rb-86	0.00E+00	2.38E-05	1.05E-05	0.00E+00	0.00E+00	0.00E+00	2.21E-06
Rb-88	0.00E+00	6.82E-08	3.40E-08	0.00E+00	0.00E+00	0.00E+00	3.65E-15
Rb-89	0.00E+00	4.40E-08	2.91E-08	0.00E+00	0.00E+00	0.00E+00	4.22E-17
Sr-89	5.43E-05	0.00E+00	1.56E-06	0.00E+00	0.00E+00	3.02E-04	4.64E-05
Sr-90	1.35E-02	0.00E+00	8.35E-04	0.00E+00	0.00E+00	2.06E-03	9.56E-05
Sr-91	1.10E-08	0.00E+00	4.39E-10	0.00E+00	0.00E+00	7.59E-06	3.24E-05
Sr-92	1.19E-09	0.00E+00	5.08E-11	0.00E+00	0.00E+00	3.43E-06	1.49E-05
Y-90	3.73E-07	0.00E+00	1.00E-08	0.00E+00	0.00E+00	3.66E-05	6.99E-05
Y-91m	4.63E-11	0.00E+00	1.77E-12	0.00E+00	0.00E+00	4.00E-07	3.77E-09
Y-91	8.26E-05	0.00E+00	2.21E-06	0.00E+00	0.00E+00	3.67E-04	5.11E-05
Y-92	1.84E-09	0.00E+00	5.36E-11	0.00E+00	0.00E+00	3.35E-06	2.06E-05
Y-93	1.69E-08	0.00E+00	4.65E-10	0.00E+00	0.00E+00	1.04E-05	7.24E-05
Zr-95	1.82E-05	5.73E-06	3.94E-06	0.00E+00	8.42E-06	3.36E-04	1.86E-05
Zr-97	1.72E-08	3.40E-09	1.57E-09	0.00E+00	5.15E-09	1.62E-05	7.88E-05
Nb-95	2.32E-06	1.29E-06	7.08E-07	0.00E+00	1.25E-06	9.39E-05	1.21E-05
Mo-99	0.00E+00	2.11E-08	4.03E-09	0.00E+00	5.14E-08	1.92E-05	3.36E-05
Tc-99m	1.73E-13	4.83E-13	6.24E-12	0.00E+00	7.20E-12	1.44E-07	7.66E-07
Tc-101	7.40E-15	1.05E-14	1.03E-13	0.00E+00	1.90E-13	8.34E-08	1.09E-16
Ru-103	2.63E-07	0.00E+00	1.12E-07	0.00E+00	9.29E-07	9.79E-05	1.36E-05
Ru-105	1.40E-10	0.00E+00	5.42E-11	0.00E+00	1.76E-10	2.27E-06	1.13E-05
Ru-106	1.23E-05	0.00E+00	1.55E-06	0.00E+00	2.38E-05	2.01E-03	1.20E-04
Ag-110m	1.73E-06	1.64E-06	9.99E-07	0.00E+00	3.13E-06	8.44E-04	3.41E-05
Sb-122	0.00E+00	0.00E+00	0.00E+00	0.00E+00	0.00E+00	0.00E+00	0.00E+00
Sb-124	5.38E-06	9.92E-08	2.10E-06	1.22E-08	0.00E+00	4.81E-04	4.98E-05
Sb-125	9.23E-06	1.01E-07	2.15E-06	8.80E-09	0.00E+00	3.42E-04	1.24E-05

Table 3-1b

TEEN INHALATION DOSE FACTORS

(mrem per pCi inhaled)

Isotope	BONE	LIVER	TOT BODY	THYROID	KIDNEY	LUNG	GILLI
Te-125m	6.10E-07	2.80E-07	8.34E-08	1.75E-07	0.00E+00	6.70E-05	9.38E-06
Te-127m	2.25E-06	1.02E-06	2.73E-07	5.48E-07	8.17E-06	2.07E-04	1.99E-05
Te-127	2.51E-10	1.14E-10	5.52E-11	1.77E-10	9.10E-10	1.40E-06	1.01E-05
Te-129m	1.74E-06	8.23E-07	2.81E-07	5.72E-07	6.49E-06	2.47E-04	5.06E-05
Te-129	8.87E-12	4.22E-12	2.20E-12	6.48E-12	3.32E-11	4.12E-07	2.02E-07
Te-131m	1.23E-08	7.51E-09	5.03E-09	9.06E-09	5.49E-08	2.97E-05	7.76E-05
Te-131	1.97E-12	1.04E-12	6.30E-13	1.55E-12	7.72E-12	2.92E-07	1.89E-09
Te-132	4.50E-08	3.63E-08	2.74E-08	3.07E-08	2.44E-07	5.61E-05	5.79E-05
I-130	7.80E-07	2.24E-06	8.96E-07	1.86E-04	3.44E-06	0.00E+00	1.14E-06
I-131	4.43E-06	6.14E-06	3.30E-06	1.83E-03	1.05E-05	0.00E+00	8.11E-07
I-132	1.99E-07	5.47E-07	1.97E-07	1.89E-05	8.65E-07	0.00E+00	1.59E-07
I-133	1.52E-06	2.56E-06	7.78E-07	3.65E-04	4.49E-06	0.00E+00	1.29E-06
I-134	1.11E-07	2.90E-07	1.05E-07	4.94E-06	4.58E-07	0.00E+00	2.55E-09
I-135	4.62E-07	1.18E-06	4.36E-07	7.76E-05	1.86E-06	0.00E+00	8.69E-07
Cs-134	6.28E-05	1.41E-04	6.86E-05	0.00E+00	4.69E-05	1.83E-05	1.22E-06
Cs-136	6.44E-06	2.42E-05	1.71E-05	0.00E+00	1.38E-05	2.22E-06	1.36E-06
Cs-137	8.38E-05	1.06E-04	3.89E-05	0.00E+00	3.80E-05	1.51E-05	1.06E-06
Cs-138	5.82E-08	1.07E-07	5.58E-08	0.00E+00	8.28E-08	9.84E-09	3.38E-11
Ba-139	1.67E-10	1.18E-13	4.87E-12	0.00E+00	1.11E-13	8.08E-07	8.06E-07
Ba-140	6.84E-06	8.38E-09	4.40E-07	0.00E+00	2.85E-09	2.54E-04	2.86E-05
Ba-141	1.78E-11	1.32E-14	5.93E-13	0.00E+00	1.23E-14	4.11E-07	9.33E-14
Ba-142	4.62E-12	4.63E-15	2.84E-13	0.00E+00	3.92E-15	2.39E-07	5.99E-20
La-140	5.99E-08	2.95E-08	7.82E-09	0.00E+00	0.00E+00	2.68E-05	6.09E-05
La-142	1.20E-10	5.31E-11	1.32E-11	0.00E+00	0.00E+00	1.27E-06	1.50E-06
Ce-141	3.55E-06	2.37E-06	2.71E-07	0.00E+00	1.11E-06	7.67E-05	1.58E-05
Ce-143	3.32E-08	2.42E-08	2.70E-09	0.00E+00	1.08E-08	1.63E-05	3.19E-05
Ce-144	6.11E-04	2.53E-04	3.28E-05	0.00E+00	1.51E-04	1.67E-03	1.08E-04
Pr-143	1.67E-06	6.64E-07	8.28E-08	0.00E+00	3.86E-07	6.04E-05	2.67E-05
Pr-144	5.37E-12	2.20E-12	2.72E-13	0.00E+00	1.26E-12	2.19E-07	2.94E-14
Nd-147	9.83E-07	1.07E-06	6.41E-08	0.00E+00	6.28E-07	4.65E-05	2.28E-05
W-187	1.50E-09	1.22E-09	4.29E-10	0.00E+00	0.00E+00	5.92E-06	2.21E-05
Np-239	4.23E-08	3.99E-09	2.21E-09	0.00E+00	1.25E-08	8.11E-06	1.65E-05
K-40	0.00E+00	0.00E+00	0.00E+00	0.00E+00	0.00E+00	0.00E+00	0.00E+00
Co-57	0.00E+00	1.18E-07	1.15E-07	0.00E+00	0.00E+00	7.33E-05	3.93E-06
Sr-85	5.00E-06	0.00E+00	1.30E-06	0.00E+00	0.00E+00	8.80E-05	6.90E-06
Y-88	0.00E+00	0.00E+00	0.00E+00	0.00E+00	0.00E+00	0.00E+00	0.00E+00
Nb-94	0.00E+00	0.00E+00	0.00E+00	0.00E+00	0.00E+00	0.00E+00	0.00E+00
Nb-97	3.93E-11	9.72E-12	3.55E-12	0.00E+00	1.14E-11	4.91E-07	2.71E-07
Cd-109	0.00E+00	1.00E-04	3.40E-06	0.00E+00	6.70E-05	1.60E-04	8.60E-06
Sn-113	1.50E-05	4.70E-07	9.70E-07	2.90E-07	0.00E+00	2.00E-04	1.50E-06
Ba-133	4.70E-05	8.00E-07	3.30E-06	0.00E+00	2.80E-09	2.90E-04	9.70E-06
Te-134	5.31E-12	4.35E-12	3.64E-12	4.46E-12	2.91E-11	6.75E-07	1.37E-09
Ce-139	0.00E+00	0.00E+00	0.00E+00	0.00E+00	0.00E+00	0.00E+00	0.00E+00
Hg-203	0.00E+00	0.00E+00	0.00E+00	0.00E+00	0.00E+00	0.00E+00	0.00E+00

Table 3-1c

CHILD INHALATION DOSE FACTORS

(mrem per pCi inhaled)

Isotope	BONE	LIVER	TOT BODY	THYROID	KIDNEY	LUNG	GILLI
H-3	0.00E+00	3.04E-07	3.04E-07	3.04E-07	3.04E-07	3.04E-07	3.04E-07
Be-7	0.00E+00	0.00E+00	0.00E+00	0.00E+00	0.00E+00	0.00E+00	0.00E+00
Na-24	4.35E-06	4.35E-06	4.35E-06	4.35E-06	4.35E-06	4.35E-06	4.35E-06
P-32	7.04E-04	3.09E-05	2.67E-05	0.00E+00	0.00E+00	0.00E+00	1.14E-05
Cr-51	0.00E+00	0.00E+00	4.17E-08	2.31E-08	6.57E-09	4.59E-06	2.93E-07
Mn-54	0.00E+00	1.16E-05	2.57E-06	0.00E+00	2.71E-06	4.26E-04	6.19E-06
Mn-56	0.00E+00	4.48E-10	8.43E-11	0.00E+00	4.52E-10	3.55E-06	3.33E-05
Fe-55	1.28E-05	6.80E-06	2.10E-06	0.00E+00	0.00E+00	3.00E-05	7.75E-07
Fe-59	5.59E-06	9.04E-06	4.51E-06	0.00E+00	0.00E+00	3.43E-04	1.91E-05
Co-58	0.00E+00	4.79E-07	8.55E-07	0.00E+00	0.00E+00	2.99E-04	9.29E-06
Co-60	0.00E+00	3.55E-06	6.12E-06	0.00E+00	0.00E+00	1.91E-03	2.60E-05
Ni-63	2.22E-04	1.25E-05	7.56E-06	0.00E+00	0.00E+00	7.43E-05	1.71E-06
Ni-65	8.08E-10	7.99E-11	4.44E-11	0.00E+00	0.00E+00	2.21E-06	2.27E-05
Cu-64	0.00E+00	5.39E-10	2.90E-10	0.00E+00	1.63E-09	2.59E-06	9.92E-06
Zn-65	1.15E-05	3.06E-05	1.90E-05	0.00E+00	1.93E-05	2.69E-04	4.41E-06
Zn-69	1.81E-11	2.61E-11	2.41E-12	0.00E+00	1.58E-11	3.84E-07	2.75E-06
Br-83	0.00E+00	0.00E+00	1.28E-07	0.00E+00	0.00E+00	0.00E+00	0.00E+00
Br-84	0.00E+00	0.00E+00	1.48E-07	0.00E+00	0.00E+00	0.00E+00	0.00E+00
Br-85	0.00E+00	0.00E+00	6.84E-09	0.00E+00	0.00E+00	0.00E+00	0.00E+00
Rb-86	0.00E+00	5.36E-05	3.09E-05	0.00E+00	0.00E+00	0.00E+00	2.16E-06
Rb-88	0.00E+00	1.52E-07	9.90E-08	0.00E+00	0.00E+00	0.00E+00	4.66E-09
Rb-89	0.00E+00	9.33E-08	7.83E-08	0.00E+00	0.00E+00	0.00E+00	5.11E-10
Sr-89	1.62E-04	0.00E+00	4.66E-06	0.00E+00	0.00E+00	5.83E-04	4.52E-05
Sr-90	2.73E-02	0.00E+00	1.74E-03	0.00E+00	0.00E+00	3.99E-03	9.28E-05
Sr-91	3.28E-08	0.00E+00	1.24E-09	0.00E+00	0.00E+00	1.44E-05	4.70E-05
Sr-92	3.54E-09	0.00E+00	1.42E-10	0.00E+00	0.00E+00	6.49E-06	6.55E-05
Y-90	1.11E-06	0.00E+00	2.99E-08	0.00E+00	0.00E+00	7.07E-05	7.24E-05
Y-91m	1.37E-10	0.00E+00	4.98E-12	0.00E+00	0.00E+00	7.60E-07	4.64E-07
Y-91	2.47E-04	0.00E+00	6.59E-06	0.00E+00	0.00E+00	7.10E-04	4.97E-05
Y-92	5.50E-09	0.00E+00	1.57E-10	0.00E+00	0.00E+00	6.46E-06	6.46E-05
Y-93	5.04E-08	0.00E+00	1.38E-09	0.00E+00	0.00E+00	2.01E-05	1.05E-04
Zr-95	5.13E-05	1.13E-05	1.00E-05	0.00E+00	1.61E-05	6.03E-04	1.65E-05
Zr-97	5.07E-08	7.34E-09	4.32E-09	0.00E+00	1.05E-08	3.06E-05	9.49E-05
Nb-95	6.35E-06	2.48E-06	1.77E-06	0.00E+00	2.33E-06	1.66E-04	1.00E-05
Mo-99	0.00E+00	4.66E-08	1.15E-08	0.00E+00	1.06E-07	3.66E-05	3.42E-05
Tc-99m	4.81E-13	9.41E-13	1.56E-11	0.00E+00	1.37E-11	2.57E-07	1.30E-06
Tc-101	2.19E-14	2.30E-14	2.91E-13	0.00E+00	3.92E-13	1.58E-07	4.41E-09
Ru-103	7.55E-07	0.00E+00	2.90E-07	0.00E+00	1.90E-06	1.79E-04	1.21E-05
Ru-105	4.13E-10	0.00E+00	1.50E-10	0.00E+00	3.63E-10	4.30E-06	2.69E-05
Ru-106	3.68E-05	0.00E+00	4.57E-06	0.00E+00	4.97E-05	3.87E-03	1.16E-04
Ag-110m	4.56E-06	3.08E-06	2.47E-06	0.00E+00	5.74E-06	1.48E-03	2.71E-05
Sb-122	0.00E+00	0.00E+00	0.00E+00	0.00E+00	0.00E+00	0.00E+00	0.00E+00
Sb-124	1.55E-05	2.00E-07	5.41E-06	3.41E-08	0.00E+00	8.76E-04	4.43E-05
Sb-125	2.66E-05	2.05E-07	5.59E-06	2.46E-08	0.00E+00	6.27E-04	1.09E-05

Table 3-1c

CHILD INHALATION DOSE FACTORS

(mrem per pCi inhaled)

Isotope	BONE	LIVER	TOT BODY	THYROID	KIDNEY	LUNG	GILLI
Te-125m	1.82E-06	6.29E-07	2.47E-07	5.20E-07	0.00E+00	1.29E-04	9.13E-06
Te-127m	6.72E-06	2.31E-06	8.16E-07	1.64E-06	1.72E-05	4.00E-04	1.93E-05
Te-127	7.49E-10	2.57E-10	1.65E-10	5.30E-10	1.91E-09	2.71E-06	1.52E-05
Te-129m	5.19E-06	1.85E-06	8.22E-07	1.71E-06	1.36E-05	4.76E-04	4.91E-05
Te-129	2.64E-11	9.45E-12	6.44E-12	1.93E-11	6.94E-11	7.93E-07	6.89E-06
Te-131m	3.63E-08	1.60E-08	1.37E-08	2.64E-08	1.08E-07	5.56E-05	8.32E-05
Te-131	5.87E-12	2.28E-12	1.78E-12	4.59E-12	1.59E-11	5.55E-07	3.60E-07
Te-132	1.30E-07	7.36E-08	7.12E-08	8.58E-08	4.79E-07	1.02E-04	3.72E-05
I-130	2.21E-06	4.43E-06	2.28E-06	4.99E-04	6.61E-06	0.00E+00	1.38E-06
I-131	1.30E-05	1.30E-05	7.37E-06	4.39E-03	2.13E-05	0.00E+00	7.68E-07
I-132	5.72E-07	1.10E-06	5.07E-07	5.23E-05	1.69E-06	0.00E+00	8.65E-07
I-133	4.48E-06	5.49E-06	2.08E-06	1.04E-03	9.13E-06	0.00E+00	1.48E-06
I-134	3.17E-07	5.84E-07	2.69E-07	1.37E-05	8.92E-07	0.00E+00	2.58E-07
I-135	1.33E-06	2.36E-06	1.12E-06	2.14E-04	3.62E-06	0.00E+00	1.20E-06
Cs-134	1.76E-04	2.74E-04	6.07E-05	0.00E+00	8.93E-05	3.27E-05	1.04E-06
Cs-136	1.76E-05	4.62E-05	3.14E-05	0.00E+00	2.58E-05	3.93E-06	1.13E-06
Cs-137	2.45E-04	2.23E-04	3.47E-05	0.00E+00	7.63E-05	2.81E-05	9.78E-07
Cs-138	1.71E-07	2.27E-07	1.50E-07	0.00E+00	1.68E-07	1.84E-08	7.29E-08
Ba-139	4.98E-10	2.66E-13	1.45E-11	0.00E+00	2.33E-13	1.56E-06	1.56E-05
Ba-140	2.00E-05	1.75E-08	1.17E-06	0.00E+00	5.71E-09	4.71E-04	2.75E-05
Ba-141	5.29E-11	2.95E-14	1.72E-12	0.00E+00	2.56E-14	7.89E-07	7.44E-08
Ba-142	1.35E-11	9.73E-15	7.54E-13	0.00E+00	7.87E-15	4.44E-07	7.41E-10
La-140	1.74E-07	6.08E-08	2.04E-08	0.00E+00	0.00E+00	4.94E-05	6.10E-05
La-142	3.50E-10	1.11E-10	3.49E-11	0.00E+00	0.00E+00	2.35E-06	2.05E-05
Ce-141	1.06E-05	5.28E-06	7.83E-07	0.00E+00	2.31E-06	1.47E-04	1.53E-05
Ce-143	9.89E-08	5.37E-08	7.77E-09	0.00E+00	2.26E-08	3.12E-05	3.44E-05
Ce-144	1.83E-03	5.72E-04	9.77E-05	0.00E+00	3.17E-04	3.23E-03	1.05E-04
Pr-143	4.99E-06	1.50E-06	2.47E-07	0.00E+00	8.11E-07	1.17E-04	2.63E-05
Pr-144	1.61E-11	4.99E-12	8.10E-13	0.00E+00	2.64E-12	4.23E-07	5.32E-08
Nd-147	2.92E-06	2.36E-06	1.84E-07	0.00E+00	1.30E-06	8.87E-05	2.22E-05
W-187	4.41E-09	2.61E-09	1.17E-09	0.00E+00	0.00E+00	1.11E-05	2.46E-05
Np-239	1.26E-07	9.04E-09	6.35E-09	0.00E+00	2.63E-08	1.57E-05	1.73E-05
K-40	0.00E+00	0.00E+00	0.00E+00	0.00E+00	0.00E+00	0.00E+00	0.00E+00
Co-57	0.00E+00	2.44E-07	2.88E-07	0.00E+00	0.00E+00	1.37E-04	3.58E-06
Sr-85	1.20E-05	0.00E+00	3.20E-06	0.00E+00	0.00E+00	1.50E-04	5.50E-06
Y-88	0.00E+00	0.00E+00	0.00E+00	0.00E+00	0.00E+00	0.00E+00	0.00E+00
Nb-94	0.00E+00	0.00E+00	0.00E+00	0.00E+00	0.00E+00	0.00E+00	0.00E+00
Nb-97	1.16E-10	2.08E-11	9.73E-12	0.00E+00	2.31E-11	9.24E-07	7.51E-06
Cd-109	0.00E+00	1.90E-04	8.00E-06	0.00E+00	1.70E-04	3.00E-04	8.10E-06
Sn-113	3.80E-05	8.90E-07	2.30E-06	7.10E-07	0.00E+00	3.60E-04	1.30E-06
Ba-133	1.10E-04	1.10E-06	1.00E-05	0.00E+00	5.40E-09	5.20E-04	8.30E-06
Te-134	1.53E-11	8.81E-12	9.40E-12	1.24E-11	5.71E-11	1.23E-06	4.87E-07
Ce-139	0.00E+00	0.00E+00	0.00E+00	0.00E+00	0.00E+00	0.00E+00	0.00E+00
Hg-203	0.00E+00	0.00E+00	0.00E+00	0.00E+00	0.00E+00	0.00E+00	0.00E+00

Table 3-1d

INFANT INHALATION DOSE FACTORS

(mrem per pCi inhaled)

Isotope	BONE	LIVER	TOT BODY	THYROID	KIDNEY	LUNG	GILLI
H-3	0.00E+00	4.62E-07	4.62E-07	4.62E-07	4.62E-07	4.62E-07	4.62E-07
Be-7	0.00E+00	0.00E+00	0.00E+00	0.00E+00	0.00E+00	0.00E+00	0.00E+00
Na-24	7.54E-06	7.54E-06	7.54E-06	7.54E-06	7.54E-06	7.54E-06	7.54E-06
P-32	1.45E-03	8.03E-05	5.53E-05	0.00E+00	0.00E+00	0.00E+00	1.15E-05
Cr-51	0.00E+00	0.00E+00	6.39E-08	4.11E-08	9.45E-09	9.17E-06	2.55E-07
Mn-54	0.00E+00	1.81E-05	3.56E-06	0.00E+00	3.56E-06	7.14E-04	5.04E-06
Mn-56	0.00E+00	1.10E-09	1.58E-10	0.00E+00	7.86E-10	8.95E-06	5.12E-05
Fe-55	1.41E-05	8.39E-06	2.38E-06	0.00E+00	0.00E+00	6.21E-05	7.82E-07
Fe-59	9.69E-06	1.68E-05	6.77E-06	0.00E+00	0.00E+00	7.25E-04	1.77E-05
Co-58	0.00E+00	8.71E-07	1.30E-06	0.00E+00	0.00E+00	5.55E-04	7.95E-06
Co-60	0.00E+00	5.73E-06	8.41E-06	0.00E+00	0.00E+00	3.22E-03	2.28E-05
Ni-63	2.42E-04	1.46E-05	8.29E-06	0.00E+00	0.00E+00	1.49E-04	1.73E-06
Ni-65	1.71E-09	2.03E-10	8.79E-11	0.00E+00	0.00E+00	5.80E-06	3.58E-05
Cu-64	0.00E+00	1.34E-09	5.53E-10	0.00E+00	2.84E-09	6.64E-06	1.07E-05
Zn-65	1.38E-05	4.47E-05	2.22E-05	0.00E+00	2.32E-05	4.62E-04	3.67E-05
Zn-69	3.85E-11	6.91E-11	5.13E-12	0.00E+00	2.87E-11	1.05E-06	9.44E-06
Br-83	0.00E+00	0.00E+00	2.72E-07	0.00E+00	0.00E+00	0.00E+00	0.00E+00
Br-84	0.00E+00	0.00E+00	2.86E-07	0.00E+00	0.00E+00	0.00E+00	0.00E+00
Br-85	0.00E+00	0.00E+00	1.46E-08	0.00E+00	0.00E+00	0.00E+00	0.00E+00
Rb-86	0.00E+00	1.36E-04	6.30E-05	0.00E+00	0.00E+00	0.00E+00	2.17E-06
Rb-88	0.00E+00	3.98E-07	2.05E-07	0.00E+00	0.00E+00	0.00E+00	2.42E-07
Rb-89	0.00E+00	2.29E-07	1.47E-07	0.00E+00	0.00E+00	0.00E+00	4.87E-08
Sr-89	2.84E-04	0.00E+00	8.15E-06	0.00E+00	0.00E+00	1.45E-03	4.57E-05
Sr-90	2.92E-02	0.00E+00	1.85E-03	0.00E+00	0.00E+00	8.03E-03	9.36E-05
Sr-91	6.83E-08	0.00E+00	2.47E-09	0.00E+00	0.00E+00	3.76E-05	5.24E-05
Sr-92	7.50E-09	0.00E+00	2.79E-10	0.00E+00	0.00E+00	1.70E-05	1.00E-04
Y-90	2.35E-06	0.00E+00	6.30E-08	0.00E+00	0.00E+00	1.92E-04	7.43E-05
Y-91m	2.91E-10	0.00E+00	9.90E-12	0.00E+00	0.00E+00	1.99E-06	1.68E-06
Y-91	4.20E-04	0.00E+00	1.12E-05	0.00E+00	0.00E+00	1.75E-03	5.02E-05
Y-92	1.17E-08	0.00E+00	3.29E-10	0.00E+00	0.00E+00	1.75E-05	9.04E-05
Y-93	1.07E-07	0.00E+00	2.91E-09	0.00E+00	0.00E+00	5.46E-05	1.19E-04
Zr-95	8.24E-05	1.99E-05	1.45E-05	0.00E+00	2.22E-05	1.25E-03	1.55E-05
Zr-97	1.07E-07	1.83E-08	8.36E-09	0.00E+00	1.85E-08	7.88E-05	1.00E-04
Nb-95	1.12E-05	4.59E-06	2.70E-06	0.00E+00	3.37E-06	3.42E-04	9.05E-06
Mo-99	0.00E+00	1.18E-07	2.31E-08	0.00E+00	1.89E-07	9.63E-05	3.48E-05
Tc-99m	9.98E-13	2.06E-12	2.66E-11	0.00E+00	2.22E-11	5.79E-07	1.45E-06
Tc-101	4.65E-14	5.88E-14	5.80E-13	0.00E+00	6.99E-13	4.17E-07	6.03E-07
Ru-103	1.44E-06	0.00E+00	4.85E-07	0.00E+00	3.03E-06	3.94E-04	1.15E-05
Ru-105	8.74E-10	0.00E+00	2.93E-10	0.00E+00	6.42E-10	1.12E-05	3.46E-05
Ru-106	6.20E-05	0.00E+00	7.77E-06	0.00E+00	7.61E-05	8.26E-03	1.17E-04
Ag-110m	7.13E-06	5.16E-06	3.57E-06	0.00E+00	7.80E-06	2.62E-03	2.36E-05
Sb-122	0.00E+00	0.00E+00	0.00E+00	0.00E+00	0.00E+00	0.00E+00	0.00E+00
Sb-124	2.71E-05	3.97E-07	8.56E-06	7.18E-08	0.00E+00	1.89E-03	4.22E-05
Sb-125	3.69E-05	3.41E-07	7.78E-06	4.45E-08	0.00E+00	1.17E-03	1.05E-05

Table 3-1d

INFANT INHALATION DOSE FACTORS

(mrem per pCi inhaled)

Isotope	BONE	LIVER	TOT BODY	THYROID	KIDNEY	LUNG	GILLI
Te-125m	3.40E-06	1.42E-06	4.70E-07	1.16E-06	0.00E+00	3.19E-04	9.22E-06
Te-127m	1.19E-05	4.93E-06	1.48E-06	3.48E-06	2.68E-05	9.37E-04	1.95E-05
Te-127	1.59E-05	6.81E-10	3.49E-10	1.32E-09	3.47E-09	7.39E-06	1.74E-05
Te-129m	1.01E-05	4.35E-06	1.59E-06	3.91E-06	2.27E-05	1.20E-03	4.93E-05
Te-129	5.63E-11	2.48E-11	1.34E-11	4.82E-11	1.25E-10	2.14E-06	1.88E-05
Te-131m	7.62E-08	3.93E-08	2.59E-08	6.38E-08	1.89E-07	1.42E-04	8.51E-05
Te-131	1.24E-11	5.87E-12	3.57E-12	1.13E-11	2.85E-11	1.47E-06	5.87E-06
Te-132	2.66E-07	1.69E-07	1.26E-07	1.99E-07	7.39E-07	2.43E-04	3.15E-05
I-130	4.54E-06	9.01E-06	3.98E-06	1.14E-03	1.09E-05	0.00E+00	1.42E-06
I-131	2.71E-05	3.17E-05	1.40E-05	1.06E-02	3.70E-05	0.00E+00	7.56E-07
I-132	1.21E-06	2.53E-06	8.99E-07	1.21E-04	2.82E-06	0.00E+00	1.36E-06
I-133	9.46E-06	1.37E-05	4.00E-06	2.54E-03	1.60E-05	0.00E+00	1.54E-06
I-134	6.58E-07	1.34E-06	4.75E-07	3.18E-05	1.49E-06	0.00E+00	9.21E-07
I-135	2.76E-06	5.43E-06	1.98E-06	4.97E-04	6.05E-06	0.00E+00	1.31E-06
Cs-134	2.83E-04	5.02E-04	5.32E-05	0.00E+00	1.36E-04	5.69E-05	9.53E-07
Cs-136	3.45E-05	9.61E-05	3.78E-05	0.00E+00	4.03E-05	8.40E-06	1.02E-06
Cs-137	3.92E-04	4.37E-04	3.25E-05	0.00E+00	1.23E-04	5.09E-05	9.53E-07
Cs-138	3.61E-07	5.58E-07	2.84E-07	0.00E+00	2.93E-07	4.67E-08	6.26E-07
Ba-139	1.06E-09	7.03E-13	3.07E-11	0.00E+00	4.23E-13	4.25E-06	3.64E-05
Ba-140	4.00E-05	4.00E-08	2.07E-06	0.00E+00	9.59E-09	1.14E-03	2.74E-05
Ba-141	1.12E-10	7.70E-14	3.55E-12	0.00E+00	4.64E-14	2.12E-06	3.39E-06
Ba-142	2.84E-11	2.36E-14	1.40E-12	0.00E+00	1.36E-14	1.11E-06	4.95E-07
La-140	3.61E-07	1.43E-07	3.68E-08	0.00E+00	0.00E+00	1.20E-04	6.06E-05
La-142	7.36E-10	2.69E-10	6.46E-11	0.00E+00	0.00E+00	5.87E-06	4.25E-05
Ce-141	1.98E-05	1.19E-05	1.42E-06	0.00E+00	3.75E-06	3.69E-04	1.54E-05
Ce-143	2.09E-07	1.38E-07	1.58E-08	0.00E+00	4.03E-08	8.30E-05	3.55E-05
Ce-144	2.28E-03	8.65E-04	1.26E-04	0.00E+00	3.84E-04	7.03E-03	1.06E-04
Pr-143	1.00E-05	3.74E-06	4.99E-07	0.00E+00	1.41E-06	3.09E-04	2.66E-05
Pr-144	3.42E-11	1.32E-11	1.72E-12	0.00E+00	4.80E-12	1.15E-06	3.06E-06
Nd-147	5.67E-06	5.81E-06	3.57E-07	0.00E+00	2.25E-06	2.30E-04	2.23E-05
W-187	9.26E-09	6.44E-09	2.23E-09	0.00E+00	0.00E+00	2.83E-05	2.54E-05
Np-239	2.65E-07	2.37E-08	1.34E-08	0.00E+00	4.73E-08	4.25E-05	1.78E-05
K-40	0.00E+00	0.00E+00	0.00E+00	0.00E+00	0.00E+00	0.00E+00	0.00E+00
Co-57	0.00E+00	4.65E-07	4.58E-07	0.00E+00	0.00E+00	2.71E-04	3.47E-06
Sr-85	2.70E-05	0.00E+00	5.40E-06	0.00E+00	0.00E+00	3.00E-04	4.80E-06
Y-88	0.00E+00	0.00E+00	0.00E+00	0.00E+00	0.00E+00	0.00E+00	0.00E+00
Nb-94	0.00E+00	0.00E+00	0.00E+00	0.00E+00	0.00E+00	0.00E+00	0.00E+00
Nb-97	2.44E-10	5.21E-11	1.88E-11	0.00E+00	4.07E-11	2.37E-06	1.92E-05
Cd-109	0.00E+00	2.60E-04	1.00E-05	0.00E+00	2.00E-04	6.20E-04	8.00E-06
Sn-113	6.00E-05	1.60E-06	3.60E-06	1.30E-06	0.00E+00	7.80E-04	1.20E-06
Ba-133	1.90E-04	1.70E-06	1.30E-05	0.00E+00	8.90E-09	9.10E-04	7.70E-06
Te-134	3.18E-11	2.04E-11	1.68E-11	2.91E-11	9.59E-11	2.93E-06	2.53E-06
Ce-139	0.00E+00	0.00E+00	0.00E+00	0.00E+00	0.00E+00	0.00E+00	0.00E+00
Hg-203	0.00E+00	0.00E+00	0.00E+00	0.00E+00	0.00E+00	0.00E+00	0.00E+00

Table 3-2

Total Body & Skin Ground Plane Dose Factors (mrem/hr per pCi/m^2)
with Isotope half-life and Stable Element Transfer Data (Fm, cow)

				Ground Plane Dose Factors	
Isotope	Halflife	unit	Fm	TotBody(DFg)	Skin(DFs)
H-3	12.350	Y	1.00E-02	0.00E+00	0.00E+00
Be-7	53.300	D	1.00E-04	0.00E+00	0.00E+00
Na-24	15.000	H	4.00E-02	2.50E-08	2.90E-08
P-32	14.290	D	2.50E-02	0.00E+00	0.00E+00
Cr-51	27.704	D	2.20E-03	2.20E-10	2.60E-10
Mn-54	312.500	D	2.50E-04	5.80E-09	6.80E-09
Mn-56	2.578	H	2.50E-04	1.10E-08	1.30E-08
Fe-55	2.700	Y	1.20E-03	0.00E+00	0.00E+00
Fe-59	44.529	D	1.20E-03	8.00E-09	9.40E-09
Co-58	70.800	D	1.00E-03	7.00E-09	8.20E-09
Co-60	5.271	Y	1.00E-03	1.70E-08	2.00E-08
Ni-63	96.000	Y	6.70E-03	0.00E+00	0.00E+00
Ni-65	2.520	H	6.70E-03	3.70E-09	4.30E-09
Cu-64	12.701	H	1.40E-02	1.50E-09	1.70E-09
Zn-65	243.900	D	3.90E-02	4.00E-09	4.60E-09
Zn-69	0.950	H	3.90E-02	0.00E+00	0.00E+00
Br-83	2.390	H	5.00E-02	6.40E-11	9.30E-11
Br-84	0.530	H	5.00E-02	1.20E-08	1.40E-08
Br-85	0.050	H	5.00E-02	0.00E+00	0.00E+00
Rb-86	18.660	D	3.00E-02	6.30E-10	7.20E-10
Rb-88	0.297	H	3.00E-02	3.50E-09	4.00E-09
Rb-89	0.253	H	3.00E-02	1.50E-08	1.80E-08
Sr-89	50.500	D	8.00E-04	5.60E-13	6.50E-13
Sr-90	29.120	Y	8.00E-04	0.00E+00	0.00E+00
Sr-91	9.500	H	8.00E-04	7.10E-09	8.30E-09
Sr-92	2.710	H	8.00E-04	9.00E-09	1.00E-08
Y-90	2.667	D	1.00E-05	2.20E-12	2.60E-12
Y-91m	0.829	H	1.00E-05	3.80E-09	4.40E-09
Y-91	58.510	D	1.00E-05	2.40E-11	2.70E-11
Y-92	3.540	H	1.00E-05	1.60E-09	1.90E-09
Y-93	10.100	H	1.00E-05	5.70E-10	7.80E-10
Zr-95	63.980	D	5.00E-06	5.00E-09	5.80E-09
Zr-97	16.900	H	5.00E-06	5.50E-09	6.40E-09
Nb-95	35.150	D	2.50E-03	5.10E-09	6.00E-09
Mo-99	2.750	D	7.50E-03	1.90E-09	2.20E-09
Tc-99m	6.020	H	2.50E-02	9.60E-10	1.10E-09
Tc-101	0.237	H	2.50E-02	2.70E-09	3.00E-09
Ru-103	39.280	D	1.00E-06	3.60E-09	4.20E-09
Ru-105	4.440	H	1.00E-06	4.50E-09	5.10E-09
Ru-106	368.200	D	1.00E-06	1.50E-09	1.80E-09
Ag-110m	249.900	D	5.00E-02	1.80E-08	2.10E-08
Sb-122	2.700	D	1.50E-03	0.00E+00	0.00E+00
Sb-124	60.200	D	1.50E-03	1.30E-08	1.50E-08
Sb-125	2.770	Y	1.50E-03	3.10E-09	3.50E-09

Table 3-2

Total Body & Skin Ground Plane Dose Factors (mrem/hr per pCi/m^2)
with Isotope half-life and Stable Element Transfer Data (Fm, cow)

				Ground Plane Dose Factors	
Isotope	Halflife	unit	Fm	TotBody(DFg)	Skin(DFs)
Te-125m	58.000	D	1.00E-03	3.50E-11	4.80E-11
Te-127m	109.000	D	1.00E-03	1.10E-12	1.30E-12
Te-127	9.350	H	1.00E-03	1.00E-11	1.10E-11
Te-129m	33.600	D	1.00E-03	7.70E-10	9.00E-10
Te-129	1.160	H	1.00E-03	7.10E-10	8.40E-10
Te-131m	30.000	H	1.00E-03	8.40E-09	9.90E-09
Te-131	0.417	H	1.00E-03	2.20E-09	2.60E-06
Te-132	3.258	D	1.00E-03	1.70E-09	2.00E-09
I-130	12.360	H	6.00E-03	1.40E-08	1.70E-08
I-131	8.040	D	6.00E-03	2.80E-09	3.40E-09
I-132	2.300	H	6.00E-03	1.70E-08	2.00E-08
I-133	20.800	H	6.00E-03	3.70E-09	4.50E-09
I-134	0.877	H	6.00E-03	1.60E-08	1.90E-08
I-135	6.610	H	6.00E-03	1.20E-08	1.40E-08
Cs-134	2.062	Y	1.20E-02	1.20E-08	1.40E-08
Cs-136	13.100	D	1.20E-02	1.50E-08	1.70E-08
Cs-137	30.000	Y	1.20E-02	4.20E-09	4.90E-09
Cs-138	0.537	H	1.20E-02	2.10E-08	2.40E-08
Ba-139	1.378	H	4.00E-04	2.40E-09	2.70E-09
Ba-140	12.740	D	4.00E-04	2.10E-09	2.40E-09
Ba-141	0.304	H	4.00E-04	4.30E-09	4.90E-09
Ba-142	0.177	H	4.00E-04	7.90E-09	9.00E-09
La-140	1.678	D	5.00E-06	1.[illegible]0E-08	1.70E-08
La-142	1.542	H	5.00E-06	1.50E-08	1.80E-08
Ce-141	32.501	D	1.00E-04	5.50E-10	6.20E-10
Ce-143	33.000	H	1.00E-04	2.20E-09	2.50E-09
Ce-144	284.300	D	1.00E-04	3.20E-10	3.70E-10
Pr-143	13.560	D	5.00E-06	0.00E+00	0.00E+00
Pr-144	0.288	H	5.00E-06	2.00E-10	2.30E-10
Nd-147	10.980	D	5.00E-06	1.00E-09	1.20E-09
W-187	23.900	H	5.00E-04	3.10E-09	3.60E-09
Np-239	2.360	D	5.00E-06	9.50E-10	1.10E-09
K-40	1.28E+09	Y	1.00E-02	0.00E+00	0.00E+00
Co-57	270.900	D	1.00E-03	9.10E-10	1.00E-09
Sr-85	64.840	D	8.00E-04	0.00E+00	0.00E+00
Y-88	106.640	D	1.00E-05	0.00E+00	0.00E+00
Nb-94	2.03E+04	Y	2.50E-03	0.00E+00	0.00E+00
Nb-97	1.202	H	2.50E-03	4.60E-09	5.40E-09
Cd-109	1.271	Y	1.20E-04	0.00E+00	0.00E+00
Sn-113	115.100	D	2.50E-03	0.00E+00	0.00E+00
Ba-133	10.740	Y	4.00E-04	0.00E+00	0.00E+00
Te-134	0.697	H	1.00E-03	1.00E-09	1.20E-09
Ce-139	137.660	D	1.00E-04	0.00E+00	0.00E+00
Hg-203	46.600	D	3.80E-02	0.00E+00	0.00E+00

Table 3-3a

ADULT INGESTION DOSE FACTORS

(mrem per pCi ingested)

Isotope	BONE	LIVER	TOT BODY	THYROID	KIDNEY	LUNG	GILLI
H-3	0.00E+00	1.05E-07	1.05E-07	1.05E-07	1.05E-07	1.05E-07	1.05E-07
Be-7	2.77E-09	6.26E-09	3.10E-09	0.00E+00	6.58E-09	0.00E+00	1.08E-06
Na-24	1.70E-06	1.70E-06	1.70E-06	1.70E-06	1.70E-06	1.70E-06	1.70E-06
P-32	1.93E-04	1.20E-05	7.46E-06	0.00E+00	0.00E+00	0.00E+00	2.17E-05
Cr-51	0.00E+00	0.00E+00	2.66E-09	1.59E-09	5.86E-10	3.53E-09	6.69E-07
Mn-54	0.00E+00	4.57E-06	8.72E-07	0.00E+00	1.36E-06	0.00E+00	1.40E-05
Mn-56	0.00E+00	1.15E-07	2.04E-08	0.00E+00	1.46E-07	0.00E+00	3.67E-06
Fe-55	2.75E-06	1.90E-06	4.43E-07	0.00E+00	0.00E+00	1.06E-06	1.09E-06
Fe-59	4.34E-06	1.02E-05	3.91E-06	0.00E+00	0.00E+00	2.85E-06	3.40E-05
Co-58	0.00E+00	7.45E-07	1.67E-06	0.00E+00	0.00E+00	0.00E+00	1.51E-05
Co-60	0.00E+00	2.14E-06	4.72E-06	0.00E+00	0.00E+00	0.00E+00	4.02E-05
Ni-63	1.30E-04	9.01E-06	4.36E-06	0.00E+00	0.00E+00	0.00E+00	1.88E-06
Ni-65	5.28E-07	6.86E-08	3.13E-08	0.00E+00	0.00E+00	0.00E+00	1.74E-06
Cu-64	0.00E+00	8.33E-08	3.91E-08	0.00E+00	2.10E-07	0.00E+00	7.10E-06
Zn-65	4.84E-06	1.54E-05	6.96E-06	0.00E+00	1.03E-05	0.00E+00	9.70E-06
Zn-69	1.03E-08	1.97E-08	1.37E-09	0.00E+00	1.28E-08	0.00E+00	2.96E-09
Br-83	0.00E+00	0.00E+00	4.02E-08	0.00E+00	0.00E+00	0.00E+00	5.79E-08
Br-84	0.00E+00	0.00E+00	5.21E-08	0.00E+00	0.00E+00	0.00E+00	4.09E-13
Br-85	0.00E+00	0.00E+00	2.14E-09	0.00E+00	0.00E+00	0.00E+00	0.00E+00
Rb-86	0.00E+00	2.11E-05	9.83E-06	0.00E+00	0.00E+00	0.00E+00	4.16E-06
Rb-88	0.00E+00	6.05E-08	3.21E-08	0.00E+00	0.00E+00	0.00E+00	8.36E-19
Rb-89	0.00E+00	4.01E-08	2.82E-08	0.00E+00	0.00E+00	0.00E+00	2.33E-21
Sr-89	3.08E-04	0.00E+00	8.84E-06	0.00E+00	0.00E+00	0.00E+00	4.94E-05
Sr-90	7.58E-03	0.00E+00	1.86E-03	0.00E+00	0.00E+00	0.00E+00	2.19E-04
Sr-91	5.67E-06	0.00E+00	2.29E-07	0.00E+00	0.00E+00	0.00E+00	2.70E-05
Sr-92	2.15E-06	0.00E+00	9.30E-08	0.00E+00	0.00E+00	0.00E+00	4.26E-05
Y-90	9.62E-09	0.00E+00	2.58E-10	0.00E+00	0.00E+00	0.00E+00	1.02E-04
Y-91m	9.09E-11	0.00E+00	3.52E-12	0.00E+00	0.00E+00	0.00E+00	2.67E-10
Y-91	1.41E-07	0.00E+00	3.77E-09	0.00E+00	0.00E+00	0.00E+00	7.76E-05
Y-92	8.45E-10	0.00E+00	2.47E-11	0.00E+00	0.00E+00	0.00E+00	1.48E-05
Y-93	2.68E-09	0.00E+00	7.40E-11	0.00E+00	0.00E+00	0.00E+00	8.50E-05
Zr-95	3.04E-08	9.75E-09	6.60E-09	0.00E+00	1.53E-08	0.00E+00	3.09E-05
Zr-97	1.68E-09	3.39E-10	1.55E-10	0.00E+00	5.12E-10	0.00E+00	1.05E-04
Nb-95	6.22E-09	3.46E-09	1.86E-09	0.00E+00	3.42E-09	0.00E+00	2.10E-05
Mo-99	0.00E+00	4.31E-06	8.20E-07	0.00E+00	9.76E-06	0.00E+00	9.99E-06
Tc-99m	2.47E-10	6.98E-10	8.89E-09	0.00E+00	1.06E-08	3.42E-10	4.13E-07
Tc-101	2.54E-10	3.66E-10	3.59E-09	0.00E+00	6.59E-09	1.87E-10	1.10E-21
Ru-103	1.85E-07	0.00E+00	7.97E-08	0.00E+00	7.06E-07	0.00E+00	2.16E-05
Ru-105	1.54E-08	0.00E+00	6.08E-09	0.00E+00	1.99E-07	0.00E+00	9.42E-06
Ru-106	2.75E-06	0.00E+00	3.48E-07	0.00E+00	5.31E-06	0.00E+00	1.78E-04
Ag-110m	1.60E-07	1.48E-07	8.79E-08	0.00E+00	2.91E-07	0.00E+00	6.04E-05
Sb-122	2.00E-07	4.60E-09	6.90E-08	3.10E-09	0.00E+00	1.20E-07	7.60E-05
Sb-124	2.80E-06	5.30E-08	1.10E-06	6.80E-09	0.00E+00	2.18E-06	7.95E-05
Sb-125	1.79E-06	2.00E-08	4.26E-07	1.82E-09	0.00E+00	1.38E-06	1.97E-05

Table 3-3a

ADULT INGESTION DOSE FACTORS

(mrem per pCi ingested)

Isotope	BONE	LIVER	TOT BODY	THYROID	KIDNEY	LUNG	GILLI
Te-125m	2.68E-06	9.71E-07	3.59E-07	8.06E-07	1.09E-05	0.00E+00	1.07E-05
Te-127m	6.77E-06	2.42E-06	8.25E-07	1.73E-06	2.75E-05	0.00E+00	2.27E-05
Te-127	1.10E-07	3.95E-08	2.38E-08	8.15E-08	4.48E-07	0.00E+00	8.68E-06
Te-129m	1.15E-05	4.29E-06	1.82E-06	3.95E-06	4.80E-05	0.00E+00	5.79E-05
Te-129	3.14E-08	1.18E-08	7.65E-09	2.41E-08	1.32E-07	0.00E+00	2.37E-08
Te-131m	1.73E-06	8.46E-07	7.05E-07	1.34E-06	8.57E-06	0.00E+00	8.40E-05
Te-131	1.97E-08	8.23E-09	6.22E-09	1.62E-08	8.63E-08	0.00E+00	2.79E-09
Te-132	2.52E-06	1.63E-06	1.53E-06	1.80E-06	1.57E-05	0.00E+00	7.71E-05
I-130	7.56E-07	2.23E-06	8.80E-07	1.89E-04	3.48E-06	0.00E+00	1.92E-06
I-131	4.16E-06	5.95E-06	3.41E-06	1.95E-03	1.02E-05	0.00E+00	1.57E-06
I-132	2.03E-07	5.43E-07	1.90E-07	1.90E-05	8.65E-07	0.00E+00	1.02E-07
I-133	1.42E-06	2.47E-06	7.53E-07	3.63E-04	4.31E-06	0.00E+00	2.22E-06
I-134	1.06E-07	2.88E-07	1.03E-07	4.99E-06	4.58E-07	0.00E+00	2.51E-10
I-135	4.43E-07	1.16E-06	4.28E-07	7.65E-05	1.86E-06	0.00E+00	1.31E-06
Cs-134	6.22E-05	1.48E-04	1.21E-04	0.00E+00	4.79E-05	1.59E-05	2.59E-06
Cs-136	6.51E-06	2.57E-05	1.85E-05	0.00E+00	1.43E-05	1.96E-06	2.92E-06
Cs-137	7.97E-05	1.09E-04	7.14E-05	0.00E+00	3.70E-05	1.23E-05	2.11E-06
Cs-138	5.52E-08	1.09E-07	5.40E-08	0.00E+00	8.01E-08	7.91E-09	4.65E-13
Ba-139	9.70E-08	6.91E-11	2.84E-09	0.00E+00	6.46E-11	3.92E-11	1.72E-07
Ba-140	2.03E-05	2.55E-08	1.33E-06	0.00E+00	8.67E-09	1.46E-08	4.18E-05
Ba-141	4.71E-08	3.56E-11	1.59E-09	0.00E+00	3.31E-11	2.02E-11	2.22E-17
Ba-142	2.13E-08	2.19E-11	1.34E-09	0.00E+00	1.85E-11	1.24E-11	3.00E-26
La-140	2.50E-09	1.26E-09	3.33E-10	0.00E+00	0.00E+00	0.00E+00	9.25E-05
La-142	1.28E-10	5.82E-11	1.45E-11	0.00E+00	0.00E+00	0.00E+00	4.25E-07
Ce-141	9.36E-09	6.33E-09	7.18E-10	0.00E+00	2.94E-09	0.00E+00	2.42E-05
Ce-143	1.65E-09	1.22E-06	1.35E-10	0.00E+00	5.37E-10	0.00E+00	4.56E-05
Ce-144	4.88E-07	2.04E-07	2.62E-08	0.00E+00	1.21E-07	0.00E+00	1.65E-04
Pr-143	9.20E-09	3.69E-09	4.56E-10	0.00E+00	2.13E-09	0.00E+00	4.03E-05
Pr-144	3.01E-11	1.25E-11	1.53E-12	0.00E+00	7.05E-12	0.00E+00	4.33E-18
Nd-147	6.29E-09	7.27E-09	4.35E-10	0.00E+00	4.25E-09	0.00E+00	3.49E-05
W-187	1.03E-07	8.61E-08	3.01E-08	0.00E+00	0.00E+00	0.00E+00	2.82E-05
Np-239	1.19E-09	1.17E-10	6.45E-11	0.00E+00	3.65E-10	0.00E+00	2.40E-05
K-40	0.00E+00	0.00E+00	0.00E+00	0.00E+00	0.00E+00	0.00E+00	0.00E+00
Co-57	0.00E+00	1.75E-07	2.91E-07	0.00E+00	0.00E+00	0.00E+00	4.44E-06
Sr-85	0.00E+00	0.00E+00	0.00E+00	0.00E+00	0.00E+00	0.00E+00	0.00E+00
Y-88	0.00E+00	0.00E+00	0.00E+00	0.00E+00	0.00E+00	0.00E+00	0.00E+00
Nb-94	0.00E+00	0.00E+00	0.00E+00	0.00E+00	0.00E+00	0.00E+00	0.00E+00
Nb-97	5.22E-11	1.32E-11	4.82E-12	0.00E+00	1.54E-11	0.00E+00	4.87E-08
Cd-109	0.00E+00	0.00E+00	0.00E+00	0.00E+00	0.00E+00	0.00E+00	0.00E+00
Sn-113	0.00E+00	0.00E+00	0.00E+00	0.00E+00	0.00E+00	0.00E+00	0.00E+00
Ba-133	0.00E+00	0.00E+00	0.00E+00	0.00E+00	0.00E+00	0.00E+00	0.00E+00
Te-134	3.24E-08	2.12E-08	1.30E-08	2.83E-08	2.05E-07	0.00E+00	3.59E-11
Ce-139	0.00E+00	0.00E+00	0.00E+00	0.00E+00	0.00E+00	0.00E+00	0.00E+00
Hg-203	0.00E+00	0.00E+00	0.00E+00	0.00E+00	0.00E+00	0.00E+00	0.00E+00

Table 3-3b

TEEN INGESTION DOSE FACTORS

(mrem per pCi ingested)

Isotope	BONE	LIVER	TOT BODY	THYROID	KIDNEY	LUNG	GILLI
H-3	0.00E+00	1.06E-07	1.06E-07	1.06E-07	1.06E-07	1.06E-07	1.06E-07
Be-7	3.96E-09	8.87E-09	4.43E-09	0.00E+00	9.40E-09	0.00E+00	1.08E-06
Na-24	2.30E-06	2.30E-06	2.30E-06	2.30E-06	2.30E-06	2.30E-06	2.30E-06
P-32	2.76E-04	1.71E-05	1.07E-05	0.00E+00	0.00E+00	0.00E+00	2.32E-05
Cr-51	0.00E+00	0.00E+00	3.60E-09	2.00E-09	7.89E-10	5.14E-09	6.05E-07
Mn-54	0.00E+00	5.90E-06	1.17E-06	0.00E+00	1.76E-06	0.00E+00	1.21E-05
Mn-56	0.00E+00	1.58E-07	2.81E-08	0.00E+00	2.00E-07	0.00E+00	1.04E-05
Fe-55	3.78E-06	2.68E-06	6.25E-07	0.00E+00	0.00E+00	1.70E-06	1.16E-06
Fe-59	5.87E-06	1.37E-05	5.29E-06	0.00E+00	0.00E+00	4.32E-06	3.24E-05
Co-58	0.00E+00	9.72E-07	2.24E-06	0.00E+00	0.00E+00	0.00E+00	1.34E-05
Co-60	0.00E+00	2.81E-06	6.33E-06	0.00E+00	0.00E+00	0.00E+00	3.66E-05
Ni-63	1.77E-04	1.25E-05	6.00E-06	0.00E+00	0.00E+00	0.00E+00	1.99E-06
Ni-65	7.49E-07	9.57E-08	4.36E-08	0.00E+00	0.00E+00	0.00E+00	5.19E-06
Cu-64	0.00E+00	1.15E-07	5.41E-08	0.00E+00	2.91E-07	0.00E+00	8.92E-06
Zn-65	5.76E-06	2.00E-05	9.33E-06	0.00E+00	1.28E-05	0.00E+00	8.47E-06
Zn-69	1.47E-08	2.80E-08	1.96E-09	0.00E+00	1.83E-08	0.00E+00	5.16E-08
Br-83	0.00E+00	0.00E+00	5.74E-08	0.00E+00	0.00E+00	0.00E+00	0.00E+00
Br-84	0.00E+00	0.00E+00	7.22E-08	0.00E+00	0.00E+00	0.00E+00	0.00E+00
Br-85	0.00E+00	0.00E+00	3.05E-09	0.00E+00	0.00E+00	0.00E+00	0.00E+00
Rb-86	0.00E+00	2.98E-05	1.40E-05	0.00E+00	0.00E+00	0.00E+00	4.41E-06
Rb-88	0.00E+00	8.52E-08	4.54E-08	0.00E+00	0.00E+00	0.00E+00	7.30E-15
Rb-89	0.00E+00	5.50E-08	3.89E-08	0.00E+00	0.00E+00	0.00E+00	8.43E-17
Sr-89	4.40E-04	0.00E+00	1.26E-05	0.00E+00	0.00E+00	0.00E+00	5.24E-05
Sr-90	8.30E-03	0.00E+00	2.05E-03	0.00E+00	0.00E+00	0.00E+00	2.33E-04
Sr-91	8.07E-06	0.00E+00	3.21E-07	0.00E+00	0.00E+00	0.00E+00	3.66E-05
Sr-92	3.05E-06	0.00E+00	1.30E-07	0.00E+00	0.00E+00	0.00E+00	7.77E-05
Y-90	1.37E-08	0.00E+00	3.69E-10	0.00E+00	0.00E+00	0.00E+00	1.13E-04
Y-91m	1.29E-10	0.00E+00	4.93E-12	0.00E+00	0.00E+00	0.00E+00	6.09E-09
Y-91	2.01E-07	0.00E+00	5.39E-09	0.00E+00	0.00E+00	0.00E+00	8.24E-05
Y-92	1.21E-09	0.00E+00	3.50E-11	0.00E+00	0.00E+00	0.00E+00	3.32E-05
Y-93	3.83E-09	0.00E+00	1.05E-10	0.00E+00	0.00E+00	0.00E+00	1.17E-04
Zr-95	4.12E-08	1.30E-08	8.94E-09	0.00E+00	1.91E-08	0.00E+00	3.00E-05
Zr-97	2.37E-09	4.69E-10	2.16E-10	0.00E+00	7.11E-10	0.00E+00	1.27E-04
Nb-95	8.22E-09	4.56E-09	2.51E-09	0.00E+00	4.42E-09	0.00E+00	1.95E-05
Mo-99	0.00E+00	6.03E-06	1.15E-06	0.00E+00	1.38E-05	0.00E+00	1.08E-05
Tc-99m	3.32E-10	9.26E-10	1.20E-08	0.00E+00	1.38E-08	5.14E-10	6.08E-07
Tc-101	3.60E-10	5.12E-10	5.03E-09	0.00E+00	9.26E-09	3.12E-10	8.75E-17
Ru-103	2.55E-07	0.00E+00	1.09E-07	0.00E+00	8.99E-07	0.00E+00	2.13E-05
Ru-105	2.18E-08	0.00E+00	8.46E-09	0.00E+00	2.75E-07	0.00E+00	1.76E-05
Ru-106	3.92E-06	0.00E+00	4.94E-07	0.00E+00	7.56E-06	0.00E+00	1.88E-04
Ag-110m	2.05E-07	1.94E-07	1.18E-07	0.00E+00	3.70E-07	0.00E+00	5.45E-05
Sb-122	3.30E-07	6.42E-09	9.64E-08	4.19E-09	0.00E+00	2.06E-07	6.92E-05
Sb-124	3.86E-06	7.12E-08	1.51E-06	8.79E-09	0.00E+00	3.37E-06	7.81E-05
Sb-125	2.48E-06	2.71E-08	5.79E-07	2.36E-09	0.00E+00	2.16E-06	1.92E-05

Table 3-3b

TEEN INGESTION DOSE FACTORS

(mrem per pCi ingested)

Isotope	BONE	LIVER	TOT BODY	THYROID	KIDNEY	LUNG	GILLI
Te-125m	3.83E-06	1.38E-06	5.12E-07	1.07E-06	0.00E+00	0.00E+00	1.13E-05
Te-127m	9.67E-06	3.43E-06	1.15E-06	2.30E-06	3.92E-05	0.00E+00	2.41E-05
Te-127	1.58E-07	5.60E-08	3.40E-08	1.09E-07	6.40E-07	0.00E+00	1.22E-05
Te-129m	1.63E-05	6.05E-06	2.58E-06	5.26E-06	6.82E-05	0.00E+00	6.12E-05
Te-129	4.48E-08	1.67E-08	1.09E-08	3.20E-08	1.88E-07	0.00E+00	2.45E-07
Te-131m	2.44E-06	1.17E-06	9.76E-07	1.76E-06	1.22E-05	0.00E+00	9.39E-05
Te-131	2.79E-08	1.15E-08	8.72E-09	2.15E-08	1.22E-07	0.00E+00	2.29E-09
Te-132	3.49E-06	2.21E-06	2.08E-06	2.33E-06	2.12E-05	0.00E+00	7.00E-05
I-130	1.03E-06	2.98E-06	1.19E-06	2.43E-04	4.59E-06	0.00E+00	2.29E-06
I-131	5.85E-06	8.19E-06	4.40E-06	2.39E-03	1.41E-05	0.00E+00	1.62E-06
I-132	2.79E-07	7.30E-07	2.62E-07	2.46E-05	1.15E-06	0.00E+00	3.18E-07
I-133	2.01E-06	3.41E-06	1.04E-06	4.76E-04	5.98E-06	0.00E+00	2.58E-06
I-134	1.46E-07	3.87E-07	1.39E-07	6.45E-06	6.10E-07	0.00E+00	5.10E-09
I-135	6.10E-07	1.57E-06	5.82E-07	1.01E-04	2.48E-06	0.00E+00	1.74E-06
Cs-134	8.37E-05	1.97E-04	9.14E-05	0.00E+00	6.26E-05	2.39E-05	2.45E-06
Cs-136	8.59E-06	3.38E-05	2.27E-05	0.00E+00	1.84E-05	2.90E-06	2.72E-06
Cs-137	1.12E-04	1.49E-04	5.19E-05	0.00E+00	5.07E-05	1.97E-05	2.12E-06
Cs-138	7.76E-08	1.49E-07	7.45E-08	0.00E+00	1.10E-07	1.28E-08	6.76E-11
Ba-139	1.39E-07	9.78E-11	4.05E-09	0.00E+00	9.22E-11	6.74E-11	1.24E-06
Ba-140	2.84E-05	3.48E-08	1.83E-06	0.00E+00	1.18E-08	2.34E-08	4.38E-05
Ba-141	6.71E-08	5.01E-11	2.24E-09	0.00E+00	4.65E-11	3.43E-11	1.43E-13
Ba-142	2.99E-08	2.99E-11	1.84E-09	0.00E+00	2.53E-11	1.99E-11	9.18E-20
La-140	3.48E-09	1.71E-09	4.55E-10	0.00E+00	0.00E+00	0.00E+00	9.82E-05
La-142	1.79E-10	7.95E-11	1.98E-11	0.00E+00	0.00E+00	0.00E+00	2.42E-06
Ce-141	1.33E-08	8.88E-09	1.02E-09	0.00E+00	4.18E-09	0.00E+00	2.54E-05
Ce-143	2.35E-09	1.71E-06	1.91E-10	0.00E+00	7.67E-10	0.00E+00	5.14E-05
Ce-144	6.96E-07	2.88E-07	3.74E-08	0.00E+00	1.72E-07	0.00E+00	1.75E-04
Pr-143	1.31E-08	5.23E-09	6.52E-10	0.00E+00	3.04E-09	0.00E+00	4.31E-05
Pr-144	4.30E-11	1.76E-11	2.18E-12	0.00E+00	1.01E-11	0.00E+00	4.74E-14
Nd-147	9.38E-09	1.02E-08	6.11E-10	0.00E+00	5.99E-09	0.00E+00	3.68E-05
W-187	1.46E-07	1.19E-07	4.17E-08	0.00E+00	0.00E+00	0.00E+00	3.22E-05
Np-239	1.76E-09	1.66E-10	9.22E-11	0.00E+00	5.21E-10	0.00E+00	2.67E-05
K-40	0.00E+00	0.00E+00	0.00E+00	0.00E+00	0.00E+00	0.00E+00	0.00E+00
Co-57	0.00E+00	2.38E-07	3.99E-07	0.00E+00	0.00E+00	0.00E+00	4.44E-06
Sr-85	0.00E+00	0.00E+00	0.00E+00	0.00E+00	0.00E+00	0.00E+00	0.00E+00
Y-88	0.00E+00	0.00E+00	0.00E+00	0.00E+00	0.00E+00	0.00E+00	0.00E+00
Nb-94	0.00E+00	0.00E+00	0.00E+00	0.00E+00	0.00E+00	0.00E+00	0.00E+00
Nb-97	7.37E-11	1.83E-11	6.68E-12	0.00E+00	2.14E-11	0.00E+00	4.37E-07
Cd-109	0.00E+00	0.00E+00	0.00E+00	0.00E+00	0.00E+00	0.00E+00	0.00E+00
Sn-113	0.00E+00	0.00E+00	0.00E+00	0.00E+00	0.00E+00	0.00E+00	0.00E+00
Ba-133	0.00E+00	0.00E+00	0.00E+00	0.00E+00	0.00E+00	0.00E+00	0.00E+00
Te-134	4.47E-08	2.87E-08	3.00E-08	3.67E-08	2.74E-07	0.00E+00	1.66E-09
Ce-139	0.00E+00	0.00E+00	0.00E+00	0.00E+00	0.00E+00	0.00E+00	0.00E+00
Hg-203	0.00E+00	0.00E+00	0.00E+00	0.00E+00	0.00E+00	0.00E+00	0.00E+00

Table 3-3c

CHILD INGESTION DOSE FACTORS

(mrem per pCi ingested)

Isotope	BONE	LIVER	TOT BODY	THYROID	KIDNEY	LUNG	GILLI
H-3	0.00E+00	2.03E-07	2.03E-07	2.03E-07	2.03E-07	2.03E-07	2.03E-07
Be-7	1.18E-08	2.00E-08	1.32E-08	0.00E+00	1.97E-08	0.00E+00	1.12E-06
Na-24	5.80E-06	5.80E-06	5.80E-06	5.80E-06	5.80E-06	5.80E-06	5.80E-06
P-32	8.25E-04	3.86E-05	3.18E-05	0.00E+00	0.00E+00	0.00E+00	2.28E-05
Cr-51	0.00E+00	0.00E+00	8.90E-09	4.94E-09	1.35E-09	9.02E-09	4.72E-07
Mn-54	0.00E+00	1.07E-05	2.85E-06	0.00E+00	3.00E-06	0.00E+00	8.98E-06
Mn-56	0.00E+00	3.34E-07	7.54E-08	0.00E+00	4.04E-07	0.00E+00	4.84E-05
Fe-55	1.15E-05	6.10E-06	1.89E-06	0.00E+00	0.00E+00	3.45E-06	1.13E-06
Fe-59	1.65E-05	2.67E-05	1.33E-05	0.00E+00	0.00E+00	7.74E-06	2.78E-05
Co-58	0.00E+00	1.80E-06	5.51E-06	0.00E+00	0.00E+00	0.00E+00	1.05E-05
Co-60	0.00E+00	5.29E-06	1.56E-05	0.00E+00	0.00E+00	0.00E+00	2.93E-05
Ni-63	5.38E-04	2.88E-05	1.83E-05	0.00E+00	0.00E+00	0.00E+00	1.94E-06
Ni-65	2.22E-06	2.09E-07	1.22E-07	0.00E+00	0.00E+00	0.00E+00	2.56E-05
Cu-64	0.00E+00	2.45E-07	1.48E-07	0.00E+00	5.92E-07	0.00E+00	1.15E-05
Zn-65	1.37E-05	3.65E-05	2.27E-05	0.00E+00	2.30E-05	0.00E+00	6.41E-06
Zn-69	4.38E-08	6.33E-08	5.85E-09	0.00E+00	3.84E-08	0.00E+00	3.99E-06
Br-83	0.00E+00	0.00E+00	1.71E-07	0.00E+00	0.00E+00	0.00E+00	0.00E+00
Br-84	0.00E+00	0.00E+00	1.98E-07	0.00E+00	0.00E+00	0.00E+00	0.00E+00
Br-85	0.00E+00	0.00E+00	9.12E-09	0.00E+00	0.00E+00	0.00E+00	0.00E+00
Rb-86	0.00E+00	6.70E-05	4.12E-05	0.00E+00	0.00E+00	0.00E+00	4.31E-06
Rb-88	0.00E+00	1.90E-07	1.32E-07	0.00E+00	0.00E+00	0.00E+00	9.32E-09
Rb-89	0.00E+00	1.17E-07	1.04E-07	0.00E+00	0.00E+00	0.00E+00	1.02E-09
Sr-89	1.32E-03	0.00E+00	3.77E-05	0.00E+00	0.00E+00	0.00E+00	5.11E-05
Sr-90	1.70E-02	0.00E+00	4.31E-03	0.00E+00	0.00E+00	0.00E+00	2.29E-04
Sr-91	2.40E-05	0.00E+00	9.06E-07	0.00E+00	0.00E+00	0.00E+00	5.30E-05
Sr-92	9.03E-06	0.00E+00	3.62E-07	0.00E+00	0.00E+00	0.00E+00	1.71E-04
Y-90	4.11E-08	0.00E+00	1.10E-09	0.00E+00	0.00E+00	0.00E+00	1.17E-04
Y-91m	3.82E-10	0.00E+00	1.39E-11	0.00E+00	0.00E+00	0.00E+00	7.48E-07
Y-91	6.02E-07	0.00E+00	1.61E-08	0.00E+00	0.00E+00	0.00E+00	8.02E-05
Y-92	3.60E-09	0.00E+00	1.03E-10	0.00E+00	0.00E+00	0.00E+00	1.04E-04
Y-93	1.14E-08	0.00E+00	3.13E-10	0.00E+00	0.00E+00	0.00E+00	1.70E-04
Zr-95	1.16E-07	2.55E-08	2.27E-08	0.00E+00	3.65E-08	0.00E+00	2.66E-05
Zr-97	6.99E-09	1.01E-09	5.96E-10	0.00E+00	1.45E-09	0.00E+00	1.53E-04
Nb-95	2.25E-08	8.76E-09	6.26E-09	0.00E+00	8.23E-09	0.00E+00	1.62E-05
Mo-99	0.00E+00	1.33E-05	3.29E-06	0.00E+00	2.84E-05	0.00E+00	1.10E-05
Tc-99m	9.23E-10	1.81E-09	3.00E-08	0.00E+00	2.63E-08	9.19E-10	1.03E-06
Tc-101	1.07E-09	1.12E-09	1.42E-08	0.00E+00	1.91E-08	5.92E-10	3.56E-09
Ru-103	7.31E-07	0.00E+00	2.81E-07	0.00E+00	1.84E-06	0.00E+00	1.89E-05
Ru-105	6.45E-08	0.00E+00	2.34E-08	0.00E+00	5.67E-07	0.00E+00	4.21E-05
Ru-106	1.17E-05	0.00E+00	1.46E-06	0.00E+00	1.58E-05	0.00E+00	1.82E-04
Ag-110m	5.39E-07	3.64E-07	2.91E-07	0.00E+00	6.78E-07	0.00E+00	4.33E-05
Sb-122	9.83E-07	1.45E-08	2.88E-07	1.26E-08	0.00E+00	4.00E-07	7.56E-05
Sb-124	1.11E-05	1.44E-07	3.88E-06	2.44E-08	0.00E+00	6.15E-06	6.93E-05
Sb-125	7.15E-06	5.51E-08	1.50E-06	6.63E-09	0.00E+00	3.98E-06	1.71E-05

Table 3-3c

CHILD INGESTION DOSE FACTORS

(mrem per pCi ingested)

Isotope	BONE	LIVER	TOT BODY	THYROID	KIDNEY	LUNG	GILLI
Te-125m	1.14E-05	3.09E-06	1.52E-06	3.20E-06	0.00E+00	0.00E+00	1.10E-05
Te-127m	2.89E-05	7.78E-06	3.43E-06	6.91E-06	8.24E-05	0.00E+00	2.34E-05
Te-127	4.71E-07	1.27E-07	1.01E-07	3.26E-07	1.34E-06	0.00E+00	1.84E-05
Te-129m	4.87E-05	1.36E-05	7.56E-06	1.57E-05	1.43E-04	0.00E+00	5.94E-05
Te-129	1.34E-07	3.74E-08	3.18E-08	9.56E-08	3.92E-07	0.00E+00	8.34E-06
Te-131m	7.20E-06	2.49E-06	2.65E-06	5.12E-06	2.41E-05	0.00E+00	1.01E-04
Te-131	8.30E-08	2.53E-08	2.47E-08	6.35E-08	2.51E-07	0.00E+00	4.36E-07
Te-132	1.01E-05	4.47E-06	5.40E-06	6.51E-06	4.15E-05	0.00E+00	4.50E-05
I-130	2.92E-06	5.90E-06	3.04E-06	6.50E-04	8.82E-06	0.00E+00	2.76E-06
I-131	1.72E-05	1.73E-05	9.83E-06	5.72E-03	2.84E-05	0.00E+00	1.54E-06
I-132	8.00E-07	1.47E-06	6.76E-07	6.82E-05	2.25E-06	0.00E+00	1.73E-06
I-133	5.92E-06	7.32E-06	2.77E-06	1.36E-03	1.22E-05	0.00E+00	2.95E-06
I-134	4.19E-07	7.78E-07	3.58E-07	1.79E-05	1.19E-06	0.00E+00	5.16E-07
I-135	1.75E-06	3.15E-06	1.49E-06	2.79E-04	4.83E-06	0.00E+00	2.40E-06
Cs-134	2.34E-04	3.84E-04	8.10E-05	0.00E+00	1.19E-04	4.27E-05	2.07E-06
Cs-136	2.35E-05	6.46E-05	4.18E-05	0.00E+00	3.44E-05	5.13E-06	2.27E-06
Cs-137	3.27E-04	3.13E-04	4.62E-05	0.00E+00	1.02E-04	3.67E-05	1.96E-06
Cs-138	2.28E-07	3.17E-07	2.01E-07	0.00E+00	2.23E-07	2.40E-08	1.46E-07
Ba-139	4.14E-07	2.21E-10	1.20E-08	0.00E+00	1.93E-10	1.30E-10	2.39E-05
Ba-140	8.31E-05	7.28E-08	4.85E-06	0.00E+00	2.37E-08	4.34E-08	4.21E-05
Ba-141	2.00E-07	1.12E-10	6.51E-09	0.00E+00	9.69E-11	6.58E-10	1.14E-07
Ba-142	8.74E-08	6.29E-11	4.88E-09	0.00E+00	5.09E-11	3.70E-11	1.14E-09
La-140	1.01E-08	3.53E-09	1.19E-09	0.00E+00	0.00E+00	0.00E+00	9.84E-05
La-142	5.24E-10	1.67E-10	5.23E-11	0.00E+00	0.00E+00	0.00E+00	3.31E-05
Ce-141	3.97E-08	1.98E-08	2.94E-09	0.00E+00	8.68E-09	0.00E+00	2.47E-05
Ce-143	6.99E-09	3.79E-06	5.49E-10	0.00E+00	1.59E-09	0.00E+00	5.55E-05
Ce-144	2.08E-06	6.52E-07	1.11E-07	0.00E+00	3.61E-07	0.00E+00	1.70E-04
Pr-143	3.93E-08	1.18E-03	1.95E-09	0.00E+00	6.39E-09	0.00E+00	4.24E-05
Pr-144	1.29E-10	3.99E-11	6.49E-12	0.00E+00	2.11E-11	0.00E+00	8.59E-08
Nd-147	2.79E-08	2.26E-08	1.75E-09	0.00E+00	1.24E-08	0.00E+00	3.58E-05
W-187	4.29E-07	2.54E-07	1.14E-07	0.00E+00	0.00E+00	0.00E+00	3.57E-05
Np-239	5.25E-09	3.77E-10	2.65E-10	0.00E+00	1.09E-09	0.00E+00	2.79E-05
K-40	0.00E+00	0.00E+00	0.00E+00	0.00E+00	0.00E+00	0.00E+00	0.00E+00
Co-57	0.00E+00	4.93E-07	9.98E-07	0.00E+00	0.00E+00	0.00E+00	4.04E-06
Sr-85	0.00E+00	0.00E+00	0.00E+00	0.00E+00	0.00E+00	0.00E+00	0.00E+00
Y-88	0.00E+00	0.00E+00	0.00E+00	0.00E+00	0.00E+00	0.00E+00	0.00E+00
Nb-94	0.00E+00	0.00E+00	0.00E+00	0.00E+00	0.00E+00	0.00E+00	0.00E+00
Nb-97	2.17E-10	3.92E-11	1.83E-11	0.00E+00	4.35E-11	0.00E+00	1.21E-05
Cd-109	0.00E+00	0.00E+00	0.00E+00	0.00E+00	0.00E+00	0.00E+00	0.00E+00
Sn-113	0.00E+00	0.00E+00	0.00E+00	0.00E+00	0.00E+00	0.00E+00	0.00E+00
Ba-133	0.00E+00	0.00E+00	0.00E+00	0.00E+00	0.00E+00	0.00E+00	0.00E+00
Te-134	1.29E-07	5.80E-08	7.74E-08	1.02E-07	5.37E-07	0.00E+00	5.89E-07
Ce-139	0.00E+00	0.00E+00	0.00E+00	0.00E+00	0.00E+00	0.00E+00	0.00E+00
Hg-203	0.00E+00	0.00E+00	0.00E+00	0.00E+00	0.00E+00	0.00E+00	0.00E+00

Table 3-3d

INFANT INGESTION DOSE FACTORS

(mrem per pCi ingested)

Isotope	BONE	LIVER	TOT BODY	THYROID	KIDNEY	LUNG	GILLI
H-3	0.00E+00	3.08E-07	3.08E-07	3.08E-07	3.08E-07	3.08E-07	3.08E-07
Be-7	2.26E-08	4.72E-08	2.51E-08	0.00E+00	3.34E-08	0.00E+00	1.11E-06
Na-24	1.01E-05	1.01E-05	1.01E-05	1.01E-05	1.01E-05	1.01E-05	1.01E-05
P-32	1.70E-03	1.00E-04	6.59E-05	0.00E+00	0.00E+00	0.00E+00	2.30E-05
Cr-51	0.00E+00	0.00E+00	1.41E-08	9.20E-09	2.01E-09	1.79E-08	4.11E-07
Mn-54	0.00E+00	1.99E-05	4.51E-06	0.00E+00	4.41E-06	0.00E+00	7.31E-06
Mn-56	0.00E+00	8.18E-07	1.41E-07	0.00E+00	7.03E-07	0.00E+00	7.43E-05
Fe-55	1.39E-05	8.98E-06	2.40E-06	0.00E+00	0.00E+00	4.39E-06	1.14E-06
Fe-59	3.08E-05	5.38E-05	2.12E-05	0.00E+00	0.00E+00	1.59E-05	2.57E-05
Co-58	0.00E+00	3.60E-06	8.98E-06	0.00E+00	0.00E+00	0.00E+00	8.97E-06
Co-60	0.00E+00	1.08E-05	2.55E-05	0.00E+00	0.00E+00	0.00E+00	2.57E-05
Ni-63	6.34E-04	3.92E-05	2.20E-05	0.00E+00	0.00E+00	0.00E+00	1.95E-06
Ni-65	4.70E-06	5.32E-07	2.42E-07	0.00E+00	0.00E+00	0.00E+00	4.05E-05
Cu-64	0.00E+00	6.09E-07	2.82E-07	0.00E+00	1.03E-06	0.00E+00	1.25E-05
Zn-65	1.84E-05	6.31E-05	2.91E-05	0.00E+00	3.06E-05	0.00E+00	5.33E-05
Zn-69	9.33E-08	1.68E-07	1.25E-08	0.00E+00	6.98E-08	0.00E+00	1.37E-05
Br-83	0.00E+00	0.00E+00	3.63E-07	0.00E+00	0.00E+00	0.00E+00	0.00E+00
Br-84	0.00E+00	0.00E+00	3.82E-07	0.00E+00	0.00E+00	0.00E+00	0.00E+00
Br-85	0.00E+00	0.00E+00	1.94E-08	0.00E+00	0.00E+00	0.00E+00	0.00E+00
Rb-86	0.00E+00	1.70E-04	8.40E-05	0.00E+00	0.00E+00	0.00E+00	4.35E-06
Rb-88	0.00E+00	4.98E-07	2.73E-07	0.00E+00	0.00E+00	0.00E+00	4.85E-07
Rb-89	0.00E+00	2.86E-07	1.97E-07	0.00E+00	0.00E+00	0.00E+00	9.74E-08
Sr-89	2.51E-03	0.00E+00	7.20E-05	0.00E+00	0.00E+00	0.00E+00	5.16E-05
Sr-90	1.85E-02	0.00E+00	4.71E-03	0.00E+00	0.00E+00	0.00E+00	2.31E-04
Sr-91	5.00E-05	0.00E+00	1.81E-06	0.00E+00	0.00E+00	0.00E+00	5.92E-05
Sr-92	1.92E-05	0.00E+00	7.13E-07	0.00E+00	0.00E+00	0.00E+00	2.07E-04
Y-90	8.69E-08	0.00E+00	2.33E-09	0.00E+00	0.00E+00	0.00E+00	1.20E-04
Y-91m	8.10E-10	0.00E+00	2.76E-11	0.00E+00	0.00E+00	0.00E+00	2.70E-06
Y-91	1.13E-06	0.00E+00	3.01E-08	0.00E+00	0.00E+00	0.00E+00	8.10E-05
Y-92	7.65E-09	0.00E+00	2.15E-10	0.00E+00	0.00E+00	0.00E+00	1.46E-04
Y-93	2.43E-08	0.00E+00	6.62E-10	0.00E+00	0.00E+00	0.00E+00	1.92E-04
Zr-95	2.06E-07	5.02E-08	3.56E-08	0.00E+00	5.41E-08	0.00E+00	2.50E-05
Zr-97	1.48E-08	2.54E-09	1.16E-09	0.00E+00	2.56E-09	0.00E+00	1.62E-04
Nb-95	4.20E-08	1.73E-08	1.00E-08	0.00E+00	1.24E-08	0.00E+00	1.46E-05
Mo-99	0.00E+00	3.40E-05	6.63E-06	0.00E+00	5.08E-05	0.00E+00	1.12E-05
Tc-99m	1.92E-09	3.96E-09	5.10E-08	0.00E+00	4.26E-08	2.07E-09	1.15E-06
Tc-101	2.27E-09	2.86E-09	2.83E-08	0.00E+00	3.40E-08	1.56E-09	4.86E-07
Ru-103	1.48E-06	0.00E+00	4.95E-07	0.00E+00	3.08E-06	0.00E+00	1.80E-05
Ru-105	1.36E-07	0.00E+00	4.58E-08	0.00E+00	1.00E-06	0.00E+00	5.41E-05
Ru-106	2.41E-05	0.00E+00	3.01E-06	0.00E+00	2.85E-05	0.00E+00	1.83E-04
Ag-110m	9.96E-07	7.27E-07	4.81E-07	0.00E+00	1.04E-06	0.00E+00	3.77E-05
Sb-122	2.10E-06	3.85E-08	6.13E-07	3.14E-08	0.00E+00	1.09E-06	7.65E-05
Sb-124	2.14E-05	3.15E-07	6.63E-06	5.68E-08	0.00E+00	1.34E-05	6.60E-05
Sb-125	1.23E-05	1.19E-07	2.53E-06	1.54E-08	0.00E+00	7.72E-06	1.64E-05

Table 3-3d

INFANT INGESTION DOSE FACTORS

(mrem per pCi ingested)

Isotope	BONE	LIVER	TOT BODY	THYROID	KIDNEY	LUNG	GILLI
Te-125m	2.33E-05	7.79E-06	3.15E-06	7.84E-06	0.00E+00	0.00E+00	1.11E-05
Te-127m	5.85E-05	1.94E-05	7.08E-06	1.69E-05	1.44E-04	0.00E+00	2.36E-05
Te-127	1.00E-06	3.35E-07	2.15E-07	8.14E-07	2.44E-06	0.00E+00	2.10E-05
Te-129m	1.00E-04	3.43E-05	1.54E-05	3.84E-05	2.50E-04	0.00E+00	5.97E-05
Te-129	2.84E-07	9.79E-08	6.63E-08	2.38E-07	7.07E-07	0.00E+00	2.27E-05
Te-131m	1.52E-05	6.12E-06	5.05E-06	1.24E-05	4.21E-05	0.00E+00	1.03E-04
Te-131	1.76E-07	6.50E-08	4.94E-08	1.57E-07	4.50E-07	0.00E+00	7.11E-06
Te-132	2.08E-05	1.03E-05	9.61E-06	1.52E-05	6.44E-05	0.00E+00	3.81E-05
I-130	6.00E-06	1.32E-05	5.30E-06	1.48E-03	1.45E-05	0.00E+00	2.83E-06
I-131	3.59E-05	4.23E-05	1.86E-05	1.39E-02	4.94E-05	0.00E+00	1.51E-06
I-132	1.66E-06	3.37E-06	1.20E-06	1.58E-04	3.76E-06	0.00E+00	2.73E-06
I-133	1.25E-05	1.82E-05	5.33E-06	3.31E-03	2.14E-05	0.00E+00	3.08E-06
I-134	8.69E-07	1.78E-06	6.33E-07	4.15E-05	1.99E-06	0.00E+00	1.84E-06
I-135	3.64E-06	7.24E-06	2.64E-06	6.49E-04	8.07E-06	0.00E+00	2.62E-06
Cs-134	3.77E-04	7.03E-04	7.10E-05	0.00E+00	1.81E-04	7.42E-05	1.91E-06
Cs-136	4.59E-05	1.35E-04	5.04E-05	0.00E+00	5.38E-05	1.10E-05	2.05E-06
Cs-137	5.22E-04	6.11E-04	4.33E-05	0.00E+00	1.64E-04	6.64E-05	1.91E-06
Cs-138	4.81E-07	7.82E-07	3.79E-07	0.00E+00	3.90E-07	6.09E-08	1.25E-06
Ba-139	8.81E-07	5.84E-10	2.55E-08	0.00E+00	3.51E-10	3.54E-10	5.58E-05
Ba-140	1.71E-04	1.71E-07	8.81E-06	0.00E+00	4.06E-08	1.05E-07	4.20E-05
Ba-141	4.25E-07	2.91E-10	1.34E-08	0.00E+00	1.75E-10	1.77E-10	5.19E-06
Ba-142	1.84E-07	1.53E-10	9.06E-09	0.00E+00	8.81E-11	9.26E-11	7.59E-07
La-140	2.11E-08	8.32E-09	2.14E-09	0.00E+00	0.00E+00	0.00E+00	9.77E-05
La-142	1.10E-09	4.04E-10	9.67E-11	0.00E+00	0.00E+00	0.00E+00	6.86E-05
Ce-141	7.87E-08	4.80E-08	5.65E-09	0.00E+00	1.48E-08	0.00E+00	2.48E-05
Ce-143	1.48E-08	9.82E-06	1.12E-09	0.00E+00	2.86E-09	0.00E+00	5.73E-05
Ce-144	2.98E-06	1.22E-06	1.67E-07	0.00E+00	4.93E-07	0.00E+00	1.71E-04
Pr-143	8.13E-08	3.04E-08	4.03E-09	0.00E+00	1.13E-08	0.00E+00	4.29E-05
Pr-144	2.74E-10	1.06E-10	1.38E-11	0.00E+00	3.84E-11	0.00E+00	4.93E-06
Nd-147	5.53E-08	5.68E-08	3.48E-09	0.00E+00	2.19E-08	0.00E+00	3.60E-05
W-187	9.03E-07	6.28E-07	2.17E-07	0.00E+00	0.00E+00	0.00E+00	3.69E-05
Np-239	1.11E-08	9.93E-10	5.61E-10	0.00E+00	1.98E-09	0.00E+00	2.87E-05
K-40	0.00E+00	0.00E+00	0.00E+00	0.00E+00	0.00E+00	0.00E+00	0.00E+00
Co-57	0.00E+00	1.15E-06	1.87E-06	0.00E+00	0.00E+00	0.00E+00	3.92E-06
Sr-85	0.00E+00	0.00E+00	0.00E+00	0.00E+00	0.00E+00	0.00E+00	0.00E+00
Y-88	0.00E+00	0.00E+00	0.00E+00	0.00E+00	0.00E+00	0.00E+00	0.00E+00
Nb-94	0.00E+00	0.00E+00	0.00E+00	0.00E+00	0.00E+00	0.00E+00	0.00E+00
Nb-97	0.00E+00	0.00E+00	0.00E+00	0.00E+00	0.00E+00	0.00E+00	0.00E+00
Cd-109	0.00E+00	0.00E+00	0.00E+00	0.00E+00	0.00E+00	0.00E+00	0.00E+00
Sn-113	0.00E+00	0.00E+00	0.00E+00	0.00E+00	0.00E+00	0.00E+00	0.00E+00
Ba-133	0.00E+00	0.00E+00	0.00E+00	0.00E+00	0.00E+00	0.00E+00	0.00E+00
Te-134	0.00E+00	0.00E+00	0.00E+00	0.00E+00	0.00E+00	0.00E+00	0.00E+00
Ce-139	0.00E+00	0.00E+00	0.00E+00	0.00E+00	0.00E+00	0.00E+00	0.00E+00
Hg-203	0.00E+00	0.00E+00	0.00E+00	0.00E+00	0.00E+00	0.00E+00	0.00E+00

TABLE 3-4

TOTAL BODY DOSE FACTORS

Ki

FROM NOBLE GASES (GAMMA)

NUCLIDE	Gamma TB*	X	(pCi/uCi)	X	FINITE CLOUD ** CORRECTION FACTOR	=	Ki***
Kr-83m	7.56E-08		1.00E+6		7.62E-01		5.76E-02
Kr-85m	1.17E-03		1.00E+6		6.22E-01		7.28E+02
Kr-85	1.61E-05		1.00E+6		5.31E-01		8.55E+00
Kr-87	5.92E-03		1.00E+6		4.21E-01		2.49E+03
Kr-88	1.47E-02		1.00E+6		3.90E-01		5.73E+03
Kr-89	1.66E-02		1.00E+6		4.13E-01		6.85E+03
Kr-90	1.56E-02		1.00E+6		4.49E-01		7.01E+03
Xe-131m	9.15E-05		1.00E+6		7.49E-01		6.86E+01
Xe-133m	2.51E-04		1.00E+6		7.10E-01		1.78E+02
Xe-133	2.94E-04		1.00E+6		7.62E-01		2.24E+02
Xe-135m	3.12E-03		1.00E+6		5.34E-01		1.67E+03
Xe-135	1.81E-03		1.00E+6		6.36E-01		1.15E+03
Xe-137	1.42E-03		1.00E+6		5.02E-01		7.13E+02
Xe-138	8.83E-03		1.00E+6		4.28E-01		3.78E+03
Ar-41	8.84E-03		1.00E+6		4.37E-01		3.86E+03

* From Regulatory Guide 1.109, Table B-1 (mrem/yr per pCi/m^3)

** The finite cloud correction factor is described in Section 3.6.

*** Ki (mrem/yr per uCi/m^3)

TABLE 3-5

SKIN DOSE FACTORS

Li

FROM NOBLE GASES (BETA)

NUCLIDE	Beta Skin*	X	(pCi/uCi)	=	Li**
Kr-83m	0.00E+00		1.00E+6		0.00E+00
Kr-85m	1.46E-03		1.00E+6		1.46E+03
Kr-85	1.34E-03		1.00E+6		1.34E+03
Kr-87	9.73E-03		1.00E+6		9.73E+03
Kr-88	2.37E-03		1.00E+6		2.37E+03
Kr-89	1.01E-02		1.00E+6		1.01E+04
Kr-90	7.29E-03		1.00E+6		7.29E+03
Xe-131m	4.76E-04		1.00E+6		4.76E+02
Xe-133m	9.94E-04		1.00E+6		9.94E+02
Xe-133	3.06E-04		1.00E+6		3.06E+02
Xe-135m	7.11E-04		1.00E+6		7.11E+02
Xe-135	1.86E-03		1.00E+6		1.86E+03
Xe-137	1.22E-02		1.00E+6		1.22E+04
Xe-138	4.13E-03		1.00E+6		4.13E+03
Ar-41	2.69E-03		1.00E+6		2.69E+03

* From Regulatory Guide 1.109, Table B-1 (mrem/yr per pCi/m^3)

** Li (mrem/yr per uCi/m^3)

TABLE 3-6

AIR DOSE FACTORS

Mi

FROM NOBLE GASES (GAMMA)

NUCLIDE	Gamma*	X	(pCi/uCi)	X	FINITE CLOUD ** CORRECTION FACTOR	=	Mi***
Kr-83m	1.93E-05		1.00E+6		7.62E-01		1.47E+01
Kr-85m	1.23E-03		1.00E+6		6.22E-01		7.65E+02
Kr-85	1.72E-05		1.00E+6		5.31E-01		9.13E+00
Kr-87	6.17E-03		1.00E+6		4.21E-01		2.60E+03
Kr-88	1.52E-02		1.00E+6		3.90E-01		5.93E+03
Kr-89	1.73E-02		1.00E+6		4.13E-01		7.14E+03
Kr-90	1.63E-02		1.00E+6		4.49E-01		7.33E+03
Xe-131m	1.56E-04		1.00E+6		7.49E-01		1.17E+02
Xe-133m	3.27E-04		1.00E+6		7.10E-01		2.32E+02
Xe-133	3.53E-04		1.00E+6		7.62E-01		2.69E+02
Xe-135m	3.36E-03		1.00E+6		5.34E-01		1.79E+03
Xe-135	1.92E-03		1.00E+6		6.36E-01		1.22E+03
Xe-137	1.51E-03		1.00E+6		5.02E-01		7.58E+02
Xe-138	9.21E-03		1.00E+6		4.28E-01		3.94E+03
Ar-41	9.30E-03		1.00E+6		4.37E-01		4.06E+03

* From Regulatory Guide 1.109, Table B-1 (mrad/yr per pCi/m^3)

** The finite cloud correction factor is described in Section 3.6.

*** Mi (mrad/yr per uCi/m^3)

TABLE 3-7

AIR DOSE FACTORS

Ni

FROM NOBLE GASES (BETA)

NUCLIDE	Beta*	X	(pCi/uCi)	=	Ni**
Kr-83m	2.88E-04		1.00E+6		2.88E+02
Kr-85m	1.97E-03		1.00E+6		1.97E+03
Kr-85	1.95E-03		1.00E+6		1.95E+03
Kr-87	1.03E-02		1.00E+6		1.03E+04
Kr-88	2.93E-03		1.00E+6		2.93E+03
Kr-89	1.06E-02		1.00E+6		1.06E+04
Kr-90	7.83E-03		1.00E+6		7.83E+03
Xe-131m	1.11E-03		1.00E+6		1.11E+03
Xe-133m	1.48E-03		1.00E+6		1.48E+03
Xe-133	1.05E-03		1.00E+6		1.05E+03
Xe-135m	7.39E-04		1.00E+6		7.39E+02
Xe-135	2.46E-03		1.00E+6		2.46E+03
Xe-137	1.27E-02		1.00E+6		1.27E+04
Xe-138	4.75E-03		1.00E+6		4.75E+03
Ar-41	3.28E-03		1.00E+6		3.28E+03

* From Regulatory Guide 1.109, Table B-1 (mrad/yr per pCi/m^3)

** Ni (mrad/yr per uCi/m^3)

TABLE 3-8

DOSE FACTORS FOR SITE BOUNDARY USING STANDARD ISOTOPIC MIXTURES

INSTANTANEOUS RELEASE MIXTURE

NUCLIDE	RELATIVE ABUNDANCE	WEIGHTED DOSE FACTORS
Kr 85m	5.56E-2	$\bar{K}$ = 1.49E+3 (mrem - m³ per μCi-yr)
Kr 87	5.70E-2	$\bar{L}$ = 1.42E+3 (mrem - m³ per μCi-yr)
Kr 88	11.95E-2	$\bar{M}$ = 1.58E+3 (mrad - m³ per μCi-yr)
Xe 133m	1.14E-2	$\bar{N}$ = 2.02E+3 (mrad - m³ per μCi-yr)
Xe 133	53.57E-2	
Xe 135m	12.01E-2	(SEE SECTION 3.3.1)
Xe 135	3.25E-2	
Ar 41	6.82E-2	

TIME AVERAGED RELEASE MIXTURE

NUCLIDE	RELATIVE ABUNDANCE	WEIGHTED DOSE FACTORS
Kr 85	5.33E-5	$\bar{K}$ = 4.11E2 (mrem - m³ per μCi-yr)
Kr 85m	1.63E-2	$\bar{L}$ = 6.25E2 (mrem - m³ per μCi-yr)
Xe 131m	4.72E-4	$\bar{M}$ = 4.61E2 (mrad - m³ per μCi-yr)
Xe 133	7.89E-1	$\bar{N}$ = 1.34E3 (mrad - m³ per μCi-yr)
Xe 133m	4.46E-4	
Xe 135	1.93E-1	

TABLE 3-8 BASES

Instantaneous Mix:

These dose factors are generated from the mixture that would be seen in the reactor coolant (undecayed) if the unit were operated with several leaking rods with exposed fuel. The mixture was chosen based upon review of pressurized reactor coolant samples taken during operation with varying fuel conditions (pct, exposed fuel, tramp only). This mixture provided the most restrictive mixture and is used to calculate a conservative instantaneous release rate in μCi/sec before an actual sample of the release is available (see Appendix 3A).

Time Averaged Release Mixture:

This mixture is the conservative time averaged release mixture taken from a review of three years of semi-annual effluent reports. This mixture was from the most restrictive release period (first quarter 1984) reviewed. These dose factors are used to determine representative time averaged release rates in curies/seconds.

TABLE 3-9

LOCATIONS OF SITE BOUNDARY AND NEAREST RESIDENCE

SECTOR	DISTANCE * NEAREST POINT OF SITE BOUNDARY (Meters)	DISTANCE* NEAREST RESIDENCE
N	RIVER	1950
NNW	RIVER	1740
NW	RIVER	1830
WNW	RIVER	1830
W	RIVER	1890
WSW	RIVER	2135
SW	350	2745
SSW	380	1525
S	580	1280
SSE	595	1220
SE	580	1100
ESE	580	1070
E	625	730
ENE	760	1370
NE	790	1525
NNE	RIVER	3050

* Measured from Indian Point No. 3.

Table 3-10a

ADULT INHALATION Ri(I) (mrem/yr per uCi/m^3)

Isotope	BONE	LIVER	TOT BODY	THYROID	KIDNEY	LUNG	GILLI
H-3	0.00E+00	1.26E+03	1.26E+03	1.26E+03	1.26E+03	1.26E+03	1.26E+03
Be-7	0.00E+00	0.00E+00	0.00E+00	0.00E+00	0.00E+00	0.00E+00	0.00E+00
Na-24	1.02E+04	1.02E+04	1.02E+04	1.02E+04	1.02E+04	1.02E+04	1.02E+04
P-32	1.32E+06	7.71E+04	5.01E+04	0.00E+00	0.00E+00	0.00E+00	8.64E+04
Cr-51	0.00E+00	0.00E+00	1.00E+02	5.95E+01	2.28E+01	1.44E+04	3.32E+03
Mn-54	0.00E+00	3.96E+04	6.30E+03	0.00E+00	9.84E+03	1.40E+06	7.74E+04
Mn-56	0.00E+00	1.24E+00	1.83E-01	0.00E+00	1.30E+00	9.44E+03	2.02E+04
Fe-55	2.46E+04	1.70E+04	3.94E+03	0.00E+00	0.00E+00	7.21E+04	6.03E+03
Fe-59	1.18E+04	2.78E+04	1.06E+04	0.00E+00	0.00E+00	1.02E+06	1.88E+05
Co-58	0.00E+00	1.58E+03	2.07E+03	0.00E+00	0.00E+00	9.28E+05	1.06E+05
Co-60	0.00E+00	1.15E+04	1.48E+04	0.00E+00	0.00E+00	5.97E+06	2.85E+05
Ni-63	4.32E+05	3.14E+04	1.45E+04	0.00E+00	0.00E+00	1.78E+05	1.34E+04
Ni-65	1.54E+00	2.10E-01	9.12E-02	0.00E+00	0.00E+00	5.60E+03	1.23E+04
Cu-64	0.00E+00	1.46E+00	6.15E-01	0.00E+00	4.62E+00	6.78E+03	4.90E+04
Zn-65	3.24E+04	1.03E+05	4.66E+04	0.00E+00	6.90E+04	8.64E+05	5.34E+04
Zn-69	3.38E-02	6.51E-02	4.52E-03	0.00E+00	4.22E-02	9.20E+02	1.63E+01
Br-83	0.00E+00	0.00E+00	2.41E+02	0.00E+00	0.00E+00	0.00E+00	2.32E+02
Br-84	0.00E+00	0.00E+00	3.13E+02	0.00E+00	0.00E+00	0.00E+00	1.64E-03
Br-85	0.00E+00	0.00E+00	1.28E+01	0.00E+00	0.00E+00	0.00E+00	0.00E+00
Rb-86	0.00E+00	1.35E+05	5.90E+04	0.00E+00	0.00E+00	0.00E+00	1.66E+04
Rb-88	0.00E+00	3.87E+02	1.93E+02	0.00E+00	0.00E+00	0.00E+00	3.34E-09
Rb-89	0.00E+00	2.56E+02	1.70E+02	0.00E+00	0.00E+00	0.00E+00	9.28E-12
Sr-89	3.04E+05	0.00E+00	8.72E+03	0.00E+00	0.00E+00	1.40E+06	3.50E+05
Sr-90	9.92E+07	0.00E+00	6.10E+06	0.00E+00	0.00E+00	9.60E+06	7.22E+05
Sr-91	6.19E+01	0.00E+00	2.50E+00	0.00E+00	0.00E+00	3.65E+04	1.91E+05
Sr-92	6.74E+00	0.00E+00	2.91E-01	0.00E+00	0.00E+00	1.65E+04	4.30E+04
Y-90	2.09E+03	0.00E+00	5.61E+01	0.00E+00	0.00E+00	1.70E+05	5.06E+05
Y-91m	2.61E-01	0.00E+00	1.02E-02	0.00E+00	0.00E+00	1.92E+03	1.33E+00
Y-91	4.62E+05	0.00E+00	1.24E+04	0.00E+00	0.00E+00	1.70E+06	3.85E+05
Y-92	1.03E+01	0.00E+00	3.02E-01	0.00E+00	0.00E+00	1.57E+04	7.35E+04
Y-93	9.44E+01	0.00E+00	2.61E+00	0.00E+00	0.00E+00	4.85E+04	4.22E+05
Zr-95	1.07E+05	3.44E+04	2.33E+04	0.00E+00	5.42E+04	1.77E+06	1.50E+05
Zr-97	9.68E+01	1.96E+01	9.04E+00	0.00E+00	2.97E+01	7.87E+04	5.23E+05
Nb-95	1.41E+04	7.82E+03	4.21E+03	0.00E+00	7.74E+03	5.05E+05	1.04E+05
Mo-99	0.00E+00	1.21E+02	2.30E+01	0.00E+00	2.91E+02	9.12E+04	2.48E+05
Tc-99m	1.03E-03	2.91E-03	3.70E-02	0.00E+00	4.42E-02	7.64E+02	4.16E+03
Tc-101	4.18E-05	6.02E-05	5.90E-04	0.00E+00	1.08E-03	3.99E+02	1.09E-11
Ru-103	1.53E+03	0.00E+00	6.58E+02	0.00E+00	5.83E+03	5.05E+05	1.10E+05
Ru-105	7.90E-01	0.00E+00	3.11E-01	0.00E+00	1.02E+00	1.10E+04	4.82E+04
Ru-106	6.91E+04	0.00E+00	8.72E+03	0.00E+00	1.34E+05	9.36E+06	9.12E+05
Ag-110m	1.08E+04	1.00E+04	5.94E+03	0.00E+00	1.97E+04	4.63E+06	3.02E+05
Sb-122	0.00E+00	0.00E+00	0.00E+00	0.00E+00	0.00E+00	0.00E+00	0.00E+00
Sb-124	3.12E+04	5.89E+02	1.24E+04	7.55E+01	0.00E+00	2.48E+06	4.06E+05
Sb-125	5.34E+04	5.95E+02	1.26E+04	5.40E+01	0.00E+00	1.74E+06	1.01E+05

Table 3-10a

ADULT INHALATION Ri(I) (mrem/yr per uCi/m^3)

Isotope	BONE	LIVER	TOT BODY	THYROID	KIDNEY	LUNG	GILLI
Te-125m	3.42E+03	1.58E+03	4.67E+02	1.05E+03	1.24E+04	3.14E+05	7.06E+04
Te-127m	1.26E+04	5.77E+03	1.57E+03	3.29E+03	4.58E+04	9.60E+05	1.50E+05
Te-127	1.40E+00	6.42E-01	3.10E-01	1.06E+00	5.10E+00	6.51E+03	5.74E+04
Te-129m	9.76E+03	4.67E+03	1.58E+03	3.44E+03	3.66E+04	1.16E+06	3.83E+05
Te-129	4.98E-02	2.39E-02	1.24E-02	3.90E-02	1.87E-01	1.94E+03	1.57E+02
Te-131m	6.99E+01	4.36E+01	2.90E+01	5.50E+01	3.09E+02	1.46E+05	5.56E+05
Te-131	1.11E-02	5.95E-03	3.59E-03	9.36E-03	4.37E-02	1.39E+03	1.84E+01
Te-132	2.60E+02	2.15E+02	1.62E+02	1.90E+02	1.46E+03	2.88E+05	5.10E+05
I-130	4.58E+03	1.34E+04	5.28E+03	1.14E+06	2.09E+04	0.00E+00	7.69E+03
I-131	2.52E+04	3.58E+04	2.05E+04	1.19E+07	6.13E+04	0.00E+00	6.28E+03
I-132	1.16E+03	3.26E+03	1.16E+03	1.14E+05	5.18E+03	0.00E+00	4.06E+02
I-133	8.64E+03	1.48E+04	4.52E+03	2.15E+06	2.58E+04	0.00E+00	8.88E+03
I-134	6.44E+02	1.73E+03	6.15E+02	2.98E+04	2.75E+03	0.00E+00	1.01E+00
I-135	2.68E+03	6.98E+03	2.57E+03	4.48E+05	1.11E+04	0.00E+00	5.25E+03
Cs-134	3.73E+05	8.48E+05	7.28E+05	0.00E+00	2.87E+05	9.76E+04	1.04E+04
Cs-136	3.90E+04	1.46E+05	1.10E+05	0.00E+00	8.56E+04	1.20E+04	1.17E+04
Cs-137	4.78E+05	6.21E+05	4.28E+05	0.00E+00	2.22E+05	7.52E+04	8.40E+03
Cs-138	3.31E+02	6.21E+02	3.24E+02	0.00E+00	4.80E+02	4.86E+01	1.86E-03
Ba-139	9.36E-01	6.66E-04	2.74E-02	0.00E+00	6.22E-04	3.76E+03	8.96E+02
Ba-140	3.90E+04	4.90E+01	2.57E+03	0.00E+00	1.67E+01	1.27E+06	2.18E+05
Ba-141	1.00E-01	7.53E-05	3.36E-03	0.00E+00	7.00E-05	1.94E+03	1.16E-07
Ba-142	2.63E-02	2.70E-05	1.66E-03	0.00E+00	2.29E-05	1.19E+03	1.57E-16
La-140	3.44E+02	1.74E+02	4.58E+01	0.00E+00	0.00E+00	1.36E+05	4.58E+05
La-142	6.83E-01	3.10E-01	7.72E-02	0.00E+00	0.00E+00	6.33E+03	2.11E+03
Ce-141	1.99E+04	1.35E+04	1.53E+03	0.00E+00	6.26E+03	3.62E+05	1.20E+05
Ce-143	1.86E+02	1.38E+02	1.53E+01	0.00E+00	6.08E+01	7.98E+04	2.26E+05
Ce-144	3.43E+06	1.43E+06	1.84E+05	0.00E+00	8.48E+05	7.78E+06	8.16E+05
Pr-143	9.36E+03	3.75E+03	4.64E+02	0.00E+00	2.16E+03	2.81E+05	2.00E+05
Pr-144	3.01E-02	1.25E-02	1.53E-03	0.00E+00	7.05E-03	1.02E+03	2.15E-08
Nd-147	5.27E+03	6.10E+03	3.65E+02	0.00E+00	3.56E+03	2.21E+05	1.73E+05
W-187	8.48E+00	7.08E+00	2.48E+00	0.00E+00	0.00E+00	2.90E+04	1.55E+05
Np-239	2.30E+02	2.26E+01	1.24E+01	0.00E+00	7.00E+01	3.76E+04	1.19E+05
K-40	0.00E+00	0.00E+00	0.00E+00	0.00E+00	0.00E+00	0.00E+00	0.00E+00
Co-57	0.00E+00	6.92E+02	6.71E+02	0.00E+00	0.00E+00	3.70E+05	3.14E+04
Sr-85	3.20E+04	0.00E+00	7.76E+05	0.00E+00	0.00E+00	4.80E+05	6.08E+04
Y-88	0.00E+00	0.00E+00	0.00E+00	0.00E+00	0.00E+00	0.00E+00	0.00E+00
Nb-94	0.00E+00	0.00E+00	0.00E+00	0.00E+00	0.00E+00	0.00E+00	0.00E+00
Nb-97	2.22E-01	5.62E-02	2.05E-02	0.00E+00	6.54E-02	2.40E+03	2.42E+02
Cd-109	0.00E+00	3.92E+05	1.28E+04	0.00E+00	3.76E+05	7.28E+05	6.56E+04
Sn-113	6.56E+04	2.16E+03	4.48E+03	1.36E+03	0.00E+00	9.60E+05	1.20E+04
Ba-133	7.60E+04	3.36E+03	2.00E+04	0.00E+00	1.68E+01	1.52E+06	8.00E+04
Te-134	3.07E-02	2.58E-02	1.26E-02	2.75E-02	1.74E-01	3.47E+03	2.38E-01
Ce-139	0.00E+00	0.00E+00	0.00E+00	0.00E+00	0.00E+00	0.00E+00	0.00E+00
Hg-203	0.00E+00	0.00E+00	0.00E+00	0.00E+00	0.00E+00	0.00E+00	0.00E+00

Table 3-10b

TEEN INHALATION Ri(I) (mrem/yr per uCi/m^3)

Isotope	BONE	LIVER	TOT BODY	THYROID	KIDNEY	LUNG	GILLI
H-3	0.00E+00	1.27E+03	1.27E+03	1.27E+03	1.27E+03	1.27E+03	1.27E+03
Be-7	0.00E+00	0.00E+00	0.00E+00	0.00E+00	0.00E+00	0.00E+00	0.00E+00
Na-24	1.38E+04	1.38E+04	1.38E+04	1.38E+04	1.38E+04	1.38E+04	1.38E+04
P-32	1.89E+06	1.10E+05	7.16E+04	0.00E+00	0.00E+00	0.00E+00	9.28E+04
Cr-51	0.00E+00	0.00E+00	1.35E+02	7.50E+01	3.07E+01	2.10E+04	3.00E+03
Mn-54	0.00E+00	5.11E+04	8.40E+03	0.00E+00	1.27E+04	1.98E+06	6.68E+04
Mn-56	0.00E+00	1.70E+00	2.52E-01	0.00E+00	1.79E+00	1.52E+04	5.74E+04
Fe-55	3.34E+04	2.38E+04	5.54E+03	0.00E+00	0.00E+00	1.24E+05	6.39E+03
Fe-59	1.59E+04	3.70E+04	1.43E+04	0.00E+00	0.00E+00	1.53E+06	1.78E+05
Co-58	0.00E+00	2.07E+03	2.78E+03	0.00E+00	0.00E+00	1.34E+06	9.52E+04
Co-60	0.00E+00	1.51E+04	1.98E+04	0.00E+00	0.00E+00	8.72E+06	2.59E+05
Ni-63	5.80E+05	4.34E+04	1.98E+04	0.00E+00	0.00E+00	3.07E+05	1.42E+04
Ni-65	2.18E+00	2.93E-01	1.27E-01	0.00E+00	0.00E+00	9.36E+03	3.67E+04
Cu-64	0.00E+00	2.03E+00	8.48E-01	0.00E+00	6.41E+00	1.11E+04	6.14E+04
Zn-65	3.86E+04	1.34E+05	6.24E+04	0.00E+00	8.64E+04	1.24E+06	4.66E+04
Zn-69	4.83E-02	9.20E-02	6.46E-03	0.00E+00	6.02E-02	1.58E+03	2.85E+02
Br-83	0.00E+00	0.00E+00	3.44E+02	0.00E+00	0.00E+00	0.00E+00	0.00E+00
Br-84	0.00E+00	0.00E+00	4.33E+02	0.00E+00	0.00E+00	0.00E+00	0.00E+00
Br-85	0.00E+00	0.00E+00	1.83E+01	0.00E+00	0.00E+00	0.00E+00	0.00E+00
Rb-86	0.00E+00	1.90E+05	8.40E+04	0.00E+00	0.00E+00	0.00E+00	1.77E+04
Rb-88	0.00E+00	5.46E+02	2.72E+02	0.00E+00	0.00E+00	0.00E+00	2.92E-05
Rb-89	0.00E+00	3.52E+02	2.33E+02	0.00E+00	0.00E+00	0.00E+00	3.38E-07
Sr-89	4.34E+05	0.00E+00	1.25E+04	0.00E+00	0.00E+00	2.42E+06	3.71E+05
Sr-90	1.08E+08	0.00E+00	6.68E+06	0.00E+00	0.00E+00	1.65E+07	7.65E+05
Sr-91	8.80E+01	0.00E+00	3.51E+00	0.00E+00	0.00E+00	6.07E+04	2.59E+05
Sr-92	9.52E+00	0.00E+00	4.06E-01	0.00E+00	0.00E+00	2.74E+04	1.19E+05
Y-90	2.98E+03	0.00E+00	8.00E+01	0.00E+00	0.00E+00	2.93E+05	5.59E+05
Y-91m	3.70E-01	0.00E+00	1.42E-02	0.00E+00	0.00E+00	3.20E+03	3.02E+01
Y-91	6.61E+05	0.00E+00	1.77E+04	0.00E+00	0.00E+00	2.94E+06	4.09E+05
Y-92	1.47E+01	0.00E+00	4.29E-01	0.00E+00	0.00E+00	2.68E+04	1.65E+05
Y-93	1.35E+02	0.00E+00	3.72E+00	0.00E+00	0.00E+00	8.32E+04	5.79E+05
Zr-95	1.46E+05	4.58E+04	3.15E+04	0.00E+00	6.74E+04	2.69E+06	1.49E+05
Zr-97	1.38E+02	2.72E+01	1.26E+01	0.00E+00	4.12E+01	1.30E+05	6.30E+05
Nb-95	1.86E+04	1.03E+04	5.66E+03	0.00E+00	1.00E+04	7.51E+05	9.68E+04
Mo-99	0.00E+00	1.69E+02	3.22E+01	0.00E+00	4.11E+02	1.54E+05	2.69E+05
Tc-99m	1.38E-03	3.86E-03	4.99E-02	0.00E+00	5.76E-02	1.15E+03	6.13E+03
Tc-101	5.92E-05	8.40E-05	8.24E-04	0.00E+00	1.52E-03	6.67E+02	8.72E-07
Ru-103	2.10E+03	0.00E+00	8.96E+02	0.00E+00	7.43E+03	7.83E+05	1.09E+05
Ru-105	1.12E+00	0.00E+00	4.34E-01	0.00E+00	1.41E+00	1.82E+04	9.04E+04
Ru-106	9.84E+04	0.00E+00	1.24E+04	0.00E+00	1.90E+05	1.61E+07	9.60E+05
Ag-110m	1.38E+04	1.31E+04	7.99E+03	0.00E+00	2.50E+04	6.75E+06	2.73E+05
Sb-122	0.00E+00	0.00E+00	0.00E+00	0.00E+00	0.00E+00	0.00E+00	0.00E+00
Sb-124	4.30E+04	7.94E+02	1.68E+04	9.76E+01	0.00E+00	3.85E+06	3.98E+05
Sb-125	7.38E+04	8.08E+02	1.72E+04	7.04E+01	0.00E+00	2.74E+06	9.92E+04

Table 3-10b

TEEN INHALATION Ri(I) (mrem/yr per uCi/m^3)

Isotope	BONE	LIVER	TOT BODY	THYROID	KIDNEY	LUNG	GILLI
Te-125m	4.88E+03	2.24E+03	6.67E+02	1.40E+03	0.00E+00	5.36E+05	7.50E+04
Te-127m	1.80E+04	8.16E+03	2.18E+03	4.38E+03	6.54E+04	1.66E+06	1.59E+05
Te-127	2.01E+00	9.12E-01	4.42E-01	1.42E+00	7.28E+00	1.12E+04	8.08E+04
Te-129m	1.39E+04	6.58E+03	2.25E+03	4.58E+03	5.19E+04	1.98E+06	4.05E+05
Te-129	7.10E-02	3.38E-02	1.76E-02	5.18E-02	2.66E-01	3.30E+03	1.62E+03
Te-131m	9.84E+01	6.01E+01	4.02E+01	7.25E+01	4.39E+02	2.38E+05	6.21E+05
Te-131	1.58E-02	8.32E-03	5.04E-03	1.24E-02	6.18E-02	2.34E+03	1.51E+01
Te-132	3.60E+02	2.90E+02	2.19E+02	2.46E+02	1.95E+03	4.49E+05	4.63E+05
I-130	6.24E+03	1.79E+04	7.17E+03	1.49E+06	2.75E+04	0.00E+00	9.12E+03
I-131	3.54E+04	4.91E+04	2.64E+04	1.46E+07	8.40E+04	0.00E+00	6.49E+03
I-132	1.59E+03	4.38E+03	1.58E+03	1.51E+05	6.92E+03	0.00E+00	1.27E+03
I-133	1.22E+04	2.05E+04	6.22E+03	2.92E+06	3.59E+04	0.00E+00	1.03E+04
I-134	8.88E+02	2.32E+03	8.40E+02	3.95E+04	3.66E+03	0.00E+00	2.04E+01
I-135	3.70E+03	9.44E+03	3.49E+03	6.21E+05	1.49E+04	0.00E+00	6.95E+03
Cs-134	5.02E+05	1.13E+06	5.49E+05	0.00E+00	3.75E+05	1.46E+05	9.76E+03
Cs-136	5.15E+04	1.94E+05	1.37E+05	0.00E+00	1.10E+05	1.78E+04	1.09E+04
Cs-137	6.70E+05	8.48E+05	3.11E+05	0.00E+00	3.04E+05	1.21E+05	8.48E+03
Cs-138	4.66E+02	8.56E+02	4.46E+02	0.00E+00	6.62E+02	7.87E+01	2.70E-01
Ba-139	1.34E+00	9.44E-04	3.90E-02	0.00E+00	8.88E-04	6.46E+03	6.45E+03
Ba-140	5.47E+04	6.70E+01	3.52E+03	0.00E+00	2.28E+01	2.03E+06	2.29E+05
Ba-141	1.42E-01	1.06E-04	4.74E-03	0.00E+00	9.84E-05	3.29E+03	7.46E-04
Ba-142	3.70E-02	3.70E-05	2.27E-03	0.00E+00	3.14E-05	1.91E+03	4.79E-10
La-140	4.79E+02	2.36E+02	6.26E+01	0.00E+00	0.00E+00	2.14E+05	4.87E+05
La-142	9.60E-01	4.25E-01	1.06E-01	0.00E+00	0.00E+00	1.02E+04	1.20E+04
Ce-141	2.84E+04	1.90E+04	2.17E+03	0.00E+00	8.88E+03	6.14E+05	1.26E+05
Ce-143	2.66E+02	1.94E+02	2.16E+01	0.00E+00	8.64E+01	1.30E+05	2.55E+05
Ce-144	4.89E+06	2.02E+06	2.62E+05	0.00E+00	1.21E+06	1.34E+07	8.64E+05
Pr-143	1.34E+04	5.31E+03	6.62E+02	0.00E+00	3.09E+03	4.83E+05	2.14E+05
Pr-144	4.30E-02	1.76E-02	2.18E-03	0.00E+00	1.01E-02	1.75E+03	2.35E-04
Nd-147	7.86E+03	8.56E+03	5.13E+02	0.00E+00	5.02E+03	3.72E+05	1.82E+05
W-187	1.20E+01	9.76E+00	3.43E+00	0.00E+00	0.00E+00	4.74E+04	1.77E+05
Np-239	3.38E+02	3.19E+01	1.77E+01	0.00E+00	1.00E+02	6.49E+04	1.32E+05
K-40	0.00E+00	0.00E+00	0.00E+00	0.00E+00	0.00E+00	0.00E+00	0.00E+00
Co-57	0.00E+00	9.44E+02	9.20E+02	0.00E+00	0.00E+00	5.86E+05	3.14E+04
Sr-85	4.00E+04	0.00E+00	1.04E+04	0.00E+00	0.00E+00	7.04E+05	5.52E+04
Y-88	0.00E+00	0.00E+00	0.00E+00	0.00E+00	0.00E+00	0.00E+00	0.00E+00
Nb-94	0.00E+00	0.00E+00	0.00E+00	0.00E+00	0.00E+00	0.00E+00	0.00E+00
Nb-97	3.14E-01	7.78E-02	2.84E-02	0.00E+00	9.12E-02	3.93E+03	2.17E+03
Cd-109	0.00E+00	8.00E+05	2.72E+04	0.00E+00	5.36E+05	1.28E+06	6.88E+04
Sn-113	1.20E+05	3.76E+03	7.76E+03	2.32E+03	0.00E+00	1.60E+06	1.20E+04
Ba-133	3.76E+05	6.40E+03	2.64E+04	0.00E+00	2.24E+01	2.32E+06	7.76E+04
Te-134	4.25E-02	3.48E-02	2.91E-02	3.57E-02	2.33E-01	5.40E+03	1.10E+01
Ce-139	0.00E+00	0.00E+00	0.00E+00	0.00E+00	0.00E+00	0.00E+00	0.00E+00
Hg-203	0.00E+00	0.00E+00	0.00E+00	0.00E+00	0.00E+00	0.00E+00	0.00E+00

Table 3-10c

CHILD INHALATION Ri(I) (mrem/yr per uCi/m^3)

Isotope	BONE	LIVER	TOT BODY	THYROID	KIDNEY	LUNG	GILLI
H-3	0.00E+00	1.12E+03	1.12E+03	1.12E+03	1.12E+03	1.12E+03	1.12E+03
Be-7	0.00E+00	0.00E+00	0.00E+00	0.00E+00	0.00E+00	0.00E+00	0.00E+00
Na-24	1.61E+04	1.61E+04	1.61E+04	1.61E+04	1.61E+04	1.61E+04	1.61E+04
P-32	2.60E+06	1.14E+05	9.88E+04	0.00E+00	0.00E+00	0.00E+00	4.22E+04
Cr-51	0.00E+00	0.00E+00	1.54E+02	8.55E+01	2.43E+01	1.70E+04	1.08E+03
Mn-54	0.00E+00	4.29E+04	9.51E+03	0.00E+00	1.00E+04	1.58E+06	2.29E+04
Mn-56	0.00E+00	1.66E+00	3.12E-01	0.00E+00	1.67E+00	1.31E+04	1.23E+05
Fe-55	4.74E+04	2.52E+04	7.77E+03	0.00E+00	0.00E+00	1.11E+05	2.87E+03
Fe-59	2.07E+04	3.34E+04	1.67E+04	0.00E+00	0.00E+00	1.27E+06	7.07E+04
Co-58	0.00E+00	1.77E+03	3.16E+03	0.00E+00	0.00E+00	1.11E+06	3.44E+04
Co-60	0.00E+00	1.31E+04	2.26E+04	0.00E+00	0.00E+00	7.07E+06	9.62E+04
Ni-63	8.21E+05	4.63E+04	2.80E+04	0.00E+00	0.00E+00	2.75E+05	6.33E+03
Ni-65	2.99E+00	2.96E-01	1.64E-01	0.00E+00	0.00E+00	8.18E+03	8.40E+04
Cu-64	0.00E+00	1.99E+00	1.07E+00	0.00E+00	6.03E+00	9.58E+03	3.67E+04
Zn-65	4.26E+04	1.13E+05	7.03E+04	0.00E+00	7.14E+04	9.95E+05	1.63E+04
Zn-69	6.70E-02	9.66E-02	8.92E-03	0.00E+00	5.85E-02	1.42E+03	1.02E+04
Br-83	0.00E+00	0.00E+00	4.74E+02	0.00E+00	0.00E+00	0.00E+00	0.00E+00
Br-84	0.00E+00	0.00E+00	5.48E+02	0.00E+00	0.00E+00	0.00E+00	0.00E+00
Br-85	0.00E+00	0.00E+00	2.53E+01	0.00E+00	0.00E+00	0.00E+00	0.00E+00
Rb-86	0.00E+00	1.98E+05	1.14E+05	0.00E+00	0.00E+00	0.00E+00	7.99E+03
Rb-88	0.00E+00	5.62E+02	3.66E+02	0.00E+00	0.00E+00	0.00E+00	1.72E+01
Rb-89	0.00E+00	3.45E+02	2.90E+02	0.00E+00	0.00E+00	0.00E+00	1.89E+00
Sr-89	5.99E+05	0.00E+00	1.72E+04	0.00E+00	0.00E+00	2.16E+06	1.67E+05
Sr-90	1.01E+08	0.00E+00	6.44E+06	0.00E+00	0.00E+00	1.48E+07	3.43E+05
Sr-91	1.21E+02	0.00E+00	4.59E+00	0.00E+00	0.00E+00	5.33E+04	1.74E+05
Sr-92	1.31E+01	0.00E+00	5.25E-01	0.00E+00	0.00E+00	2.40E+04	2.42E+05
Y-90	4.11E+03	0.00E+00	1.11E+02	0.00E+00	0.00E+00	2.62E+05	2.68E+05
Y-91m	5.07E-01	0.00E+00	1.84E-02	0.00E+00	0.00E+00	2.81E+03	1.72E+03
Y-91	9.14E+05	0.00E+00	2.44E+04	0.00E+00	0.00E+00	2.63E+06	1.84E+05
Y-92	2.04E+01	0.00E+00	5.81E-01	0.00E+00	0.00E+00	2.39E+04	2.39E+05
Y-93	1.86E+02	0.00E+00	5.11E+00	0.00E+00	0.00E+00	7.44E+04	3.89E+05
Zr-95	1.90E+05	4.18E+04	3.70E+04	0.00E+00	5.96E+04	2.23E+06	6.11E+04
Zr-97	1.88E+02	2.72E+01	1.60E+01	0.00E+00	3.88E+01	1.13E+05	3.51E+05
Nb-95	2.35E+04	9.18E+03	6.55E+03	0.00E+00	8.62E+03	6.14E+05	3.70E+04
Mo-99	0.00E+00	1.72E+02	4.25E+01	0.00E+00	3.92E+02	1.35E+05	1.27E+05
Tc-99m	1.78E-03	3.48E-03	5.77E-02	0.00E+00	5.07E-02	9.51E+02	4.81E+03
Tc-101	8.10E-05	8.51E-05	1.08E-03	0.00E+00	1.45E-03	5.85E+02	1.63E+01
Ru-103	2.79E+03	0.00E+00	1.07E+03	0.00E+00	7.03E+03	6.62E+05	4.48E+04
Ru-105	1.53E+00	0.00E+00	5.55E-01	0.00E+00	1.34E+00	1.59E+04	9.95E+04
Ru-106	1.36E+05	0.00E+00	1.69E+04	0.00E+00	1.84E+05	1.43E+07	4.29E+05
Ag-110m	1.69E+04	1.14E+04	9.14E+03	0.00E+00	2.12E+04	5.48E+06	1.00E+05
Sb-122	0.00E+00	0.00E+00	0.00E+00	0.00E+00	0.00E+00	0.00E+00	0.00E+00
Sb-124	5.74E+04	7.40E+02	2.00E+04	1.26E+02	0.00E+00	3.24E+06	1.64E+05
Sb-125	9.84E+04	7.59E+02	2.07E+04	9.10E+01	0.00E+00	2.32E+06	4.03E+04

Table 3-10c

CHILD INHALATION Ri(I) (mrem/yr per uCi/m^3)

Isotope	BONE	LIVER	TOT BODY	THYROID	KIDNEY	LUNG	GILLI
Te-125m	6.73E+03	2.33E+03	9.14E+02	1.92E+03	0.00E+00	4.77E+05	3.38E+04
Te-127m	2.49E+04	8.55E+03	3.02E+03	6.07E+03	6.36E+04	1.48E+06	7.14E+04
Te-127	2.77E+00	9.51E-01	6.10E-01	1.96E+00	7.07E+00	1.00E+04	5.62E+04
Te-129m	1.92E+04	6.85E+03	3.04E+03	6.33E+03	5.03E+04	1.76E+06	1.82E+05
Te-129	9.77E-02	3.50E-02	2.38E-02	7.14E-02	2.57E-01	2.93E+03	2.55E+04
Te-131m	1.34E+02	5.92E+01	5.07E+01	9.77E+01	4.00E+02	2.06E+05	3.08E+05
Te-131	2.17E-02	8.44E-03	6.59E-03	1.70E-02	5.88E-02	2.05E+03	1.33E+03
Te-132	4.81E+02	2.72E+02	2.63E+02	3.17E+02	1.77E+03	3.77E+05	1.38E+05
I-130	8.18E+03	1.64E+04	8.44E+03	1.85E+06	2.45E+04	0.00E+00	5.11E+03
I-131	4.81E+04	4.81E+04	2.73E+04	1.62E+07	7.88E+04	0.00E+00	2.84E+03
I-132	2.12E+03	4.07E+03	1.88E+03	1.94E+05	6.25E+03	0.00E+00	3.20E+03
I-133	1.66E+04	2.03E+04	7.70E+03	3.85E+06	3.38E+04	0.00E+00	5.48E+03
I-134	1.17E+03	2.16E+03	9.95E+02	5.07E+04	3.30E+03	0.00E+00	9.55E+02
I-135	4.92E+03	8.73E+03	4.14E+03	7.92E+05	1.34E+04	0.00E+00	4.44E+03
Cs-134	6.51E+05	1.01E+06	2.25E+05	0.00E+00	3.30E+05	1.21E+05	3.85E+03
Cs-136	6.51E+04	1.71E+05	1.16E+05	0.00E+00	9.55E+04	1.45E+04	4.18E+03
Cs-137	9.07E+05	8.25E+05	1.28E+05	0.00E+00	2.82E+05	1.04E+05	3.62E+03
Cs-138	6.33E+02	8.40E+02	5.55E+02	0.00E+00	6.22E+02	6.81E+01	2.70E+02
Ba-139	1.84E+00	9.84E-04	5.36E-02	0.00E+00	8.62E-04	5.77E+03	5.77E+04
Ba-140	7.40E+04	6.48E+01	4.33E+03	0.00E+00	2.11E+01	1.74E+06	1.02E+05
Ba-141	1.96E-01	1.09E-04	6.36E-03	0.00E+00	9.47E-05	2.92E+03	2.75E+02
Ba-142	4.99E-02	3.60E-05	2.79E-03	0.00E+00	2.91E-05	1.64E+03	2.74E+00
La-140	6.44E+02	2.25E+02	7.55E+01	0.00E+00	0.00E+00	1.83E+05	2.26E+05
La-142	1.29E+00	4.11E-01	1.29E-01	0.00E+00	0.00E+00	8.70E+03	7.59E+04
Ce-141	3.92E+04	1.95E+04	2.90E+03	0.00E+00	8.55E+03	5.44E+05	5.66E+04
Ce-143	3.66E+02	1.99E+02	2.87E+01	0.00E+00	8.36E+01	1.15E+05	1.27E+05
Ce-144	6.77E+06	2.12E+06	3.61E+05	0.00E+00	1.17E+06	1.20E+07	3.89E+05
Pr-143	1.85E+04	5.55E+03	9.14E+02	0.00E+00	3.00E+03	4.33E+05	9.73E+04
Pr-144	5.96E-02	1.85E-02	3.00E-03	0.00E+00	9.77E-03	1.57E+03	1.97E+02
Nd-147	1.08E+04	8.73E+03	6.81E+02	0.00E+00	4.81E+03	3.28E+05	8.21E+04
W-187	1.63E+01	9.66E+00	4.33E+00	0.00E+00	0.00E+00	4.11E+04	9.10E+04
Np-239	4.66E+02	3.34E+01	2.35E+01	0.00E+00	9.73E+01	5.81E+04	6.40E+04
K-40	0.00E+00	0.00E+00	0.00E+00	0.00E+00	0.00E+00	0.00E+00	0.00E+00
Co-57	0.00E+00	9.03E+02	1.07E+03	0.00E+00	0.00E+00	5.07E+05	1.32E+04
Sr-85	4.44E+04	0.00E+00	1.18E+04	0.00E+00	0.00E+00	5.55E+05	2.04E+04
Y-88	0.00E+00	0.00E+00	0.00E+00	0.00E+00	0.00E+00	0.00E+00	0.00E+00
Nb-94	0.00E+00	0.00E+00	0.00E+00	0.00E+00	0.00E+00	0.00E+00	0.00E+00
Nb-97	4.29E-01	7.70E-02	3.60E-02	0.00E+00	8.55E-02	3.42E+03	2.78E+04
Cd-109	0.00E+00	7.03E+05	2.96E+04	0.00E+00	6.29E+05	1.11E+06	3.00E+04
Sn-113	1.41E+05	3.29E+03	8.51E+03	2.63E+03	0.00E+00	1.33E+06	4.81E+03
Ba-133	4.07E+05	4.07E+03	3.70E+04	0.00E+00	2.00E+01	1.92E+06	3.07E+04
Te-134	5.66E-02	3.26E-02	3.48E-02	4.59E-02	2.11E-01	4.55E+03	1.80E+03
Ce-139	0.00E+00	0.00E+00	0.00E+00	0.00E+00	0.00E+00	0.00E+00	0.00E+00
Hg-203	0.00E+00	0.00E+00	0.00E+00	0.00E+00	0.00E+00	0.00E+00	0.00E+00

Table 3-10d

INFANT INHALATION Ri(I) (mrem/yr per uCi/m^3)

Isotope	BONE	LIVER	TOT BODY	THYROID	KIDNEY	LUNG	GILLI
H-3	0.00E+00	6.47E+02	6.47E+02	6.47E+02	6.47E+02	6.47E+02	6.47E+02
Be-7	0.00E+00	0.00E+00	0.00E+00	0.00E+00	0.00E+00	0.00E+00	0.00E+00
Na-24	1.06E+04	1.06E+04	1.06E+04	1.06E+04	1.06E+04	1.06E+04	1.06E+04
P-32	2.03E+06	1.12E+05	7.74E+04	0.00E+00	0.00E+00	0.00E+00	1.61E+04
Cr-51	0.00E+00	0.00E+00	8.95E+01	5.75E+01	1.32E+01	1.28E+04	3.57E+02
Mn-54	0.00E+00	2.53E+04	4.98E+03	0.00E+00	4.98E+03	1.00E+06	7.06E+03
Mn-56	0.00E+00	1.54E+00	2.21E-01	0.00E+00	1.10E+00	1.25E+04	7.17E+04
Fe-55	1.97E+04	1.17E+04	3.33E+03	0.00E+00	0.00E+00	8.69E+04	1.09E+03
Fe-59	1.36E+04	2.25E+04	9.48E+03	0.00E+00	0.00E+00	1.02E+06	2.48E+04
Co-58	0.00E+00	1.22E+03	1.82E+03	0.00E+00	0.00E+00	7.77E+05	1.11E+04
Co-60	0.00E+00	8.02E+03	1.18E+04	0.00E+00	0.00E+00	4.51E+06	3.19E+04
Ni-63	3.39E+05	2.04E+04	1.16E+04	0.00E+00	0.00E+00	2.09E+05	2.42E+03
Ni-65	2.39E+00	2.84E-01	1.23E-01	0.00E+00	0.00E+00	8.12E+03	5.01E+04
Cu-64	0.00E+00	1.88E+00	7.74E-01	0.00E+00	3.98E+00	9.30E+03	1.50E+04
Zn-65	1.93E+04	6.26E+04	3.11E+04	0.00E+00	3.25E+04	6.47E+05	5.14E+04
Zn-69	5.39E-02	9.67E-02	7.18E-03	0.00E+00	4.02E-02	1.47E+03	1.32E+04
Br-83	0.00E+00	0.00E+00	3.81E+02	0.00E+00	0.00E+00	0.00E+00	0.00E+00
Br-84	0.00E+00	0.00E+00	4.00E+02	0.00E+00	0.00E+00	0.00E+00	0.00E+00
Br-85	0.00E+00	0.00E+00	2.04E+01	0.00E+00	0.00E+00	0.00E+00	0.00E+00
Rb-86	0.00E+00	1.90E+05	8.82E+04	0.00E+00	0.00E+00	0.00E+00	3.04E+03
Rb-88	0.00E+00	5.57E+02	2.87E+02	0.00E+00	0.00E+00	0.00E+00	3.39E+02
Rb-89	0.00E+00	3.21E+02	2.06E+02	0.00E+00	0.00E+00	0.00E+00	6.82E+01
Sr-89	3.98E+05	0.00E+00	1.14E+04	0.00E+00	0.00E+00	2.03E+06	6.40E+04
Sr-90	4.09E+07	0.00E+00	2.59E+06	0.00E+00	0.00E+00	1.12E+07	1.31E+05
Sr-91	9.56E+01	0.00E+00	3.46E+00	0.00E+00	0.00E+00	5.26E+04	7.34E+04
Sr-92	1.05E+01	0.00E+00	3.91E-01	0.00E+00	0.00E+00	2.38E+04	1.40E+05
Y-90	3.29E+03	0.00E+00	8.82E+01	0.00E+00	0.00E+00	2.69E+05	1.04E+05
Y-91m	4.07E-01	0.00E+00	1.39E-02	0.00E+00	0.00E+00	2.79E+03	2.35E+03
Y-91	5.88E+05	0.00E+00	1.57E+04	0.00E+00	0.00E+00	2.45E+06	7.03E+04
Y-92	1.64E+01	0.00E+00	4.61E-01	0.00E+00	0.00E+00	2.45E+04	1.27E+05
Y-93	1.50E+02	0.00E+00	4.07E+00	0.00E+00	0.00E+00	7.64E+04	1.67E+05
Zr-95	1.15E+05	2.79E+04	2.03E+04	0.00E+00	3.11E+04	1.75E+06	2.17E+04
Zr-97	1.50E+02	2.56E+01	1.17E+01	0.00E+00	2.59E+01	1.10E+05	1.40E+05
Nb-95	1.57E+04	6.43E+03	3.78E+03	0.00E+00	4.72E+03	4.79E+05	1.27E+04
Mo-99	0.00E+00	1.65E+02	3.23E+01	0.00E+00	2.65E+02	1.35E+05	4.87E+04
Tc-99m	1.40E-03	2.88E-03	3.72E-02	0.00E+00	3.11E-02	8.11E+02	2.03E+03
Tc-101	6.51E-05	8.23E-05	8.12E-04	0.00E+00	9.79E-04	5.84E+02	8.44E+02
Ru-103	2.02E+03	0.00E+00	6.79E+02	0.00E+00	4.24E+03	5.52E+05	1.61E+04
Ru-105	1.22E+00	0.00E+00	4.10E-01	0.00E+00	8.99E-01	1.57E+04	4.84E+04
Ru-106	8.68E+04	0.00E+00	1.09E+04	0.00E+00	1.07E+05	1.16E+07	1.64E+05
Ag-110m	9.98E+03	7.22E+03	5.00E+03	0.00E+00	1.09E+04	3.67E+06	3.30E+04
Sb-122	0.00E+00	0.00E+00	0.00E+00	0.00E+00	0.00E+00	0.00E+00	0.00E+00
Sb-124	3.79E+04	5.56E+02	1.20E+04	1.01E+02	0.00E+00	2.65E+06	5.91E+04
Sb-125	5.17E+04	4.77E+02	1.09E+04	6.23E+01	0.00E+00	1.64E+06	1.47E+04

Table 3-10d

INFANT INHALATION Ri(I) (mrem/yr per uCi/m^3)

Isotope	BONE	LIVER	TOT BODY	THYROID	KIDNEY	LUNG	GILLI
Te-125m	4.76E+03	1.99E+03	6.58E+02	1.62E+03	0.00E+00	4.47E+05	1.29E+04
Te-127m	1.67E+04	6.90E+03	2.07E+03	4.87E+03	3.75E+04	1.31E+06	2.73E+04
Te-127	2.23E+04	9.53E-01	4.89E-01	1.85E+00	4.86E+00	1.03E+04	2.44E+04
Te-129m	1.41E+04	6.09E+03	2.23E+03	5.47E+03	3.18E+04	1.68E+06	6.90E+04
Te-129	7.88E-02	3.47E-02	1.88E-02	6.75E-02	1.75E-01	3.00E+03	2.63E+04
Te-131m	1.07E+02	5.50E+01	3.63E+01	8.93E+01	2.65E+02	1.99E+05	1.19E+05
Te-131	1.74E-02	8.22E-03	5.00E-03	1.58E-02	3.99E-02	2.06E+03	8.22E+03
Te-132	3.72E+02	2.37E+02	1.76E+02	2.79E+02	1.03E+03	3.40E+05	4.41E+04
I-130	6.36E+03	1.39E+04	5.57E+03	1.60E+06	1.53E+04	0.00E+00	1.99E+03
I-131	3.79E+04	4.44E+04	1.96E+04	1.48E+07	5.18E+04	0.00E+00	1.06E+03
I-132	1.69E+03	3.54E+03	1.26E+03	1.69E+05	3.95E+03	0.00E+00	1.90E+03
I-133	1.32E+04	1.92E+04	5.60E+03	3.56E+06	2.24E+04	0.00E+00	2.16E+03
I-134	9.21E+02	1.88E+03	6.65E+02	4.45E+04	2.09E+03	0.00E+00	1.29E+03
I-135	3.86E+03	7.60E+03	2.77E+03	6.96E+05	8.47E+03	0.00E+00	1.83E+03
Cs-134	3.96E+05	7.03E+05	7.45E+04	0.00E+00	1.90E+05	7.97E+04	1.33E+03
Cs-136	4.83E+04	1.35E+05	5.29E+04	0.00E+00	5.64E+04	1.18E+04	1.43E+03
Cs-137	5.49E+05	6.12E+05	4.55E+04	0.00E+00	1.72E+05	7.13E+04	1.33E+03
Cs-138	5.05E+02	7.81E+02	3.98E+02	0.00E+00	4.10E+02	6.54E+01	8.76E+02
Ba-139	1.48E+00	9.84E-04	4.30E-02	0.00E+00	5.92E-04	5.95E+03	5.10E+04
Ba-140	5.60E+04	5.60E+01	2.90E+03	0.00E+00	1.34E+01	1.60E+06	3.84E+04
Ba-141	1.57E-01	1.08E-04	4.97E-03	0.00E+00	6.50E-05	2.97E+03	4.75E+03
Ba-142	3.98E-02	3.30E-05	1.96E-03	0.00E+00	1.90E-05	1.55E+03	6.93E+02
La-140	5.05E+02	2.00E+02	5.15E+01	0.00E+00	0.00E+00	1.68E+05	8.48E+04
La-142	1.03E+00	3.77E-01	9.04E-02	0.00E+00	0.00E+00	8.22E+03	5.95E+04
Ce-141	2.77E+04	1.67E+04	1.99E+03	0.00E+00	5.25E+03	5.17E+05	2.16E+04
Ce-143	2.93E+02	1.93E+02	2.21E+01	0.00E+00	5.64E+01	1.16E+05	4.97E+04
Ce-144	3.19E+06	1.21E+06	1.76E+05	0.00E+00	5.38E+05	9.84E+06	1.48E+05
Pr-143	1.40E+04	5.24E+03	6.99E+02	0.00E+00	1.97E+03	4.33E+05	3.72E+04
Pr-144	4.79E-02	1.85E-02	2.41E-03	0.00E+00	6.72E-03	1.61E+03	4.28E+03
Nd-147	7.94E+03	8.13E+03	5.00E+02	0.00E+00	3.15E+03	3.22E+05	3.12E+04
W-187	1.30E+01	9.02E+00	3.12E+00	0.00E+00	0.00E+00	3.96E+04	3.56E+04
Np-239	3.71E+02	3.32E+01	1.88E+01	0.00E+00	6.62E+01	5.95E+04	2.49E+04
K-40	0.00E+00	0.00E+00	0.00E+00	0.00E+00	0.00E+00	0.00E+00	0.00E+00
Co-57	0.00E+00	6.51E+02	6.41E+02	0.00E+00	0.00E+00	3.79E+05	4.86E+03
Sr-85	3.78E+04	0.00E+00	7.56E+03	0.00E+00	0.00E+00	4.20E+05	6.72E+03
Y-88	0.00E+00	0.00E+00	0.00E+00	0.00E+00	0.00E+00	0.00E+00	0.00E+00
Nb-94	0.00E+00	0.00E+00	0.00E+00	0.00E+00	0.00E+00	0.00E+00	0.00E+00
Nb-97	3.42E-01	7.29E-02	2.63E-02	0.00E+00	5.70E-02	3.32E+03	2.69E+04
Cd-109	0.00E+00	3.64E+05	1.40E+04	0.00E+00	2.80E+05	8.68E+05	1.12E+04
Sn-113	8.40E+04	2.24E+03	5.04E+03	1.82E+03	0.00E+00	1.09E+06	1.68E+03
Ba-133	2.66E+05	2.38E+03	1.82E+04	0.00E+00	1.25E+01	1.27E+06	1.08E+04
Te-134	4.45E-02	2.86E-02	2.35E-02	4.07E-02	1.34E-01	4.10E+03	3.54E+03
Ce-139	0.00E+00	0.00E+00	0.00E+00	0.00E+00	0.00E+00	0.00E+00	0.00E+00
Hg-203	0.00E+00	0.00E+00	0.00E+00	0.00E+00	0.00E+00	0.00E+00	0.00E+00

Table 3-11a

ADULT INGESTION (Leafy Vegetable) Ri(V)

m^2 * mrem/yr per uCi/sec (H-3: mrem/yr per uCi/m^3)

Isotope	BONE	LIVER	TOT BODY	THYROID	KIDNEY	LUNG	GILLI
H-3	0.00E+00	2.26E+03	2.26E+03	2.26E+03	2.26E+03	2.26E+03	2.26E+03
Be-7	9.36E+04	2.11E+05	1.05E+05	0.00E+00	2.22E+05	0.00E+00	3.65E+07
Na-24	2.69E+05	2.69E+05	2.69E+05	2.69E+05	2.69E+05	2.69E+05	2.69E+05
P-32	1.40E+09	8.73E+07	5.43E+07	0.00E+00	0.00E+00	0.00E+00	1.58E+08
Cr-51	0.00E+00	0.00E+00	4.64E+04	2.78E+04	1.02E+04	6.16E+04	1.17E+07
Mn-54	0.00E+00	3.13E+08	5.97E+07	0.00E+00	9.31E+07	0.00E+00	9.58E+08
Mn-56	0.00E+00	1.59E+01	2.82E+00	0.00E+00	2.02E+01	0.00E+00	5.07E+02
Fe-55	2.10E+08	1.45E+08	3.38E+07	0.00E+00	0.00E+00	8.08E+07	8.31E+07
Fe-59	1.26E+08	2.96E+08	1.13E+08	0.00E+00	0.00E+00	8.27E+07	9.86E+08
Co-58	0.00E+00	3.07E+07	6.89E+07	0.00E+00	0.00E+00	0.00E+00	6.23E+08
Co-60	0.00E+00	1.67E+08	3.69E+08	0.00E+00	0.00E+00	0.00E+00	3.14E+09
Ni-63	1.04E+10	7.21E+08	3.49E+08	0.00E+00	0.00E+00	0.00E+00	1.50E+08
Ni-65	6.15E+01	7.99E+00	3.64E+00	0.00E+00	0.00E+00	0.00E+00	2.03E+02
Cu-64	0.00E+00	9.20E+03	4.32E+03	0.00E+00	2.32E+04	0.00E+00	7.84E+05
Zn-65	3.17E+08	1.01E+09	4.56E+08	0.00E+00	6.75E+08	0.00E+00	6.36E+08
Zn-69	8.73E-06	1.67E-05	1.16E-06	0.00E+00	1.09E-05	0.00E+00	2.51E-06
Br-83	0.00E+00	0.00E+00	3.11E+00	0.00E+00	0.00E+00	0.00E+00	4.47E+00
Br-84	0.00E+00	0.00E+00	2.48E-11	0.00E+00	0.00E+00	0.00E+00	1.94E-16
Br-85	0.00E+00	0.00E+00	0.00E+00	0.00E+00	0.00E+00	0.00E+00	0.00E+00
Rb-86	0.00E+00	2.19E+08	1.02E+08	0.00E+00	0.00E+00	0.00E+00	4.33E+07
Rb-88	0.00E+00	3.43E-22	1.82E-22	0.00E+00	0.00E+00	0.00E+00	4.74E-33
Rb-89	0.00E+00	1.39E-26	9.74E-27	0.00E+00	0.00E+00	0.00E+00	8.05E-40
Sr-89	9.96E+09	0.00E+00	2.86E+08	0.00E+00	0.00E+00	0.00E+00	1.60E+09
Sr-90	6.05E+11	0.00E+00	1.48E+11	0.00E+00	0.00E+00	0.00E+00	1.75E+10
Sr-91	3.05E+05	0.00E+00	1.23E+04	0.00E+00	0.00E+00	0.00E+00	1.45E+06
Sr-92	4.27E+02	0.00E+00	1.85E+01	0.00E+00	0.00E+00	0.00E+00	8.45E+03
Y-90	1.33E+04	0.00E+00	3.56E+02	0.00E+00	0.00E+00	0.00E+00	1.41E+08
Y-91m	5.22E-09	0.00E+00	2.02E-10	0.00E+00	0.00E+00	0.00E+00	1.53E-08
Y-91	5.11E+06	0.00E+00	1.37E+05	0.00E+00	0.00E+00	0.00E+00	2.81E+09
Y-92	9.15E-01	0.00E+00	2.68E-02	0.00E+00	0.00E+00	0.00E+00	1.60E+04
Y-93	1.70E+02	0.00E+00	4.68E+00	0.00E+00	0.00E+00	0.00E+00	5.38E+06
Zr-95	1.17E+06	3.77E+05	2.55E+05	0.00E+00	5.91E+05	0.00E+00	1.19E+09
Zr-97	3.37E+02	6.81E+01	3.11E+01	0.00E+00	1.03E+02	0.00E+00	2.11E+07
Nb-95	1.43E+05	7.94E+04	4.27E+04	0.00E+00	7.85E+04	0.00E+00	4.82E+08
Mo-99	0.00E+00	6.15E+06	1.17E+06	0.00E+00	1.39E+07	0.00E+00	1.43E+07
Tc-99m	3.10E+00	8.77E+00	1.12E+02	0.00E+00	1.33E+02	4.30E+00	5.19E+03
Tc-101	8.22E-31	1.18E-30	1.16E-29	0.00E+00	2.13E-29	6.05E-31	3.56E-42
Ru-103	4.76E+06	0.00E+00	2.05E+06	0.00E+00	1.82E+07	0.00E+00	5.56E+08
Ru-105	5.39E+01	0.00E+00	2.13E+01	0.00E+00	6.96E+02	0.00E+00	3.29E+04
Ru-106	1.93E+08	0.00E+00	2.44E+07	0.00E+00	3.72E+08	0.00E+00	1.25E+10
Ag-110m	1.05E+07	9.75E+06	5.79E+06	0.00E+00	1.92E+07	0.00E+00	3.98E+09
Sb-122	2.80E+05	6.43E+03	9.65E+04	4.34E+03	0.00E+00	1.68E+05	1.06E+08
Sb-124	1.04E+08	1.96E+06	4.07E+07	2.52E+05	0.00E+00	8.07E+07	2.94E+09
Sb-125	1.37E+08	1.53E+06	3.25E+07	1.39E+05	0.00E+00	1.05E+08	1.50E+09

ATTACHMENT V TO IPN-98-018

PROPOSED CHANGES TO PROCESS CONTROL PROGRAM (PCP) MANUAL

RESULTING FROM

PROPOSED CHANGES TO TECHNICAL SPECIFICATIONS

INCORPORATING RECOMMENDATIONS OF GENERIC LETTER 89-01

AND DRAFT PART 20 GENERIC LETTER

NEW YORK POWER AUTHORITY
INDIAN POINT 3 NUCLEAR POWER PLANT
DOCKET NO. 50-286
DPR-64

TABLE OF CONTENTS

1.0 PURPOSE 1

2.0 SCOPE 1
2.1 Waste Stream Identification 2
2.2 Disposition of Radioactive Material Sent to a Vendor for Intermediate Processing 2
2.3 Disposition of Radioactive Material Sent Directly to a Disposal Site 3

3.0 REFERENCES 3
3.1 Federal Regulations 3
3.2 Plant Procedures 3
3.3 Disposal Site Requirements 5
3.4 NRC Information Notices 7
3.5 Vendor Procedures 7

4.0 RESPONSIBILITIES 8

5.0 DEFINITIONS 9
5.1 Definitions 9

6.0 PREREQUISITES 13
6.1 Maintenance of Regulatory Material 13
6.2 Representative Radionuclide Sample Data 13
6.3 Initial and Cyclic Training 13
6.4 Requirements for Contracted Processing Vendors 14

7.0 PRECAUTIONS/LIMITATIONS 15
7.1 Precautions 15
7.2 Limitations 15

8.0 SPECIAL TOOLS AND EQUIPMENT 15
8.1 Frequency of Use and Descriptions 15

9.0 PROCEDURE 16
9.1 Waste Management Practices 16
9.2 Waste Stream Sampling Methods and Frequency 17
9.3 Waste Classification 19
9.4 Quality Control for Sampling and Classification 21
9.5 Dewatering Operations 21
9.6 Additional Barnwell Waste Management Facility Requirements 22
9.7 Waste Packaging 23
9.8 Reporting 23

10.0 ATTACHMENTS 24

SOLID RADIOACTIVE WASTE PROCESS CONTROL PROGRAM

1.0 PURPOSE

The purpose of this document is to provide instructional guidance and a description of the solid radioactive waste Process Control Program (PCP) at the Indian Point No. 3 Nuclear Plant (Plant). The PCP describes the methods used for processing, classification and packaging low-level radioactive waste into a form acceptable for disposal, in accordance with 10 CFR Part 61 and current disposal site criteria.

To ensure the safe operation of the solid radwaste system, the solid radwaste system will be used in accordance with this Process Control Program to process wet radioactive wastes to meet shipping and burial ground requirements.

This document addresses the process control program in the context of disposal criteria, and includes those of the Barnwell, South Carolina Low Level Radioactive Waste (LLRW) disposal facility. Currently, the New York State generators of LLRW do not have access to that facility.

This document shall be reviewed for applicability prior to the next LLRW disposal shipment.

2.0 SCOPE

This document describes current and planned practices for sampling, classification, processing and packaging of radioactive waste to current regulations and burial site criteria regardless of whether or not we are storing on site. This document does not address irradiated hardware which will be managed on a case-by-case basis under the direction of the Waste Management General Supervisor.

2.1 Waste Stream Identification

The Plant has identified seven different categories of waste streams and treats each separately for classification purposes. The following list isn't intended to specifically name every possible waste stream but to list general categories of existing waste streams. Examples of current active waste streams are as follows:

a) Dry Active Waste (DAW).
b) Primary Resin.
c) Cartridge Filters.
d) Liquid Waste Processing (LWP) D-70 Media.
e) LWP Activated Charcoal.
f) LWP Anion Resin.
g) LWP Cation Resin.

2.2 Disposition of Radioactive Material Sent to a Vendor for Intermediate Processing

Current and planned practices include sending radioactive material generated by the Plant to SEG or other vendors for volume reduction (VR) processing instead of directly to a disposal site.

2.2.1 This document addresses the requirements for 10CFR Part 61.55 (waste classification) for radioactive material sent to vendor facilities.

2.2.2 This document does NOT address the requirements for 10CFR Part 61.56 (waste characteristics) for material sent to intermediate processors, because the final treatment and packaging is performed at the vendor facilities.

2.2.3 The types of radioactive material sent to intermediate processors could include, but is not limited to, the following:

- DAW
- Steam Generator Blowdown Resin
- Steam Generator Blowdown Filters
- Contaminated Oil
- Contaminated Soil
- Filter media

2.3 Disposition of Radioactive Material Sent Directly to a Disposal Site

This document addresses both the 10CFR Part 61.55 and Part 61.56 requirements for the waste streams listed in Section 2.1.

3.0 REFERENCES

3.1 Federal Regulations

3.1.1 Code of Federal Regulations, Title 10, Part 20.

3.1.2 Code of Federal Regulations, Title 10, Part 61.

3.2 Plant Procedures

3.2.1 Quality Assurance Procedure Manual Section 18.1, "Quality Assurance Audit Program".

3.2.2 Quality Assurance Instructions, QAI 1.3, "Process Control Program (PCP), Tech Spec B QA Surveillance Plan".

3.2.3 AP-3 "IP3 procedure Preparation, Review & Approval".

3.2.4 RE-ADM-1-5, "RES Self-Assessment Program".

3.2.5 RE-REA-4-13, "Spent Resin Handling".

3.2.6 RE-RMC-11-2, "Labeling and Storage of Radioactive Material".

3.2.7 RE-RWM-12-2, "Demineralizer Liquid Waste Processing System".

3.2.8 RE-RWM-12-3, "Waste Classification Compliance Program".

3.2.9 RE-RWM-12-5, "Handling of the NuPac 14D-2.0 Shielded Shipping Cask".

3.2.10 RE-RWM-12-6, "Radioactive Waste Handling & Packaging".

3.2.11 RE-RWM-12-7, "Operation of the Portable Mechanical Filter NF-50".

3.2.12 RE-RWM-12-9, "Maintenance of Nuclear Plant Filters".

3.2.13 RE-RWM-12-19, "Use of the RADMAN Computer Code".

3.2.14 RE-RWM-12-21, "Use & Handling of the TFC120-DBR High Integrity Container".

3.2.15 RE-RWM-12-22, "HN-200 Shielded Cask Handling".

3.2.16 RE-RWM-12-23, "Use of the DEMTRK Computer Code".

3.2.17 RE-RWM-12-26, "Use of the FILTRK Computer Code".

3.2.18 RE-RWM-12-27, "Use & Handling of the NuPac 10-142 Type B Cask".

3.2.19 RE-RWM-12-30, "Waste Management Task Scheduling".

3.2.20 RE-RWM-12-35, "Spent Resin Transfer".

3.2.21 RE-RWM-12-40, "Use of the Westinghouse DOT 2R/20WC Cask".

3.2.22 RE-RWM-12-42, "Operation of the Waste Compactor for Drums".

3.2.23 RE-RWM-12-46, "Sorting table use".

3.2.24 RE-RWM-12-44, "Use of the Underwater Filter System".

3.2.25 RE-RWM-12-45, "Use of the TRASHP Computer Code".

3.2.26 RE-RWM-12-47, "Installation and maintenance of Pall Filter Co. Nuclear Plant Filters".

3.2.27 RE-RWM-12-48, "Spent Resin Transfer Using the NuPac Resin Drying System".

3.2.28 RE-TRA-15-13, "Radwaste Utility Operator Qualification Program".

3.2.29 RE-RWM-12-28, "Interim Radwaste Storage Facility (IRWSF)".

3.3 Disposal Site Requirements

3.3.1 Barnwell Waste Management Facility site disposal criteria.

3.3.2 Barnwell (South Carolina) disposal site license.

3.4 NRC Information Notices

3.4.1 NRC Information and Enforcement Bulletin 79-19: Packaging of Low-Level Radioactive Waste for Transport and Burial

3.4.2 NRC Information Notice 80-24: Low-Level Radioactive Waste Burial Criteria

RE-PCP
Rev. 4

3.4.3 NRC Information Notice 80-32: Clarification of Certain Requirements for Exclusive-Use Shipments of Radioactive Materials

3.4.4 NRC Information Notice 80-32, Rev. 1: Clarification of Certain Requirements for Exclusive-Use Shipments of Radioactive Materials

3.4.5 NRC Information Notice 83-05: Obtaining Approval for Disposing of Very-Low-Level Radioactive Waste - 10CFR Section 20.302

3.4.6 NRC Information Notice 83-10: Clarification of Several Aspects Relating to Use of NRC-Certified Transport Packages

3.4.7 NRC Information Notice 83-33: Non-Representative Sampling of Contaminated Oil

3.4.8 NRC Information Notice 84-50: Clarification of Scope of Quality Assurance Programs for Transport Packages Pursuant to 10CFR 50 Appendix B

3.4.9 NRC Information Notice 84-72: Clarification of Conditions for Waste Shipments Subject to Hydrogen Gas Generation

3.4.10 NRC Information Notice 85-92: Surveys of Wastes Before Disposal from Nuclear Reactor Facilities

3.4.11 NRC Information Notice 86-20: Low-Level Radioactive Waste Scaling Factors, 10CFR 61

3.4.12 NRC Information Notice 86-90: Requests to Dispose of Very Low-Level Radioactive Waste Pursuant 10CFR 20.302

3.4.13 NRC Information Notice 87-03: Segregation of Hazardous and Low-Level Radioactive Wastes

3.4.14 NRC Information Notice 87-07: Quality Control of On-Site Dewatering/Solidification Operations by Outside Contractors

3.4.15 NRC Information Notice 89-27: Limitations on the Use of Waste Forms and High Integrity Containers for the Disposal of Low-Level Radioactive Waste

3.4.16 NRC Information Notice 92-62: Emergency Response Information Requirements for Radioactive Material Shipments

3.4.17 NRC Information Notice 92-72: Employee Training and Shipper Registration Requirements for Transporting Radioactive Materials

3.5 Vendor Documents

==========

NOTE

The operational aspects of vendor procedures are incorporated into site-specific procedures for each particular process listed in Section 3.2 of this document.

==========

3.5.1 Nuclear Packaging, Inc., Dewatering System Topical Report No. TP-02-NP-A, Rev. 0.

3.5.2 Chem-Nuclear Systems, Inc. Q.A. Program Document No. QA-AD-001, latest revision.

3.5.3 Chem-Nuclear Systems, Inc. Dewatering Control Process Containers Topical Report No. DW-11118-01-NP-A.

3.5.4 Scientific Ecology Group, Inc. Q.A. Program No. SEG/QA-100, latest revision.

3.5.5 Westinghouse-Hittman Nuclear, Inc. Mobil In-Container Dewatering and Solidification System Topical Report #STD-R-05-011NP-A.

3.5.6 TFC Nuclear Associates, Inc. Q.A. Manual.

3.5.7 TFC Nuclear Associates, Inc. Dewatering Test Report of NUHIC-120D (BR) Bead Resin, 1984.

3.5.8 TFC Nuclear Associates Topical Report for High Integrity Containers No. TFC-TV-84.

3.5.9 "RADMAN - A Computer Code", Main Topical Report.

3.5.10 NRC Acceptance Letter: RADMAN Topical Report, July 25, 1983.

4.0 RESPONSIBILITIES

The Waste Management General Supervisor has the overall responsibility for implementing the PCP. The Waste Management Processing and Transportation Supervisor is tasked with the day-to-day responsibilities for the following:

a) Implementing the requirements of this document.

b) Ensuring that radioactive waste is characterized and classified in accordance with 10CFR Part 61.55 and Part 61.56.

c) Ensuring that radioactive waste is characterized and classified in accordance with volume reduction facility and disposal site licenses and other requirements.

d) Designating other approved procedures (if required) to be implemented in the packaging of any specific batch of waste.

e) Providing a designated regulatory point of contact between the Plant and the NRC, or volume reduction facility or disposal site.

f) Maintaining records of on-site and off-site waste stream sample analysis and Plant evaluations.

g) Suspending shipments of defectively processed or defectively packaged solid radioactive wastes from the site when the provisions of this process control program are not satisfied.

5.0 DEFINITIONS

5.1 Definitions

5.1.1 Batch - An isolated quantity of feed waste to be processed having essentially constant physical and chemical characteristics. (The addition or removal of water will not be considered to create a new batch).

5.1.2 Chelating Agents - EDTA, DTPA, hydroxy-carboxylic acids, citric acid, carbolic acid and gluconic acid.

5.1.3 Confirmatory Analysis - The practice of verifying that gross radioactivity measurements using MCA are reasonably consistent with independent laboratory sample data.

5.1.4 Density Correction - The factor which converts sample data reported in uCi/g to uCi/cc prior to characterization using the RADMAN core sample mode.

5.1.5 Dewatered Waste - Wet waste that has been processed by means other than solidification, encapsulation, or absorption to meet the free standing liquid requirements of 10CFR Part 61.56 (a)(3) and (b)(2).

5.1.6 Dilution Factor - The RADMAN computer code factor to account for the non-radioactive binder added to the waste stream in the final product when waste is solidified.

5.1.7 Encapsulation - Encapsulation is a means of providing stability for certain types of waste by surrounding the waste by an appropriate encapsulation media.

5.1.8 Gamma-Spectral-Analysis - Also known as IG, MCA, Ge/Li and gamma spectroscopy.

5.1.9 Gross Radioactivity Measurements - More commonly known as dose to curie conversion for packaged waste characterization and classification.

5.1.10 Homogeneous - Of the same kind or nature; essentially alike. Most waste streams are considered homogeneous for purposes of waste classification.

5.1.11 Low-Level Radioactive Waste (LLW) - Those wastes containing source, special nuclear, or by-product material that are acceptable for disposal in a land disposal facility. For the purposes of this definition, low-level radioactive waste has the same meaning as in the Low-Level Waste Policy Act, that is, radioactive waste not classified as high-level radioactive waste, transuranic waste, spent nuclear fuel, or by-product material as defined in section 11e.(2) of the Atomic Energy Act (uranium or thorium tailings and waste).

5.1.12 Measurement of Specific Radionuclides - More commonly known as direct sample or container sample using MCA data for packaged waste characterization and classification.

5.1.13 Operable - A system, subsystem, train, component or device shall be OPERABLE or have OPERABILITY when it is capable of performing its specified functions(s), and when all necessary attendant instrumentation, controls, electrical power, cooling or seal water, lubrication or other auxiliary equipment that are required for the system, subsystem, train, component, or device to perform its function(s) are also capable of performing their related support function(s).

5.1.14 Prequalification Program - The testing program implemented to demonstrate that the proposed method of wet waste processing will result in a waste form acceptable to the land disposal facility and the NRC.

5.1.15 Processing - Changing, modifying, and/or packaging wet radioactive waste into a form that is acceptable to a disposal facility.

5.1.16 Quality Assurance/Quality Control - As used in this document, "quality assurance" comprises all those planned and systematic actions necessary to provide adequate confidence that a structure, system, or component will perform satisfactorily in service. Quality assurance includes quality control, which comprises those quality assurance actions related to the physical characteristics of a material structure, component, or system to predetermined requirements.

5.1.17 Sampling Plan - A program to ensure that representative samples from the feed waste and the final waste form are obtained and tested for conformance with parameters stated in the PCP and waste form acceptance criteria.

5.1.18 Scaling Factor - A dimensionless number which relates the concentration of an easy to measure radionuclide (gamma emitter) to one which is difficult to measure (beta and/or alpha emitters).

5.1.19 Significant Quantity - For purposes of waste classification all the following radionuclide values shall be considered significant and must be reported on the disposal manifest.

- Any value (real or LLD) for radionuclides listed in Appendix F to 10CFR20
- Greater than or equal to 1 percent of the class A concentration limits as determined by 10CFR Part 61.55 Table 1.
- Greater than or equal to 1 percent of the Class A concentration limits listed in 10CFR Part 61.55 Table 2.
- Greater than or equal to 1 percent of the total activity.
- Greater than or equal to 1 percent of the Reportable Quantity limits listed in 49CFR Part 172.101 Table 2.

5.1.20 Solidification - Shall be the conversion of wet wastes into a form that meets shipping and burial ground requirements.

5.1.21 Special Radionuclides - The RADMAN computer code term for radionuclides listed in Appendix F to 10CFR20.

5.1.22 Stability - As used in this document, "stability" means structural stability. Stability requires that the waste form maintain its structural integrity under the expected disposal conditions.

5.1.23 Training - A systematic program that ensures a person has knowledge of hazardous materials and hazardous materials regulations.

5.1.24 Type A Package - Is the packaging together with its radioactive contents limited to A_1 or A_2 as appropriate that meets the requirements of 49CFR Part 173.410 and Part 173.412, and is designed to retain the integrity of containment and shielding under normal conditions of transport as demonstrated by the tests set forth in 49CFR Part 173.465 or Part 173.466 as appropriate.

5.1.25 Type B Package - Is the packaging together with its radioactive contents that is designed to retain the integrity of containment and shielding when subjected to the normal conditions of transport and hypothetical accident test conditions set forth in 10CFR Part 71.

5.1.26 Waste Container - A vessel of any shape, size, and composition used to contain the final processed waste.

5.1.27 Waste Form - Waste in a waste container acceptable for disposal at a licensed disposal facility.

5.1.28 Waste Stream - A Plant specific and constant source of waste with a distinct radionuclide content and distribution.

5.1.29 Waste Type - A single packaging configuration and waste form tied to a specific waste stream.

6.0 PREREQUISITES

6.1 Maintenance of Regulatory Material

Ensure that a current set of DOT, NRC, EPA, New York State, Volume Reduction facility and disposal site regulations and requirements are maintained at the Plant and are readily available for reference.

6.2 Representative Radionuclide Sample Data

Ensure that representative radionuclide sample data is on file for each active waste stream. Unless operation conditions or changes in processing methods require increased sample frequency, data is considered to be current if it meets the following:

a) NRC Class "A" waste streams must be sampled at least every two years.

b) NRC Class "B" or "C" waste streams and waste streams that haves the potential to be NRC Class "B" or "C" must be sampled at least every year.

6.3 Initial and Cyclic Training

A training program shall be developed, implemented and maintained for all personnel involved in processing, packaging, handling and transportation of radioactive waste to ensure radwaste operations are performed within the requirements of NRC Information Bulletin 79-19 and 49CFR Part 172.700 through Part 172.704.

Specific employee training is required for each person who performs the following job functions [172.702(b)].

a) Classifies hazardous materials.

b) Packages hazardous materials.

c) Marks and labels packages containing hazardous materials.

d) Prepares shipping papers for hazardous materials.

e) Offers or accepts hazardous materials for transportation.

f) Handles hazardous materials.

g) Marks or placards transport vehicles.

h) Operates or crews transport vehicles.

i) Works in a transportation facility and performs functions in proximity to hazardous materials which are to be transported.

j) Inspects or tests packages.

Cyclic training is defined as within two years.

Copies of training records are required for as long as a person is employed and 90 days thereafter. The records should include, as a minimum, the following:

a) Trainee's name and signature.

b) Training dates.

c) Training material or source reference.

d) Trainer's name and signature.

6.4 Requirements for Contracted Processing Vendors

Plant management shall review vendor(s) topical reports and test procedures.

==========

NOTE

The PCP does not have to include the vendor's Topical Report if it has NRC approval, or has been previously submitted to the NRC.

==========

Plant management review will assure that the vendor's operations and requirements are compatible with the responsibilities and operation of the Plant.

Training requirements and records listed in Section 6.3 also apply to contracted vendors.

7.0 PRECAUTIONS/LIMITATIONS

7.1 Precautions

a) Radioactive materials shall be handled in accordance with applicable radiation protection procedures.

b) All radioactive waste must be processed or packaged to meet the minimum requirements listed in 10CFR Part 61.56 (1) through (8).

7.2 Limitations

a) Only qualified personnel will characterize or package radioactive waste or radioactive materials.

b) All Plant personnel that have any involvement with radioactive waste management computer software shall be familiar with its functions, operation and maintenance.

c) With the provisions of this Process Control Program not satisfied, suspend shipments of defectively processed or defectively packaged solid radioactive wastes from the site.

8.0 SPECIAL TOOLS AND EQUIPMENT

8.1 Frequency of Use and Descriptions

Required tools and equipment will vary depending on the specific process and waste container that is used. The various tools and equipment which may be required are detailed in the vendor procedures listed in the Section 3.0 of this document.

9.0 PROCEDURE

9.1 Waste Management Practices

9.1.1 Solidification/encapsulation methods include the following:

a) Present and planned practice is NOT to solidify or encapsulate any waste streams.

b) All liquid waste is dewatered to less than 1 percent by volume prior to shipment.

c) If solidification is required in the future, then at least one representative test specimen from at least every tenth batch of each type of wet radioactive waste will be checked to verify solidification. If any specimen fails to verify solidification, the solidification of the batch under test shall be suspended until such time as additional test specimens can be obtained, alternative solidification parameters can be determined, and a subsequent test verifies solidification. If the initial test specimen from a batch of waste fails to verify solidification, then provide for the collection and testing of representative test specimens from each consecutive batch of the same type of wet waste until at least 3 consecutive initial test specimens demonstrates solidification. The process shall be modified as required to assure solidification of subsequent batches of water.

9.1.2 Operation and maintenance of dewatering systems and equipment include the following:

a) Present and planned practice is to utilize Plant personnel, supplemented by contracted vendor personnel, on a demand basis to operate and maintain dewatering systems and equipment using Plant procedures.

b) All disposal liners are manufactured by and purchased from QA approved vendors.

9.1.3 High integrity container usage includes the following:

a) High Integrity Containers (fabricated from high density cross-linked polyethylene) may be used as the disposal container for NRC Class "A" waste.

b) High Integrity Containers may also be used for NRC Class "B" and Class "C" waste, but enhanced structural stability is required for polyethylene HICS received at the CNSI Barnwell disposal site.

c) Enhanced structural stability to meet the requirements of 10CFR Part 61.56 and the State of South Carolina is accomplished by the use of DHEC approved concrete overpack structures at the Barnwell disposal site.

9.1.4 ALARA considerations are addressed in all phases of the processes involving handling, packaging and transfer of any type or form of radioactive waste (dewatered or dry). Spent resins, spent filter cartridges and sludges are typically processed within shields (normally the shipping cask). Sluiceable demineralizers are shielded when in service. Radiation exposure and other health physics requirements are controlled by the issuance of a Radiation Work Permit (RWP) for each task.

9.2 <u>Waste Stream Sampling Methods and Frequency</u>

9.2.1 The following general requirements apply to Plant waste stream sampling:

(a) Treat each waste stream separately for classification purposes.

(b) Meet the minimum sample frequency requirements as stated in Section 6.2.

(c) Ensure samples are representative of or can be correlated to the final waste form.

(d) Determine the density for each waste stream (not applicable for DAW and filters).

(e) Perform an in-house analysis for gamma emitting radionuclides for each sample sent to an independent laboratory.

(f) Periodically perform in-house analysis for gamma emitting radionuclides for comparison to the current data base values for gamma emitters. (The current data base is usually based on the most recent independent laboratory results.)

(g) Resolve any discrepancies between in-house results and the independent laboratory results for the same or replicate sample as soon as possible.

(h) Maintain records of on-site and off-site waste stream sample analysis and evaluations.

9.2.2 The following conditions may require increased sampling frequencies relative to the requirements in Section 6.2:

a) When reactor coolant Dose Equivalent Iodine approaches 25 percent of the Plant technical specification limit.

b) When there is a significant increase of the reactor coolant I-131/I-133 ratio at steady state power.

c) When Np-239 activity is greater than .01 uCi/cc in the reactor coolant.

d) If alpha analyses result in alpha to beta-gamma ratios significantly in excess of the trigger levels established by Radiological Engineering. The occasional exceedance of the trigger values is expected and does not necessarily warrant increased sampling frequency.

e) When there is an extended reactor shutdown (> 90 days).

f) When there are changes to liquid waste processing, such as bypassing filters, utilizing filters or a change in ion exchange media.

9.2.3 The following requirements apply to infrequent or abnormal waste types:

a) Infrequent or abnormal waste types that may be generated must be evaluated on a case-by-case basis.

b) The Waste Processing and Transportation Supervisor will determine if the waste can be correlated to an existing waste stream.

c) If the radioactive waste cannot be correlated to an existing waste stream, the Waste Processing and Transportation Supervisor shall determine specific off-site sampling and analysis requirements necessary to properly classify the material.

9.2.4 Specific sampling methods and data evaluation criteria are detailed in RE-RWM-12-3 for each active waste stream.

9.3 Waste Classification

Specific classification steps for each active waste type are detailed in RE-RWM-12-3 and specific radioactive material management software operating procedures.

9.3.1 General requirements for scaling factors include the following:

a) The Plant has established an inferential measurement program whereby concentrations of radionuclides which cannot be readily measured are estimated through ratioing with radionuclides which can be readily measured.

b) Scaling factor relationships are developed on a waste stream specific basis. These relationships are periodically revised to reflect current independent lab data from direct measurement of samples. The scaling factor relationships currently used by the Plant are as follows:

- Hard to detect ACTIVATION product radionuclides and C-14 are estimated by using scaling factors with measured Co-60 activities.

- Hard to detect FISSION product radionuclides and H-3, Tc-99 and I-129 are estimated by using scaling factors with measured Cs-137 activities.

- Hard to detect TRANSURANIC radionuclides are estimated by using scaling factors with measured Ce-144 activities. Where Ce-144 cannot be readily measured, transuranics are estimated by using scaling factors with measured Cs-137 activities.

9.3.2 General requirements for the determination of total activity and radio-nuclide concentrations include the following:

a) The activity for the waste streams defined in Section 2.1 is estimated by using either Gross Radioactivity Measurement or Direct Measurement of Radionuclides. Current specific practices are as follows:

- DAW - Gross radioactivity measurement in conjunction with the RADMAN and TRASHP computer codes, other approved computer codes or hand calculation.

- Filters - Gross radioactivity measurement in conjunction with the FILTRK computer code, other approved computer codes or hand calculation.

- All Other Waste Streams - Direct measurement of radionuclides in conjunction with the RADMAN and TRASHP computer codes, other approved computer codes or hand calculation.

b) Determination of the NRC waste classification is performed by comparing the measured or calculated concentrations of significant radionuclides in the final waste form to those listed in 10CFR Part 61.55.

9.4 Quality Control for Sampling and Classification

9.4.1 The RADMAN computer code provides a mechanism to assist the Plant in conducting a quality control program in accordance with the waste classification requirements listed in 10CFR Part 61.55. All waste stream sample data changes are written to a computer data file for future review and reference.

9.4.2 Audit Frequency and Management Review includes the following:

a) Appendix F to 10CFR20 requires periodic audits which must include management reviews.

b) Management audits of the Plant Sampling and Classification Program shall be periodically performed to verify the adequacy of maintenance sampling and analysis.

c) Audits are performed and documented by any of the following:

- Radiation Protection Department.
- Corporate Radiation Protection Staff.
- Quality Assurance Department.
- Qualified Vendors.

d) The Plant audit program is detailed in the Plant Quality Assurance Procedure manual in Section 18.1. This program is supplemented by Quality Assurance Instruction 1.3.

9.5 Dewatering Operations

9.5.1 Processing requirements during dewatering operations include the following:

a) All dewatering operations are performed per approved Plant or vendor operating procedures and instructions.

b) Dewatering limitations and capabilities are verified by vendor Topical Reports or Operating and Testing Procedures.

9.5.2 Dewatered resin activity limitations include the following:

a) Dewatered resins will not be shipped off-site that have activities which will produce greater than 1.0E+8 rads total accumulated dose over 300 years. This is usually verified by comparing the container specific activity at the time of shipment to the following concentration limits for radionuclides with a half-life greater than five years:

- 10 Ci (0.37 TBq) per cubic foot.
- 350 uCi (8.75E-3Bq) per cubic centimeter.

9.6 Additional Barnwell Waste Management Facility Requirements

NRC Class A waste which exceeds 1 uCi/cc (for radionuclides with a half-life greater than five years) must meet the DHEC/CNSI stability requirement defined in the Barnwell Site Criteria.

Each container of waste must be clearly labeled to identify whether it is Class "A" waste, Class "B" waste, or Class "C" waste, in accordance with 10CFR Part 61.55.

Arrange for Class "B" and Class "C" waste, received at the Barnwell facility in polyethylene HICs, to be disposed within approved disposal overpacks.

Void spaces within the waste and between the waste and its packaging shall be reduced to the extent practicable, but in NO case shall less than 85 percent of the capacity of the container be filled.

The Waste Processing and Transportation Supervisor must apply for a variance request prior to shipment if the 85 percent fill requirement is NOT achievable.

==========

NOTE

The South Carolina DHEC and CNSI recognize that filters and irradiated hardware will NOT routinely meet the 85 percent condition. Provided that containers of these wastes types are packaged to the fullest extent practicable, no written justification is required.

==========

Only personnel designated in writing as official representatives of the New York Power Authority can sign the Barnwell Waste Management Facility, Radioactive Shipment Manifest Form certification statements (blocks 18 and 19 on the manifest cover sheet).

9.7 Waste Packaging

9.7.1 Waste in it's final form will be packaged in accordance with Title 10 and Title 49 of the Code of federal regulations and in accordance with current burial site criteria as detailed in plant procedures.

9.8 Reporting

9.8.1 Releases
In accordance with Technical Specification Appendix B 4.3.2.1 and the REC section 5.1, ensure that the Annual Radioactive Effluent Release Report includes a summary of the quantities of solid radioactive waste released from the unit.

9.8.2 Major Changes to the Process Control Program
Licensee initiated major changes to the radioactive waste systems shall be reported to the Commission in the Annual Radioactive Effluent Release Report for the year in which the change evaluation was received by the PORC. The discussion of each change shall contain those items noted in the REC section 5.1.

10.0 ATTACHMENTS

10.1 Block diagram of the typical vendor-supplied waste processing system.

10.2 Block diagram of a typical vendor's heat-enhanced dewatering system (HED). May be used on HICS and liners with dewatering internals installed.

10.3 Block diagram, generic dewatering system.

ATTACHMENT VI TO IPN-98-018

MARKUP COPY OF DOCUMENTS CHANGED TO REFLECT PROPOSED CHANGES TO TECHNICAL SPECIFICATIONS INCORPORATING RECOMMENDATIONS OF GENERIC LETTER 89-01 AND DRAFT PART 20 GENERIC LETTER

[PROVIDED FOR COMPARISON PURPOSES ONLY]

BOLD text indicates text that was added

~~LINED OUT~~ text indicates text that was deleted

NEW YORK POWER AUTHORITY
INDIAN POINT 3 NUCLEAR POWER PLANT
DOCKET NO. 50-286
DPR-64

1.16 REPORTABLE EVENT

A REPORTABLE EVENT shall be any of those conditions specified in Section 50.73 to 10 CFR 50.

1.17 CORE OPERATING LIMITS REPORT

The CORE OPERATING LIMITS REPORT (COLR) is the unit-specific document that provides core operating limits for the current operating reload cycle. These cycle-specific core operating limits shall be determined for each reload cycle in accordance with Specification 6.9.1.6. Plant operation within these operating limits is addressed in individual specifications.

1.18 SHUTDOWN MARGIN

SHUTDOWN MARGIN (SDM) is the instantaneous amount of negative reactivity by which the reactor is subcritical or would be subcritical from its present condition assuming all full-length rod cluster assemblies (shutdown and control) are fully inserted except for the single rod cluster assembly of highest reactivity worth which is assumed to be fully withdrawn.

1.19 EFFLUENT CONCENTRATION

The EFFLUENT CONCENTRATION is that concentration of a radionuclide specified in 10 CFR 20, Table 2 of Appendix B.

1.20 MEMBER(S) OF THE PUBLIC

MEMBER OF THE PUBLIC ~~shall include all persons who are not occupationally associated with the plant. This category does not include employees of either utility, their contractors or vendors. Also excluded from this category are persons who enter the site to service equipment or to make deliveries. This category does include persons who use portions of the site for recreational, occupational or other purposes not associated with the plant~~ means any individual except when that individual is receiving an occupational dose.

1.21 OCCUPATIONAL DOSE

OCCUPATIONAL DOSE means the dose received by an individual in the course of employment in which the individual's assigned duties involve exposure to radiation or to radioactive material from licensed and unlicensed sources of radiation, whether in the possession of the licensee or other person. OCCUPATIONAL DOSE does not include dose received from background radiation, from any medical administration the individual has received, from exposure administered to individuals administered radioactive material and released in accordance with 35.75, from voluntary participation in medical research programs, or as a MEMBER OF THE PUBLIC.

1.22 OFFSITE DOSE CALCULATION MANUAL (ODCM)

The OFFSITE DOSE CALCULATION MANUAL SHALL contain the current methodology and parameters used in the calculation of offsite doses ~~due to~~ resulting from radioactive gaseous and liquid effluents, in the calculation of gaseous and liquid effluent monitoring Alarm/Trip Setpoints, and in the conduct of the ~~environmental radiological~~ Radiological Environmental Monitoring Program. The ODCM shall also contain (1) the Radioactive Effluent Controls and Radiological Environmental Monitoring Programs required by Appendix A Technical Specification 6.8.4 and (2) descriptions of the information that should be included in the Annual Radiological Environmental Operating and Radioactive Effluent Release Reports required by Appendix B Technical Specifications 4.3.2.1 and 4.3.2.2.

1.23 PROCESS CONTROL PROGRAM (PCP)

The PROCESS CONTROL PROGRAM shall contain the current ~~formula~~ formulas, sampling, analyses, tests, and determinations to be made to ensure that the processing and packaging of solid radioactive wastes based on demonstrated processing of actual or simulated wet solid wastes will be accomplished in such a way to assure compliance with 10 CFR Parts 20, 61 and 71, and Federal and State regulations and other requirements governing the disposal of ~~the~~ solid radioactive waste.

1.24 SITE BOUNDARY

The SITE BOUNDARY (see Figure ~~5.8-1~~ 1-1) ~~shall be~~ means that line beyond which the land or property is ~~neither~~ not owned, ~~nor~~ leased, ~~nor~~ or otherwise controlled by either site licensee.

1.25 UNRESTRICTED AREA

An UNRESTRICTED AREA (see Figure ~~5.8-1~~ 1-1) shall be any area at or beyond the SITE BOUNDARY access to which is not controlled by either site licensee for purposes of protection of individuals from exposure to radiation and radioactive materials, or any area within the SITE BOUNDARY used for residential quarters or for industrial, commercial, institutional, and/or recreational purposes. The UNRESTRICTED AREA boundary may coincide with the exclusion (fenced) are boundary, as defined in 10 CFR 100.3(a), but the UNRESTRICTED AREA does not include areas over water bodies. The concept of UNRESTRICTED AREAS, established at or beyond the SITE BOUNDARY, is utilized in the LIMITING CONDITIONS FOR OPERATION to keep levels of radioactive materials in liquid and gaseous effluents as low is as is reasonably achievable, pursuant to 10 CFR 50.36a.

b. Each REPORTABLE EVENT shall be reviewed by the PORC and a report submitted by the Site Executive Officer to the Chief Nuclear Officer, Vice President Regulatory Affairs and Special Projects, and the Chairman of the SRC.

6.7 SAFETY LIMIT VIOLATION

6.7.1 The following actions shall be taken in the event a Safety Limit is violated:

a. The reactor shall be shut down and reactor operation shall only be resumed in accordance with the provisions of 10 CFR 50.36(c)(1)(i).

b. The Safety Limit Violation shall be reported immediately to the Commission. The Chief Nuclear Officer, Vice President Regulatory Affairs and Special Projects, and the Chairman of the SRC will be notified within 24 hours.

c. A Safety Limit Violation Report shall be prepared by the PORC. This report shall describe (1) applicable circumstances preceding the occurrences, (2) effects of the occurrence upon facility components, systems or structures, and (3) corrective action taken to prevent recurrence.

d. The Safety Limit Violation Report shall be submitted to the Commission, the Chief Nuclear Officer, the Vice President Regulatory Affairs and Special Projects, and the Chairman of the SRC by the Site Executive Officer.

6.8 PROCEDURES **AND PROGRAMS**

6.8.1 Written procedures shall be established, implemented and maintained covering the activities referenced below:

a. The applicable procedures recommended in Appendix "A" of Regulatory Guide 1.33, November, 1972.

b. Refueling operations.

c. Surveillance and test activities of safety related equipment.

d. Security Plan implementation.

e. Emergency Plan implementation.

f. Process Control Program implementation.

g. Offsite Dose Calculation Manual implementation.

b. Each REPORTABLE EVENT shall be reviewed by the PORC and a report submitted by the Site Executive Officer to the Chief Nuclear Officer, Vice President Regulatory Affairs and Special Projects, and the Chairman of the SRC.

6.7 SAFETY LIMIT VIOLATION

6.7.1 The following actions shall be taken in the event a Safety Limit is violated:

a. The reactor shall be shut down and reactor operation shall only be resumed in accordance with the provisions of 10 CFR 50.36(c)(1)(i).

b. The Safety Limit Violation shall be reported immediately to the Commission. The Chief Nuclear Officer, Vice President Regulatory Affairs and Special Projects, and the Chairman of the SRC will be notified within 24 hours.

c. A Safety Limit Violation Report shall be prepared by the PORC. This report shall describe (1) applicable circumstances preceding the occurrences, (2) effects of the occurrence upon facility components, systems or structures, and (3) corrective action taken to prevent recurrence.

d. The Safety Limit Violation Report shall be submitted to the Commission, the Chief Nuclear Officer, the Vice President Regulatory Affairs and Special Projects, and the Chairman of the SRC by the Site Executive Officer.

6.8 PROCEDURES **AND PROGRAMS**

6.8.1 Written procedures shall be established, implemented and maintained covering the activities referenced below:

a. The applicable procedures recommended in Appendix "A" of Regulatory Guide 1.33, November, 1972.

b. Refueling operations.

c. Surveillance and test activities of safety related equipment.

d. Security Plan implementation.

e. Emergency Plan implementation.

f. Process Control Program implementation.

g. Offsite Dose Calculation Manual implementation.

h. Post-accident sampling and analysis and maintenance of required equipment.

i. Collection and analysis or measurement of post-accident radioactive iodine and particulates in plant gaseous effluents and maintenance of required equipment.

j. Fire Protection Program Plan implementation.

k. Radioactive Effluent Control Program implementation.

l. Radiological Environmental Monitoring Program implementation.

6.8.2 Each procedure of 6.8.1 above, and changes thereto, shall be approved prior to implementation by the appropriate responsible member(s) of management, as specified in Technical Specification 6.5.0. They shall also be reviewed periodically as set forth in administrative procedures.

6.8.3 Temporary changes to procedures above may be made provided:

a. The intent of the original procedure is not altered.

b. The change is approved by two members of the plant staff, at least one of whom holds a Senior Reactor Operator's License.

c. The change is documented, and reviewed and approved by the appropriate member(s) of plant management, as specified by Technical Specification 6.5.0 within 14 days of implementation.

6.8.4 The following programs shall be established, implemented, and maintained:

a. <u>Radioactive Effluent Controls Program</u>

A program shall be provided conforming with 10 CFR 50.36a for the control of radioactive effluents and for maintaining the doses to MEMBERS OF THE PUBLIC from radioactive effluents as low as reasonable achievable. The program (1) shall be contained in the ODCM, (2) shall be implemented by site procedures and (3) shall include remedial actions to be taken whenever the program limits are exceeded. The program shall include the following elements:

1. Limitations on the operability of radioactive liquid and gaseous monitoring instrumentation including surveillance tests and setpoint determination in accordance with the methodology in the ODCM.

2. Limitations on the concentrations of radioactive material released in liquid effluents to UNRESTRICTED AREAS conforming to 10 times the concentration values in Appendix B, Table 2, Column 2 to 10 CFR 20

3. Monitoring, sampling, and analysis of radioactive liquid and gaseous effluents pursuant to 10 CFR 20.1302 (except as discussed in 6.8.4.a.2) and with the methodology and parameters in the ODCM.

4. Limitations on the annual and quarterly doses or dose commitment to a MEMBER OF THE PUBLIC from radioactive materials in liquid effluents released from each unit to UNRESTRICTED AREAS conforming to Appendix I to 10 CFR Part 50.

5. Determinations of cumulative and projected dose contributions from radioactive effluents for the current calendar quarter and current calendar year in accordance with the methodology and parameters in the ODCM at least every 31 days.

6. Limitations on the operability and use of the liquid and gaseous effluent treatment systems to ensure that the appropriate portions of these systems are used to reduce releases of radioactivity when the projected doses in a 31 day period would exceed 2 percent of the guidelines for the annual dose or dose commitment conforming to Appendix I to 10 CFR Part 50.

7. Limitations on the dose rate resulting from radioactive material released in gaseous effluents from the site to areas at or beyond the SITE BOUNDARY shall be limited to the following:

   a. For noble gases: Less than or equal to a dose rate of 500 mrems/yr to the total body and less than or equal to a dose rate of 3000 mrems/yr to the skin, and

   b. For iodine-131, tritium, and for all radionuclides in particulate form with half-lives greater than 8 days: Less than or equal to dose rate of 1500 mrems/yr to any organ.

8. Limitations on the annual and quarterly air doses resulting from noble gases released in gaseous effluents from each unit to areas beyond the SITE BOUNDARY conforming to Appendix I to 10 CFR Part 50.

9. Limitations on the annual and quarterly doses to a MEMBER OF THE PUBLIC from iodine-131, tritium, and all radionuclides in particulate form with half-lives greater than 8 days in gaseous effluents released from each unit to areas beyond the SITE BOUNDARY conforming to Appendix I to 10 CFR Part 50.

10. Limitations on the annual dose or dose commitment to any MEMBER OF THE PUBLIC due to releases of radioactivity and to radiation from uranium fuel cycle sources conforming to 40 CFR Part 190.

b. Radiological Environmental Monitoring Program

A program shall be provided to monitor the radiation and radionuclides in the environs of the plant. The program shall provide (1) representative measurements of radioactivity in the highest potential exposure pathways, and (2) verification of the accuracy of the effluent monitoring program and modeling of the environmental exposure pathways. The program shall (1) be contained in the ODCM, (2) conform to the guidance of Appendix I to 10 CFR Part 50, and (3) include the following:

1. Monitoring, sampling, analysis, and reporting of radiation and radionuclides in the environment in accordance with the methodology and parameters in the ODCM.

2. A Land Use Census to ensure that changes in the use of areas at and beyond the SITE BOUNDARY are identified and that modifications to the monitoring program are made if required by the results of this census.

3. Participation in an Interlaboratory Comparison Program to ensure that independent checks on the precision and accuracy of the measurements of radioactive materials in environmental sample matrices are performed as part of the quality assurance program for environmental monitoring.

c. Process Control Program

A program shall be provided to ensure that the processing and packaging of solid radioactive wastes shall be accomplished in compliance with 10 CFR Parts 20, 61 and 71, and Federal and State regulations and other requirements governing the disposal of solid radioactive waste. The program requirements shall be contained in the PCP manual.

6.9 REPORTING REQUIREMENTS

ROUTINE REPORTS

6.9.1 In addition to the applicable reporting requirements of Title 10, Code of Federal Regulations, the following reports shall be submitted to the Regional Administrator - Region 1, unless otherwise noted.

STARTUP REPORT

6.9.1.1 A summary report of appropriate plant testing shall be submitted following (1), an amendment to the license involving a planned increase in power level, (2) installation of fuel that has a different design and (3) modifications that may have significantly altered the nuclear, thermal, or hydraulic performances of the plant. The report shall address each of the tests identified in the FSAR and shall in general include a description of the measured values of the operating conditions or characteristics obtained during the testing and comparison of these values with acceptance criteria. Any corrective actions that were required to obtain satisfactory operation shall also be described. Any additional specific details required in license conditions based on other commitments shall be included in this report.

Amendment No. 11, 12, 59, 65, 88, 116, 157, 159,

6.9.1.2 Startup reports shall be submitted within (1) 90 days following completion of the startup test program, (2) 90 days following resumption or commencement of commercial power operation, or (3) 9 months following initial criticality, whichever is earliest. If the Startup Report does not cover all three events (i.e., initial criticality, completion of startup program, and resumption or commencement of commercial power operation), supplementary reports shall be submitted at least every three months until all three events have been completed.

ANNUAL RADIATION EXPOSURE REPORTS

6.9.1.3 A tabulation on an annual basis of the number of station, utility and other personnel (including contractors), **for whom monitoring was required,** receiving exposures greater than 100 mrem/yr and their associated ~~man-rem~~ **man-rem** exposures according to work and job functions, 1/ e.g., reactor operations and surveillance, inservice inspection, routine maintenance, special maintenance, waste processing, and refueling. The dose assignment to various duty functions may be estimates based on pocket dosimeter, TLD, or film badge measurements. Small exposures totalling less than 20% of the individual total dose need not be accounted for. In the aggregate, at least 80% of the total whole body dose received from external sources shall be assigned to specific major work functions.

MONTHLY OPERATING REPORT

6.9.1.4 Routine reports of operating statistics and shutdown experience, including documentation of all challenges to the PORVs or safety valves, shall be submitted on a monthly basis to the Director, Office of Resource Management, U.S. Nuclear Regulatory Commission, Washington, D.C. 20555, with a copy to the Regional Administrator - Region 1, no later than the 15th of each month following the calendar month covered by the report.

ANNUAL REPORTS

6.9.1.5 A report of specific activity analysis results in which the primary coolant exceeded the limits of Specification 3.1.D. The following information shall be included: (1) Reactor power history starting 48 hours prior to the first sample in which the limit was exceeded; (2) Results of the last isotopic analysis for radioiodine performed prior to exceeding the limit, results of analysis while activity was reduced to less than limit. Each result should include date and time of sampling and the radioiodine concentrations; (3) Clean-up system flow history starting 48 hours prior to the first sample in which the limit was exceeded; (4) Data providing the I-131 concentration and one other radioiodine isotope concentration in microcuries per gram as a function of time for the duration of the specific activity above the steady-state level; and (5) The time duration when the specific activity of the primary coolant exceeded the radioiodine limit.

1/ This tabulation supplements the requirements of 20.~~407~~**2206** of 10 CFR Part 20

~~(5) The time duration when the specific activity of the primary coolant exceeded the radioiodine limit.~~

6.9.1.6 CORE OPERATING LIMITS REPORT

6.9.1.6.a Core operating limits shall be established and documented in the CORE OPERATING LIMITS REPORT before each reload cycle or any remaining part of a reload cycle for the following:

1. Axial Flux Difference limits for Specification 3.10.2.

2. Heat Flux Hot Channel Factor and K(Z) for Specification 3.10.2.

3. Nuclear Enthalpy Rise Hot Channel Factor and Power Factor Multiplier for Specification 3.10.2.

4. Shutdown Bank Insertion Limit for Specification 3.10.4.

5. Control Bank Insertion Limits for Specification 3.10.4.

6.9.1.6.b The analytical methods used to determine the core operating limits shall be those previously reviewed and approved by NRC in:

1. WCAP-9272-P-A, "WESTINGHOUSE RELOAD SAFETY EVALUATION METHODOLOGY," July 1985 (W Proprietary).
   (Methodology for Specification 3.10.4 - Shutdown Bank Insertion Limit, Control Bank Insertion Limits and 3.10.2 - Nuclear Enthalpy Rise Hot Channel Factor.)

2a. WCAP-8385, "POWER DISTRIBUTION CONTROL AND LOAD FOLLOWING PROCEDURES - TOPICAL REPORT," September 1974 (W Proprietary).
   (Methodology for Specification 3.10.2 - Axial Flux Difference (Constant Axial Offset Control).)

Amendment No. 10, 11, 12, 51, 59, 65, 66, 88, 103, 116,

2b. T. M. Anderson to K. Kneil (Chief of Core Performance Branch, NRC) January 31, 1980 -- Attachment: Operation and Safety Analysis Aspects of an Improved Load Follow Package.
(Methodology for Specification 3.10.2 - Axial Flux Difference (Constant Axial Offset Control).)

2c. NUREG-0800, Standard Review Plan, U.S. Nuclear Regulatory Commission, Section 4.3, Nuclear Design, July 1981. Branch Technical Position CPB 4.3-1, Westinghouse Constant Axial Offset Control (CAOC), Rev. 2, July 1981.
(Methodology for Specification 3.10.2 - Axial Flux Difference (Constant Axial Offset Control).)

3a. WCAP-9220-P-A, Rev. 1, "WESTINGHOUSE ECCS EVALUATION MODEL-1981 VERSION," February 1982 (W Proprietary).
(Methodology for Specification 3.10.2 - Heat Flux Hot Channel Factor.)

3b. WCAP-9561-P-A ADD. 3, Rev. 1, "BART A-1: A COMPUTER CODE FOR THE BEST ESTIMATE ANALYSIS OF REFLOOD TRANSIENTS - SPECIAL REPORT: THIMBLE MODELING W ECCS EVALUATION MODEL," July 1986 (W Proprietary).
(Methodology for Specification 3.10.2 - Heat Flux Hot Channel Factor.)

3c. WCAP-10266-P-A Rev. 2, "THE 1981 VERSION OF WESTINGHOUSE EVALUATION MODEL USING BASH CODE," March 1987, (W Proprietary).
(Methodology for Specification 3.10.2 - Heat Flux Hot Channel Factor.)

3d. WCAP-10054-P-A, "SMALL BREAK ECCS EVALUATION MODEL USING NOTRUMP CODE," (W Proprietary).
(Methodology for Specification 3.10.2 - Heat Flux Hot Channel Factor).

3e. WCAP-10079-P-A, "NOTRUMP NODAL TRANSIENT SMALL BREAK AND GENERAL NETWORK CODE," (W Proprietary).
(Methodology for Specification 3.10.2 - Heat Flux Hot Channel Factor).

3f. WCAP-12610, "VANTAGE+ Fuel Assembly Report," (W Proprietary).
(Methodology for Specification 3.10.2 - Heat Flux Hot Channel Factor).

6.9.1.6.c The core operating limits shall be determined so that all applicable limits (e.g., fuel thermal-mechanical limits, core thermal-hydraulic limits, ECCS limits, nuclear limits such as shutdown margin, and transient and accident analysis limits) of the safety limits are met.

6.9.1.6.d The CORE OPERATING LIMITS REPORT, including any mid-cycle revisions or supplements thereto, shall be provided upon issuance, for each reload cycle, to the NRC Document Control Desk with copies to the Regional Administrator and Resident Inspector.

SPECIAL REPORTS

6.9.2 Special reports shall be submitted to the Regional Administrator-Region 1 within the time period specified for each report. These reports shall be submitted covering the activities identified below pursuant to the requirements of the applicable reference specification;

a. Sealed source leakage on excess of limits (Specification 3.9)

b. Inoperable Seismic Monitoring Instrumentation (Specification 4.10)

c. Seismic event analysis (Specification 4.10)

d. Inoperable plant vent sampling, main steam line radiation monitoring or effluent monitoring capability (Table 3.5-4, items 5, 6 and 7)

e. The complete results of the steam generator tube inservice inspection (Specification 4.9.C)

f. Deleted.

g. Release of radioactive effluents in excess of limits (~~Appendix B Specifications 2.3, 2.4, 2.5, 2.6~~ **Technical Specification 6.8.4.a**)

Amendment No. 10, 11, 12, 31, 44, 51, 59, 65, 66, 67, 83, 88, 103, 108, 116, 117, 157,

h. Inoperable containment high-range radiation monitors (Table 3.5-5, Item 24)

i. Radioactive environmental sampling results in excess of reporting levels (~~Appendix B Specification 2.7, 2.8, 2.9~~ **Technical Specification 6.8.4.b**)

j. Operation of Overpressure Protection System (Specification 3.1.A.8.c)

k. Operation of Toxic Gas Monitoring Systems (Specification 3.3.H.3.)

l. Inoperable explosive gas monitoring instrumentation (Appendix B, Technical Specification 1.1.1)

6.10 RECORD RETENTION

6.10.1 The following records shall be retained for at least five years:

a. Records and logs of facility operation covering time interval at each power level.

b. Records and logs of principal maintenance activities, inspection, repair and replacements of principal items of equipment related to nuclear safety.

c. ALL REPORTABLE EVENTS submitted to the Commission.

d. Records of surveillance activities, inspections and calibrations required by these Technical Specifications.

e. Records of changes made to Operating Procedures.

f. Records of radioactive shipments.

g. Records of sealed source and fission detector leak tests and results.

h. Records of annual physical inventory of all source material of record.

i. Records of reactor tests and experiments.

6.10.2 The following records shall be retained for the duration of the Facility Operating License:

a. Records of any drawing changes reflecting facility design modifications made to systems and equipment described in the Final Safety Analysis Report.

b. Records of new and irradiated fuel inventory, fuel transfers and assembly burnup histories.

c. Records of facility radiation and contamination surveys.

d. Records of radiation exposure for all individuals entering radiation control areas.

e. Records of gaseous and liquid radioactive material released to the environs.

f. Records of transient or operational cycles for those facility components designed for a limited number of transient cycles.

g. Records of training and qualifications for current members of the plant staff.

h. Records of in-service inspections performed pursuant to these Technical Specifications.

i. Records of Quality Assurance activities required by the QA manual.

j. Records of reviews performed for changes made to procedures or equipment or reviews of tests and experiments pursuant to 10 CFR 50.59.

k. Records of meetings of the PORC and the SRC.

l. Records for Environmental Qualification which are covered under the provisions of paragraph 6.13.

m. Records of secondary water sampling and water quality.

n. Records of analyses required by the radiological environmental monitoring program that would permit evaluation of the accuracy of the analysis at a later date. This should include procedures effective at specified times and records showing that these procedures were followed.

o. Records of service lives of all safety-related hydraulic snubbers including the date at which the service life commences and associated installation and maintenance records.

p. Records of reviews performed for changes made to the OFFSITE DOSE CALCULATION MANUAL and the PROCESS CONTROL PROGRAM.

6.11 RADIATION AND RESPIRATORY PROTECTION PROGRAM

6.11.1 Procedures for personnel radiation protection shall be prepared consistent with the requirements of 10 CFR ~~Part~~ 20 and shall be approved, maintained and adhered to for all operations involving personnel radiation exposure so as to maintain exposures as far below the limits specified in 10 CFR ~~Part~~ 20 as reasonably achievable. Pursuant to 10 CFR 20.~~103~~**1703**, allowance ~~shall~~ **may** be made for the use of respiratory ~~protective~~ **protection** equipment in conjunction with activities authorized by the operating license for this plant in determining whether individuals in restricted areas are exposed to concentrations in excess of the limits specified in Appendix B, Table ~~I~~ **1**, Column ~~1~~ **3** of 10 CFR 20.

6.12 HIGH RADIATION AREA

6.12.1 In lieu of the "control device" or "alarm signal" required by paragraph 20.~~203~~**1601** of 10 CFR 20, each high radiation area in which the intensity of radiation is ~~1000 mrem/hr or less and 100 mrem/hr or greater~~ **greater than 100 mrem/hr** but less than 1000 mrem/hr**** shall be barricaded and conspicuously posted as a high radiation area and entrance thereto shall be controlled by requiring issuance of a Radiation Work Permit **(RWP)***. Any individual or group of individuals permitted to enter such areas shall be provided or accompanied by one or more of the following:

a. A radiation monitoring device which continuously indicates the radiation dose rate in the area.

b. A radiation monitoring device which continuously integrates the radiation dose rate in the area and alarms when a preset integrated dose is received. Entry into such areas with this monitoring device may be made after the dose rate level in the area has been established and personnel have been made knowledgeable of them.

c. An individual qualified in radiation protection procedures who is equipped with a radiation dose rate monitoring device. This individual shall be responsible for providing positive control over the activities within the area and shall perform periodic radiation surveillance at the frequency specified by the facility Health Physicist in the Radiation Work Permit.

---

* Health Physics Personnel shall be exempt from the RWP issuance requirements for entries into high radiation areas during the performances of their assigned radiation protection duties, provided they comply with approved radiation protection procedures for entry into high radiation areas.

**** Measured at 30 centimeters (12 inches) from the source of radioactivity.**

6.12.2 ~~*The requirements of 6.12.1 above, shall also apply to each high radiation area in which the intensity of radiation is greater than 1000 mrem/hr. In addition, locked doors~~ **In addition to the requirements of 6.12.1 above, areas accessible to individuals with radiation levels such that an individual could receive in 1 hour a dose greater than 1000 mrem**,** shall be provided **with locked doors** to prevent unauthorized entry ~~into such areas~~, and the keys shall be maintained under the administrative control of the Shift Supervisor on duty and/or the plant Radiological and Environmental Services Manager or his designee.

6.13 ENVIRONMENTAL QUALIFICATION

6.13.1 Environmental qualification of electric equipment important to safety shall be in accordance with the provisions of 10 CFR 50.49. Pursuant to 10 CFR 50.49, Section 50.49 (d), the EQ Master List identifies electrical equipment requiring environmental qualification.

6.13.2 Complete and auditable records which describe the environmental qualification method used, for all electrical equipment identified in the EQ Master List, in sufficient detail to document the degree of compliance with the appropriate requirements of 10 CFR 50.49 shall be available and maintained at a central location. Such records shall be updated and maintained current as equipment is replaced, further tested, or otherwise further qualified.

6.14 CONTAINMENT LEAKAGE RATE TESTING PROGRAM

A program shall be established to implement the leakage rate testing of the containment as required by 10 CFR 50.54(o) and 10 CFR 50, Appendix J, Option B, as modified by approved exemptions. This program shall be in accordance with the guidelines contained in Regulatory Guide 1.163, "Performance-Based Containment Leak Test Program, Dated September 1995" as modified by the following exception:

a. ANS 56.8 - 1994, Section 3.3.1: WCCPPS isolation valves are not Type C tested.

The peak calculated primary containment internal pressure for the design basis loss of coolant accident, P_a, is 42.39 psig. The minimum test pressure is 42.42 psig.

The maximum allowable primary containment leakage rate, L_a, at P_a, shall be 0.1% of primary containment air weight per day.

Leakage acceptance criteria are:

a. Containment leakage rate acceptance criterion is $\leq 1.0\ L_a$. During the first unit startup following testing in accordance with this program, the leakage rate acceptance criteria are $\leq 0.60\ L_a$ for the Type B and C tests and $\leq 0.75\ L_a$ for Type A tests;

b. Air lock acceptance criteria are:

   1) Overall the air lock leakage rate is $\leq 0.05\ L_a$ when tested at $\geq P_a$,

   2) For each door, leakage rate is $\leq 0.01\ L_a$ when pressurized to $\geq P_a$.

c. Isolation valves sealed with the service water system leakage rate into containment acceptance criterion is $\leq$0.36 gpm per fan cooler unit

---

* **Health Physics Personnel shall be exempt from the RWP issuance requirements for entries into high radiation areas during the performances of their assigned radiation protection duties, provided they comply with approved radiation protection procedures for entry into high radiation areas.**

** **Measured at 30 centimeters (12 inches) from the source of radioactivity.**

~~1.0 DEFINITIONS~~

~~GASEOUS RADWASTE TREATMENT SYSTEM~~

~~1.1 A GASEOUS RADWASTE TREATMENT SYSTEM is any system designed and installed to reduce radioactive gaseous effluents by collecting primary coolant system offgases from the primary system and providing for delay or holdup for the purpose of reducing the total radioactivity prior to release to the environment.~~

~~MAXIMUM PERMISSIBLE CONCENTRATION (MPC)~~

~~1.2 MPC is that concentration of a radionuclide according to 10 CFR 20 Appendix B, Table II in air (MPCA) or water (MPCW).~~

~~MEMBER(S) OF THE PUBLIC~~

~~1.3 MEMBER(S) OF THE PUBLIC shall include all persons who are not occupationally associated with the plant. This category does not include employees of either utility, their contractors or vendors. Also excluded from this category are persons who enter the site to service equipment or to make deliveries. This category does include persons who use portions of the sit for recreational, occupational or other purposes not associated with the plant.~~

~~OFFSITE DOES CALCULATION MANUAL (ODCM)~~

~~1.4 The OFFSITE DOSE CALCULATION MANUAL shall contain the current methodology and parameters used in the calculation of offsite doses due to radioactive gaseous and liquid effluents, in the calculation of gaseous and liquid effluent monitoring alarm/trip setpoints, and in the conduct of the environmental radiological monitoring program.~~

~~PROCESS CONTROL PROGRAM (PCP)~~

~~1.5 The PROCESS CONTROL PROGRAM shall contain the current formula, sampling, analyses, tests, and determinations to be made to ensure that the processing and packaging of solid radioactive wastes based on demonstrated processing of actual or simulated wet solid wastes will be accomplished in such a way to assure compliance with 10 CFR Part 20, 10 CFR Part 71 and Federal and State regulations and other requirements governing the disposal of the radioactive waste.~~

~~PURGE - PURGING~~

~~1.6 PURGE or PURGING is the controlled process of discharging air or gas from a confinement in such a manner that replacement air or gas is required to purify the confinement.~~

~~SITE BOUNDARY~~

~~1.7 The SITE BOUNDARY (see Figure 5.8 1) shall be that line beyond which the land is neither owned, nor leased, nor otherwise controlled by either site licensee.~~

~~SOLIDIFICATION~~

~~1.8 SOLIDIFICATION shall be the conversion of wet wastes into a form that meets shipping and burial ground requirements.~~

~~SOURCE CHECK~~

~~1.9 A SOURCE CHECK shall be the qualitative assessment of channel response when the channel sensor is exposed to a Source of increased radioactivity.~~

~~UNRESTRICTED AREA~~

~~1.10 An UNRESTRICTED AREA (see Figure 5.8-1) shall be any area at or beyond the SITE BOUNDARY access to which is not controlled by either site licensee for purposes of protection of individuals from exposure to radiation and radioactive materials, or any area within the SITE BOUNDARY used for residential quarters or for industrial, commercial, institutional, and/or recreational purposes. The UNRESTRICTED AREA boundary may coincide with the exclusion (fenced) area boundary, as defined in 10 CFR 100.3(a), but the UNRESTRICTED AREA does not include areas over water bodies. The concept of UNRESTRICTED AREAS, established at or beyond the SITE BOUNDARY, is utilized in the LIMITING CONDITIONS FOR OPERATION to keep levels of radioactive materials in liquid and gaseous effluents as low as is reasonably achievable, pursuant to 10 CFR 50.36a.~~

~~VENTILATION EXHAUST TREATMENT SYSTEM~~

~~1.11 A VENTILATION EXHAUST TREATMENT SYSTEM is any system designed and installed to reduce gaseous radioiodine or radioactive material in particulate form in effluents by passing ventilation or vent exhaust gases through charcoal absorbers and/or HEPA filters for the purpose of removing iodines or particulates from the gaseous exhaust stream prior to the release to the environment. Such a system is not considered to have any effect on noble gas effluents. Engineered Safety Feature (ESF) atmospheric cleanup systems are not considered to be VENTILATION EXHAUST TREATMENT SYSTEM components.~~

~~VENTING~~

~~1.12 VENTING is the controlled process of discharging air or gas from a confinement in such a manner that replacement air or gas is not provided or required during VENTING. Vent, used in system names, does not imply a VENTING process.~~

~~2.1 Radioactive Liquid Effluent Monitoring Instrumentation~~

~~APPLICABILITY~~

~~Applies to the operating status of the radioactive liquid effluent monitoring instrumentation as shown in Table 2.1-1.~~

~~OBJECTIVE~~

~~To define the operating status of the radioactive liquid effluent monitoring instrumentation.~~

~~SPECIFICATION~~

~~A. The radioactive liquid effluent monitoring instrumentation channels shown in Table 2.1-1 shall be OPERABLE with their alarm/trip setpoints set to ensure that the limits of Specification 2.3.1 are not exceeded. The alarm/trip setpoints of these channels shall be determined and adjusted in accordance with the methodology and parameters in the OFFSITE DOSE CALCULATION MANUAL (ODCM).~~

~~B. With a radioactive liquid effluent monitoring instrumentation channel alarm/trip setpoint less conservative than required by the above specification, without delay suspend the release of radioactive liquid effluents monitored by the affected channel, or declare the channel inoperable, or change the setpoint so it is acceptably conservative.~~

~~C. With less than the minimum number of radioactive liquid effluent monitoring instrumentation channels OPERABLE, take the ACTION shown in Table 2.1-1. Exert best efforts to return the instruments to OPERABLE status within 30 days and if unsuccessful, explain in the next Semiannual Radioactive Effluent Release Report why the inoperability was not corrected in a timely manner.~~

~~TABLE 2.1 1~~

~~RADIOACTIVE LIQUID EFFLUENT MONITORING INSTRUMENTATION~~		
~~INSTRUMENT~~	~~MINIMUM CHANNELS OPERABLE*~~	~~ACTION~~
~~1. GROSS RADIOACTIVITY MONITORS PROVIDING ALARM AND AUTOMATIC TERMINATION OF RELEASE~~		
~~a. Liquid Radwaste Effluent Line**~~	~~(1)~~	~~1~~
~~b. Steam Generator Blowdown Effluent Line~~	~~(1)~~	~~2~~
~~2. GROSS BETA OR GAMMA RADIOACTIVITY MONITORS PROVIDING ALARM BUT NOT PROVIDING AUTOMATIC TERMINATION OF RELEASE~~		
~~a. Service Water System Effluent Line~~	~~(1)~~	~~3~~
~~3. FLOW RATE MEASUREMENT DEVICES~~		
~~a. Liquid Radwaste Effluent Line~~	~~(1)~~	~~4~~
~~b. Steam Generator Blowdown Effluent Line~~	~~(1)~~	~~4~~

~~* During release by the pathway, channels shall be operable and in service during such release on a continuous, uninterrupted basis. Except that outages are permitted, within the time frame and limitations of the specified action, for the purpose of maintenance of required tests, checks and calibration.~~

~~** The condensate polisher regenerative waste release path does not need to be monitored unless a primary to secondary side leak is present.~~

~~TABLE 2.1-1 (Continued)~~

~~RADIOACTIVE LIQUID EFFLUENT MONITORING INSTRUMENTATION~~		
~~INSTRUMENT~~	~~MINIMUM CHANNELS OPERABLE~~	~~ACTION~~
~~4. RADIOACTIVITY RECORDERS*~~		
~~a. Liquid Radwaste Effluent Line~~	~~(1)~~	~~1~~
~~b. Steam Generator Blowdown Effluent Line~~	~~(1)~~	~~2~~
~~5. TANK LEVEL INDICATING DEVICES**~~		
~~a. Refueling Water Storage Tank~~	~~(1)~~	~~5~~
~~b. Primary Water Storage Tank~~	~~(1)~~	~~5~~
~~c. Monitor Tank #31~~	~~(1)~~	~~5~~
~~d. Monitor Tank #32~~	~~(1)~~	~~5~~

~~* Required only if alarm/trip set point is based on recorder controller.~~

~~** Tanks included in this specification are those outdoor tanks that are not surrounded by liners, dikes, or walls capable of holding the tank contents and do not have tank overflows and surrounding area drains connected to the liquid radwaste treatment system.~~

~~**TABLE 2.1-1** *(Continued)*~~

~~**TABLE NOTATION**~~

~~ACTION 1 — With the number of channels OPERABLE less than required by the Minimum Channels OPERABLE requirement, effluent releases may continue provided that prior to initiating a release:~~

~~a. At least two independent samples are analyzed in accordance with Specification 3.3.1A, **and**~~

~~b. At least two technically qualified members of the Facility Staff independently verify the release rate calculations and discharge line valving.~~

~~Otherwise, suspend release of radioactive effluents via this pathway.~~

~~ACTION 2 — With the number of channels OPERABLE less than required by the Minimum Channels OPERABLE requirement, effluent releases via this pathway may continue provided grab samples are analyzed either for principal gamma emitters or for gross radioactivity (beta or gamma) at a lower limit of detection of at least 5×10^{-7} microcuric/ml (as Cs 137):~~

~~a. At least once per 12 hours when the specific activity of the secondary coolant is greater than 0.01 microcuric/ gram DOSE EQUIVALENT I 131.~~

~~b. At least once per 24 hours when the specific activity of the secondary coolant is less than or equal to 0.01 microcuric/gram DOSE EQUIVALENT I 131.~~

~~ACTION 3 — With the number of channels OPERABLE less than required by the Minimum Channels OPERABLE requirement, effluent releases via this pathway may continue provided that, at least once per 12 hours, grab samples are collected and analyzed for gross radioactivity (beta or gamma) at a lower limit of detection of at least 5×10^{-7} microcuric/ml (as Cs 137).~~

~~ACTION 4 — With the number of channels OPERABLE less than required by the Minimum Channels OPERABLE requirement, effluent releases via this pathway may continue provided the flow rate is estimated at least once per 4 hours during actual releases. Pump performance curves may be used to estimate flow.~~

~~ACTION 5 — With the number of channels OPERABLE less than required by the Minimum Channels OPERABLE requirement, liquid additions to this tank may continue provided the tank liquid level is estimated during all liquid additions to the tank.~~

~~2.2~~1/2.1 ~~RADIOACTIVE GASEOUS EFFLUENT~~ MONITORING INSTRUMENTATION

1.1.1 EXPLOSIVE GAS MONITORING INSTRUMENTATION

LCO:

The ~~radioactive gaseous effluent~~ **explosive gas** monitoring instrumentation channels shown in Table ~~2.2-1~~ **1.1.1-1** shall be OPERABLE with their alarm/trip setpoints set to ensure that the limits of **Appendix B Technical Specification** ~~2.4.1~~ **1.3.1** are not exceeded. ~~The alarm/trip setpoints of these channels shall be determined and adjusted in accordance with the methodology and parameters in the ODCM.~~ **[This wording previously contained under "SPECIFICATION"]**

APPLICABILITY: ~~Applies to the operating status of the radioactive gaseous effluent monitoring instrumentation~~ **As shown in Table** ~~2.2-1~~ **1.1.1-1.**

~~SPECIFICATION~~ **ACTIONS:**

~~The radioactive gaseous effluent monitoring instrumentation channels shown in Table 2.2-1 shall be OPERABLE with their alarm/trip setpoints set to ensure that the limits of Specification 2.4.1 are not exceeded. The alarm/trip setpoints of these channels shall be determined and adjusted in accordance with the methodology and parameters in the ODCM.~~

A. **With** ~~a radioactive gaseous effluent~~ **an explosive gas monitoring instrumentation** channel alarm/trip setpoint less conservative than required by the above Specification, ~~without delay suspend the release of radioactive gaseous effluents monitored by the affected channel or~~ **declare the channel inoperable and take the ACTION shown in Table 1.1.1-1,** ~~or change the setpoint so it is acceptably conservative.~~

B. With less than the minimum number of ~~radioactive gaseous monitoring~~ **explosive gas** monitoring instrumentation channels OPERABLE, take the ACTION shown in Table ~~2.2-1~~ **1.1.1-1**. Exert best efforts to return the instruments to OPERABLE status within 30 days and, if unsuccessful, ~~explain in the next Semiannual Radioactive Effluent Release Report~~ **prepare and submit to the Commission, pursuant to Appendix B Technical Specification 4.3.1, a Special Report** to explain why the inoperability was not corrected within this time frame.

2.1.1 SURVEILLANCE REQUIREMENTS

~~Radioactive gaseous effluent~~ **The explosive gas** monitoring instrumentation channels shall be demonstrated OPERABLE by performance of the CHANNEL CHECK, ~~SOURCE CHECK~~ **and** CHANNEL CALIBRATION ~~and CHANNEL FUNCTIONAL TEST~~ operations at the frequencies shown in Table ~~3.2-1~~ **2.1.1-1**. **[This wording previously contained in Section 3.2 of Appendix B.]**

TABLE ~~2.2-1~~ 1.1.1-1

~~RADIOACTIVE GASEOUS EFFLUENT~~ **EXPLOSIVE GAS** MONITORING INSTRUMENTATION			
INSTRUMENT	MINIMUM CHANNELS OPERABLE	APPLICABILITY	ACTION
~~1. WASTE GAS HOLDUP SYSTEM~~			
~~a. Noble Gas Activity Monitor Providing Alarm~~	~~(1)~~	~~**~~	~~6~~
~~12~~. WASTE GAS HOLDUP SYSTEM EXPLOSIVE GAS MONITORING SYSTEM			
a. Hydrogen Monitor	(1)	* ~~**~~	1~~0~~
b. Oxygen Monitor	(1)	* ~~**~~	1
~~3. CONDENSER AIR EJECTOR~~			
~~a. Noble Gas Activity Monitor~~	~~(1)~~	~~*~~	~~8~~
~~4. ENVIRONMENTAL RELEASE POINTS (PLANT VENT***, ADMIN. BUILDING, CONTROLLED AREA, RAD MACHINE SHOP)~~			
~~a. Noble Gas Activity Monitor~~	~~(1)~~	~~*~~	~~8, 12~~
~~b. Iodine Sampler~~	~~(1)~~	~~*~~	~~11~~
~~c. Particulate Sampler~~	~~(1)~~	~~*~~	~~11~~
~~d. Flow Rate Monitor~~	~~(1)~~	~~*~~	~~7~~
~~e. Sampler Flow Rate Monitor~~	~~(1)~~	~~*~~	~~7~~
~~5. CONTAINMENT PURGE SYSTEM~~			
~~a. Containment Noble Gas Activity Monitor Providing Alarm and Automatic Termination of Release~~	~~(1)~~	~~*~~	~~9~~

~~* Channels shall be operable and in service on a continuous basis during release via this pathway, except that outages are permitted, within the time frame of the specified action for the purpose of maintenance and performance of required tests, checks and calibrations.~~

~~**~~ During waste gas holdup system operation (treatment for primary system offgases).

TABLE 2.1.1-1

EXPLOSIVE GAS MONITORING INSTRUMENTATION SURVEILLANCE REQUIREMENTS			
INSTRUMENT	**CHANNEL CHECK**	**CHANNEL CALIBRATION**	**MODES IN WHICH SURVEILLANCE REQUIRED**
1. WASTE GAS HOLDUP SYSTEM EXPLOSIVE GAS MONITORING SYSTEM			
a. Hydrogen Monitor	D	M(1)	*
b. Oxygen Monitor	D	M(2)	*

TABLE NOTATION

* During waste gas holdup system operation (treatment for primary system off gases).

(1) The CHANNEL CALIBRATION shall include the use of standard gas samples containing:

1. Less than or equal to two volume percent hydrogen,

and

2. Greater than or equal to four volume percent hydrogen,

(2) The CHANNEL CALIBRATION shall include the use of standard gas samples containing:

1. Less than or equal to one volume percent oxygen,

and

2. Greater than or equal to four volume percent oxygen.

D Daily
M Monthly
[This information previously contained in section 3.2 of the RETS]

~~(con't)~~

~~*** This will also monitor releases from the Vent Header, Auxiliary Building Vents, Fuel Storage Building Vents, and the Rad Waste Area Vent.~~

~~**TABLE 2.2-1 (Continued)**~~

~~**TABLE NOTATION**~~

~~ACTION 6 With the number of channels OPERABLE less than that required by the Minimum Channels OPERABLE requirement, the radioactive content of the receiving gas decay tank shall be determined daily to ensure compliance with 2.4.6.~~

~~ACTION 7 With the number of channels OPERABLE less than required by the Minimum Channels OPERABLE requirement, effluent releases via this pathway may continue provided the flow rate is estimated at least once per 4 hours.~~

~~ACTION 8 With the number of channels OPERABLE less than required by the Minimum Channels OPERABLE requirement, effluent releases via this pathway may continue provided grab samples are taken at least once per 12 hours and these samples are analyzed for gross activity within 24 hours.~~

~~ACTION 9 With the number of channels OPERABLE less than required by the Minimum Channels OPERABLE requirement, immediately suspend PURGING of radioactive effluents via this pathway. During containment building ventilation in the cold shutdown condition, continuous monitoring and automatic termination of release is not required. One continuous monitor at the final release point (plant vent) is sufficient.~~

ACTION ~~10~~1 - With the number of channels OPERABLE one less than required by the Minimum Channels OPERABLE requirement, operation of this system may continue provided grab samples of waste tank on reuse or receipt are taken and analyzed daily. With both channels inoperable operation may continue provided grab samples of waste tank on reuse or receipt are taken and analyzed as follows:

a) Every 4 hours during degassing operations,

b) Daily during other operations.

[This information will now be on page 1/2-2 of the revised RETS.]

~~ACTION 11 With the number of channels OPERABLE less than required by the Minimum Channels OPERABLE requirement, effluent releases via the effected pathway may continue provided samples are continuously collected with auxiliary sampling equipment as required in Table 3.4-1.~~

~~TABLE 2.2-1 (CONTINUED)~~

~~TABLE NOTATION~~

~~ACTION 12 — With the number of channels OPERABLE less than that required by the Minimum Channels OPERABLE requirement for the plant vent, the contents of the radwaste gas decay tanks may be released to the environment provided that prior to initiating the release:~~

~~a. At least two independent samples of the tank contents are analyzed~~

~~and,~~

~~b. At least two technically qualified members of the facilities staff independently verify the release rate calculations and discharge valve lineup.~~

~~2.3~~1/2.2 RADIOACTIVE LIQUID EFFLUENTS

~~2.3.1 LIQUID EFFLUENT CONCENTRATION~~

~~APPLICABILITY~~

~~Applies at all times to the concentration of radioactive material released in liquid effluents.~~

~~OBJECTIVE~~

~~To define those limits on concentrations of radioactive material released in liquid effluents.~~

~~SPECIFICATION~~

~~A. The concentration of radioactive material released in liquid effluents to UNRESTRICTED AREAS shall be limited to the concentrations specified in 10 CFR 20.106(a) for radionuclides other than dissolved or entrained noble gases as calculated under 10 CFR 20.106(a). For dissolved or entrained noble gases, the concentration shall be limited to 2×10^{-4} microcuries/ml.~~

~~B. With the concentration of radioactive material released in liquid effluents to UNRESTRICTED AREAS exceeding these limits, without delay restore the concentration to within these limits.~~

~~2.3.2 DOSE FROM LIQUID EFFLUENTS~~

~~APPLICABILITY~~

~~Applies at all times to the dose from radioactive material released in liquid effluents~~

~~OBJECTIVE~~

~~To define those limits on the dose from radioactive material released in liquid effluents.~~

~~SPECIFICATIONS~~

~~A. The dose or dose commitment to a MEMBER OF THE PUBLIC from radioactive materials in liquid effluents released, from each reactor unit, to UNRESTRICTED AREAS shall be limited:~~

~~1. During any calendar quarter to less than or equal to 1.5 mrems to the total body and to less than or equal to 5 mrems to any organ,~~

~~and~~

~~2. During any calendar year to less than or equal to 3 mrems to the total body and to less than or equal to 10 mrems to any organ.~~

~~B. With the calculated dose from the release of radioactive materials in liquid effluents exceeding any of the above limits, in lieu of a Licensee Event Report, prepare and submit to the Commission within 30 days, pursuant to Specification 5.3.2, a Special Report that identifies the cause(s) for exceeding the limit(s) and defines the corrective actions that have been taken to reduce the releases and the proposed corrective actions to be taken to assure that subsequent releases will be in compliance with the above limits. This Special Report shall also include (1) the results of radiological analyses of the drinking water source and (2) the radiological impact on finished drinking water supplies with regard to the requirements of 40 CFR Part 141.*~~

~~* Applicable only if drinking water supply is taken from the receiving water body within 3 miles of the plant discharge. In the case of river sited plants this is 3 miles downstream only.~~

~~2.3.3 LIQUID RADWASTE TREATMENT SYSTEM~~

~~APPLICABILITY~~

~~Applies at all times to the operation of the liquid radwaste treatment system.~~

~~OBJECTIVE~~

~~To define those conditions necessary for the operation of the liquid radwaste treatment system.~~

~~SPECIFICATION~~

~~A. The liquid radwaste treatment system shall be used when the projected doses due to the liquid effluent, from each reactor unit, to UNRESTRICTED AREAS would exceed 0.06 mrem to the total body or 0.2 mrem to any organ in a 31 day period.~~

~~B. With radioactive liquid waste being discharged without treatment and in excess of the above limits, in lieu of a Licensee Event Report, prepare and submit to the Commission within 30 days pursuant to Specification 5.3.2 a Special Report that includes the following information:~~

~~1. Explanation of why liquid radwaste was being discharged without treatment, identification of any inoperable equipment or subsystems, and the reason for the inoperability,~~

~~2. Action(s) taken to restore the inoperable equipment to OPERABLE status, and~~

~~3. Summary description of action(s) taken to prevent a recurrence.~~

~~2.3.4~~1.2.1 RADIOACTIVE LIQUID **EFFLUENT** HOLDUP TANKS*

LCO:

The quantity of radioactive material contained in each of the following unprotected outdoor tanks shall be limited to less than or equal to 10 curies, excluding tritium and dissolved or entrained noble gases.

a. Refueling Water Storage Tank**
b Primary Water Storage Tank
c. 31 Monitor Tank
d. 32 Monitor Tank
e. Outside Temporary Tank***

[This wording previously contained under "SPECIFICATION"]

APPLICABILITY: **At all times.**

~~Applies at all times to the quantity of radioactive material contained in the liquid holdup tanks.~~

~~SPECIFICATIONS~~ **ACTION:**

With the quantity of radioactive material in any of the above listed tanks exceeding the above limit, immediately suspend all additions of radioactive material to the tank. **Within** 48 hours reduce the tank contents to within the limit, and describe the events leading to this condition in the next ~~Semiannual~~ **Annual** Radioactive Effluent Release Report.

2.2.1 SURVEILLANCE REQUIREMENTS

The quantity of radioactive material contained in each of the listed tanks shall be determined to be less than or equal to 10 curies excluding tritium and dissolved or entrained noble gases, by analyzing a representative sample of the tank's contents at least once per month when radioactive materials are being added to the tank. **[This wording previously contained in Section 3.3.4 of Appendix B.]**

---

* Tanks included in this specification are those outdoor tanks that are not surrounded by liners, dikes, or walls capable of holding the tank contents and that do not have tank overflows and surrounding area drains connected to the liquid radwaste treatment system.

** **After refueling operations, liquid from the reactor cavity will be sampled for radioactive material content prior to being pumped into the tank.**

*** **Liquid will be sampled for radioactive content prior to being pumped into the tank.**

~~2.4~~1/2.3 RADIOACTIVE GASEOUS EFFLUENTS

~~2.4.1 GASEOUS EFFLUENT DOSE RATES~~

~~APPLICABILITY~~

~~Applies at all times to the dose rate due to radioactive materials released in gaseous effluents.~~

~~OBJECTIVE~~

~~To define those limits on the dose rate due to radioactive materials released in gaseous effluents.~~

~~SPECIFICATIONS~~

~~A. The dose rate due to radioactive materials released in gaseous effluents from the site to areas at and beyond the SITE BOUNDARY shall be limited to the following:~~

~~1. For noble gases: Less than or equal to 500 mrems/yr to the total body and less than or equal to 3000 mrems/yr to the skin,~~

~~and~~

~~2. For iodine-131, for tritium, and for all radionuclides in particulate form with half lives greater than 8 days: Less than or equal to 1500 mrems/yr to any organ.~~

~~B. With the dose rate(s) exceeding the above limits, without delay restore the release rate to within the above limit(s).~~

~~2.4.2 DOSE FROM NOBLE GASES~~

~~APPLICABILITY~~

~~Applies at all times to air dose due to noble gases released in gaseous effluents.~~

~~OBJECTIVE~~

~~To define those limits on the air dose due to noble gases released in gaseous effluents.~~

~~SPECIFICATION~~

~~A. The air dose due to noble gases released in gaseous effluents, from each reactor unit, to areas at and beyond the SITE BOUNDARY shall be limited to the following:~~

~~1. During any calendar quarter: Less than or equal to 5 mrads for gamma radiation and less than or equal to 10 mrads for beta radiation.~~

~~and,~~

~~2. During any calendar year: Less than or equal to 10 mrads for gamma radiation and less than or equal to 20 mrads for beta radiation.~~

~~B. With the calculated air dose from radioactive noble gases in gaseous effluents exceeding any of the above limits, in lieu of a Licensee Event Report, prepare and submit to the Commission within 30 days, pursuant to Specification 5.3.2, a Special Report that identifies the cause(s) for exceeding the limit(s) and defines the corrective actions that have been taken to reduce the releases and the proposed corrective actions to be taken to assure that subsequent releases will be in compliance with the above limits.~~

~~2.4.3 DOSE FROM IODINE 131, TRITIUM, AND RADIONUCLIDES IN PARTICULATE FORM~~

~~APPLICABILITY~~

~~Applies at all times to the dose due to iodine-131, tritium and all radionuclides in particulate form with half lives greater than 8 days in gaseous effluents.~~

~~OBJECTIVE~~

~~To define those limits on the dose due to iodine 131, tritium and all radionuclides in particulate form with half lives greater than 8 days in gaseous effluents.~~

~~SPECIFICATION~~

~~A. The dose to a MEMBER OF THE PUBLIC from iodine 131, tritium and all radionuclides in particulate form with half lives greater than 8 days in gaseous effluents released, from each reactor unit, to areas at and beyond the SITE BOUNDARY shall be limited to the following:~~

~~1. During any calendar quarter: Less than or equal to 7.5 mrems to any organ~~

~~and,~~

~~2. During any calendar year: Less than or equal to 15 mrems to any organ.~~

~~B. With the calculated dose from the release of iodine 131, tritium and radionuclides in particulate form with half lives greater than 8 days, in gaseous effluents exceeding any of the above limits, in lieu of a Licensee Event Report, prepare and submit to the Commission within 30 days, pursuant to Specification 5.3.2 a Special Report that identifies the cause(s) for exceeding the limit and defines the corrective actions that have been taken to reduce the releases and the proposed corrective actions to be taken to assure that subsequent releases will be in compliance with the above limits.~~

~~2.4.4 GASEOUS RADWASTE TREATMENT SYSTEM~~

~~APPLICABILITY~~

~~Applies at all times to the operation of the gaseous radwaste treatment system.~~

~~OBJECTIVE~~

~~To define those conditions necessary for the operation of the gaseous radwaste treatment system and the ventilation exhaust treatment system.~~

~~SPECIFICATION~~

~~A. The appropriate GASEOUS RADWASTE TREATMENT SYSTEM and the appropriate VENTILATION EXHAUST TREATMENT SYSTEM shall be used to reduce radioactive materials in gaseous waste prior to their discharge when the projected gaseous effluent air doses due to gaseous effluent releases, from each reactor unit, to areas at and beyond the SITE BOUNDARY would exceed 0.2 mrad for gamma radiation and 0.4 mrad for beta radiation in a 31 day period. The VENTILATION EXHAUST TREATMENT SYSTEM shall be used to reduce radioactive materials in gaseous waste prior to their discharge when the projected doses due to gaseous effluent releases, from each reactor unit, to areas at and beyond the SITE BOUNDARY would exceed 0.3 mrem to any organ in a 31 day period.~~

~~B. With gaseous waste being discharged without treatment and in excess of the above limits, in lieu of a Licensee Event Report, prepare and submit to the Commission within 30 days, pursuant to Specification 5.3.2, a Special Report that includes the following information:~~

~~1. Explanation of why gaseous radwaste was being discharged without treatment, identification of any inoperable equipment or subsystems, and the reason for the inoperability,~~

~~2. Action(s) taken to restore the inoperable equipment to OPERABLE status,~~

~~and~~

~~3. Summary description of action(s) taken to prevent a recurrence.~~

~~2.4.5~~1.3.1 EXPLOSIVE GAS MIXTURE (Hydrogen rich systems not designed to withstand a hydrogen explosion)

LCO:

~~To Limit~~ **The** concentration of oxygen in the waste gas holdup system **shall be limited** to less than or equal to 2% by volume whenever the hydrogen concentration exceeds 4% by volume.
[This wording previously contained under "OBJECTIVE"]

APPLICABILITY: **At all times.**

~~Applies at all times to the concentration of oxygen in the waste gas holdup system, whenever H_2 concentration exceeds 4% by volume.~~

~~OBJECTIVE~~

~~To limit the concentration of oxygen in the waste gas holdup system to less than or equal to 2% by volume whenever the hydrogen concentration exceeds 4% by volume.~~

~~SPECIFICATION~~ **ACTION:**

A. With the concentration of oxygen in the waste gas holdup system greater than 2% by volume but less than or equal to 4% by volume, reduce the oxygen concentration to the above limits within 48 hours.

B. With the concentration of oxygen in the waste gas holdup system greater than 4% by volume and the hydrogen concentration greater than 2% by volume, immediately suspend all additions of waste gases to this portion of the system and reduce the concentration of oxygen to less than or equal to 2% by volume ~~without delay~~.

2.3.1 SURVEILLANCE REQUIREMENTS

The concentrations of hydrogen and oxygen in the waste gas holdup system shall be determined to be within the above limits by monitoring the waste gases in the waste gas holdup system with the hydrogen and oxygen monitors required OPERABLE by ~~Table 2.2-1 of Specification 2.2~~ **Appendix B Technical Specification Table 1.1.1-1. [This wording previously contained in Section 3.4.5 of Appendix B.]**

~~2.4.6~~**1.3.2** GAS STORAGE TANKS

LCO:

~~To limit the~~ **The** quantity of radioactivity contained in each gas storage tank **shall be limited** to less than or equal to 50,000 curies noble gases (considered as Xe-133).
[This wording previously contained under "OBJECTIVE"]

APPLICABILITY: **At all times.**
~~Applies at all times to the quantity of radioactivity contained in each gas storage tank.~~

~~OBJECTIVE~~

~~To limit the quantity of radioactivity contained in each gas storage tank to less than or equal to 50,000 curies noble gases (considered as Xe-133).~~

~~SPECIFICATION~~ **ACTION:**

With the quantity of radioactive material in any gas storage tank exceeding the above limit, immediately suspend all additions of radioactive material to the tank ~~and~~. Within 48 hours reduce the tank contents to within the limit, **and describe the events leading to this condition in the next Annual Radioactive Effluent Release Report.**

2.3.2 SURVEILLANCE REQUIREMENTS

The quantity of radioactive material contained in each gas storage tank shall be determined to be within the limit at least once per 24 hours when radioactive materials are being added to the tank in accordance with the methodology and parameters in the ODCM. **[This wording previously contained in Section 3.4.6 of Appendix B.]**

~~2.5 SOLID RADIOACTIVE WASTE~~

~~APPLICABILITY~~

~~Applies at all times to the operation of the solid radwaste system.~~

~~OBJECTIVE~~

~~To ensure the safe operation of the solid radwaste system.~~

~~SPECIFICATION~~

~~A. Ensure that the solid radwaste system will be used in accordance with a PROCESS CONTROL PROGRAM to process wet radioactive wastes to meet shipping and burial ground requirements.~~

~~B. With the provisions of the PROCESS CONTROL PROGRAM not satisfied suspend shipments of defectively processed or defectively packaged solid radioactive wastes from the site.~~

~~2.6 TOTAL DOSE~~

~~APPLICABILITY~~

~~Applies at all times to the annual dose or dose commitment from releases of radioactivity and to radiation from uranium fuel cycle sources.~~

~~OBJECTIVE~~

~~To limit the annual dose or dose commitment due to releases of radioactivity or to radiation from uranium fuel cycle sources.~~

~~SPECIFICATION~~

~~A. Limit the annual (calendar year) dose or dose commitment to any MEMBER OF THE PUBLIC due to releases of radioactivity and to radiation from uranium fuel cycle sources to less than or equal to 25 mrems to the total body or any organ, except the thyroid, which shall be limited to less than or equal to 75 mrems.~~

~~B. With calculated doses from the release of radioactive materials in liquid or gaseous effluents exceeding twice the limits of Specification 2.3.2.A, 2.4.2.A or 2.4.3.A, calculations should be made including direct radiation contributions from the reactor units and from outside storage tanks to determine whether the above limits identified in the Objective of Specification 2.6 have been exceeded.~~

~~C. If such is the case in lieu of a Licensee Event Report, prepare and submit to the Commission within 30 days, pursuant to Specification 5.3.2, a Special Report that defines the corrective action to be taken to reduce subsequent releases to prevent recurrence of exceeding the above limits and includes the schedule for achieving conformance with the above limits. This Special Report, as defined in 10 CFR Part 20.405c, shall include an analysis that estimates the radiation exposure (dose) to a MEMBER OF THE PUBLIC from uranium fuel cycle sources, including all effluent pathways and direct radiation, for the calendar year that includes the release(s) covered by this report. It shall also describe levels of radiation and concentrations of radioactive material involved, or the cause of the exposure levels or concentrations. If the estimated dose(s) exceeds the above limits and if the release condition resulting in violation of 40 CFR Part 190 has not already been corrected, the Special Report shall include a request for a variance in accordance with the provisions of 40 CFR Part 190. Submittal of the report is considered a timely request, and a variance is granted until staff action on the request is complete.~~

~~2.7 RADIOLOGICAL ENVIRONMENTAL MONITORING PROGRAM~~

~~APPLICABILITY~~

~~Applies at all times to the performance of the radiological environmental monitoring program.~~

~~OBJECTIVE~~

~~To ensure the proper performance of the radiological environmental monitoring program.~~

~~SPECIFICATION~~

~~A. With the radiological environmental monitoring program not being conducted as specified in Table 2.7-1, in lieu of a Licensee Event Report, prepare and submit to the Commission, in the Annual Radiological Environmental Operating Report required by Specification 5.3.3.2, a description of the reasons for not conducting the program as required and the plans for preventing a recurrence.~~

~~B. With the level of radioactivity as the result of plant effluents in an environmental sampling medium at a specified location exceeding the reporting levels of Table 2.7-2 when averaged over any calendar quarter, in lieu of a Licensee Event Report, prepare and submit, to the Commission within 30 days, pursuant to Specification 5.3.2, a Special Report that identifies the cause(s) for exceeding the limit(s) and defines the corrective actions to be taken to reduce radioactive effluents so that the potential annual dose to A MEMBER OF THE PUBLIC is less than the calendar year limits of Specifications 2.3.2, 2.4.2, and 2.4.3. When more than one of the radionuclides in Table 2.7-2 are detected in the sampling medium, this report shall be submitted if:~~

$$\frac{\text{concentration (1)}}{\text{reporting level (1)}} + \frac{\text{concentration (2)}}{\text{reporting level (2)}} + \ldots \geq 1.0$$

~~When radionuclides other than those in Table 2.7-2 are detected and are the result of plant effluents, this report shall be submitted if the potential annual dose to A MEMBER OF THE PUBLIC is equal to or greater than the calendar year limits of Specifications 2.3.2, 2.4.2, and 2.4.3. This report is not required if the measured level of radioactivity was not the result of plant effluents; however, in such an event, the condition shall be reported and described in the Annual Radiological Environmental Operating Report.~~

~~C. With milk or fresh leafy vegetable samples unavailable from one or more of the sample locations required by Table 2.7-1, identify locations for obtaining replacement samples and add them to the radiological environmental monitoring program within 30 days. The specific locations from which samples were unavailable may then be deleted from the monitoring program. In lieu of a Licensee Event Report and pursuant to Specification~~

~~5.3.3.1, identify the cause of the unavailability of samples and identify the new location(s) for obtaining replacement samples in the next Semiannual Radioactive Effluent Release Report and also include in the report a revised figure(s) and table for the ODCM reflecting the new location(s).~~

~~TABLE 2.7-1~~

~~RADIOLOGICAL ENVIRONMENTAL MONITORING PROGRAM~~			
~~Exposure Pathway and/or Sample~~	~~Number of Representative Samples and Sample Locations[a]~~	~~Sampling and Collection Frequency~~	~~Type and Frequency of Analysis~~
~~1. Direct Radiation[b]~~	~~40 routine monitoring stations (DR1-DR40) with two or more dosimeters for measuring and recording integrated dose continuously placed as follows:~~ ~~an inner ring of stations, one in each meteorological sector in the general area of the site boundary (DR1-DR16)~~ ~~an outer ring of stations, one in each meteorological sector in the 6 to 8 km range from the site (DR17-DR32)~~ ~~the balance of the stations (DR33-DR40) to be placed in special interest areas and in one area to serve as a control station.~~	~~Quarterly~~	~~Gamma dose quarterly~~

~~TABLE 2.7-1 (Continued)~~

~~RADIOLOGICAL ENVIRONMENTAL MONITORING PROGRAM~~			
~~Exposure Pathway and/or Sample~~	~~Number of Representative Samples and Sample Locations[a]~~	~~Sampling and Collection Frequency~~	~~Type and Frequency of Analysis~~
~~2. Airborne~~ ~~Radioiodine and Particulates~~	~~Samples from 5 locations (A1-A5):~~ ~~3 samples (A1-A3) from close to the 3 site boundary locations in different sectors, of the highest calculated annual average ground level D/Q.~~ ~~1 sample (A4) from the vicinity of a community having the highest calculated annual average ground level D/Q.~~ ~~1 sample (A5) from a control location as for example 15-30 km distant and in the least prevalent wind direction.~~	~~Continuous sampler operation with collection weekly, or more frequently if required by dust loading~~	~~Radioiodine Cannister:~~ ~~I-131 analysis weekly.~~ ~~Particulate sampler:~~ ~~Gross beta radioactivity analysis following filter change;[d]~~ ~~Gamma isotopic analysis[e] of composite (by location) quarterly~~
~~3. Waterborne~~ ~~a. Surface~~	~~1 sample upstream[f] (Wa1)~~ ~~1 sample downstream (Wa2)~~	~~Composite sample over 1 month period[g]~~	~~Gamma isotopic analysis[e] monthly. Composite for tritium analysis quarterly.~~

~~TABLE 2.7-1 (Continued)~~

~~RADIOLOGICAL ENVIRONMENTAL MONITORING PROGRAM~~			
~~Exposure Pathway and/or Sample~~	~~Number of Representative Samples and Sample Locations[a]~~	~~Sampling and Collection Frequency~~	~~Type and Frequency of Analysis~~
~~3. Waterborne~~			
~~b. Drinking~~	~~1 sample (Wb1) of the nearest surface drinking supply~~	~~Grab monthly~~	~~Gross beta and gamma isotopic analysis monthly. Composite for tritium analysis quarterly.~~
~~c. Sediment from Shoreline~~	~~2 samples (Wc1-Wc2)~~ ~~1 sample (Wc1) from downstream area with existing or potential recreational value.~~ ~~1 control sample (Wc2) from an upstream area.~~	~~2 annually at least 90 days apart~~	~~Gamma isotopic analysis[e]~~
~~4. Ingestion~~ ~~a. Milk~~	~~Samples from milking animals in 3 locations (Ia1-Ia3) within 5 km distance having the highest dose potential. If there are none, then 1 sample from milking animals in each of 3 areas (Ia1-Ia3) between 5 to 8 km distant if available where doses are calculated to be greater than 1 mrem per yr[h].~~	~~Semimonthly when animals are on pasture monthly at other times.~~	~~Gamma isotopic[e] and I-131 analysis semimonthly when animals are on pasture; monthly at other times.~~

~~(con't)~~

~~RADIOLOGICAL ENVIRONMENTAL MONITORING PROGRAM~~			
~~Exposure Pathway and/or Sample~~	~~Number of Representative Samples and Sample Locations[a]~~	~~Sampling and Collection Frequency~~	~~Type and Frequency of Analysis~~
~~4. Ingestion~~ ~~a. Milk~~	~~1 sample from milking animals at a control location (Ia4), 15-30 km distant and in the least prevalent wind direction.~~	~~Concurrently with indicator locations.~~	

~~TABLE 2.7-1 (Continued)~~

~~RADIOLOGICAL ENVIRONMENTAL MONITORING PROGRAM~~			
~~Exposure Pathway and/or Sample~~	~~Number of Representative Samples and Sample Locations[a]~~	~~Sampling and Collection Frequency~~	~~Type and Frequency of Analysis~~
~~4. Ingestion~~ ~~b. Fish and Invertebrates~~	~~2 samples (Ib1, Ib2)~~ ~~1 sample (Ib1) of each of 2 species commercially and/or recreationally important species of fish or invertebrate in the vicinity of the discharge when available.~~ ~~1 sample (Ib2) of each of 2 commercially and or recreationally important species (the same species as in Ib1 if available) from an area not influenced by plant discharge.~~	~~Sample in season, or semiannually if they are not seasonal~~	~~Gamma isotopic analysis[e]~~
~~c. Food Products~~	~~Samples of 3 different kinds of broad leaf vegetation (edible or inedible) grown nearest each of two different offsite locations of highest predicted annual average ground level D/Q if milk sampling is not performed (Ic1-Ic2).~~	~~Monthly when available~~	~~Gamma isotopic[e] and I-131 analysis~~
	~~1 sample of each of the similar broad leaf vegetation grown 15-30 km distant in the least prevalent wind direction if milk sampling is not performed (Ic3).~~	~~Monthly when available~~	~~Gamma isotopic[e] and I-131 analysis.~~

~~RADIOLOGICAL ENVIRONMENTAL MONITORING PROGRAM~~			
~~Exposure Pathway and/or Sample~~	~~Number of Representative Samples and Sample Locations[a]~~	~~Sampling and Collection Frequency~~	~~Type and Frequency of Analysis~~
~~c. Food Products~~	~~1 sample of each of the similar broad leaf vegetation grown 15-30 km distant in the least prevalent wind direction if milk sampling is not performed (Ic3).~~	~~Monthly when available~~	~~Gamma isotopic[e] and I-131 analysis.~~

~~TABLE 2.7-1 *(Continued)*~~

~~TABLE NOTATION~~

~~[a]The code letters in parenthesis (e.g., DR1, A1, etc.) refer to sample locations as specified in the ODCM. Specific parameters of distance and direction sector from the centerline of one reactor, and additional description where pertinent, shall be provided for each and every sample location in table 2.7-1 in a table and figure(s) in the ODCM. Refer to NUREG-0133, "Preparation of Radiological Effluent Technical Specifications for Nuclear Power Plant," October 1978, and to Radiological Assessment Branch Technical Position, Revision 1, November 1979. Deviations are permitted from the required sampling schedule if specimens are unobtainable due to hazardous conditions, seasonal unavailability, malfunction of automatic sampling equipment and other legitimate reasons. If specimens are unobtainable due to sampling equipment malfunction, every effort shall be made to complete corrective action prior to the end of the next sampling period. All deviations from the sampling schedule shall be documented in the Annual Radiological Environmental Operating Report pursuant to Specification 5.3.3.2. It is recognized that, at times, it may not be possible or practicable to continue to obtain samples of the media of choice at the most desired location or time. In these instances suitable alternative media and locations may be chosen for the particular pathway in question and appropriate substitutions made within 30 days in the radiological environmental monitoring program. In lieu of a Licensee Event Report and pursuant to Specification 5.3.3.1, identify the cause of the unavailability of samples for that pathway and identify the new location(s) for obtaining replacement samples in the next Semiannual Radioactive Effluent Release Report and also include in the report a revised figure(s) and table for the ODCM reflecting the new location(s).~~

~~[b]One or more instruments, such as a pressurized ion chamber, for measuring and recording dose rate continuously may be used in place of, or in addition to, integrating dosimeters. For the purposes of this table, a thermoluminescent dosimeter (TLD) is considered to be one phosphor; two or more phospors in a packet are considered as two or more dosimeters. Film badges shall not be used as dosimeters for measuring direct radiation.~~

~~[c]The purpose of this sample is to obtain background information. If it is not practical to establish control locations in accordance with the distance and wind direction criteria, other sites that provide valid background data may be substituted.~~

~~[d]Airborne particulate sample filters shall be analyzed for gross beta radioactivity 24 hours or more after sampling to allow for radon and thoron daughter decay. If gross beta activity in air particulate samples is greater than ten times the yearly mean, of the previous calendar year, of control samples, gamma isotopic analysis shall be performed on the individual samples.~~

~~TABLE 2.7-1 *(Continued)*~~

~~TABLE NOTATION~~

~~[e]Gamma isotopic analysis means the identification and quantification of gamma emitting radionuclides that may be attributable to the effluents from the facility.~~

~~[f]"Upstream" sample shall be taken near the intake structures as described in the ODCM. The "downstream sample" shall be taken from the mixing zone at the diffuser to the discharge canal.~~

~~[g]A composite sample is one in which the quantity (aliquot) of liquid sampled shall be collected at time intervals that are very short (e.g., hourly) relative to the compositing period (e.g., monthly) in order to assure obtaining a representative sample.~~

~~[h]The dose shall be calculated for the maximum organ and age group using the methodology and parameters in the ODCM.~~

~~TABLE 2.7-2~~

~~REPORTING LEVELS FOR RADIOACTIVITY CONCENTRATIONS IN ENVIRONMENTAL SAMPLES~~

~~REPORTING LEVELS~~					
~~Analysis~~	~~Water (pCi/ℓ)~~	~~Airborne Particulate or Gases (pCi/m³)~~	~~Fish (pCi/kg, wet)~~	~~Milk (pCi/ℓ)~~	~~Food Products (pCi/kg, wet)~~
~~H-3~~	~~20,000*~~				
~~Mn-54~~	~~1,000~~		~~30,000~~		
~~Fe-59~~	~~400~~		~~10,000~~		
~~Co-58~~	~~1,000~~		~~30,000~~		
~~Co-60~~	~~300~~		~~10,000~~		
~~Zn-65~~	~~300~~		~~20,000~~		
~~Zr-Nb-95~~	~~400~~				
~~I-131~~	~~2**~~	~~0.9~~		~~3~~	~~100~~
~~Cs-134~~	~~30~~	~~10~~	~~1,000~~	~~60~~	~~1,000~~
~~Cs-137~~	~~50~~	~~20~~	~~2,000~~	~~70~~	~~2,000~~
~~Ba-La-140~~	~~200~~			~~300~~	

~~* For drinking water samples. This is 40 CFR Part 141 value. If no drinking water pathway exists, a value of 30,000 pCi/ℓ may be used.~~

~~** If no drinking water pathway exists, a value of 20 pCi/ℓ may be used.~~

~~2.8 LAND USE CENSUS~~

~~APPLICABILITY~~

~~Applies at all times to the land use census, which identifies the nearest milk animal, the nearest residence and the nearest garden.~~

~~OBJECTIVE~~

~~To conduct a land use census.~~

~~SPECIFICATION~~

~~A. Conduct a land use census which identifies within a distance of 8 km (5 miles) the location in each of the 16 meteorological sectors of the nearest milk animal, the nearest residence and the nearest garden of greater than 50m² (500 ft²) producing broad leaf vegetation. Broad leaf vegetation sampling of at least three different kinds of vegetation may be performed at the site boundary in each of two different direction sectors with the highest predicted D/Qs in lieu of the garden census. Specifications for broad leaf vegetation sampling in Table 2.7 1.4c shall be followed, including analysis of control samples.~~

~~B. With a land use census identifying a location(s) that yields a calculated dose or dose commitment greater than the values currently being calculated in Specification 3.4.3, in lieu of a Licensee Event Report, identify the new location(s) in the next Semiannual Radioactive Effluent Release Report, pursuant to Specification 5.3.3.1.~~

~~C. With a land use census identifying a location(s) that yields a calculated dose or dose commitment (via the same exposure pathway) two times greater than at a location from which samples are currently being obtained in accordance with Specification 2.7, add the new location(s) to the radiological environmental monitoring program within 30 days. The sampling location(s), excluding the control station location, having the lowest calculated dose or dose commitment(s), via the same exposure pathway, may be deleted from this monitoring program after (October 31) of the year in which this land use census was conducted. In lieu of a Licensee Event Report and pursuant to Specification 5.3.3.1. Identify the new location(s) in the next Semiannual Radioactive Effluent Release Report and also include in the report a revised figure(s) and table for the ODCM reflecting the new location(s).~~

~~2.9 INTERLABORATORY COMPARISON PROGRAM~~

~~APPLICABILITY~~

~~Applies to the performance of the environmental Interlaboratory Comparison Program.~~

~~OBJECTIVE~~

~~To conduct an Interlaboratory Comparison Program.~~

~~SPECIFICATION~~

~~A. Perform analyses on radioactive materials supplied as part of an Interlaboratory Comparison Program that has been approved by the Commission.~~

~~B. With analyses not being performed as required above, report the corrective actions taken to prevent a recurrence to the Commission in the Annual Radiological Environmental Operating Report pursuant to Specification 5.3.3.2.~~

~~3.0 SURVEILLANCE REQUIREMENTS~~

~~3.1 RADIOACTIVE LIQUID EFFLUENT MONITORING INSTRUMENTATION SURVEILLANCE REQUIREMENTS~~

~~APPLICABILITY~~

~~Applies to testing of radioactive liquid effluent monitoring instrumentation.~~

~~OBJECTIVE~~

~~To verify that the subject systems will respond promptly and perform their design functions, if required.~~

~~SPECIFICATION~~

~~Each radioactive liquid effluent monitoring instrumentation channel shall be demonstrated OPERABLE by performance of the CHANNEL CHECK, SOURCE CHECK, CHANNEL CALIBRATION and CHANNEL FUNCTIONAL TEST operations at the frequencies shown in Table 3.1-1.~~

~~TABLE 3.1-1~~

~~RADIOACTIVE LIQUID EFFLUENT MONITORING INSTRUMENTATION SURVEILLANCE REQUIREMENTS~~

~~INSTRUMENT~~	~~CHANNEL CHECK~~	~~SOURCE CHECK~~	~~CHANNEL CALIBRATION~~	~~CHANNEL FUNCTIONAL TEST~~
~~1. GROSS RADIOACTIVITY MONITORS PROVIDING ALARM AND AUTOMATIC TERMINATION OF RELEASE~~				
~~a. Liquid Radwaste Effluent Line (R-18 and R-61*****)~~	~~D*~~	~~D*~~	~~24M(3)~~	~~Q(1)*~~
~~b. Steam Generator Blowdown Effluent Line (R-19)~~	~~D*~~	~~M*~~	~~24M(3)~~	~~Q(1)*~~
~~2. GROSS BETA OR GAMMA RADIOACTIVITY MONITORS PROVIDING ALARM BUT NOT PROVIDING AUTOMATIC TERMINATION OF RELEASE~~				
~~a. Service Water System Effluent Line (R-16A and R-16B)~~	~~D*~~	~~M*~~	~~24M(3)~~	~~Q(2)*~~
~~b. Service Water System Effluent Line (R-23)~~	~~D*~~	~~M*~~	~~18M(3)~~	~~Q(2)*~~
~~3. FLOW RATE MEASUREMENT DEVICES~~				
~~a. Liquid Radwaste Effluent Line~~	~~D(4)~~	~~N.A.~~	~~18M~~	~~Q~~
~~b. Steam Generator Blowdown Effluent Line~~	~~D(4)~~	~~N.A.~~	~~24M~~	~~N.A.~~
~~4. RADIOACTIVITY RECORDERS~~				
~~a. Liquid Radwaste Effluent Line~~	~~D*~~	~~N.A.~~	~~24M~~	~~Q****~~
~~b. Steam Generator Blowdown Effluent Line~~	~~D*~~	~~N.A.~~	~~24M~~	~~Q****~~
~~5. TANK LEVEL INDICATING DEVICES***~~				
~~a. Refueling Water Storage Tank~~	~~D**~~	~~N.A.~~	~~18M~~	~~18M~~
~~b. Primary Water Storage Tank~~	~~D**~~	~~N.A.~~	~~24M~~	~~24M~~
~~c. Monitor Tank #31~~	~~D**~~	~~N.A.~~	~~18M~~	~~18M~~
~~d. Monitor Tank #32~~	~~D**~~	~~N.A.~~	~~18M~~	~~18M~~

~~TABLE NOTATIONS~~

~~* When this pathway is utilized for releases, with frequency no more than indicated.~~

~~** During liquid additions to the tank.~~

~~Amendment No. 51, 133, 137, 144~~

~~**TABLE 3.1-1** *(Continued)*~~

~~*** Tanks included in this specification are those outdoor tanks that are not surrounded by liners, dikes, or walls capable of holding the tank contents and do not have tank overflows and surrounding area drains connected to the liquid radwaste treatment system.~~

~~**** Required only if alarm/trip setpoint is based on recorder-controller.~~

~~***** The condensate polisher regenerative waste release path does not need to be monitored unless a primary to secondary side leak is present.~~

~~(1) The CHANNEL FUNCTIONAL TEST shall also demonstrate that automatic isolation of this pathway and control room alarm annunciation occur if the following condition exists:~~

~~1. Instrument indicates measured levels above the alarm/trip setpoint.~~

~~(2) The CHANNEL FUNCTIONAL TEST shall also demonstrate that control room alarm annunciation occurs if any of the following conditions exists:~~

~~1. Instrument indicates measured levels above the alarm setpoint.~~

~~2. Instrument controls not set in operate mode.~~

~~(3) Radioactive calibration standards used for channel calibrations shall be traceable to the National Bureau of Standards or an aliquot of calibration solution shall be analyzed with instrumentation which is calibrated with NBS traceable standards. (Standards from suppliers who participate in measurement assurance activities with NBS are acceptable).~~

~~(4) CHANNEL CHECK shall consist of verifying indication of flow during periods of release. CHANNEL CHECK shall be made at least once per 24 hours on days on which continuous, periodic, or batch releases are made.~~

~~D Daily~~
~~M Monthly~~
~~N.A. Not Applicable~~
~~Q Quarterly~~
~~18M At least once per 18 months.~~
~~24M At least once per 24 months.~~

~~Amendment No. 51, 133, 137~~

~~3.2 RADIOACTIVE GASEOUS EFFLUENT MONITORING INSTRUMENTATION SURVEILLANCE REQUIREMENTS~~

~~APPLICABILITY~~

~~Applies to testing of radioactive gaseous effluent monitoring instrumentation.~~

~~OBJECTIVE~~

~~To verify that the subject systems will respond promptly and perform their design functions when required.~~

~~SPECIFICATIONS~~

~~Radioactive gaseous effluent monitoring instrumentation channels shall be demonstrated OPERABLE by performance of the CHANNEL CHECK, SOURCE CHECK, CHANNEL CALIBRATION and CHANNEL FUNCTIONAL TEST operations at the frequencies shown in Table 3.2-1.~~

~~TABLE 3.2-1~~

~~RADIOACTIVE GASEOUS EFFLUENT MONITORING INSTRUMENTATION SURVEILLANCE REQUIREMENTS~~

~~INSTRUMENT~~	~~CHANNEL CHECK~~	~~SOURCE CHECK~~	~~CHANNEL CALIBRATION~~	~~FUNC-TIONAL TEST~~	~~MODES IN WHICH SURVEIL-LANCE REQUIRED~~
~~1. WASTE GAS HOLDUP SYSTEM~~					
~~a. Noble Gas Activity Monitor Providing Alarm (R-20)~~	~~D~~	~~M~~	~~24M(2)~~	~~Q(1)***~~	~~*~~
~~2. WASTE GAS HOLDUP SYSTEM EXPLOSIVE GAS MONITORING SYSTEM~~					
~~a. Hydrogen Monitor~~	~~D~~	~~N.A.~~	~~M(3)~~	~~N.A.~~	~~**~~
~~b. Oxygen Monitor~~	~~D~~	~~N.A.~~	~~M(4)~~	~~N.A.~~	~~**~~
~~3. CONDENSER AIR EJECTOR~~					
~~a. Noble Gas Activity Monitor (R-15)~~	~~D~~	~~M~~	~~24M(2)~~	~~Q(1)***~~	~~*~~
~~4. ENVIRONMENTAL RELEASE POINTS (PLANT VENT, ADMIN. BUILDING CONTROLLED AREA. VENT, RAD. MACHINE SHOP VENT)~~					
~~a. Noble Gas Activity Monitor (R-14, R-27, R-46, and R-59)~~	~~D~~	~~M~~	~~24M(2)~~	~~Q(1)***~~	~~*~~
~~b. Iodine Sampler~~	~~W~~	~~N.A.~~	~~N.A.~~	~~N.A.~~	~~*~~
~~c. Particulate Sampler~~	~~W~~	~~N.A.~~	~~N.A.~~	~~N.A.~~	~~*~~
~~d. Flow Rate Monitor~~	~~D~~	~~N.A.~~	~~18M~~	~~Q~~	~~*~~
~~e. Sampler Flow Rate Monitor~~	~~D~~	~~N.A.~~	~~18M~~	~~N.A.~~	~~*~~
~~5. CONTAINMENT PURGE SYSTEM~~					
~~a. Containment Noble Gas Activity Monitor Providing Alarm and Automatic Termination of Release (R-12)~~	~~D~~	~~M~~	~~24M(2)~~	~~Q(1)***~~	~~*~~

~~TABLE NOTATIONS~~

~~* Surveillance is required at all times except when monitor has been removed from service in accordance with Table 2.2-1.~~

~~Amendment No. 51, 177, 137~~

~~TABLE 3.2-1 *(Continued)*~~

~~** During waste gas holdup system operation (treatment for primary system off gases).~~

~~*** Will not include operation of automatic control functions.~~

~~(1) The CHANNEL FUNCTIONAL TEST shall also demonstrate that control room alarm annunciation occurs if any of the following conditions exists:~~

~~1. Instrument indicates measured levels above the alarm setpoint.~~

~~2. Instrument controls not set in operate mode.~~

~~(2) Radioactive Calibration Standards used for channel calibrations shall be traceable to the National Bureau of Standards or an aliquot of calibration gas shall be analyzed with instrumentation which is calibrated with NBS traceable standards (standards from suppliers which participate in measurement assurance activities with NBS are acceptable).~~

~~(3) The CHANNEL CALIBRATION shall include the use of standard gas samples containing:~~

~~1. Less than or equal to two volume percent hydrogen,~~

~~**and**~~

~~2. Greater than or equal to four volume percent hydrogen,~~

~~(4) The CHANNEL CALIBRATION shall include the use of standard gas samples containing:~~

~~1. Less than or equal to one volume percent oxygen,~~

~~**and**~~

~~2. Greater than or equal to four volume percent oxygen.~~

~~D Daily~~
~~M Monthly~~
~~N.A. Not Applicable~~
~~Q Quarterly~~
~~18M At least once per 18 months~~
~~24M At least once per 24 months~~

~~3.3.1 LIQUID EFFLUENT CONCENTRATION SURVEILLANCE REQUIREMENTS~~

~~APPLICABILITY~~

~~Applies to the sampling of radioactive liquid wastes.~~

~~OBJECTIVE~~

~~To verify that the concentration of radioactive wastes to be released, are acceptable.~~

~~SPECIFICATION~~

~~A. Radioactive liquid wastes shall be sampled and analyzed according to the sampling and analysis program of Table 3.3-1.~~

~~B. The results of the radioactivity analyses shall be used in accordance with the methodology and parameters in the ODCM to assure that the concentrations at the point of release are maintained within the limits of Specification 2.3.1.~~

~~TABLE 3.3-1~~

~~RADIOACTIVE LIQUID WASTE SAMPLING AND ANALYSIS PROGRAM~~

~~Liquid Release Type~~	~~Sampling Frequency~~	~~Minimum Analysis Frequency~~	~~Type of Activity Analysis~~	~~Lower Limit of Detection (LLD)[a] (uCi/ml)~~
~~A. Batch Waste Release Tanks[b]~~	~~P Each Batch~~	~~P Each Batch~~	~~Principal Gamma Emitters[c]~~	~~5×10^{-7}~~
			~~Mo-99 Ce-144~~	~~5×10^{-6}~~
			~~I-131~~	~~1×10^{-6}~~
	~~P One Batch/M~~	~~M~~	~~Dissolved & Entrained Gases (Gamma Emitters)~~	~~1×10^{-5}~~
	~~P Each Batch~~	~~M Composite[d]~~	~~H-3~~	~~1×10^{-5}~~
			~~Gross Alpha~~	~~1×10^{-7}~~
	~~P Each Batch~~	~~Q Composite[d]~~	~~Sr-89, Sr-90~~	~~5×10^{-8}~~
			~~Fe-55~~	~~1×10^{-6}~~
~~B. Continuous Releases[e,f]~~	~~3/W Composite[d]~~	~~W Composite[d]~~	~~Principal Gamma Emitters~~	~~5×10^{-7}~~
			~~Mo-99, Ce-144~~	~~5×10^{-6}~~
			~~I-131~~	~~1×10^{-6}~~
	~~M Grab Sample~~	~~M~~	~~Dissolved & Entrained Gases (Gamma Emitters)~~	~~1×10^{-5}~~
	~~W Composite[d]~~	~~M Composite[d]~~	~~H-3~~	~~1×10^{-5}~~
			~~Gross Alpha~~	~~1×10^{-7}~~
	~~W Composite[d]~~	~~Q Composite[d]~~	~~Sr-89, Sr-90~~	~~5×10^{-8}~~
			~~Fe-55~~	~~1×10^{-6}~~

~~3.3-2 (con't)~~

~~Frequency Notation~~
~~B = Batch~~
~~W = Weekly~~
~~M = Monthly~~
~~Q = Quarterly~~

~~TABLE 3.3-1 *(Continued)*~~

~~TABLE NOTATION~~

~~[a]The LLD is defined, for purposes of these specifications, as the smallest concentration of radioactive material in a sample that will yield a net count, above system background, that will be detected with 95% probability with only 5% probability of falsely concluding that a blank observation represents a "real" signal. Equations used in the calculation of the LLD for a particular measurement system are presented in the ODCM.~~

~~It should be recognized that the LLD is defined as an a priori (before the fact) limit representing the capability of a measurement system and not as an a posteriori (after the fact) limit for a particular measurement.~~

~~[b]A batch release is the discharge of liquid wastes of a discrete volume. Prior to samplings for analyses, each batch shall be isolated, and then thoroughly mixed to assure representative sampling. (Steam Generators may be considered a batch release for reporting purpose during shutdown condition but should be analyzed in accordance with the continuous release section of table.)~~

~~[c]The principal gamma emitters for which the LLD specification applies exclusively are the following radionuclides: Mn-54, Fe-59, Co-58, Co-60, Zn-65, Cs-134, Cs-137, and Ce-141. This list does not mean that only these nuclides are to be monitored. Other gamma peaks that are identifiable, together with those of the above nuclides, shall also be analyzed and reported in the Semiannual Radioactive Effluent Release Report pursuant to Specification 5.3.3.1.~~

~~[d]A composite sample is one in which the quantity of liquid sampled is proportional to the quantity of liquid waste discharged and in which the method of sampling employed results in a specimen that is representative of the liquids released.~~

~~[e]A continuous release is the discharge of liquid wastes of a nondiscrete volume, e.g., from a volume of a system that has an input flow during the continuous release.~~

~~[f]Steam generator feedwater shall be monitored for principal gamma emitters when steam generator blowdown exceeds $3x10^{-5}$ uci/ml and releases to the environment. This activity concentration is evaluated in accordance with the methodology presented in the ODCM.~~

~~3.3.2 DOSE FROM LIQUID EFFLUENT SURVEILLANCE REQUIREMENTS~~

~~APPLICABILITY~~

~~Applies to the determination of the dose from radioactive material released in liquid effluents.~~

~~OBJECTIVE~~

~~To verify that the dose from radioactive material released in liquid effluents is within the limits.~~

~~SPECIFICATION~~

~~Cumulative dose contributions from liquid effluents for the current calendar quarter and the current calendar year shall be determined in accordance with the methodology and parameters in the ODCM at least once per month.~~

~~3.3.3~~ ~~LIQUID RADWASTE TREATMENT SYSTEM SURVEILLANCE REQUIREMENTS~~

~~APPLICABILITY~~

~~Applies to the determination of the dose due to liquid releases.~~

~~OBJECTIVE~~

~~To determine if liquid radwaste treatment system operation is required.~~

~~SPECIFICATION~~

~~Doses due to liquid releases from each reactor unit to UNRESTRICTED AREAS shall be projected at least once per month in accordance with the methodology and parameters in the ODCM.~~

~~3.3.4 LIQUID HOLDUP TANKS SURVEILLANCE REQUIREMENTS*~~

~~APPLICABILITY~~

~~Applies to analyzing the radioactive material in the liquid holdup tanks.~~

~~OBJECTIVE~~

~~To determine the quantity of radioactive material in the following tanks:~~

~~1. Refueling Water Storage Tank**~~
~~2. Primary Water Storage Tank~~
~~3. 31 Monitor Tank~~
~~4. 32 Monitor Tank~~
~~5. Outside Temporary Tank***~~

~~SPECIFICATION~~

~~The quantity of radioactive material contained in each of the listed tanks shall be determined to be less than or equal to 10 curies excluding tritium and dissolved or entrained noble gases, by analyzing a representative sample of the tank's contents at least once per month when radioactive materials are being added to the tank.~~

~~* Tanks included in this specification are those outdoor tanks that are not surrounded by liners, dikes, or walls capable of holding the tank contents and that do not have tank overflows and surrounding area drains connected to the liquid radwaste treatment system.~~

~~** After refueling operations, liquid from the reactor cavity will be sampled for radioactive material content prior to being pumped into the tank.~~

~~*** Liquid will be sampled for radioactive content prior to being pumped into the tank.~~

~~3.4 RADIOACTIVE GASEOUS EFFLUENTS SURVEILLANCE REQUIREMENTS~~

~~3.4.1 GASEOUS EFFLUENT DOSE RATE SURVEILLANCE REQUIREMENTS~~

~~APPLICABILITY~~

~~Applies to the determination of the dose rates due to radioactive materials released in gaseous effluents.~~

~~OBJECTIVE~~

~~To determine if the dose rates due to radioactive materials released in gaseous effluents are within limits.~~

~~SPECIFICATIONS~~

~~A. The dose rate due to noble gases in gaseous effluents shall be determined to be within the above limits in accordance with the methodology and parameters in the ODCM.~~

~~B. The dose rate due to iodine-131, tritium, and all radionuclides in particulate form with half lives greater than 8 days in gaseous effluents shall be determined to be within the above limits in accordance with the methodology and parameters in the ODCM by obtaining representative samples and performing analyses in accordance with the sampling and analysis program specified in Table 3.4-1.~~

~~TABLE 3.4-1~~

~~RADIOACTIVE GASEOUS WASTE SAMPLING AND ANALYSIS PROGRAM~~

~~Gaseous Release Type~~	~~Sampling Frequency~~	~~Minimum Analysis Frequency~~	~~Type of Activity Analysis~~	~~Lower Limit of Detection (LLD[a]) (uCi/cc)~~
~~A. Waste Gas Storage~~	~~B Each Tank Grab Sample~~	~~B Each Tank~~	~~Principal Noble Gas Gamma Emitters[b]~~	~~$1x10^{-4}$~~
~~B. Containment Purge~~	~~B Each PURGE Grab Sample~~	~~B Each PURGE~~	~~Principal Noble Gas Gamma Emitters[b]~~	~~$1x10^{-4}$~~
~~C. Condenser Air Ejector~~	~~Grab Sample~~	~~M~~	~~Principal Noble Gas Gamma Emitters[b]~~	~~$1x10^{-4}$~~
~~D. Environmental Release Points (Plant Vent, Admin. Bldg. Controlled Area Vent, Radioactive Machine Shop Vent)~~	~~M[c] Grab Sample~~	~~M[c]~~	~~Principal Noble Gas Gamma Emitters[b]~~	~~$1x10^{-4}$~~
	~~M[d,e] Grab~~	~~M[d,e]~~	~~H-3~~	~~$1x10^{-6}$~~
	~~Continuous[f]~~	~~W[g] Charcoal Sample~~	~~I-131~~	~~$1x10^{-12}$~~
	~~Continuous[f]~~	~~W[g] Particulate Sample~~	~~Principal Gamma Emitters[b] (I-131, Others)~~	~~$1x10^{-11}$~~
	~~Continuous[f]~~	~~M Composite Particulate Sample~~	~~Gross Alpha~~	~~$1x10^{-11}$~~
	~~Continuous[f]~~	~~Q Composite Particulate Sample~~	~~Sr-89, Sr-90~~	~~$1x10^{-11}$~~
	~~Continuous[f]~~	~~Noble Gas Monitor~~	~~Noble Gases Gross Beta or Gamma~~	~~$1x10^{-6}$~~

~~Frequency Notation~~

~~B = Batch~~
~~W = Weekly~~
~~M = Monthly~~
~~Q = Quarterly~~

~~TABLE 3.4-1 *(Continued)*~~

~~TABLE NOTATION~~

~~[a]The LLD is defined, for purposes of these specifications, as the smallest concentration of radioactive material in a sample that will yield a net count, above system background, that will be detected with 95% probability with only 5% probability of falsely concluding that a blank observation represents a "real" signal. Equations used in the calculation of the LLD for a particular measurement system are presented in the ODCM.~~

~~It should be recognized that the LLD is defined as an a priori (before the fact) limit representing the capability of a measurement system and not as an a posteriori (after the fact) limit for a particular measurement.~~

~~[b]The principal gamma emitters for which the LLD specification applies exclusively are the following radionuclides: Kr-87, Kr-88, Xe-133, Xe-133m, Xe-135, and Xe-138 for gaseous emissions and Mn-54, Fe-59, Co-58, Co-60, Zn-65, Mo-99, CS-134, Cs-137, Ce-141 and Ce-144 for particulate emissions. This list does not mean that only these nuclides are to be monitored. Other gamma peaks that are identifiable, together with those of the above nuclides, shall also be analyzed and reported in the Semiannual Radioactive Effluent Release Report pursuant to Specification 5.3.3.1.~~

~~[c]The main plant vent shall be sampled and analyzed following shutdown, startup, or a THERMAL POWER change (within one hour) exceeding 15 percent of RATED THERMAL POWER unless either (1) analysis shows that the DOSE EQUIVALENT I-131 concentration in the primary coolant has not increased more than a factor of 3: **or** (2) the noble gas activity monitor shows that effluent activity has not increased by more than a factor of 3. Under no circumstances would iodine samples be required more than once per day. Plant vent Tritium grab samples shall be taken at least once per 24 hours when the refueling canal is flooded unless continuous sampling equipment is in use.~~

~~[d]Plant vent tritium grab samples shall be taken at least once per 24 hours when the refueling canal is flooded unless continuous sampling equipment is in use.~~

~~[e]Plant vent tritium grab samples shall be taken at least once per 7 days from the ventilation exhaust from the spent fuel pool area, whenever spent fuel is in the spent fuel pool unless continuous sampling equipment is in use.~~

~~[f]The ratio of the sample flow rate to the sampled steam flow rate shall be known for the time period covered by each dose or dose rate calculation made in accordance with Specification 2.4.1, 2.4.2 and 2.4.3.~~

~~[g]Samples shall be changed at least once per 7 days and analyses shall be completed within 48 hours after changing, or after removal~~

~~from sampler. Sampling shall also be performed at least once per 24 hours for at least 7 days following each shutdown, startup or THERMAL POWER change exceeding 15 percent of RATED THERMAL POWER in one hour and analyses shall be completed within 48 hours of changing. When samples collected for 24 hours are analyzed, the corresponding LLDs may be increased by a factor of 10. This requirement does not apply if either (1) analysis shows that the DOSE EQUIVALENT I-131 concentration in the primary coolant has not increased more than a factor of 3;~~ **or** ~~(2) the noble gas monitor shows that effluent activity has not increased more than a factor of 3.~~

~~3.4.2 DOSE FROM NOBLE GASES SURVEILLANCE REQUIREMENTS~~

~~APPLICABILITY~~

~~Applies to the determination of the air dose due to noble gases released in gaseous effluents.~~

~~OBJECTIVE~~

~~To determine if the air dose due to noble gases released in gaseous effluents is within limits.~~

~~SPECIFICATIONS~~

~~Cumulative dose contributions for the current calendar quarter and current calendar year for noble gases shall be determined in accordance with the ODCM at least once per month.~~

~~3.4.3 DOSE FROM IODINE 131, TRITIUM, AND RADIONUCLIDES IN PARTICULATE FORM SURVEILLANCE REQUIREMENTS~~

~~APPLICABILITY~~

~~Applies to the determination of the dose due to Iodine-131, Tritium, and all radionuclides in particulate form with half-lives greater than 8 days.~~

~~OBJECTIVE~~

~~To determine if the dose due to iodine 131, tritium and all radionuclides in particulate form with half lives greater than 8 days, is within limits.~~

~~SPECIFICATIONS~~

~~Cumulative dose contributions for the current calendar quarter and current calendar year for iodine-131, tritium, and radionuclides in particulate form with half lives greater than 8 days shall be determined in accordance with the methodology and parameters in the ODCM at least once per month.~~

~~3.4.4 GASEOUS RADWASTE TREATMENT SYSTEM SURVEILLANCE REQUIREMENTS~~

~~APPLICABILITY~~

~~Applies to the determination of the dose due to gaseous release.~~

~~OBJECTIVE~~

~~To determine if the operation of the gaseous radwaste treatment system and the ventilation exhaust treatment system is required.~~

~~SPECIFICATIONS~~

~~Doses due to gaseous releases from each reactor unit to areas at and beyond the SITE BOUNDARY shall be projected at least once per month in accordance with the methodology and parameters in the ODCM.~~

~~3.4.5 EXPLOSIVE GAS MIXTURE SURVEILLANCE REQUIREMENTS~~

~~APPLICABILITY~~

~~Applies to the determination of hydrogen and oxygen concentrations in the waste gas holdup system.~~

~~OBJECTIVE~~

~~To determine if the concentrations of hydrogen and oxygen are within limits.~~

~~SPECIFICATIONS~~

~~The concentrations of hydrogen and oxygen in the waste gas holdup system shall be determined to be within the above limits by monitoring the waste gases in the waste gas holdup system with the hydrogen and oxygen monitors required OPERABLE by Table 2.2-1 of Specification 2.2.~~

~~3.4.6~~ ~~GAS STORAGE TANKS SURVEILLANCE REQUIREMENTS~~

~~APPLICABILITY~~

~~Applies to the determination of the quantity of radioactive material contained in each gas storage tank.~~

~~OBJECTIVE~~

~~To determine if the quantity of radioactive material contained in each gas storage tank is within limits.~~

~~SPECIFICATIONS~~

~~The quantity of radioactive material contained in each gas storage tank shall be determined to be within the limit at least once per 24 hours when radioactive materials are being added to the tank in accordance with the methodology and parameters in the ODCM.~~

~~3.5 SOLID RADIOACTIVE WASTE SURVEILLANCE REQUIREMENTS~~

~~APPLICABILITY~~

~~Applies to testing of the solid radwaste system.~~

~~OBJECTIVE~~

~~To verify the solidification of wet radioactive wastes.~~

~~SPECIFICATIONS~~

~~The PROCESS CONTROL PROGRAM shall be used to verify the SOLIDIFICATION of at least one representative test specimen from at least every tenth batch of each type of wet radioactive waste (e.g., filter sludges, spent resins, evaporator bottoms, boric acid solutions, and sodium sulfate solutions).~~

~~A. If any test specimen fails to verify SOLIDIFICATION, the SOLIDIFICATION of the batch under test shall be suspended until such time as additional test specimens can be obtained, alternative SOLIDIFICATION parameters can be determined in accordance with the PROCESS CONTROL PROGRAM, and a subsequent test verifies SOLIDIFICATION. SOLIDIFICATION parameters determined by the PROCESS CONTROL PROGRAM.~~

~~B. If the initial test specimen from a batch of waste fails to verify SOLIDIFICATION, the PROCESS CONTROL PROGRAM shall provide for the collection and testing of representative test specimens from each consecutive batch of the same type of wet waste until at least 3 consecutive initial test specimens demonstrate SOLIDIFICATION. The PROCESS CONTROL PROGRAM shall be modified as required, as provided in Specification 5.3, to assure SOLIDIFICATION of subsequent batches of waste.~~

~~3.6 TOTAL DOSE SURVEILLANCE REQUIREMENTS~~

~~APPLICABILITY~~

~~Applies to determination of the total annual dose.~~

~~OBJECTIVE~~

~~To determine the total annual from liquid and gaseous effluents and from uranium fuel cycle sources.~~

~~SPECIFICATIONS~~

~~A. Cumulative dose contributions from liquid and gaseous effluents shall be determined in accordance with Specifications 3.3.2, 3.4.2, 3.4.3 and in accordance with the methodology and parameters in the ODCM.~~

~~B. Cumulative dose contributions from direct radiation from the reactor units and from radwaste storage tanks shall be determined in accordance with the methodology and parameters in the ODCM. This requirement is applicable only under conditions set forth in Specification 2.6.~~

~~3.7 RADIOLOGICAL ENVIRONMENTAL MONITORING PROGRAM SURVEILLANCE REQUIREMENTS~~

~~APPLICABILITY~~

~~Applies to routine testing of the radioactivity in the plant environs and is applicable to the entire Indian Point site.~~

~~OBJECTIVE~~

~~The overall objectives of the radiological environmental monitoring program are:~~

~~(1) to establish a sampling schedule for the entire Indian Point site which will recognize changes in radioactivity in the environs of the plants;~~

~~(2) to assure that the effluent releases are kept as low as practicable and within allowable limits in accordance with 10 CFR 50 and 10 CFR 20, respectively;~~

~~(3) to verify projected and anticipated radioactivity concentrations in the environment and related exposures from releases of radioactive materials from the Indian Point units Nos. 1, 2, and 3.~~

~~SPECIFICATION~~

~~The radiological environmental monitoring samples shall be collected pursuant to Table 2.7-1 from the specific locations given in the table and figure(s) in the ODCM and the detection capabilities required by Table 3.7-1.~~

~~TABLE 3.7-1~~

~~DETECTION CAPABILITIES FOR ENVIRONMENTAL SAMPLE ANALYSIS~~[a]

~~LOWER LIMIT OF DETECTION (LLD)~~[b,c]

~~Analysis~~	~~Water (pCi/ℓ)~~	~~Airborne Particulate or Gases (pCi/m³)~~	~~Fish (pCi/kg, wet)~~	~~Milk (pCi/ℓ)~~	~~Food Products (pCi/kg, wet)~~	~~Sediment (pCi/kg, dry)~~
~~gross beta~~	~~4~~	~~0.01~~				
~~H-3~~	~~2,000*~~					
~~Mn-54~~	~~15~~		~~130~~			
~~Fe-59~~	~~30~~		~~260~~			
~~Co-58, 60~~	~~15~~		~~130~~			
~~Zn-65~~	~~30~~		~~260~~			
~~Zr-Nb-95~~	~~15~~					
~~I-131~~	~~1**~~	~~0.07~~		~~1~~	~~60~~	
~~Cs-134~~	~~15~~	~~0.05~~	~~130~~	~~15~~	~~60~~	~~150~~
~~Cs-137~~	~~18~~	~~0.06~~	~~150~~	~~18~~	~~80~~	~~180~~
~~Ba-La-140~~	~~15~~			~~15~~		

~~* If no drinking water pathway exists, a value of 3,000 pCi/ℓ may be used.~~

~~** If no drinking water pathway exists, a value of 15 pCi/ℓ may be used.~~

~~TABLE 3.7-1 (Continued)~~

~~TABLE NOTATION~~

~~a. This list does not mean that only these nuclides are to be considered. Other peaks that are identifiable, together with those of the above nuclides, shall also be analyzed and reported in the Annual Radiological Environmental Operating Report pursuant to Specification 5.3.2.2.~~

~~b. Required detection capabilities for thermoluminescent dosimeters used for environmental measurements are given in Regulatory Guide 4.13.~~

~~c. The LLD is defined, for purposes of these specifications as the smallest concentration of radioactive material in a sample that will yield a net count, above system background, that will be detected with 95% probability with only 5% probability of falsely concluding that a blank observation represents a "real" signal. Equations used in the calculation of the LLD for a particular measurement system are presented in the ODCM.~~

~~It should be recognized that the LLD is defined as an a priori (before the fact) limit representing the capability of a measurement system and not as an a posteriori (after the fact) limit for a particular measurement. Analyses shall be performed in such a manner that the stated LLDs will be achieved under routine conditions. Occasionally background fluctuations, unavoidable small sample sizes, the presence of interfering nuclides, or other uncontrollable circumstances may render these LLDs unachievable. In such cases, the contributing factors shall be identified and described in the Annual Radiological Environmental Operating Report pursuant to Specification 5.3.2.2.~~

~~Amendment No. 51, 123,~~

~~3.8 LAND USE CENSUS SURVEILLANCE REQUIREMENTS~~

~~APPLICABILITY~~

~~Applies to the annual land use census.~~

~~OBJECTIVES~~

~~To identify the radiation dose at various locations within a distance of 5 miles from the site.~~

~~SPECIFICATION~~

~~The land use census shall be conducted during the growing season at least once per calendar year using that information that will provide the best results, such as by a door to door survey, or by consulting local agriculture authorities. The results of the land use census shall be included in the Annual Radiological Environmental Operating Report pursuant to Specification 5.3.3.2.~~

~~3.9 INTERLABORATORY COMPARISON PROGRAM SURVEILLANCE REQUIREMENTS~~

~~APPLICABILITY~~

~~Applies to the performance of the environmental Interlaboratory Comparison Program.~~

~~OBJECTIVE~~

~~To present the results of the Interlaboratory Comparison Program.~~

~~SPECIFICATION~~

~~A summary of the results obtained as part of the required Interlaboratory Comparison Program shall be included in the Annual Radiological Environmental Operation Report pursuant to Specification 5.3.3.2.~~

~~RADIOACTIVE LIQUID EFFLUENT MONITORING INSTRUMENT (Specifications 2.1 and 3.1)~~

~~The radioactive liquid effluent instrumentation is provided to monitor and control, as applicable, the releases of radioactive materials in liquid effluents during actual or potential releases of liquid effluents. The alarm/trip setpoints for these instruments shall be calculated and adjusted in accordance with the methodology and parameters in the ODCM to ensure that the alarm/trip will occur prior to exceeding the limits of 10 CFR Part 20. The OPERABILITY and use of this instrumentation is consistent with the requirements of General Design Criteria 60, 63 and 64 of Appendix A to 10 CFR Part 50. The purpose of tank level indicating devices is to assure the detection and control of leaks that if not controlled could potentially result in the transport of radioactive materials to UNRESTRICTED AREAS.~~

~~RADIOACTIVE GASEOUS EFFLUENT~~ **EXPLOSIVE GAS** MONITORING INSTRUMENTATION (~~Specification 2.2 and 3.2~~ **1/2.1.1**)

The **explosive gas monitoring** ~~radioactive gaseous effluent~~ instrumentation is provided to monitor and control **the concentrations of potentially explosive gas mixtures in the waste gas holdup system.** ~~as applicable, the releases of radioactive materials in gaseous effluents during actual or potential releases of radioactive materials in gaseous effluents during actual or potential releases of gaseous effluents. The alarm/trip setpoints for these instruments shall be calculated and adjusted in accordance with the methodology and parameters in the ODCM to ensure that the alarm/trip will occur prior to exceeding the limits of 10 CFR Part 20. This instrumentation also includes provisions for monitoring (and controlling) the concentrations of potentially explosive gas mixtures in the waste gas holdup system.~~ The OPERABILITY and use of this instrumentation is consistent with the requirements of General Design Criteria 60~~, 63 and 64~~ of Appendix A to 10 CFR Part 50.

~~LIQUID EFFLUENTS CONCENTRATION (Specifications 2.3.1 and 3.3.1)~~

~~These specifications are provided to ensure that the concentration of radioactive materials, released in liquid waste effluents to UNRESTRICTED AREAS will be less than the concentration levels specified in 10 CFR Part 20, Appendix B, Table II, Column 2. This limitation provides additional assurance that the levels of radioactive materials in bodies of water in UNRESTRICTED AREAS will result in exposures within (1) the Section II.A design objectives of Appendix I, 10 CFR Part 50, to a MEMBER OF THE PUBLIC and (2) the limits of 10 CFR Part 20.106(e) to the population. The concentration limit for dissolved or entrained noble gases is based upon the assumption that Xe 135 is the controlling radioisotope and its MPC in air (submersion) was converted to an equivalent concentration in water using the methods described in International Commission on Radiological Protection (ICRP) Publication 2.~~

~~This specification applies to the release of liquid effluents from all reactors at the site.~~

~~DOSE FROM LIQUID EFFLUENTS (Specifications 2.3.2 and 3.3.2)~~

~~These specifications are provided to implement the requirements of Sections II.A, III.A and IV.A of Appendix I, 10 CFR Part 50. The Limiting Condition for Operation implements the guides set forth in Section II.A of Appendix I. The ACTION statements provide the required operating flexibility and at the same time implement the guides set forth in Section IV.A of Appendix I to assure that the releases of radioactive material in liquid effluents will be kept "as low as is reasonably achievable." Also, for fresh water sites with drinking water supplies that can be potentially affected by plant operations, there is reasonable assurance that the operation of the facility will not result in radionuclide concentrations in the finished drinking water that are in excess of the requirements of 40 CFR Part 141. The dose calculation methodology and parameters in the ODCM implement the requirements in Section III.A of Appendix I that conformance with the guides of Appendix I be shown by calculational procedures based on models and data, such that the actual exposure of a MEMBER OF THE PUBLIC through appropriate pathways is unlikely to be substantially underestimated. The equations specified in the ODCM for calculating the doses due to the actual release rates of radioactive materials in liquid effluents are consistent with the methodology provided in Regulatory Guide 1.109, "Calculations of Annual Doses to Man from Routine Releases of Reactor Effluents for the purpose of Evaluating Compliance with 10 CFR Part 50, Appendix I, "Revision 1, October 1977 and Regulatory Guide 1.113, "Estimating Aquatic Dispersion of Effluents from Accidental and Routine Reactor Releases for the Purpose of Implementing Appendix I," April 1977.~~

~~This specification applies to the release of liquid effluents from each reactor at the site. For units with shared radwaste treatment systems, the liquid effluents from the shared system are proportioned among the units sharing that system.~~

~~LIQUID RADWASTE TREATMENT SYSTEM (Specification 2.3.2 and 3.3.2)~~

~~The requirement that the appropriate portions of this system be used when specified, provides assurance that the releases of radioactive materials in liquid effluents will be kept "as low as is reasonably achievable". This specification implements the requirements of 10 CFR Part 50.36a, General Design Criterion 60 of Appendix A to 10 CFR Part 50 and the design objective given in Section II.D of Appendix I to 10 CFR part 50. The specified limits governing the use of appropriate portions of the liquid radwaste treatment system were specified as a suitable fraction of the dose design objectives set forth in Section II.A of Appendix I, 10 CFR Part 50, for liquid effluents.~~

~~This specification applies to the release of liquid effluents from each reactor at the site. For units with shared radwaste treatment systems, the liquid effluents from the shared system are proportioned among the units sharing that system.~~

LIQUID HOLDUP TANKS (~~Specifications 2.3.4 and 3.3.4~~ **1/2.1.1**)

The tanks listed in **this Specification** ~~these Specifications~~ include all those outdoor tanks that are not surrounded by liners, dikes, or walls capable of holding the tank contents and that do not have tank overflows and surrounding area drains connected to the liquid radwaste treatment system.

Restricting the quantity of radioactive material contained in the specified tanks provides assurance that in the event of an uncontrolled release of the tanks' contents, the resulting concentrations would be less than the **values given in Appendix B, Table 2, Column 2 to 10 CFR 20,** ~~limits of 10 CFR Part 20, Appendix B, Table II, Column 2,~~ at the nearest **potable** ~~portable~~ water supply and the nearest water supply in an UNRESTRICTED AREA.

~~GASEOUS EFFLUENTS DOSE RATE (Specifications 2.4.1 and 3.4.1)~~

~~These **specification** are provided to ensure that the dose at any time at and beyond the SITE BOUNDARY from gaseous effluents from all units on the site will be within the annual dose limits of 10 CFR Part 20. The annual dose limits are the doses associated with the concentrations of 10 CFR Part 20, Appendix B, Table II, Column 1. These limits provide reasonable assurance that radioactive material discharge in gaseous effluents will not result in the exposure of a MEMBER OF THE PUBLIC, either within or outside the SITE BOUNDARY, to annual average concentrations exceeding the limits specified in Appendix B, Table II of 10 CFR Part 20 (10 CFR Part 20.106(b). For MEMBERS OF THE PUBLIC who may at times be within the SITE BOUNDARY, the occupancy of that MEMBER OF THE PUBLIC will usually be sufficiently low to compensate for any increase in the atmospheric diffusion factor above that for the SITE BOUNDARY. Examples of calculations for such MEMBER OF THE PUBLIC, with the appropriate occupancy factors, shall be given in the ODCM. The specified release rate limits restrict, at all times, the corresponding gamma and beta dose rates above background to a MEMBER OF THE PUBLIC at or beyond the SITE BOUNDARY to less than or equal to 500 mrem/year to the total body or to less than or equal to 3000 mrems/year to the skin. These release rate limits also restrict, at all times the corresponding thyroid dose rate above background to a child via the inhalation pathway to less than or equal to 1500 mrems/year.~~

~~This specification applies to the release of gaseous effluents from all reactors at the site.~~

~~DOSE FROM NOBLE GASES (Specifications 2.4.2 and 3.4.2)~~

~~These specifications are provided to implement the requirements of Sections II.B, III.A and IV.A of Appendix I, 10 CFR Part 50. The Limiting Condition for Operation implements the guides set forth in Section II.B of Appendix I. The ACTION statements provide the required operating flexibility and at the same time implement the guides set forth in Section IV.A of Appendix I to assure that the releases of radioactive material in gaseous effluents will be kept "as low as is reasonably achievable." The Surveillance Requirements implement the requirements in Section III.A of Appendix I that conformance with the guides of Appendix I be shown by calculational procedures based on models and data such that the actual exposure of a MEMBER OF THE PUBLIC through appropriate pathways is unlikely to be substantially underestimated. The dose calculation methodology and parameters established in the ODCM for calculating the doses~~

~~due to the actual release rates of radioactive noble gases in gaseous effluents are consistent with the methodology provided in Regulatory Guide 1.109, "Calculation of Annual Doses to Man from Routine Releases of Reactor Effluents for the Purpose of Evaluating Compliance with 10 CFR Part 50, Appendix I." Revision 1, October 1977 and Regulatory Guide 1.111, "Methods for Estimating Atmospheric Transport and Dispersion of Gaseous Effluents in Routine Releases from Light-Water Cooled Reactors," Revision 1, July 1977. The ODCM equations provided for determining the air doses at and beyond the SITE BOUNDARY are based upon the historical average atmospheric conditions.~~

~~These specifications apply to the release of gaseous effluents from each reactor at the site. For units with shared radwaste treatment systems, the gaseous effluents from the shared system ar proportioned among the units sharing that system.~~

~~DOSE FROM IODINE 131, TRITIUM, AND RADIONUCLIDES IN PARTICULATE FORM (Specifications 2.4.3 and 3.4.3~~

~~These specifications are provided to implement the requirements of Sections II.C, III.A and IV.A of Appendix I, 10 CFR Part 50. The Limiting Conditions for Operation are the guides set forth in Section II.C of Appendix I. The limiting condition for operation statements provide the required operating flexibility and at the same time implement the guides set forth in Section IV.A of Appendix I to assure that the releases of radioactive materials in gaseous effluents will be kept "as low as is reasonably achievable." The ODCM calculational methods specified in the Surveillance Requirements implement the requirements in Section II.A of Appendix I that conformance with the guides of Appendix I be shown by calculational procedures based on models and data, such that the actual exposure of a MEMBER OF THE PUBLIC through appropriate pathways is unlikely to be substantially underestimated. The ODCM calculational methodology and parameters for calculating the doses due to the actual release rates of the subject materials are consistent with the methodology provided in Regulatory Guide 1.109, "Calculation of Annual Doses to Man from Routine Releases of Reactor Effluents for the Purpose of Evaluating Compliance with 10 CFR Part 50, Appendix I," Revision 1, October 1977 and Regulatory Guide 1.111, "Methods for Estimating Atmospheric Transport and Dispersion of Gaseous Effluents in Routine Releases from Light-Water-Cooled Reactors," Revision 1, July 1977. These equations also provide for determining the actual doses based upon the historical average atmospheric conditions. The release rate specifications for iodine-131, tritium, and radionuclides in particulate form with half-lives greater than 8 days are dependent upon the existing radionuclide pathways to man, in the areas at and beyond the SITE BOUNDARY. The pathways that were examined in the development of these calculations were: 1) individual inhalation of airborne radionuclides, 2) deposition of radionuclides onto green leafy vegetation with subsequent consumption by man, 3) deposition onto grassy areas where milk animals and meat producing animals graze with consumption of the milk and meat by man, and 4) deposition on the ground with subsequent exposure of man.~~

~~This specification applies to the release of gaseous effluents from each reactor at the site. For units with shared radwaste treatment systems, the gaseous effluents from the shared systems are proportioned among the units sharing that system.~~

~~GASEOUS RADWASTE TREATMENT SYSTEM (Specifications 2.4.4 and 3.3.4~~

~~The requirement that the appropriate portions of these systems be used, when specified, provides reasonable assurance that the release of radioactive materials in gaseous effluents will be kept "as low as is reasonably achievable". This specification implements the requirements of 10 CFR part 50.36a, Genera given in Section II.D of Appendix I to 10 CFR Part 50.~~

~~The specified limits governing the use of appropriate portions of the systems were specified as a suitable fraction of the dose design objectives set forth in Sections II.B and II.C of Appendix I, 10 CFR Part 50, for gaseous effluents.~~

~~These specifications apply to the release of gaseous effluents from each reactor at the site. For units with shared radwaste treatment systems, the gaseous effluents from the shared systems are proportioned among the units sharing that system.~~

EXPLOSIVE GAS MIXTURE (~~Specifications 2.4.5 and 3.4.5~~ **1/2.3.1**)

This specification is provided to ensure that the concentration of potentially explosive gas mixtures contained in the waste gas holdup system is maintained below the flammability limits of hydrogen and oxygen. Maintaining the concentration of hydrogen and oxygen below their flammability limits provides assurance that the releases of radioactive materials will be controlled in conformance with the requirements of General Design Criterion 60 of Appendix A to 10 CFR Part 50.

GAS STORAGE TANKS (~~Specifications 2.4.6 and 3.4.6~~ **1/2.3.2**)

The tanks included in this specification are those tanks for which the quantity of radioactivity contained is not limited directly or indirectly by another Technical Specification to a quantity that is less than the quantity that provides assurance that in the event of an uncontrolled release of the tank's contents, the resulting total body exposure to a MEMBER OF THE PUBLIC at the nearest SITE BOUNDARY will not exceed 0.5 rem in an event of 2 hours duration.

Restricting the quantity of radioactivity contained in each gas storage tank provides assurance that in the event of an uncontrolled release of the tank's contents, the resulting total body exposure to a MEMBER OF THE PUBLIC at the nearest SITE BOUNDARY will not exceed 0.5 rem. This is consistent with NUREG-0133.

~~SOLID RADIOACTIVE WASTE (Specifications 2.5 and 3.5)~~

~~These specifications implement the requirements of 10 CFR 50.36a and General Design Criterion 60 of Appendix A to 10 CFR Part 50. The process parameters included in establishing the PROCESS CONTROL PROGRAM may include but are not limited to waste type, waste pH, waste/liquid/solidification agent/catalyst ratios, waste oil content, waste principal chemical constituents, and mixing and curing times.~~

~~TOTAL DOSE (Specifications 2.6 and 3.6~~

~~This specification is provided to meet the dose limitations of 40 CFR Part 190 that have been incorporated into 10 CFR Part 20 by 46 FR 18525. The Specification requires the preparation and submittal of a Special Report whenever the calculated doses from plant generated radioactive effluents and direct radiation exceed 25 mrems to the total body or any organ, except the thyroid, which shall be limited to less than or equal to 75 mrems.~~

~~For sites containing up to 4 reactors, it is highly unlikely that the resultant dose to a MEMBER OF THE PUBLIC will exceed the dose limits of 40 CFR Part 190 if the individual reactors remain within twice the dose design objective of Appendix I, and if direct radiation doses from the reactor units and outside storage tanks are kept small. The Special Report will describe a course of action that should result in the limitation of the annual dose to a MEMBER OF THE PUBLIC to within the 40 CFR Part 190 limits. For the purposes of the Special Report, it may be assumed that the dose commitment to the MEMBER OF THE PUBLIC from other uranium fuel cycle sources is negligible, with the exception that dose contributions from other nuclear fuel cycle facilities at the same site or within a radium of 8 km must be considered. If the dose to an MEMBER OF THE PUBLIC is established to exceed the requirements of 40 CFR Part 190, the Special Report with a request for a variance (provided the release conditions resulting in violation of 40 CFR Part 190 have not already been corrected), in accordance with the provisions of 40 CFR Part 190.11 and 10 CFR Part 20.405c, is considered to be a timely request and fulfills the requirements of 40 CFR Part 190 until NRC staff action is completed. The variance only relates to the limits of 40 CFR Part 190, and does not apply in any way to the other requirements for dose limitation of 10 CFR Part 20, as addressed in Specifications 2.3.1 and 2.4.1. An individual is not considered a MEMBER OF THE PUBLIC during any period in which he/she is engaged in carrying out any operation that is part of the nuclear fuel cycle.~~

~~RADIOLOGICAL ENVIRONMENTAL MONITORING PROGRAM (Specifications 2.7 and 3.7)~~

~~The radiological environmental monitoring program required by these specifications provide representative measurements of radiation and of radioactive materials in those exposure pathways and for those radionuclides that lead to the highest potential radiation exposures of MEMBERS OF THE PUBLIC resulting from the station operation. This monitoring program implements Section IV.B.2 or Appendix I to 10 CFR Part 50 and thereby supplements the radiological effluent monitoring program by verifying that the measurable concentrations of radioactive materials and levels of radiation are not higher than expected on the basis of the effluent measurements and the modeling of the environmental exposure pathways. Program changes may be initiated based on operational experience.~~

~~The required detection capabilities for environmental sample analyses are tabulated in terms of the lower limits of detection (LLDs). The LLDs required by Table 3.7-1 are considered optimum for routine environmental measurements in industrial laboratories. It should be recognized that the LLD is defined as an a priori (before the fact) limit representing the capability of a measurement system and not as an a posteriori (after the fact) limit for a particular measurement.~~

~~LAND USE CENSUS (Specifications 2.8 and 3.8.1)~~

~~These **specification** are provided to ensure that changes in the use of areas at and beyond the SITE BOUNDARY are identified and that modifications to the radiological environmental monitoring program are made if required by the results of this census. The best information from the door to door survey, from aerial survey or from consulting with local agricultural authorities shall be used. This census satisfies the requirements of Section IV.B.3 of Appendix I to 10 CFR Part 50. Restricting the census to gardens of greater than 50 m^2 provides assurance that significant exposure pathways via leafy vegetables will be identified and monitored since a garden of this size is the minimum required to produce the quantify (26 kg/year) of leafy vegetables assumed in Regulatory Guide 1.109 for consumption by a child. To determine this minimum garden size, the following assumptions were made: 1) 20% of the garden was used for growing broad leaf vegetation (i.e., similar to lettuce and cabbage), and 2) a vegetation yield of 2 kg/m^2.~~

~~INTERLABORATORY COMPARISON PROGRAM (Specifications 2.9 and 3.9)~~

~~The requirement for participation in an approved Interlaboratory Comparison Program is provided to ensure that independent checks on the precision and accuracy of the measurements of radioactive material in environmental sample matrices are performed as part of the quality assurance program for environmental monitoring in order to demonstrate that the results ar reasonably valid for the purposes of Section IV.B.2 of Appendix I to 10 CFR Part 50.~~

~~5~~4.0 ADMINISTRATIVE CONTROLS

~~5~~4.1 RESPONSIBILITIES

The responsibilities of the Plant Operating Review Committee and the Safety Review Committee associated with the implementation of the Radiological Environmental Technical Specifications are delineated in the appropriate sections of Appendix A **Technical** Specification 6.5.

~~5~~4.2 PROCEDURES AND PROGRAMS

Reference to implementation of the procedures and programs necessary for the implementation of the Radiological Environmental Technical Specifications are delineated in Appendix A **Technical** Specification**s** 6.8.1 **and 6.8.4**.

~~5~~4.3 REPORTING REQUIREMENTS

~~5~~4.3.1 SPECIAL REPORTS

The activities requiring the submittal of special reports are delineated in Appendix A **Technical** Specification 6.9.2. **The ODCM also provides a listing of special reporting requirements.**

~~5~~4.3.2 ROUTINE REPORTS

~~5~~4.3.2.1 ~~SEMI~~ANNUAL RADIOACTIVE EFFLUENT RELEASE REPORT *

The Annual ~~Routine~~ Radioactive Effluent Release Report~~s~~ covering the operation of the unit during the previous **year** ~~6 months~~ of operation shall be submitted **prior to May 1 of each year** ~~within 60 days after January 1 and July 1 of each year~~. ~~The period of the first report shall begin with the date of initial criticality.~~

The **report** ~~Radioactive Effluent Release Reports~~ shall include a summary of the quantities of radioactive liquid and gaseous effluents and solid waste released from the unit ~~as outlined in Regulatory Guide 1.21, "Measuring Evaluating, and Reporting Radioactivity in Solid Wastes and Releases of Radioactive Materials in Liquid and Gaseous Effluents from Light-Water-Cooled Nuclear Power Plant," Revision 1, June 1974, with data summarized on a quarterly basis following the format of Appendix B thereof or as modified in the R.E.T.S..~~ **The material provided shall be (1) consistent with the objectives outlined in the ODCM and PCP and (2) in conformance with 10 CFR 50.36a and Section IV.B.1 of Appendix I to 10 CFR Part 50.**

A full listing of the information to be contained in the Annual Radioactive Effluent Release Report is provided in the ODCM.

---

* A single submittal may be made for a multiple unit station. The submittal should combine those sections that are common to all units at the station; however, for units with separate radwaste systems, the submittal shall specify the releases of radioactive material from each unit.

~~The radioactive Effluent Release Report to be submitted within 60 days after January 1 of each year shall include an annual summary of hourly meteorological data collected over the previous year. This annual summary may be either in the form of an hour by hour listing on magnetic tape of wind speed, wind direction, atmospheric stability, and precipitation (if measured), or in the form of joint frequency distributions of wind speed, wind direction, and atmospheric stability.** This same report shall include an assessment of the radiation doses due to the radioactive liquid and gaseous effluents released from the unit or station during the previous calendar year. This same report shall also include an assessment of the radiation doses from radioactive liquid and gaseous effluents to MEMBERS OF THE PUBLIC due to their activities inside the SITE BOUNDARY during the report period. All assumptions used in making these assessments, i.e., specific activity, exposure time and location, shall be included in these reports. The meteorological conditions concurrent with the time of release of radioactive materials in gaseous effluents, as determined by sampling frequency and measurement, shall be used for determining the gaseous pathway doses. (For ORs: approximate and conservative approximate methods are acceptable.) The assessment of radiation doses shall be performed in accordance with the methodology and parameters in the OFFSITE DOSE CALCULATION MANUAL (ODCM).~~

~~The Radioactive Effluent Release Report to be submitted 60 days after January 1 of each year shall also include an assessment of radiation doses to the likely most exposed MEMBER OF THE PUBLIC from reactor releases and other nearby uranium fuel cycle sources, when required by Sections 2.6 and 3.6 including doses from primary effluent pathways and direct radiation, for the previous calendar year to show conformance with 40 CFR Part 190, Environmental Radiation Protection Standards for Nuclear Power Operation.~~

~~Acceptable methods for calculating the dose contribution from liquid and gaseous effluents are given in Regulatory Guide 1.109 Rev. 1, October, 1977.~~

~~The Radioactive Effluent Release Reports shall include the following information for each class of solid waste (as defined by 10 CFR Part 61) shipped offsite during the report period:~~

~~a. Container volume,~~

~~b. Total curie quantity (specify whether determined by measurement or estimate),~~

~~c. Principal **radionuclides** (specify whether determined by measurement or estimate,~~

~~d. Source of waste and processing employed (e.g., dewatered spent resin, compacted dry waste, evaporator bottoms),~~

~~e. Type of container (e.g., LSA, Type A, Type B, Large Quantity) and~~

~~f. Solidification agent or absorbent (e.g., cement, urea formaldehyde).~~

~~This information will be presented in tabular form similar to that or Table 3 of Reg. Guide 1.21.~~

~~The Radioactive Effluent Release Reports shall include a list and description of unplanned releases from the site to UNRESTRICTED AREAS of radioactive materials in gaseous and liquid effluents made during the reporting period.~~

~~The Radioactive Effluent Release Reports shall include any changes made during the reporting period to the PROCESS CONTROL PROGRAM (PCP) and to the OFFSITE DOSE CALCULATION MANUAL (ODCM), as well as a listing of new locations for dose calculations and/or environmental monitoring identified by the land use census pursuant to Specification 2.8.~~

~~** In lieu of submission with the first half year Radioactive Effluent Release Report, the licensee has the option of retaining this summary of required meteorological data on site in a file that shall be provided to the NRC.~~

~~5~~4.3.2.2 ANNUAL RADIOLOGICAL ENVIRONMENTAL OPERATING REPORT*

An Annual ~~Routine~~ Radiological Environmental Operating Report~~s~~ covering the operation of the unit during the previous calendar year shall be submitted prior to May 1 of each year.

The Annual Radiological Environmental Operating Reports shall include summaries, interpretations, and an analysis of trends of the results of the **Radiological Environmental Monitoring Program** ~~radiological environmental surveillance activities~~ for the report period~~, including a comparison, as appropriate, with preoperational studies, with operational controls, and with previous environmental surveillance reports, and an assessment of the observed impacts of the plant operation on the environment. The report shall also include the results of land use censuses required by Specification 2.8.~~. **The material provided shall be consistent with the objectives outlined in (1) the ODCM and (2) Sections IV.B.2, IV.B.3, and IV.C of Appendix I to 10 CFR Part 50.**

~~The Annual Radiological Environmental Operating Reports shall include the results of analysis of all radiological environmental samples and of all environmental radiation measurements taken during the period pursuant to the locations specified in the Table and Figures in the ODCM, as well as summarized and tabulated results of these analyses and measurements in the format of the table in the Radiological Assessment Branch Technical Position, Revision 1, November 1979. In the event that some individual results are not available for inclusion with the report, the report shall be submitted noting and explaining the reasons for the missing results. The missing data shall be submitted as soon as possible in a supplementary report.~~

~~The reports shall also include the following: a summary description of the radiological environmental monitoring program; at least two legible maps**covering all sampling locations keyed to a table giving distances and directions from the centerline of one reactor; the results of licensee participation in the Interlaboratory Comparison Program, required by Specification 2.9; discussion of all deviations from the sampling schedule of Table 2.7-1; and discussion of all analyses in which the LLD required by Table 3.7-1 was not achievable.~~

A full listing of the information to be contained in the Annual Radiological Environmental Operating Report is provided in the ODCM.

~~5.7~~4.3.3 MAJOR CHANGES TO RADIOACTIVE LIQUID, GASEOUS AND SOLID WASTE TREATMENT SYSTEMS**

Licensee initiated major changes to the radioactive waste systems (liquid, gaseous and solid) shall be reported to the Commission in the ~~Semi~~Annual Radioactive Effluent Release Report for the period in which the evaluation was reviewed by the PORC. The discussion of each shall contain:

a. A summary of the evaluation that led to the determination that the change could be made in accordance with 10 CFR Part 50.59.

b. Sufficient detailed information to totally support the reason for the change without benefit of additional or supplemental information;

c. A detailed description of the equipment, components and processes involved and the interfaces with other plant systems;

* A single submittal may be made for a multiple unit station.

**** The information called for in this Specification will be submitted as part of the annual FSAR update.**

~~** One map shall cover stations near the site boundary; a second shall include the more distant stations.~~

d. An evaluation of the change, which shows the predicted **releases** ~~released~~ of radioactive materials in liquid and gaseous effluents and/or quantity of solid waste that differ from those previously predicted in the license application and amendments thereto;

e. An evaluation of the change, which shows the expected maximum exposures to **an** individual in the UNRESTRICTED AREA and to the general population that differ from those previously estimated in the license application and amendments thereto;

f. A comparison of the predicted releases of radioactive materials, in liquid and gaseous effluents and in solid waste, to the actual releases for the period prior to when the changes are to be made;

g. An estimate of the exposure to plant operating personnel as a result of the change; and

h. Documentation of the fact that the change was reviewed and found acceptable by the PORC.

~~5~~**4**.4 RECORD RETENTION

Records associated with the Radiological Environmental Monitoring Program are to be retained as required by Appendix A **Technical** Specification 6.10.2.

~~5~~**4**.5 PROCESS CONTROL PROGRAM (PCP)

~~5~~**4**.5.1 The PCP shall be approved by the Commission prior to implementation.

~~5~~**4**.5.2 Licensee initiated changes to the PCP:

1. Shall be **documented and records of reviews performed shall be retained as required by Appendix A Technical Specification 6.10.2.p** ~~submitted to the Commission in the Semiannual Radioactive Effluent Release Report for the period in which the change(s) was made~~. This **documentation** ~~submittal~~ shall contain:

   a. Sufficient~~ly detailed~~ information to ~~totally~~ support the ~~rationale for the~~ change **together with the appropriate analyses or evaluations justifying the change(s)** ~~without the benefit of additional or supplemental information~~; **and**

b. A determination that the change **will maintain** ~~did not reduce~~ the overall conformance of the solidified waste product to existing **requirements of Federal, State, or other applicable regulations** ~~criteria for solid wastes; and~~

~~c. Documentation of the fact that the change has been reviewed and found acceptable by the PORC.~~

2. Shall become effective upon review and acceptance by the **PORC and the approval of the** Site Executive Officer.

3. **Shall be submitted to the Commission as a part of or concurrent with the Annual Radioactive Effluent Release Report for the period of the report in which any change to the PCP was made. Each change shall be identified by marking in the margin of the affected pages, clearly indicating the area of the page that was changed, and shall indicate the date (e.g., month/year) the change was implemented.**

~~5~~4.6 OFFSITE DOSE CALCULATION MANUAL (ODCM)

~~5~~4.6.1 The ODCM shall be approved by the Commission prior to implementation.

~~5~~4.6.2 Licensee initiated changes to the ODCM:

1. Shall be **documented and records of reviews performed shall be retained as required by Appendix A Technical Specification 6.10.2.p** ~~submitted to the Commission in the Semiannual Radioactive Effluent Release Report for the period in which the change(s) was made effective~~. This **documentation** ~~submittal~~ shall contain:

   a. Sufficient~~ly detailed~~ information to ~~totally~~ support the ~~rationale for the~~ change **together with the appropriate analyses or evaluations justifying the changes(s)** ~~without benefit of additional or supplemental information. Information submitted should consist of a package of those pages of the ODCM to be changed with each page numbered and provided with an approval and date box, together with appropriate analyses or evaluations justifying the changes(s)~~; **and**

   b. A determination that the change will maintain ~~not reduce~~ the **level of radioactive effluent control required pursuant to 10 CFR 20.1302, 40 CFR Part 190, 10 CFR 50.36a, and Appendix I to 10 CFR Part 50 and not adversely impact the** accuracy **or** ~~of~~ reliability of effluent dose ~~calculations~~ or setpoint **calculations** ~~determinations~~.

2. Shall become effective upon review and acceptance by the **PORC and the approval of the** Site Executive Officer.

3. **Shall be submitted to the Commission as a part of or concurrent with the Annual Radioactive Effluent Release Report for the period of the report in which any change to the ODCM was made. Each change shall be identified by marking in the margin of the affected pages, clearly indicating the area of the page that was changed, and shall indicate the date (e.g., month/year) the change was implemented.**

~~5.8~~**4.7** MAP DEFINING UNRESTRICTED AREAS FOR RADIOACTIVE GASEOUS AND LIQUID EFFLUENTS

Information regarding radioactive gaseous and liquid effluents, which will allow identification of structures and release points as well as definition of UNRESTRICTED AREAS within the SITE BOUNDARY that are accessible to MEMBERS OF THE PUBLIC, shall be shown in Figure **4.7-1** ~~5.8-1~~.

The definition of UNRESTRICTED AREA used in implementing the Radiological Effluent Technical Specifications has been expanded over that in 10 CFR **20.1003** ~~20.3 (a)(17)~~. The UNRESTRICTED AREA boundary may coincide with the exclusion (fenced) area boundary, as defined in 10 CFR 100.3(a), but the UNRESTRICTED AREA does not include areas over water bodies. **For calculations performed pursuant to 10 CFR Part 50.36a,** the concept of UNRESTRICTED AREAS, established at or beyond the SITE BOUNDARY, is utilized in the **Radiological Effluent Controls** ~~LIMITING CONDITIONS FOR OPERATION~~ to keep levels of radioactive materials in liquid and gaseous effluents as low as is reasonably achievable, ~~pursuant to 10 CFR 50.36a~~.

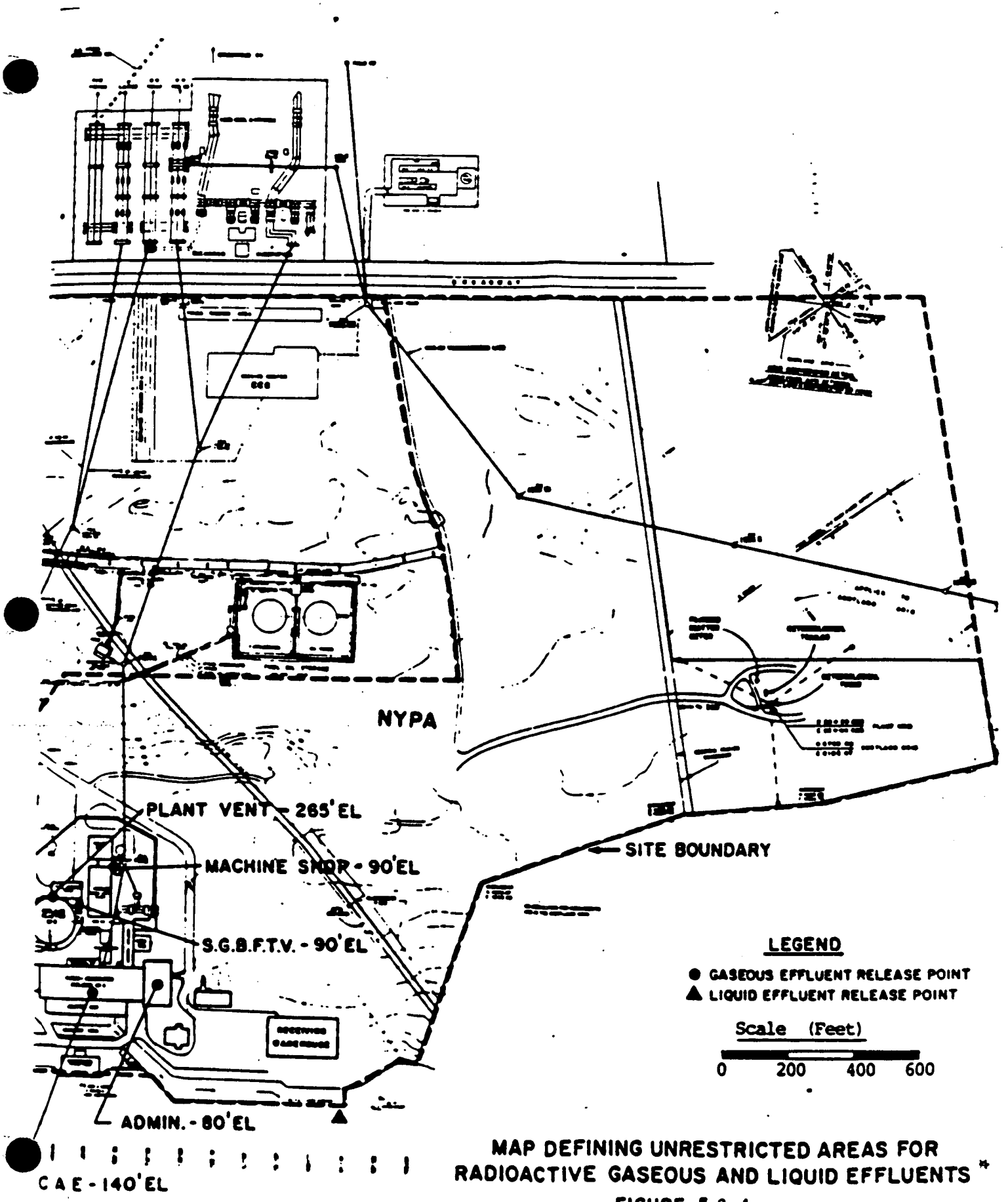

MAP DEFINING UNRESTRICTED AREAS FOR RADIOACTIVE GASEOUS AND LIQUID EFFLUENTS *

FIGURE 5.8-1

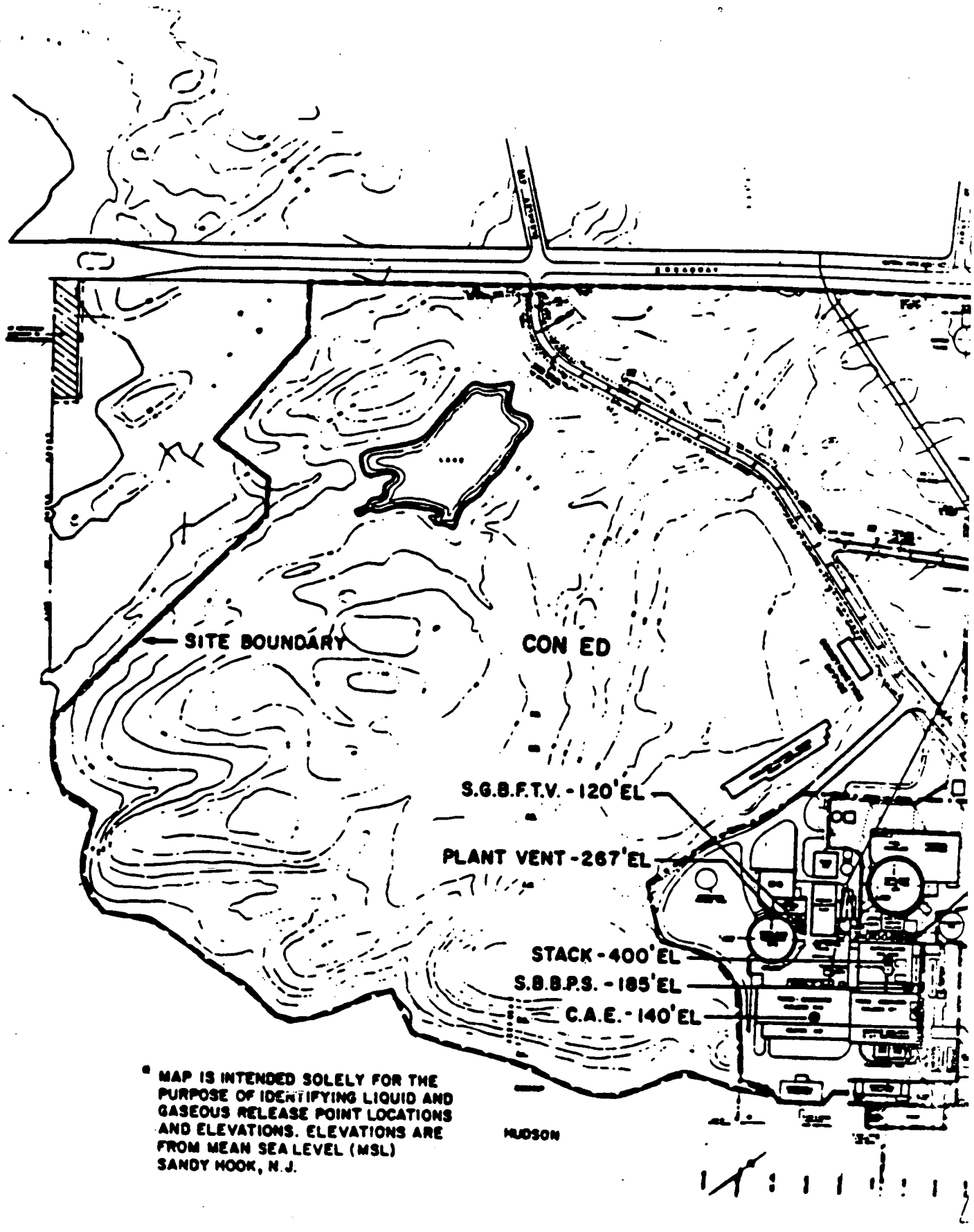

* MAP IS INTENDED SOLELY FOR THE PURPOSE OF IDENTIFYING LIQUID AND GASEOUS RELEASE POINT LOCATIONS AND ELEVATIONS. ELEVATIONS ARE FROM MEAN SEA LEVEL (MSL) SANDY HOOK, N.J.

TITLE: OFFSITE DOSE CALCULATION MANUAL REV. ~~11~~ 12

WRITTEN BY: _____

REVIEWED BY: _____

PORC REVIEW: _____

APPROVED BY: _____

EFFECTIVE DATE: _____

INDIAN POINT 3

OFFSITE DOSE CALCULATION MANUAL

Revision ~~11~~ 12

ODCM

TABLE OF CONTENT

		PAGE
Table of Contents		i
List of Tables		iv
List of Figures		vi
References		vii
PART - I	**RADIOLOGICAL EFFLUENT CONTROLS**	
Chapter 1.0	**DEFINITIONS**	**1-1**
Chapter 2/3.0	**RADIOLOGICAL EFFLUENT CONTROLS AND SURVEILLANCE REQUIREMENTS**	
	2/3.1 Radioactive Liquid Effluent Monitoring Instrumentation	**2/3-1**
	2/3.2 Radioactive Gaseous Effluent Monitoring Instrumentation	**2/3-7**
	2/3.3 Radioactive Liquid Effluents	**2/3-12**
	2/3.3.1 Liquid Effluent Concentration	**2/3-12**
	2/3.3.2 Dose From Liquid Effluents	**2/3-15**
	2/3.3.3 Liquid Radwaste Treatment System	**2/3-16**
	2/3.4 Radioactive Gaseous Effluents	**2/3-17**
	2/3.4.1 Gaseous Effluent Dose Rates	**2/3-17**
	2/3.4.2 Dose From Noble Gases	**2/3-21**
	2/3.4.3 Dose From Iodine-131, Tritium, and Radionuclides in Particulate Form	**2/3-22**
	2/3.4.4 Gaseous Radwaste Treatment System	**2/3-23**
	2/3.5 NOT USED	
	2/3.6 Total Dose	**2/3-24**
	2/3.7 Radiological Environmental Monitoring Program	**2/3-26**
	2/3.8 Land Use Census	**2/3-37**
	2/3.9 Interlaboratory Comparison Program	**2/3-38**
Chapter 4.0	**BASES**	**4-1**

ODCM

TABLE OF CONTENT

		PAGE
Chapter 5.0	**REPORTING REQUIREMENTS**	
	5.1 Semiannual Radioactive Effluent Release Report	**5-1**
	5.2 Annual Radiological Environmental Operating Report	**5-4**
	5.3 Major Changes To Radioactive Liquid, Gaseous and Solid Waste Treatment Systems	**5-5**
PART - II	**OFFSITE DOSE CALCULATION MANUAL**	
Chapter 1.0	INSTRUMENTATION AND CONTROL	
	1.1 Effluent Monitoring System Description	1-1
	1.2 Setpoints	1-1
	1.2.1 Setpoints for Gaseous Effluent Monitors	1-1
	1.2.2 Setpoints for Liquid Effluent Monitors	1-2
Chapter 2.0	LIQUID EFFLUENTS	
	2.1 Liquid Effluent Releases - General Information	2-1
	2.2 Liquid Effluent Concentrations	2-5
	2.3 Liquid Effluent Dose Calculation Requirements	2-8
	2.4 Dose Methodology (Computer Calculation)	2-9
	2.5 Backup Dose Methodologies	2-12
	2.6 Site Specific Bioaccumulation and Dose Factors	2-12
Chapter 3.0	GASEOUS EFFLUENTS	
	3.1 Gaseous Effluents Releases-General Information	3-1
	3.2 Gaseous Effluent Dose Calculation Requirements	3-5
	3.3 Dose Calculations Methodology (Computer Calculation)	3-6
	3.3.1 Instantaneous Dose Rates - Noble Gas Releases	3-6
	3.3.2 Instantaneous Dose Rates - Radioiodine 131 and Particulate Releases	3-8
	3.3.3 Time Average Dose - Noble Gas Releases	3-9

ODCM

TABLE OF CONTENT

		PAGE
	3.3.4 Time Average Dose - Radioiodines and Particulates	3-12
	3.4 Backup Dose Methodologies	3-21
	3.4.1 Instantaneous Dose Rates - Noble Gas Releases	3-21
	3.4.2 Instantaneous Dose Rates - Radioiodine 131 and Particulate Release	3-22
	3.4.3 Time Average Dose - Noble Gas Releases	3-22
	3.4.4 Time Average Dose - Radioiodine 131 and Particulate Releases	3-24
	3.5 Calculation of Meteorological Dispersion Factors	3-24
	3.6 Justification for the Use of the Finite Cloud Assumption for Assessing Site Boundary Dose	3-28
	Appendix 3-A Calculation of Allowable Release Rates	3-79
Chapter 4.0	SAMPLE LOCATIONS	4-1
Appendix B -	Detection Limits	4-7

LIST OF TABLES

		PAGE
PART - I	**RADIOLOGICAL EFFLUENT CONTROLS**	
2.1-1	**Radioactive Liquid Effluent Monitoring Instrumentation**	**2/3-2**
3.1-1	**Radioactive Liquid Effluent Monitoring Instrumentation Surveillance Requirements**	**2/3-5**
2.2-1	**Radioactive Gaseous Effluent Monitoring Instrumentation**	**2/3-8**
3.2-1	**Radioactive Gaseous Effluent Monitoring Instrumentation Surveillance Requirements**	**2/3-10**
3.3-1	**Radioactive Liquid Waste Sampling and Analysis Program**	**2/3-13**
3.4-1	**Radioactive Gaseous Waste Sampling and Analysis Program**	**2/3-18**
2.7-1	**Radiological Environmental Monitoring Program**	**2/3-28**
2.7-2	**Reporting Levels For Radioactivity Concentrations In Environmental Samples**	**2/3-34**
3.7-1	**Detection Capabilities For Environmental Sample Analysis**	**2/3-35**
PART - II	**ODCM**	
1-1	Effluent Monitoring System Data	1-5
2-1	Adult Liquid Effluent Dose Factors	2-14
2-2	Teen Liquid Effluent Dose Factors	2-16
2-3	Child Liquid Effluent Dose Factors	2-18
2-4	Liquid Effluent Bioaccumulation Factors	2-20
3-1a	Inhalation Dose Factors for Adult	3-30
3-1b	Inhalation Dose Factors for Teen	3-32
3-1c	Inhalation Dose Factors for Child	3-34
3-1d	Inhalation Dose Factors for Infant	3-36
3-2	Ground Plan Dose Factors	3-38
3-3a	Ingestion Dose Factors for Adult	3-40
3-3b	Ingestion Dose Factors for Teen	3-42
3-3c	Ingestion Dose Factors for Infant	3-44
3-3d	Ingestion Dose Factors for Child	3-46
3-4	Total Body Dose Factors (Ki) from Noble Gases (Gamma)	3-48
3-5	Skin Dose Factors (Li) from Noble Gases (Beta)	3-49
3-6	Air Dose Factors (Mi) from Noble Gases (Gamma)	3-50

LIST OF TABLES

		PAGE
3-7	Air Dose Factors (Ni) from Noble Gases (Beta)	3-51
3-8	Dose Factors for Site Boundary Using Standard Isotope Mixture	3-52
3-9	Locations of Site Boundary and Nearest Residence	3-54
3-10a	Adult Inhalation Ri(I)	3-55
3-10b	Teen Inhalation Ri(I)	3-57
3-10c	Child Inhalation Ri(I)	3-59
3-10d	Infant Inhaltion Ri(I)	3-61
3-11a	Adult Ingestion Ri(V)	3-63
3-11b	Teen Ingestion Ri(V)	3-65
3-11c	Child Ingestion Ri(V)	3-67
3-12a	Adult Grass/Cow/Milk Ri(C)	3-69
3-12b	Teen Grass/Cow/Milk Ri(C)	3-71
3-12c	Child Grass/Cow/Milk Ri(C)	3-73
3-12d	Infant Grass/Cow/Milk Ri(C)	3-75
3-13	Ground Plane Dose Factors Ri(G) and Ri(S)	3-77
4-1	Indian Point Station - Environmental Sampling Station Points	4-4

LIST OF FIGURES

		PAGE
PART - I	**RADIOLOGICAL EFFLUENT CONTROLS**	
Figure 1-1	**Map Defining Unrestricted Areas for Radioactive Gaseous and Liquid Effluents**	**1-4**
PART - II	**ODCM**	
Figure 1-1	Map Defining Unrestricted Areas for Radioactive Gaseous and Liquid Release Points	1-4
Figure 2-1	Radioactive Liquid Waste Effluent System Flow Diagram	2-21
Figure 3-1	Gaseous Radioactive Waste Effluent System Flow Diagram	3-88
Figure 4-1	Radiological Environmental Monitoring Sampling Stations - Near Site	4-2
Figure 4-2	Radiological Environmental Monitoring Sampling Stations - Away from Site	4-3

REFERENCES

1. U.S. Nuclear Regulatory Commission, "Preparation of Radiological Effluent Technical Specifications for Nuclear Power Plants", USNRC Report NUREG-0133, Washington D.C. 20555, October 1978.

2. M.E. Wrenn and J. W. Lentsch, "The Fate of Gamma-Emitting Radionuclides Released into the Hudson River Estuary and an Evaluation of Their Environmental Significance", New York University Medical Center, Institute of Environmental Medicine, 1974.

3. Regulatory Guide 1.109, "Calculation of Annual Doses to Man from Routine Releases of Reactor Effluents for the Purpose of Evaluating Compliance with 10CFR50, Appendix I, Revision 1, USNRC Washington D.C. 20555, October 1977.

4. "An Evaluation to Demonstrate the Compliance of the Indian Point Reactors with the Design Objectives of 10CFR50, Appendix I", Consolidated Edison Company of New York, Inc. and Power Authority of the State of New York, February 1977.

5. U.S. Nuclear Regulatory Commission, "XOQDOQ Program for the Meteorological Evaluation of Routine Effluent Releases at Nuclear Power Stations", USNRC Report NUREG-0324, Washington D.C. 10555, September 1977.

6. "Semi-Annual Report of Radioactivity in Solid Wastes and Releases of Radioactive Materials in Liquid and Gaseous Effluents for Indian Point Three", Power Authority of the State of New York, January 1, 1978 to June 30, 1980.

7. "Environmental Technical Specification Requirements for Indian Point Nuclear Generating Unit Number 3", Power Authority of the State of New York, December 12, 1975.

8. U.S. Nuclear Regulatory Commission, "Radiological Effluent Technical Specification for PWR's", USNRC Report NUREG-0472, Washington D.C. 20555.

9. Regulatory Guide 1,113, "Estimating Aquatic Dispersion of Effluents from Accidental and Routine Reactor Releases for the Purpose of Implementing Appendix ", Revision 1, USNRC, Washington D.C. 10555, October 1977.

10. AP-11 - Indian Point No. 3 Nuclear Power Plant Administrative Procedure, "Radioactive Effluents Control Program".

11. NUREG/CR-4007, 1984, "Lower Limit of Detection: Definition and Elaboration of a Proposed Position for Radiological Effluent and Environmental Measurements".

12. New York University Medical Center, "Radioecological Studies of the Hudson River Progress Report (1986-1987)", N.Y.U. New York, New York 10016, March 1988.

13. IPI-DM-153, "Antimony Dose Factors", IPS Memorandum to M. Kerns from D. Mayer, August 8, 1988.

14. New York University Medical Center, "Radiological Studies of the Hudson River Progress Report (1987-1988)", N.Y.U. New York, New York 10016, September 1988.

15. USNRC Regulatory Guide 1.111, "Methods of Estimating Atmospheric Transport and Dispersion of Gaseous Effluents in Routine Releases from Light-Water-Cooled Reactors," U.S. Nuclear Regulatory Commission (October 1977, Rev. 1).

16. CRE Computer Code AEOLUS-3, "A Computer Code for the Determination of Atmospheric Dispersion and Deposition of Nuclear Power Plant Effluents During Continuous, Intermittent and Accident Conditions in Open-Terrain Sites, Coastal Sites and Deep-River Valleys," RAD-004, Version 1, Level 2 (June 1991).

REFERENCES

17. CRE Engineering Calculation IP3-CALC-RAD-00001, "IP3 - Revised ODCM Atmospheric Dispersion Parameters (Multi-Year Hourly Data, Mixed-Mode Releases and Valley Effects)," by John N. Hamawi (July 1991).

18. USNRC Regulatory Guide 1.23, "Onsite Meteorological Programs," U.S. Nuclear Regulatory Commission (2/17/72) (and proposed revisions).

19. USNRC Regulatory Guide 1.145, "Atmospheric Dispersion Models for Potential Accident Consequence Assessments at Nuclear Power Plants," U.S. Nuclear Regulatory Commission (August 1979).

20. D. H. Slade, Ed., "Meteorology and Atomic Energy - 1968," USAEC, TID-24190 (1968).

21. WCRE-93-157, "IP3-Annual Average Atmospheric Dispersion and Deposition factors for Ground-Level Release, December , 1993 Memorandum Hamawi to Mayer.

1.0 DEFINITIONS

1.1 **ACTION**

That part of a Control that prescribes remedial measures required under designated conditions.

1.2 CHANNEL CALIBRATION

Adjustment of channel output such that it responds, with acceptable range and accuracy, to known values of the parameter which the channel measures. Calibration shall encompass the entire channel, including alarm or trip, and shall be deemed to include the channel functional test.

1.3 CHANNEL CHECK

A qualitative determination of acceptable operability by observation of channel behavior during operation. This determination shall include, where possible, comparison of the channel with other independent channels measuring the same variable.

1.4 CHANNEL FUNCTIONAL TEST

Injection of a simulated signal into the channel to verify that it is operable, including alarm and/or trip initiating action.

1.5 **EFFLUENT CONCENTRATION**

The EFFLUENT CONCENTRATION is that concentration of a radionuclide specified in 10 CFR 20, Table 2 of Appendix B.

1.6 GASEOUS RADWASTE TREATMENT SYSTEM

A GASEOUS RADWASTE TREATMENT SYSTEM is any system designed and installed to reduce radioactive gaseous effluents by collecting primary coolant system offgases from the primary system and providing for delay or holdup for the purpose of reducing the total radioactivity prior to release to the environment.

1.7 **LIQUID RADWASTE TREATMENT SYSTEM**

A LIQUID RADWASTE TREATMENT SYSTEM is any system designed and installed to reduce radioactive liquid effluents by collecting liquid radwaste and providing for processing capability and/or holdup for the purpose of reducing and monitoring the total radioactivity prior to release to the environment.

1.8 MAXIMUM PERMISSIBLE CONCENTRATION WATER (MPCW)

MPCW is that concentration of a radionuclide equal to 10 times the concentration of a radionuclide specified in 10 CFR 20, Appendix B, Table 2, Column 2.

1.9 MEMBER(S) OF THE PUBLIC

MEMBER(S) OF THE PUBLIC **means any individual except when that individual is receiving an occupational dose** ~~shall include all persons who are not occupationally associated with the plant. This category does not include employees of either utility, their contractors or vendors. Also excluded from this category are persons who enter the site to service equipment or to make deliveries. This category does include persons who use portions of the sit for recreational, occupational or other purposes not associated with the plant~~.

1.10 **OCCUPATIONAL DOSE**

Occupational dose means the dose received by an individual in the course of employment in which the individual's assigned duties involve exposure to radiation or to radioactive material from licensed and unlicensed sources of radiation, whether in the possession of the licensee or other person. Occupational dose does not include dose received from background radiation, from any medical administration the individual has received, from exposure administered to individuals administered radioactive material and released in accordance with 35.75, from voluntary participation in medical research programs, or as a member of the public.

1.11 OFFSITE DOSE CALCULATION MANUAL (ODCM)

The OFFSITE DOSE CALCULATION MANUAL shall contain the current methodology and parameters used in the calculation of offsite doses **resulting from** ~~due to~~ radioactive gaseous and liquid effluents, in the calculation of gaseous and liquid effluent monitoring Alarm/Trip Setpoints, and in the conduct of the ~~environmental radiological monitoring program~~ **Radiological Environmental Monitoring Program. The ODCM shall also contain (1) the Radioactive Effluent Controls and Radiological Environmental Monitoring Programs required by Appendix A Technical Specification 6.8.4 and (2) descriptions of the information that should be included in the Annual Radiological Environmental Operating and Radioactive Effluent Release Reports required by Appendix A Technical Specifications 4.3.2.1 and 4.3.2.2.**

1.12 OPERABLE - OPERABILITY

Properly installed in the system and capable of performing the intended functions in the intended manner as verified by testing and tested at the frequency required by the Radiological Effluent Controls. Implicit in this definition shall be the assumption that all necessary attendant controls, electrical power source, cooling or seal water, lubrication or other auxiliary equipment that are required for the system, subsystem, train, component or device to perform its function(s) are also capable of performing their related support function(s).

1.13 PROCESS CONTROL PROGRAM (PCP)

The PROCESS CONTROL PROGRAM shall contain the current formula**s**, sampling, analyses, tests, and determinations to be made to ensure that the processing and packaging of solid radioactive wastes based on demonstrated processing of actual or simulated wet solid wastes will be accomplished in such a way as to assure compliance with 10 CFR Part**s** 20**, 61,** ~~10 CFR Part~~ 71, and Federal and State regulations and other requirements governing the disposal of **solid** radioactive waste.

1.14 PURGE - PURGING

PURGE or PURGING is the controlled process of discharging air or gas from a confinement in such a manner that replacement air or gas is required to purify the confinement.

1.15 RATED THERMAL POWER (RTP)

RTP shall be a total reactor core heat transfer rate to the reactor coolant of 3025 MWt. ("Rated Power" and "Rated Thermal Power" are used interchangeably throughout the Technical Specifications).

1.16 SITE BOUNDARY

The SITE BOUNDARY (see Figure **1-1** ~~5.8-1~~) **means** ~~shall be~~ that line beyond which the land **or property** is **not** ~~neither~~ owned, ~~nor~~ leased, **or** ~~nor~~ otherwise controlled by either site licensee.

1.17 SOURCE CHECK

A SOURCE CHECK shall be the qualitative assessment of channel response when the channel sensor is exposed to a source of increased radioactivity.

1.18 **THERMAL POWER**

THERMAL POWER shall be the total reactor core heat transfer rate to the reactor coolant.

1.19 UNRESTRICTED AREA

An UNRESTRICTED AREA (see Figure **1-1** ~~5.8-1~~) shall be any area at or beyond the SITE BOUNDARY access to which is not controlled by either site licensee for purposes of protection of individuals from exposure to radiation and radioactive materials, or any area within the SITE BOUNDARY used for residential quarters or for industrial, commercial, institutional, and/or recreational purposes. The UNRESTRICTED AREA boundary may coincide with the exclusion (fenced) area boundary, as defined in 10 CFR 100.3(a), but the UNRESTRICTED AREA does not include areas over water bodies. The concept of UNRESTRICTED AREAS, established at or beyond the SITE BOUNDARY, is utilized in the LIMITING CONDITIONS FOR OPERATION to keep levels of radioactive materials in liquid and gaseous effluents as low as is reasonably achievable, pursuant to 10 CFR 50.36.

1.20 VENTILATION EXHAUST TREATMENT SYSTEM

A VENTILATION EXHAUST TREATMENT SYSTEM is any system designed and installed to reduce gaseous radioiodine or radioactive material in particulate form in effluents by passing ventilation or vent exhaust gases through charcoal absorbers and/or HEPA filters for the purpose of removing iodines or particulates from the gaseous exhaust stream prior to the release to the environment. Such a system is not considered to have any effect on noble gas effluents. Engineered Safety Feature (ESF) atmospheric cleanup systems are not considered to be VENTILATION EXHAUST TREATMENT SYSTEM components.

Figure **1-1** ~~5.8-1~~

(Insert Figure of Site Showing Site Boundary and Unrestricted Areas)

2/3.0 RADIOLOGICAL EFFLUENT CONTROLS AND SURVEILLANCE REQUIREMENTS

2.1 Radioactive Liquid Effluent Monitoring Instrumentation

CONTROL:

In accordance with Appendix A Technical Specification 6.8.4.a.1, the ~~The~~ radioactive liquid effluent monitoring instrumentation channels shown in Table 2.1-1 shall be OPERABLE with their alarm/trip setpoints set to ensure that the limits of **Control** ~~Specification~~ 2.3.1 are not exceeded. The alarm/trip setpoints of these channels shall be determined and adjusted in accordance with the methodology and parameters in the OFFSITE DOSE CALCULATION MANUAL (ODCM).

APPLICABILITY: ~~Applies to the operating status of the radioactive liquid effluent monitoring instrumentation as~~ **As shown in Table 2.1-1.**

~~SPECIFICATION~~ **ACTION**:

A. With a radioactive liquid effluent monitoring instrumentation channel alarm/trip setpoint less conservative than required by the above **Control** ~~Specification~~, **immediately** ~~without delay~~ suspend the release of radioactive liquid effluents monitored by the affected channel, or declare the channel inoperable, or change the setpoint so it is acceptably conservative.

B. With less than the minimum number of radioactive liquid effluent monitoring instrumentation channels OPERABLE, take the ACTION shown in Table 2.1-1. Exert best efforts to return the instruments to OPERABLE status within 30 days and if unsuccessful, explain in the next **Annual** ~~Semiannual~~ Radioactive Effluent Release Report**, pursuant to Reporting Requirement 5.1,** why the inoperability was not corrected **within this time frame** ~~in a timely manner~~.

C. Report all deviations in the Annual Radioactive Effluent Release Report.

3.1 SURVEILLANCE REQUIREMENTS:

Each radioactive liquid effluent monitoring instrumentation channel shall be demonstrated OPERABLE by performance of the CHANNEL CHECK, SOURCE CHECK, CHANNEL CALIBRATION and CHANNEL FUNCTIONAL TEST operations at the frequencies shown in Table 3.1-1.

TABLE 2.1-1

RADIOACTIVE LIQUID EFFLUENT MONITORING INSTRUMENTATION		
INSTRUMENT	MINIMUM CHANNELS OPERABLE*	ACTION
1. GROSS RADIOACTIVITY MONITORS PROVIDING ALARM AND AUTOMATIC TERMINATION OF RELEASE		
a. Liquid Radwaste Effluent Line** (R-18 and R-61)	(1)	1
b. Steam Generator Blowdown Effluent Line (R-19)	(1)	2
2. GROSS BETA OR GAMMA RADIOACTIVITY MONITORS PROVIDING ALARM BUT NOT PROVIDING AUTOMATIC TERMINATION OF RELEASE		
a. Service Water System Effluent Line (R-16A, R-16B, R-23)	(1)	3
3. FLOW RATE MEASUREMENT DEVICES		
a. Liquid Radwaste Effluent Line	(1)	4
b. Steam Generator Blowdown Effluent Line	(1)	4
4. RADIOACTIVITY RECORDERS***		
a. Liquid Radwaste Effluent Line	(1)	1
b. Steam Generator Blowdown Effluent Line	(1)	2
5. TANK LEVEL INDICATING DEVICES****		
a. Refueling Water Storage Tank	(1)	5
b. Primary Water Storage Tank	(1)	5
c. Monitor Tank #31	(1)	5
d. Monitor Tank #32	(1)	5

TABLE 2.1-1 *(Continued)*

TABLE NOTATION

* During release by the pathway, channels shall be OPERABLE and in service during such release on a continuous, uninterrupted basis. Except that outages are permitted, within the time frame and limitations of the specified action, for the purpose of maintenance of required tests, checks and calibration.

** The condensate polisher regenerative waste release path does not need to be monitored unless a primary to secondary side leak is present.

*** Required only if alarm/trip set point is based on recorder-controller.

**** Tanks included in this **Control** ~~specification~~ are those outdoor tanks that are not surrounded by liners, dikes, or walls capable of holding the tank contents and do not have tank overflows and surrounding area drains connected to the liquid radwaste treatment system.

TABLE 2.1-1 *(Continued)*

TABLE NOTATION

ACTION 1 - With the number of channels OPERABLE less than required by the Minimum Channels OPERABLE requirement, effluent releases may continue provided that prior to initiating a release:

a. At least two independent samples are analyzed in accordance with **Radiological Effluent Control Surveillance Requirement** ~~Specification~~ 3.3.1.A,

and

b. At least two technically qualified members of the Facility Staff independently verify the release rate calculations and discharge line valving:

Otherwise, suspend release of radioactive effluents via this pathway.

ACTION 2 - With the number of channels OPERABLE less than required by the Minimum Channels OPERABLE requirement, effluent releases via this pathway may continue provided grab samples are analyzed either for principal gamma emitters or for gross radioactivity (beta or gamma) at a lower limit of detection of at least 5×10^{-7} microcurie/ml (as Cs-137):

a. At least once per 12 hours when the specific activity of the secondary coolant is greater than 0.01 microcurie/gram DOSE EQUIVALENT I-131.

b. At least once per 24 hours when the specific activity of the secondary coolant is less than or equal to 0.01 microcurie/gram DOSE EQUIVALENT I-131.

ACTION 3 - With the number of channels OPERABLE less than required by the Minimum Channels OPERABLE requirement, effluent releases via this pathway may continue provided that, at least once per 12 hours, grab samples are collected and analyzed for gross radioactivity (beta or gamma) at a lower limit of detection of at least 5×10^{-7} microcurie/ml (as Cs-137).

ACTION 4 - With the number of channels OPERABLE less than required by the Minimum Channels OPERABLE requirement, effluent releases via this pathway may continue provided the flow rate is estimated at least once per 4 hours during actual releases. Pump performance curves may be used to estimate flow.

ACTION 5 - With the number of channels OPERABLE less than required by the Minimum Channels OPERABLE requirement, liquid additions to this tank may continue provided the tank liquid level is estimated during all liquid additions to the tank.

TABLE 3.1-1

RADIOACTIVE LIQUID EFFLUENT MONITORING INSTRUMENTATION
SURVEILLANCE REQUIREMENTS

INSTRUMENT	CHANNEL CHECK	SOURCE CHECK	CHANNEL CALIBRA-TION	CHANNEL FUNC-TIONAL TEST
1. GROSS RADIOACTIVITY MONITORS PROVIDING ALARM AND AUTOMATIC TERMINATION OF RELEASE				
a. Liquid Radwaste Effluent Line (R-18 and R-61*****)	D*	D*	24M(3)	Q(1)*
b. Steam Generator Blowdown Effluent Line (R-19)	D*	M*	24M(3)	Q(1)*
2. GROSS BETA OR GAMMA RADIOACTIVITY MONITORS PROVIDING ALARM BUT NOT PROVIDING AUTOMATIC TERMINATION OF RELEASE				
a. Service Water System Effluent Line (R-16A and R-16B)	D*	M*	24M(3)	Q(2)*
b. Service Water System Effluent Line (R-23)	D*	M*	18M(3)	Q(2)*
3. FLOW RATE MEASUREMENT DEVICES				
a. Liquid Radwaste Effluent Line	D(4)	N.A.	18M	Q
b. Steam Generator Blowdown Effluent Line	D(4)	N.A.	24M	N.A.
4. RADIOACTIVITY RECORDERS				
a. Liquid Radwaste Effluent Line	D*	N.A.	24M	Q****
b. Steam Generator Blowdown Effluent Line	D*	N.A.	24M	Q****
5. TANK LEVEL INDICATING DEVICES***				
a. Refueling Water Storage Tank	D**	N.A.	18M	18M
b. Primary Water Storage Tank	D**	N.A.	24M	24M
c. Monitor Tank #31	D**	N.A.	18M	18M
d. Monitor Tank #32	D**	N.A.	18M	18M

TABLE 3.1-1 *(Continued)*

TABLE NOTATION

* When this pathway is utilized for releases, with frequency no more than indicated.

** During liquid additions to the tank.

*** Tanks included in this **Control** ~~specification~~ are those outdoor tanks that are not surrounded by liners, dikes, or walls capable of holding the tank contents and do not have tank overflows and surrounding area drains connected to the liquid radwaste treatment system.

**** Required only if alarm/trip setpoint is based on recorder-controller.

***** The condensate polisher regenerative waste release path does not need to be monitored unless a primary to secondary leak is present.

(1) The CHANNEL FUNCTIONAL TEST shall also demonstrate that automatic isolation of this pathway and control room alarm annunciation occur if the following condition exists:

1. Instrument indicates measured levels above the alarm/trip setpoint.

(2) The CHANNEL FUNCTIONAL TEST shall also demonstrate that control room alarm annunciation occurs if any of the following conditions exists:

1. Instrument indicates measured levels above the alarm setpoint.

2. Instrument controls not set in operate mode.

(3) Radioactive calibration standards used for **CHANNEL CALIBRATIONS** ~~channel calibrations~~ shall be traceable to the **National Institute of Standards and Technology (NIST)** ~~National Bureau of Standards~~ or an aliquot of calibration solution shall be analyzed with instrumentation which is calibrated with **NIST** ~~NBS~~ traceable standards. (Standards from suppliers who participate in measurement assurance activities with **NIST** ~~NBS~~ are acceptable).

(4) CHANNEL CHECK shall consist of verifying indication of flow during periods of release. CHANNEL CHECK shall be made at least once per 24 hours on days on which continuous, periodic, or batch releases are made.

D	Daily	M	Monthly
N.A.	Not Applicable	Q	Quarterly
18M	At least once per 18 months.		
24M	At least once per 24 months.		

2.2 RADIOACTIVE GASEOUS EFFLUENT MONITORING INSTRUMENTATION

CONTROL:

In accordance with Appendix A Technical Specification 6.8.4.a.1, the ~~The~~ radioactive gaseous effluent monitoring instrumentation channels shown in Table 2.2-1 shall be OPERABLE with their alarm/trip setpoints set to ensure that the limits of **Control** ~~Specification~~ 2.4.1 are not exceeded. The alarm/trip setpoints of these channels shall be determined and adjusted in accordance with the methodology and parameters in the ODCM.

APPLICABILITY: ~~Applies to the operating status of the radioactive gaseous effluent monitoring instrumentation as~~ **As shown in Table 2.2-1.**

~~SPECIFICATION~~ **ACTION**:

A. With a radioactive gaseous effluent monitoring instrumentation channel alarm/trip setpoint less conservative than required by the above **Control** ~~Specification~~, **immediately** ~~without delay~~ suspend the release of radioactive gaseous effluents monitored by the affected channel or declare the channel inoperable, or change the setpoint so it is acceptably conservative.

B. With less than the minimum number of radioactive gaseous effluent monitoring instrumentation channels OPERABLE, take the ACTION shown in Table 2.2-1. Exert best efforts to return the instruments to OPERABLE status within 30 days and, if unsuccessful, explain in the next **Annual** ~~Semiannual~~ Radioactive Effluent Release Report**, pursuant to Reporting Requirement 5.1,** why the inoperability was not corrected within this time frame.

C. Report all deviations in the Annual Radioactive Effluent Release Report.

3.2 SURVEILLANCE REQUIREMENTS:

Radioactive gaseous effluent monitoring instrumentation channels shall be demonstrated OPERABLE by performance of the CHANNEL CHECK, SOURCE CHECK, CHANNEL CALIBRATION and CHANNEL FUNCTIONAL TEST operations at the frequencies shown in Table 3.2-1.

TABLE 2.2-1

RADIOACTIVE GASEOUS EFFLUENT MONITORING INSTRUMENTATION			
INSTRUMENT	MINIMUM CHANNELS OPERABLE	APPLICABILITY	ACTION
1. WASTE GAS HOLDUP SYSTEM			
a. Noble Gas Activity Monitor-Providing Alarm **(R-20)**	(1)	**	6
2. CONDENSER AIR EJECTOR			
a. Noble Gas Activity Monitor **(R-15)**	(1)	*	8
3. ENVIRONMENTAL RELEASE POINTS (PLANT VENT***, ADMIN. BUILDING, CONTROLLED AREA, RAD MACHINE SHOP)			
a. Noble Gas Activity Monitor **(R-14, R-27, R-46 and R-59)**	(1)	*	8, 11
b. Iodine Sampler	(1)	*	10
c. Particulate Sampler	(1)	*	10
d. Flow Rate Monitor	(1)	*	7
e. Sampler Flow Rate Monitor	(1)	*	7
4. CONTAINMENT PURGE SYSTEM			
a. Containment Noble Gas Activity - Monitor **(R-12)** Providing Alarm and Automatic Termination of Release	(1)	*	9

TABLE NOTATION

* Channels shall be **OPERABLE** ~~operable~~ and in service on a continuous basis during release via this pathway, except that outages are permitted, within the time frame of the specified action for the purpose of maintenance and performance of required tests, checks and calibrations.

** During waste gas holdup system operation (treatment for primary system offgases).

TABLE 2.2-1 *(Continued)*

*** This will also monitor releases from the Vent Header, Auxiliary Building Vents, Fuel Storage Building Vents, and the Rad Waste Area Vent.

ACTION 6 - With the number of channels OPERABLE less than that required by the Minimum Channels OPERABLE requirement, the radioactive content of the receiving gas decay tank shall be determined daily to ensure compliance with **Appendix B, Technical Specification 1.3.2** ~~2.4.6~~.

ACTION 7 - With the number of channels OPERABLE less than required by the Minimum Channels OPERABLE requirement, effluent releases via this pathway may continue provided the flow rate is estimated at least once per 4 hours.

ACTION 8 - With the number of channels OPERABLE less than required by the Minimum Channels OPERABLE requirement, effluent releases via this pathway may continue provided grab samples are taken at least once per 12 hours and these samples are analyzed for gross activity within 24 hours.

ACTION 9 - With the number of channels OPERABLE less than required by the Minimum Channels OPERABLE requirement, immediately suspend PURGING of radioactive effluents via this pathway. During containment building ventilation in the cold shutdown condition, continuous monitoring and automatic termination of release is not required. One continuous monitor at the final release point (plant vent) is sufficient.

ACTION **10** ~~11~~ - With the number of channels OPERABLE less than required by the Minimum Channels OPERABLE requirement, effluent releases via the effected pathway may continue provided samples are continuously collected with auxiliary sampling equipment as required in Table 3.4-1.

ACTION **11** ~~12~~ - With the number of channels OPERABLE less than that required by the Minimum Channels OPERABLE requirement for the plant vent, the contents of the radwaste gas decay tanks may be released to the environment provided that prior to initiating the release:

a. At least two independent samples of the tank contents are analyzed

and,

b. At least two technically qualified members of the facilities staff independently verify the release rate calculations and discharge valve lineup.

TABLE 3.2-1

RADIOACTIVE GASEOUS EFFLUENT MONITORING INSTRUMENTATION SURVEILLANCE REQUIREMENTS					
INSTRUMENT	CHANNEL CHECK	SOURCE CHECK	CHANNEL CALIBRATION	FUNCTIONAL TEST	MODES IN WHICH SURVEIL-LANCE REQUIRED
1. WASTE GAS HOLDUP SYSTEM					
a. Noble Gas Activity Monitor - Providing Alarm (R-20)	D	M	24M(2)	Q(1)***	*
2. CONDENSER AIR EJECTOR					
a. Noble Gas Activity Monitor (R-15)	D	M	24M(2)	Q(1)***	*
3. ENVIRONMENTAL RELEASE POINTS (PLANT VENT, ADMIN. BUILDING CONTROLLED AREA. VENT, RAD. MACHINE SHOP VENT)					
a. Noble Gas Activity Monitor (R-14, R-27,R-46, and R-59)	D	M	24M(2)	Q(1)***	*
b. Iodine Sampler	W	N.A.	N.A.	N.A.	*
c. Particulate Sampler	W	N.A.	N.A.	N.A.	*
d. Flow Rate Monitor	D	N.A.	18M	Q	*
e. Sampler Flow Rate Monitor	D	N.A.	18M	N.A.	*
4. CONTAINMENT PURGE SYSTEM					
a. Containment Noble Gas Activity Monitor**(R-12)** - Providing Alarm and Automatic Termination of Release	D	M	24M(2)	Q(1)***	*

TABLE NOTATION

* Surveillance is required at all times except when monitor has been removed from service in accordance with Table 2.2-1.

*** Will not include operation of automatic control functions.

TABLE 3.2-1 *(Continued)*

(1) The CHANNEL FUNCTIONAL TEST shall also demonstrate that control room alarm annunciation occurs if any of the following conditions exists:

1. Instrument indicates measured levels above the alarm setpoint.

2. Instrument controls not set in operate mode.

(2) Radioactive Calibration Standards used for **CHANNEL CALIBRATIONS** ~~channel calibrations~~ shall be traceable to the **National Institute of Standards and Technology (NIST)** ~~National Bureau of Standards~~ or an aliquot of calibration gas shall be analyzed with instrumentation which is calibrated with **NIST** ~~NBS~~ traceable standards (standards from suppliers which participate in measurement assurance activities with **NIST** ~~NBS~~ are acceptable).

D	Daily
M	Monthly
N.A.	Not Applicable
Q	Quarterly
18M	At least once per 18 months.
24M	At least once per 24 months.

2.3 RADIOACTIVE LIQUID EFFLUENTS

2.3.1 LIQUID EFFLUENT CONCENTRATION

CONTROL:

In accordance with Appendix A Technical Specifications 6.8.4.a.2 and 6.8.4.a.3, the ~~The~~ concentration of radioactive material released in liquid effluents to UNRESTRICTED AREAS shall be limited to **10 times the concentration values specified in Appendix B, Table 2, Column 2 to 10 CFR 20 for radionuclides other than dissolved or entrained noble gases** ~~the concentrations specified in 10 CFR 20.106(a)for radionuclides other than dissolved or entrained noble gases as calculated under 10 CFR 20.106(a).~~ For dissolved or entrained noble gases, the concentration shall be limited to 2×10^{-4} microcuries/ml.

APPLICABILITY: ~~Applies at~~ **At all times** ~~to the concentration of radioactive material released in liquid effluents~~.

~~SPECIFICATION~~ **ACTION**:

With the concentration of radioactive material released in liquid effluents to UNRESTRICTED AREAS exceeding **the above limits** ~~exceeding these limits~~, **immediately** ~~without delay~~ restore the concentration to within these limits.

3.3.1 SURVEILLANCE REQUIREMENTS:

A. Radioactive liquid wastes shall be sampled and analyzed according to the sampling and analysis program of Table **3.3.1-1** ~~3.3-1~~.

B. The results of the radioactivity analyses shall be used in accordance with the methodology and parameters in the ODCM to assure that the concentrations at the point of release are maintained within the limits of **Control** ~~Specification~~ 2.3.1.

TABLE 3.3.1-1 ~~3.3-1~~

RADIOACTIVE LIQUID WASTE SAMPLING AND ANALYSIS PROGRAM				
Liquid Release Type	Sampling Frequency	Minimum Analysis Frequency	Type of Activity Analysis	Lower Limit of Detection (LLD)[a] (uCi/ml)
A. Batch Waste Release Tanks[b]	B Each Batch	B Each Batch	Principal Gamma Emitters[c]	5×10^{-7}
			Mo-99, Ce-144	5×10^{-6}
			I-131	1×10^{-6}
	B One Batch/M	M	Dissolved & Entrained Gases (Gamma Emitters)	1×10^{-5}
	B Each Batch	M Composite[d]	H-3	1×10^{-5}
			Gross Alpha	1×10^{-7}
	B Each Batch	Q Composite[d]	Sr-89, Sr-90	5×10^{-8}
			Fe-55	1×10^{-6}
B. Continuous Releases [e,f]	3/W Composite[d]	W Composite[d]	Principal Gamma Emitters	5×10^{-7}
			Mo-99, Ce-144	5×10^{-6}
			I-131	1×10^{-6}
	M Grab Sample	M	Dissolved & Entrained Gases (Gamma Emitters)	1×10^{-5}
	W Composite[d]	M Composite[d]	H-3	1×10^{-5}
			Gross Alpha	1×10^{-7}
	W Composite[d]	Q Composite[d]	Sr-89, Sr-90	5×10^{-8}
			Fe-55	1×10^{-6}

TABLE 3.3.1-1 *(Continued)*

TABLE NOTATION

Frequency Notation

B = Batch
W = Weekly
M = Monthly
Q = Quarterly

[a]The LLD is defined, for purposes of these **Controls** ~~specifications~~, as the smallest concentration of radioactive material in a sample that will yield a net count, above system background, that will be detected with 95% probability with only 5% probability of falsely concluding that a blank observation represents a "real" signal. Equations used in the calculation of the LLD for a particular measurement system are presented in the ODCM.

It should be recognized that the LLD is defined as an a priori (before the fact) limit representing the capability of a measurement system and not as an a posteriori (after the fact) limit for a particular measurement.

[b]A batch release is the discharge of liquid wastes of a discrete volume. Prior to samplings for analyses, each batch shall be isolated, and then thoroughly mixed to assure representative sampling. (Steam Generators may be considered a batch release for reporting purpose during shutdown condition but should be analyzed in accordance with the continuous release section of table.)

[c]The principal gamma emitters for which the LLD **Control** ~~specification~~ applies exclusively are the following radionuclides: Mn-54, Fe-59, Co-58, Co-60, Zn-65, Cs-134, Cs-137; and Ce-141. This list does not mean that only these nuclides are to be monitored. Other gamma peaks that are identifiable, together with those of the above nuclides, shall also be analyzed and reported in the **Annual** ~~Semiannual~~ Radioactive Effluent Release Report pursuant to **Reporting Requirement 5.1** ~~Specification 5.3.3.1~~.

[d]A composite sample is one in which the quantity of liquid sampled is proportional to the quantity of liquid waste discharged and in which the method of sampling employed results in a specimen that is representative of the liquids released.

[e]A continuous release is the discharge of liquid wastes of a nondiscrete volume, e.g., from a volume of a system that has an input flow during the continuous release.

[f]Steam generator feedwater shall be monitored for principal gamma emitters when steam generator blowdown exceeds $3x10^{-5}$ uci/ml and releases to the environment. This activity concentration is evaluated in accordance with the methodology presented in the ODCM.

2.3.2 DOSE FROM LIQUID EFFLUENTS

CONTROL:

In accordance with Appendix A Technical Specifications 6.8.4.a.4 and 6.8.4.a.5, the ~~The~~ dose or dose commitment to a MEMBER OF THE PUBLIC from radioactive materials in liquid effluents released, from each reactor unit, to UNRESTRICTED AREAS shall be limited:

1. During any calendar quarter to less than or equal to 1.5 mrems to the total body and to less than or equal to 5 mrems to any organ,

   and

2. During any calendar year to less than or equal to 3 mrems to the total body and to less than or equal to 10 mrems to any organ.

APPLICABILITY: ~~Applies at~~ **At all times** ~~to the dose from radioactive material released in liquid effluents~~.

~~SPECIFICATION~~ **ACTION**:

With the calculated dose from the release of radioactive materials in liquid effluents exceeding any of the above limits, in lieu of a Licensee Event Report, prepare and submit to the Commission within 30 days, pursuant to **Appendix A Technical** Specification **6.9.2** ~~5.3.2~~, a Special Report that identifies the cause(s) for exceeding the limit(s) and defines the corrective action(s) that have been taken to reduce the release(s) and the proposed corrective actions to be taken to assure that subsequent releases will be in compliance with the above limits. This Special Report shall also include (1) the results of radiological analyses of the drinking water source and (2) the radiological impact on finished drinking water supplies with regard to the requirements of 40 CFR Part 141.*

3.3.2 SURVEILLANCE REQUIREMENTS:

Cumulative dose contributions from liquid effluents for the current calendar quarter and the current calendar year shall be determined in accordance with the methodology and parameters in the ODCM at least once per month.

---

* Applicable only if drinking water supply is taken from the receiving water body within 3 miles of the plant discharge. In the case of river sited plants this is 3 miles downstream only.

2.3.3 LIQUID RADWASTE TREATMENT SYSTEM

CONTROL:

In accordance with Appendix A Technical Specification 6.8.4.a.6, the ~~The~~ liquid radwaste treatment system shall be used when the projected doses due to the liquid effluent, from each reactor unit, to UNRESTRICTED AREAS would exceed 0.06 mrem to the total body or 0.2 mrem to any organ in a 31 day period.

APPLICABILITY: ~~Applies at~~ **At all times** ~~to the operation of the liquid radwaste treatment system~~.

~~SPECIFICATION~~ **ACTION**:

With radioactive liquid waste being discharged without treatment and in excess of the above limits, in lieu of a Licensee Event Report, prepare and submit to the Commission within 30 days, pursuant to **Appendix A Technical** Specification **6.9.2,** ~~5.3.2~~ a Special Report that includes the following information:

1. Explanation of why liquid radwaste was being discharged without treatment, identification of any inoperable equipment or subsystems, and the reason for the inoperability,

2. Action(s) taken to restore the inoperable equipment to OPERABLE status, and

3. Summary description of action(s) taken to prevent a recurrence.

3.3.3 SURVEILLANCE REQUIREMENTS:

Doses due to liquid releases from each reactor unit to UNRESTRICTED AREAS shall be projected at least once per month in accordance with the methodology and parameters in the ODCM **when the liquid radwaste treatment systems are not being fully utilized.**

2.4 RADIOACTIVE GASEOUS EFFLUENTS

2.4.1 GASEOUS EFFLUENT DOSE RATES

CONTROL:

In accordance with Appendix A Technical Specifications 6.8.4.a.3 and 6.8.4.a.7, the ~~The~~ dose rate due to radioactive materials released in gaseous effluents from the site to areas at and beyond the SITE BOUNDARY shall be limited to the following:

1. For noble gases: Less than or equal to **a dose rate of** 500 mrems/yr to the total body and less than or equal to **a dose rate of** 3000 mrems/yr to the skin,

   and

2. For iodine-131, for tritium, and for all radionuclides in particulate form with half lives greater than 8 days: Less than or equal to **a dose rate of** 1500 mrems/yr to any organ.

APPLICABILITY: ~~Applies at~~ **At all times** ~~to the dose rate due to radioactive materials released in gaseous effluents~~.

~~SPECIFICATIONS~~ **ACTION:**

With the dose rate(s) exceeding the above limits, **immediately** ~~without delay~~ restore the release rate to within the above limit(s).

3.4.1 SURVEILLANCE REQUIREMENTS:

A. The dose rate due to noble gases in gaseous effluents shall be determined to be within the above limits in accordance with the methodology and parameters in the ODCM.

B. The dose rate due to iodine-131, tritium, and all radionuclides in particulate form with half lives greater than 8 days in gaseous effluents shall be determined to be within the above limits in accordance with the methodology and parameters in the ODCM by obtaining representative samples and performing analyses in accordance with the sampling and analysis program specified in Table **3.4.1-1** ~~3.4-1~~.

TABLE 3.4.1-1 ~~3.4-1~~

RADIOACTIVE GASEOUS WASTE SAMPLING AND ANALYSIS PROGRAM				
Gaseous Release Type	Sampling Frequency	Minimum Analysis Frequency	Type of Activity Analysis	Lower Limit of Detection (LLD[a]) (uCi/cc)
A. Waste Gas Storage	B Each Tank Grab Sample	B Each Tank	Principal Noble Gas Gamma Emitters[b]	$1x10^{-4}$
B. Containment Purge	B Each PURGE Grab Sample	B Each PURGE	Principal Noble Gas Gamma Emitters[b]	$1x10^{-4}$
C. Condenser Air Ejector	Grab Sample	M	Principal Noble Gas Gamma Emitters[b]	$1x10^{-4}$
D. Environmental Release Points (Plant Vent, Admin. Bldg. Controlled Area Vent, Radioactive Machine Shop Vent)	M[c] Grab Sample	M[c]	Principal Noble Gas Gamma Emitters[b]	$1x10^{-4}$
	M[d,e] Grab	M[d,e]	H-3	$1x10^{-6}$
	Continuous[f]	W[g] Charcoal Sample	I-131	$1x10^{-12}$
	Continuous[f]	W[g] Particulate Sample	Principal Gamma Emitters[b] (I-131, Others)	$1x10^{-11}$
	Continuous[f]	M Composite Particulate Sample	Gross Alpha	$1x10^{-11}$
	Continuous[f]	Q Composite Particulate Sample	Sr-89, Sr-90	$1x10^{-11}$
	Continuous[f]	Noble Gas Monitor	Noble Gases Gross Beta or Gamma	$1x10^{-6}$

TABLE **3.4.1-1** ~~3.4-1~~ *(Continued)*

TABLE NOTATION

Frequency Notation

B = Batch
W = Weekly
M = Monthly
Q = Quarterly

[a]The LLD is defined, for purposes of these **Controls** ~~specifications~~, as the smallest concentration of radioactive material in a sample that will yield a net count, above system background, that will be detected with 95% probability with only 5% probability of falsely concluding that a blank observation represents a "real" signal. Equations used in the calculation of the LLD for a particular measurement system are presented in the ODCM.

It should be recognized that the LLD is defined as an a priori (before the fact) limit representing the capability of a measurement system and not as an a posteriori (after the fact) limit for a particular measurement.

[b]The principal gamma emitters for which the LLD **Control** ~~specification~~ applies exclusively are the following radionuclides: Kr-87, Kr-88, Xe-133, Xe-133m, Xe-135, and Xe-138 for gaseous emissions and Mn-54, Fe-59, Co-58, Co-60, Zn-65, Mo-99, Cs-134, Cs-137, Ce-141 and Ce-144 for particulate emissions. This list does not mean that only these nuclides are to be monitored. Other gamma peaks that are identifiable, together with those of the above nuclides, shall also be analyzed and reported in the **Annual** ~~Semiannual~~ Radioactive Effluent Release Report pursuant to **Reporting Requirement 5.1** ~~Specification 5.3.3.1~~.

[c]The main plant vent shall be sampled and analyzed following shutdown, startup, or a THERMAL POWER change (within one hour) exceeding 15 percent of RATED THERMAL POWER unless either (1) analysis shows that the DOSE EQUIVALENT I-131 concentration in the primary coolant has not increased more than a factor of 3: or (2) the noble gas activity monitor shows that effluent activity has not increased by more than a factor of 3. Under no circumstances would iodine samples be required more than once per day. Plant vent Tritium grab samples shall be taken at least once per 24 hours when the refueling canal is flooded unless continuous sampling equipment is in use.

[d]Plant vent tritium grab samples shall be taken at least once per 24 hours when the refueling canal is flooded unless continuous sampling equipment ~~in~~ is **in** use.

[e]Plant vent tritium grab samples shall be taken at least once per 7 days from the ventilation exhaust from the spent fuel pool area, whenever spent fuel is in the spent fuel pool unless continuous sampling equipment is in use.

TABLE 3.4.1-1 *(Continued)*

TABLE NOTATION

[f]The ratio of the sample flow rate to the sampled steam flow rate shall be known for the time period covered by each dose or dose rate calculation made in accordance with **Controls** ~~Specification~~ 2.4.1, 2.4.2 and 2.4.3.

[g]Samples shall be changed at least once per 7 days and analyses shall be completed within 48 hours after changing, or after removal from sampler. Sampling shall also be performed at least once per 24 hours for at least 7 days following each shutdown, startup or THERMAL POWER change exceeding 15 percent of RATED THERMAL POWER in one hour and analyses shall be completed within 48 hours of changing. When samples collected for 24 hours are analyzed, the corresponding LLDs may be increased by a factor of 10. This requirement does not apply if either (1) analysis shows that the DOSE EQUIVALENT I-131 concentration in the primary coolant has not increased more than a factor of 3; or (2) the noble gas monitor shows that effluent activity has not increased more than a factor of 3.

2.4.2 DOSE FROM NOBLE GASES

CONTROL:

In accordance with Appendix A Technical Specifications 6.8.4.a.5 and 6.8.4.a.8, the ~~The~~ air dose due to noble gases released in gaseous effluents, from each reactor unit, to areas at and beyond the SITE BOUNDARY shall be limited to the following:

1. During any calendar quarter: Less than or equal to 5 mrads for gamma radiation and less than or equal to 10 mrads for beta radiation.

   and,

2. During any calendar year: Less than or equal to 10 mrads for gamma radiation and less than or equal to 20 mrads for beta radiation.

APPLICABILITY: ~~Applies at~~ **At all times** ~~to air dose due to noble gases released in gaseous effluents~~.

~~SPECIFICATION~~ **ACTION**:

With the calculated air dose from radioactive noble gases in gaseous effluents exceeding any of the above limits, in lieu of a Licensee Event Report, prepare and submit to the Commission within 30 days, pursuant to **Appendix A Technical** Specification **6.9.2** ~~5.3.2~~, a Special Report that identifies the cause(s) for exceeding the limit(s) and defines the corrective actions that have been taken to reduce the releases and the proposed corrective actions to be taken to assure that subsequent releases will be in compliance with the above limits.

3.4.2 SURVEILLANCE REQUIREMENTS:

Cumulative dose contributions for the current calendar quarter and current calendar year for noble gases shall be determined in accordance with the ODCM at least once per month.

2.4.3 DOSE FROM IODINE-131, TRITIUM, AND RADIONUCLIDES IN PARTICULATE FORM

CONTROL:

In accordance with Appendix A Technical Specifications 6.8.4.a.5 and 6.8.4.a.9, the ~~The~~ dose to a MEMBER OF THE PUBLIC from iodine-131, tritium and all radionuclides in particulate form with half-lives greater than 8 days in gaseous effluents released, from each reactor unit, to areas at and beyond the SITE BOUNDARY shall be limited to the following:

1. During any calendar quarter: Less than or equal to 7.5 mrems to any organ

   and,

2. During any calendar year: Less than or equal to 15 mrems to any organ.

APPLICABILITY: ~~Applies at~~ **At all times** ~~to the dose due to iodine-131, tritium and all radionuclides in particulate form with half-lives greater than 8 days in gaseous effluents~~.

~~SPECIFICATION~~ **ACTION**:

With the calculated dose from the release of iodine-131, tritium, and radionuclides in particulate form with half lives greater than 8 days, in gaseous effluents~~,~~ exceeding any of the above limits, in lieu of a Licensee Event Report, prepare and submit to the Commission within 30 days, pursuant to **Appendix A Technical** Specification **6.9.2** ~~5.3.2~~, a Special Report that identifies the cause(s) for exceeding the limit and defines the corrective actions that have been taken to reduce the releases and the proposed corrective actions to be taken to assure that subsequent releases will be in compliance with the above limits.

3.4.3 SURVEILLANCE REQUIREMENTS:

Cumulative dose contributions for the current calendar quarter and current calendar year for iodine-131, tritium, and radionuclides in particulate form with half lives greater than 8 days shall be determined in accordance with the methodology and parameters in the ODCM at least once per month.

2.4.4 GASEOUS RADWASTE TREATMENT SYSTEM

CONTROL:

In accordance with Appendix A Technical Specification 6.8.4.a.6, the ~~The~~ appropriate GASEOUS RADWASTE TREATMENT SYSTEM and the appropriate VENTILATION EXHAUST TREATMENT SYSTEM shall be used to reduce radioactive materials in gaseous waste prior to their discharge when the projected gaseous effluent air doses due to gaseous effluent releases, from each reactor unit, to areas at and beyond the SITE BOUNDARY would exceed 0.2 mrad for gamma radiation and 0.4 mrad for beta radiation in a 31 day period. The VENTILATION EXHAUST TREATMENT SYSTEM shall be used to reduce radioactive materials in gaseous waste prior to their discharge when the projected doses due to gaseous effluent releases, from each reactor unit, to areas at and beyond the SITE BOUNDARY would exceed 0.3 mrem to any organ **of a MEMBER OF THE PUBLIC** in a 31 day period.

APPLICABILITY: ~~Applies at~~ **At all times** ~~to the operation of the gaseous radwaste treatment system~~.

~~SPECIFICATION~~ **ACTION**:

With gaseous waste being discharged without treatment and in excess of the above limits, in lieu of a Licensee Event Report, prepare and submit to the Commission within 30 days, pursuant to **Appendix A Technical** Specification **6.9.2** ~~5.3.2~~, a Special Report that includes the following information:

1. Explanation of why gaseous radwaste was being discharged without treatment, identification of any inoperable equipment or subsystems, and the reason for the inoperability,

2. Action(s) taken to restore the inoperable equipment to OPERABLE status,

   and

3. Summary description of action(s) taken to prevent a recurrence.

3.4.4 SURVEILLANCE REQUIREMENTS:

Doses due to gaseous releases from each reactor unit to areas at and beyond the SITE BOUNDARY shall be projected at least once per month in accordance with the methodology and parameters in the ODCM **when the GASEOUS RADWASTE TREATMENT SYSTEMS are not being fully utilized.**

2.5/3.5 SOLID RADIOACTIVE WASTE CONTROLS AND SURVEILLANCE REQUIREMENTS:

These sections are contained in the PCP.

2.6 TOTAL DOSE

CONTROL:

In accordance with Appendix A Technical Specification 6.8.4.a.10, limit ~~limit~~ the annual (calendar year) dose or dose commitment to any MEMBER OF THE PUBLIC due to releases of radioactivity and to **direct** radiation from uranium fuel cycle sources to less than or equal to 25 mrems to the total body or any organ, except the thyroid, which shall be limited to less than or equal to 75 mrems.

APPLICABILITY: ~~Applies at~~ **At all times** ~~to the annual dose or dose commitment from releases of radioactivity and to radiation from uranium fuel cycle sources~~.

~~SPECIFICATION~~ **ACTION**:

A. With calculated doses from the release of radioactive materials in liquid or gaseous effluents exceeding twice the limits of **Control** ~~Specification~~ 2.3.2.A, 2.4.2.A or 2.4.3.A, calculations should be made, including direct radiation contributions from the reactor units and from outside storage tanks, to determine whether the above limits ~~in the Objective of Specification 2.6~~ have been exceeded.

B. If such is the case, in lieu of a Licensee Event Report, prepare and submit to the Commission within 30 days, pursuant to **Appendix A Technical** Specification **6.9.2** ~~5.3.2~~, a Special Report that defines the corrective action to be taken to reduce subsequent releases to prevent recurrence of exceeding the above limits and includes the schedule for achieving conformance with the above limits. This Special Report, as defined in 10 CFR Part **20.2203(a)(4)** ~~20.405c~~, shall include an analysis that estimates the radiation exposure (dose) to a MEMBER OF THE PUBLIC from uranium fuel cycle sources, including all effluent pathways and direct radiation, for the calendar year that includes the release(s) covered by this report. It shall also describe levels of radiation and concentrations of radioactive material involved, **and** the cause of the exposure levels or concentrations. If the estimated dose(s) exceeds the above limits and if the release condition resulting in violation of 40 CFR Part 190 has not already been corrected, the Special Report shall include a request for a variance in accordance with the provisions of 40 CFR Part 190. Submittal of the report **within 30 days** is considered a timely request, and a variance is granted until staff action on the request is complete.

3.6 SURVEILLANCE REQUIREMENTS:

A. Cumulative dose contributions from liquid and gaseous effluents shall be determined in accordance with **Surveillance Requirements** ~~Specifications~~ 3.3.2, 3.4.2, 3.4.3 and in accordance with the methodology and parameters in the ODCM.

B. Cumulative dose contributions from direct radiation from the reactor units and from radwaste storage tanks shall be determined in accordance with the methodology and parameters in the ODCM. This requirement is applicable only under conditions set forth in **Control** ~~Specification~~ 2.6.

2.7 RADIOLOGICAL ENVIRONMENTAL MONITORING PROGRAM

CONTROL:

In accordance with Appendix A Technical Specification 6.8.4.b.1, the Radiological Environmental Monitoring Program shall be conducted as specified in Table 2.7-1.

APPLICABILITY: ~~Applies at~~ **At all times** ~~to the performance of the radiological environmental monitoring program~~.

~~SPECIFICATION~~ **ACTION**:

A. With the Radiological Environmental Monitoring Program not being conducted as specified in Table 2.7-1, in lieu of a Licensee Event Report, prepare and submit to the Commission, in the Annual Radiological Environmental Operating Report required by **Reporting Requirement 5.2** ~~Specification 5.3.2~~, a description of the reasons for not conducting the program as required and the plans for preventing a recurrence.

B. With the level of radioactivity as the result of plant effluents in an environmental sampling medium at a specified location exceeding the reporting levels of Table 2.7-2 when averaged over any calendar quarter, in lieu of a Licensee Event Report, prepare and submit~~,~~ to the Commission within 30 days, pursuant to **Appendix A Technical** Specification **6.9.2** ~~5.3.2~~, a Special Report that identifies the cause(s) for exceeding the limit(s) and defines the corrective actions to be taken to reduce radioactive effluents so that the potential annual dose to A MEMBER OF THE PUBLIC is less than the calendar year limits of **Controls** ~~Specifications~~ 2.3.2, 2.4.2, and 2.4.3. When more than one of the radionuclides in Table 2.7-2 are detected in the sampling medium, this report shall be submitted if:

$$\frac{\text{concentration (1)}}{\text{reporting level (1)}} + \frac{\text{concentration (2)}}{\text{reporting level (2)}} + \ldots \geq 1.0$$

When radionuclides other than those in Table 2.7-2 are detected and are the result of plant effluents, this report shall be submitted if the potential annual dose to A MEMBER OF THE PUBLIC is equal to or greater than the calendar year limits of **Controls** ~~Specifications~~ 2.3.2, 2.4.2, and 2.4.3. This report is not required if the measured level of radioactivity was not the result of plant effluents; however, in such an event, the condition shall be reported and described in the Annual Radiological Environmental Operating Report.

C. With milk or fresh leafy vegetable samples unavailable from one or more of the sample locations required by Table 2.7-1, identify locations for obtaining replacement samples and add them to the Radiological Environmental Monitoring Program within 30 days. The specific locations from which samples were unavailable may then be deleted from the monitoring program. In lieu of a Licensee Event Report and pursuant to **Reporting Requirement 5.1** ~~Specification 5.3.3.1~~, identify the cause of the unavailability of samples and identify the new location(s) for obtaining replacement samples in the next **Annual** ~~Semiannual~~ Radioactive Effluent Release Report and also include in the report a revised figure(s) and table for the ODCM reflecting the new location(s).

3.7 SURVEILLANCE REQUIREMENTS:

The radiological environmental monitoring samples shall be collected pursuant to Table 2.7-1 from the specific locations given in the table and figure(s) in the ODCM and the detection capabilities required by Table 3.7-1.

TABLE 2.7-1

RADIOLOGICAL ENVIRONMENTAL MONITORING PROGRAM			
Exposure Pathway and/or Sample	Number of Representative Samples and Sample Locations[a]	Sampling and Collection Frequency	Type and Frequency of Analysis
1. Direct Radiation[b]	40 routine monitoring stations (DR1-DR40) with two or more dosimeters for measuring and recording integrated dose continuously placed as follows: an inner ring of stations, one in each meteorological sector in the general area of the site boundary (DR1-DR16) an outer ring of stations, one in each meteorological sector in the 6 to 8 km range from the site (DR17-DR32) the balance of the stations (DR33-DR40) to be placed in special interest areas and in one area to serve as a control station.	Quarterly	Gamma dose quarterly

TABLE 2.7-1 *(Continued)*

RADIOLOGICAL ENVIRONMENTAL MONITORING PROGRAM			
Exposure Pathway and/or Sample	Number of Representative Samples and Sample Locations[a]	Sampling and Collection Frequency	Type and Frequency of Analysis
2. Airborne Radioiodine and Particulates	Samples from 5 locations (A1-A5): 3 samples (A1-A3) from close to the 3 site boundary locations in different sectors, of the highest calculated annual average ground level D/Q. 1 sample (A4) from the vicinity of a community having the highest calculated annual average ground level D/Q. 1 sample (A5) from a control location as for example 15-30 km distant and in the least prevalent wind direction.	Continuous sampler operation with collection weekly, or more frequently if required by dust loading	Radioiodine Canister: I-131 analysis weekly. Particulate Sampler: Gross beta radioactivity analysis following filter change;[d] Gamma isotopic analysis[e] of composite (by location) quarterly
3. Waterborne			
a. Surface	1 sample upstream[f] (Wa1) 1 sample downstream (Wa2)	Composite sample over 1 month period[g]	Gamma isotopic analysis[e] monthly. Composite for tritium analysis quarterly.

TABLE 2.7-1 *(Continued)*

RADIOLOGICAL ENVIRONMENTAL MONITORING PROGRAM			
Exposure Pathway and/or Sample	Number of Representative Samples and Sample Locations[a]	Sampling and Collection Frequency	Type and Frequency of Analysis
3. Waterborne			
b. Drinking	1 sample (Wb1) of the nearest surface drinking supply	Grab monthly	Gross beta and gamma isotopic analysis monthly. Composite for tritium analysis quarterly.
c. Sediment from Shoreline	2 samples (Wc1-Wc2) 1 sample (Wc1) from downstream area with existing or potential recreational value. 1 control sample (Wc2) from an upstream area.	2 annually at least 90 days apart	Gamma isotopic analysis[e]
4. Ingestion			
a. Milk	Samples from milking animals in 3 locations (Ia1-Ia3) within 5 km distance having the highest dose potential. If there are none, then 1 sample from milking animals in each of 3 areas (Ia1-Ia3) between 5 to 8 km distant if available where doses are calculated to be greater than 1 mrem per yr[h]. 1 sample from milking animals at a control location (Ia4), 15-30 km distant and in the least prevalent wind direction.	Semimonthly when animals are on pasture; monthly at other times. Con-currently with indicator locations.	Gamma isotopic[e] and I-131 analysis semimonthly when animals are on pasture; monthly at other times.

TABLE 2.7-1 *(Continued)*

RADIOLOGICAL ENVIRONMENTAL MONITORING PROGRAM			
Exposure Pathway and/or Sample	Number of Representative Samples and Sample Locations[a]	Sampling and Collection Frequency	Type and Frequency of Analysis
4. Ingestion			
b. Fish and Invertebrates	2 samples (Ib1, Ib2) 1 sample (Ib1) of each of 2 species commercially and/or recreationally important species of fish or invertebrate in the vicinity of the discharge when available. 1 sample (Ib2) of each of 2 commercially and/ or recreationally important species (the same species as in Ib1 if available) from an area not influenced by plant discharge.	Sample in season, or semi-annually if they are not seasonal	Gamma isotopic analysis[e]
c. Food Products	Samples of 3 different kinds of broad leaf vegetation (edible or inedible) grown nearest each of two different offsite locations of highest predicted annual average ground level D/Q if milk sampling is not performed (Ic1-Ic2).	Monthly when available	Gamma isotopic[e] and I-131 analysis
	1 sample of each of the similar broad leaf vegetation grown 15-30 km distant in the least prevalent wind direction if milk sampling is not performed (Ic3).	Monthly when available	Gamma isotopic[e] and I-131 analysis

TABLE 2.7-1 *(Continued)*

TABLE NOTATION

[a]The code letters in parenthesis (e.g., DR1, A1, etc.) refer to sample locations as specified in the ODCM. Specific parameters of distance and direction sector from the centerline of one reactor, and additional description where pertinent, shall be provided for each and every sample location in Table 2.7-1 in a table and figure(s) in the ODCM. Refer to NUREG-0133, "Preparation of Radiological Effluent Technical Specifications for Nuclear Power Plant," October 1978, and to Radiological Assessment Branch Technical Position, Revision 1, November 1979. Deviations are permitted from the required sampling schedule if specimens are unobtainable due to hazardous conditions, seasonal unavailability, malfunction of automatic sampling equipment and other legitimate reasons. If specimens are unobtainable due to sampling equipment malfunction, every effort shall be made to complete corrective action prior to the end of the next sampling period. All deviations from the sampling schedule shall be documented in the Annual Radiological Environmental Operating Report pursuant to **Reporting Requirement 5.2** ~~Specification 5.3.3.2~~. It is recognized that, at times, it may not be possible or practicable to continue to obtain samples of the media of choice at the most desired location or time. In these instances suitable alternative media and locations may be chosen for the particular pathway in question and appropriate substitutions made within 30 days in the Radiological Environmental Monitoring Program. In lieu of a Licensee Event Report and pursuant to Reporting Requirement 5.1, identify the cause of the unavailability of samples for that pathway and identify the new location(s) for obtaining replacement samples in the next **Annual** ~~Semiannual~~ Radioactive Effluent Release Report and also include in the report a revised figure(s) and table for the ODCM reflecting the new location(s).

[b]One or more instruments, such as a pressurized ion chamber, for measuring and recording dose rate continuously may be used in place of, or in addition to, integrating dosimeters. For the purposes of this table, a thermoluminescent dosimeter (TLD) is considered to be one phosphor; two or more phosphors in a packet are considered as two or more dosimeters. Film badges shall not be used as dosimeters for measuring direct radiation.

[c]The purpose of this sample is to obtain background information. If it is not practical to establish control locations in accordance with the distance and wind direction criteria, other sites that provide valid background data may be substituted.

[d]Airborne particulate sample filters shall be analyzed for gross beta radioactivity 24 hours or more after sampling to allow for radon and thoron daughter decay. If gross beta activity in air particulate samples is greater than ten times the yearly mean, of the previous calendar year, of control samples, gamma isotopic analysis shall be performed on the individual samples.

TABLE 2.7-1 *(Continued)*

TABLE NOTATION

[e]Gamma isotopic analysis means the identification and quantification of gamma emitting radionuclides that may be attributable to the effluents from the facility.

[f]"Upstream" sample shall be taken near the intake structures as described in the ODCM. The "downstream sample" shall be taken from the mixing zone at the diffuser to the discharge canal.

[g]A composite sample is one in which the quantity (aliquot) of liquid sampled shall be collected at time intervals that are very short (e.g., hourly) relative to the compositing period (e.g., monthly) in order to assure obtaining a representative sample.

[h]The dose shall be calculated for the maximum organ and age group using the methodology and parameters in the ODCM.

TABLE 2.7-2

REPORTING LEVELS FOR RADIOACTIVITY CONCENTRATIONS IN ENVIRONMENTAL SAMPLES					
	Reporting Levels				
Analysis	Water (pCi/ℓ)	Airborne Particulate or Gases (pCi/m^3)	Fish (pCi/kg, wet)	Milk (pCi/ℓ)	Food Products (pCi/kg, wet)
H-3	20,000*				
Mn-54	1,000		30,000		
Fe-59	400		10,000		
Co-58	1,000		30,000		
Co-60	300		10,000		
Zn-65	300		20,000		
Zr-Nb-95	400				
I-131	2**	0.9		3	100
Cs-134	30	10	1,000	60	1,000
Cs-137	50	20	2,000	70	2,000
Ba-La-140	200			300	

* For drinking water samples. This is 40 CFR Part 141 value. If no drinking water pathway exists, a value of 30,000 pCi/ℓ may be used.

** If no drinking water pathway exists, a value of 20 pCi/ℓ may be used.

TABLE 3.7-1

DETECTION CAPABILITIES FOR ENVIRONMENTAL SAMPLE ANALYSIS[a]						
LOWER LIMIT OF DETECTION (LLD)[b,c]						
Analysis	Water (pCi/ℓ)	Airborne Particulate or Gases (pCi/m³)	Fish (pCi/kg, wet)	Milk (pCi/ℓ)	Food Products (pCi/kg, wet)	Sediment (pCi/kg, dry)
gross beta	4	0.01				
H-3	2,000*					
Mn-54	15		130			
Fe-59	30		260			
Co-58, 60	15		130			
Zn-65	30		260			
Zr-Nb-95	15					
I-131	1**	0.07		1	60	
Cs-134	15	0.05	130	15	60	150
Cs-137	18	0.06	150	18	80	180
Ba-La-140	15			15		

TABLE NOTATION

* If no drinking water pathway exists, a value of 3,000 pCi/ℓ may be used.

** If no drinking water pathway exists, a value of 15 pCi/ℓ may be used.

TABLE 3.7-1 (Continued)

[a]This list does not mean that only these nuclides are to be considered. Other peaks that are identifiable, together with those of the above nuclides, shall also be analyzed and reported in the Annual Radiological Environmental Operating Report pursuant to **Reporting Requirement 5.2** ~~Specification 5.3.2.2~~.

[b]Required detection capabilities for thermoluminescent dosimeters used for environmental measurements are given in Regulatory Guide 4.13.

[c]The LLD is defined, for purposes of these **Controls** ~~specifications~~ as the smallest concentration of radioactive material in a sample that will yield a net count, above system background, that will be detected with 95% probability with only 5% probability of falsely concluding that a blank observation represents a "real" signal. Equations used in the calculation of the LLD for a particular measurement system are presented in the ODCM.

It should be recognized that the LLD is defined as an a priori (before the fact) limit representing the capability of a measurement system and not as an a posteriori (after the fact) limit for a particular measurement. Analyses shall be performed in such a manner that the stated LLDs will be achieved under routine conditions. Occasionally background fluctuations, unavoidable small sample sizes, the presence of interfering nuclides, or other uncontrollable circumstances may render these LLDs unachievable. In such cases, the contributing factors shall be identified and described in the Annual Radiological Environmental Operating Report pursuant to **Reporting Requirement 5.2** ~~Specification 5.3.2.2~~.

2.8 LAND USE CENSUS

CONTROL:

In accordance with Appendix A Technical Specification 6.8.4.b.2, conduct a land use census which identifies within a distance of 8 km (5 miles) the location in each of the 16 meteorological sectors of the nearest milk animal, the nearest residence and the nearest garden of greater than $50m^2$ ($500\ ft^2$) producing broad leaf vegetation. Broad leaf vegetation sampling of at least three different kinds of vegetation may be performed at the SITE BOUNDARY in each of two different direction sectors with the highest predicted D/Qs in lieu of the garden census. **The Controls** ~~Specifications~~ for broad leaf vegetation sampling in Table 2.7-1.4c shall be followed, including analysis of control samples.

APPLICABILITY: ~~Applies at~~ **At all times** ~~to the land use census, which identifies the nearest milk animal, the nearest residence and the nearest garden.~~

~~SPECIFICATION~~ **ACTION**:

A. With a land use census identifying a location(s) that yields a calculated dose or dose commitment greater than the values currently being calculated in **Control** ~~Specification~~ 3.4.3, in lieu of a Licensee Event Report, identify the new location(s) in the next **Annual** ~~Semiannual~~ Radioactive Effluent Release Report, pursuant to **Reporting Requirement 5.1** ~~Specification 5.3.3.1~~.

B. With a land use census identifying a location(s) that yields a calculated dose or dose commitment (via the same exposure pathway) two times greater than at a location from which samples are currently being obtained in accordance with **Control** ~~Specification~~ 2.7, add the new location(s) to the **R**adiological **E**nvironmental **M**onitoring **P**rogram within 30 days. The sampling location(s), excluding the control station location, having the lowest calculated dose or dose commitment(s), via the same exposure pathway, may be deleted from this monitoring program after (October 31) of the year in which this land use census was conducted. In lieu of a Licensee Event Report and pursuant to **Reporting Requirement 5.1,** ~~Specification 5.3.3.1~~ **i**dentify the new location(s) in the next **Annual** ~~Semiannual~~ Radioactive Effluent Release Report and also include in the report a revised figure(s) and table for the ODCM reflecting the new location(s).

3.8 SURVEILLANCE REQUIREMENTS:

The land use census shall be conducted during the growing season at least once per calendar year using that information that will provide the best results, such as by a door-to-door survey, **aerial survey** or by consulting local agriculture authorities. The results of the land use census shall **be** ~~bs~~ included in the Annual Radiological Environmental Operating Report pursuant to **Reporting Requirement 5.2** ~~Specification 5.3.3.2~~.

2.9 INTERLABORATORY COMPARISON PROGRAM

CONTROL:

In accordance with Appendix A Technical Specification 6.8.4.b.3, perform ~~Perform~~ analyses on radioactive materials supplied as part of an Interlaboratory Comparison Program that has been approved by the Commission.

APPLICABILITY: **At all times.** ~~Applies to the performance of the environmental Interlaboratory Comparison Program.~~

~~SPECIFICATION~~ **ACTION**:

With analyses not being performed as required above, report the corrective actions taken to prevent a recurrence to the Commission in the Annual Radiological Environmental Operating Report pursuant to **Reporting Requirement 5.2** ~~Specification 5.3.3.2~~.

3.9 SURVEILLANCE REQUIREMENTS:

A summary of the results obtained as part of the required Interlaboratory Comparison Program shall be included in the Annual Radiological Environmental Operation Report pursuant to **Reporting Requirement 5.2** ~~Specification 5.3.3.2~~.

4.0 BASES

RADIOACTIVE LIQUID EFFLUENT MONITORING INSTRUMENTATION (2/3.1)

The radioactive liquid effluent instrumentation is provided to monitor and control, as applicable, the releases of radioactive materials in liquid effluents during actual or potential releases of liquid effluents. The alarm/trip setpoints for these instruments shall be calculated and adjusted in accordance with the methodology and parameters in the ODCM to ensure that the alarm/trip will occur prior to exceeding **10 times the EFFLUENT CONCENTRATION values specified in Appendix B, Table 2, Column 2 to** ~~of~~ 10 CFR ~~Part~~ 20. The OPERABILITY and use of this instrumentation is consistent with the requirements of General Design Criteria 60, 63 and 64 of Appendix A to 10 CFR Part 50. The purpose of tank level indicating devices is to assure the detection and control of leaks that if not controlled could potentially result in the transport of radioactive materials to UNRESTRICTED AREAS.

RADIOACTIVE GASEOUS EFFLUENT MONITORING INSTRUMENTATION (2/3.2)

The radioactive gaseous effluent instrumentation is provided to monitor and control, as applicable, the releases of radioactive materials in gaseous effluents during actual or potential releases of gaseous effluents. The alarm/trip setpoints for these instruments shall be calculated and adjusted in accordance with the methodology and parameters in the ODCM to ensure that the alarm/trip will occur prior to exceeding the limits of 10 CFR Part 20. ~~This instrumentation also includes provisions for monitoring (and controlling)the concentrations of potentially explosive gas mixtures in the waste gas holdup system.~~ The OPERABILITY and use of this instrumentation is consistent with the requirements of General Design Criteria 60, 63 and 64 of Appendix A to 10 CFR Part 50.

LIQUID EFFLUENTS CONCENTRATION (2/3.3.1)

This Control is ~~These Specifications are~~ provided to ensure that the concentration of radioactive materials~~,~~ released in liquid waste effluents to UNRESTRICTED AREAS will be less than **10 times the EFFLUENT CONCENTRATION values specified in Appendix B, Table 2, Column 2 to 10 CFR 20** ~~the concentration levels specified in 10 CFR Part 20, Appendix B, Table II, Column 2~~. **The Control provides operational flexibility for releasing liquid effluents in concentrations to follow the Section II.A and II.C design objectives of Appendix I to 10 CFR Part 50.** This limitation provides **reasonable** ~~additional~~ assurance that the levels of radioactive materials in bodies of water in UNRESTRICTED AREAS will result in exposures within (1) the Section II.A design objectives of Appendix I, 10 CFR Part 50, to a MEMBER OF THE PUBLIC and (2) the **restrictions authorized by 10 CFR Part 20.1301(e)** ~~limits of 10 CFR Part 20.106(e) to the population~~. The concentration limit for the dissolved or entrained noble gases is based upon the assumption that Xe-135 is the controlling radio**nuclide** ~~isotope~~ and its **EFFLUENT CONCENTRATION** ~~MPC~~ in air (submersion) was converted to an equivalent concentration in water ~~using the methods described in International Commission on Radiological Protection (ICRP) Publication 2~~. **This control does not affect the requirement to comply with the annual limitations of 10 CFR Part 20.1301(a).**

This **Control** ~~specification~~ applies to the release of radioactive materials in liquid effluents from all units at the site.

The required detection capabilities for radioactive materials in liquid waste samples are tabulated in terms of the lower limits of detection (LLDs). Detailed discussion of the LLD and other detection limits can be found in Currie, L.A., "Lower Limit of Detection: Definition and Elaboration of a Proposed Position for Radiological Effluent and Environmental Measurements," NUREG/CR-4007 (September 1984), and in the HASL Procedures Manual, HASL-300 (revised annually).

DOSE FROM LIQUID EFFLUENTS (2/3.3.2)

This Control is ~~These specifications are~~ provided to implement the requirements of Sections II.A, III.A and IV.A of Appendix I, 10 CFR Part 50. The **Control statement** ~~Limiting Condition for Operation~~ implements the guides set forth in Section II.A of Appendix I. The Action statements provide the required operating flexibility and at the same time implement the guides set forth in Section IV.A of Appendix I to assure that the releases of radioactive material in liquid effluents will be kept "as low as is reasonably achievable." Also, for fresh water sites with drinking water supplies that can be potentially affected by plant operations, there is reasonable assurance that the operation of the facility will not result in radionuclide concentrations in the finished drinking water that are in excess of the requirements of 40 CFR Part 141. The dose calculation methodology and parameters in the ODCM implement the requirements in Section III.A of Appendix I that conformance with the guides of Appendix I be shown by calculational procedures based on models and data, such that the actual exposure of a MEMBER OF THE PUBLIC through appropriate pathways is unlikely to be substantially underestimated. The equations specified in the ODCM for calculating the doses due to the actual release rates of radioactive materials in liquid effluents are consistent with the methodology provided in Regulatory Guide 1.109, "Calculation of Annual Doses to Man from Routine Releases of Reactor Effluents for the purpose of Evaluating Compliance with 10 CFR Part 50, Appendix I," Revision 1, October 1977 and Regulatory Guide 1.113, "Estimating Aquatic Dispersion of Effluents from Accidental and Routine Reactor Releases for the Purpose of Implementing Appendix I," April 1977.

This **Control** ~~specification~~ applies to the release of liquid effluents from each reactor at the site. For units with shared radwaste treatment systems, the liquid effluents from the shared system are proportioned among the units sharing that system.

LIQUID RADWASTE TREATMENT SYSTEM (2/3.3.3)

The requirement that the appropriate portions of this system be used, when specified, provides assurance that the releases of radioactive materials in liquid effluents will be kept "as low as is reasonably achievable". This **Control** ~~specification~~ implements the requirements of 10 CFR Part 50.36a, General Design Criterion 60 of Appendix A to 10 CFR Part 50 and the design objective given in Section II.D of Appendix I to 10 CFR part 50. The specified limits governing the use of appropriate portions of the liquid radwaste treatment system were specified as a suitable fraction of the dose design objectives set forth in Section II.A of Appendix I, 10 CFR Part 50, for liquid effluents.

This **Control** ~~specification~~ applies to the release of liquid effluents from each reactor at the site. For units with shared radwaste treatment systems, the liquid effluents from the shared system are proportioned among the units sharing that system.

GASEOUS EFFLUENTS DOSE RATE (2/3.4.1)

This Control provides reasonable assurance that radioactive material discharged in gaseous effluents will not result in the exposure of a MEMBER OF THE PUBLIC in an UNRESTRICTED AREA, either at or beyond the SITE BOUNDARY in excess of the design objectives of Appendix I to 10 CFR Part 50. This Control is provided to ensure that gaseous effluents from all units on the site will be appropriately controlled. It provides operational flexibility for releasing gaseous effluents to satisfy the Section II.A and II.C design objectives of Appendix I to 10 CFR Part 50. ~~These specification are provided to ensure that the dose at any time at and beyond the SITE BOUNDARY from gaseous effluents from all units on the site will be within the annual dose limits of 10 CFR Part 20. The annual dose limits are the doses associated with the concentrations of 10 CFR Part 20, Appendix B, Table II, Column 1. These limits provide reasonable assurance that radioactive material discharge in gaseous effluents will not result in the exposure of a MEMBER OF THE PUBLIC, either within or outside the SITE BOUNDARY, to annual average concentrations exceeding the limits specified in Appendix B, Table II of 10 CFR Part 20 (10 CFR Part 20.106(b).~~ For MEMBERS OF THE PUBLIC who may at times be within the SITE BOUNDARY, the occupancy of that MEMBER OF THE PUBLIC will usually be sufficiently low to compensate for **the reduced atmospheric dispersion of gaseous effluents relative to that** ~~any increase in the atmospheric diffusion factor above that~~ for the SITE BOUNDARY. Examples of calculations for such MEMBER OF THE PUBLIC, with the appropriate occupancy factors, shall be given in the ODCM. The specified release rate limits restrict, at all times, the corresponding ~~gamma and beta~~ dose rates above background to a MEMBER OF THE PUBLIC at or beyond the SITE BOUNDARY to less than or equal to 500 mrem~~s~~/year to the total body or to less than or equal to 3000 mrem~~s~~/year to the skin. These release rate limits also restrict, at all times, the corresponding thyroid dose rate above background to a child via the inhalation pathway to less than or equal to 1500 mrem~~s~~/year. **This Control does not affect the requirement to comply with the annual limitations of 10 CFR 20.1301(a).**

This **Control** ~~specification~~ applies to the release of gaseous effluents from all units at the site.

DOSE FROM NOBLE GASES (2/3.4.2)

This Control is ~~These specifications are~~ provided to implement the requirements of Sections II.B, III.A and IV.A of Appendix I, 10 CFR Part 50. The **Control statements** ~~Limiting Condition for Operation~~ implement~~s~~ the guides set forth in Section II.B of Appendix I. The Action statements provide the required operating flexibility and at the same time implement the guides set forth in Section IV.A of Appendix I to assure that the releases of radioactive material in gaseous effluents will be kept "as low as is reasonably achievable." The Surveillance Requirements implement the requirements in Section III.A of Appendix I that conformance with the guides of Appendix I be shown by calculational procedures based on models and data such that the actual exposure of a MEMBER OF THE PUBLIC through appropriate pathways is unlikely to be substantially underestimated.

The dose calculation methodology and parameters established in the ODCM for calculating the doses due to the actual release rates of radioactive noble gases in gaseous effluents are consistent with the methodology provided in Regulatory Guide 1.109, "Calculation of Annual Doses to Man from Routine Releases of Reactor Effluents for the Purpose of Evaluating Compliance with 10 CFR Part 50, Appendix I," Revision 1, October 1977 and Regulatory Guide 1.111, "Methods for Estimating Atmospheric Transport and Dispersion of Gaseous Effluents in Routine Releases from Light-Water Cooled Reactors," Revision 1, July 1977. The ODCM equations provided for determining the air doses at and beyond the SITE BOUNDARY are based upon the historical average atmospheric conditions.

This Control applies ~~These specification apply~~ to the release of gaseous effluents from each reactor at the site. For units with shared radwaste treatment systems, the gaseous effluents from the shared system are proportioned among the units sharing that system.

DOSE FROM IODINE-131, TRITIUM, AND RADIONUCLIDES IN PARTICULATE FORM(2/3.4.3)

This Control is ~~These specifications are~~ provided to implement the requirements of Sections II.C, III.A and IV.A of Appendix I, 10 CFR Part 50. The **Controls** ~~Limiting Conditions for Operation~~ are the guides set forth in Section II.C of Appendix I. The **Action** ~~limiting condition for operation~~ statements provide the required operating flexibility and at the same time implement the guides set forth in Section IV.A of Appendix I to assure that the releases of radioactive materials in gaseous effluents will be kept "as low as is reasonably achievable." The ODCM calculational methods specified in the Surveillance Requirements implement the requirements in Section **III.A** ~~II.A~~ of Appendix I that conformance with the guides of Appendix I be shown by calculational procedures based on models and data, such that the actual exposure of a MEMBER OF THE PUBLIC through appropriate pathways is unlikely to be substantially underestimated.

The ODCM calculational methodology and parameters for calculating the doses due to the actual release rates of the subject materials are consistent with the methodology provided in Regulatory Guide 1.109, "Calculation of Annual Doses to Man from Routine Releases of Reactor Effluents for the Purpose of Evaluating Compliance with 10 CFR Part 50, Appendix I," Revision 1, October 1977 and Regulatory Guide 1.111, "Methods for Estimating Atmospheric Transport and Dispersion of Gaseous Effluents in Routine Releases from Light-Water-Cooled Reactors," Revision 1, July 1977. These equations also provide for determining the actual doses based upon the historical average atmospheric conditions. The release rate **Controls** ~~specifications~~ for iodine-131, tritium, and radionuclides in particulate form with half lives greater than 8 days are dependent upon the existing radionuclide pathways to man, in the areas at and beyond the SITE BOUNDARY. The pathways that were examined in the development of these calculations were: 1) individual inhalation of airborne radionuclides, 2) deposition of radionuclides onto green leafy vegetation with subsequent consumption by man, 3) deposition onto grassy areas where milk animals and meat producing animals graze with consumption of the milk and meat by man, and 4) deposition on the ground with subsequent exposure of man.

This **Control** ~~specification~~ applies to the release of gaseous effluents from each reactor at the site. For units with shared radwaste treatment systems, the gaseous effluents from the shared systems are proportioned among the units sharing that system.

GASEOUS RADWASTE TREATMENT SYSTEM (2/3.4.4)

The requirement that the appropriate portions of these systems be used, when specified, provides reasonable assurance that the release of radioactive materials in gaseous effluents will be kept "as low as is reasonably achievable." This **Control** ~~specification~~ implements the requirements of 10 CFR **Part** 50.36a, General Design Criterion 60 of Appendix A to 10 CFR Part 50, and the design objectives given in Section II.D of Appendix I to 10 CFR Part 50.

The specified limits governing the use of appropriate portions of the systems were specified as a suitable fraction of the dose design objectives set forth in Sections II.B and II.C of Appendix I, 10 CFR Part 50, for gaseous effluents.

This Control applies ~~These specifications apply~~ to the release of gaseous effluents from each reactor at the site. For units with shared radwaste treatment systems, the gaseous effluents from the shared systems are proportioned among the units sharing that system.

TOTAL DOSE (2/3.6)

This **Control** ~~specification~~ is provided to meet the dose limitations of 40 CFR Part 190 that have been incorporated into 10 CFR Part **20.1301(d)** ~~20 by 46 FR 18525~~. The **Control** ~~Specification~~ requires the preparation and submittal of a Special Report whenever the calculated doses **due to releases of radioactivity and to radiation from uranium fuel cycle sources** ~~from plant generated radioactive effluents and direct radiation~~ exceed 25 mrems to the total body or any organ, except the thyroid, which shall be limited to less than or equal to 75 mrems.

For sites containing up to 4 reactors, it is highly unlikely that the resultant dose to a MEMBER OF THE PUBLIC will exceed the dose limits of 40 CFR Part 190 if the individual reactors remain within twice the dose design objectives of Appendix I, and if direct radiation doses from the reactor units and outside storage tanks are kept small. The Special Report will describe a course of action that should result in the limitation of the annual dose to a MEMBER OF THE PUBLIC to within the 40 CFR Part 190 limits. For the purposes of the Special Report, it may be assumed that the dose commitment to the MEMBER OF THE PUBLIC from other uranium fuel cycle sources is negligible, with the exception that dose contributions from other nuclear fuel cycle facilities at the same site or within a radius of 8 km must be considered. If the dose to any MEMBER OF THE PUBLIC is estimated to exceed the requirements of 40 CFR Part 190, **submittal of** the Special Report **within 30 days** with a request for a variance (provided the release conditions resulting in violation of 40 CFR Part 190 have not already been corrected), in accordance with the provisions of 40 CFR Part 190.11 and 10 CFR Part **20.2203(a)(4)** ~~20.405c~~, is considered to be a timely request and fulfills the requirements of 40 CFR Part 190 until NRC staff action is completed. The variance only relates to the limits of 40 CFR Part 190, and does not apply in any way to the other requirements for dose limitation of 10 CFR ~~Part~~ **20**, as addressed in **Controls** ~~Specifications~~ 2.3.1 and 2.4.1. An individual is not considered a MEMBER OF THE PUBLIC during any period in which he/she is engaged in carrying out any operation that is part of the nuclear fuel cycle.

Demonstration of compliance with the limits of 40 CFR Part 190 or with the design objectives of Appendix I to 10 CFR Part 50 will be considered to demonstrate compliance with the 0.1 rem limit of 10 CFR Part 20.1301.

RADIOLOGICAL ENVIRONMENTAL MONITORING PROGRAM (2/3.7)

The **R**adiological **E**nvironmental **M**onitoring **P**rogram required by **this Control** ~~these specifications~~ provide**s** representative measurements of radiation and of radioactive materials in those exposure pathways and for those radionuclides that lead to the highest potential radiation exposures of MEMBERS OF THE PUBLIC resulting from the station operation.

This monitoring program implements Section IV.B.2 **of** ~~or~~ Appendix I to 10 CFR Part 50 and thereby supplements the **R**adiological **E**ffluent **M**onitoring **P**rogram by verifying that the measurable concentrations of radioactive materials and levels of radiation are not higher than expected on the basis of the effluent measurements and the modeling of the environmental exposure pathways. Program changes may be initiated based on operational experience.

The required detection capabilities for environmental sample analyses are tabulated in terms of the lower limits of detection (LLDs). The LLDs required by Table 3.7-1 are considered optimum for routine environmental measurements in industrial laboratories. It should be recognized that the LLD is defined as an a priori (before the fact) limit representing the capability of a measurement system and not as an a posteriori (after the fact) limit for a particular measurement.

LAND USE CENSUS (2/3.8)

This Control is ~~These specification are~~ provided to ensure that changes in the use of areas at and beyond the SITE BOUNDARY are identified and that modifications to the **R**adiological **E**nvironmental **M**onitoring **P**rogram are made if required by the results of this census. The best information from the door-to-door survey, from aerial survey or from consulting with local agricultural authorities shall be used. This census satisfies the requirements of Section IV.B.3 of Appendix I to 10 CFR Part 50. Restricting the census to gardens of greater than 50 m^2 provides assurance that significant exposure pathways via leafy vegetables will be identified and monitored since a garden of this size is the minimum required to produce the quantity (26 kg/year) of leafy vegetables assumed in Regulatory Guide 1.109 for consumption by a child. To determine this minimum garden size, the following assumptions were made: 1) 20% of the garden was used for growing broad leaf vegetation (i.e., similar to lettuce and cabbage), and 2) a vegetation yield of 2 kg/m^2.

INTERLABORATORY COMPARISON PROGRAM (2/3.9)

The requirement for participation in an approved Interlaboratory Comparison Program is provided to ensure that independent checks on the precision and accuracy of the measurements of radioactive material in environmental sample matrices are performed as part of the quality assurance program for environmental monitoring in order to demonstrate that the results are reasonably valid for the purposes of Section IV.B.2 of Appendix I to 10 CFR Part 50.

5.0 REPORTING REQUIREMENTS

5.1 ~~SEMI~~ANNUAL RADIOACTIVE EFFLUENT RELEASE REPORT

A ~~Routine~~ Radioactive Effluent Release Report~~s~~ covering the operation of the unit during the previous **year** ~~6 months of operation~~ shall be submitted **prior to May 1** ~~within 60 days after January 1 and July 1~~ of each year. A single submittal may be made for a multiple unit station. The submittal should combine those sections that are common to all units at the station; however, for units with separate radwaste systems, the submittal shall specify the releases of radioactive material from each unit.

The **Annual** Radioactive Effluent Release Report shall include **the following information:**

- **A** summary of the quantities of radioactive liquid and gaseous effluents and solid waste released from the unit as outlined in Regulatory Guide 1.21, "Measuring, Evaluating, and Reporting Radioactivity in Solid Wastes and Releases of Radioactive Materials in Liquid and Gaseous Effluents from Light-Water-Cooled Nuclear Power Plants," Revision 1, June 1974, with data summarized on a quarterly basis following the format of Appendix B thereof or as modified in the **Radiological Environmental Controls (REC)** ~~R.E.T.S~~.

  ~~The radioactive Effluent Release Report to be submitted within 60 days after January 1 of each year shall include an annual summary of hourly meteorological data collected over the previous year. This annual summary may be either in the form of an hour-by-hour listing on magnetic tape of wind speed, wind direction, atmospheric stability, and precipitation (if measured), or in the form of joint frequency distributions of wind speed, wind direction, and atmospheric stability.** This same report shall include an assessment of the radiation doses due to the radioactive liquid and gaseous effluents released from the unit or station during the previous calendar year. This same report shall also include an assessment of the radiation doses from radioactive liquid and gaseous effluents to MEMBERS OF THE PUBLIC due to their activities inside the SITE BOUNDARY during the report period. All assumptions used in making these assessments, i.e., specific activity, exposure time and location, shall be included in these reports. The meteorological conditions concurrent with the time of release of radioactive materials in gaseous effluents, as determined by sampling frequency and measurement, shall be used for determining the gaseous pathway doses. (For ORs: approximate and conservative approximate methods are acceptable.) The assessment of radiation doses shall be performed in accordance with the methodology and parameters in the OFFSITE DOSE CALCULATION MANUAL (ODCM).~~

  ~~The Radioactive Effluent Release Report to be submitted 60 days after January 1 of each year shall also include an assessment of radiation doses to the likely most exposed MEMBER OF THE PUBLIC from reactor releases and other nearby uranium fuel cycle sources, when required by Sections 2.6 and 3.6 including doses from primary effluent pathways and direct radiation, for the previous calendar year to show conformance with 40 CFR Part 190, Environmental Radiation Protection Standards for Nuclear Power Operation.~~

  ~~Acceptable methods for calculating the dose contribution from liquid and gaseous effluents are given in Regulatory Guide 1.109 Rev. 1, October, 1977.~~

- **For solid wastes,** ~~The Radioactive Effluent Release Reports shall include~~ the following information for each class of solid waste (as defined by 10 CFR Part 61) shipped offsite during the report period **will be presented in tabular form similar to that of Table 3 of Regulatory Guide 1.21.**

  a. Container volume,

  b. Total curie quantity (specify whether determined by measurement or estimate),

  c. Principal radionuclides (specify whether determined by measurement or estimate,

  d. Source of waste and processing employed (e.g., dewatered spent resin, compacted dry waste, evaporator bottoms),

  e. Type of container (e.g., LSA, Type A, Type B, Large Quantity), and

  f. Solidification agent or absorbent (e.g., cement, urea formaldehyde).

  ~~This information will be presented in tabular form similar to that of Table 3 of Reg. Guide 1.21.~~

- ~~The radioactive Effluent Release Report to be submitted within 60 days after January 1 of each year shall include an~~ **An** annual summary of hourly meteorological data collected over the previous year. This annual summary may be either in the form of an hour-by-hour listing on magnetic tape of wind speed, wind direction, atmospheric stability, and precipitation (if measured), or in the form of joint frequency distributions of wind speed, wind direction, and atmospheric stability. **In lieu of submission with the Radioactive Effluent Release Report, the licensee has the option of retaining this summary of required meteorological data on site in a file that shall be provided to the NRC upon request.**

- ~~This same report shall include~~ **An** assessment of the radiation doses due to the radioactive liquid and gaseous effluents released from the unit or station during the previous calendar year.

- ~~This same report shall also include~~ **An** assessment of the radiation doses from radioactive liquid and gaseous effluents to MEMBERS OF THE PUBLIC due to their activities inside the SITE BOUNDARY during the report period. All assumptions used in making these assessments, i.e., specific activity, exposure time and location, shall be included in **the** ~~these~~ reports.

  Approximate and conservative approximate methods for determining the meteorological conditions shall be used for determining gaseous pathway doses. The assessment of radiation doses shall be performed in accordance with the methodology and parameters in the OFFSITE DOSE CALCULATION MANUAL (ODCM).

- **An** assessment of radiation doses to the likely most exposed MEMBER OF THE PUBLIC from reactor releases and other nearby uranium fuel cycle sources, when required by Sections 2.6 and 3.6, including doses from primary effluent pathways and direct radiation, for the previous calendar year to show conformance with 40 CFR Part 190, "Environmental Radiation Protection Standards for Nuclear Power Operation."

  Acceptable methods for calculating the dose contribution from liquid and gaseous effluents are given in Regulatory Guide 1.109 Rev. 1, October, 1977.

- **A** list and description of unplanned releases from the site to UNRESTRICTED AREAS of radioactive materials in gaseous and liquid effluents made during the reporting period.

- **Pursuant to Controls 2.1 and 2.2, an explanation as to why the inoperability of liquid or gaseous effluent monitoring instrumentation was not corrected within the time specified.**

- **Pursuant to Controls 2.1 and 2.2, a discussion of all deviations from the provisions of these Controls.**

- **Pursuant to Control 2.7 and Table 2.7-1, Notation (a), identify the causes of the unavailability of samples for pathway analysis and identify the new locations for obtaining replacement samples. Include revised figure(s) and table for the ODCM reflecting the new locations.**

- **Pursuant to Table 3.3.1-1, Notation (c) and Table 3.4.1-1, Notation (b), a discussion of identifiable gamma peaks, including those of nuclides specified in Tables 3.3.1-1 and 3.4.1-1.**

- **Pursuant to Control 2.8, a** listing of new location(s) for dose calculations and/or environmental monitoring identified by the land use census ~~pursuant to specification 2.8~~. **Include revised figure(s) and table for the ODCM reflecting the new location(s).**

- **Pursuant to Appendix B Technical Specifications 1.2.1 and 1.3.2, a description of the events leading to liquid holdup tanks or gas storage tanks exceeding the Control limits.**

- **Pursuant to Appendix B Technical Specification 4.3.3, a discussion of the major changes to radioactive liquid, gaseous, and solid waste treatment systems.**

- **Pursuant to Appendix B Technical Specifications 4.5.2 and 4.6.2, any** changes made during the reporting period to the PROCESS CONTROL PROGRAM (PCP) and to the OFFSITE DOSE CALCULATION MANUAL (ODCM)**, respectively**.

5.2 ANNUAL RADIOLOGICAL ENVIRONMENTAL OPERATING REPORT

An annual ~~Routine~~ Radiological Environmental Operating Report~~s~~ covering the operation of the unit during the previous calendar year shall be submitted prior to May 1 of each year. **A single submittal may be made for a multiple unit station.**

The Annual Radiological Environmental Operating Report~~s~~ shall include:

- Summaries, interpretations, and an analysis of trends of the results of the **R**adiological **E**nvironmental **M**onitoring **P**rogram for the report period, including a comparison, as appropriate, with preoperational studies, with operational controls, and with previous environmental surveillance reports, and an assessment of the observed impacts of the plant operation on the environment. ~~The reports shall also include the results of the land use censuses required by specification 2.8.~~

- The results of analysis of all radiological environmental samples and of all environmental radiation measurements taken during the period pursuant to the locations specified in the **tables** ~~Table~~ and **f**igures in the ODCM, as well as summarized and tabulated results of these analyses and measurements in the format of the table in the Radiological Assessment Branch Technical Position, Revision 1, November 1979. In the event that some individual results are not available for inclusion with the report, the report shall be submitted noting and explaining the reasons for the missing results. The missing data shall be submitted as soon as possible in a supplementary report.

- A summary description of the **R**adiological **E**nvironmental **M**onitoring **P**rogram.

- At least two legible maps covering all sampling locations keyed to a table giving distances and directions from the centerline of one reactor. **One map shall cover stations near the site boundary and the second shall include the more distant stations.**

- **A discussion of the reasons for not conducting the Radiological Environmental Monitoring Program as specified by Control 2.7 and the plans for preventing recurrence.**

- **Pursuant to Control 2.7, a discussion of environmental sample measurements that exceed the reporting levels of Table 2.7-2 but are not the result of plant effluents.**

- **Pursuant to Table 2.7-1, Notation (a), a** discussion of all deviations from the sampling schedule of Table 2.7-1.

- **Pursuant to Table 3.7-1, Notation (c),** a discussion of all analyses **and a discussion of the contributing factors for cases** in which the LLD required by Table 3.7-1 was not achievable.

- **Pursuant to Table 3.7-1, Notation (a), a discussion of identifiable nuclide peaks, including those of nuclides specified in Table 3.7-1.**

- **Pursuant to Control 3.8,** the results of the land use census.

- **Pursuant to Control 2.9, the corrective actions taken to prevent a recurrence if the Interlaboratory Comparison Program is not being performed as required.**

- **Pursuant to Control 3.9,** the results of licensee participation in the Interlaboratory Comparison Program.

5.3 SPECIAL REPORTS

In lieu of a Licensee Event Report (LER), the following special reports must be generated within 30 days:

- Pursuant to Control 2.3.2, identify the cause(s) for exceeding the specified limits for dose or dose commitment to a MEMBER OF THE PUBLIC from the release of radioactive materials in liquid effluents to UNRESTRICTED AREAS. Define the corrective action(s) taken to reduce the releases and the proposed corrective action(s) to be taken to assure subsequent releases will be in compliance with limits. Include the results of radiological analyses of the drinking water source and the radiological impact on finished drinking water supplies with regard to the requirements of 40 CFR Part 141.

- Pursuant to Control 2.3.3, explain why liquid radwaste was discharged without treatment and identify any inoperable liquid radwaste treatment system equipment or subsystems and the reason for the inoperability. Include the action(s) taken to restore the inoperable equipment to OPERABLE status and a summary description of the action(s) taken to prevent a recurrence.

- Pursuant to Control 2.4.2, identify the cause(s) for exceeding the specified limit(s) for the air dose due to radioactive noble gases released in gaseous effluents. Define the corrective actions taken to reduce the releases and define the proposed corrective actions to be taken to assure subsequent releases will be in compliance with limits specified in the Control.

- Pursuant to Control 2.4.3, identify the cause(s) for exceeding the specified limits for the dose to a MEMBER OF THE PUBLIC from the release of iodine-131, tritium, and radionuclides in particulate form with half lives greater than 8 days in gaseous effluents. Define the corrective actions taken to reduce the releases and define the proposed corrective actions to be taken to assure subsequent releases will be in compliance with limits specified in the Control.

- Pursuant to Control 2.4.4, explain why gaseous radwaste was discharged without treatment and identify inoperable gaseous radwaste treatment system equipment or subsystems and the reason for the inoperability. Include the action(s) taken to restore the inoperable equipment to OPERABLE status and a summary description of the action(s) taken to prevent a recurrence.

- Pursuant to Control 2.6 and 10 CFR Part 20.2203(a)(4), define the corrective action to be taken to reduce subsequent releases to prevent recurrence of exceeding the specified total dose limits. Include a schedule for achieving conformance with the limits and describe the course of action that should result in the limitation of the annual dose to a MEMBER OF THE PUBLIC to within the 40 CFR Part 190 limits. Include an analysis that estimates the radiation exposure (dose) to a MEMBER OF THE PUBLIC from uranium fuel cycle sources, including all effluent pathways and direct radiation, for the calendar year that includes the releases covered by this report. Also describe the levels of radiation and the concentrations of radioactive material involved as well as the cause of the exposure levels or concentrations. Include a request, if required by the provisions of the Control, for a variance in accordance with the provisions of 40 CFR Part 190.

- Pursuant to Control 2.7, identify the cause(s) for exceeding the reporting levels of Table 2.7-2 and define the corrective actions to be taken to reduce radioactive effluents so that the potential annual dose to a MEMBER OF THE PUBLIC is less than the calendar year limits of Controls 2.3.2, 2.4.2, and 2.4.3. Report when more than one radionuclide in Table 2.7-2 is detected <u>and</u>

$$\frac{\text{Concentration (1)}}{\text{Reporting Level (1)}} + \frac{\text{Concentration (2)}}{\text{Reporting Level (2)}} + \ldots \geq 1.0$$

Report when radionuclides other than those in Table 2.7-2 are detected <u>and</u> are the result of plant effluents <u>and</u> the potential annual dose to a MEMBER OF THE PUBLIC is equal to or greater than the calendar year limits of Controls 2.3.2, 2.4.2, and 2.4.3.

1.0 INSTRUMENTATION AND SYSTEMS

1.1 Effluent Monitoring System Description

Effluent monitor information is provided in Table 1-1, including an indication of which monitors use effluent setpoints. Figures 2-1 and 3-1 show a schematic of the possible radioactive release points which monitor locations for gaseous and liquid pathways, respectively.

1.2 Setpoints

This section provides equations and methodology used for each alarm and trip setpoint on each effluent release point according to **Radiological Effluent Controls** ~~Specifications~~ 2.1 and 2.2.

1.2.1 Setpoints for Gaseous Effluent Monitors

Setpoints for gaseous monitors are based on the permissible discharge rate as calculated in Section 3 of the ODCM. The most restrictive setpoints (based on annual average dose limit) are used whenever practical. Higher release rates may be authorized with the proper concurrence, as delineated in Section 3.1.8. The methodology identified in Section 3, along with an isotopic mix described in Table 3.8, are used to generate the following noble gas discharge rates (normally utilized for alarm setpoints):

Permissible Discharge Rate (uCi/sec)

Basis of Limit		Iodine/Particulate*	Noble Gases
Annual Average	**	1.04E-2	3.08E+3
Quarterly Average	**	2.08E-2	6.15E+3
Instantaneous	***	1.20E+1	3.81E+4

* Half-lives greater than 8 days.

** These limits are not part of **Radiological Effluent Control** ~~Technical Specification~~ 2.4.1, but are included for information, as these limits are used for operational control of releases.

*** From **Radiological Effluent Control** ~~Technical Specification,~~ 2.4.1

1.2.1.1 The Plant Vent Wide Range Gas Monitor (R-27) reads and alarms directly in uCi/sec, hence, the alarm setpoints are set directly in uCi/sec.

1.2.1.2 If the monitor reads and alarms in uCi/cc, the alarm set point is calculated as follows:

$$S = D / [(F) * (4.72E+2)]$$

where: S = Alarm setpoint in uci/cc

D = Permissible discharge rate in uCi/sec

F = Vent duct flow in ft^3/min

4.72E+2 = conversion factor (28317 cc·min/ft^3·60sec)

1.2.1.3 If the monitor reads and alarms in cpm then the alarm setpoint is calculated as follows:

$$S = D / [(F) * (4.72E+2) * (CF)]$$

where: S, D, F, and 4.72E+2 are as defined above, and

CF = Calibration factor in uCi/cc per net cpm

1.2.1.4 Normally, maximum allowable limits are calculated using a standard nuclide mix. However, setpoints may be determined based on the actual mix, on a case by case basis. This method is usually performed when the instantaneous release rate is applied.

1.2.1.5 During normal operation, the Unit 3 main plant vent is the only significant release point (>99% total). If another release point becomes significant, its permissible release rate should be apportioned with the Plant Vent's to ensure the total discharge rate for all release points remains less than the maximum permissible discharge rate.

1.2.2 <u>Setpoints for Liquid Effluent Monitors</u>

1.2.2.1 Liquid Effluent Monitors have setpoints based on limiting the concentrations in the discharge canal to the levels listed in 10 CFR 20 Appendix B, Table 2 ~~II~~, Column 2.

(Insert Figure 1-1)

2.0 LIQUID EFFLUENTS

2.1 Liquid Effluent Releases - General Information

2.1.1 The surveillance and lower limit of detection requirements for liquid radioactive effluents are contained in Section 3.3.1 of the **Radiological Effluent Controls (RECS)** ~~Technical Specifications~~. Lower limit of detection calculations are listed in Appendix B.

2.1.2 A completed and properly authorized Liquid Radioactive Waste Permit should be issued prior to the release of any radioactive waste from an isolated tank to the discharge canal. A permit is required for each radioactive tank to be discharged.

2.1.3 All activity determinations for liquid radioactive effluents will be performed in such a manner as to be representative of the activity released to the river.

2.1.4 The radioactivity in liquid waste tanks shall be continuously monitored during release except as allowed by 3.1 Section 2.1 of **RECS** ~~RETS~~. If the flowmeter is inoperable, the flow shall be estimated every four hours by difference in tank level or by discharge pump curves.

2.1.5 Prior to discharge, the radioactive waste tank contents shall be recirculated for at least two tank volumes. After this recirculation, and prior to discharge, a sample shall be taken and analyzed for activity with a portion of the sample set aside for composite analysis. The measured activity shall be used for calculating allowable discharge rate and the alarm setpoint for the liquid waste discharge monitor.

2.1.6 Radioactive releases of steam generator blowdown during primary-secondary leaks when released to the river should be documented on Liquid Radioactive Waste Release Permits using data supplied by the Chemistry Technician.

2.1.7 Assurance that combined liquid releases from Units 2 and 3 do not exceed Section 2.3 requirement of the **RECS** ~~RETS~~ limits for the site are provided by administrative controls. These administrative controls are agreed to in the Memorandum of Understanding (#15) between Con Edison and the New York Power Authority concerning liquid discharge and the requirements of this document.

2.1.8 The dilution flow from Unit No. 3 should be used for calculating discharge canal concentrations during the discharge. However, by agreement with Con Edison's IP2NPP Watch Supervisor and the New York Power Authority's IP3NPP Watch Supervisor, one party can reduce or eliminate radioactive liquid waste discharge for a period of time to allow the other party to use the full site dilution flow, or a specified portion thereof, for a discharge when necessary. For time average dose calculations, allocation of dilution flow for the time period are apportioned between Unit 3 and Unit 2 per Memorandum of Understanding (#15).

2.1.9 Steam Generator Blowdown activity is determined by samples taken at least three times per week. This frequency is required by Table 4.1-2 Item 6 of Appendix A of the station's operating license. These "grab" samples of the steam generators are collected in a manner to be proportional to the rate of flow of individual steam generator to total steam generator blowdown. These samples are then analyzed for the various radionuclides at the frequencies specified in Table **3.3.1-1 of the RECS** ~~3.3-1B of the RETS~~. (Further flow proportional composites are made where appropriate.) (Ref: NUREG 0472, REV. 3, DRAFT 6, TABLE 4.11-1.)

2.1.10 The discharge canal flow rate is determined by the use of pump flow characteristics curves. The normal flow for condenser cooling pumps is 140,000 gpm when operating at maximum speed. During the cold weather months, the condenser cooling pumps are operating at reduced speed. This reduced flow is nominally 64,000 gpm (Ref: NUREG 0472, REV. 3, DRAFT 6, TABLE 3.3-12).

2.1.11 Radioactivity content in outdoor tanks is to be limited to less than 10 curies, excluding tritium and noble gas, as per section **1.2.1, Appendix B** ~~2.3.4~~ of the Technical Specifications. Compliance with this requirement is demonstrated by limiting the radioactive concentration in these tanks to the value which results in 10 curies when the tank is at full liquid capacity, except as modified below. The radioactive concentration limits for these tanks are:

RWST: $\frac{10 \text{ curies} \times 10^6 \ \mu\text{Ci/curie}}{358{,}500 \text{ gals} \times 3785 \text{ ml/gal}} = 7.3 \times 10^{-3} \ \mu\text{Ci/ml}$

PWST: $\frac{10 \text{ curies} \times 10^6 \ \mu\text{Ci/curie}}{165{,}000 \text{ gals} \times 3785 \text{ ml/gal}} = 1.6 \times 10^{-2} \ \mu\text{Ci/ml}$

31 & 32 MT:

$\frac{10 \text{ curies} \times 10^6 \ \mu\text{Ci/curie}}{11{,}750 \text{ gals} \times 3785 \text{ ml/gal}} = 2.2 \times 10^{-1} \ \mu\text{Ci/ml}$

Outside Temporary Tanks:

$\frac{10 \text{ curies} \times 10^6 \ \mu\text{Ci/curie}}{\text{Volume in gals} \times 3785 \text{ ml/gal}} = \mu\text{Ci/ml}$

The refueling water storage tank has the potential to be filled from the reactor cavity with liquid which exceeds the limits stated. Therefore, prior to filling the RWST from the reactor cavity after refueling operations, the reactor cavity (or residual heat removal system) must be sampled for radioactivity and action taken to ensure that the total activity in the tank does not exceed 10 curies.

Outside temporary tanks should not be filled with liquid which could exceed the concentration limit calculated. Therefore, prior to transfer to outside tanks, the source of liquid shall be sampled for radioactivity. If it exceeds the concentration limit calculated, action shall be taken to ensure that the total activity in the tank does not exceed 10 curies (Ref: NUREG 0472, REV. 3, DRAFT 6, TABLE 3.11.1.4).

2.1.12 There are no continuous composite samples for steam generator blowdown. The method of determining release concentrations is indicated below:

Individual blowdown flow rate to the river (by flowmeter or by flow curves) multiplied by sample blowdown concentration equals composite activity being released. In addition, R-19 monitors the composite steam generator blowdown released (Ref: NUREG 0472, REV. 3, DRAFT 6, TABLE 3.3-12).

2.1.13 The service water radioactivity monitor listed in Table 2.1-1 of the **RECS** ~~RETS~~ is defined as the process radiation monitors which monitor components discharging into or are cooled by the service water system. These process radiation monitors are:

R-16 A or B:	Fan Cooler and Motor Cooler unit service water return monitors
R-23:	Component cooling service water return
R-18:	Liquid release monitor (separate release point)
R-19:	Steam generator blowdown radioactivity monitor (separate release point)

If all monitors on the effected release path are taken out of service and the removal of that monitor from service is not specifically addressed in the **Radiological Environmental Controls** ~~Radiological Environmental Technical Specification~~, samples shall be taken every 12 hours or releases may not continue via this pathway. Samples may be taken on the affected monitored stream or on the service water system (Ref: NUREG 0472, REV. 3, DRAFT 6, TABLE 3.3-12).

2.1.14 Liquid effluent concentrations are limited to 10CFR20 limits~~, as calculated under 10CFR20.106a, which permits averaging of effluent concentrationover one year. This method is appropriate for batch liquid waste tanks since doses from this liquid pathway are the result of total curies released and are not greatly influenced by instantaneous concentrations~~. The total dose per quarter and per year must be within the limitations of 2.3.2 of the **RECS** ~~**RETS**~~ (Ref: NUREG 0472, REV. 3, DRAFT 6, TABLE 3.11.1.1).

2.1.15 There are no drinking water intakes within 3 miles of the site on the Hudson River (see Section 2.4.1 for further details) (Ref: NUREG 0472, REV. 3, DRAFT 6, TABLE 3.11.1.2).

2.1.16 A turbine hall drain system which would collect leakage of contaminated secondary plant waters during operation does not exist at IP3. The sumps which are present in the turbine hall five foot elevation receive drains from areas containing secondary plant components at sub-atmospheric pressures. These sumps would not meet the intent of the NUREG 0472.

The activity released to the environment via this pathway is negligible when steam generator blowdown activity is less than 3E-5 uCi/ml. Activity released via this pathway when steam generator activity exceeds 3E-5 uCi/ml is determined by the following method:

Turbine Hall Drain Effluent Activity	=	Feedwater Specific Activity	* (	Steam Plant Makeup Rate	-	S/G Blowdown rate to the River	)

(Ref: NUREG 0472, REV. 3, DRAFT 6, TABLE 3.3-12)

2.1.17 Carbon 14 is released at a rate of .07 curies per GW(e).yr with an average make up rate of 0.5 gal/min based upon studies performed by the New York State Department of Health. The estimate of Carbon 14 releases are included in the Radiological Impact on Man section of the Semi-annual Radioactive Effluent Release Report. These estimates are not included in dose calculations for routine releases.

2.1.18 The condensate polisher regenerant waste is routinely analyzed for radioactivity and is normally a non-radioactive release point. The monitoring program for this release point is consistent with the direction set forth in NRC IE Bulletin 80-10 "Contamination of Non-radioactive Systems and Resulting Potential for Unmonitored, Uncontrolled Release of Radioactivity to Environment". Should the system become radioactive, releases from this system will be in accordance with the requirements for batch waste release tanks listed in the **RECS** ~~**RETS**~~.

2.1.19 The liquid waste monitor tanks have an airborne release pathway. The original plant design limited the gases through this pathway by reducing the entrained gases to less than 2E-3 uCi/ml. When the entrained gas concentration in the monitor tank inlet exceeds 2E-3 uCi/ml, the noble gas release will be quantified by calculating the difference (in uCi's) between the gaseous activity added to the tank and the gaseous activity present in the effluent release sample. This difference will be the activity released through the tank vents and is quantified as an airborne release.

2.2 Liquid Effluent Concentrations

2.2.1 This section provides a description of the means that will be used to demonstrate compliance with **Radiological Effluent Controls** ~~Technical Specification~~ 2.3.1.

2.2.2 Compliance with the instantaneous limits of 10CFR20 is achieved by observance of discharge limits and described in Section 2.1.14. Normally for instantaneous release rate purposes, only dilution water from Unit 3 circulators is taken credit for, except as allowed by the Memorandum of Understanding between NYPA and Con Edison. A monthly report is issued which summarizes the radioactive releases from the site for the preceding month. This report provides information necessary to comply with quarterly and annual average limitations on discharge.

2.2.3 Each isolated liquid waste tank must be recirculated for at least two tank volumes prior to sampling in order to ensure a representative sample is obtained. A default minimum recirculation time may be used for 31 and 32 monitor tank in lieu of the actual calculation. This value is 4 hours, based upon the following calculation:

$$\frac{11750\ gals \cdot 2\ Tank\ Volumes}{100\ gal/\text{min}} = 3.9\ Hours \approx 4\ Hours$$

Note: 100 gpm is the recirculation flow rate as determined by pump curves.

2.2.4 The concentration in liquid effluents prior to dilution in the discharge canal is determined by sampling prior to release for batch releases. For continuous release the concentration can be determined by either grab sampling as in the batch release method or by direct reading radiation monitor. If the process radiation monitor is utilized care should be taken to ensure the calibration factor used is appropriate for the mixture being released.

For non-direct reading monitors, the following calculation is used.

$$C = CF * CR$$

C = Concentration of liquid effluent (uCi/ml) prior to dilution.

CF = Conversion factor of monitor $\frac{(uCi/ml)}{ncpm}$

CR = Count rate of monitor (ncpm)

2.2.5 The final diluted concentration in the discharge canal is determined by the following:

$$CD = (C) * (f) / (F)$$

Where: CD = Diluted concentration in the discharge canal in uCi/ml

C = Concentration in the liquid to be released prior to dilution in uCi/ml

F = Dilution flow in the discharge canal in gal/min

f = Release rate of liquid effluent in gal/min

NOTE: This equation is not used for calculating allowable release rates.

2.2.6 Calculation of Maximum Permissible Concentration in liquid effluents

a. This section describes the methodology used to ensure the requirements of section 2.3.1 of the **RECS** ~~RETS~~ are satisfied. The total discharge canal concentration of radionuclides must be maintained less than the effective maximum permissible concentration for the radionuclide mixture, **as per** ~~when averaged per~~ 10CFR20~~.106a~~. The noble gases will be included using the limit 2E-4 uCi/ml as specified in section 2.3.1 of the **RECS** ~~RETS~~. This will normally be ensured by using an Allowed Dilution Concentration on each discrete release. This differs from the ADC calculated in 10CFR20 appendix B in that for radioisotopes that do not have gammas greater than 60 kev emitted during decay, default values are included to estimate their contribution. The Allowed Diluted Concentration is calculated as follows:

$$ADC = \frac{MPCW_t}{1 + \frac{CB}{CG}}$$

CG = Total concentration of gamma emitting isotopes in current release (μCi/ml)

ADC = Allowed diluted concentration for current release (μCi/ml)

e. Calculate the permissible discharge rate as follows:

$$D = \frac{ADC \cdot B}{CG}$$

Where: ADC = Allowed diluted concentration as calculated in Step 2.2.6.a, in uCi/ml

D = Permissible discharge rate in gal/min

B = Adjusted dilution flow from the unit, in gpm, from Step 2.2.6.d, above, as follows:

B = Available Dilution Flow - Required Dilution Flow (E)

CG = Gamma emitter concentration in uCi/ml

2.3 Liquid Effluent Dose Calculation Requirements

2.3.1 Section 2.3.2 of the **Radiological Effluent Controls** ~~Technical Specification~~ requires that the dose or dose commitment above background to an individual in an unrestricted area from radioactive materials in liquid effluents released from each reactor unit shall be limited:

a) During any calendar quarter: Less than or equal to 1.5 mrem to the total body and to less than or equal to 5 mrem to any organ.

b) During any calendar year: Less than or equal to 3 mrem to the total body and to less than or equal to 10 mrem to any organ.

NOTE: If either of the above limits is exceeded by a factor of two or more, then cumulative dose contributions from direct radiation would be determined by evaluation of existing perimeter and environmental TLDs per **RECS** ~~Tech. Spec.~~ 2.6.**A** ~~B~~.

2.3.2 Section 2.3.3 of the **Radiological Effluent Controls** ~~Technical Specifications~~ requires that appropriate portions of the radwaste treatment system be used to reduce the radioactive material in liquid waste prior to their discharge when the projected dose due to liquid effluent from each reactor unit when averaged over 31 days, would exceed 0.06 mrem to the total body or 0.2 mrem to any organ. Doses due to liquid release shall be projected at least once per 31 days.

These doses are projected based on the dose methodology in Section 2.4. or 2.5. The average of previous months' doses is used to project future dose.

2.3.3 Section 2.3.1 of **Radiological Effluent Controls** ~~Technical Specifications~~ require that the concentration of radioactive material released from the site shall be limited to **10 times** the concentration~~s~~ **values** specified in 10 CFR Part 20, Appendix B, Table **2** ~~II~~, Column 2 for radionuclides other than dissolved or entrained noble gases ~~(when averaged per 10CFR20.106a)~~. For dissolved or entrained noble gases the concentration shall be limited to 2E-4 uCi/ml total activity.

2.4 Dose Methodology (Computer Calculation)

2.4.1 NUREG 0133 (Ref. 1, Section 4.3, Pg. 14) states that cumulative dose contributions should consider the dose contribution from the maximum exposed individual's consumption of fish, invertebrates, and potable water as appropriate. The river at IP3NPP is considered to be fresh water when in reality it is a tidal estuary and never completely fresh. Observed average chlorosity at IP3NPP has ranged as high as 2.5 g/l or about 13% sea water and 87% fresh water. Hence, use of the Hudson River for water supply purposes is precluded south of Chelsea (mile point 65) which is the nearest point of potable water supply. Radionuclide concentrations in the nearest water supply have been calculated (Ref. 2) to be a factor of at least 500 lower than the river water in the Indian Point area. Exposures from ingestion of drinking water is therefore negligible.

Based on these factors, potable water consumption is not considered to be a pathway at IP3NPP. Thus, at IP3NPP, the cumulative dose considers only the dose contributions from the maximum exposed individuals consumption of fish and invertebrates. Tables of dose factors for three age groups were developed as per Section 2.4.3 and are included as Tables 2-1, 2-2, and 2-3. (Infant dose factors are 0 and are not included).

2.4.2 The relationships and methods that form the calculational base for dose accounting for the liquid effluent pathway are described in this section. These relationships can be used to meet the calculational requirements of Section 2.3.1. The cumulative dose factors (AiT) are calculated in Section 2.4.3. The following equation is generally applicable and can be used for any number of isotopes released over any time period. The equation for D(T) is to be summed over all i nuclides:

$$D(T) = AiT = \sum_{k=1}^{n} (dtk)(Cik)(Fk)$$

Where:

D(T) = The cumulative dose commitment to the total body or any organ, T, from liquid effluents for the total time period equal to the sum from k=1 to n of dtk, in mrem.

dtk = The length of the kth time period over which Cik and Fk are averaged for all liquid releases, in hours.

Cik = The average concentration of radionuclide, i, in undiluted liquid effluent during time period dtk from any liquid release, in μCi/ml.

n = The total number of releases considered.

AiT = The site related ingestion dose commitment factor to the total body or any organ for each IP3NPP identified principal gamma and beta emitter listed in Table 2-1, 2-2, and 2-3, in mrem-ml per hr-μCi.

Fk = The near field average dilution factor for Cik during any liquid effluent releases. Defined as the ratio of the maximum undiluted liquid waste flow during release to the average flow from the site discharge structure to unrestricted receiving waters, times an applicable factor.

The term Cik is the composite undiluted concentration of radioactive material in liquid waste at the release point as determined by the radioactive liquid waste sampling and analysis program as contained in the **Radiological Effluent Controls** ~~Technical Specifications~~. All dilution factors beyond the sample point are included in the Fk and AiT terms.

The term Fk is a near field average dilution factor and is determined as follows:

$$Fk = \frac{\text{Liquid Radioactive Waste Flow}}{\text{[Discharge Structure Exit Flow * Applicable Factor]}}$$

The liquid radioactive waste flow is the flow from all continuous and batch radioactive effluent releases specified in **the Radiological Effluent Controls** ~~Technical Specifications~~ from all liquid radioactive waste management systems. The discharge structure exit flow is the average flow during disposal from the discharge structure release point into the receiving body of water. Based on studies by New York University Medical Center (ref. 14 page 7). the appropriate "Applicable Factor" is 5.

In order to accurately determine Fk, it is calculated based on actual dilution flow from its site for the time period considered. This affords a quantitative assessment of radiation dose resulting from liquid effluent releases at IP3NPP. The determination and use of dilution factors is discussed in Section 2.2.

3.0 GASEOUS EFFLUENTS

3.1 Gaseous Effluent Releases - General Information

3.1.1 The surveillance and lower limit of detection requirements for gaseous radioactive effluents are contained in the **Radiological Effluent Controls** ~~Technical Specifications~~. Lower limits of detection calculations are addressed in Appendix B.

3.1.2 A completed and properly authorized Airborne Radioactive Waste Release Permit shall be issued prior to the release of airborne activity from the waste gas holding system and containment purge. If a containment purge exceeds 150 hours in duration then the purge will be considered a continuous, long term release for reporting purposes (See Section 3.1.16).

3.1.3 Since Indian Point is a two unit site, the derived instantaneous uCi/sec limits delineated in Section 3.2.1 are apportioned to each site. The time-average limits in 3.2.2, 3.2.3, and 3.2.4 are "per reactor" limits and the full dose limits are applicable to IP3.

3.1.4 During cold shutdown, there is no flowpath for a release from the Condenser Air Ejector, and the monthly grab sample described in **Radiological Effluent Controls** ~~Technical Specifications~~ Table 3.4.1-1 is not required. During normal plant operation without a primary to secondary leak, almost all gaseous releases are through the main Plant Vent. A negligible amount may be identified in the Administration Building and Radioactive Machine Shop vents. In the event of extended operation with a primary to secondary leak, low level releases are expected from both the blowdown flash tank vent and condenser air ejector. However, the limits on steam generator leakage are much more restrictive than those for effluent releases. Allocation of portions of the allowable release rate to these various release points is not warranted. If the instantaneous release rate is used (taking advantage of the one hour averaging allowed by 3.3.1 or 3.4.1), then all release points will be considered when establishing the alarm setpoint per section 1.

3.1.5 For releases that are expected to continue for periods over two days, a new release permit will normally be issued each day. Containment purge release permits may be terminated at the discretion of the RES Manager and be considered as a continuous release until the purge is terminated. However, when plant conditions change that will cause the activity in containment to significantly change, a new permit shall be issued.

3.1.6 Assurance that the combined gaseous releases from Units 2 and 3 do not exceed Section 3.2.1 limits for the site is provided by administrative controls agreed to in the Memorandum of Understanding (#16) between Con Edison and the New York Power Authority concerning gaseous effluent discharge and the requirements of the document.

3.1.7 By mutual agreement with Con Edison's IP2NPP Shift Supervisor, one unit can reduce or eliminate discharges for a period of time to allow the other unit to use the full site permissible discharge rate, or a specific portion thereof, for discharge when necessary.

3.1.8 Conservative release rate limitations have been established to aid in controlling time average dose limits. The annual average limit shall normally be used for calculating limitations on discharge. If this limitation unduly restricts an individual release, the quarterly average release rate limit (μCi/sec) may be used for the release provided the quarterly time average dose limit will not be exceeded and the Operations Manager or Assistant Operations Manager is in agreement. The instantaneous limit for release may be used if the ~~Plant Manager~~ **Site Executive Officer** or his Designee is in agreement. The instantaneous limit should be checked by the Radiological and Environmental Services Department when applied.

When the instantaneous limit is applied, the release may be averaged over a one hour time interval.

3.1.9 Containment Pressure Reliefs

Containment pressure reliefs occur frequently enough to be considered continuous and are sampled from the plant vent release path. However, to ensure that the release rate will not be exceeded, the containment noble gas monitor (R-12) and the expected flowrate are used to calculate a release rate. The effluent noble gas monitor in the plant vent is used to verify these calculations (Ref: NUREG 0472, REV.3, DRAFT 6, TABLE 3.1-13).

3.1.10 Composite Particulate Samples

One of the following methods will be used to obtain a composite sample:

- Samples will be taken weekly and integrated monthly; or
- Samples will be taken weekly and counted together once per month (Ref: NUREG 0472, REV. 3, DRAFT 6, TABLE 4.11-12).

3.1.11 Gas Storage Tank Activity Limit

The noble gas activity limit of 50,000 Ci in the gas storage tanks was calculated using the equations from Section 5.6.1 of NUREG 0133 and the following parameters:

Ki = 294 mrem-m^3/μCi-yr, Xe-133 equivalent Table B-1 (Reg Guide 1.109)

X/Q = 1.03×10^{-3} s/m^3, Indian Point 3 FSAR

Qit must be calculated so that the dose is less than 500 mrem in a year:

$$Qit = \frac{(500\ \text{mrem})\ 3.15E7\ \text{s/yr}}{(1E6\mu\text{Ci/Ci})(294\text{mrem m}^3/\mu\text{Ci yr})(1.03E\text{-}3\text{s/m}^3)} = 52{,}011\ \text{Ci};\ \underline{50{,}000\ \text{Ci}}$$

This limit assumes 100% Xe-133 as per NUREG 133. Utilizing the Ki from an expected mixture during RCS degasification (Ki = 787 mrem-m^3/μCi-yr), the gas tank conservative administrative limit should be 19,400 curies.

The basis for assuring that accidental gas releases from liquid holdup tanks do not exceed Section 3.2.1 limits, is Technical Specifications Appendix A, 3.1.D (≤ 1 uCi/cc Dose Equivalent Iodine-131 in Reactor Coolant). Using the assumptions discussed in FSAR section 14.2.3, the potential total curies in the liquid holdup tanks is limited to less than the conservative limit for the Gas Storage Tanks (19,400 curies).

3.1.12 Gas Storage Tank Surveillance Requirements

There are two methods available to ensure that the activity in the gas storage tank is within the conservative administrative limit (19400 Ci).

$$\frac{1.94E{+}4\ Ci \cdot 1E6\ uCi/Ci}{525\ ft^3 \cdot \left(\frac{164.7\ psia}{14.7\ psia}\right) \cdot 2.83E4\ cc/ft^3} = 1.17E{+}2\ uCi/cc$$

1. The total gaseous activity will normally be limited to less than 117 uCi/cc. If this concentration limit is exceeded, then the contents of the tank will be monitored and actions taken to ensure the 19,400 curie per tank limit is not exceeded.

2. The waste gas line monitor (R-20) reads in uCi/cc. It allows for control of waste gas tank curie content by limiting the input concentration to 117 uCi/cc, thereby limiting the curies to 19,400.

Large gas decay tanks on fill and CVCS tanks (which are indicative of the gas mixture in or from the reuse system) are continuously monitored for H_2 and O_2 through in-line instrumentation. With either in-line instrument out of service, a grab sample of the tank on receipt shall be taken daily, unless in degassing operation, when the periodicity is every four hours.

Other primary system tank cover gases can be manually directed through these instruments for individual samples.

3.1.13 The normal flow rate measurement for the Radioactive Machine Shop (RAMS) and the Plant Vent (PV) is obtained from the installed process monitor. When the instrument is out of service, the estimated flow from the RAMS is obtained by summing each operable exhaust fan's design flow rate. Estimated flow from the PV is obtained similarly, or from an alternate flow instrument (still considered an estimate). The design system flow rate of 12500 CFM is used for Administration Building ventilation. The process flow rate monitor surveillance requirements specified in **RECS** ~~RETS~~ Table 3.2-1 are not applicable for the Administration Building, nor are they applicable when the RAMS or PV installed instruments are out of service and rated fan flow is used.

3.1.14 The activity released via the blowdown flash tank vent is determined by obtaining the steam generator blowdown Tritium, Noble Gas, and Iodine activity, and applying a partition factor (0.05) for the Iodine releases as listed in Regulatory Guide 1.42 "Interim Licensing Policy On As Low As Practicable for Gaseous Radioiodine Releases from Light Water Cooled Nuclear Power Reactors". (Ref:NUREG 0472, Rev3, DRAFT 6, TABLE 3.3-13).

3.1.15 Carbon 14 is released at a rate of 9.6 curies per GW(e).yr based upon studies performed by the New York State Department of Health at Indian Point 3. This is released in a gaseous form, the primary dose from which is in the CO_2 form. Therefore, these are exempt from the dose limits specified in Sections 2.4.1, 2.4.3 and 2.4.4 of the **RECS** ~~RETS~~. The Carbon 14 doses resulting from these releases are calculated in accordance with the methodology in Reg. Guide 1.109 and listed in the Radiological Impact on Man section of the Semi-annual Radioactive Effluent Release Report. This calculation is performed using the fraction of carbon 14 released in the CO_2 form (26%).

3.1.16 Evaluations of previous gas decay tank and containment purge releases have been performed. These evaluations indicate that these "Short Term Releases" (less than 500 hours per year and less than 150 hours per quarter) are sufficiently random to utilize the long term meteorological dispersion factor (NUREG 0133, Section 3.3, Page 8). The short term correction factor, will only be used when non-random releases are to be made, routinely.

3.1.17 The liquid waste monitor tanks have an airborne release pathway. The original plant design limited the gases through this pathway by reducing the entrained gases to less than 2E-3 uCi/ml. The removal of the CVCS gas stripper under modification 86-3-122 CVCS requires the quantification of these gases when the entrained gaseous activity in the monitor tank inlet exceeds 2E-3 uCi/ml. No action is required if the inlet noble gas concentration is less than 2E-3 uCi/ml.

This gas release will be quantified by calculating the difference (in uCi's) between the gaseous activity added to the tank and the gaseous activity present in the effluent release sample. This difference will be quantified as an airborne ground level batch release, using a X/Q of 5.0E-5 sec/m^3. A separate release permit evaluating this release is not required prior to release. Calculation of this rate of release is not required, however the time average dose contribution shall be calculated and controlled per Sections 3.3 and 3.4 of the ODCM. Section 3.6 provides additional detail relative to the finite cloud correction assumptions for this pathway.

3.1.18 Airborne releases from the Steam Generator Safety or Atmospheric Dump Valves can occur during a Primary to Secondary leak. Tritium, Noble Gas, and Iodine release rates are determined using a source term activity (Main Steam or Steam Generator Blowdown), an Iodine partition factor (0.05, as per Section 3.1.14), and a release rate, determined from Engineering Design Calculation 187 (Steam Generator Atmospherics), or design flowrate (from Steam Generator Safeties).

3.1.19 Releases from the steam driven auxiliary feed pump vent (and other abnormal release points) are calculated by obtaining the release rate (corrected for system pressure, as applicable) and source term activity (eg. Main Steam) for Tritium, Noble Gas, and Iodine, partitioned as per Section 3.1.14.

3.2 Gaseous Effluent Dose Calculation Requirements

3.2.1 Section 2.4.1 of the **Radiological Effluent Controls** ~~Technical Specifications~~ requires that the dose rate due to radioactive materials released in gaseous effluents from the site at or beyond the site boundary shall be limited to:

a) For noble gases: Less than or equal to 500 mrem/yr to the total body and less than or equal to 3000 mrem/yr to the skin; and

b) For Iodine 131, Tritium, and for all radioactive materials in particulate form with half lives greater than 8 days: Less than or equal to 1500 mrem/yr to any organ.

The methodologies for performing these calculations are discussed in Sections 3.3.1 and 3.3.2, respectively.

3.2.2 Section 2.4.2 of the **Radiological Effluent Controls** ~~Technical Specifications~~ requires that the air dose due to noble gases released in gaseous effluents from each reactor unit at or beyond the site boundary shall be limited to:

a) During any calendar quarter: Less than or equal to 5 mrad for gamma radiation and less than or equal to 10 mrad for beta radiation.

b) During any calendar year: Less than or equal to 10 mrad for gamma radiation and less than or equal to 20 mrad for beta radiation.

The methodology for calculating these doses is discussed in Section 3.3.3.

NOTE: If either of the above limits is exceeded by a factor of two or more, then cumulative dose contributions from direct radiation would be determined by evaluation of existing perimeter and environmental TLDs per **Radiological Effluent Control** ~~Technical Specification~~ 2.6.**A** ~~B~~.

3.2.3 Section 2.4.3 of the **Radiological Effluent Controls** ~~Technical Specifications~~ requires that the dose to a member of the general public from Iodine 131, Tritium, and radionuclides in particulate form (half-lives > 8 days) in gaseous effluents released from each reactor unit shall be limited to:

a) Less than or equal to 7.5 mrem to any organ during a calendar quarter

b) Less than or equal to 15 mrem to any organ during a calendar year.

Cumulative dose contributions for the current calendar quarter and current calendar year shall be determined at least once every 31 days. The methodology for calculating these doses is discussed in Section 3.3.4.

NOTE: If either of the previous limits is exceeded by a factor of two or more, then cumulative dose contributions from direct radiation would be determined by evaluation of existing perimeter and environmental TLDs per **Radiological Effluent Control** ~~Tech. Spec.~~ 2.6.**A** ~~B~~.

3.2.4 Section 2.4.4 of the **Radiological Effluent Controls** ~~Technical Specifications~~ requires that for each reactor unit, the appropriate portions of the gaseous radwaste treatment system shall be used to reduce radioactive effluents in gaseous waste prior to their discharge when projected gaseous effluent air dose at the site boundary when averaged over 31 days, would exceed 0.2 mrad for gamma radiation or 0.4 mrad for beta radiation. These doses are projected based on the dose methodology discussed in Section 3.3.3 (gas) and 3.3.4 (iodine) and the average previous months' doses are used to project future doses.

The appropriate portions of the ventilation exhaust treatment system shall be used to reduce radioactive materials in gaseous releases when the projected doses averaged over 31 days, would not exceed 0.3 mrem to any organ (at nearest residence).

Dose due to gaseous release from the site shall be calculated at least once every 31 days.

3.3 Dose Methodology (Computer Calculation)

3.3.1 Instantaneous Dose Rates - Noble Gas Releases

When the instantaneous limit applies, the process radiation monitor response or release rate can be averaged over a one-hour time interval.

3.3.1.1 The equations developed in this section are used to meet the calculational requirements of paragraph 3.2.1. The magnitude of this pathway is the same for all age groups so there is no critical group. Based on an agreement with Consolidated Edison, IP3NPP utilizes 50% of the site release limit as measured in Ci/sec which translates to 55.4% of the applicable dose rate limit for noble gas releases.

4.0 SAMPLE LOCATIONS

Figure 4.1 is a map which shows the location of environmental sampling points within 2.5 miles of the Indian Point Plant and Figure 4.2 is a map providing the same information for points at greater distances from the plant. Table 4.1 provides a description of environmental sample locations and the sample types collected at each of these locations.

The locations listed in Table 4.1 are the **RECS** ~~RETS~~ designated locations only. The air sample locations were chosen considering the highest average annual D/Q sectors and the practicality of locating continuous air samplers. There are additional sample locations not listed in Table 4.1 that may be maintained to provide the program with additional supporting information.

TABLE 4.1 (Continued)

RETS SAMPLE DESIGNATION	LOCATION	DISTANCE
ExposurePathway/Sample:	Airborne	
A1	Algonquin Gas Line	0.25 mi - SW
A2	NYPA Training Bldg	0.4 mi - S
A3	Met Tower	0.4 mi - SSW
A4	NYU Tower	0.8 mi - SSW
A5	Control Location 1 (Roseton)	20 mi - N
Exposure Pathway/Sample:	Waterborne - Surface (Hudson River Water)	
Wa1	Plant Inlet	N/A
Wa2	Discharge Canal	N/A
Exposure Pathway/Sample:	Waterborne - Drinking	
Wb1	Camp Field Reservoir	3.5 mi - NE
Exposure Pathway/Sample:	Sediment from Shoreline	
Wc1	White Beach	0.9 mi - SW
Wc2	Manitou Inlet	4.5 mi - NNW

Exposure Pathway/Sample: Milk

There are no milk animals within 8 km distance of Indian Point; therefore, no milk samples are taken. See Note 2.

Exposure Pathway/Sample: Ingestion-Fish and Invertebrates

The ~~RETS~~ **RECS** designate two required sample locations labeled Ib1 and Ib2. The downstream Ib1 location and samples will be chosen where it is likely to be effected by plant discharge. Ib2 will be a location upstream that is not likely to be effected by plant discharge. The following fish species are considered acceptable sample species.

Striped Bass	Bluegill Sunfish
White Perch	Pumpkin Seed Sunfish
White Catfish	Blueback Herring
American Eel	Crabs

Exposure Pathway/Sample: Ingestion-Food Products (Broad Leaf Vegetation) (See Note 1)

Ic1	Met Tower, SSW Sector	0.4 miles - SSW
Ic2	NYPA Training Bldg, S Sector	0.4 miles - S
Ic3	Roseton (North)	20 miles - N

TABLE 4.1

NOTES

NOTE 1

Radiochemical separation and analysis is not required for I-131 vegetation samples: as long as the required **RECS** ~~RETS~~ LLD is met using gamma spectroscopy.

NOTE 2

The requirement to obtain and analyze samples from milch animals within 8 km of the site is intended to ensure monitoring of the "cow-milk" and vegetation pathways. Such samples would only be of value were the milk used for human consumption. Thus, only milch animals whose milk is used for human consumption are considered in the pathway and sample evaluation.

APPENDIX B

DETECTION CAPABILITIES

The LLD is the smallest concentration of radioactive material in a sample that will be detected with 95% probability with 5% probability of falsely concluding that a blank observation represents a "real" signal.

For a particular measurement system (which may include radiochemical separation):

$$LLD = \frac{\frac{2.71}{T_s} + 3.29 s_b \cdot \sqrt{1 + (\frac{T_b}{T_s})}}{E \cdot V \cdot k \cdot Y \cdot e^{-\lambda t}}$$

Where:

LLD = The lower limit of detection as defined above (as picocurie per unit mass or volume).

T_s = The sample counting time in minutes.

s_b = The standard deviation of the background counting rate or of the counting rate of a blank sample as appropriate (as counts per minute).

T_b = The background count time in minutes.

E = The counting efficiency (as counts per transformation).

V = The sample size (in units of mass or volume).

k = A constant for the number of transformations per minute per unit of activity (normally, 3.7E+4 dps per uCi).

Y = The fractional radiochemical yield (when applicable).

λ = The radioactive decay constant for the particular radionuclide.

t = The elapsed time between midpoint of sample collection and time of counting.

Note: The above LLD formula accounts for differing background and sample count times. The IP3 Radiological Environmental Monitoring Program, REMP, uses an LLD formula that assumes equal background and sample count times, in accordance with **Radiological Effluent Controls** ~~Technical Specifications~~. When the above LLD formula is more appropriate for the effluents program, it may be used.

The constants 2.71 and 3.29 and the general LLD equation were derived from the following two sources:

1) Currie, L.A. "Limits for Qualitative Detection of Quantitative Determination". (Anal. Chem. 40:586-593, 1968); and,

2) Mayer, Dauer "Application of Systematic Error Bounds to Detection Limits for Practical Counting". (HP Journal 65(1): 89-91, 1993)

The value of s_b used in the calculation of the LLD for a detection system shall be based on the actual observed variance of the background counting rate or of the counting rate of the blank samples (as appropriate) rather than on an unverified theoretically predicted variance. In calculating the LLD for a radionuclide determined by gamma ray spectrometry, the background shall include the typical contributions of other radionuclides normally present in the samples. Typical values of E, V, Y, and t shall be used in the calculation. The background count rate is calculated from the background counts that are determined to be within ± one FWHM (Full-Width-at-Half-Maximum) energy band about the energy of the gamma ray peak used for the quantitative analysis for that radionuclide.

It should be recognized that the LLD is defined as an a priori (before the fact) limit representing the capability of a measurement system and not as an a posteriori (after the fact) limit for a particular measurement.

To handle the a posteriori problem, a decision level must be defined. The remainder of Appendix B discusses the use of the Critical Level concept. Following an experimental observation, one must decide whether or not a real signal was, in fact, detected. This type of binary qualitative decision is subject to two kinds of error: deciding that the radioactive material is present when it is not (a: Type I error), and the converse, failing to decide that it is present when it is (b: Type II error). The maximum acceptable Type I error (a), together with the standard deviation, S_{net}, of the net signal when the net signal equals zero, establish the Critical Level, L_c, upon which decisions may be based.

Operationally, an observed signal, S, must exceed L_c to yield the decision, detected.

$$L_c = k_a s_b (1+T_b/T_s)^{0.5}$$

Where:

k_a is related to the standardized normal distribution and corresponds to a probability level of 1-a. For instance, selection of a = 0.01 corresponds to a 99% confidence level that activity is present. When determining the L_c for different measurement processes, it is allowable to set a at less than or equal to 0.05 as long as the following condition is met:

To set a for L_c determination at less than 0.05, the equation for the LLD (which places a less than or equal to 0.05) should be employed to verify that the calculated LLD is less than or equal to the LLDs specified in the IP-3 **RECS** ~~RETS~~. This calculation, if necessary, will be performed on a case by case basis.

SOLID RADIOACTIVE WASTE PROCESS CONTROL PROGRAM

1.0 PURPOSE

The purpose of this document is to provide instructional guidance and a description of the solid radioactive waste Process Control Program (PCP) at the Indian Point No. 3 Nuclear Plant (Plant). The PCP describes the methods used for processing, classification and packaging low-level radioactive waste into a form acceptable for disposal, in accordance with 10 CFR Part 61 and current disposal site criteria.

To ensure the safe operation of the solid radwaste system, the solid radwaste system will be used in accordance with this Process Control Program to process wet radioactive wastes to meet shipping and burial ground requirements.

This document addresses the process control program in the context of disposal criteria, and includes those of the Barnwell, South Carolina Low Level Radioactive Waste (LLRW) disposal facility. Currently, the New York State generators of LLRW do not have access to that facility.

This document shall be reviewed for applicability prior to the next LLRW disposal shipment.

2.0 SCOPE

This document describes current and planned practices for sampling, classification, processing and packaging of radioactive waste to current regulations and burial site criteria regardless of whether or not we are storing on site. This document does not address irradiated hardware which will be managed on a case-by-case basis under the direction of the Waste Management General Supervisor.

RE-PCP
Rev. 4

2.2.3 The types of radioactive material sent to intermediate processors could include, but is not limited to, the following:

- DAW
- Steam Generator Blowdown Resin
- Steam Generator Blowdown Filters
- Contaminated Oil
- Contaminated Soil
- Filter media

2.3 Disposition of Radioactive Material Sent Directly to a Disposal Site

This document addresses both the 10CFR Part 61.55 and Part 61.56 requirements for the waste streams listed in Section 2.1.

3.0 REFERENCES

3.1 Federal Regulations

3.1.1 Code of Federal Regulations, Title 10, Part 20.

3.1.2 Code of Federal Regulations, Title 10, Part 61.

3.2 Plant Procedures

3.2.1 Quality Assurance Procedure Manual Section 18.1, "Quality Assurance Audit Program".

3.2.2 Quality Assurance Instructions, QAI 1.3, "Process Control Program (PCP), Tech Spec B QA Surveillance Plan".

3.2.3 AP-3 "IP3 procedure Preparation, Review & Approval".

~~3.2.4 RE-ADM-1-4, "RES Department Commitment Tracking System".~~

3.2.22 RE-RWM-12-40, "Use of the Westinghouse DOT 2R/20WC Cask".

3.2.23 RE-RWM-12-42, "Operation of the Waste Compactor for Drums".

3.2.24 RE-RWM-12-46, "Sorting table use".

3.2.25 RE-RWM-12-44, "Use of the Underwater Filter System".

3.2.26 RE-RWM-12-45, "Use of the TRASHP Computer Code".

3.2.27 RE-RWM-12-47, "Installation and maintenance of Pall Filter Co. Nuclear Plant Filters".

3.2.28 RE-RWM-12-48, "Spent Resin Transfer Using the NuPac Resin Drying System".

3.2.29 RE-TRA-15-13, "Radwaste Utility Operator Qualification Program".

~~3.2.30 RE-TRA-15-15, "Senior Radwaste Utility Operator Qualification Program".~~

3.2.31 RE-RWM-12-28, "Interim Radwaste Storage Facility (IRWSF)".

3.3 Disposal Site Requirements

3.3.1 Barnwell Waste Management Facility site disposal criteria.

3.3.2 Barnwell (South Carolina) disposal site license.

~~3.3.3 Richland (Washington) disposal site license.~~

3.4 NRC Information Notices

3.4.1 NRC Information and Enforcement Bulletin 79-19: Packaging of Low-Level Radioactive Waste for Transport and Burial

3.4.2 NRC Information Notice 80-24: Low-Level Radioactive Waste Burial Criteria

3.4.15 NRC Information Notice 89-27: Limitations on the Use of Waste Forms and High Integrity Containers for the Disposal of Low-Level Radioactive Waste

3.4.16 NRC Information Notice 92-62: Emergency Response Information Requirements for Radioactive Material Shipments

3.4.17 NRC Information Notice 92-72: Employee Training and Shipper Registration Requirements for Transporting Radioactive Materials

3.5 Vendor Documents

==========

NOTE

The operational aspects of vendor procedures are incorporated into site-specific procedures for each particular process listed in Section 3.2 of this document.

==========

~~3.5.1 Pacific Nuclear Systems, Inc. Q.A. Manual, latest revision.~~

3.5.2 Nuclear Packaging, Inc., Dewatering System Topical Report No. TP-02-NP-~~1~~**A**, Rev. 0.

3.5.3 Chem-Nuclear Systems, Inc. Q.A. Program Document No. QA-AD-001, latest revision.

3.5.4 Chem-Nuclear Systems, Inc. Dewatering Control Process Containers Topical Report No. DW-11118-01-NP-A.

3.5.5 Scientific Ecology Group, Inc. Q.A. Program No. SEG/QA-100, latest revision.

3.5.6 Westinghouse-Hittman Nuclear, Inc. Mobil In-Container Dewatering and Solidification System Topical Report #STD-R-05-011NP-A.

3.5.7 TFC Nuclear Associates, Inc. Q.A. Manual.

3.5.8 TFC Nuclear Associates, Inc. Dewatering Test Report of NUHIC-120D (BR) Bead Resin, 1984.

3.5.9 TFC Nuclear Associates Topical Report for High Integrity Containers No. TFC-TV-84.

3.5.10 "RADMAN - A Computer Code", Main Topical Report.

3.5.11 NRC Acceptance Letter: RADMAN Topical Report, July 25, 1983.

4.0 RESPONSIBILITIES

The Waste Management General Supervisor has the overall responsibility for implementing the PCP. The Waste Management Processing and Transportation Supervisor is tasked with the day-to-day responsibilities for the following:

a) Implementing the requirements of this document.

b) Ensuring that radioactive waste is characterized and classified in accordance with 10CFR Part 61.55 and Part 61.56.

c) Ensuring that radioactive waste is characterized and classified in accordance with volume reduction facility and disposal site licenses and other requirements.

d) Designating other approved procedures (if required) to be implemented in the packaging of any specific batch of waste.

e) Providing a designated regulatory point of contact between the Plant and the NRC, or volume reduction facility or disposal site.

f) Maintaining records of on-site and off-site waste stream sample analysis and Plant evaluations.

g) Suspending shipments of defectively processed or defectively packaged solid radioactive wastes from the site when the provisions of this process control program are not satisfied.

5.1.20 Solidification - Shall be the conversion of wet wastes into a form that meets shipping and burial ground requirements.

5.1.21 Special Radionuclides - The RADMAN computer code term for radionuclides listed in Appendix F to 10CFR20.

5.1.22 Stability - As used in this document, "stability" means structural stability. Stability requires that the waste form maintain its structural integrity under the expected disposal conditions.

5.1.23 Training - A systematic program that ensures a person has knowledge of hazardous materials and hazardous materials regulations.

5.1.24 Type A Package - Is the packaging together with its radioactive contents limited to A_1 or A_2 as appropriate that meets the requirements of 49CFR Part 173.410 and Part 173.412, and is designed to retain the integrity of containment and shielding under normal conditions of transport as demonstrated by the tests set forth in 49CFR Part 173.465 or Part 173.466 as appropriate.

5.1.25 Type B Package - Is the packaging together with its radioactive contents that is designed to retain the integrity of containment and shielding when subjected to the normal conditions of transport and hypothetical accident test conditions set forth in 10CFR Part 71.

5.1.26 Waste Container - A vessel of any shape, size, and composition used to contain the final processed waste.

5.1.27 Waste Form - Waste in a waste container acceptable for disposal at a licensed disposal facility.

5.1.28 Waste Stream - A Plant specific and constant source of waste with a distinct radionuclide content and distribution.

5.1.29 Waste Type - A single packaging configuration and waste form tied to a specific waste stream.

7.0 PRECAUTIONS/LIMITATIONS

7.1 Precautions

a) Radioactive materials shall be handled in accordance with applicable radiation protection procedures.

b) All radioactive waste must be processed or packaged to meet the minimum requirements listed in 10CFR Part 61.56 (1) through (8).

7.2 Limitations

a) Only qualified personnel will characterize or package radioactive waste or radioactive materials.

b) All Plant personnel that have any involvement with radioactive waste management computer software shall be familiar with its functions, operation and maintenance.

c) With the provisions of this Process Control Program not satisfied, suspend shipments of defectively processed or defectively packaged solid radioactive wastes from the site.

8.0 SPECIAL TOOLS AND EQUIPMENT

8.1 Frequency of Use and Descriptions

Required tools and equipment will vary depending on the specific process and waste container that is used. The various tools and equipment which may be required are detailed in the vendor procedures listed in the Section 3.0 of this document.

9.0 PROCEDURE

9.1 Waste Management Practices

9.1.1 Solidification/encapsulation methods include the following:

a) Present and planned practice is NOT to solidify or encapsulate any waste streams.

b) All liquid waste is dewatered to less than 1 percent by volume prior to shipment.

c) If solidification is required in the future, then at least one representative test specimen from at least every tenth batch of each type of wet radioactive waste will be checked to verify solidification. If any specimen fails to verify solidification, the solidification of the batch under test shall be suspended until such time as additional test specimens can be obtained, alternative solidification parameters can be determined, and a subsequent test verifies solidification. If the initial test specimen from a batch of waste fails to verify solidification, then provide for the collection and testing of representative test specimens from each consecutive batch of the same type of wet waste until at least 3 consecutive initial test specimens demonstrates solidification. The process shall be modified as required to assure solidification of subsequent batches of water.

9.1.2 Operation and maintenance of dewatering systems and equipment include the following:

a) Present and planned practice is to utilize Plant personnel, supplemented by contracted vendor personnel, on a demand basis to operate and maintain dewatering systems and equipment using Plant procedures.

b) All disposal liners are manufactured by and purchased from QA approved vendors.

==========

NOTE

The South Carolina DHEC and CNSI recognize that filters and irradiated hardware will NOT routinely meet the 85 percent condition. Provided that containers of these wastes types are packaged to the fullest extent practicable, no written justification is required.

==========

Only personnel designated in writing as official representatives of the New York Power Authority can sign the Barnwell Waste Management Facility, Radioactive Shipment Manifest Form certification statements (blocks 18 and 19 on the manifest cover sheet).

9.7 Waste Packaging

9.7.1 Waste in it's final form will be packaged in accordance with Title 10 and Title 49 of the Code of federal regulations and in accordance with current burial site criteria as detailed in plant procedures.

9.8 Reporting

9.8.1 Releases
In accordance with Technical Specification Appendix B 4.3.2.1 and the REC section 5.1, ensure that the Annual Radioactive Effluent Release Report includes a summary of the quantities of solid radioactive waste released from the unit.

9.8.2 Major Changes to the Process Control Program
Licensee initiated major changes to the radioactive waste systems shall be reported to the Commission in the Annual Radioactive Effluent Release Report for the year in which the change evaluation was received by the PORC. The discussion of each change shall contain those items noted in the REC section 5.1.

ATTACHMENT VII TO IPN-98-018

INSTRUCTIONS FOR REPLACING PAGES IN THE TECHNICAL SPECIFICATIONS UPON APPROVAL OF THESE PROPOSED CHANGES TO TECHNICAL SPECIFICATIONS INCORPORATING RECOMMENDATIONS OF GENERIC LETTER 89-01 AND DRAFT PART 20 GENERIC LETTER

NEW YORK POWER AUTHORITY
INDIAN POINT 3 NUCLEAR POWER PLANT
DOCKET NO. 50-286
DPR-64

The pages of this Technical Specification amendment are to be inserted following the instructions below. The TAB notation indicates which section the page affects.

TAB	REMOVE PAGES	INSERT PAGES
Appendix A, 1.0 Definitions	1-6	1-6, 1-7
Appendix A, 6.5 Review and Audit	6-13	6-13
Appendix A, 6.9 Reports	6-14, 6-15, 6-16, 6-18, 6-19, 6-20, 6-21, 6-22	6-14, 6-14 (a), 6-14 (b), 6-14 (c), 6-15, 6-16, 6-18, 6-19, 6-20, 6-21, 6-22
Appendix B, Part II - Radiological	Section 1.0 - Definitions, Section 2.0 - Limiting Conditions, Section 3.0 - Surveillance, Section 4.0 Bases, Section 5.0 - Administrative Controls in their entirety	Section 1/2.0 - Limiting Conditions for Operation and Surveillance Requirements; 1/2-1, 1/2-2, 1/2-3, 1/2-4, 1/2-5, 1/2-6 Section 3.0 - Bases 3-1 Section 4.0 - Administrative Controls 4-1, 4-2, 4-3, 4-4, 4-5, 4-6

ATTACHMENT VIII TO IPN-98-018

COMMITMENTS ASSOCIATED WITH

PROPOSED TECHNICAL SPECIFICATION REGARDING

PROPOSED CHANGES TO TECHNICAL SPECIFICATIONS

INCORPORATING RECOMMENDATIONS OF GENERIC LETTER 89-01

AND DRAFT PART 20 GENERIC LETTER

NEW YORK POWER AUTHORITY
INDIAN POINT 3 NUCLEAR POWER PLANT
DOCKET NO. 50-286
DPR-64

List of Commitments

Number	Commitment	Due
IPN-98-018-01	Procedures will be updated to reflect change in Technical Specifications.	90 Days after receiving Technical Specification Change