Charles J. Durkin
Vice President

Consolidated Edison Company of New York, Inc.
4 Irving Place, New York, NY 10003
Telephone (212) 460-6300

August 3, 1998

Re: Indian Point Unit No. 2
Docket No. 50-247

Document Control Desk
US Nuclear Regulatory Commission
Mail Station PI-137
Washington, DC 20555

SUBJECT: Evaluation of a Relevant Condition in Accordance With ASME B&PV Code, Section XI (IWB-3522) For Class 2 Piping, and Request for Approval of an Alternative to Code Repair in Accordance with 10 CFR 50.55a(a)(3)(I)

Consolidated Edison requests approval of an alternative to performing a code repair on a section of Class 2 piping, discovered to have a relevant condition, until the 1999 refueling outage. Performance of a code repair at this time (i.e., cold shutdown) would require defueling of the reactor vessel which would result in hardship without compensatory quality or safety improvement. The proposed alternative approach described and evaluated in this submittal provides an acceptable level of quality and safety.

The purpose of this letter is to submit information supporting the alternative approach. The code edition applicable to Indian Point Unit No. 2 also provides requirements for acceptance by evaluation of relevant conditions for continued service if the evaluation demonstrates the component's acceptability.

On July 30, 1998, Con Edison personnel were preparing to conduct leakage-rate testing on Residual Heat Removal (RHR) mini-flow valve 743. While setting up for this testing, two minor pinhole leaks were observed on a section of RHR pump mini-flow line # 337. Upon further investigation using dye penetrant developer, three flaws were identified. These flaws have been characterized as isolated pinholes which are not located in clusters. Ultrasonic testing (UT) was performed at each pinhole location and at various other locations along line # 337 between line # 10 and valve 1819. Ultrasonic digital thickness measurements of the pipe revealed no general wastage, i.e., the pipe is of uniform thickness. Subsequent radiographic testing (RT) examinations revealed the presence of a circumferential 1/4 inch indication within the pipe near one of the pinhole locations. Line # 337 is commonly referred to as the mini-flow line and is utilized to provide a minimum recirculation

A047

9808120304 980803
PDR ADOCK 05000247
P PDR

capability for the RHR pumps during certain accident conditions. This line is also used to obtain chemical samples when the RHR system is in service. Line # 337 is located along the common suction supply line from # 22 reactor coolant hot leg to the RHR pumps, and cannot be isolated without securing the RHR system. In the current plant cold shutdown condition (<200F), Technical Specifications Table 3.1.A-1 would not permit securing the RHR system to effect repair to line # 337. This line is designated as Quality Group B piping in accordance with Regulatory Guide 1.26.

On August 3, 1998, a telephone conference was held with the NRC to discuss Con Edison's proposed use of an alternative to performing a code repair with a subsequent submittal of a formal relief request in accordance with 10 CFR 50.55a (a)(3)(I) to be provided. The installation of a clamp to maintain piping system integrity in the unlikely event of a complete failure of the pipe was discussed. Installation of this clamp is considered conservative as the line in its current condition has been determined to be operable in its current state.

The review of the applicable ASME Section XI Code indicates that it contains provisions for this type of observed leakage with boron residue, characterized as a relevant condition, in Class 2 components. The Code specifies the submittal of an evaluation of the relevant condition to the regulatory authority. In furtherance of this provision, an evaluation of the relevant condition was performed and is included as Attachment 3.

At this time the cause of the relevant condition is believed to be the result of arc strikes. The cause does not appear to be service-induced as the UT results indicate no wall thinning. A detailed failure analysis can only be performed after removal and examination of the pipe. Based upon the evaluation in Attachment 3, the assumed flaws are stable and are not expected to propagate. Also included as attachments are the review of applicable code sections (Attachment 1), the results of the non-destructive examinations performed on July 30 - 31 (Attachment 2), and an evaluation of the flaws found on RHR line #337 (Attachment 3).

Plant operation with this relevant condition unaddressed by a repair has been determined to be acceptable as the affected line has been demonstrated to be operable for both normal and accident conditions. The minute weep "as is" poses no housekeeping problems relating to itself or surrounding safety equipment. There is no significant flow diversion threat to the system safety function requirements. Nevertheless, surveillance, both daily and at the time of RHR pump tests, will be performed to detect changes in the observable leakage rate. The NRC resident inspector will be notified of any adverse changes of the subject condition. It is our intention to continue to evaluate the current configuration of line 337 and to effect an appropriate repair during the 1999 refueling outage.

Should you or your staff have any questions regarding this matter, please contact Mr. Charles W. Jackson, Manager, Nuclear Safety & Licensing.

Very truly yours,

Attachments

C: Mr. Hubert J. Miller
Regional Administrator - Region I
US Nuclear Regulatory Commission
475 Allendale Road
King of Prussia, PA 19406

Mr. Jefferey Harold, Project Manager
Project Directorate I-1
Division of Reactor Projects I/II
US Nuclear Regulatory Commission
Mail Stop 14B-2
Washington, DC 20555

Senior Resident Inspector
US Nuclear Regulatory Commission
PO Box 38
Buchanan, NY 10511

ATTACHMENT 1

APPLICABLE 1989 ASME CODE SECTIONS

Consolidated Edison Company of New York, Inc.
Indian Point Unit No. 2
Docket No. 50-247
August 1998

RELEVANT CONDITION ON LINE NO. 357
PER ASME 1989 CODE, SECTION XI

A. Applicable Code Sections

The requirements of the ASME Boiler and Pressure Vessel Code, Section XI, 1989 Edition without Addenda, apply as follows:

1. IWC-3516 (Standards for Examination Category C-H, All Pressure Retaining Components): "The standards of IWB-3522 may be applied."

   The referenced standard follows.

2. IWB-3522 (Standards for Examination Category B-P, All Pressure Retaining Components): "The following relevant conditions that may be detected during the conduct of system pressure tests shall require correction to meet the requirements of IWB-3142 and IWA-5250 prior to continued service. (a) leakage from non-insulated components (IWA-5241); (e) discoloration or accumulated residues on surfaces of components, insulation, or floor areas that may be evidence of borated water leakage [IWA-5242(c)]." Footnote 9 states; "The leakage is the through-wall leakage that penetrates the pressure retaining membrane."

   The area has been observed for leakage without a drop in fifteen minutes noted. We have conservatively assumed, for evaluation purposes, a 1 cc. per hour leak. Therefore, a relevant condition is applicable to this Class 2 component follows. IWA-5250 is discussed in item 8.

3 IWC-3132 (Acceptance); IWC-3132(b): "Components whose examination reveals relevant conditions described in the standards of Table IWC-3410-1 [which references IWC-3516 for C-H components] shall be unacceptable for continued service unless such components meet the requirement of ...IWC-3132.3."

   The referenced standard follows.

4. IWC-3132.3 (Acceptance by Evaluation): "Components containing relevant conditions shall be acceptable for continued service if an evaluation demonstrates the component's acceptability. The evaluation analysis and evaluation acceptance criteria shall be specified by the Owner. Components accepted for continued service based on evaluation shall be subsequently examined in accordance with IWC-2420(b) and (c)."

   An evaluation (Attachment 3) was performed which demonstrates that the piping component with the observed relevant conditions for both normal and abnormal conditions. Further, although not required for operability, a clamp has been installed to restrict its movement in the unlikely event of a complete failure.

5. IWC-2420 (Successive Inspections): "(b) If component examination results require evaluation of flaw indications in accordance with IWC-3000, and the component qualifies as conditionally acceptable for continued service, the areas containing such flaw indications or relevant conditions shall be reexamined during the next inspection period listed in the schedules of the inspection programs IWC-2411 or IWC-2412. (c) If the reexaminations required by (b) above reveal that the flaw indications remain essentially unchanged for the next inspection period, the component examination schedule may revert to the original schedule of successive inspections."

6. IWC-3134 (Review by Authorities): "(b) Evaluation analyses of examination results as required by IWC-3132.3 shall be submitted to the regulatory authority have jurisdiction at the plant site."

   The evaluation is provided in Attachment 3.

7. IWC-3200 (Supplemental Examinations): (b) Visual examinations that reveal relevant conditions shall be supplemented by other examinations (IWA-2220, IWA-2230, or IWA-2240) to determine the need for corrective measures, repairs, evaluation, or replacement.

   IWA-2220 (Surface Examination) permits a magnetic particle (in accordance with Article 7 of Section V) or a liquid penetrant (in accordance with Article 6 of Section V) examination. Results of the liquid penetrant examination performed are included as Attachment 2. IWA-2230 (Volumetric Examination) permits radiographic (as specified in Article 2 of Section V), ultrasonic (in accordance with Appendix I), or eddy current examination (in accordance with the provisions of Appendix IV). Results of the ultrasonic examination performed on the pipe in the vicinity of the relevant condition are included in Attachment 2. IWA-2240 (Alternative Examinations) permits other examination methods but none were performed on July 30 - 31. After visual examination revealed the relevant condition, further surface and volumetric examinations were performed. The results substantiate the evaluation that was performed and confirm that repair is not necessary at this time.

8. IWA-5250 (Corrective Measures): "(b) If boric acid residues are detected on components, the leakage source and the areas of general corrosion shall be located. Components with local areas of general corrosion that reduce the wall thickness by more than 10% shall be evaluated to determine whether the component may be acceptable for continued service, or whether repair or replacement is required."

   Although there is evidence of leakage and boron residue on the pipe, there is no indication of corrosion and ultrasonic digital thickness measurements of the pipe indicate no general wastage. For the piping, a 10% reduction of a nominal wall thickness of 0.140 inches would allow a wall thickness of 0.126 inches. The lowest reading obtained was 0.127 inches (spot indication).

ATTACHMENT 2

NDE EXAMINATION RESULTS

Consolidated Edison Company of New York, Inc.
Indian Point Unit No. 2
Docket No. 50-247
August 1998

QA7102 Rev. 7
Exhibit I

CONSOLIDATED EDISON COMPANY OF NEW YORK
QUALITY ASSURANCE DEPARTMENT

LIQUID PENETRANT EXAMINATION REPORT

Work Order No. 98-02880 Drawing No. N/A Location 51' Pipe Pen

Job Title 1½" RHR LINE System RHR

PENETRANT MATERIAL	REQUIREMENTS
Brand Magnaflux Type Batch	Applicable Code: ASME Sect. V
Penetrant: SKL-SP- 95M10K 007207	Acceptance Standard: NB-5350
Cleaner: SKC-NF- 95M12K 026589	Procedure: QA-7102 Rev. 7
Developer: SKD-S2 97A08K 00156	Technique Number #1 Solvent Removal.
Surface Temperature within 60° to 125° (✓) Yes ( ) No	Component Pipe SS
Thermometer Ser. No.:	Surface Condition: Pipe surface.

Identify area examined with or without sketch. Report all relevant indications.

* It appears that indication is from a pre existing arc strike. No water is bleeding from the indication
There is no cracking between pin holes A & B.

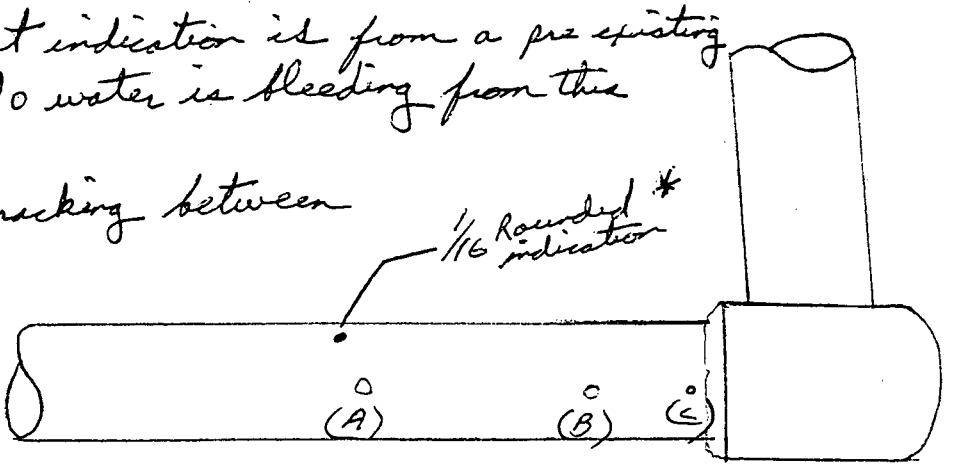

NOTE:

Disposition ( ) Accepted (✓) Rejected

Performed By: [signature] Level: III Date: 7/31/98

Assisted By: _____ Level: _____ Date: _____

INDIAN POINT STATION
CON EDISON
QUALITY ASSURANCE

ULTRASONIC THICKNESS MEASUREMENT RECORD

DATE: 7-30-98

WORK ORDER: 98-02880

COMPONENT: 1½" LINE AT VA-1819

SYSTEM: RHR LINE 337

LOCATION: PIPE PEN

MATERIAL: S/S

INSTRUMENT: PANA. 26 DL PLUS SN 92064205 DUE 1-21-99

PROCEDURE: QA 9001

TYPE/SIZE TRANSDUCER: D795 / 1.200 5 MHZ 39416

VELOCITY: 7270

CALIBRATION BLOCK: MINIMUM 0.050 MAXIMUM 0.750

TYPE COUPLANT: EXOSEN 30

LEAK #1

140	140	140	140	141	142
140	140	140	140	141	142
143	142	139	138	140	142
143	142	142	138	140	142
142	142	145	138	140	142
142	142	147	142	140	142

FLOW

LEAK #2

142	142	142	143		
140	140	140	143		
139	139	142	143		
139	139	142	143		
140	138	140	142		
140	138	140	142		

FLOW

EAST

½" 3" TYP.

LEAK #3

139	140	140	141	141	141
139	140	140	141	141	141
140	136	139	139	139	141
140	136	139	139	139	141
141	139	140	141	141	141
141	139	140	142	141	142

FLOW

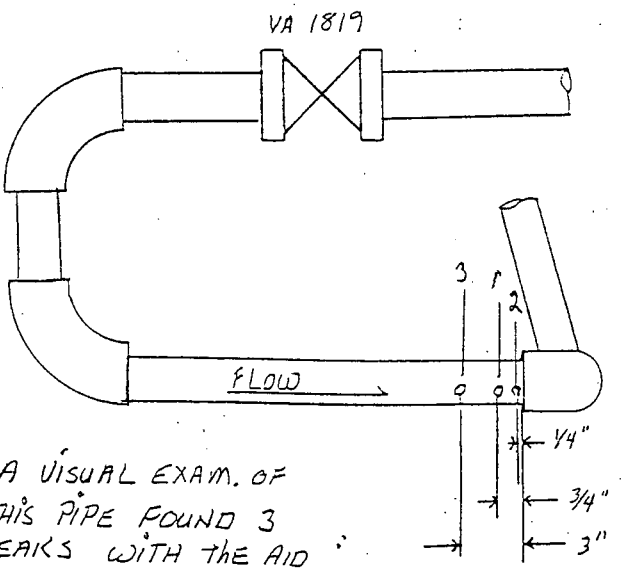

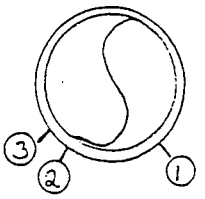

VIEW LOOKING DOWN STREAM

Note: A VISUAL EXAM. OF THIS PIPE FOUND 3 LEAKS WITH THE AID OF PENETANT DEVELOPER.

PERFORMED BY: [signature] LEVEL II L

ASSISTED BY: [signature] II L

INDIAN POINT STATION
CON EDISON
QUALITY ASSURANCE

ULTRASONIC THICKNESS MEASUREMENT RECORD

DATE: 7-30-98

WORK ORDER: 98- 02880

COMPONENT: 1½ LINE AT V-1819

SYSTEM: RHR LINE 337

LOCATION: PIPE PEN.

MATERIAL: S/S

INSTRUMENT: PANA. 260L PLUS S/N. 92064205 DUE 1-21-99

PROCEDURE: QA 9001

TYPE/SIZE TRANSDUCER: D795 1.200" 5 MHz 39416

VELOCITY: 2277

CALIBRATION BLOCK: MINIMUM 0.050 MAXIMUM 0.750

TYPE COUPLANT: EXOSEN 30

	TOP	SIDE	BOT	SIDE
1	.130	.155	.171	.142
2	.129	.149	.174	.160
3	.127	.158	.175	.138
4	.124	.159	.177	.147
5	.143	.142	.140	.138
6	.139	.140	.142	.139
7	.146	.142	.144	.138
8	.141	.143	.140	.139
9	.140	.139	.140	.140
10	.288	.298	.309	.281
11	.282	.313	.285	.281
12	.176	.161	.131	.156
13	.178	.158	.132	.161

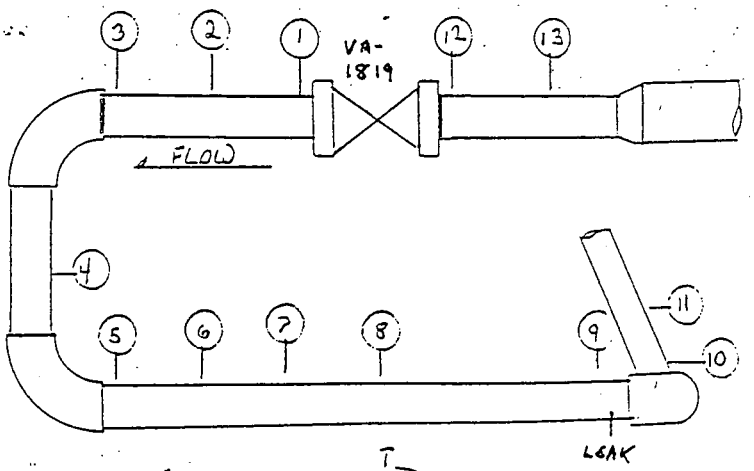

NOTE: AREA 9 - VISUAL EXAM FOUND PIN: HOLE LEAK. READINGS IN AREA WERE ALL AROUND .140"

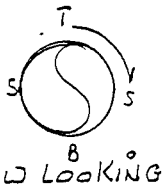

VIEW LOOKING DOWN STREAM

PERFORMED BY: [signature] / R. Frombetta II L LEVEL II T

ASSISTED BY:

ATTACHMENT 3

EVALUATION OF FLAWS FOUND ON RHR LINE # 337

Consolidated Edison Company of New York, Inc.
Indian Point Unit No. 2
Docket No. 50-247
August 1998