MITSUBISHI HEAVY INDUSTRIES, LTD.
16-5, KONAN 2-CHOME, MINATO-KU
TOKYO, JAPAN

February 4, 2010

Document Control Desk
U.S. Nuclear Regulatory Commission
Washington, DC 20555-0001

Attention: Mr. Jeffery A. Ciocco

Docket No. 52-021
MHI Ref: UAP-HF-10032

Subject: MHI's Responses to US-APWR DCD RAI No. 496-3735

Reference: 1) "Request for Additional Information No. 496-3735 Revision 0, SRP Section: 03.08.05 - Foundations," dated 12/01/2009.

With this letter, Mitsubishi Heavy Industries, Ltd. ("MHI") transmits to the U.S. Nuclear Regulatory Commission ("NRC") a document entitled "Responses to Request for Additional Information No. 496-3735, Revision 0."

Enclosed are the responses to 13 RAIs contained within Reference 1. This transmittal completes the response to this RAI.

Please contact Dr. C. Keith Paulson, Senior Technical Manager, Mitsubishi Nuclear Energy Systems, Inc. if the NRC has questions concerning any aspect of this submittal. His contact information is provided below.

Sincerely,

Y. Ogata

Yoshiki Ogata,
General Manager- APWR Promoting Department
Mitsubishi Heavy Industries, LTD.

Enclosure:

1. Response to Request for Additional Information No. 496-3735, Revision 0

CC: J. A. Ciocco
C. K. Paulson

Contact Information
C. Keith Paulson, Senior Technical Manager
Mitsubishi Nuclear Energy Systems, Inc.
300 Oxford Drive, Suite 301
Monroeville, PA 15146
E-mail: ck_paulson@mnes-us.com
Telephone: (412) 373-6466

D081
NRO

Enclosure 1

UAP-HF-10032
Docket No. 52-021

Response to Request for Additional Information No. 496-3735,
Revision 0

February, 2010

RESPONSE TO REQUEST FOR ADDITIONAL INFORMATION

2/4/2010

US-APWR Design Certification

Mitsubishi Heavy Industries

Docket No. 52-021

RAI NO.:	**NO. 496-3735 REVISION 0**
SRP SECTION:	**03.08.05 - Foundations**
APPLICATION SECTION:	**3.8.5**
DATE OF RAI ISSUE:	**12/01/2009**

QUESTION NO. RAI 03.08.05-23:

This Request for Additional Information was written based on Revision 1 of the DCD.

In its response to Question 3.8.5-1 (of RAI 340-2004 hereinafter unless indicated otherwise), MHI states that the reactor building (R/B) complex basemat is not perfectly rectangular over its entire depth. They explain that the FE models shown in the DCD are cross sections of the basemat at different elevations and they are correct as shown. MHI will revise the DCD to clarify this issue.

The applicant is requested to provide the following information:

1. In evaluating this response, the staff notes that MHI stated that Figure 3.8.5-5 and Figure 3.8.5-6 are cross sections of the R/B basemat taken at different elevations. This statement is confusing because Figure 3.8.5-6 is a 3-D finite element model of the basemat not a 2-D cross section view. The applicant is requested to change the figure caption if Figure 3.8.5-5 is not a cross section of Figure 3.8.5-6.

With regard to the design of the basemat, MHI is requested to provide a rationale for not maintaining the rectangular shape over its entire depth. As it is shown in the standard plant design, the corners at the notches are discontinuities and are more likely to crack. MHI is also requested to provide the coordinates of the mass center of the structures supported on the basemat including the mass of the basemat.

Reference: MHI response to RAI 340-2004, dated 7/3/2009, MHI Ref: UAP-HF-09363, ML091900557.

ANSWER:

Figure 3.8.5-5 is a plan view and not a cross section. The caption for Figure 3.8.5-5 does not indicate that it is a cross section. No change to the figure caption for Figure 3.8.5-5 is required.

As noted by the NRC staff, the view in Figure 3.8.5-6 is that of the 3-D finite element model for the basemat, and not a 2-D cross section view.

With regard to the design of the basemat, MHI in their response to RAI 340-2004 Question 03.08.05-07(c) made the shape of the R/B more regular in shape over its entire depth. This was achieved by eliminating the "dent" in the foundation beneath the PCCV area by filling with concrete and by "boxing out" the area underneath the fuel handling area on the north side of the R/B. This change was incorporated into DCD Revision 2 and will mitigate concerns due to discontinuities with respect to bearing on the subgrade as well as cracking. These changes will affect the mass and mass center of the basemat. The revised model used for seismic analyses of the revised R/B building configuration will be presented in an interim technical report that is scheduled to be issued in February 2010, which will also present the coordinates of the mass centers of the basemat and the structures supported on it. The results of the seismic response analyses of the revised model will be provided in the revised technical report MUAP-08005.

The changes in the R/B geometry (including the coordinates of the mass centers of basemat and the structures supported on it) and the changes in the seismic analysis and structural design will be incorporated into a future revision of the DCD.

Impact on DCD

There is no impact on the DCD.

Impact on COLA

There is no impact on the COLA.

Impact on PRA

There is no impact on the PRA.

RESPONSE TO REQUEST FOR ADDITIONAL INFORMATION

2/4/2010

US-APWR Design Certification

Mitsubishi Heavy Industries

Docket No. 52-021

RAI NO.:	**NO. 496-3735 REVISION 0**
SRP SECTION:	**03.08.05 - Foundations**
APPLICATION SECTION:	**3.8.5**
DATE OF RAI ISSUE:	**12/01/2009**

QUESTION NO. RAI 03.08.05-24:

In their response to Question 3.8.5-2, MHI states that they have used four generic subgrade conditions for the standard plant, and that this meets the intent of ASCE 4-98. In addition, MHI states that in DCD, Subsection 3.7.2.4.1 the COL Applicant is required to perform a site-specific soil-structure interaction (SSI) analysis that considers the best estimate, upper bound, and lower bound cases.

The staff notices that in the response, MHI states that the use of shear wave velocities ranging from 1000 ft/s to 8000 ft/s captures the uncertainties in soil properties and in the SSI analysis by intent. If this is what the applicant claims, the applicant is requested to change the DCD to "The standard plant design considers only one subgrade with the shear wave velocity ranging from 1000 ft/s to 8000 ft/s." If, however, the applicant wants to claim that four subgrade types are considered in their approach, then uncertainties in soil properties need to be assessed for each subgrade type.

Reference: MHI response to RAI 340-2004, dated 7/3/2009, MHI Ref: UAP-HF-09363, ML091900557.

ANSWER:

The site-independent seismic design of the US-APWR standard plant will be revised, and a set of seismic response analyses will be performed considering a set of generic soil profiles that will include different variations of the subgrade layering and will employ methodology that addresses the frequency-dependence of the soil structure interaction. The generic soil profiles will be developed considering a wide range of generic site conditions from deep soft soil to firm rock that may exist across central and eastern North America (CENA). The initial profile development recognizes that for the softer conditions, the shallow materials would be either removed or improved for appropriate foundation conditions.

Considering a wide set of profiles, a subset of 9 profiles are selected that will represent, with respect to SSI analysis, the variations that may be reasonably anticipated at CENA sites. Strain

compatible properties, shear- and compressional-wave velocities and corresponding hysteretic damping values, will be developed for this subset of profiles and basement depths that are consistent with the MHI CSDRS.

The details regarding the selection of the generic layered subgrade profiles will be summarized in an interim technical report scheduled to be issued in February 2010 which will be used as the basis for updating the DCD discussion of generic subgrade properties in a future DCD revision, including but not limited to Chapter 2 Table 2.0-1 and the discussions in Subsections 3.7.2.2, 3.7.2.4, 3.7.2.5, 3.7.2.9, and 3.8.5.4.1 and related tables, figures, and appendices.

Impact on DCD

There is no impact on the DCD.

Impact on COLA

There is no impact on the COLA.

Impact on PRA

There is no impact on the PRA.

RESPONSE TO REQUEST FOR ADDITIONAL INFORMATION

2/4/2010

US-APWR Design Certification

Mitsubishi Heavy Industries

Docket No. 52-021

RAI NO.:	**NO. 496-3735 REVISION 0**
SRP SECTION:	**03.08.05 - Foundations**
APPLICATION SECTION:	**3.8.5**
DATE OF RAI ISSUE:	**12/01/2009**

QUESTION NO. RAI 03.08.05-25:

In its response to Question 3.8.5-4, MHI states that the US-APWR standard plant design considers four generic subgrade conditions for the seismic design. Further, variations in dynamic properties and effects of non-linearity are to be determined on a site-specific basis by the COL Applicant. A description of the models used is provided in the response, along with a discussion of their use of soil degradation curves, and how nonlinearity is treated. MHI explains in the response how dynamic properties of site-specific subgrade materials are obtained, citing the use of soil degradation curves for typical material published in open literature.

The applicant is requested to provide the following information:

1. In reviewing Part (a) of the response, the staff notes that MHI states that it is conservative to neglect the effect of the soil material damping. This position is not in compliance with SRP 3.7.2 II.4.C. The effect of soil material damping will lower the fundamental frequency of the soil-structure system. Depending on the fixed-based frequency of the structure, this frequency shift may increase or decrease the structural response. Hence, neglecting this effect may not be "conservative". MHI is requested to provide data to support their claim that it is conservative to neglect soil material damping.

In Part (b) of the response, MHI did not specify the values of C_v used in US-APWR standard plant design. MHI is requested to provide this information.

Reference: MHI response to RAI 340-2004, dated 7/3/2009, MHI Ref: UAP-HF-09363, ML091900557.

ANSWER:

A set of generic soil profiles will be developed to represent a wide range of candidate sites within continental USA that will consider the variations of the subgrade properties and layering. The values of stiffness and damping (including soil material damping) for the subgrade materials in the generic profiles, to be used as input for the seismic response analyses of the US-APWR standard plant, will be compatible to the strains generated by the design ground motion input defined by the US-APWR CSDRS. Consideration of 9 candidate sites results in a broad range of shear modulus values, which meets the intent of SRP 3.7.2 Acceptance Criterion II.4 with respect to the C_v for the subgrade shear modulus. Details about the development of the generic layered subgrade profiles will be summarized in an interim technical report scheduled to be issued in February 2010, as stated in the response to Question 03.08.05-24. The interim technical report will be used as the basis for updating the DCD discussion of generic subgrade properties in a future DCD revision, including but not limited to Chapter 2 Table 2.0-1 and the discussions in Subsections 3.7.2.2, 3.7.2.4, 3.7.2.5, 3.7.2.9, and 3.8.5.4.1 and related tables, figures, and appendices.

Impact on DCD

See Attachment 3 for the mark-up of DCD Tier 2, Section 3.8, changes to be incorporated.

- Delete the second sentence of the third paragraph in Subsection 3.8.5.4.1 which states that: "The dissipation of energy in the subgrade media due to the soil material damping is conservatively neglected."

Impact on COLA

There is no impact on the COLA.

Impact on PRA

There is no impact on the PRA.

RESPONSE TO REQUEST FOR ADDITIONAL INFORMATION

2/4/2010

US-APWR Design Certification

Mitsubishi Heavy Industries

Docket No. 52-021

RAI NO.:	**NO. 496-3735 REVISION 0**
SRP SECTION:	**03.08.05 - Foundations**
APPLICATION SECTION:	**3.8.5**
DATE OF RAI ISSUE:	**12/01/2009**

QUESTION NO. RAI 03.08.05-26:

In its response to Part (a) of Question 3.8.5-5, MHI states that they will revise the DCD to reflect changes made to the DCD, Tier 1, Table 2.1-1, and DCD Tier 2, Table 2.0-1 in accordance with open item RGS 1.2.5.4. A discussion is presented in the response concerning the minimum allowable bearing capacity and the minimum allowable dynamic bearing capacity, including some specific values for the standard plant. For Part (b) MHI explains the choice of 60 ksf for the minimum allowable dynamic bearing pressure. For Part (c) MHI refers to their response to Part (a) above. For Part (d) the response includes the combinations of the seismic responses in three directions of the earthquake. A table is included that summarizes the results from the various load combinations considered, and identifies the critical load combinations. MHI will clarify the choices of allowable static and dynamic bearing pressures.

The applicant is requested to provide the following information:

1. For Part (a) of the response, MHI replaced the terms "average static bearing capacity" and "average dynamic bearing capacity" with "minimum allowable static bearing capacity" and "minimum allowable dynamic bearing capacity", respectively. The staff considers these changes acceptable. MHI further stated that the minimum allowable static bearing pressure is 15 ksf and the minimum allowable dynamic bearing capacity is 60 ksf. These two values were based on the calculated values of 11.3 ksf for the static case and 53 ksf for the dynamic case. The staff calculates the safety factors associated with these two cases as 1.3 for the static case, and 1.1 for the dynamic case. The applicant is requested to provide the technical rationale and justification for choosing these safety factors.

In Part (d) of the response, MHI used the Highter and Anders equation provided in Section 3.12 of Principle of Foundation Engineering, 6th edition to compute the effective contact area. The staff finds that the Highter and Anders equation is not well-known. The applicant is requested to provide additional technical information to verify the accuracy of the calculations. Was the Highter and Anders equation used to calculate any response quantities that were used in design?

Reference: MHI response to RAI 340-2004, dated 7/3/2009, MHI Ref: UAP-HF-09363, ML091900557.

ANSWER:

(a) With respect to part (a) of the previous response to Question 03.08.05-5 of RAI 340-2004, the required minimum allowable static bearing capacity and the required minimum dynamic bearing capacity for the standard plant were identified as 15 ksf and 60 ksf, respectively. These values were obtained by conservatively rounding up the computed static and dynamic bearing pressures of 11.3 ksf and 53 ksf, respectively. These values are the minimum required values for allowable bearing capacities, and therefore these values do not imply that the factors of safety for static and dynamic bearing should be 1.3 and 1.1, respectively. As discussed in the response to RAI 494-3978 Question RAI 03.07.01-2, the minimum ultimate bearing capacity is the value required to provide a reasonable factor of safety above the minimum allowable bearing capacity. Stated otherwise, the factor of safety is that value which assures a reasonable margin of safety of the ultimate bearing capacity versus the applied bearing pressure.

The response to Open Item RGS1 2.5.4 (UAP-HF-09321), related to RAI 02.05.04-1, stated that the COL Applicant demonstrates adequate safety factors for bearing capacity by comparing the required allowable bearing pressures with the ultimate bearing capacity of the site. The value for ultimate bearing capacity may be governed by settlement, which would be dominated by static bearing pressures, or by shear failure of the soil/subgrade. The ultimate bearing capacity of the soil/subgrade is to be determined on a site-specific basis and compared to the minimum allowable bearing capacity values presented in DCD Table 2.0-1. The required factor of safety for bearing is best determined on a site-specific basis because it is largely dependent on the complexity of the subgrade conditions and behavior for each site, and depends on the uncertainties associated with determining and characterizing the subgrade conditions at a particular site.

Refer to the response to Open Item RGS1 2.5.4 for further explanation of how static bearing pressures and dynamic bearing pressures and corresponding soil capacities will be used in the plant design.

(b) The Highter and Anders equations that are provided in Section 3.12 of Principles of Foundation Engineering, 6th Edition, Braja M. Das, Thomson Engineering, 2006 were not used to calculate any response quantities that served as input for the design. The equations were only used as a guide to select the load combinations and generic soil condition that yield the most critical results for the maximum dynamic bearing pressures. Using the Highter and Anders equations to hand calculate the average dynamic bearing pressure acting on the effective contact area of the uplifted foundation, two critical cases were selected for finite element analyses of the uplift foundation. The results of the uplift foundation analyses provided the value of the maximum dynamic bearing pressure.

Impact on DCD

There is no impact on the DCD.

Impact on COLA

There is no impact on the COLA.

Impact on PRA

There is no impact on the PRA.

RESPONSE TO REQUEST FOR ADDITIONAL INFORMATION

2/4/2010

US-APWR Design Certification

Mitsubishi Heavy Industries

Docket No. 52-021

RAI NO.:	**NO. 496-3735 REVISION 0**
SRP SECTION:	**03.08.05 - Foundations**
APPLICATION SECTION:	**3.8.5**
DATE OF RAI ISSUE:	**12/01/2009**

QUESTION NO. RAI 03.08.05-27:

In its response to Question 3.8.5-6, MHI explains the shell elements used in the three-dimensional FE models, including a figure that shows the types and locations of elements used.

In reviewing the response, the staff finds that MHI did not provide enough information for the staff to perform an evaluation of the response. The applicant is requested to provide additional information such as how the degree-of-freedoms of these elements (shell, brick, and rigid elements) are matched to each other shown in the left figure of Figure 1 in the response, and how the shell elements are connected to the brick elements in the right figure of Figure 1. MHI is also requested to provide technical information that verifies that the stresses and displacements are continuous through the shell to brick connections.

Reference: MHI response to RAI 340-2004, dated 7/3/2009, MHI Ref: UAP-HF-09363, ML091900557.

ANSWER:

The rigid elements used in the model couple the motion of the nodes they connect in all six degrees of freedom. In Figure 1 in the response to RAI 340-2004 Question RAI 03.08.05-06, the shell elements modeling the walls of the building are extended into the layer of solid elements to transmit nodal rotations to the solid elements. The extended elements have identical stiffness as the wall and share the nodes with the corresponding face of the solid elements, but have no mass density assigned to them. This ensures that the stresses and displacements are continuous through the shell to brick connections.

Impact on DCD

There is no impact on the DCD.

Impact on COLA

There is no impact on the COLA.

Impact on PRA

There is no impact on the PRA.

RESPONSE TO REQUEST FOR ADDITIONAL INFORMATION

2/4/2010

US-APWR Design Certification

Mitsubishi Heavy Industries

Docket No. 52-021

RAI NO.:	**NO. 496-3735 REVISION 0**
SRP SECTION:	**03.08.05 - Foundations**
APPLICATION SECTION:	**3.8.5**
DATE OF RAI ISSUE:	**12/01/2009**

QUESTION NO. RAI 03.08.05-28:

In its response to question 3.8.5-7, MHI points out that a similar topic was addressed in their response to Question 3.8.1-5 of RAI 223-1996. For Part (a) of the question MHI describes how the vertical and horizontal spring constants are calculated, including tables to show the resulting values. For Part (b) MHI states that there are two horizontal springs for each node. For Part (c) MHI states that it is not necessary to consider the boundary conditions at the "dent" (the area below the central region of the PCCV) in the bottom of the R/B, PCCV basemat because it will be filled with concrete, not soil. The applicant is requested to provide the following information:

1. For Part (a) of the response, MHI indicated that the soil spring constants are calculated based on the equations given in American Society of Civil Engineers (ASCE) 4-98. ASCE 4-98 provides two sets of equations for calculating the soil spring constants, one for circular foundation and the other for rectangular foundation. The outer shape of the common basemat for the R/B, PCCV and internal structures is approximately a rectangle. However, the elevation of the bottom of the central region of the common basemat is about 10 feet above that of the peripheral portion of the basemat. For this annular foundation shape, the soil spring constants calculated based on ASCE 4-98 may not be adequate. The staff has not reviewed and endorsed ASCE 4-98 for this application. MHI is requested to validate the applicability of ASCE 4-98 equations for the common basemat. Also, per SRP 3.7.2 II.4, the frequency variation of the soil spring constants needs to be considered. MHI is requested to show that the frequency variation is not important in order to use frequency independent soil spring constants. In MHI's response, Table 1 in the response presents soil spring constants for the FE model. In this table, the area of basemat at its bottom, is A, and the geometrical moment of inertia at basemat, J, appears to consider the whole basemat area including the central dented region. MHI is requested to provide justification for including the central region ("dent") as part of the basemat since it is a filled volume not part of the structural basemat. The soil spring constants per unit area presented in Table 1 are considered to lack sound theoretical background because these per unit area soil spring constants do not reproduce the theoretical distribution of the soil pressure for a uniform displacement of the foundation. Finally, specified in Table 2.0-1 of the DCD, the water table is at 1 foot below the nominal plant grade. The applicant is requested to provide data that shows the effect of this high water table on the calculation of the soil spring constants.

MHI's response for Part (c) is acceptable. However, the applicant is requested to state explicitly in the DCD that the dent in the central region of the basemat bottom is filled with concrete.

References:

MHI response to RAI 340-2004, dated 7/3/2009, MHI Ref: UAP-HF-09363, ML091900557

MHI response to RAI 223-1996, dated 4/14/2009, MHI Ref: UAP-HF-09161, ML091060749

ANSWER:

NRC questions are repeated below in italics and answered separately:

Question 03.08.05-28(a)1:

For Part (a) of the response, MHI indicated that the soil spring constants are calculated based on the equations given in American Society of Civil Engineers (ASCE) 4-98. ASCE 4-98 provides two sets of equations for calculating the soil spring constants, one for circular foundation and the other for rectangular foundation. The outer shape of the common basemat for the R/B, PCCV and internal structures is approximately a rectangle. However, the elevation of the bottom of the central region of the common basemat is about 10 feet above that of the peripheral portion of the basemat. For this annular foundation shape, the soil spring constants calculated based on ASCE 4-98 may not be adequate. The staff has not reviewed and endorsed ASCE 4-98 for this application. MHI is requested to validate the applicability of ASCE 4-98 equations for the common basemat.

Answer:

The R/B configuration has been modified such that the dent no longer exists, that area becomes part of the structural basemat, and the resulting base of the foundation (that interacts with soil) is flat and corresponds to an approximate rectangular foundation. This is shown on revised Figures 3.8.5-2 through 3.8.5-4 in DCD Revision 2 and Figure 3.J-1 (Sheets 13 & 14 of 14) in Appendix J of DCD Revision 2.

Question 03.08.05-28(a)2:

Also, per SRP 3.7.2 II.4, the frequency variation of the soil spring constants needs to be considered. MHI is requested to show that the frequency variation is not important in order to use frequency independent soil spring constants.

Answer:

The soil spring stiffness will be determined as described in MHI's answer to question 03.08.01-5, Part 2b. The method uses the soil deformation modulus as a main parameter. The dependency of spring stiffness on frequency is directly related to frequency dependency of the soil deformation modulus. In order to address frequency-dependence of the soil deformation modulus, a very wide range of moduli is used to calculate the envelope of the structural response. The range of moduli will be based on the generic soil profiles that will be considered in the DCD as discussed in the response to Question 03.08.05-24 of this RAI. The frequency dependency of the soil spring constants will also be considered for site-specific calculations. A frequency-dependent soil deformation modulus will be inferred for the range of frequencies considered relevant for the

calculations, based on back-analysis of the SASSI results. This modulus will be used to calculate frequency dependent spring stiffness used in pseudo-static analysis and design of structures. The information of soil deformation modulus for the standard plant will be available in April 2010.

Question 03.08.05-28(a)3:

In MHI's response, Table 1 in the response presents soil spring constants for the FE model. In this table, the area of basemat at its bottom, is A, and the geometrical moment of inertia at basemat, J, appears to consider the whole basemat area including the central dented region. MHI is requested to provide justification for including the central region ("dent") as part of the basemat since it is a filled volume not part of the structural basemat.

Answer:

As the dent is filled with concrete and becomes part of the structural basemat, the base of the foundation is flat for the purpose of soil-structure interaction, and A and J correspond to the whole basemat area. See response in 28(a)1 above for reference drawings (Figures) in the DCD.

Question 03.08.05-28(a)4:

The soil spring constants per unit area presented in Table 1 are considered to lack sound theoretical background because these per unit area soil spring constants do not reproduce the theoretical distribution of the soil pressure for a uniform displacement of the foundation.

Answer:

This limitation of the model will be corrected as explained in MHI's answer to question 03.08.01-5, Part 2b.

Question 03.08.05-28(a)5:

Finally, specified in Table 2.0-1 of the DCD, the water table is at 1 foot below the nominal plant grade. The applicant is requested to provide data that shows the effect of this high water table on the calculation of the soil spring constants.

Answer:

Presence of groundwater affects the normal effective stresses in soil, and therefore the frictional shear strength of soil materials. As explained in MHI's answer to question 03.08.01-5, Part 2b, considering soil with cohesive shear strength when inferring soil spring stiffness results in more conservative values for structural stresses. Therefore, only cohesive soil materials will be considered when calculating soil spring stiffness for DCD calculations, and the groundwater level will not affect the spring stiffness. For site specific calculations, on the other hand, the effect of groundwater level will be considered for the case of soil materials with frictional strength. The frictional strength at the edge of the foundation will be affected by the groundwater level. This frictional strength is used to calculate the limiting pressure used in redistributing contact pressures resulting from the Theory of Elasticity (as shown in Figure A5 of MHIs response to question 03.08.01-5, Part 2b).

Question 03.08.05-28(c):

MHI's response for Part (c) is acceptable. However, the applicant is requested to state explicitly in the DCD that the dent in the central region of the basemat bottom is filled with concrete.

Answer:

As stated in the responses in 3.8.5-28(a)1 and 3.8.5-28(a)3 above, the dent is filled with concrete and becomes part of the structural basemat. This is shown in the reference drawings (Figures) in the response to 3.8.5-28(a)1 above and in Figures 3.8.5-11 and 3.8.5-12 of DCD Revision 2.

Impact on DCD

There is no impact on the DCD.

Impact on COLA

There is no impact on the COLA.

Impact on PRA

There is no impact on the PRA.

RESPONSE TO REQUEST FOR ADDITIONAL INFORMATION

2/4/2010

US-APWR Design Certification

Mitsubishi Heavy Industries

Docket No. 52-021

RAI NO.:	**NO. 496-3735 REVISION 0**
SRP SECTION:	**03.08.05 - Foundations**
APPLICATION SECTION:	**3.8.5**
DATE OF RAI ISSUE:	**12/01/2009**

QUESTION NO. RAI 03.08.05-29:

In its response to Question 3.8.5-8, MHI describes how the soil springs of the FE model are calculated. It is pointed out that for the case of uplift the soil springs in tension are cut off, and the remaining spring constants modified according to the uplift area. MHI states that there is no inconsistency between the two models.

In the response, MHI states that "The soil springs of the FE model are calculated by distributing the soil springs of the three dimensional lump-mass stick model to each node corresponding to the subjected area of each node." The staff finds that this approach is not acceptable because the distributed soil springs do not reproduce the soil pressure for a uniform foundation displacement. Furthermore, MHI states that "The sum of the remaining spring constant values are decreased accordingly corresponding to the uplifted area and the spring constants per unit area of the stick model and the FE model are the same." This statement is technically invalid because the spring constants per unit area of the stick model and those in the uplifted area of the FE model are not the same. The applicant is requested to justify the validity of the approach used above, taking into account the fact that the spring constants per unit area of the stick model are not the same as the spring constants for the uplifted area of the FE model.

Reference: MHI response to RAI 340-2004, dated 7/3/2009, MHI Ref: UAP-HF-09363, ML091900557.

ANSWER:

The NRC staff asked a similar question in RAI 490-3732 Question RAI 03.08.01-5.

Parts (a), (d), and (e) of the response to Question RAI 03.08.01-5 explain that the analysis approach that subgrade support springs with tension capacity will maximize the design forces and moments for the PCCV structure will be re-evaluated. If the approach is confirmed as valid, a future Technical Report that is currently scheduled to be issued in March 2010 will provide the results of the re-evaluation and any necessary back-up numerical data, including redistribution effects. Otherwise, the analysis approach will be appropriately revised and documented in a future revision of the DCD.

Impact on DCD

There is no impact on the DCD.

Impact on COLA

There is no impact on the COLA.

Impact on PRA

There is no impact on the PRA.

RESPONSE TO REQUEST FOR ADDITIONAL INFORMATION

2/4/2010

US-APWR Design Certification

Mitsubishi Heavy Industries

Docket No. 52-021

RAI NO.:	**NO. 496-3735 REVISION 0**
SRP SECTION:	**03.08.05 - Foundations**
APPLICATION SECTION:	**3.8.5**
DATE OF RAI ISSUE:	**12/01/2009**

QUESTION NO. RAI 03.08.05-30:

In its response to Part (a) of Question 3.8.5-9, MHI explains the intent of the wording in the DCD, and agrees that the last two sentences of the first paragraph in the DCD, Subsection 3.8.5.4.2 can be confusing. These sentences will be deleted in Revision 2 to the DCD. For Part (b) of the question MHI refers to their response to Question 3.7.2-13 of RAI 212-1950.

The staff finds the response for Part (a) to be acceptable.

For their response to Part (b) of the question MHI refers to their response to Question 3.7.2-13 of RAI 212-1950, Rev. 1 for the calculation of the horizontal forces. A review of this response to Question 3.7.2-13 was made. In that response, MHI presents a detailed description of how the lateral soil pressures are calculated and presents technical references to support their approach. However, for the US-APWR standard plant design, the water table is 1 ft below the nominal plant grade. So, for underground walls, the soil is submerged under water from 1 ft below the surface. The applicability of Wood's equation to calculate the dynamic soil pressure for the US-APWR standard plant is, therefore, questionable. The applicant is requested to provide numerical data to prove that the effect of water table is negligible and that Wood's equation can, in fact, be applied to the US-APWR standard plant. In the response to Question 3.7.2-13, MHI indicated that a paper by Veletsos and Younan demonstrated that Wood's solution was conservative. However, Veletsos and Younan's paper assumed $\sigma z=0$ (the vertical component of the stress tensor) in their study and this assumption is questionable for the case when the vertical component of the seismic motion is considered. In order to support the claim based on this paper, the applicant is requested to show that the conclusion of that paper is also valid if the vertical component of the seismic motion is included, and that the effect of high water table is considered. In addition, Wood's solution does not consider the earth pressure due to the rotation of the wall at its base. The applicant is requested to provide data to show that this pressure is negligible.

References:

MHI response to RAI 340-2004, dated 7/3/2009, MHI Ref: UAP-HF-09363, ML091900557

MHI response to RAI 212-1950, dated 3/30/2009, MHI Ref: UAP-HF-09113, ML090930727

ANSWER:

We interpret that the RAI has three (3) questions; e.g., 1) dynamic lateral earth pressure due the presence of water in backfill, 2) effects of vertical component of earthquake and 3) earth pressure created by base rotation. Each is answered below.

1) Dynamic Lateral Earth Pressure

The Staff's observation of limited applicability of Wood's study is acknowledged. It may be noted that in response to Question 3.7.2-13 of RAI No. 212-1950, Rev. 1, dynamic lateral earth pressures were calculated using total mass density of soil (γ_t) in Wood's solution.

The presence of water in the backfill has two effects on the seismic force: 1) it alters the inertial forces in the backfill and 2) it develops hydrodynamic force as noted above. The inertial force must be calculated using effective unit weight γ_e (67.6 pcf) and not γ_t (130 pcf) as was done in the design of the building wall (unyielding wall).

The hydrodynamic forces due to earthquake ground motion are equivalent to the inertia forces of a volume of water attached to the wall and moving back and forth with it, per Westergaard (1931). Westergaard showed that if the harmonic, horizontal motion applied at the base has a frequency lower than the fundamental frequency of the water mass upstream of the wall (i.e., $f_0 = v_p / 4H$, where v_p is the p-wave velocity of water and H is the depth of water in the backfill), then the hydrodynamic pressure amplitude increases with the square root of water depth. Note that v_p = 4700 ft/sec (approximately) and for a 20 ft depth of water in backfill the natural frequency = 58.75 Hz, well above the frequencies of interest for earthquake. The amplitude of hydrodynamic pressure is,

$$p_{wH} = 7/8\ (a_h/g)\ \gamma_w\ \sqrt{(Z_w H)}$$

Where:

a_h = horizontal seismic acceleration in g's
γ_w = mass density of water
Z_w = height of water mass, (see the figure)

The pressure distribution is a parabolic curve as shown below.
The resultant horizontal hydrodynamic thrust is given by

$$P_{wH} = 7/12\ (a_h/g)\ \gamma_w\ H^2 \qquad \text{(applied at 0.4H from the base)}$$

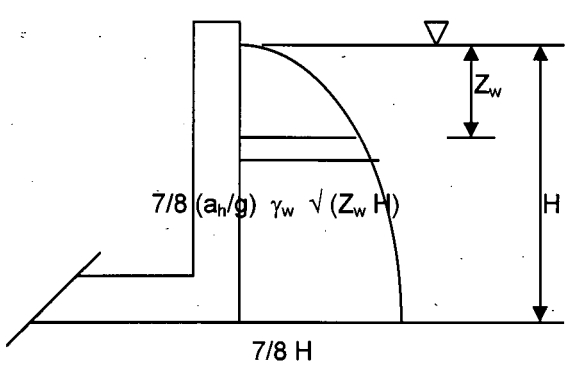

The total lateral pressure $P_{Total\ Horizontal}$ = Wood's pr. with γ_e + Westergaard's hydrodynamic pr. with γ_w.

2) <u>Earth Pressure due to Vertical Earthquake</u>

Additional water pressure and lateral soil pressure induced by the vertical earthquake alone can be computed as follows:

Water pressure $P = a_v/g \ \gamma_w Z_w$

Earth pressure = $K_0 a_v/g \ \gamma_e Z_w$

Where a_v is the vertical component of the earthquake motion in g's, and K_0 is at-rest coefficient of soil with the other variables as defined above.

The total pressure is calculated by combining the Wood's pressure with equivalent unit weight and Westergaard's hydrodynamic pressures using Newmark's (100 +40+40) percentages. The results are presented in the Table and Chart below.

	Wood's Solution	Horizontal kh=0.3				Adding 40% Vertical Earthquake, vertical seismic kv=0.3			
	Total Weight Method	Treat Soil and Water Separately				Treat Soil and Water Separately			
Depth	Y/H	Seismic Force	Pwdh	Fe	Pwd+Fe	Pwdu=0.3*62.4*H*40%	Fev=0.5*0.3*(130-62.4)*H*40%	Pwdh+Pwdu+Fev+Fe	SQRT(H,Y)
0	1	1625	0	845	845	0	0	845	845
7.766	0.8	1844	284	959	1243	58	31	1333	1282
15.532	0.6	1763	402	917	1319	116	63	1498	1427
23.298	0.4	1528	493	795	1287	174	94	1556	1487
31.064	0.2	1115	569	580	1149	233	126	1507	1473
38.83	0	427	636	222	858	291	157	1306	1418
							Ko=0.5		

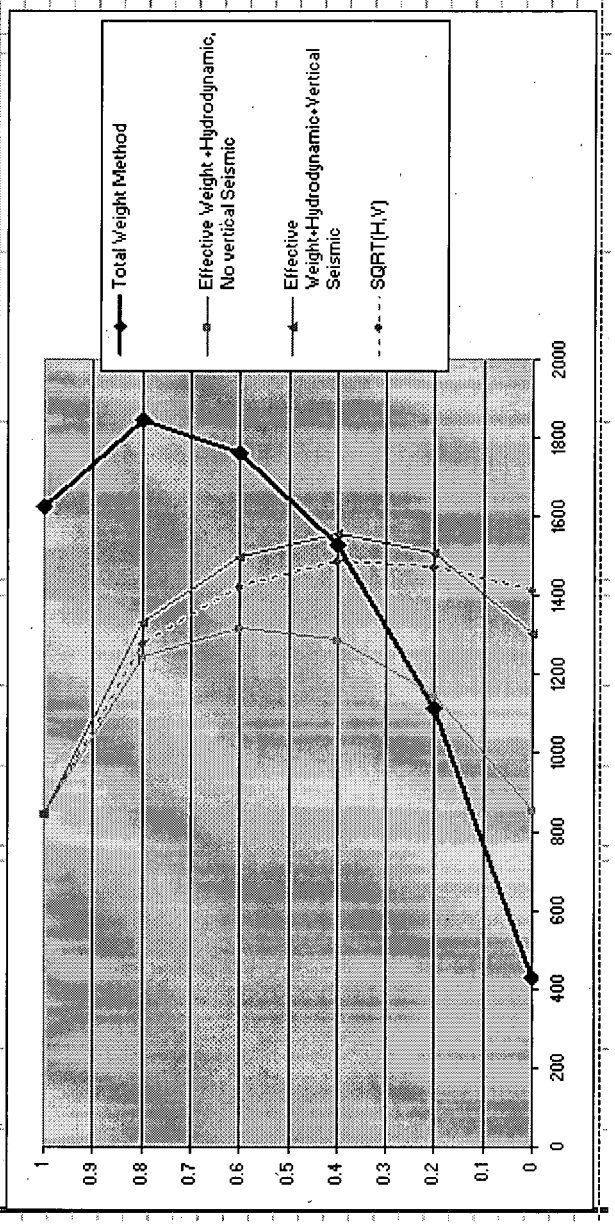

Conclusion: As may be noted in the results shown above, using Wood's solution with total unit weight (γ_t) is more conservative than using actual combination with exact unit weights.

3) <u>Earth Pressure due to Rotation of Wall Base</u>

For the vertical walls of the R/B or other structures the displacements should be such as to result in a uniform extension or compression of sufficiently large magnitude to create strain conditions for plastic yield in the backfill soil mass. Terzaghi (1943) demonstrated that active pressure will be exerted on the retaining wall only when the wall has displaced far enough from the backfill in

translation of the base or rotation about the heel of the wall. Similarly the maximum passive resistance of the backfill is accompanied by sufficient displacement of the wall toward the backfill or rotation at the heel or a combination of the two. Results from triaxial tests show that compressive strains $\varepsilon_h \geq 2.0$ % are needed to mobilize the passive resistance of the soil mass. The soil-structure interaction analysis for the US-APWR structure has been performed utilizing properties of the structure (stiffness, damping, etc) and soil and the results show that the wood's pressure envelopes dynamic soil pressure obtained from SSI analysis. FEMA 450 (HEHRP Recommended Provisions for Seismic Regulations for New Buildings and Other Structures) Commentary on the subject also concludes that for embedded structures subjected to ground shaking, depending on the dynamic properties of the backfill as well as the frequency characteristics of the input ground motion, a range of dynamic earth pressure solutions would be obtained for which the Mononobe-Okabe solution and the Wood solution represent a "lower" and an "upper" bound, respectively.

Impact on DCD

There is no impact on the DCD.

Impact on COLA

There is no impact on the COLA.

Impact on PRA

There is no impact on the PRA.

RESPONSE TO REQUEST FOR ADDITIONAL INFORMATION

2/4/2010

US-APWR Design Certification

Mitsubishi Heavy Industries

Docket No. 52-021

RAI NO.:	**NO. 496-3735 REVISION 0**
SRP SECTION:	**03.08.05 - Foundations**
APPLICATION SECTION:	**3.8.5**
DATE OF RAI ISSUE:	**12/01/2009**

QUESTION NO. RAI 03.08.05-31:

In its response to Part (a) of Question 3.8.4-12, MHI describes the changes made to both DCD Tier 1 and DCD Tier 2 regarding the maximum differential settlement of 2 in. in the reactor building (R/B) complex basemat. MHI explains that the value of 2 in. was obtained considering a soft soil site (shear wave velocity of 1,000 fps), and that the maximum differential settlement represents 1/3 of the estimated maximum settlement of the R/B complex foundation. In the response for Part (b) of the question, MHI states that forces and moments resulting from differential settlement are not combined with other load cases. They explain that the 2 in. maximum differential settlement was intended for use in sizing gaps between adjacent buildings, and that stresses due to this differential settlement are not critical for the design of the foundation basemat.

The applicant is requested to provide the following information:

1. In the response for Part (a) of the question, MHI states that "The specified maximum differential settlement represents one third (1/3) of the estimated maximum settlement of the R/B complex foundation." MHI is requested to provide the technical rationale for choosing 1/3 of the estimated maximum settlement for the differential settlement. Also, in the response, MHI stated that a value of 27.6 lb/in^3 representing the stiffness of the soft soil generic subgrade is used in short term settlement calculation and one half of this value, 13.8 lb/in^3, is used in the long term settlement calculation. MHI is requested to provide technical information and rationale to support the use of one half the value of the stiffness used in the short term settlement to calculate the long term settlement. The staff also notices that the value of 27.6 lb/in3 used in the calculation of the short-term foundation settlement is taken from Table 2(c) given in the MHI's response to RAI 3.8.5-7 of this RAI, and that it represents the average of soil spring constant of the lump-mass model. As discussed in the evaluation of RAI 3.8.5-7, this average value is theoretically unsound, and is not accepted by the staff. The applicant is requested to address this issue.

MHI's response for Part (b) of the question is not acceptable. Even if the forces and moments due to the 2 in differential settlement are not critical to the design, these forces and moments need to be combined with the forces and moments due to other loads. The staff considers that foundation uplift and differential settlement are two additive events. MHI is requested to consider these as

additive events or to provide the rationale and justification for why these loads should not be combined in the analysis.

Reference: MHI response to RAI 340-2004, dated 7/3/2009, MHI Ref: UAP-HF-09363, ML091900557.

ANSWER:

NRC questions are repeated below in italics and answered separately:

Question 03.08.05-31(a)1:

In the response for Part (a) of the question, MHI states that "The specified maximum differential settlement represents one third (1/3) of the estimated maximum settlement of the R/B complex foundation." MHI is requested to provide the technical rationale for choosing 1/3 of the estimated maximum settlement for the differential settlement.

Answer:

This discussion applies to soft soil sites, where the mat is much stiffer than the subgrade, and mat deflections due to bending can be neglected. The differential settlement discussed here results from foundation tilt, typically due to natural non-uniformities in soil deformability characteristics. It is well known that soil properties are variable even within so called "homogeneous" geological formations (or soil layers). This natural variability has been extensively studied and is usually described as a random field, thru its probabilistic characteristics (such as standard deviation and correlation structure). The main parameter of the correlation structure is the correlation distance (denoted hereafter by θ), which is a measure of the spatial extent over which soil properties show strong correlation in their values. Typical values of correlation distances for soil properties variability in horizontal directions are between 40m and 60m (130 to 200ft) – e.g. Phoon and Kulhawy (1999).

Differential settlements of a structure under normal loading (typically dead and live loads acting vertical and centric), is proportional with the degree of variability of soil deformability (expressed thru standard deviation) and depends strongly on the ratio between structure dimensions (denoted hereafter by B) and the correlation distance of soil variability (θ). In the absence of specific calculations, a very conservative value for this differential settlement is generally accepted as ½ of the total settlement. This value corresponds to foundations of typical sizes, with B of the order of tens of feet to 100ft. Assuming an average depth of about 2xB for the pressure bulb below structure (that is responsible for settlements) and the 2 to 1 rule for pressure distribution with depth, the average width of interest for settlements of typical foundations is about 2xB, or up to 200ft, i.e. within the range of correlation distances for soil variability (θ).

As the size of foundation (B) increases with respect to θ, the effect of soil variability on foundation behavior goes down, due to the spatial averaging effect. This effect is described mathematically by the variance function, $\gamma(T,\theta)$ that depends on the ratio between θ and the size of averaging distance T (based on the assumptions stated in the preceding paragraph, here $T \approx 2xB$). Given the variance of the original random field describing soil properties variability, σ, the variance of the averaged random field of soil properties (resulting after local averaging over an interval of size T) is calculated as:

$$\sigma(T) = \sigma \cdot \gamma(T,\theta) \quad (1)$$

The functional form of the variance function depends on the particular correlation structure of the spatial variability of soil properties. A simplified relation for $\gamma(T,\theta)$ that envelops variance functions for most common correlation structures is presented by Vanmarcke (1983), as:

$$\gamma(T,\theta) = \begin{Bmatrix} 1 \ldots \theta \le T \\ \frac{\theta}{T} \ldots \theta > T \end{Bmatrix} \quad (2)$$

Based on eqns. (1) and (2) and conservatively assuming θ = 200ft, γ for foundations of typical sizes (B ≤ 100ft or T ≤ 200ft) is equal to one, and the variance of soil variability is not reduced. For the reactor building, with equivalent size B_{equiv} about 240ft, the average length is T = 480ft, and the variance of soil variability is reduced to about 40%. In terms of standard deviation (which is the square root of variance), this reduction coefficient is 0.64. Since differential settlements due to soil variability are proportional to the standard deviation of soil properties (in this case: deformation modulus), the reduction from 0.5 of total settlement (conservative value for typical size foundations, with B ≤ 100ft) to 0.33 of total settlement for large foundations (B_{equiv} = 240ft) is justified by the local averaging effect of the foundation leading to reduction in the effect of soil variability.

During the site specific analysis, special conditions (such as larger than usual non-uniformity of soil properties, variable thickness of soil layers, etc.) may be encountered. In this situation the COL Applicant will be responsible for detailed settlement analysis based on site specific conditions.

Reference:

Phoon K-K, Kulhawy FH. (1999). Characterization of geotechnical variability. Canadian Geotechnical Journal. 36:612–24.

Question 03.08.05-31(a)2:

Also, in the response, MHI stated that a value of 27.6 lb/in^3 representing the stiffness of the soft soil generic subgrade is used in short term settlement calculation and one half of this value, 13.8 lb/in^3, is used in the long term settlement calculation. MHI is requested to provide technical information and rationale to support the use of one half the value of the stiffness used in the short term settlement to calculate the long term settlement.

Answer:

In the MHI Answer to RAI 3.8.5-12, "short term" and "long term" stiffness was intended to actually refer to stiffness corresponding to "short duration loads" and "long duration loads", respectively. The values of the subgrade modulus (or spring stiffness) referred to in the Answer to RAI 3.8.5-12 will be recalculated to correspond to the new set of generic layered soil profiles, which will be presented in a technical report scheduled to be issued in February 2010 and in April 2010. The information of subgrade modulus will be available separately in April 2010.

Question 03.08.05-31(a)3:

The staff also notices that the value of 27.6 lb/in3 used in the calculation of the short-term foundation settlement is taken from Table 2(c) given in the MHI's response to RAI 3.8.5-7 of this RAI, and that it represents the average of soil spring constant of the lump-mass model. As discussed in the evaluation of RAI 3.8.5-7, this average value is theoretically unsound, and is not accepted by the staff. The applicant is requested to address this issue.

Answer:

Using a uniform value for soil spring stiffness is not a sound approach for the structural analysis of efforts in the mat and it was corrected as discussed in MHI's answer to question 03.08.01-5, Part 2b. The short term loading and the long term loading spring stiffness at each location on the basemat will be calculated as shown in the above referred MHI answer. The average values of short term loading and long term loading spring stiffness over the entire basemat will be provided based on the new set of generic layered soil profiles discussed in the previous Answer (03.08.05-31(a)2).

Question 03.08.05-31(c)

MHI's response for Part (b) of the question is not acceptable. Even if the forces and moments due to the 2 in differential settlement are not critical to the design, these forces and moments need to be combined with the forces and moments due to other loads. The staff considers that foundation uplift and differential settlement are two additive events. MHI is requested to consider these as additive events or to provide the rationale and justification for why these loads should not be combined in the analysis.

Answer:

To clarify the MHI Answer to Question 03.08.05-12, Part b, the following statement is added here:

The forces and moments due to settlement are considered as additive events and are combined in the analyses. As noted previously, the stresses generated by differential settlements under static loads leading to differential settlements of 2in are not critical for the design of the mat. The design is governed by other load combinations resulting from extreme environmental conditions. However, the load combinations due to extreme environmental conditions also include the static loads. Therefore the stresses from the 2in differential settlements are included in the mat design.

Impact on DCD

There is no impact on the DCD.

Impact on COLA

There is no impact on the COLA.

Impact on PRA

There is no impact on the PRA.

RESPONSE TO REQUEST FOR ADDITIONAL INFORMATION

2/4/2010

US-APWR Design Certification

Mitsubishi Heavy Industries

Docket No. 52-021

RAI NO.:	**NO. 496-3735 REVISION 0**
SRP SECTION:	**03.08.05 - Foundations**
APPLICATION SECTION:	**3.8.5**
DATE OF RAI ISSUE:	**12/01/2009**

QUESTION NO. RAI 03.08.05-32:

In its response to Part (a) of Question 3.8.5-13, MHI points out that the COL Applicant is responsible to demonstrate the structural integrity of the basemat during construction. Settlement calculations are to be made at several stages of the construction including immediate settlement, dewatering, and when applicable, longer term settlement. If site-specific settlements exceed those in the DCD standard plant, the COL Applicant must demonstrate structural adequacy. For Part (b) of the question, MHI explains that settlement calculations are based on a "soft soil" site. For Part (c) of the question, MHI states that since the magnitude of the bearing pressures under surrounding structures is less than ½ that under the R/B complex, the effects of these are not considered. MHI points out that the layout of structures surrounding the R/B complex can vary with different sites. As a result, the COL Applicant is responsible to assure that effects of settlement of any surrounding structures do not compromise the structural integrity of the R/B complex or to important safety equipment.

The applicant is requested to provide the following information:

1. In the response(for Part (a) of the question, MHI states that "If the results of the site-specific settlement investigation indicate construction settlements that are larger than those considered during the standard design, or if the site-specific construction sequence is different than the expected construction sequence considered in the standard design, the COL Applicant must demonstrate that the standard design of the basemat reinforcement is sufficient to ensure the structural integrity of the basemat under the site-specific conditions." The staff agrees with MHI that the settlement needs to be checked. Per Subarticles CC-3561 and CC-3566 of ASME Section III, Division 2, the short term and long term settlements should be investigated. However, the staff is not able to find the allowable short term and long term displacements specified in the DCD. The applicant is requested to specify this information in the DCD for which the COL applicant is required to comply.

2. For Part (b) of the response, MHI indicated that the elastic subgrade coefficients of 27.6 lb/in^3 and 13.8 lb/in3 are used in the calculations of the immediate settlement and long term settlement, respectively. As it has been discussed in the evaluation to the response to Question 3.8.5-12 of this RAI, these two coefficients are not acceptable to the staff. The applicant is requested to provide the rationale for using these coefficients.

3. For Part (c) of the response, MHI states that "The effects of the nearby structures are not considered in the analyses performed to address the effects of construction settlements on the standard design of the R/B complex common basemat. Since the magnitudes of the bearing pressure under the surrounding foundations are less than half of the bearing pressure under the common basemat of the R/B complex, it is reasonable to expect that for the majority of candidate sites their effect will not be significant." The staff is not convinced by the reason given for not considering the effects of nearby structures. The applicant is requested to provide numerical data to support the statement made above. In addition, the applicant is requested to consider the flip side of their response, i.e., that the settlement of the surrounding foundations will be influenced by the common basemat because the bearing pressure under the common basemat is twice of the bearing pressure under the surrounding foundation. Is this effect considered for the standard plant design?

Reference: MHI response to RAI 340-2004, dated 7/3/2009, MHI Ref: UAP-HF-09363, ML091900557.

ANSWER:

1. Long term allowable differential settlements and rotations (occurring during the operational life) are listed in the last 2 lines of Table 2.0-1. Total (i.e. occurring during construction and the operational life) allowable displacements are listed in the same table, in the two preceding lines. Explanatory notes will be added to Table 2.0-1 to clarify this issue.

2. Please refer to MHI's Answer to Question 03.08.05-31.

3. MHI will provide an answer and numerical data based on the generic layered profiles that will be included in a technical report scheduled to be issued in February 2010 and in April 2010. The answer and numerical data will be available separately in April 2010.

Impact on DCD

See Attachment 4 for the mark-up of DCD Tier 2, Section 2.0, changes to be incorporated.

- Add notes 15 and 16 to Table 2.0-1 to clarify allowable displacements.

Impact on COLA

There is no impact on the COLA.

Impact on PRA

There is no impact on the PRA.

RESPONSE TO REQUEST FOR ADDITIONAL INFORMATION

2/4/2010

US-APWR Design Certification

Mitsubishi Heavy Industries

Docket No. 52-021

RAI NO.:	**NO. 496-3735 REVISION 0**
SRP SECTION:	**03.08.05 - Foundations**
APPLICATION SECTION:	**3.8.5**
DATE OF RAI ISSUE:	**12/01/2009**

QUESTION NO. RAI 03.08.05-33:

In its response to Question 3.8.5-17, MHI presents a formula used for calculating the shear (or sliding) resistance, Fs, along with a range of assumed variables used to calculate F_s.

The staff notices that MHI's explanation of how the shear (sliding) resistance, F_s, is calculated based on an assumed coefficient of friction between the bottom of the foundation basemats and the supporting soil. The resulting value using an angle of internal friction of 35 degrees is 0.7 for the coefficient of friction. However, the bottom of the foundation basemat is not in contact with the soil. It contacts with the fill concrete (see MHI's response to Question 3.8.4-1 of RAI 342-2000); therefore, the friction coefficient should be that of concrete to concrete. The applicant is requested to make this correction and provide the technical basis for the friction coefficient used. If the friction coefficient is different than 0.7, the factor of safety listed in the Table included in the MHI's response to Question 3.8.5-18 of this RAI should be updated.

References:

MHI response to RAI 340-2004, dated 7/3/2009, MHI Ref: UAP-HF-09363, ML091900557

MHI response to RAI 342-2000, dated 7/3/2009, MHI Ref: UAP-HF-09360, ML091900558

ANSWER:

A. Concrete-to-concrete coefficient of friction

It is recognized that there are two (2) shear planes; e.g., at the interface between the bottom of foundation fill concrete and the supporting soil (soil-to-concrete friction surface) and at the interface between the fill concrete and the bottom of the structural foundation mat (concrete-to-concrete friction surface).

The value of the coefficient of friction (μ) for concrete-to-concrete friction is dependent upon the configuration of the mating surfaces and age of concrete and it varies between 0.6 and 1.4 (per ACI–349, Section 11.7). μ = 0.6 is for concrete placed against hardened concrete not intentionally roughened and 1.4 is for concrete placed monolithically. The construction sequence

of the foundation for US-APWR will entail a value between these two values, since the lean concrete base will not have long term hardening effects prior to placement of the structural foundation. Therefore, $\mu = 0.7$ is very reasonable.

Literature survey reveals that coefficient of friction from 0.8 to 1.0 may be used for construction joints and for concrete-to-steel interfaces (State of the Art Report on Finite Element Analysis of Reinforced Concrete: ASCE; Chapter 5, Shear Transfer). Since concrete-to-concrete interface has coefficient of friction greater than concrete-to-steel, the value of μ for concrete-to-concrete interface is ≥ 0.7 (and as such $\mu = 0.7$ is satisfactory).

However, as noted in response to RAI No. 489-3516, Rev.0, Question No. 03.04.02-5, at certain sites a minor roughening of the fill concrete surface may be required.

B. <u>The factors of safety</u>

The factors of safety provided in the Tables in response to RAI 342-2000, Question No. 03-08-05-18 need not be revised. Since $\mu \geq 0.7$, the values will either remain the same or will be greater than those shown in the Tables and are conservative.

Impact on DCD

There is no impact on the DCD.

Impact on COLA

There is no impact on the COLA.

Impact on PRA

There is no impact on the PRA.

RESPONSE TO REQUEST FOR ADDITIONAL INFORMATION

2/4/2010

US-APWR Design Certification

Mitsubishi Heavy Industries

Docket No. 52-021

RAI NO.:	**NO. 496-3735 REVISION 0**
SRP SECTION:	**03.08.05 - Foundations**
APPLICATION SECTION:	**3.8.5**
DATE OF RAI ISSUE:	**12/01/2009**

QUESTION NO. RAI 03.08.05-34:

In its response to Part (a) of Question 3.8.5-19 MHI states that no special measures are taken to prevent concrete cracking at the interface between the 7000 psi and 4000 psi concrete. They will, however, adhere to provisions of American Concrete Institute (ACI) 224R where applicable. MHI claims that by assuring that adequate reinforcement exists at this interface is sufficient to control the cracking. In addition, this area is checked to assure that sufficient margin exists to account for creep and shrinkage stresses. For Part (b) MHI states that at the interface between the concrete governed by ASME Section III, Division 2, and concrete governed by ACI-349, the larger amount of reinforcement required by either code will apply. For Part (c) MHI explains the approach to separating primary and secondary stresses by stating that the primary stress case does not include thermal stress, while the secondary stress case does include thermal stress.

The staff finds MHI's responses for Parts (a) and (b) of the question to be acceptable. This conclusion is based on MHI's statement that they will follow provisions of ACI 224R for the massive concrete pours, and by assuring adequate reserve in the steel reinforcement to resist stresses due to creep and shrinkage, and that reinforcement at the juncture between concrete covered by ASME Code and concrete covered by ACI 349 will be based on the larger values that obtain from each of these codes.

However, the staff finds that MHI's response for Part (c) of the question is not acceptable. The classification of primary and secondary stresses depends on the location and type of stresses. See Table CC-3136.6-1 of ASME Section III Division 2 for more details. The applicant is requested to provide information that addresses the issue of classification of primary and secondary stresses as discussed above.

Reference: MHI response to RAI 340-2004, dated 7/3/2009, MHI Ref: UAP-HF-09363, ML091900557.

ANSWER:

Loads and load combinations for the PCCV-R/B-containment internal structure common basemat are evaluated and designed as discussed in DCD Subsection 3.8.5.3. For those portions of the

PCCV-R/B-containment internal structure common basemat whose design is governed by ASME BPV Code Section III Division 2, primary and secondary forces are considered as defined in Table CC-3136.6-1. As discussed in ASME B & PV Code Section III, Division 2, Section CC-3136.5, a secondary stress is a stress that would not be required for equilibrating the applied reactions. Secondary stresses occur under conditions where deformations or volume changes are restrained and may be due to applied mechanical loads, temperature differences, creep effects, or imposed shrinkage strains. The source of restraint may be internal such as occurs under a temperature gradient across a wall or slab, or external such as at the sudden change in geometry at an equipment access opening in the containment wall.

In the basemat, secondary stresses caused by creep and shrinkage are not significant and are addressed by ensuring the design of the basemat meets the code requirements for the minimum amounts of reinforcing and the minimum spacing between the reinforcing bars. Secondary stresses in the basemat created by thermal loads are also considered in the basemat design. Thermal loads on the basemat are not analyzed as primary stresses because thermal stresses do not create through-thickness shear stresses in the basemat. As discussed in Subarticles CC-3420 and CC-3430, allowable stresses for factored and service loads are different depending on the type of force (membrane, bending, shear) and its classification (primary, secondary). Therefore, a separate analysis is performed for the basemat for thermal loads. However, thermal loads are included in the ASME (and ACI) load combinations for evaluation for structural acceptance. The load combinations based on ASME are given in DCD Table 3.8.1-2 and the load combinations based on ACI are given in DCD Table 3.8.4-3.

Impact on DCD

There is no impact on the DCD.

Impact on COLA

There is no impact on the COLA.

Impact on PRA

There is no impact on the PRA.

RESPONSE TO REQUEST FOR ADDITIONAL INFORMATION

2/4/2010

US-APWR Design Certification

Mitsubishi Heavy Industries

Docket No. 52-021

RAI NO.:	**NO. 496-3735 REVISION 0**
SRP SECTION:	**03.08.05 - Foundations**
APPLICATION SECTION:	**3.8.5**
DATE OF RAI ISSUE:	**12/01/2009**

QUESTION NO. RAI 03.08.05-35:

In its response to Question 3.8.5-22, MHI states that mix designs for any concrete below the foundations of the standard plant are determined by the COL Applicant on a site-specific basis. The DCD will be revised to state the use of "fill" concrete instead of "lean" concrete presently specified. Reference is made to MHI's response to Question 3.8.4-1 of RAI 342-2000 for a detailed description of the fill concrete. MHI states that the DCD will be revised (Revision 2) to indicate fill concrete in lieu of lean concrete, including COL 3.8(23) item that addresses this matter.

MHI's response states that the DCD will be revised to state that fill concrete rather that lean concrete will be used under the basemats for the standard plant design. The staff finds that a description of the fill concrete was given in MHI's response to Question 3.8.4-1 of RAI 342-2000, which response was found acceptable by the staff. However, as noted by the staff in that evaluation, it appeared that a COL item was needed to address the use of this fill concrete, and that MHI needed to add this COL item to the DCD. The applicant is requested to add a COL item to the DCD in which the COL Applicant is assigned the responsibility for the use of the fill concrete.

References:

MHI response to RAI 340-2004, dated 7/3/2009, MHI Ref: UAP-HF-09363, ML091900557

MHI response to RAI 342-2000, dated 7/3/2009, MHI Ref: UAP-HF-09360, ML091900558

ANSWER:

DCD Subsection 3.7.1.3 discusses the supporting media for seismic category I structures. When used under basemats on a site-specific basis, fill concrete is evaluated as a supporting medium. As stated in COL 3.7(7) and the second paragraph of DCD Subsection 3.7.1.3, the COL Applicant is to determine the allowable dynamic bearing capacity based on site conditions, and to evaluate the bearing load to this capacity. The FSAR of Comanche Peak Units 3 and 4 (docketed as the R-COLA) provides information of the fill concrete within the second paragraph of Subsection

3.7.1.3, where the fill concrete is stated as having a design compressive strength of 3,000 psi corresponding to a shear wave velocity of 6,400 ft/sec.

COL 3.7(7) will be revised to clarify that the properties of fill concrete used as a supporting medium are also discussed in DCD Subsection 3.7.1.3. An additional COL item to assign the use of fill concrete to the COL Applicant is not necessary since the COL Applicant incorporates the DCD by reference.

Impact on DCD

See Attachment 1 for the mark-up of DCD Tier 2, Section 3.7, changes to be incorporated.

- Change the next-to-last sentence of the second paragraph in Subsection 3.7.1.3 to the following: "The COL Applicant is to determine the allowable dynamic bearing capacity based on site conditions, including the properties of fill concrete placed to provide a level surface that matches the bottom of foundation elevations, and to evaluate the bearing load to this capacity."

- Change *COL3.7(7)* in Subsection 3.7.5 to the following: "*The COL Applicant is to determine the allowable dynamic bearing capacity based on site conditions, including the properties of fill concrete placed to provide a level surface that matches the bottom of foundation elevations, and to evaluate the bearing load to this capacity.*"

See Attachment 2 for the mark-up of DCD Tier 2, Section 1.8, changes to be incorporated.

- Change *COL3.7(7)* in Table 1.8-2 (sheet 7 of 44) to the following: "*The COL Applicant is to determine the allowable dynamic bearing capacity based on site conditions, including the properties of fill concrete placed to provide a level surface that matches the bottom of foundation elevations, and to evaluate the bearing load to this capacity.*"

Impact on COLA

The COL Item description for *COL 3.7(7)* in Table 1.8-201 (Sheet 9 of 62) is to be changed to the following: "*The COL Applicant is to determine the allowable dynamic bearing capacity based on site conditions, including the properties of fill concrete placed to provide a level surface that matches the bottom of foundation elevations, and to evaluate the bearing load to this capacity.*"

Impact on PRA

There is no impact on the PRA.

This completes MHI's responses to the NRC's questions.

The damping values for systems that include two or more substructures, such as a concrete and steel composite structure, can be obtained using the strain energy method. The strain energy dependent modal damping values are computed based on Reference 3.7-18, which is the same as the stiffness weighted composite modal damping method, and acceptable to SRP 3.7.2 (Reference 3.7-16).

The stiffness weighted modal damping ratio h_j of the jth mode is obtained from the following equation:

$$h_j = \frac{\vec{\phi}_j^{\,T}[\bar{K}]\vec{\phi}_j}{\vec{\phi}_j^{\,T}[K]\vec{\phi}_j}$$

where

$[K]$ = the stiffness matrix of the combined soil-structure system

$\vec{\phi}_j$ = the jth normalized mode shape vector

$[\bar{K}] = \sum [k_i] \cdot \xi_i$ = the modified stiffness matrix constructed from the products of the element stiffness matrices $[k_i]$ and the applicable damping ratio ξ_i

Formulation of damping values for the seismic analysis models which incorporate the combined soil-structure damping is discussed in Subsection 3.7.2.1. Damping values associated with site-specific SSI analyses are addressed in Subsection 3.7.2.4.1.

3.7.1.3 Supporting Media for Seismic Category I Structures

A range of soil parameters of the basemat supporting media are considered in the seismic design of seismic category I building structures for the US-APWR standard plant. The overall basemat dimensions, basemat embedment depths, and maximum height of the US-APWR R/B, PCCV, and containment internal structure on their common basemat are given in Table 3.7.1-3 and as updated by the COL Applicant to include site-specific seismic category I structures.

The required allowable static bearing capacity for seismic category I building structure basemats, including the R/B-PCCV-containment internal structure on their common basemat, is 15 ksf. The dynamic bearing loads for seismic category I structure basemats are dependent upon the magnitude of the seismic loads that can be obtained from a site-specific seismic analysis that considers FIRS. The COL Applicant is to determine the allowable dynamic bearing capacity based on site conditions, <u>including the properties of fill concrete placed to provide a level surface that matches the bottom of foundation elevations,</u> and to evaluate the bearing load to this capacity. A minimum factor of safety of 2 is suggested for the ultimate bearing capacity versus the allowable dynamic bearing capacity; however, a different value may be justified based on site-specific geotechnical conditions.

The site-independent seismic design of seismic category I and seismic category II SSCs uses lumped parameter representation to model the interaction of seismic category I structures with the supporting media. The lumped parameter model

COL3.7(5) *The COL Applicant is to assure that the horizontal FIRS defining the site-specific SSE ground motion at the bottom of seismic category I or II basemats envelope the minimum response spectra required by 10 CFR 50, Appendix S, and the site-specific response spectra obtained from the response analysis.*

COL3.7(6) *The COL Applicant is to develop site-specific GMRS and FIRS by an analysis methodology, which accounts for the upward propagation of the GMRS. The FIRS are compared to the CSDRS to assure that the US-APWR standard plant seismic design is valid for a particular site. If the FIRS are not enveloped by the CSDRS, the US-APWR standard plant seismic design is modified as part of the COLA in order to validate the US-APWR for installation at that site.*

COL3.7(7) *The COL Applicant is to determine the allowable dynamic bearing capacity based on site conditions, including the properties of fill concrete placed to provide a level surface that matches the bottom of foundation elevations, and to evaluate the bearing load to this capacity.*

COL3.7(8) *The soil properties may be considered strain-independent for subgrade materials with initial shear wave velocities of 3,500 ft/s or higher, to be confirmed by the COL Applicant as part of the site-specific subsurface material investigations discussed in Section 2.5.4. However, the COL Applicant must institute dynamic testing to evaluate the strain-dependent variation of the material dynamic properties for site materials with initial shear wave velocities below 3,500 ft/s.*

COL3.7(9) *The COL Applicant is to assure that the design or location of any site-specific seismic category I SSCs, for example pipe tunnels or duct banks, will not expose those SSCs to possible impact due to the failure or collapse of non-seismic category I structures, or with any other SSCs that could potentially impact, such as heavy haul route loads, transmission towers, non safety-related storage tanks, etc.*

COL3.7(10) *It is the responsibility of the COL Applicant to further address structure-to-structure interaction if the specific site conditions can be important for the seismic response of particular US-APWR seismic category I structures, or may result in exceedance of assumed pressure distributions used for the US-APWR standard plant design.*

COL3.7(11) *Deleted*

Table 1.8-2 Compilation of All Combined License Applicant Items for Chapters 1-19 (sheet 7 of 44)

COL ITEM NO.	COL ITEM
COL 3.7(6)	*The COL Applicant is to develop site-specific GMRS and FIRS by an analysis methodology, which accounts for the upward propagation of the GMRS. The FIRS are compared to the CSDRS to assure that the US-APWR standard plant seismic design is valid for a particular site. If the FIRS are not enveloped by the CSDRS, the US-APWR standard plant seismic design is modified as part of the COLA in order to validate the US-APWR for installation at that site.*
COL 3.7(7)	*The COL Applicant is to determine the allowable dynamic bearing capacity based on site conditions, including the properties of fill concrete placed to provide a level surface that matches the bottom of foundation elevations, and to evaluate the bearing load to this capacity.*
COL 3.7(8)	*The soil properties nay be considered strain-independent for subgrade materials with initial shear wave velocities of 3,500 ft/s or higher, to be confirmed by the COL Applicant as part of the site-specific subsurface material investigations discussed in Section 2.5.4. However, the COL Applicant must institute dynamic testing to evaluate the strain-dependent variation of the material dynamic properties for site materials with initial shear wave velocities below 3,500 ft/s.*
COL 3.7(9)	*The COL Applicant is to assure that the design or location of any site-specific seismic category I SSCs, for example pipe or duct banks, will not expose those SSCs to possible impact due to the failure or collapse of non-seismic category I structures, or with any other SSCs that could potentially impact, such as heavy haul route loads, transmission towers, non safety-related storage tanks, etc.*
COL 3.7(10)	*It is the responsibility of the COL Applicant to further address structure-to-structure interaction if the specific site conditions can be important for the seismic response of particular US-APWR seismic category I structures, or may result in exceedance of assumed pressure distributions used for the US-APWR standard plant design.*
COL 3.7(11)	*Deleted*
COL 3.7(12)	*It is the responsibility of the COL Applicant to design seismic category I below- or above-ground liquid-retaining metal tanks such that they are enclosed by a tornado missile protecting concrete vault or wall, in order to confine the emergency gas turbine fuel supply.*

include acceptance criteria for overturning, sliding, and flotation as detailed in Table 3.8.5-1. The non-ASME portion of the basemat is designed in accordance with ACI-349 (Reference 3.8-8) and the provisions of RG 1.142 (Reference 3.8-19), where applicable. The reinforced concrete basemat for the PCCV and enveloped containment internal structure are designed in accordance with ASME Code Section III, Division 2, Subsection CC (Reference 3.8-2). Figure 3.8.5-4 delineates basemat regions applicable to each Code.

3.7.1.1 Design and Analysis Procedures

Based on the premise that seismic category I buildings basemats are not supported on bedrock, a computer analysis of the SSI is performed for static and dynamic loads. Subsection 3.7.2 provides further information. Two types of SSI analyses are required for the R/B and the PS/Bs: an overall seismic analysis of the building for the superstructure design, and a local analysis of the basemat for its design. For the basemat design, the basemat is modeled using solid finite elements with springs representing the subgrade.

The seismic category I structures are concrete, shear-wall structures consisting of vertical shear/bearing walls and horizontal floor slabs designed to SSE accelerations as discussed in Section 3.7. The walls carry the vertical loads from the structure to the basemat. Lateral loads are transferred to the walls by the roof and floor slabs. The walls then transmit the loads to the basemat. The walls also provide stiffness to the basemat and distribute the loads between them.

The reinforced concrete basemat for the PCCV and enveloped containment internal structure are designed in accordance with ASME Code Section III, Division 2, Subsection CC (Reference 3.8-2). Other seismic category I basemats of reinforced concrete are designed in accordance with ACI-349 (Reference 3.8-8) and the provisions of RG 1.142 (Reference 3.8-19) where applicable. Table 3.8.5-2 identifies the material properties of concrete and Figure 3.8.5-4 delineates the governing codes based on region of the R/B, PCCV and containment internal structure basemat.

3.7.1.1.1 Properties of Subgrade

For purposes of the US-APWR standard design, the SSI effects are captured by considering three generic subgrade types utilizing frequency independent springs. A fourth subgrade condition is also considered, that of a foundation resting on hard rock. For the fourth condition, it is not necessary to consider SSI effects because the foundation is considered to be resting on a fixed base that is rigid. Subsection 3.7.2.4 provides further discussion relating to SSI and the selection of subgrade types.

The four supporting media (subgrade) conditions for the US-APWR design are provided in Table 3.8.5-3.

The properties of conditions provided in Table 3.8.5-3 are considered to represent stiffness properties of the subgrade material that are compatible to the strains generated in the soil by the input design ground motion. ~~The dissipation of energy in the subgrade media due to the soil material damping is conservatively neglected~~.

ATTACHMENT 4
to RAI 496-3735

Table 2.0-1 Key Site Parameters (Sheet 8 of 8)

Total settlement of R/B complex foundation(14)(15)	6.0 in.
Differential settlement across R/B complex foundation(14)(15)	2.0 in.
Maximum differential settlement between buildings(14)(16)	0.5 in.
Maximum tilt of R/B complex foundation generated during operational life of the plant(14)(16)	1/2000

NOTES:

1. The specified missiles are assumed to have a vertical speed component equal to 2/3 of the horizontal speed.
2. These dispersion factors are chosen as the maximum values at all intake points.
3. These dispersion factors are chosen as the maximum values at all inleak points.
4. These dispersion factors are used for a loss-of-coolant accident (LOCA) and a rod ejection accident.
5. These dispersion factors are used for a LOCA, a rod ejection accident, a failure of small lines carrying primary coolant outside containment and a fuel-handling accident inside the containment.
6. These dispersion factors are used for a steam generator tube rupture, a steam system piping failure, a reactor coolant pump rotor seizure and a rod ejection accident.
7. These dispersion factors are used for a fuel handling accident occurring in the fuel storage and handling area.
8. These dispersion factors are used for a steam system piping failure.
9. These dispersion factors are used for a LOCA.
10. These dispersion factors are used for a rod ejection accident, a failure of small lines carrying primary coolant outside containment and a fuel-handling accident inside the containment.
11. Normal winter precipitation roof load is determined by converting ground snow load p_g in accordance with ASCE 7-05. The ground snow load p_g is based on the highest ground-level weight of:
    - the 100-year return period snowpack,
    - the historical maximum snowpack,
    - the 100-year return period snowfall event, or
    - the historical maximum snowfall event in the site region.
12. The extreme winter precipitation roof load is based on the sum of the normal ground level winter precipitation plus the highest weight at ground level resulting from either the extreme frozen winter precipitation event or the extreme liquid winter precipitation event. The extreme frozen winter precipitation event is assumed to accumulate on the roof on top of the antecedent normal winter precipitation event. The extreme liquid winter precipitation event may not accumulate on the roof, depending on the geometry of the roof and the type of drainage provided. The extreme winter precipitation roof load is included as live load in extreme loading combinations using the applicable load factor indicated in DCD Section 3.8.
13. The 48-hour PMWP is based on interpolation of 24-hour PMP and 72-hour PMP data for the month of March in HMR-53 (Reference: Hydrometeorological Report No. 53, Seasonal Variation of 10-Square-Mile Probable Maximum Precipitation Estimates, United States East of the 105th Meridian, Figures 27 and 37)
14. Acceptable parameters for settlement without further evaluation.
15. Settlements occurring during construction and operational life.
16. Settlements occurring during operational life only.