Stephen E. Quinn
Vice President

Consolidated Edison Company of New York, Inc.
Indian Point Station
Broadway & Bleakley Avenue
Buchanan, NY 10511
Telephone (914) 734-5340

July 31, 1996

Re: Indian Point Unit No. 2
Docket No. 50-247

Document Control Desk
US Nuclear Regulatory Commission
Mail Station PI-137
Washington, D.C. 20555

SUBJECT: Request for Additional Information, Indian Point Station Unit 2, Response to Generic Letter 95-07, "Pressure Locking and Thermal Binding of Safety-Related Power-Operated Gate Valves."

Pursuant to 10 CFR 50.54 (f), this letter shall serve as Con Edison's written response to the request for additional information regarding Con Edison's 180 day response to the subject generic letter.

Generic Letter 95-07, "Pressure Locking and Thermal Binding of Safety-Related, Power-Operated Gate Valves, dated August 17, 1995, requests nuclear utilities to address the susceptibility of Safety-Related Power-Operated Gate Valves to Pressure Locking and Thermal Binding and to evaluate these valves for operability.

The enclosed attachment contains the information requested by the NRC staff to complete their review of Con Edison's response to Generic Letter 95-07 dated February 13, 1996.

Should you or your staff have any concerns regarding this matter, please contact Mr. Charles W. Jackson, Manager, Nuclear Safety & Licensing.

Very truly yours,

Jack McAvoy
for Steve Quinn

Subscribed and sworn to
before me this 31ST day
of July 1996.

Karen L. Lancaster
Notary Public

KAREN L. LANCASTER
Notary Public, State of New York
No. 60-4643659
Qualified In Westchester County
Term Expires 9/30/97

1/1

A056

9608090089 960731
PDR ADOCK 05000247
P PDR

50-247 INDIAN POINT 2 CE

RESPONSE TO RAI RE GENERIC LTR 95-07

REC'D W/LTR DTD 07/31/96....9608090089

- NOTICE -

THE ATTACHED FILES ARE OFFICIAL RECORDS OF THE INFORMATION & RECORDS MANAGEMENT BRANCH. THEY HAVE BEEN CHARGED TO YOU FOR A LIMITED TIME PERIOD AND MUST BE RETURNED TO THE RECORDS & ARCHIVES SERVICES SECTION, T5 C3. PLEASE DO NOT SEND DOCUMENTS CHARGED OUT THROUGH THE MAIL. REMOVAL OF ANY PAGE(S) FROM DOCUMENT FOR REPRODUCTION MUST BE REFERRED TO FILE PERSONNEL.

- NOTICE -

ATTACHMENT 1

ADDITIONAL INFORMATION REQUESTED IN RESPONSE TO GL 95-07

1) REQUEST

Regarding valves 856B/F and PCV-1139, please provide the normal position of these valves, the disk configuration (solid wedge, flexible wedge, parallel disk, split wedge, etc.) and a discussion of the specific pressure locking and thermal binding evaluations performed for these valves.

RESPONSE

Valves 856B/856F are the isolation valves for loops 23/21 Hot Leg SI Line. These valves are motor operated globe valves which are not susceptible to the Pressure Locking or Thermal Binding (PLTB) phenomena therefore they were not included in Con Edison's PLTB evaluations in response to 95-07.

PCV-1139 is in the main steam supply to the Auxiliary Feed Water Pump 22. This valve is an air operated globe valve which is not susceptible to the PLTB phenomena therefore not included in Con Edison's PLTB evaluation in response to Generic Letter 95-07.

2) REQUEST

The NRC staff believes that the following valves may be susceptible to pressure locking:
885A, Containment Sump RHR Suction Isolation
1802A/B Recirculation Pump Discharge Isolation
746, 747 RHR Heat Exchanger Outlet
The NRC staff notes that the Indian Point 3 design configuration includes bonnet relief paths for valves similar to the above to preclude pressure locking. Please provide IP2 specific pressure locking evaluations for these valves, including calculations for our review.

RESPONSE

The ability to open under Pressure Induced Pressure Locking forces can be calculated using Equation 1:

Thrust Required = $\{ (P_b-P_u) + (P_b-P_d) \} \{S_a\} \{V_f\} - (St_a)(P_b) + P_L$ (Equation 1)

P_b = Pressure in valve bonnet
P_u = Pressure upstream of valve
P_d = Pressure downstream of valve
S_a = Valve seat area
V_f = Valve friction factor
St_a = Stem area
P_L = Packing load

Equation 1 was derived from a similar EPRI equation used to calculate the force required to overcome seat frictional resistance in a double seated gate valve. The EPRI equation can be found in section 4.2.9 of EPRI NP-6516, "Guide for the Application and Use of Valves in Power Plant Systems." The EPRI equation was modified to include the upward pressure force on the valve stem and the downward resistance force of the valve packing.

The values obtained for the above equation came from the following sources:

- The component characteristic values (valve seat area S_a, stem area St_a) were obtained from G/L 89-10 program documents (i.e. B&W MOVE Program).

- The packing load P_L was obtained from field testing.

- During the 1993 and 1995 RFOs, dynamic testing was performed on both Anchor Darling and Aloyco Crane double disc gate valves as part of the G/L 89-10 Program. Opening stroke data was recorded and opening valve factors determined. To determine the sensitivity of the valve factor value on Pressure Locking, the maximum valve factor V_{fmax}, was calculated for the maximum value before the onset of Pressure Locking for all vulnerable MOVs.

- The system conditions for each valve prior to and during an accident were used to determine the valve upstream and downstream pressures. For valve maximum bonnet pressure it was assumed that the maximum system pressure would leak past the seat into the bonnet cavity and remain trapped. The maximum bonnet pressure, P_{max}, is the sum of bonnet in-leakage (P_m) plus the bonnet heat-up (P_h). It was also assumed in this evaluation that there is no pressure leakage past two check valves and a closed gate valve or one closed gate valve into the next valve bonnet.

- The thrust available to overcome the forces created by PLTB for each valve was obtained using the lowest thrust value of the following three valve components.

  - ◊ The valve mechanical weak link (WL_v)
  - ◊ The operator mechanical weak link (WL_o)
  - ◊ The maximum motor capacity (T_m)

  The <u>maximum motor capacity</u> can be affected by various sets of conditions. The following are some of these conditions.

  1. The voltage available at the motor
  2. The ambient temperature at the motor
  3. The normal name plate conditions
  4. The locked rotor conditions

  The maximum torque output of the motor was used for this evaluation. Using the B&W MOVE Program, these torques were converted to a thrust output based on gear ratios, stem geometry, and stem coefficient (actual field test data was available for Stem Coefficient (C_f), however a higher value of .15 was used for conservatism). Each motor torque was evaluated under locked rotor conditions, ambient temperature derating, and the expected under voltage. The motor torque value was then converted to a motor thrust and compared to the allowable valve weak link thrust and allowable operator weak link thrust. The lowest thrust value was selected for the final evaluation.

The results of this evaluation are summarized in Table 1. The ratio T_a/T_r is the maximum available actuator thrust from the MOV divided by the calculated thrust required to open against the maximum valve bonnet pressure due to in leakage and bonnet heat-up (actual system conditions).

If $T_a/T_r > 1.0$ there is sufficient actuator force to open the valve under the highest trapped bonnet pressure, therefore Pressure Induced Pressure Locking cannot occur.

If $T_a/T_r < 1.0$ there is insufficient actuator force to open the valve under the highest trapped bonnet pressure, therefore Pressure Induced Pressure Locking can occur.

The following section includes an individual evaluation for the valves requested. Each valve evaluation includes a system flow diagram. The flow diagrams for these valves illustrate the source for valve bonnet pressurization. In addition there are diagrams illustrating each valve's

normal operating conditions and opening conditions.

2.1 MOVs 885A, 885B

Valve Description

These are 14"x12"x14", double disc parallel seat gate valves manufactured by Anchor-Darling. These valves are located in series outside of containment in the Primary Auxiliary Building (PAB). They function as Containment Isolation Valves between the containment sump and RHR pump suction. They have no normal operating function. They have a back-up safety function to the internal recirculation pump path to facilitate external recirculation in the event the internal path becomes unavailable.

Thermal Binding

These gate valves are of the double disc, parallel seat type, therefore they need not be analyzed for Thermal Binding.

Pressure Locking

- Pressure Induced Pressure Locking

  These valves were analyzed for Pressure Induced Pressure Locking forces using equation 1. The worst case scenario is bounded by a small break LOCA. The small break LOCA scenario was evaluated for two cases. Case A is for a small break LOCA during power operation with a maximum trapped valve bonnet pressure of 150 psig. Case B is for a small break LOCA immediately following startup with a maximum trapped valve bonnet pressure of 450 psig.

- Thermal Induced Pressure Locking

  These valves are physically located in the Pipe Pen and see no changes in ambient thermal conditions when required to function, thus Thermal Induced Pressure Locking is not a concern.

Functional Evaluation

CASE A: Small Break LOCA during power operation with P_{max} = 150 psig

For Case A it is assumed that the valve downstream pipe is pressurized from performing a RHR Pump Test and pressurizes the valve bonnet to RHR Pump discharge pressure (P_m=150 psig). Since these valves are located outside of containment in the PAB, the bonnet fluid temperature will remain the PAB ambient temperature (90 degrees F). Since valves 885A/885B are located in the PAB and see no changes in ambient thermal conditions when required to function, there is no increase in valve bonnet pressure (P_h=0) due to Thermal Induced Pressure Locking ($P_{max} = P_m + P_h$ = 150 psig). When these valve are called upon to open the valve upstream pressure (P_u) is equal to containment pressure (P_u=1 psig). Note that the upstream pressure used is a conservative approach for a valve dp because at the time the valves open, containment may be at a higher pressure. The valve downstream pressure (P_d) is equal to low level RWST head pressure (P_d = 22.39 psig). Using previous MOV evaluations, the valve, operator, and motor thrust values were compared. Valve 885A/885B is limited by the operator.

Using equation 1, the available actuator thrust (T_a) is greater than the required thrust (T_r) needed to open the valve against the maximum bonnet pressure due to Pressure Locking. Therefore, Pressure Locking will not occur because there is sufficient actuator thrust to open the valve. Results are summarized in Table 1.

CASE B: Small Break LOCA immediately following startup with P_{max} = 450 psig

For Case B it is assumed that the valve downstream pipe is pressurized during startup with a RCS pressure of 450 psig. This downstream valve pipe pressure leaks into and pressurizes the valve bonnet (P_m=450 psig). Since these valves are located outside of containment in the PAB, the bonnet fluid temperature will remain the PAB ambient temperature of 90 degrees F. Since valves 885A/885B are located in the PAB and see no changes in ambient thermal conditions when required to function, there is no increase in valve bonnet pressure (P_h=0) due to Thermal Induced Pressure Locking ($P_{max} = P_m + P_h$ = 450 psig). When the valve is called upon to open the valve upstream pressure (P_u) is equal to containment pressure (P_u=1 psig). Note that the upstream pressure used is a conservative approach for a valve dp because at the time the valves open containment may be at a higher pressure. The valve downstream pressure (P_d) is equal to low level RWST head pressure (P_d = 22.39 psig). Using previous MOV evaluations, the valve, operator, and motor thrust values were compared. Valve 885A/885B is limited by the operator.

Using equation 1, the available actuator thrust (T_a) is greater than the required thrust (T_r) needed to open the valve against the maximum bonnet pressure due to Pressure Locking. Therefore, Pressure Locking will not occur because there is sufficient actuator thrust to open the valve. Results are summarized in Table 1.

MOV 885 A/B CASE A:Pm = 150 PSIG

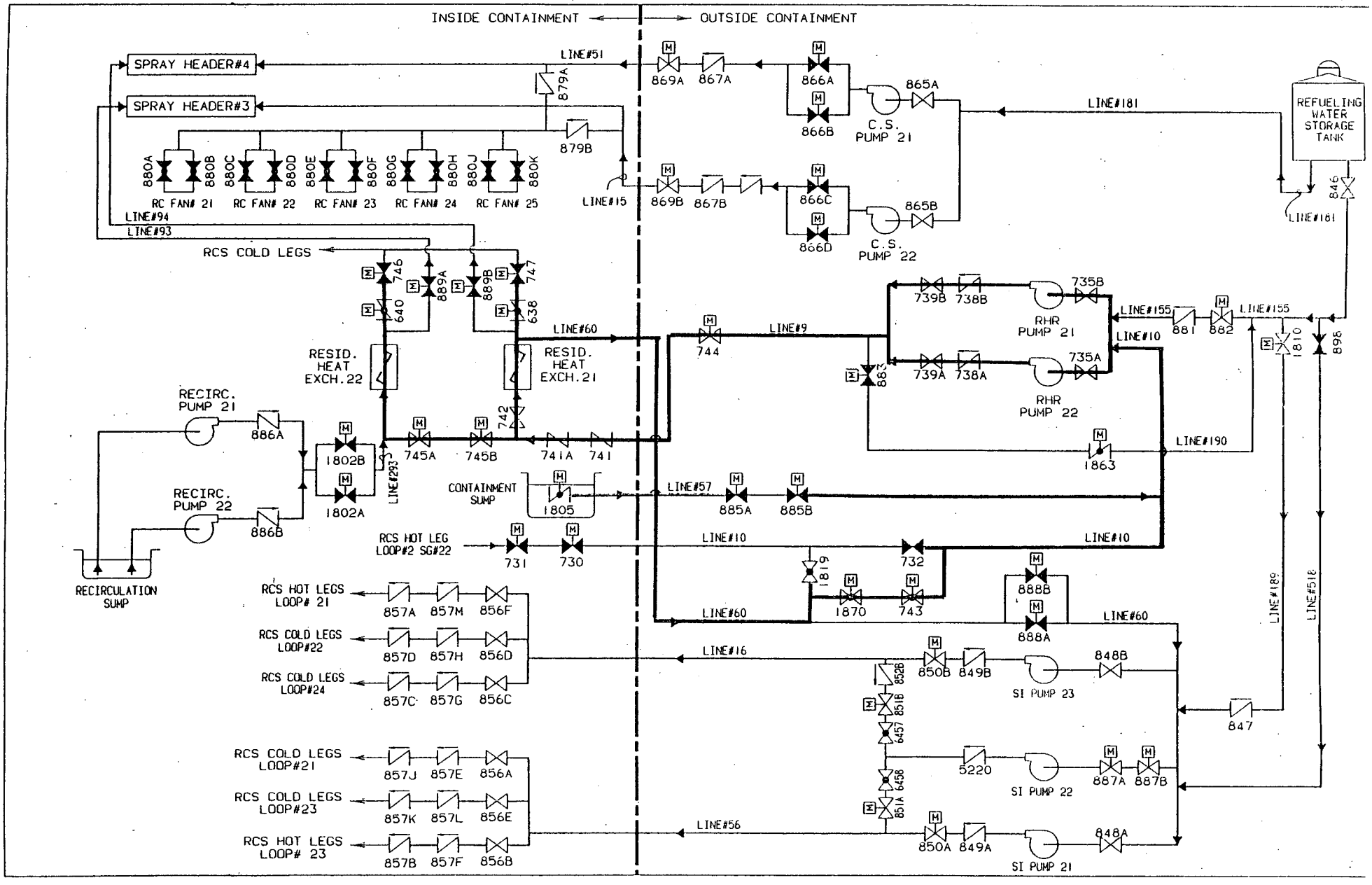

MOV 885A/885B

RWST EL. = 118.7'
MOV EL. = 38.578'

Backup Recirculation System
Case A: Small Break LOCA during power operation

Time = 0 seconds
Bonnet Fluid Temperature = 90 degrees F

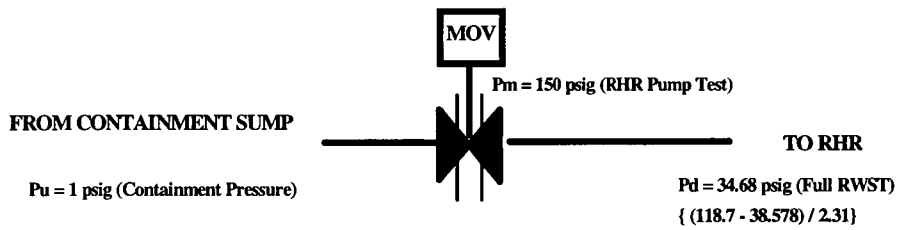

Time = 3.4 hours
Bonnet Fluid Temperature = 90 degrees F
Voltage = 100%
Pressure Induced Pressure Locking

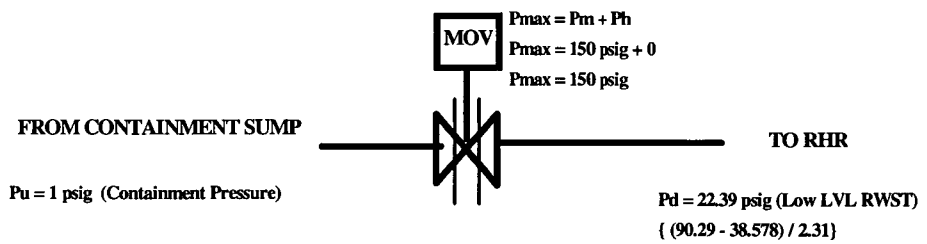

ow LVL RWST = Bottom of RWST + RWST Low LVL Alarm (Recirc Switchover Setpoint)
(90.29 = 81.05 + 9.24)
Reference Calculation No.: MPN-S65-001

MOV 885 A/B CASE B: Pm = 450 PSIG

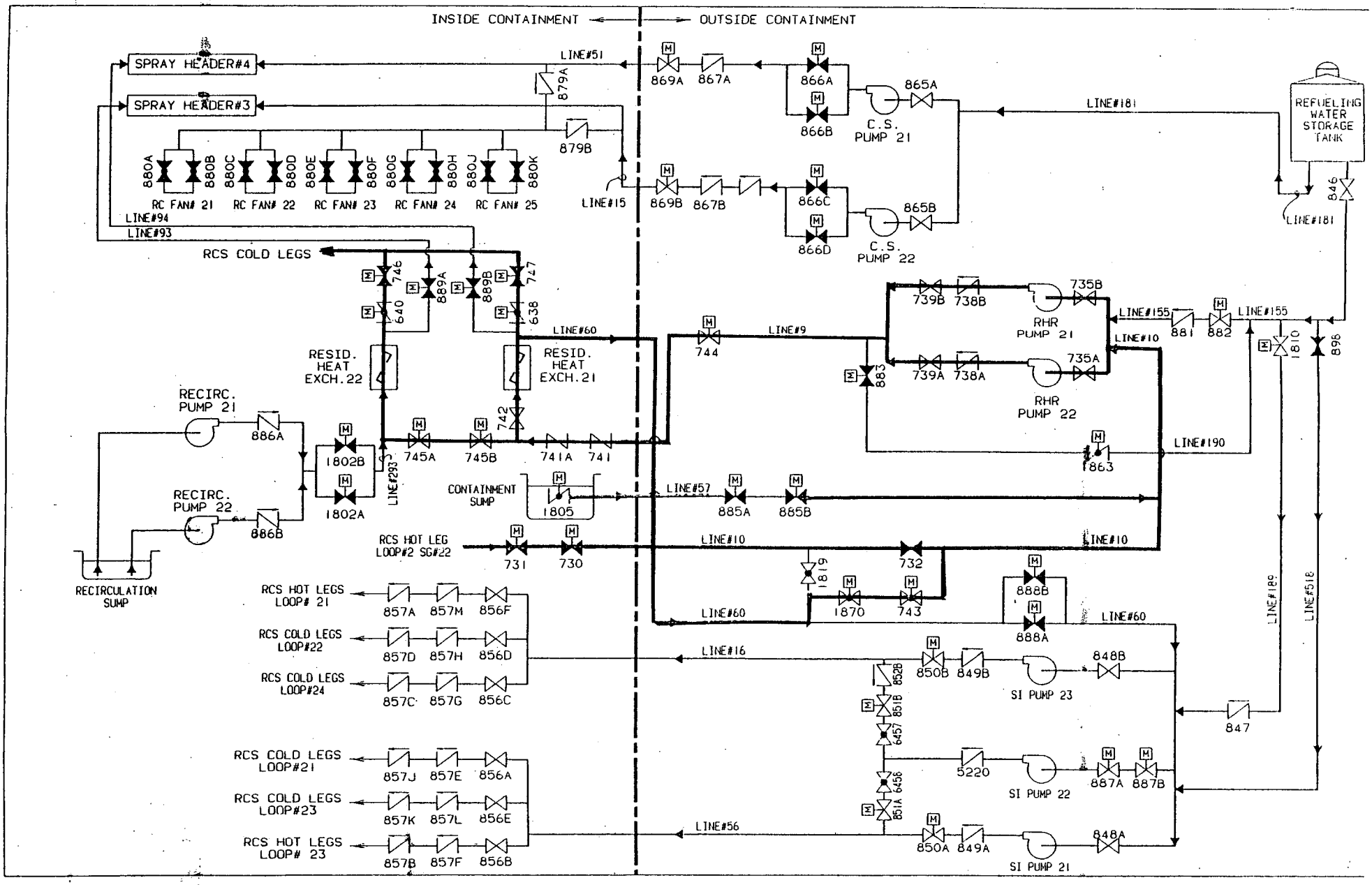

MOV 885A/885B

RWST EL. = 118.7'
MOV EL. = 38.578'

Backup Recirculation System

Case B: Small Break LOCA immediately following startup

Time = 0 seconds
Bonnet Fluid Temperature = 90 degrees F

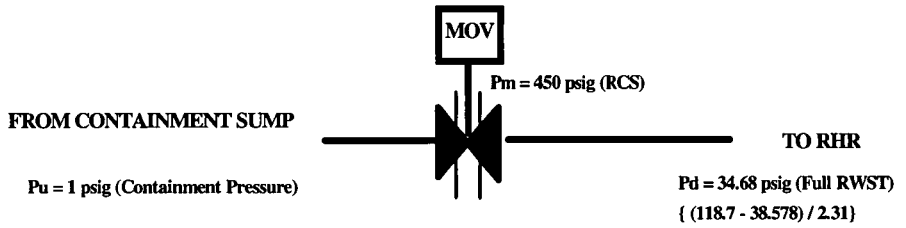

Time = 3.4 hours
Bonnet Fluid Temperature = 90 degrees F
Voltage = 100%
Pressure Induced Pressure Locking

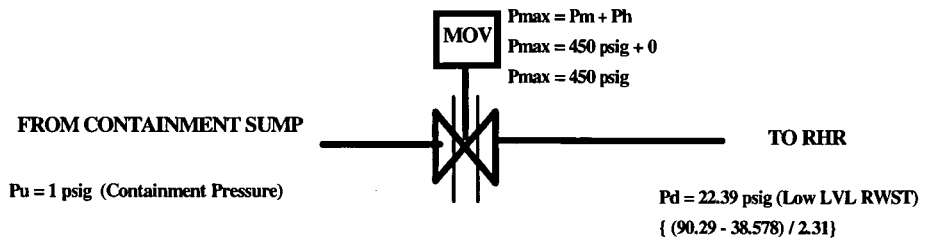

ow LVL RWST = Bottom of RWST + RWST Low LVL Alarm (Recirc Switchover Setpoint)
(90.29 = 81.05 + 9.24)
Reference Calculation No.: MPN-S65-001

2.2 MOVs 1802A, 1802B

Valve Description

These valves are 10", double disc parallel seat gate valves manufactured by Anchor-Darling. These valves are located inside of containment. These valves are in the discharge of the recirculation pumps. They are normally closed and have a safety function to open to initiate internal recirculation. They have no normal operating function.

Thermal Binding

These gate valves are of the double disc, parallel seat type, therefore they need not be analyzed for Thermal Binding.

Pressure Locking

- Pressure Induced Pressure Locking

  These valves were analyzed for Pressure Induced Pressure Locking forces using equation 1. The worst case scenario is bounded by a small break LOCA. The small break LOCA scenario was evaluated for two cases. Case A is for a small break LOCA during power operation with a maximum trapped valve bonnet pressure of 150 psig. Case B is for a small break LOCA immediately following startup with a maximum trapped valve bonnet pressure of 600 psig.

- Thermal Induced Pressure Locking

  These valves are physically located inside containment. Therefore during a small break LOCA, containment heats up. The temperature in the bonnet increases due to the higher containment temperature. Thermal Induced Pressure Locking occurs. The Tenera letter (see reference 2) contains a detailed evaluation of Thermal Induced Pressure Locking for these valves. As a result of that evaluation, insulation was added to these valves to preclude that potential.

Functional Evaluation

CASE A: Small Break LOCA during power operation with P_{max} = 150 psig

For Case A it is assumed that the valve downstream pipe is pressurized from performing a RHR Pump Test and pressurizes the valve bonnet to RHR Pump discharge pressure (P_m=150 psig). Since these valves are located inside of containment, there is an increase in bonnet fluid temperature because of the increase in containment temperature due to the accident, therefore Temperature Induced Pressure Locking occurs. The heat addition (P_h = 254 psig) to the trapped bonnet fluid causes the fluid to increase in pressure ($P_{max} = P_m + P_h$ = 404 psig). There will be a motor torque reduction due to the increase in containment ambient temperature to 225 degrees F. When the valve is called upon to open, the valve upstream pressure (P_u) is equal to the Recirculation Pump discharge pressure at shutoff (P_u=225 psig) without RHR pumps running. The valve downstream pressure (P_d) is equal to a low level RWST head pressure (P_d = 17.8 psig). Using previous MOV evaluations, the valve, operator, and motor thrust values were compared. Valve 1802A is limited by the motor and valve 1802B is limited by the operator.

Using equation 1, the available actuator thrust (T_a) is greater than the required thrust (T_r) needed to open the valve against the maximum bonnet pressure due to Pressure Locking. Therefore, Pressure Locking will not occur because there is sufficient actuator thrust to open the valve. Results are summarized in Table 1.

CASE B: Small Break LOCA immediately following startup with P_{max} = 600 psig

For Case B it is assumed that the valve downstream pipe is pressurized during startup with a RCS pressure of 450 psig plus the RHR Pump discharge pressure of 150 psig equaling 600 psig. The downstream pressure leaks into and pressurizes the valve bonnet (P_m=600 psig). Since these valves are located inside of containment, there is an increase in bonnet fluid temperature because of the increase in containment temperature due to the accident, therefore Temperature Induced Pressure Locking occurs. The heat addition (P_h = 254 psig) to the trapped bonnet fluid causes the fluid to increase in pressure (P_{max} = P_m + P_h = 854 psig). There will be a motor torque reduction due to the increase in containment ambient temperature to 225 degrees F. When these valves are called upon to open the valve upstream pressure (P_u) is equal to the Recirculation Pump discharge pressure at shutoff (P_u=225 psig) without RHR pumps running. The valve downstream pressure (P_d) is equal to a low level RWST head pressure (P_d = 17.8 psig). Using previous MOV evaluations, the valve, operator, and motor thrust values were compared. Valve 1802A is limited by the motor and valve 1802B by the operator.

Using equation 1, the available actuator thrust (T_a) is greater than the required thrust (T_r) needed to open the valve against the maximum bonnet pressure due to Pressure Locking. Therefore, Pressure Locking will not occur because there is sufficient actuator thrust to open the valve. Results are summarized in Table 1.

MOV 1802 A/B CASE A:Pm = 150 PSIG

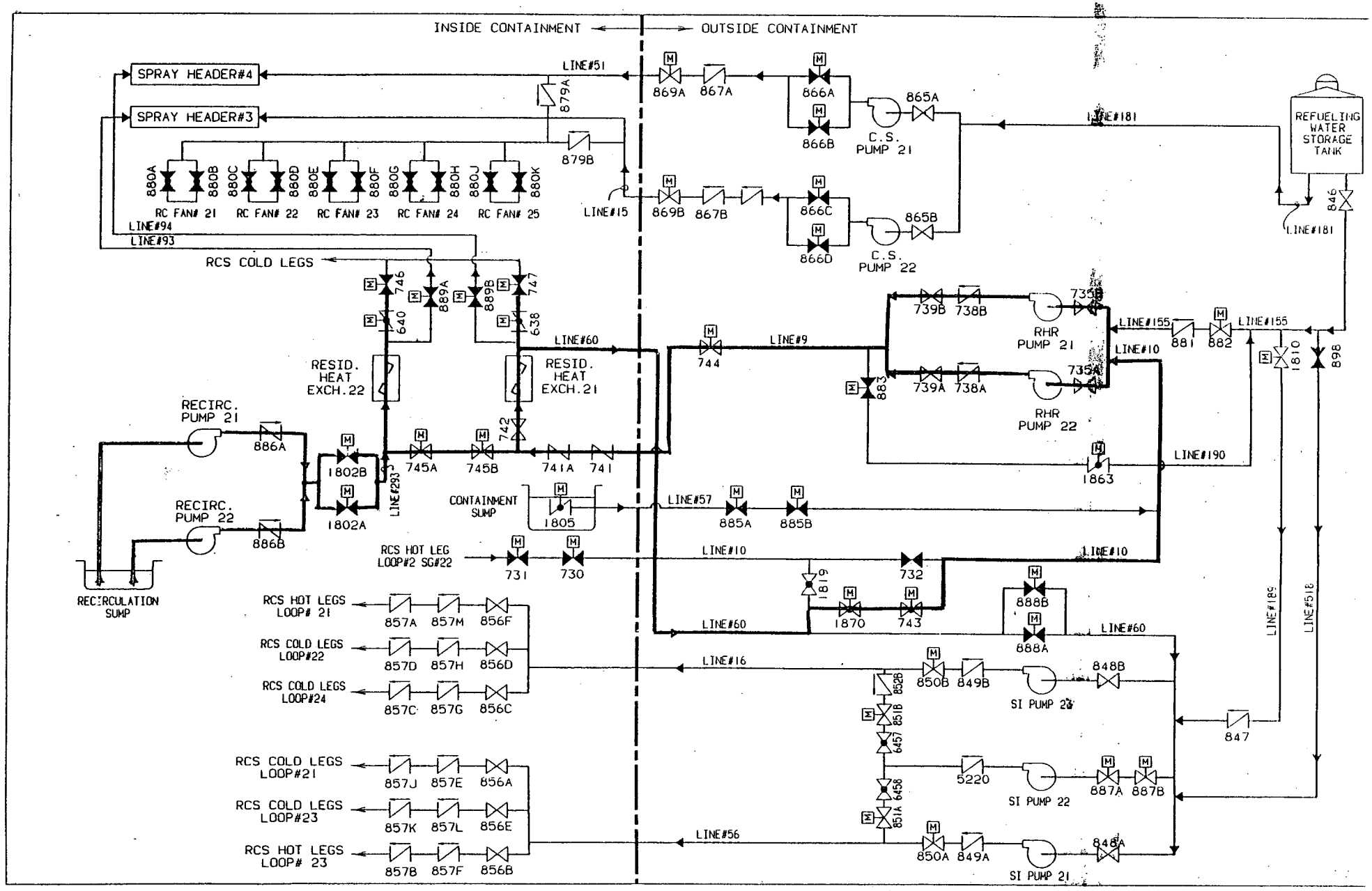

MOV 1802A/1802B

RWST EL. = 118.7'
MOV EL. = 49.167'

Case A: Small Break LOCA during power

Time = 0 seconds
Bonnet Fluid Temperature = 90 degrees F

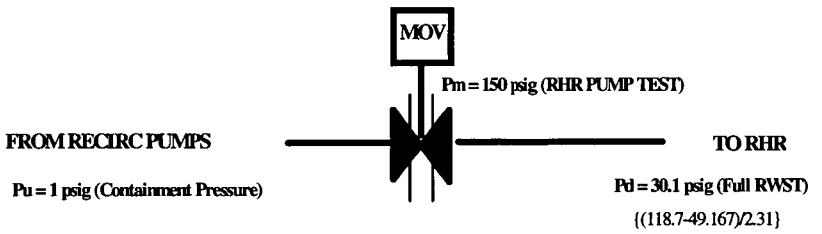

Time = 3.4 hours
Bonnet Fluid Temperature = 97.7 degrees F (7.7 degree F heat addition ~ 254 psig)
Voltage = 100%
Pressure and Thermal Induced Pressure Locking

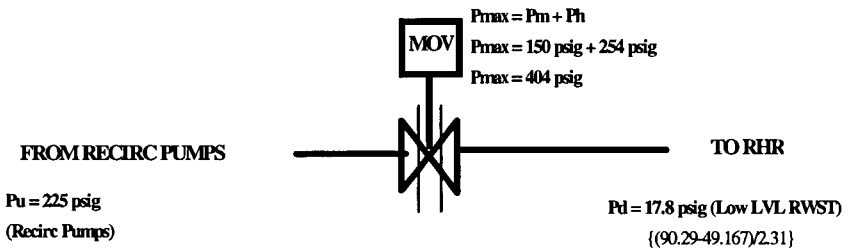

Low LVL RWST = Bottom of RWST + RWST Low LVL Alarm (Recirc Switchover Setpoint)
(90.29 = 81.05 + 9.24)
Reference Calculation No.: MPN-S65-001

MOV 1802 A/B CASE B: Pm = 600 PSIG

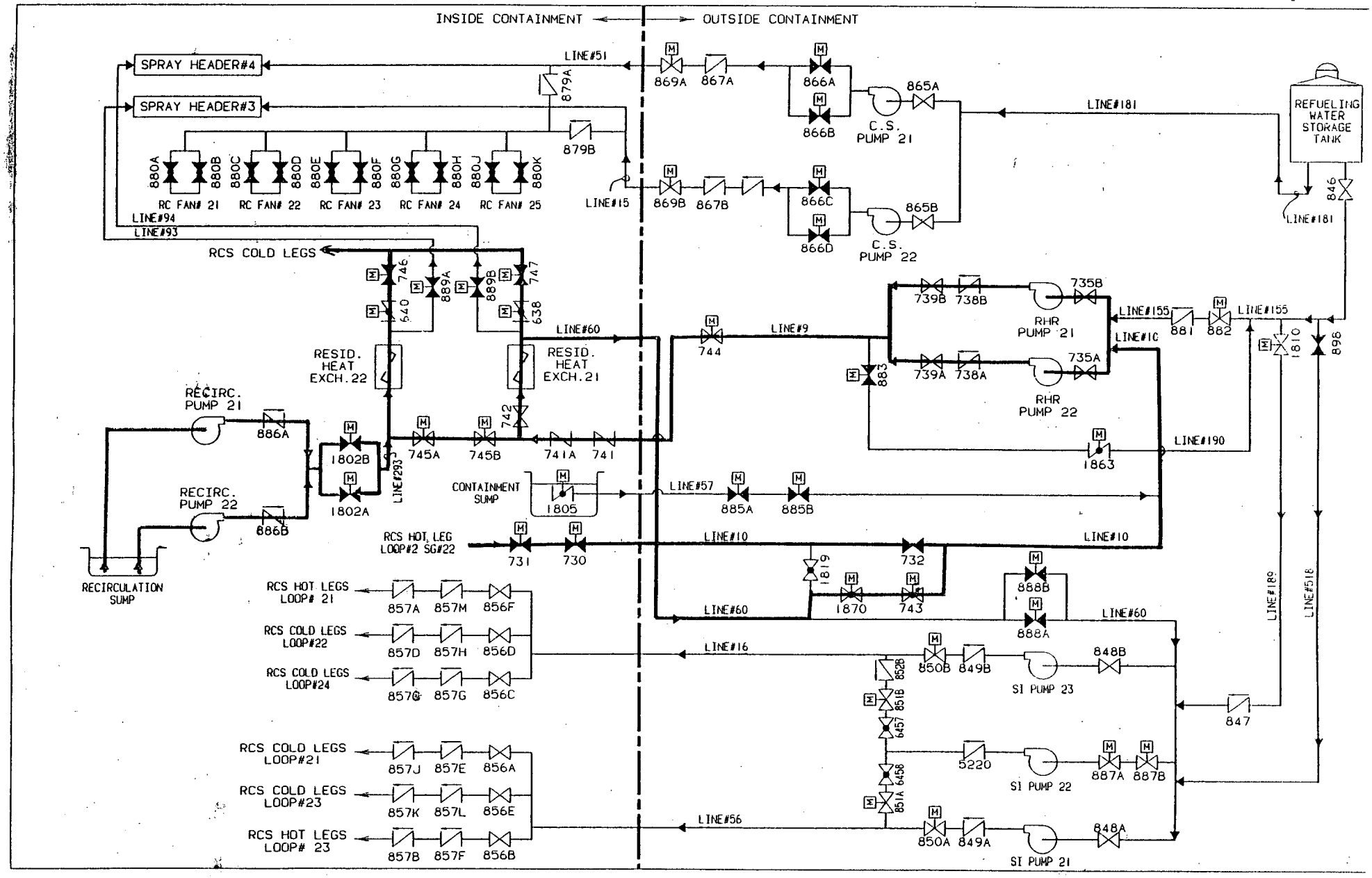

MOV 1802A/1802B

RWST EL. = 118.7'
MOV EL. = 49.167'

Case B: Small Break LOCA immediately following a startup

Time = 0 seconds
Bonnet Fluid Temperature = 90 degrees F

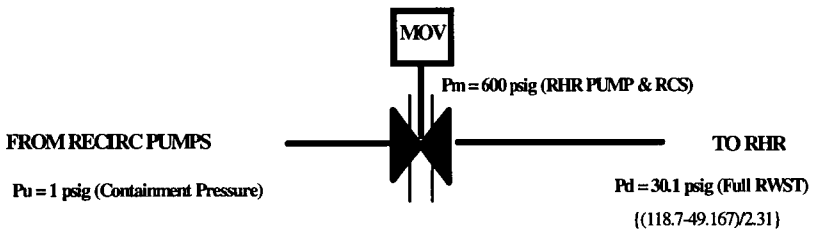

Time = 3.4 hours
Bonnet Fluid Temperature = 97.7 degrees F (7.7 degree F heat addition ~ 254 psig)
Voltage = 100%
Pressure and Thermal Induced Pressure Locking

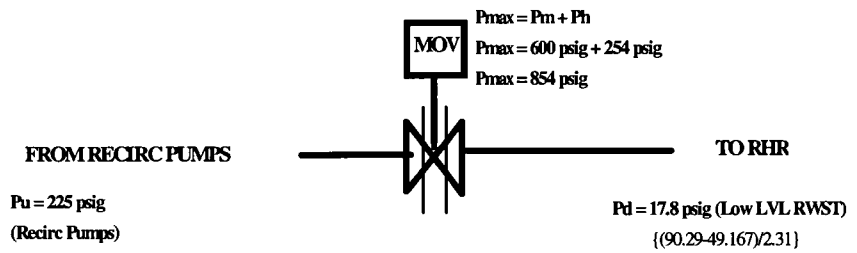

Low LVL RWST = Bottom of RWST + RWST Low LVL Alarm (Recirc Switchover Setpoint)
(90.29 = 81.05 + 9.24)
Reference Calculation No.: MPN-S65-001

2.3 MOVs 746, 747

Valve Description

These valves are 8", double disc parallel seat gate valves manufactured by Anchor-Darling. These valves are located inside containment. They are outlet isolation valves for the RHR heat exchangers. These valves are normally closed and have a normal function to open to facilitate decay heat removal via the RHR system for shutdown operations. They also have a safety function to open to provide an injection path to the core following any accident or transient that generates an SI signal and requires injection flow.

Thermal Binding

These gate valves are of the double disc, parallel seat type, therefore they need not be analyzed for Thermal Binding.

Pressure Locking

These valves are normally closed (for Event V risk reduction) and separated from the RCS by redundant series check valves that are leak tested per Technical Specifications prior to start-up and whenever RCS pressure is reduced to 700 psig. Experience indicates minimal leakage from these check valves. Leakage from these check valves can cause Pressure Locking to occur.

Pressure Induced Pressure Locking

These valves were analyzed for Pressure Induced Pressure Locking forces using equation 1. For valves 746/747, the maximum bonnet pressure would occur if 897 and 838 series check valves leaked through and pressurized the valve downstream piping. If the RCS depressurized to the SI setpoint, 746/747 will receive a SI signal to open. The worst case scenario is bounded by a large break LOCA. The large break LOCA scenario was evaluated for two cases. Case A is for a large break LOCA with offsite power and degraded voltage. Case B is for a large break LOCA without offsite power and full EDG voltage.

To ensure that the large break LOCA is the bounding case, a small break LOCA was also reviewed. The scenario that governs the requirement for valves 746/747 is as follows: For a small break LOCA, the SI signal will call for the valves to open, as in the large break LOCA, however, the pressure transient in the RCS is no worse than (expected to depressurize slower) the large break LOCA. For the small break LOCA, 746/747 may be reclosed by action of the recirculation switches to direct sump fluid to the High Head SI pump suction. The worst case RCS pressure is assumed to stabilize near the shutoff head of the High Pressure Safety Injection pumps (1500 psig). The 1500 psig RCS pressure is assumed to be trapped in the valve bonnet. RCS pressure is assumed to have decayed to zero (P_d), and upstream pressure (P_u) of 150 psig is available from the RHR pumps (225 psig from the Recirculation pumps). If valves 746/747 are called upon to reopen in this case to use cold leg low head injection paths, Pressure Locking has to be evaluated. This case was found not to be bounding for PLTB because the differential pressure that the valve would open against is lower than the large break LOCA and there is full bus voltage available. There is also no bonnet heating component since containment temperature is decreasing from the time of pressurization to the time of reopening.

A similar large break LOCA case was also evaluated. Twenty-four hours after the accident while on recirculation, a change to High Head SI pump recirculation is desired to minimize the chance for boron precipitation in the reactor. This may involve closing 746/747 to direct flow to the High Head SI pump suction. After an additional twenty-four hours, low head recirculation may be reestablished requiring reopening of 746/747. This case was also found not to be bounding for the same reasons discussed above for the small break LOCA.

Thermal Induced Pressure Locking

Thermal Induced Pressure Locking can not occur in these valves. In the event of LOCA, valves 746/747 open immediately on a SI signal, therefore there is insufficient time for the trapped fluid in the valve bonnet to heat-up.

Functional Evaluation

CASE A: Large Break LOCA with Offsite Power and Degraded Voltage

For Case A it is assumed that check valves 897 and 838 leak through and pressurize the valve bonnet to RCS pressure (P_m=2235 psig). Since these valves are located inside of containment the bonnet fluid temperature will reach the containment ambient temperature of 90 degrees F. The 90 degree F containment and bonnet fluid temperature is selected to conservatively maximize the bonnet heating contribution to the differential pressure the actuator must overcome. Upon receipt of a SI signal these valves will open immediately, the motor will draw a degraded voltage, because the unit will be on offsite power. Bus voltage studies show that a motor terminal voltage of 72% is available with offsite power. Valves 746/747 open immediately on a SI signal (t = 1 second), therefore there is insufficient time for the trapped fluid in the valve bonnet to heat-up and there is no increase in bonnet pressure (P_h=0) due to Thermal Induced Pressure Locking ($P_{max} = P_m + P_h$ = 2235 psig). When the valve is called upon to open the valve upstream pressure (P_u) is equal to a full RWST head (P_u=22.5 psig) without RHR pumps running. The valve downstream pressure (P_d) is equal to or greater than the RCS pressure (P_d = 1600 psig) at the time of the open signal. Using the previous MOV evaluations, the valve, operator, and motor thrust values were compared. Valve 746/747 is limited by the motor at the 130 degree Fahrenheit, maximum containment temperature. This is the maximum containment temperature permitted during normal power operation and results in conservatism by maximizing the high ambient temperature torque reducing factor applicable to the motor.

From the analysis, the available actuator thrust (T_a) is greater than the required thrust (T_r) needed to open the valve against the maximum bonnet pressure due to Pressure Locking. Therefore, Pressure Locking will not occur because there is sufficient actuator thrust to open the valve. Results are summarized in Table 1.

CASE B: Large Break LOCA without Offsite Power and Full EDG Voltage

For Case B it is assumed that check valves 897 and 838 leak through and pressurize the valve bonnet to RCS pressure (P_m=2235 psig). Since these valves are located inside of containment the bonnet fluid temperature will reach the containment ambient temperature of 90 degrees F. Without offsite power the EDGs are required to start and provide power at full voltage to the Vital Buses of the plant (t = 10 seconds). Upon receipt of a SI signal (t = 1 second) and available power to the motor, the valves will open. Valves 746/747 open at t = 11 seconds, therefore, there is insufficient time for the trapped fluid in the valve bonnet to heat-up and there is no increase in bonnet pressure (P_h=0) due to Thermal Induced Pressure Locking ($P_{max} = P_m + P_h$ = 2235 psig). When the valve is called upon to open the valve upstream pressure (P_u) is equal to a full RWST head (P_u=22.5 psig) without the RHR pumps running. The valve downstream pressure (P_d) is equal to or greater than the RCS pressure (P_d = 800 psig) at the time of the open signal. Using the previous MOV evaluations, the valve, operator, and motor thrust values were compared. Valve 746/747 is limited by the motor at 130 degree Fahrenheit.

Using equation 1, the available actuator thrust (T_a) is greater than the required thrust (T_r) needed to open the valve against the maximum bonnet pressure due to Pressure Locking. Therefore, Pressure Locking will not occur because there is sufficient actuator thrust to open the valve. Results are summarized in Table 1.

From experience, these valves have demonstrated their ability to operate under these conditions each time they are opened to facilitate entry to RHR conditions, accordingly Pressure Locking is not expected.

MOV 746/747 CASE A/B: Pm = 2235 PSIG

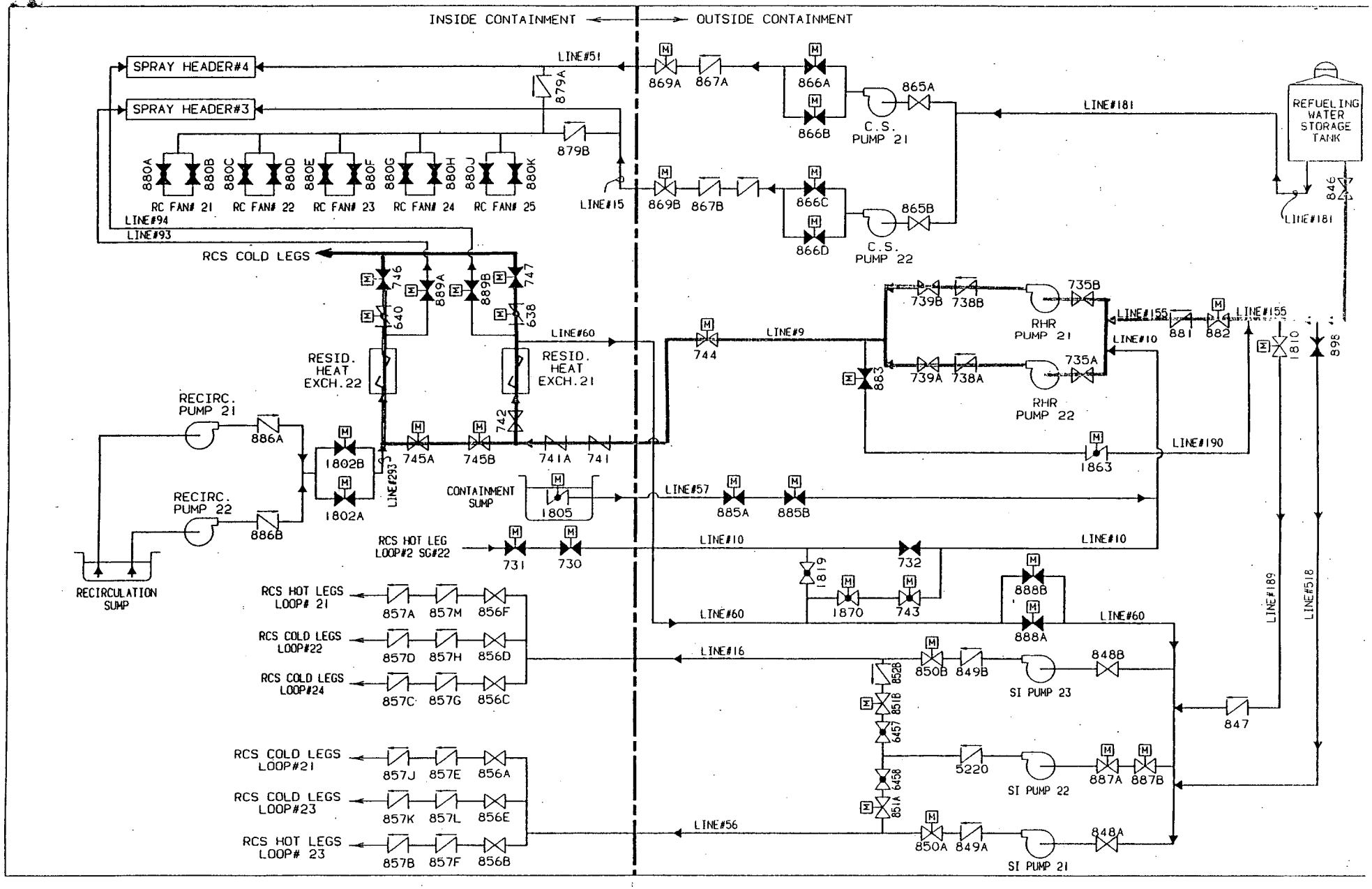

MOV 746/747

RWST EL. = 118.7'
MOV EL. = 66.75'

Case A: Large Break LOCA with offsite power and degraded voltage.

Time = 0 seconds

Bonnet Fluid Temperature = 90 degrees F

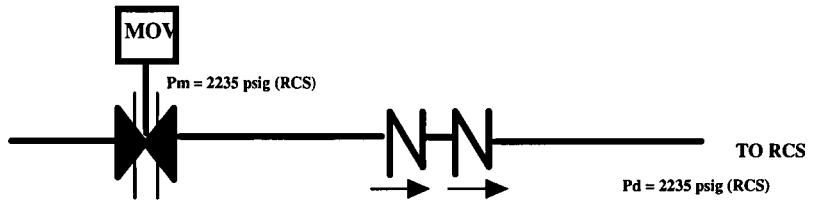

Time = 1 seconds

Bonnet Fluid Temperature = 90 degrees F

Valve opens on SI signal

Degraded Voltage = 72%

Pressure Induced Pressure Locking

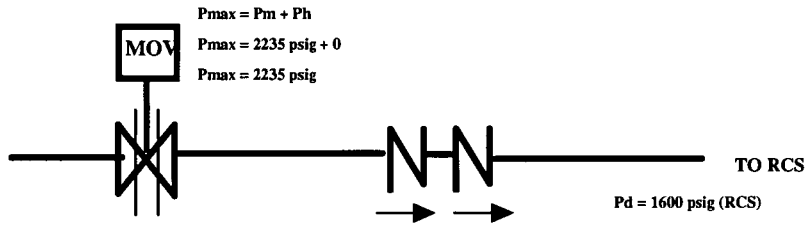

(from UFSAR Fig.14.3-26)

Case B: Large Break LOCA without offsite power and full EDG voltage.

Time = 0 seconds

Bonnet Fluid Temperature = 90 degrees F

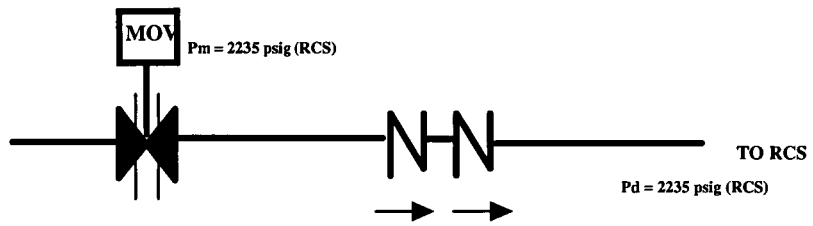

Time = 11 seconds

Bonnet Fluid Temperature = 90 degrees F

Valve opens on SI signal

Voltage = 100%

Pressure Induced Pressure Locking

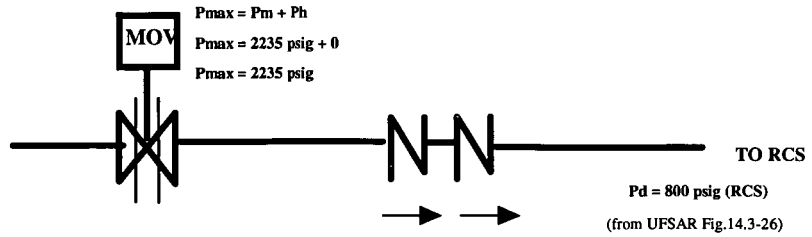

(from UFSAR Fig.14.3-26)

3) REQUEST

The NRC staff believes that valves 535, 536, PORV block valves, may be susceptible to pressure locking and thermal binding. Please provide your specific pressure locking and thermal binding evaluations for these valves, including calculations, for our review.

RESPONSE

MOVs 535, 536

Valve Description

These valves are 3", flexible wedge gate valves manufactured by Westinghouse. These valves are located inside of containment. These valves serve as PORV block valves. They are normally open during power operation however they may be closed to isolate a leaking series PORV.

Functional Evaluation

These valves are not required to function during any Design Basis Accident Analysis. See reference letter, Indian Point's "Response to Generic Letter 90-06," Docket No. 50-247, dated December 21, 1990 and reference letter, NRC's "Review of Response to Generic Letter 90-06, Docket No. 50-247, dated June 2,1994. Accordingly, analysis for Pressure Locking and Thermal Binding are not required for these valves (These valves are optionally maintained in the G/L 89-10 Program Plan).

4) REQUEST

Through review of operational experience feedback, the staff is aware of instances where licensees have completed design or procedural modifications to preclude pressure locking or thermal binding which may have had an adverse impact on plant safety due to incomplete or incorrect evaluation of the potential effects of these modifications. Please describe evaluations and training for plant personnel that have been conducted for each design or procedural modification completed to address potential pressure locking or thermal binding concerns.

RESPONSE

No design or procedural modifications to preclude pressure locking or thermal binding have been made. Therefore no evaluations or training for plant personnel have been conducted.

REFERENCES

1. Evaluation of G/L 89-10 MOVs for Pressure Locking and Thermal Binding (Calc. No. MEX-00131-00)," dated April 1995. This evaluation was reviewed by NRC as documented in US NRC IE Inspection Report 95-04, dated 5/4/95.

2. Tenera's Letter, "Indian Point Unit 2 Valve 1802," dated April 11, 1995.

3. EPRI NP-6516, "Guide for the Application and Use of Valves in Power Plant Systems," dated August 1990.

4. Indian Point Unit No. 2 Letter to USNRC, Docket No. 50-247, "Response to Generic Letter 90-06, "Resolution of Generic Issue 70, 'Power Operated Relief Valve and Block Valve Reliability,' and Generic Issue 94, 'Additional Low-Temperature Overpressure Protection for Light-Water Reactors' "," dated December 21,1990.

5. USNRC Letter to IP2, Docket No. 50-247, "Review of Response to Generic Letter 90-06,

"Resolution of Generic Issue 70, 'Power-Operated Relief Valve and Block Valve Reliability,' and Generic Issue 94, 'Additional Low-Temperature Overpressure Protection for Light-Water Reactors,' Pursuant to 10CFR50.54 (f)" - Indian Point Nuclear Generating Unit No. 2 (TAC NOS. M77355/M77425)," dated June 2, 1994.

REFERENCES 2, 4, 5

REFERENCES 2, 4, 5

TENERA

April 11, 1995

Mr. Jeff Lomm
Consolidated Edison Company
of New York, Inc.
Room 1075S
4 Irving Place
New York, NY 10003

Subject: Indian Point Unit 2 Valve 1802

Dear Mr. Lomm:

Provided below is an evaluation that estimates the average temperature of water in the bonnet of valve 1802 under 4 inch LOCA conditions. The evaluation estimates an average water temperature of 97.7 F. If you have any questions about this evaluation, please feel free to call me at (301) 294-3740 or Jude at (516) 737-5075.

Problem Statement

This evaluation is postulating that motor operated valve 1802 is subjected to the containment environment resulting from a 4 inch Loss of Coolant Accident (LOCA). It is postulated that valve stem leakage on valve 1802 has filled the bonnet with water. If the water increases in temperature, the pressure will also increase, potentially causing the valve to not operate properly. This condition was previously analyzed for valve 1802 assuming a large break LOCA in Appendix G of the TENERA Report titled "Evaluation of Susceptibility of Power Operated Gate Valves to Pressure Locking and Thermal Binding." The results of the previous analysis will be used to estimate a conservative average temperature of the water in the valve bonnet. The temperatures used below are identified in the attached results data from the previous analysis.

Assumptions

The valve is assumed to have reached steady state temperature conditions.

The small break LOCA recirculation switch over time is 3.4 hours.

The temperature result at 12,397 seconds is a reasonable approximation of the temperature at 12,240 seconds (3.4 hours).

1901 Research Boulevard, Suite 100, Rockville, Maryland, 20850-3164, (301) 294-3740, FAX: (301) 294-3755

TENERA

Conservatisms

There are major conservatisms in the following evaluation. The most significant conservatism is the use of data from the large break LOCA analysis. The large break LOCA temperature profile is much more severe than the temperature profile resulting from the 4 inch LOCA. The large break containment temperature rises rapidly from initial conditions to 250 F in about 20 seconds. The peak containment temperature reached for a large break is 261 F. The 4 inch break containment temperature requires 100 seconds to rise from initial conditions to 200 F and the peak temperature is only 224 F.

The other major conservatism is the assumption of steady state conditions in the valve bonnet. The estimation of water temperature below assumes a linear temperature gradient from the bonnet to the valve stem. However, the previous analysis of valve 1802 indicates that steady state conditions are not achieved during the analysis period. The temperature profile under transient conditions would have a steeper gradient near the bonnet and a flatter gradient near the valve stem. Thus, assuming steady state conditions causes a higher estimate of the average water temperature than would occur in the transient environment.

Other minor conservatisms include neglecting the temperature gradient across the bonnet metal, the assumption of a spherical model, and the two element model. Each of the conservatisms discussed contribute to a conservative estimate of the bonnet average water temperature.

Estimation of Temperature

The evaluation model is based on Figure 2 of Appendix G to the TENERA Report. The figure is reproduced below for reference. The evaluation model is composed of two concentric spherical shells to represent the water inside the bonnet. The inner shell has an inside radius of 0.75 inches and an outer radius of 2.7 inches. The outer shell has an inside radius of 2.7 inches and an outer radius of 4.65 inches. The volume of the inner shell is:

$$\frac{4}{3}\pi\,(2.7)^3 - \frac{4}{3}\pi\,(0.75)^3 = 80.7\ inch^3$$

The volume of the outer shell is:

$$\frac{4}{3}\pi\,(4.65)^3 - \frac{4}{3}\pi\,(2.7)^3 = 338.7\ inch^3$$

TENERA

Mr. Jeff Lomm
April 11, 1995
Page 3

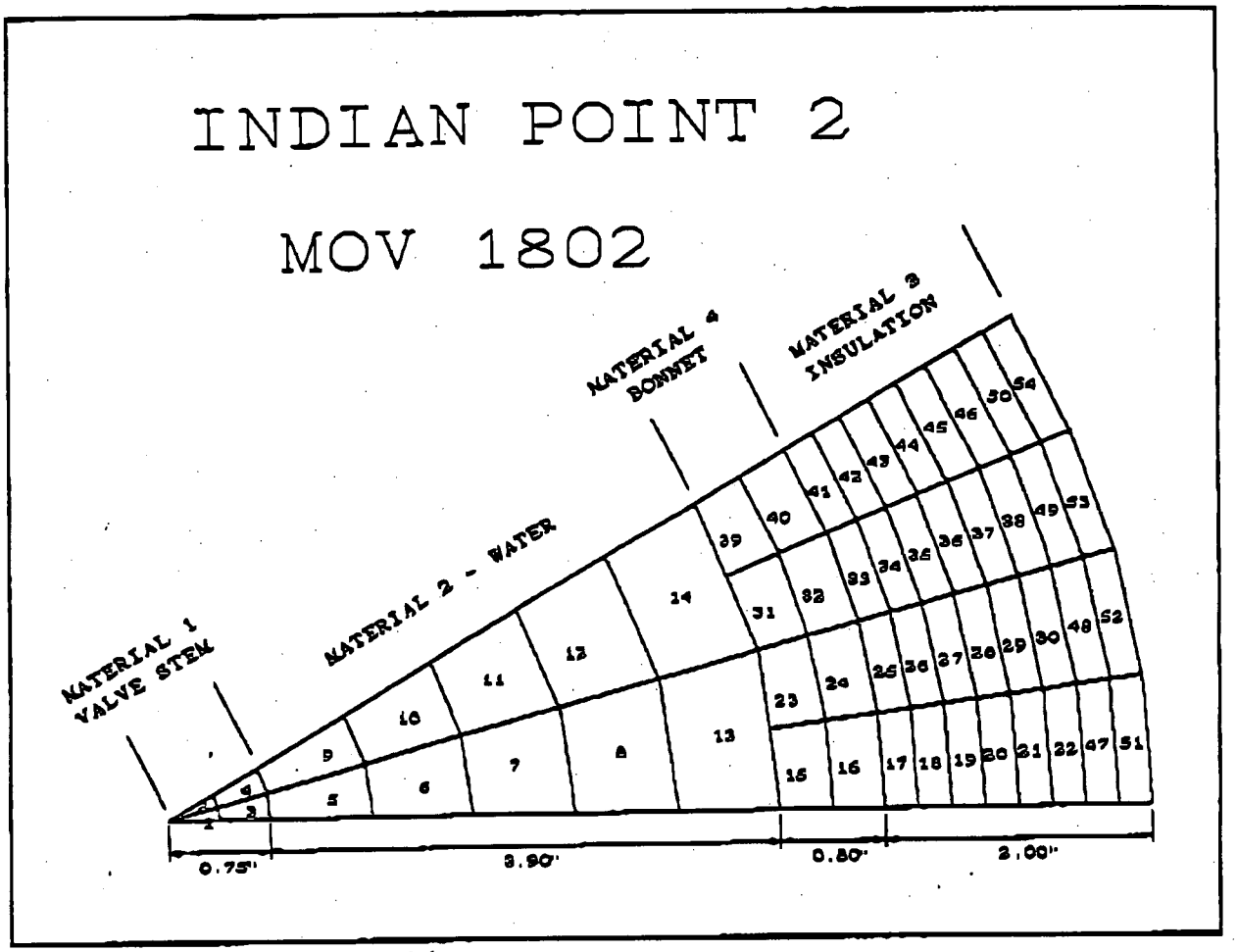

MOV-1802 Finite Element Model

The total volume of water in the model is 80.7 + 338.7 = 419.4 inches^3.

Temperatures are obtained from the Appendix G results data for the "Thermal Analysis of Motor-Operated Gate Valves 889A, B and 1802." Temperatures at the assumed small break switch over time of 3.4 hours are used (12,240 seconds). The temperature at the midpoint of each shell is determined by linear interpolation. The temperature at radius 4.65 inches is 101 F and the temperature at radius 0.75 inches is 91.4 F. The midpoint of the inner shell is 1.725 inches and by interpolation the temperature is 93.8 F. The midpoint radius of the outer shell is 3.675 inches and by interpolation the temperature is 98.6 F.

TENERA

Mr. Jeff Lomm
April 11, 1995
Page 4

Sufficient data is now developed to determine the volume averaged temperature for the bonnet water.

$$93.8\ \left(\frac{80.7}{419.4}\right) + 98.6\ \left(\frac{338.7}{419.4}\right) = 97.7\ F$$

A conservative estimate of the average water temperature in the valve 1802 bonnet under 4 inch LOCA conditions is 97.7 F.

Yours truly,

Benjamin Beasley

Benjamin Beasley, P.E.
Project Manager

Attachment: MOV-1802 RESULTS

MOV-1802 RESULTS

ANSYS POST26 VARIABLE LISTING

TIME	DISP 1 TEMP	DISP 32 TEMP	DISP 52 TEMP	DISP 72 TEMP
	1 TEMP	32 TEMP	52 TEMP	72 TEMP
00000E+00	90.0000	90.0000	90.0000	90.0000
1.0000	90.0000	90.0000	90.0000	101.143
2.0000	90.0000	90.0000	90.0000	115.611
3.0000	90.0000	90.0000	90.0000	130.241
5.0000	90.0000	90.0000	90.0000	159.043
7.0000	90.0000	90.0000	90.0000	187.743
10.000	90.0000	90.0000	90.0001	230.811
11.000	90.0000	90.0000	90.0001	235.001
12.000	90.0000	90.0000	90.0002	236.916
13.000	90.0000	90.0000	90.0002	238.532
14.000	90.0000	90.0000	90.0003	240.228
17.000	90.0000	90.0000	90.0007	245.463
22.000	90.0000	90.0000	90.0024	254.209
23.000	90.0000	90.0000	90.0029	254.445
24.000	90.0000	90.0000	90.0035	254.380
25.000	90.0000	90.0000	90.0042	254.262
29.000	90.0000	90.0000	90.0078	253.838
36.000	90.0000	90.0000	90.0196	253.111
44.000	90.0000	90.0000	90.0443	252.277
50.000	90.0000	90.0000	90.0725	251.650
51.000	90.0000	90.0000	90.0781	251.650
55.000	90.0000	90.0000	90.1034	251.733
65.000	90.0000	90.0000	90.1903	251.954
76.000	90.0000	90.0000	90.3296	252.192
88.000	90.0000	90.0000	90.5392	252.449
100.00	90.0000	90.0000	90.8127	252.704
101.00	90.0000	90.0000	90.8384	252.720
105.00	90.0000	90.0000	90.9458	252.778
120.00	90.0000	90.0000	91.4149	252.993
137.00	90.0000	90.0001	92.0685	253.235
155.00	90.0000	90.0001	92.8928	253.489
175.00	90.0000	90.0002	93.9521	253.768
198.00	90.0000	90.0005	95.3300	254.087
224.00	90.0000	90.0010	97.0540	254.446
253.00	90.0000	90.0018	99.1337	254.844
287.00	90.0000	90.0034	101.713	255.308
326.00	90.0000	90.0063	104.776	255.839
371.00	90.0000	90.0113	108.353	256.449
420.00	90.0000	90.0191	112.216	257.111
475.00	90.0000	90.0314	116.434	257.853
537.00	90.0000	90.0500	120.983	258.687
607.00	90.0000	90.0773	125.820	259.628
687.00	90.0000	90.1170	130.952	260.701
700.00	90.0000	90.1243	131.746	260.875
701.00	90.0000	90.1249	131.806	260.867
705.00	90.0000	90.1272	132.048	260.815
721.00	90.0000	90.1366	133.005	260.604
785.00	90.0000	90.1778	136.671	259.758
862.00	90.0000	90.2344	140.742	258.740
956.00	90.0000	90.3133	145.218	257.494
1000.0	90.0000	90.3537	147.130	256.911
1001.0	90.0000	90.3546	147.173	256.898
1005.0	90.0000	90.3584	147.340	256.851
1021.0	90.0000	90.3737	148.002	256.660
1085.0	90.0000	90.4374	150.507	255.895
1211.0	90.0000	90.5733	154.825	254.390
1346.0	90.0000	90.7318	158.652	252.776
1493.0	90.0000	90.9163	162.017	251.018
1653.0	90.0000	91.1275	164.885	249.103
1828.0	90.0001	91.3667	167.243	247.008
2000.0	90.0001	91.6065	168.915	244.947
2001.0	90.0001	91.6079	168.923	244.939

2005.0	90.0001	91.6135	168.954	244.907
2021.0	90.0001	91.6360	169.076	244.779
2085.0	90.0002	91.7262	169.524	244.267
[illegible]37.0	90.0004	92.0800	170.798	242.254
[illegible]1.0	90.0008	92.4724	171.532	239.985
[illegible]49.0	90.0018	92.9125	171.736	237.364
3000.0	90.0021	92.9796	171.711	236.956
3001.0	90.0021	92.9809	171.711	236.956
3005.0	90.0021	92.9861	171.708	236.962
3021.0	90.0021	93.0071	171.697	236.989
3085.0	90.0024	93.0904	171.647	237.094
3238.0	90.0033	93.2867	171.512	237.348
3463.0	90.0049	93.5679	171.360	237.722
3600.0	90.0062	93.7349	171.312	237.950
3601.0	90.0062	93.7361	171.312	237.948
3605.0	90.0062	93.7409	171.311	237.939
3621.0	90.0064	93.7602	171.308	237.899
3685.0	90.0071	93.8370	171.302	237.739
3913.0	90.0100	94.1056	171.302	237.170
4282.0	90.0166	94.5261	171.260	236.249
4940.0	90.0358	95.2372	170.993	234.605
6080.0	90.0996	96.3687	170.200	231.756
7200.0	90.2080	97.3740	169.225	228.958
7201.0	90.2081	97.3749	169.224	228.955
7205.0	90.2086	97.3783	169.220	228.942
7221.0	90.2105	97.3919	169.205	228.894
7285.0	90.2181	97.4461	169.144	228.698
7541.0	90.2504	97.6602	168.892	227.916
8561.0	90.4083	98.4728	167.764	224.801
10505.	90.8333	99.8618	165.324	218.864
10800.	90.9119	100.055	164.928	217.963
10801.	90.9122	100.056	164.927	217.962
10805.	90.9133	100.058	164.921	217.960
[illegible]0821.	90.9176	100.069	164.899	217.951
[illegible]885.	90.9352	100.110	164.813	217.915
[illegible]1141.	91.0072	100.273	164.498	217.772
11621.	91.1488	100.572	164.076	217.505
12397.	91.3953	101.041	163.723	217.074
13567.	91.8033	101.725	163.534	216.424
14400.	92.1175	102.200	163.502	215.962

Stephen B. Bram
Vice President

Consolidated Edison Company of New York, Inc.
Indian Point Station
Broadway & Bleakley Avenue
Buchanan, NY 10511
Telephone (914) 737-8116

December 21, 1990

Re: Indian Point Unit No. 2
Docket No. 50-247

Document Control Desk
US Nuclear Regulatory Commission
Mail Station P1-137
Washington, DC 20555

SUBJECT: Response to Generic Letter 90-06, "Resolution of Generic Issue 70, 'Power-Operated Relief Valve and Block Valve Reliability,' and Generic Issue 94, 'Additional Low-Temperature Overpressure Protection for Light-Water Reactors'"

This letter is in response to the subject generic letter dated June 25, 1990, which suggested several specific actions to improve the reliability of Power-Operated Relief Valves (PORVs) and their block valves. These actions involve quality assurance, maintenance and testing programs, and modifications to technical specifications.

Many of the suggested actions are already in existence for the PORVs at Indian Point Unit No. 2 and we will continue to maintain the programs. At this time, we do not believe it is necessary to modify the Technical Specifications as suggested in the generic letter. Pursuant to Section 182 of the Atomic Energy Act and 10 CFR 50.54(f), detailed responses to the suggestions presented in the generic letter are provided in the attachment.

Should you or your staff have any questions regarding this matter, please contact Mr. Charles W. Jackson, Manager, Nuclear Safety and Licensing.

Very truly yours,

Subscribed and sworn to
before me this 21st day
of December, 1990.

Karen L. Lancaster
Notary Public

KAREN L. LANCASTER
Notary Public, State of New York

9101020332 7

000157

cc: Mr. Thomas T. Martin
Regional Administrator - Region I
US Nuclear Regulatory Commission
475 Allendale Road
King of Prussia, PA 19406

Mr. Francis J. Williams Jr., Project Manager
Project Directorate I-1
Division of Reactor Projects I/II
US Nuclear Regulatory Commission
Mail Stop 14B-2
Washington, DC 20555

Senior Resident Inspector
US Nuclear Regulatory Commission
PO Box 38
Buchanan, NY 10511

ATTACHMENT

RESPONSE TO GENERIC LETTER 90-06

RESOLUTION OF GENERIC ISSUE 70, "POWER-OPERATED RELIEF VALVE AND BLOCK VALVE RELIABILITY", AND GENERIC ISSUE 94, "ADDITIONAL LOW-TEMPERATURE OVERPRESSURE PROTECTION FOR LIGHT-WATER REACTORS"

CONSOLIDATED EDISON COMPANY OF NEW YORK, INC.
INDIAN POINT UNIT NO. 2
DOCKET NO. 50-247
DECEMBER, 1990

RESPONSE TO GENERIC LETTER 90-06

As stated in the generic letter, the response shall include the following specific items:

Item 1

A statement by licensees as to whether they will commit to incorporate improvements 1, 2, and 3 in Section 3.1 of Enclosure A. With respect to improvement 3 in Section 3.1 of Enclosure A, licensees shall state whether they will commit to use those modified limiting conditions of operation of PORVs and block valves in the technical specifications for Modes 1, 2, and 3 in Attachment A-1 of Enclosure A for Westinghouse designed plants with two PORVs. In addition to this 10 CFR 50.54(f) request, if the licensees commit to implement these recommended technical specifications, it is requested that they submit modifications to their current technical specifications in a licensee amendment to be submitted by the end of the first refueling outage that starts 6 months or later from the date of this letter.

Response to Item 1

Improvement 1 suggested the following actions:

Include PORVs and block valves within the scope of an operational quality assurance program that is in compliance with 10 CFR Part 50, Appendix B. This program should include the following elements:

a. The addition of PORVs and block valves to the plant operational Quality Assurance List.

b. Implementation of a maintenance/refurbishment program for PORVs and block valves that is based on the manufacturer's recommendations or guidelines and is implemented by trained plant maintenance personnel.

c. When replacement parts and spares, as well as complete components, are required for existing non-safety-grade PORVs and block valves (and associated control systems), it is the intent of this generic letter that these items may be procured in accordance with the original construction codes and standards.

The actions suggested in improvement 1 are currently in effect at Indian Point Unit No. 2. The PORVs and block valves as well as all regulating systems, controlling systems and instrumentation used with these valves are listed in Exhibit A of corporate instruction CI-240-1, 'Quality Assurance Program for Operating Nuclear Plants'. Exhibit A includes those systems, structures and components that affect safety as determined in accordance with 10 CFR 50, Appendix B. Further, CI-240-1 describes a quality assurance program which is in accordance with 10 CFR 50, Appendix B.

The PORVs and block valves are included in the station Preventive Maintenance (PM) program which is based on manufacturer's recommendations. Elements of the PM program include disassembly, inspection, refurbishment and testing as necessary, by qualified personnel. These PM programs are subject to change based on experience, vendor recommendations and guidelines.

The PORVs, block valves and associated control systems were manufactured and procured to the original construction codes for the plant. Replacement parts and spares, as well as complete components, will be procured in accordance with the original construction codes, or to a later suitable code, or in accordance with a commercial grade dedication program. In all cases, the replacement items will be determined to be suitable for their application.

Improvement 2 suggested the following actions:

> Include PORVs, valves in PORV control air systems, and block valves within the scope of a program covered by Subsection IWV, "Inservice Testing of Valves in Nuclear Power Plants," of Section XI of the ASME Boiler and Pressure Vessel code. Stroke testing of PORVs should only be performed during Mode 3 (Hot Standby) or Mode 4 (Hot Shutdown) and in all cases prior to establishing conditions where the PORVs are used for low-temperature overpressure protection. Stroke testing of the PORVs should not be performed during power operation. Additionally, the PORV block valves should be included in the licensee's expanded MOV test program discussed in NRC Generic Letter 89-10, "Safety-Related Motor Operated Valve Testing and Surveillance", dated June 28, 1989.

The PORVs and block valves at Indian Point Unit No. 2 are currently and will continue to be included within the scope of a program covered by Subsection IWV of Section XI. The PORVs are stroke tested at cold shutdown under this program. A study was recently conducted in accordance with Generic Letter 89-04, "Guidance on Developing Acceptable Inservice Testing Programs", to determine if additional valves should be included in the Section XI test program. As a result, several valves in the PORV nitrogen control system will be added to the program by January, 1991. Two automatically actuated valves in the control system, the solenoids that admit control nitrogen to each PORV, that are subject to a program covered by subsection IWV are considered components of each PORV and are presently cycled when the PORVs are stroke tested. Additionally, every refueling outage the nitrogen control system is subject to a surveillance test to verify operability. Further, the PORVs and block valves are functionally tested as part of the overpressure protection system logic tests while in hot shutdown. The block valves are currently included in a MOV test program which is being evaluated in accordance with Generic Letter 89-10, "Safety Related Motor-Operated Valve Testing and Surveillance".

Improvement 3 suggested the following actions:

> Modify the limiting conditions of operation of PORVs and block valves in the technical specifications for Modes 1, 2, and 3 to incorporate the position adopted by the staff in recent licensing actions. These recent technical specifications require that plants that run with the block valves closed (e.g., due to leaking PORVs) maintain electrical power to the block valves so they can be readily opened from the control room upon demand. Additionally, plant operation in Modes 1, 2, and 3 with PORVs and block valves inoperable for reasons other than seat leakage is not permitted for periods of more than 72 hours. Attachments A-1 and A-3 [applicable to Indian Point Unit No. 2] are provided for guidance.

The technical specifications for Indian Point Unit No. 2 currently require that a block valve associated with an inoperable PORV be maintained in the closed position but not be de-energized. Only if a block valve becomes inoperable would it be closed and de-energized.

The ability to relieve primary system pressure using the PORVs is not credited in any design basis accident analyses. Additionally, the PORVs are not solely relied on to mitigate a steam generator tube rupture accident, but their use is one alternative among several others to accomplish that purpose. Further, as indicated in the response to Item 1, the PORVs, block valves and all regulating systems, controlling systems and instrumentation used with these valves are classified as safety-related and maintained and tested accordingly. The Indian Point Unit No. 2 PORVs and block valves have been highly reliable (excluding PORV seat leakage) and available. Therefore, based on the above, Con Edison does not believe it is necessary to institute a 72 hour allowed outage time (AOT) in a limiting condition of operation for the PORVs and block valves.

Item 2

A statement by licensees as to whether they will submit a license amendment request to modify the technical specifications and commit to use the modified technical specifications for the low-temperature overpressure protection system concerning the limiting conditions of operation in Modes 5 and 6 as identified in Attachment B-1 of Enclosure B. In addition to this 10 CFR 50.54(f) request, if the licensees commit to implement these recommended technical specifications, it is requested that they submit modifications to their current technical specifications by the end of the first refueling outage that starts 6 months or later from the date of this letter.

Response to Item 2

The modification recommended in Attachment B-1 concerning the limiting conditions of operation in Modes 5 and 6 involves reducing the AOT of one inoperable PORV from the current 7 days to a proposed 24 hours. Con Edison does not believe this AOT reduction is necessary for Indian Point Unit No. 2 as the overpressure protection system (OPS) is a safety-grade system. Actuation of the OPS is controlled by a channelized logic circuitry which meets seismic design criteria and the single failure requirements of IEEE 279, as there are redundant channels that are physically separated and supplied by separate independent safeguards power supplies. Also, as discussed in the response to Item 1, the PORVs and block valves are safety-related. Therefore, all components of the OPS are subject to maintenance and surveillance testing activities that satisfy our Quality Assurance Program requirements for safety-related equipment.

Additionally, we are sensitive to the need to avoid low temperature overpressure events and would minimize unavailability of the OPS or any component of the system. It should be noted that the PORVs and block valves have proven to be highly reliable (excluding PORV seat leakage) and the unit has not experienced any low temperature overpressure events since installation of the OPS in 1978.

RA-94-106

UNITED STATES
NUCLEAR REGULATORY COMMISSION
WASHINGTON, D.C. 20555-0001

June 2, 1994

Docket No. 50-247

Mr. Stephen Bram
Vice President-Nuclear Power
Consolidated Edison Company
of New York
Broadway and Bleakley Avenues
Buchanan, New York 10511

Dear Mr. Bram:

SUBJECT: REVIEW OF RESPONSE TO GENERIC LETTER 90-06, "RESOLUTION OF GENERIC ISSUE 70, 'POWER-OPERATED RELIEF VALVE AND BLOCK VALVE RELIABILITY,' AND GENERIC ISSUE 94, 'ADDITIONAL LOW-TEMPERATURE OVERPRESSURE PROTECTION FOR LIGHT-WATER REACTORS,' PURSUANT TO 10 CFR 50.54(f)" - INDIAN POINT NUCLEAR GENERATING UNIT NO. 2 (TAC NOS. M77355/M77425)

The purpose of Generic Letter (GL) 90-06 was to have licensees enhance the overall reliability of the power-operated relief valves (PORVs) and block valves so that they could better perform the following safety-related functions:

1. Mitigation of a design-basis steam generator tube rupture (SGTR) accident,

2. Low-temperature overpressure protection of the reactor vessel during startup or shutdown, or

3. Plant cooldown.

The GL addressed the resolution of two generic issues. Generic Issue 70 included upgrades in quality requirements, upgrades in inservice testing requirements, and modified technical specifications (TS) for all pressurized water reactor facilities that incorporate PORVs and block valves in their design. Generic Issue 94 included modified TS for all Westinghouse and Combustion Engineering facilities to reduce the allowed outage time (AOT) for an inoperable overpressure protection system (OPS) channel and thus, reduce the probability of overpressurization events during shutdown conditions.

By letter dated December 21, 1990, you initially responded to GL 90-06. The NRC staff reviewed your initial response and in our letter dated July 28, 1992, concluded that you had not satisfactorily responded to the GL-90-06. Specifically, you did not perform the PORV stroke test under the recommended testing conditions and you had not adopted the TS changes as recommended in the GL.

9406080085

You responded to our concerns by letter dated September 29, 1992. The following is a summary of the NRC staff's review of your September 29, 1992, response.

- At Indian Point 2, stroke testing of the PORVs and block valves to verify full stroke and stroke time is done at Cold Shutdown. However, during an evolution to bring the plant to Cold Shutdown, the PORVs and block valves are stroked during the performance of the surveillance test to verify the operability of the Overpressure Protection System logic. This test is performed at Hot Shutdown prior to establishing conditions where the PORVs are used for low-temperature overpressure protection. Since the valves are verified to open and close under conditions of operation similar to those recommended in the GL, the staff finds the stroke testing methods for the PORVs and the block valves to be acceptable. Further, the PORVs are actuated with a nitrogen supply system, not by a plant control air system. The necessary nitrogen supply system valves, which also need to be tested, are included in the licensee's inservice testing program or are tested when the PORVs are actuated. This meets the intent of the GL recommendations regarding testing of control air system valves, and is acceptable.

- The Indian Point 2 accident analysis for the SGTR accident does not take credit for use of the PORVs to mitigate the accident. Although the emergency operating procedure for the SGTR accident utilizes the PORVs if available, it does not rely on the PORVs. The primary action for depressurizing the reactor coolant system (RCS) during a SGTR accident is pressurizer spray. If the accident occurs concurrent with a loss of offsite power, the auxiliary spray is used. Auxiliary spray is supplied by the charging pumps which are powered by the emergency diesel generators. Since the SGTR accident analysis does not take credit for the PORVs, the staff concludes that your current TS AOTs for both the PORVs and the block valves are acceptable and you have adequately addressed this concern.

- The Indian Point 2 TS include restrictions on equipment operation to protect the reactor coolant system (RCS) against overpressure transients when RCS temperature is less than or equal to 305 °F. In addition the TS require that, when both PORVs or their associated block valves are inoperable, the reactor immediately be placed in a condition where OPS operability is not required. The staff, therefore, concludes that the current TS AOTs for the OPS are acceptable and that you have adequately addressed this concern.

Therefore, the NRC staff concludes that you have adequately addressed all the issues discussed in GL 90-06 for Indian Point 2. This completes our activities associated with TAC Nos. M77355 and M77425. Further NRC review, if any, will be performed by inspection or audit.

Sincerely,

Francis J. Williams Jr., Project Manager
Project Directorate I-1
Division of Reactor Projects - I/II
Office of Nuclear Reactor Regulation

cc: See next page

TABLE 1

Pressure Locking Evaluation for MOVs Using Thrust Force Calculations from Equation 1

					System Conditions Imposed											Actuator Capability								Results		
					Pm + Ph = Pmax																					
NO.	Viv Tag	Gate type	Function	Manufacturer	Pm	Ph	Pmax	Tr	Ta	Limit	WLo	WLv	Tmt	Tmlr	Tmr	%UV	Cf	Pd	Pu	Sa	Vf	Sta	PL	Ta/Tr	Vfmax	Viv Tag
1A	746	dbl disc-//	RHR Hx 22 outlet stop	Anchor Darling	2235	0	2235	25146	45228	motor	98000	126814	45228	46859	34329	72	0.15	1600	22.5	38.48	0.3	3.55	209	1.8	0.48	746
1B	746	dbl disc-//	RHR Hx 22 outlet stop	Anchor Darling	2235	0	2235	34381	87246	motor	98000	126814	87246	90392	66221	100	0.15	800	22.5	38.48	0.3	3.55	209	2.5	0.68	746
2A	747	dbl disc-//	RHR Hx 21 outlet stop	Anchor Darling	2235	0	2235	25759	48447	motor	98000	126814	48447	50206	34329	72	0.15	1600	22.5	38.48	0.3	3.55	822	1.9	0.51	747
2B	747	dbl disc-//	RHR Hx 21 outlet stop	Anchor Darling	2235	0	2235	34994	93454	motor	98000	126814	93454	96848	66221	100	0.15	800	22.5	38.48	0.3	3.55	822	2.7	0.72	747
3A	1802A	dbl disc-//	Recir pump discharge vlv	Anchor Darling	150	254	404	13070	47808	motor	48000	51098	47808	54513	43727	100	0.15	17.8	225	78.54	0.3	1.77	468	3.7	1.08	1802A
3B	1802A	dbl disc-//	Recir pump discharge vlv	Anchor Darling	600	254	854	33479	47808	motor	48000	51098	47808	54513	43727	100	0.15	17.8	225	78.54	0.3	1.77	468	1.4	0.42	1802A
4A	1802B	dbl disc-//	Recir pump discharge vlv	Anchor Darling	150	254	404	13282	48000	oper	48000	51098	51015	58303	43727	100	0.15	17.8	225	78.54	0.3	1.77	680	3.6	1.08	1802B
4B	1802B	dbl disc-//	Recir pump discharge vlv	Anchor Darling	600	254	854	33691	48000	oper	48000	51098	51015	58303	43727	100	0.15	17.8	225	78.54	0.3	1.77	680	1.4	0.42	1802B
5A	885A	dbl disc-//	RHR pump suction from cont. sump	Anchor Darling	150	0	150	9518	60714	oper	60714	69395	n/r	66983	58964	100	0.15	22.39	1	113.1	0.3	2.07	443	6.4	1.94	885A
5B	885A	dbl disc-//	RHR pump suction from cont. sump	Anchor Darling	450	0	450	29255	60714	oper	60714	69395	n/r	66983	58964	100	0.15	22.39	1	113.1	0.3	2.07	443	2.1	0.62	885A
6A	885B	dbl disc-//	RHR pump suction from cont. sump	Anchor Darling	150	0	150	9426	60714	oper	60714	69395	n/r	69342	58964	100	0.15	22.39	1	113.1	0.3	2.07	351	6.4	1.94	885B
6B	885B	dbl disc-//	RHR pump suction from cont. sump	Anchor Darling	450	0	450	29163	60714	oper	60714	69395	n/r	69342	58964	100	0.15	22.39	1	113.1	0.3	2.07	351	2.1	0.62	885B

NOTES

CASES 1A, 2A ARE FOR LARGE BREAK LOCAs WITH OFFSITE POWER AND DEGADED VOLTAGE.
CASES 1B, 2B ARE FOR LARGE BREAK LOCAs WITHOUT OFFSITE POWER AND FULL EDG VOLTAGE.

CASES 3A - 6A ARE FOR A LOCA DURING POWER OPERATION WITH THE SOURCE FOR PRESSURE LOCKING CAUSED BY QUARTERLY RHR PUMP TEST
CASES 3B -6B ARE FOR A LOCA DURING POWER OPERATION WITH THE SOURCE FOR PRESSURE LOCKING CAUSED BY RHR OPERATING IN THE SHUTDOWN DECAY HEAT REMOVAL MODE

KEY

Pm = Pressure in valve bonnet from mass addition (Pressure Induced Pressure Locking)
Ph = Pressure in valve bonnet from heat addition (Thermal Induced Pressure Locking)
Pmax = Maximum pressure in bonnet from Pressure and Thermal Induced Pressure Locking
Pu = Pressure upstream of valve
Pd = Pressure downstream of valve
Sa = Valve seat area
n/r = not required, valve located in PAB or opens on initial SI
n/a = not available
Vfmax = that value of valve factor for which actuator output is just equal to the pressure locking load
Vf = Open valve factors from dynamic tests

Sta = Valve stem area
PL = Packing load from field data
Tr = Required thrust needed to open the valve based on Pmax (Pressure Locking)
Ta = Available thrust from the MOV
WLv = Valve mechanical weak link for the opening condition
WLo = Operator mechanical weak link for the opening condition (based on using Kalsi report, thrust rating 140%, for Tag # 1802 A&B thrust rating 200%)
Tmr = Rated motor capacity at UV with a .15 stem coefficient (all nos. based on the pullout efficiency)
Tmt = Maximum motor capacity with thermal reductions due to max containment temperature and a .15 stem coefficient (all nos. based on the pullout efficiency)
Tmlr = Maximum motor capacity at UV with a .15 stem coefficient based on actual motor torque test data (all nos. based on the pullout efficiency)
%UV = motor terminal voltage (%)
Cf = stem coefficient of friction

TABLE 1

Pressure Locking Evaluation for MOVs Using Thrust Force Calculations from Equation 1

					System Conditions Imposed										Actuator Capabilty									Results		
					Pm + Ph = Pmax																					
N0.	Vlv Tag	Gate type	Function	Manufacturer	Pm	Ph	Pmax	Tr	Ta	Limit	W/Lo	WLv	Tmt	Tmlr	Tmr	%UV	Cf	Pd	Pu	Sa	Vf	Sta	PL	Ta/Tr	Vfmax	Vlv Tag
1A	746	dbl disc-//	RHR Hx 22 outlet stop	Anchor Darling	2235	0	2235	25146	45228	motor	98000	126814	45228	46859	34329	72	0.15	1600	22.5	38.48	**0.3**	3.55	209	**1.8**	0.48	746
1B	746	dbl disc-//	RHR Hx 22 outlet stop	Anchor Darling	2235	0	2235	34381	87246	motor	98000	126814	87246	90392	66221	100	0.15	800	22.5	38.48	**0.3**	3.55	209	**2.5**	0.68	746
2A	747	dbl disc-//	RHR Hx 21 outlet stop	Anchor Darling	2235	0	2235	25759	48447	motor	98000	126814	48447	50206	34329	72	0.15	1600	22.5	38.48	**0.3**	3.55	822	**1.9**	0.51	747
2B	747	dbl disc-//	RHR Hx 21 outlet stop	Anchor Darling	2235	0	2235	34994	93454	motor	98000	126814	93454	96848	66221	100	0.15	800	22.5	38.48	**0.3**	3.55	822	**2.7**	0.72	747
3A	1802A	dbl disc-//	Recir pump discharge vlv	Anchor Darling	150	254	404	13070	47808	motor	48000	51098	47808	54513	43727	100	0.15	17.8	225	78.54	**0.3**	1.77	468	**3.7**	1.08	1802A
3B	1802A	dbl disc-//	Recir pump discharge vlv	Anchor Darling	600	254	854	33479	47808	motor	48000	51098	47808	54513	43727	100	0.15	17.8	225	78.54	**0.3**	1.77	468	**1.4**	0.42	1802A
4A	1802B	dbl disc-//	Recir pump discharge vlv	Anchor Darling	150	254	404	13282	48000	oper	48000	51098	51015	58303	43727	100	0.15	17.8	225	78.54	**0.3**	1.77	680	**3.6**	1.08	1802B
4B	1802B	dbl disc-//	Recir pump discharge vlv	Anchor Darling	600	254	854	33691	48000	oper	48000	51098	51015	58303	43727	100	0.15	17.8	225	78.54	**0.3**	1.77	680	**1.4**	0.42	1802B
5A	885A	dbl disc-//	RHR pump suction from cont. sump	Anchor Darling	150	0	150	9518	60714	oper	60714	69395	n/r	66983	58964	100	0.15	22.39	1	113.1	**0.3**	2.07	443	**6.4**	1.94	885A
5B	885A	dbl disc-//	RHR pump suction from cont. sump	Anchor Darling	450	0	450	29255	60714	oper	60714	69395	n/r	66983	58964	100	0.15	22.39	1	113.1	**0.3**	2.07	443	**2.1**	0.62	885A
6A	885B	dbl disc-//	RHR pump suction from cont. sump	Anchor Darling	150	0	150	9426	60714	oper	60714	69395	n/r	69342	58964	100	0.15	22.39	1	113.1	**0.3**	2.07	351	**6.4**	1.94	885B
6B	885B	dbl disc-//	RHR pump suction from cont. sump	Anchor Darling	450	0	450	29163	60714	oper	60714	69395	n/r	69342	58964	100	0.15	22.39	1	113.1	**0.3**	2.07	351	**2.1**	0.62	885B

NOTES

CASES 1A, 2A ARE FOR LARGE BREAK LOCAs WITH OFFSITE POWER AND DEGADED VOLTAGE.
CASES 1B, 2B ARE FOR LARGE BREAK LOCAs WITHOUT OFFSITE POWER AND FULL EDG VOLTAGE.

CASES 3A - 6A ARE FOR A LOCA DURING POWER OPERATION WITH THE SOURCE FOR PRESSURE LOCKING CAUSED BY QUARTERLY RHR PUMP TEST
CASES 3B -6B ARE FOR A LOCA DURING POWER OPERATION WITH THE SOURCE FOR PRESSURE LOCKING CAUSED BY RHR OPERATING IN THE SHUTDOWN DECAY HEAT REMOVAL MODE

KEY

Pm = Pressure in valve bonnet from mass addition (Pressure Induced Pressure Locking)
Ph = Pressure in valve bonnet from heat addition (Thermal Induced Pressure Locking)
Pmax = Maximum pressure in bonnet from Pressure and Thermal Induced Pressure Locking
Pu = Pressure upstream of valve
Pd = Pressure downstream of valve
Sa = Valve seat area
n/r = not required, valve located in PAB or opens on initial SI
n/a = not available
Vfmax = that value of valve factor for which actuator output is just equal to the pressure locking load
Vf = Open valve factors from dynamic tests

Sta = Valve stem area
PL = Packing load from field data
Tr = Required thrust needed to open the valve based on Pmax (Pressure Locking)
Ta = Available thrust from the MOV
WLv = Valve mechanical weak link for the opening condition
WLo = Operator mechanical weak link for the opening condition (based on using Kalsi report, thrust rating 140%, for Tag # 1802 A&B thrust rating 200%)
Tmr = Rated motor capacity at UV with a .15 stem coefficient (all nos. based on the pullout efficiency)
Tmt = Maximum motor capacity with thermal reductions due to max containment temperature and a .15 stem coefficient (all nos. based on the pullout efficiency)
Tmlr = Maximum motor capacity at UV with a .15 stem coefficient based on actual motor torque test data (all nos. based on the pullout efficiency)
%UV = motor terminal voltage (%)
Cf = stem coefficient of friction

ANSTEC
APERTURE
CARD

Also Available on
Aperture Card

9608090089-01