123 Main Street
White Plains, New York 10
914 681.6200

New York Power Authority

February 28, 1994
IPN-94-022

U.S. Nuclear Regulatory Commission
ATTN: Document Control Desk
Mail Station P1-137
Washington, DC 20555

Subject: **Indian Point 3 Nuclear Power Plant**
Docket No. 50-286
Request For Additional Information Concerning the Second 10-Year Interval Inservice Inspection Program Plan and Associated Relief Requests

References:

1. NRC letter Nicola F. Conicella to R. E. Beedle, "Request for Additional Information Concerning the Second 10-Year Interval Inservice Inspection Program Plan, Revision 1, and Associated Requests for Relief–Indian Point Nuclear Generating Unit No. 3 (TAC No. M82269)," dated November 22, 1993.

2. NRC letter Nicola F. Conicella to New York Power Authority, "Meeting Minutes for December 7, 1993 Meeting to Discuss Second 10-Year Interval Inservice Inspection Program Plan, Revision 1, and Associated Relief Requests–Indian Point Nuclear Generating Unit No. 3 (TAC No. M82269)," dated January 6, 1994.

Dear Sir:

In Reference 1, the NRC requested the Authority to provide additional information regarding the Second 10-Year Interval Inservice Inspection Program and associated relief requests. On December 7, 1993, a meeting was held between Authority personnel and NRC staff (Reference 2) to discuss the request for additional information (RAI). Enclosure I to this submittal provides the information requested in the RAI as discussed and clarified at the December 7, 1993 meeting. All relief requests revised as a result of these responses are contained in Attachment 7 to Enclosure I.

9403080258 940228
PDR ADOCK 05000286
Q PDR

A047
1/1

If you have any questions, please contact Mr. P. Kokolakis.

Very truly yours,

for Gael J. Bower

W. A. Josiger
Acting Executive Vice-President
Nuclear Generation

att: as stated

cc: U.S. Nuclear Regulatory Commission
475 Allendale Road
King of Prussia, PA 19406

Resident Inspector's Office
Indian Point Unit 3
U.S. Nuclear Regulatory Commission
P.O. Box 337
Buchanan, NY 10511

Mr. Nicola F. Conicella, Project Manager
Project Directorate I-1
Division of Reactor Projects I/II
U.S. Nuclear Regulatory Commission
Mail Stop 14 B2
Washington, DC 20555

ENCLOSURE I TO IPN-94-022

REQUEST FOR ADDITIONAL INFORMATION (RAI) RELATED TO THE SECOND 10-YEAR INTERVAL INSERVICE INSPECTION (ISI) PROGRAM PLAN, REV.1 AND ASSOCIATED REQUESTS FOR RELIEF

New York Power Authority
Indian Point 3 Nuclear Power Plant
Docket No. 50-286

REQUEST FOR ADDITIONAL INFORMATION (RAI) RELATED TO THE SECOND 10-YEAR INTERVAL INSERVICE INSPECTION (ISI) PROGRAM PLAN, REV. 1 AND ASSOCIATED REQUESTS FOR RELIEF

INDIAN POINT NUCLEAR GENERATING UNIT NO. 3

RAI Item A

The licensee states that the revised examination plan for Class 2 piping satisfies the requirements of the 1983 Edition, Summer 1983 Addenda of Section XI. Based on an evaluation of this submittal, it appears that the licensee has scheduled an appropriate number of safety injection system piping welds in the program. The licensee has, however, agreed to perform a volumetric examination of only one weld, the first weld inside containment, in the containment spray system. This sample of containment spray system welds remains unacceptable to the staff.

The staff reiterates that the Code of Federal Regulations, Paragraph 10 CFR 50.55a(b)(2)(iv), requires that appropriate ASME Code Class 2 piping welds in the residual heat removal (RHR), emergency core cooling (ECC), and containment heat removal (CHR) systems be examined. This requirement is in addition to the requirements of the Code. Therefore, piping welds in these systems may not be completely excluded from inservice volumetric examination based on Section XI exemption criteria. These systems may require augmented examinations in addition to the Code required examinations as they are relied on to function during emergency conditions. For this reason, appropriate welds shall be selected from portions of these systems and volumetric examinations performed to verify system integrity. The staff has previously determined that a 7.5% augmented volumetric sample constitutes an acceptable resolution at similar plants. The licensee should review the examination areas scheduled for the subject systems and select welds appropriate to the system. In accordance with the regulatory requirements of 10 CFR 50.55a(b)(2)(iv), the licensee is advised to ensure that the ISI Program Plan does include volumetric examination of a representative sample of piping welds for these systems, and provide a listing to confirm that these welds will receive augmented examination.

Response to RAI Item A (Containment Spray Class 2 weld examination issue):

The New York Power Authority agrees to perform augmented volumetric inspections on a 7.5% sample of welds in the containment spray system piping from the containment spray pumps to the 869A and 869B valves. There are a total of 68 welds in this portion of piping and the 7.5% sample will include 6 welds. Weld inspections on both piping trains will be performed during the next (cycle 9/10) refueling outage. As requested at the December 7, 1993 meeting, the elevation of the Refueling Water Storage Tank was verified to be above the elevation of the 869A and 869B valves.

RAI Item B

Relief Requests No. 6 and 10: Relief is requested from surface examination of the reactor vessel nozzle-to-safe end and safe end-to-pipe welds.

These relief requests were previously evaluated and granted with the conditions stated in the NRC safety evaluation (SE) dated November 7, 1991. Based on this evaluation, it was determined that Relief Request 6 and Relief Request 10 would be acceptable provided that the licensee meets the following conditions:

(1) The remote volumetric examination from the inside surface includes the entire weld volume and heat-affected zone instead of only the inner one-third of the weld.

(2) The ultrasonic testing instrumentation and procedure are demonstrated to be capable of detecting outside diameter surface-connected defects, in the circumferential orientation, in a laboratory test block. The defects should be cracks and not machined notches.

The licensee states that a "best effort" inspection of the entire weld and adjacent areas will be performed. However, there is no discussion of the conditions for acceptance of the relief request. This inspection will be performed using the Westinghouse remote reactor vessel examination tool and calibration block INT-46, which is owned by the licensee. Please discuss the procedure used to demonstrate the ultrasonic technique's capability for detecting inside and outside surface-connected flaws. Include in the discussion the type of reflectors used for the calibration of the ultrasonic equipment and the type of reflectors used to qualify the technique and quantify the coverage that is achievable with the technique being implemented.

Response to RAI Item B (Relief Requests 6 & 10):

RAI Item B referenced Relief Requests 6 & 10, therefore, information for both Relief Requests is being supplied.

Relief Request 6 (Examination Category B-F Item B5.10): Relief Request 6 has been revised to request that an ultrasonic inspection be performed on both the inner 1/3 of the weld volume and on the outside surface of the weld in lieu of the code required ultrasonic inspection of the inner 1/3 of the weld volume and surface examination of the outside surface of the weld. The Westinghouse remote reactor vessel tool used to perform these inspections demonstrated the capability of detecting OD flaws as small as 8% (notch 5) in the calibration block at the last inspection. A great deal of effort and funding was expended to ensure this calibration block was as accurate a representation of the actual component as possible and to install flaws in the calibration block at all possible locations, including OD notches in the area of interest (described in Attachment 1). A review of all similar welds at IP3 (Examination Category B-F Items B5.10, B5.40, B5.70) was performed and there were no code unacceptable conditions noted out of 34 examinations performed. Service induced cracks almost always begin at the inside surface of the weld, not the outside. Therefore, the surface examination is a conservative measure and the volumetric examination of the inner 1/3 of the weld volume is where flaws are more likely to be found. Public health and safety will not be adversely impacted by allowing the proposed examination to be performed in lieu of the code requirements.

Relief Request 10 (Examination Category B-J Item B9.11): Relief Request 10 has been revised to request that an ultrasonic inspection be performed on both the inner 1/3 of the weld volume and on the outside surface of the weld in lieu of the code required ultrasonic inspection of the inner 1/3 of the weld volume and surface examination of the outside surface of the weld. The Westinghouse remote reactor vessel tool used to perform these inspections demonstrated the capability of detecting OD flaws as small as 8% (notch 5) in the calibration block at the last inspection. A great deal of effort and funding was expended to ensure this calibration block was as accurate a representation of the actual component as possible and to install flaws in all possible locations, including OD notches in the area of interest (described in Attachment 1). A review of all previous inspection data on Code Category B-J Item B9.11 welds was performed and there was only one code unacceptable indication out of 68 examinations performed. This surface indication was of a very minor nature and was removed with light grinding. Service induced cracks almost always begin at the inside surface of the weld, not the outside, therefore, the surface examination is a conservative measure and the volumetric examination of the inner 1/3 of the weld volume is where flaws are more likely to be found. Public health and safety will not be adversely impacted by allowing the proposed examination to be performed in lieu of the code requirements.

RAI Item C

Relief Request No. 9: Relief is requested from volumetric examination of the pressurizer nozzle inner radius sections.

This relief request was previously evaluated and granted with the condition stated in the NRC SE dated November 7, 1991. Based on this evaluation, Relief Request 9 was granted provided that the licensee meets the following condition: In addition to the visual VT-2 examination required for hydrostatic and leakage tests, the licensee should perform a remote visual examination of the pressurizer nozzle inside radius sections.

The licensee states that during the October 5, 1992, teleconference, the NRC was informed that the licensee would be unable to perform the remote visual examination of the lower nozzle inner radius section because of an obstruction. Drawings were submitted that show a retaining basket covering the outlet of the pressurizer surge nozzle.

Based on the evaluation of the relief request and supporting drawings, it appears that access to perform a remote visual examination of the pressurizer lower nozzle inside radius section is restricted. Therefore, the Code-required volumetric examination and the imposed alternative visual examination are impractical for the lower head nozzle inner radius.

It is noted that the impracticality of the remote visual examination only applies to the pressurizer surge nozzle. The licensee has not provided a revised relief request that incorporates a remote visual examination for nozzles other than the surge nozzle where applicable, as required as a condition by the November 7, 1991, SE. Please confirm that a remote visual examination will be performed on the other applicable nozzles and revise the relief request to reflect this condition.

Response to RAI Item C (Relief Request 9):

Relief Request 9 has been revised to request relief from the visual examination of the Pressurizer surge nozzle only. As a condition stated in the safety evaluation of the Second 10-Year Interval ISI Program Plan, a visual examination will be performed on all other Pressurizer nozzles. Separate relief will be requested for any examinations which cannot be performed due to high radiation, difficult access, or the geometry of the other nozzles.

RAI Item D

Relief Request No. 13: Relief is requested from the examination frequency for reactor coolant pump flywheels as specified by Regulatory Guide (RG) 1.14. This relief request was previously evaluated and denied in the NRC SE dated November 7, 1991. Based on the evaluation of the position submitted by the licensee by letter dated January 29, 1993, the staff finds the licensee's position unacceptable. The licensee has not provided an acceptable basis to allow relaxation of the frequency for volumetric examination of the flywheels, nor sufficient supporting documentation to demonstrate that the RG 1.14 positions are impractical. It should be noted that the positions of RG 1.14 are in addition to ASME Code, Section XI requirements. As such, the schedule frequency of the Code is not applicable. The staff has determined that reactor coolant pump flywheel integrity is critical to the safe operation of nuclear power plants. Therefore, please provide a schedule of the reactor coolant pump flywheel examinations in accordance with RG 1.14 for review.

Response to RAI Item D (Relief Request 13):

Relief Request 13 is being withdrawn. This relief request constituted a relaxation of the Reactor Coolant Pump (RCP) flywheel examination frequency from that required by Regulatory Guide 1.14. Since the New York Power Authority is not committed to Regulatory Guide 1.14, it was agreed to at the December 7, 1993 meeting with the NRC that relief was not required.

The New York Power Authority's alternate inspection program is a very effective and aggressive preventive maintenance program for RCP motors. The Authority owns a spare RCP motor and once every refueling cycle one RCP motor is removed from service, replaced with the spare, and the removed motor is sent out for refurbishment. After the motor is refurbished, it is used as the spare and the process is repeated thereby ensuring all RCP motors are refurbished once every ten years.

An ultrasonic examination of the areas of higher stress concentration at the bore and keyway will be performed every time an RCP motor is disassembled for refurbishment. A surface examination will be performed at the same time, therefore, each RCP flywheel will be surface and volumetrically inspected once every ten years. During the first ten year interval all flywheels were inspected and no indications were noted.

In addition, the Indian Point 3 FSAR states in section 4.3.1, "Reactor Coolant Pump Flywheel, Methods of Quality Assurance," that volumetric and surface examination of one pump each refueling is more than adequate.

RAI Item E

Relief Request No. 22: Relief is requested from full volumetric coverage for the Pressurizer head circumferential weld. Provided are the percentages of coverage obtained for the volumetric examination of circumferential Weld 1. It is noted that the coverage is minimal (11 percent with 45 degree UT and 10 percent with 60 degree UT). No percentage of coverage is provided for Weld 2. In review of the sketches provided with the relief request, it appears that the UT scanning is limited for only a small percentage of the weld length. Please describe the limitations that result in the small percentage of coverage as reported. In addition, are Welds 1 and 2 associated with the pressurizer upper head circumferential weld or the lower head circumferential weld?

Response to RAI Item E (Relief Request 22):

The methodology, drawings, and calculations used to determine the percentage of weld required volume inspected for Pressurizer weld 1 are attached for your information (Attachment 2). Included are Weld Volumetric Coverage Assessment sheets and associated drawings for the 45 degree and 60 degree ultrasonic examinations performed on Pressurizer weld 1 in both 1989 and 1990. The primary limitation on this weld for both the 45 degree and 60 degree examinations is the permanent insulation attached to the Pressurizer. The curvature of the Pressurizer lower head also limits the 60 degree examination but not to the extent of the insulation. The instrument taps and welded pads are very minor limitations to the examinations.

No relief is requested for Pressurizer weld 2, therefore, no percentage of weld volume coverage is given for weld 2.

Welds 1 & 2 are associated with the Pressurizer lower head circumferential welds (Attachment 3).

RAI Item F

Relief Request No. 26: Relief is requested from full volumetric examination of Examination Category C-A, Items C1.10 and C1.20. The volumetric examination coverage achieved for Examination Category C-A, Items C1.10 and C1.20 are provided for the RHR heat exchanger, excess letdown heat exchanger, non regenerative letdown heat exchanger, volume control tank, boron injection tank, seal water injection filter, reactor coolant filter, and accumulator tank. In several cases the percentage of volumetric examination coverage is minimal. This minimal coverage provides little information relative to the component's structural integrity. For examination areas of less than 50 percent volumetric coverage, relief may be authorized provided the licensee schedules an alternative examination. Please describe proposed alternative examinations and basis for concluding that they assure component structural integrity.

Response to RAI Item F (Relief Request 26):

RAI Item F references Relief Request 26 but requests information involving both Relief Requests 15 and 26, therefore, information for both Relief Requests is being supplied.

Relief Request 15 (Examination Category C-A Item C1.10): Relief Request 15 has been revised to state that in addition to performing volumetric examination to the maximum extent possible, a surface examination will be performed for examination areas where less than 50 percent volumetric coverage is achieved. During the first two 3 1/3 year periods of the second ten year interval, 30 components in Examination Category C-A Item C1.10 were inspected with no indications greater than code allowable noted. Public health and safety will not be adversely impacted by allowing the proposed examination to be performed in lieu of the code requirements.

The welds listed below will have surface examinations performed during the cycle 9/10 refueling outage.

ISI SKETCH	WELD NUMBER
2-1120	31-2
2-1140	2
2-1150	2

The methodology, drawings, and calculations used to determine the percentage of weld required volume inspected for the welds in Relief Request 15 are attached for information (Attachment 4). Included are Weld Volumetric Coverage Assessment sheets and associated drawings for the 45 degree and 60 degree ultrasonic examinations (as applicable) performed on all the welds in both 1989 and 1990.

Relief Request 26 (Examination Category C-A Item C1.20): Relief Request 26 has been revised to state that in addition to performing the volumetric examination to the maximum extent possible, a surface examination will be performed for examination areas where less than 50 percent volumetric coverage is achieved. During the first two 3 1/3 year periods of the second ten year interval, 32 components in Examination Category C-A Item C1.20 were inspected with no indications greater than code allowable noted. Public health and safety will not be adversely impacted by allowing the proposed examination to be performed in lieu of the code requirements.

The welds listed below will have surface examinations performed during the cycle 9/10 refueling outage.

ISI SKETCH	WELD NUMBER
2-1120	31 -1
2-1150	1
2-1210	32-1
2-1220	1 & 2

The methodology, drawings, and calculations used to determine the percentage of weld required volume inspected for the welds in Relief Request 26 are attached for information (Attachment 5). Included are Weld Volumetric Coverage Assessment sheets and associated drawings for the 45 degree and 60 degree ultrasonic examinations (as applicable) performed on all the welds in both 1989 and 1990.

RAI Item G

Relief Request No. 28: The licensee has documented limitations associated with surface magnetic particle testing (MT) examination of Class 2 integral attachments. In most cases the licensee notes that the coverage is one directional. This indicates that although obstructions and clearances may restrict the MT examinations, access may be sufficient for liquid penetrant testing (PT) techniques. It is not uncommon for utilities to use penetrant examination techniques for carbon steel component and pipe welds where obstructions prevent full coverage using MT equipment. The licensee should consider the use of liquid PT examinations in part or full, to satisfy the surface examination requirements where full coverage is not achieved by magnetic particle testing. Please provide additional information for each examination area describing the extent of coverage that can be achieved by supplemental liquid penetrant examination techniques.

Response to RAI Item G (Relief Request 28):

Relief Request 28 has been revised to state that in addition to performing surface examinations to the maximum extent possible, a VT-3 visual examination will be performed on all supports. The VT-3 visual examination is conducted to determine the general mechanical and structural conditions of components and their supports, such as the presence of loose parts, debris, or abnormal corrosion products, wear, erosion, corrosion, and the loss of integrity at bolted or welded connections. Public health and safety will not be adversely impacted by allowing the proposed examination to be performed in lieu of the code requirements.

A detailed review of hanger drawings was performed for all Code Category C-C Code Item Number C3.20 integral attachments in Relief Request 28. Of the 22 supports reviewed, it was determined that a portion of one support has sufficient access for supplemental surface examination techniques. The accessible portion of the component listed below will be reinspected to ensure a complete examination is performed during the cycle 9/10 refueling outage. Drawings of all integral attachments which do not have sufficient access for supplemental examination techniques have been marked with the clearances that are available (Attachment 6). A VT-3 visual examination was performed on all 22 supports and no reportable indications were noted.

ISI SKETCH	SUPPORT NUMBER
2-2101	MSR-13

COMMITMENTS ASSOCIATED WITH IPN-94-022

Comm. No.	Commitment Description	Due Date
IPN-94-022-01	Perform augmented volumetric inspections on a 7.5% sample of welds in containment spray system piping from the containment spray pumps to 869A & B valves.	During the cycle 9/10 refueling outage
IPN-94-022-02	Ultrasonic inspection be performed on both the inner 1/3 of the weld volume and on the outside surface of the weld for the reactor vessel nozzle to safe-end and safe-end to pipe welds.	Prior to end of 10 year ISI interval
IPN-94-022-03	Visual examination will be performed on all pressurizer nozzles except the surge nozzle.	Prior to end of 10 year ISI interval
IPN-94-022-04	Surface examinations be performed on ISI sketch 2-1120 weld 31-2 2-1140 weld 2 2-1150 weld 2 2-1120 weld 31-1 2-1150 weld 1 2-1210 weld 32-1 2-1220 welds 1 & 2	During the cycle 9/10 refueling outage
IPN-94-022-05	Supplemental surface examinations be performed on ISI sketch 2-2101 support MSR-13.	During the cycle 9/10 refueling outage

COMMITMENTS ASSOCIATED WITH IPN-94-022
(FOR INTERNAL USE ONLY)

Comm. No.	Commitment Description	Due Date	Resp. Depart./ Individual
IPN-94-022	Ensure the completion of all commitments listed below, and furnish proof of implementation to the Director of Nuclear Licensing (WPO).	End of 10 year ISI interval	Nuc. Maint./ J. Kaucher
IPN-94-022-01	Perform augmented volumetric inspections on a 7.5% sample of welds in containment spray system piping from the containment spray pumps to 869A & B valves.	During the cycle 9/10 refueling outage	Nuc. Maint./ J. Kaucher
IPN-94-022-02	Ultrasonic inspection be performed on both the inner 1/3 of the weld volume and on the outside surface of the weld for the reactor vessel nozzle to safe-end and safe-end to pipe welds.	Prior to end of 10 year ISI interval	Nuc. Maint./ J. Kaucher
IPN-94-022-03	Visual examination will be performed on all pressurizer nozzles except the surge nozzle.	Prior to end of 10 year ISI interval	Nuc. Maint./ J. Kaucher
IPN-94-022-04	Surface examinations be performed on ISI sketch 2-1120 weld 31-2 2-1140 weld 2 2-1150 weld 2 2-1120 weld 31-1 2-1150 weld 1 2-1210 weld 32-1 2-1220 welds 1 & 2	During the cycle 9/10 refueling outage	Nuc. Maint./ J. Kaucher
IPN-94-022-05	Supplemental surface examinations be performed on ISI sketch 2-2101 support MSR-13.	During the cycle 9/10 refueling outage	Nuc. Maint./ J. Kaucher

50-286 INDIAN POINT 3 PASNY

ADDITIONAL INFORMATION CONCERNING THE SECOND 10-YR INTERVAL INSERVICE INSPECTION PROGRAM PLAN & ASSOCIATED RELIEF REQUESTS

Rec'd w/ ltr dtd 2/28/94.....9403080258

-NOTICE-

THE ATTACHED FILES ARE OFFICIAL RECORDS OF THE INFORMATION & REPORTS MANAGEMENT BRANCH. THEY HAVE BEEN CHARGED TO YOU FOR A LIMITED TIME PERIOD AND MUST BE RETURNED TO THE RECORDS & ARCHIVES SERVICES SECTION P1-22 WHITE FLINT. PLEASE DO NOT SEND DOCUMENTS CHARGED OUT THROUGH THE MAIL. REMOVAL OF ANY PAGE(S) FROM DOCUMENT FOR REPRODUCTION MUST BE REFERRED TO FILE PERSONNEL.

-NOTICE-

ATTACHMENT 1

NEW YORK POWER AUTHORITY
INDIAN POINT NUCLEAR POWER PLANT
UNIT NO. 3
CALIBRATION BLOCKS

INDIAN POINT UNIT NO. 3 DESIGNATION	:	INT-46
COMPONENT/SYSTEM	:	REACTOR VESSEL NOZZLE TO SAFE-END AND REACTOR COOLANT PIPE TO SPOOL
SIZE/SCHEDULE	:	2.5"T X 18.5"L X 6.0"W
MATERIAL	:	A508 CLASS 2 CARBON STEEL; A351-65-CF8A FORGING; TP 316 STAINLESS STEEL
HEAT OR IDENTITY NUMBER	:	31-3212; 57128; K57396

ASME SECTION V AND XI 1983 EDITION THROUGH SUMMER 1983 ADDENDA REQUIREMENTS:

1. Section V : T-110 and T-548
2. Section XI : Article III-1100, Supplement 7 and IMA-2250
3. Material : A508 Class 2 Carbon Steel; A351-65-CF8A Forging; TP 316 Stainless Steel

WESTINGHOUSE ELECTRIC CORPORATION - NSID - INSPECTION SERVICE DESIGN:

Calibration block was designed to meet intent of the ASME Boiler and Pressure Vessel Code Section V and XI 1983 Edition through Summer 1983 Addenda for Austenitic Piping.

RECOMMENDATION:

None.

NOTES:

1. APPLICABLE TO SECTION XI 1983 EDITION THRU SUMMER 1983 ADDENDA.

HOLES:

2. FLAT BOTTOM HOLES A,B ,C,H AND I 2.875" DEEP X 0.125" DIAMETER ± 0.03".
3. FLAT BOTTOM HOLES D,E ,F AND G 2.875" DEEP X 0.188" DIAMETER ± 0.03".
4. HOLE DIAMETER THRU THICKNESS TO BE ± 0.06".
5. ETCH SURFACE TO DETERMINE EDGE OF WELD PREP FOR LOCATING THE EDGE OF HOLES A,B,C AND D AS DEPICTED.

NOTCHES:

6. N1,N2,N3,N4,N5 AND N6 ARE 2.875" LONG ±10%.
7. N1,N2 AND N6 ARE 0.104T -0.009T SQUARED INTO BASE METAL.
8. N5 IS 0.104T -0.009T SQUARED INTO BASE METAL.
9. N3 IS 3%T E.D.M.
10. N4 IS 10%T E.D.M.
11. NOTCH WIDTH SHALL BE 0.015" ± 0.005"
12. NOTCH DEPTH +10% -20%
13. NOTCH PERPENDICULARITY ±2%

BLOCK TOLERANCES:

14. BLOCK LENTGH,WIDTH AND THICKNESS TOLERANCES ± 1/16".

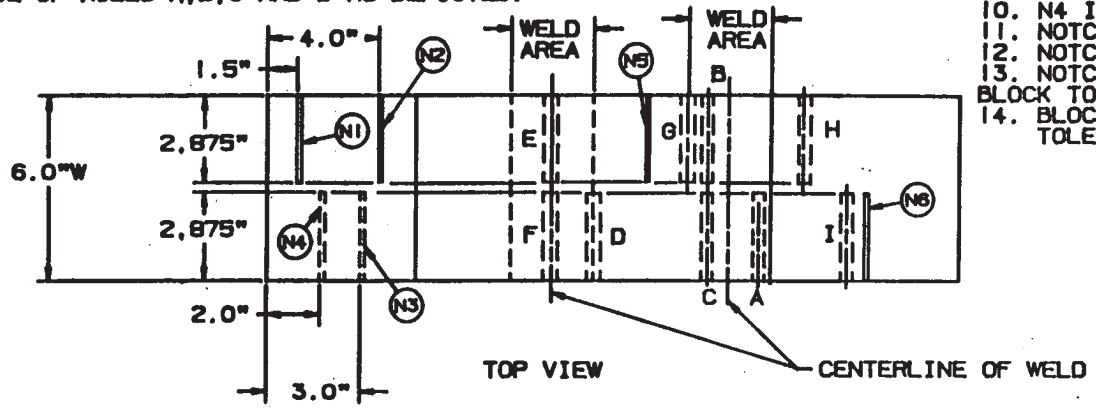

TOP VIEW

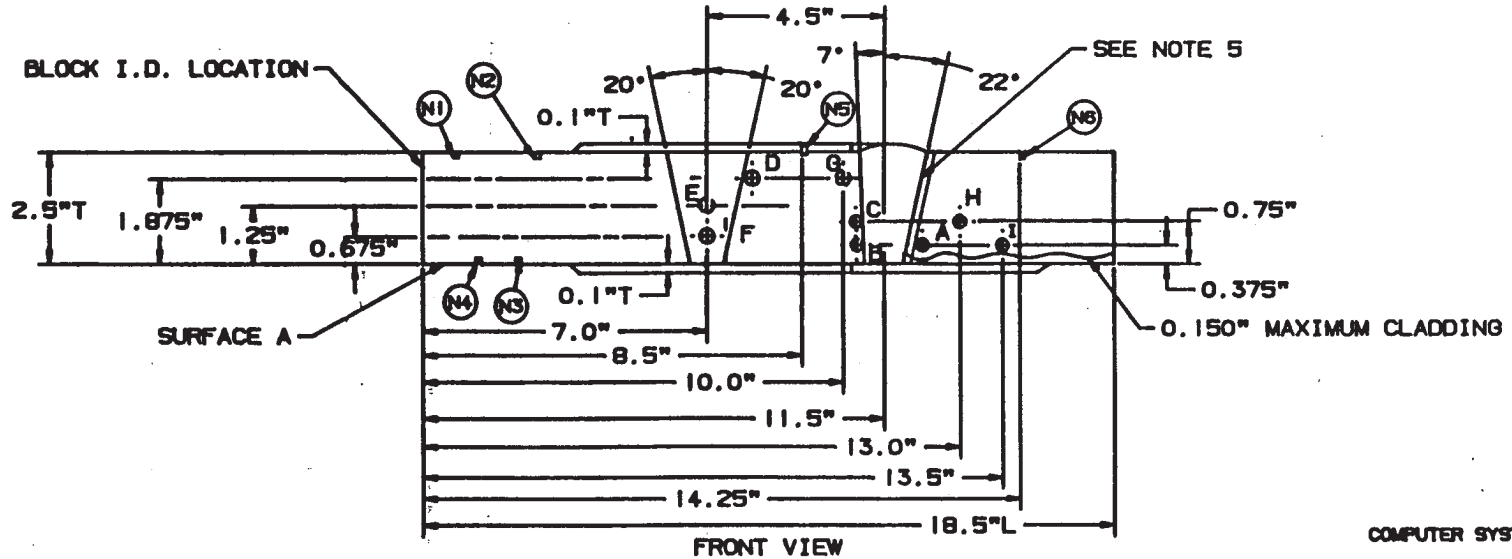

FRONT VIEW

COMPUTER SYSTEM PLANT MODELING

NDTD TECHNICAL APPROVAL Lance E. Mankle	07-21-87	Westinghouse Electric Corporation PLANT ENGINEERING DIVISION - PITTSBURGH, PA
LEVEL III APPROVAL	7-21-87	TITLE CALIBRATION BLOCK INT-46 (SH. 1 OF 2) REACTOR VESSEL SAFE-END AND REACTOR COOLANT PIPE TO SPOOL ASME CLASS 2 CARBON STEEL,A-381-65-CFBA FORGING;TP316 STAINLESS STEEL HEAT NO.: 81-3212;87129;K97366
PRODUCT ASSURANCE APPROVAL	7/27/87	
PRODUCT LINE APPROVAL	7/29/87	C SK. NO. INT-206 REV. 1

REVISION

4 3 2 1

NOTES:
1. APPLICABLE TO SECTION XI 1983 EDITION THRU SUMMER 1983 ADDENDA.
2. ALL FLAT SURFACES 250 RMS.
3. CLAD AND OVERLAY SURFACES 125 RMS EQUIVALENT.
4. OVERLAY THICKNESS 0.1"T AFTER PREPARATION.

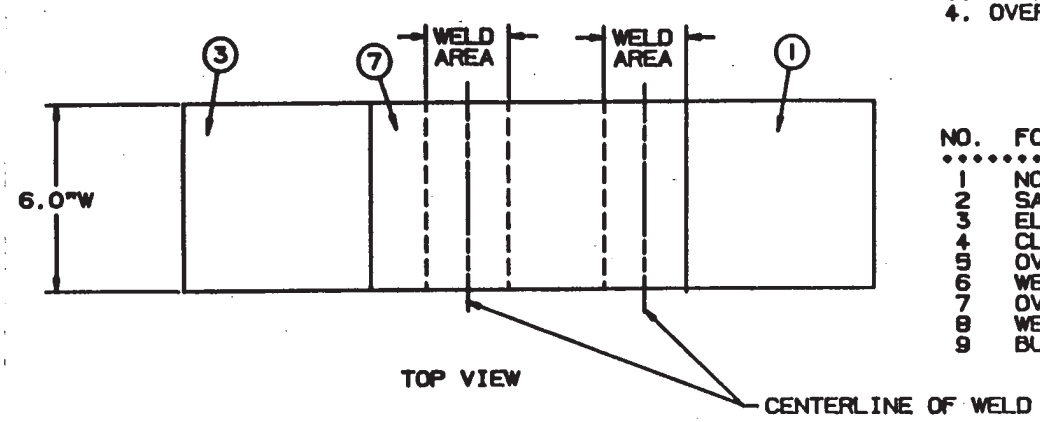

TOP VIEW

NO.	FORM	PROCESS	TYPE	SPEC.
1	NOZZLE	FORGING	ALLOY STL.	A 508 CL.2
2	SAFE-END	PLATE	STA.STL.	TYPE 316
3	ELBOW	CAST	STA.STL.	A-351- GRCF8A
4	CLADDING	WELD DPT.	STA. STL.	TYPE 308/309
5	OVERLAY	WELD DPT.	INCONEL	SFA-5.11(ENICRFE-3)
6	WELD	WELDED	INCONEL	SFA-5.11(ENICRFE-3)
7	OVERLAY	WELD DPT.	STA. STL.	TYPE 308
8	WELD	WELDED	STA. STL.	TYPE 308(SFA 5.4)
9	BUTTER	WELDED	INCONEL	SFA-511(INICRFE-3) 0.25"T NOMINAL

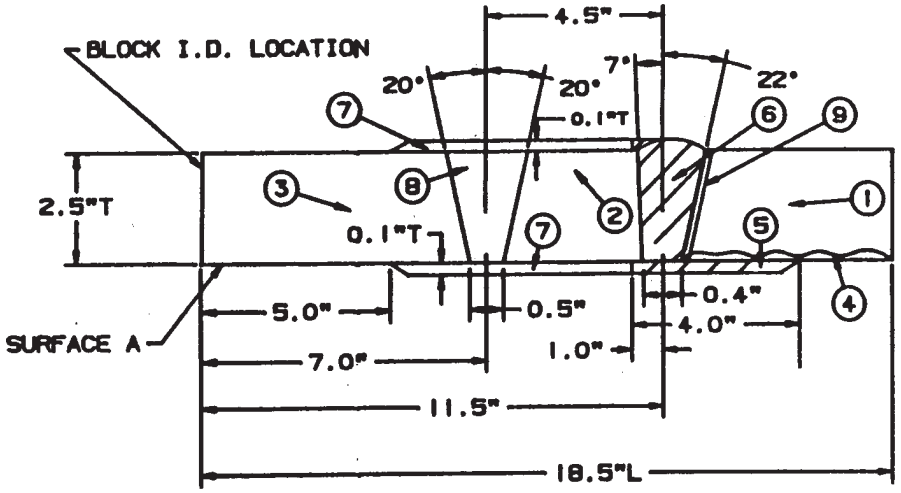

FRONT VIEW

COMPUTER SYSTEM PLANT MODELING

NSSD TECHNICAL APPROVAL Larry E. Mathis	07-21-87	Westinghouse Electric Corporation PLANT ENGINEERING DIVISION - PITTSBURGH, PA
LEVEL III APPROVAL	7.27.87	TITLE CALIBRATION BLOCK INT-46 (SH.2 OF 2) REACTOR VESSEL SAFE-END AND REACTOR COOLANT PIPE TO SPOOL A508 CLASS 2 CARBON STEEL; A-351-GR-CF8A FORGING; TP 316 STAINLESS STEEL HEAT NO.: 31-3212;87126;K57396
PRODUCT ASSURANCE APPROVAL	7/27/87	
PRODUCT LINE APPROVAL	7/24/87	SIZE C — DR. NO. INT-206 — REV. 1

REVISION

ATTACHMENT 2

WELD VOLUMETRIC COVERAGE ASSESSMENT

1989 Exams

COMPONENT DATA

Program Plan Item No.: 10 Weld No.: 1 Loop/Line No.: PRESSURIZER Drawing No.: 1-2100

Component Type: ☐ Piping ☑ Vessel Configuration: BOTTOM HEAD-TO-SHELL WELD (C/S WITH S/S CLAD)

Outside Diameter: 92.375" Nominal Wall: 4.76" Circumference: 290.05"

WELD & REQUIRED VOLUME DATA

Axial Area: 32.4 Square Inches

WRV Length: 100.0 Inches (Circumferential)

WRV Volume: 3,240 Cubic Inches

EXAMINATION ACCESS

☑ Two Side Access ☐ One Side Access

☐ Unobstructed ☐ Unobstructed

☐ One Side Obstructed ☐ Obstructed

* ☑ Two Sides Obstructed

EXAMINATION COVERAGE

Examination Angle: 45°

A. 1/2 Vee-Path Technique (one Beam-Direction) Central Axis Projection

Side of Weld 2	Side of Weld 2 (INSTR. LIMITATION)
WRV Limits a-b-f-i	WRV Limits m-n-b-f-i
Effective Length 93.0 Inches	Effective Length 3.5 Inches
Axial Area 19.80 Sq. In.	Axial Area 17.02 Sq. In.
Effective Volume 1,841 Cu. In.	Effective Volume 59.6 Cu. In.

Total Effective Volume: 1,900 Cubic Inches

Percentage of WRV Examined Via This Technique: 58.6 %

B. 1/2 Vee-Path Technique (one Beam-Direction) Central Axis Projection

Side of Weld N/A	Side of Weld 5
WRV Limits ____	WRV Limits e-g-c-h-j
Effective Length ____ Inches	Effective Length 96.5 Inches
Axial Area ____ Sq. In.	Axial Area 21.0 Sq. In.
Effective Volume N/A Cu. In.	Effective Volume 2,027 Cu. In.

Total Effective Volume: 2,027 Cubic Inches

Percentage of WRV Examined Via This Technique: 62.6 %

C. 1/2 Vee-Path Technique (Two Beam-Directions) Central Axis Projection

Side of Weld 2/5	Side of Weld ____
WRV Limits e-k-l-j	WRV Limits ____
Effective Length 93.0 Inches	Effective Length ____ Inches
Axial Area 3.83 Sq. In.	Axial Area ____ Sq. In.
Effective Volume 356 Cu. In.	Effective Volume ____ Cu. In.

Total Effective Volume: 356 Cubic Inches

Percentage of WRV Examined Via This Technique 11.0 %

REMARKS

* SIDE (2): ONE (2"X2") WELDED PAD OBSTRUCTS 3.5" OF WELD LENGTH. (NO EXAM) TWO (1"ø) INSTRUMENTATION LINES LIMIT 3.5" OF WELD LENGTH (LIMITED EXAM IN INSTRUMENTATION LINE REGIONS). HEAD CURVATURE ALSO LIMITS SCANNING.

SIDE (5): INSULATION (4.5" FROM WELD ℄) LIMITS THE SCAN SURFACE FOR COMPLETE LENGTH OF WELD. ONE (2"X2") WELDED PAD OBSTRUCTS SCANNING IN THAT LOCATION (NO EXAM)

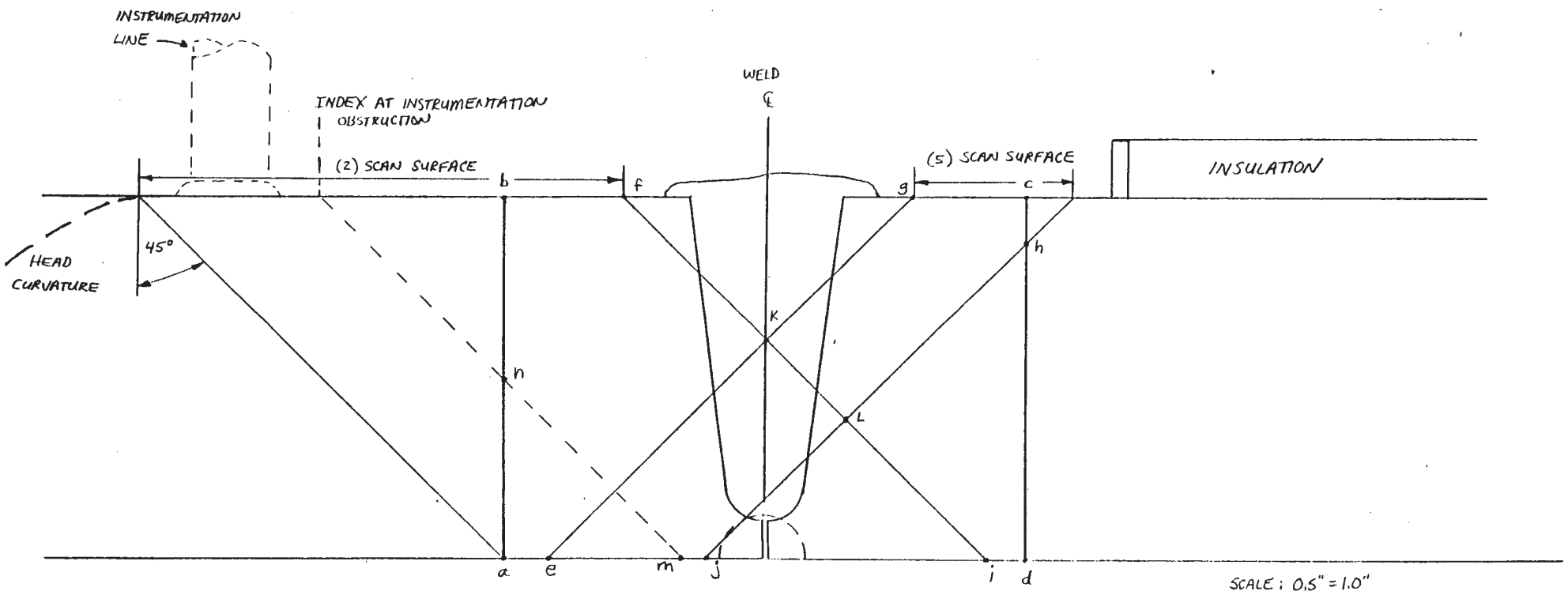

REFERENCE:

WESTINGHOUSE DRAWING # 681J258
" " # 4462D26

WELD VOLUMETRIC COVERAGE ASSESSMENT

1989 Exams

COMPONENT DATA

Program Plan Item No.: 10 Weld No.: 1 Loop/Line No.: PRESSURIZER Drawing No.: 1-2100

Component Type: ☐ Piping ☑ Vessel Configuration: BOTTOM HEAD-TO-SHELL WELD (C/S WITH S/S CLAD)

Outside Diameter: 92.375" Nominal Wall: 4.76" Circumference: 290.05"

WELD & REQUIRED VOLUME DATA

Axial Area: 32.4 Square Inches

WRV Length: 100.0 Inches (Circumferential)

WRV Volume: 3,240 Cubic Inches

EXAMINATION ACCESS

☑ Two Side Access ☐ One Side Access

☐ Unobstructed ☐ Unobstructed

☐ One Side Obstructed ☐ Obstructed

* ☑ Two Sides Obstructed

EXAMINATION COVERAGE

Examination Angle: 60 °

A. 1/2 Vee-Path Technique (one Beam-Direction) Central Axis Projection

Side of Weld 2	Side of Weld 2 (INSTR. LIMITATION)
WRV Limits g-b-h-K-d-L	WRV Limits R-B-h-K-d-Q
Effective Length 93.0 Inches	Effective Length 3.5 Inches
Axial Area 21.2 Sq. In.	Axial Area 15.0 Sq. In.
Effective Volume 1,972 Cu. In.	Effective Volume 52.5 Cu. In.

Total Effective Volume: 2025 Cubic Inches

Percentage of WRV Examined Via This Technique: 62.5 %

B. 1/2 Vee-Path Technique (one Beam-Direction) Central Axis Projection

Side of Weld N/A	Side of Weld 5
WRV Limits _____	WRV Limits e-f-i-c-J
Effective Length ____ Inches	Effective Length 96.5 Inches
Axial Area _____ Sq. In.	Axial Area 5.17 Sq. In.
Effective Volume N/A Cu. In.	Effective Volume 499 Cu. In.

Total Effective Volume: 499 Cubic Inches

Percentage of WRV Examined Via This Technique: 15.4 %

C. 1/2 Vee-Path Technique (Two Beam-Directions) Central Axis Projection

Side of Weld 2/5	Side of Weld N/A
WRV Limits m-n-o-P	WRV Limits _____
Effective Length 93.0 Inches	Effective Length ____ Inches
Axial Area 3.74 Sq. In.	Axial Area _____ Sq. In.
Effective Volume 348 Cu. In.	Effective Volume N/A Cu. In.

Total Effective Volume: 348 Cubic Inches

Percentage of WRV Examined Via This Technique 10.7 %

REMARKS

* SIDE (2): ONE (2"X2") WELDED PAD OBSTRUCTS 3.5" OF WELD LENGTH (NO EXAM THERE)
TWO (1" ø) INSTRUMENTATION LINES LIMIT 3.5" OF WELD LENGTH (LIMITED EXAM IN INSTRUMENTATION LINE REGIONS)

SIDE (5): INSULATION (4.5" FROM WELD ℄) LIMITS THE SCAN SURFACE FOR COMPLETE LENGTH OF WELD. ONE (2"X2") WELDED PAD OBSTRUCTS SCAN IN THAT LOCATION (NO EXAM).

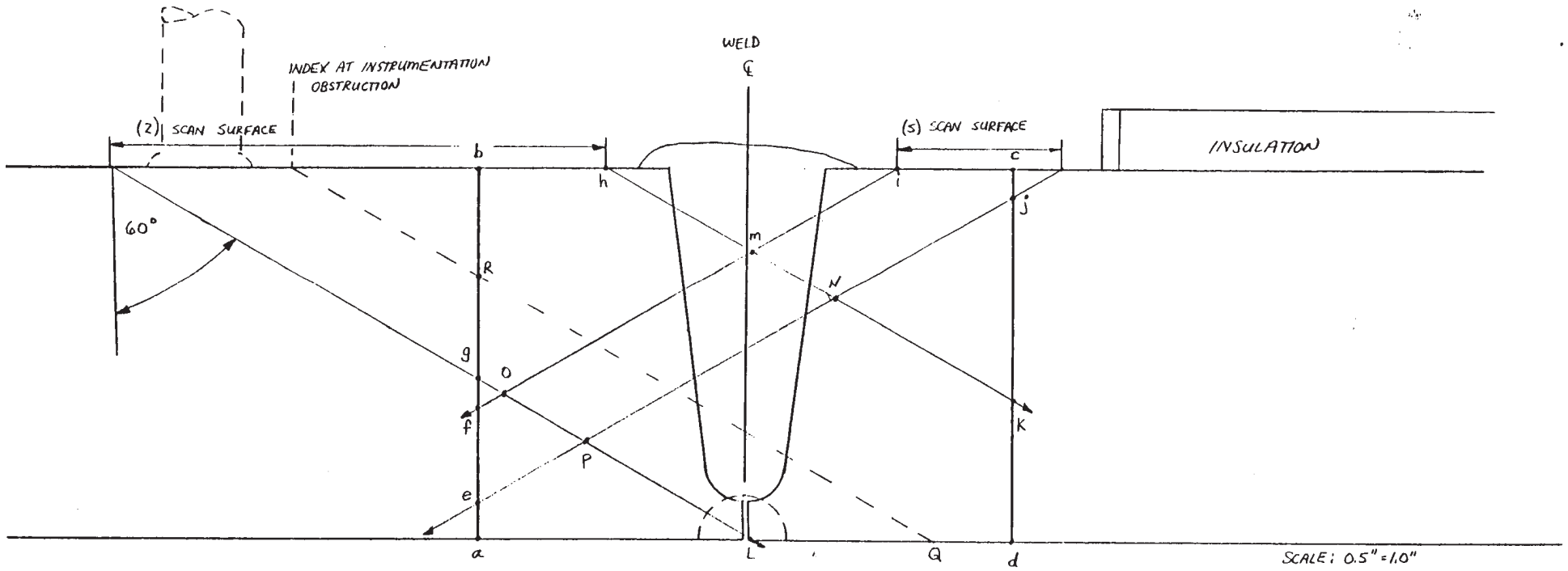

REFERENCE:

WESTINGHOUSE DRAWING # 6815258

" " # 4462D26

WELD VOLUMETRIC COVERAGE ASSESSMENT

1990 Exams

COMPONENT DATA

ram Plan Item No.: 10 Weld No.: 1 Loop/Line No.: PRESSURIZER Drawing No.: 1-2100

onent Type: ☐ Piping ☑ Vessel Configuration: BOTTOM HEAD-TO-SHELL WELD (C/S WITH S/S CLAD)

Outside Diameter: 92.375" Nominal Wall: 4.76" Circumference: 290.05"

WELD & REQUIRED VOLUME DATA

Axial Area: 32.4 Square Inches

WRV Length: 100.0 Inches (Circumferential)

WRV Volume: 3,240 Cubic Inches

EXAMINATION ACCESS

☑ Two Side Access	☐ One Side Access
☐ Unobstructed	☐ Unobstructed
☐ One Side Obstructed	☐ Obstructed
* ☑ Two Sides Obstructed	

EXAMINATION COVERAGE

Examination Angle 45°

A. 1/2 Vee-Path Technique (One Beam-Directions) Central Axis Projection

Side of Weld 2	Side of Weld 2
WRV Limits a-b-f-i	WRV Limits m-n-b-f-i
Effective Length 89.5 Inches	Effective Length 3.5 Inches
Axial Area 19.80 Sq. In.	Axial Area 17.02 Sq. In.
Effective Volume 1,772 Cu. In.	Effective Volume 59.6 Cu. In.

Total Effective Volume: 1,832 Cubic Inches
Percentage of WRV Examined Via This Technique: 56.5 %
Percentage of WRV ID Surface Region Examined: ____ %

B. 1/2 Vee-Path Technique (one Beam-Directions) Central Axis Projection

Side of Weld N/A	Side of Weld 5
WRV Limits _____	WRV Limits e-g-c-h-j
Effective Length ____ Inches	Effective Length 93.0 Inches
Axial Area _____ Sq. In.	Axial Area 21.0 Sq. In.
Effective Volume N/A Cu. In.	Effective Volume 1,953 Cu. In.

Total Effective Volume: 1,953 Cubic Inches
Percentage of WRV Examined Via This Technique: 60.3 %
Percentage of WRV ID Surface Region Examined: ____ %

C. 1/2 Vee-Path Technique (Two Beam-Directions) Central Axis Projection

Side of Weld 2/5	Side of Weld N/A
WRV Limits e-k-j-L	WRV Limits _____
Effective Length 89.5 Inches	Effective Length ____ Inches
Axial Area 3.83 Sq. In.	Axial Area _____ Sq. In.
Effective Volume 343 Cu. In.	Effective Volume N/A Cu. In.

Total Effective Volume: 343 Cubic Inches
Percentage of WRV Examined Via This Technique 10.6 %
Percentage of WRV ID Surface Region Examined ____ %

ARKS

* SIDE (2) TWO (2"X2") WELDED PADS OBSTRUCT 7.0" OF WELD LENGTH, AND TWO (1"Ø) INSTRUMENTATION LINES OBSTRUCT 3.5" OF WELD LENGTH. (LIMITED EXAM AT INSTR. LINES, NO EXAM AT WELDED PAD SITES)
SIDE (5) TWO (2"X2") WELDED PADS OBSTRUCT 7.0" OF WELD LENGTH (NO EXAM THERE), AND INSULATION (4.5" FROM WELD ℄) LIMITS ENTIRE LENGTH OF WELD.

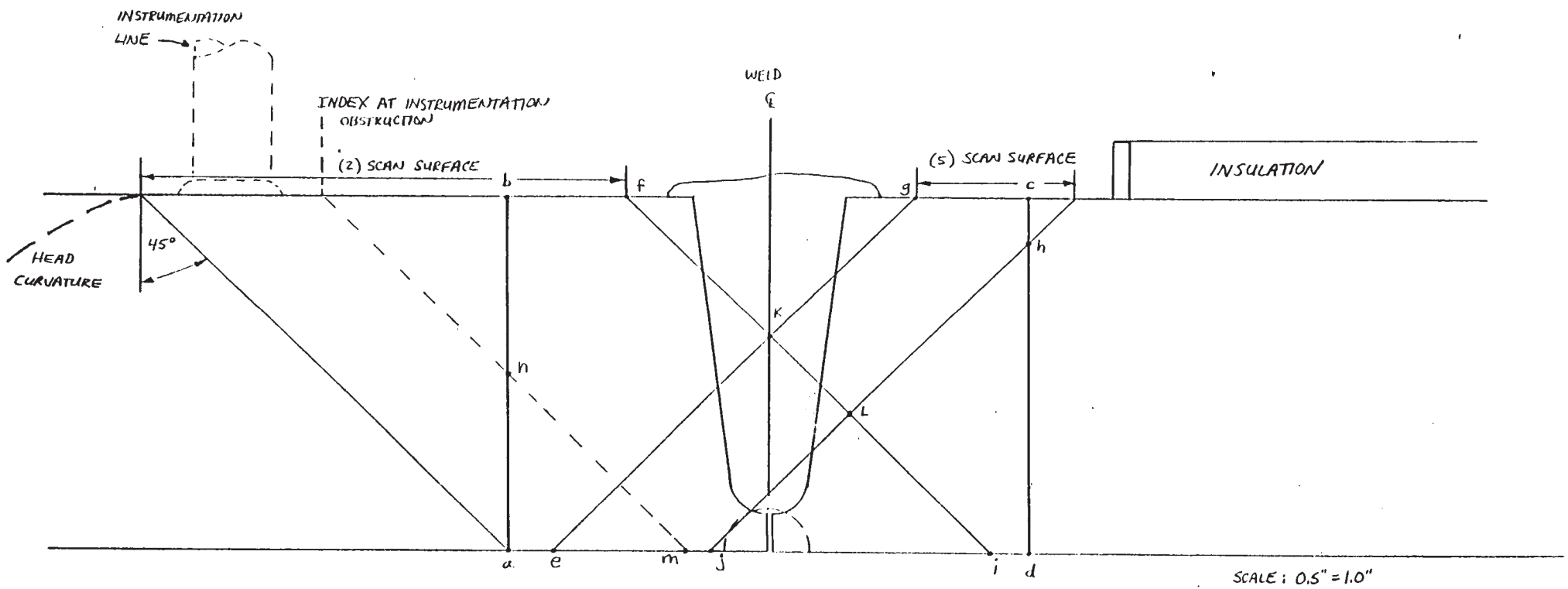

REFERENCE:

WESTINGHOUSE DRAWING # 681J258

" " # 4462D26

WELD VOLUMETRIC COVERAGE ASSESSMENT

1990 Exams

COMPONENT DATA

Program Plan Item No.: 10 Weld No.: 1 Loop/Line No.: PRESSURIZER Drawing No.: 1-2100

Component Type: ☐ Piping ☑ Vessel Configuration: BOTTOM HEAD-TO-SHELL WELD (c/s WITH s/s CLAD)

Outside Diameter: 92.375" Nominal Wall: 4.76" Circumference: 290.05

WELD & REQUIRED VOLUME DATA

Axial Area: 32.4 Square Inches

WRV Length: 100.0 Inches (Circumferential)

WRV Volume: 3,240 Cubic Inches

EXAMINATION ACCESS

☑ Two Side Access ☐ One Side Access

☐ Unobstructed ☐ Unobstructed

☐ One Side Obstructed ☐ Obstructed

* ☑ Two Sides Obstructed

EXAMINATION COVERAGE

Examination Angle 60 °

A. 1/2 Vee-Path Technique (One Beam-Directions) Central Axis Projection

Side of Weld 2	Side of Weld 2 (INSTR. LIMITATION)
WRV Limits g-b-h-K-d-L	WRV Limits R-B-H-K-d-Q
Effective Length 89.5 Inches	Effective Length 3.5 Inches
Axial Area 21.2 Sq. In.	Axial Area 15.0 Sq. In.
Effective Volume 1,897 Cu. In.	Effective Volume 52.5 Cu. In.

Total Effective Volume: 1,950 Cubic Inches
Percentage of WRV Examined Via This Technique: 60.2 %
Percentage of WRV ID Surface Region Examined: ____ %

B. 1/2 Vee-Path Technique (one Beam-Directions) Central Axis Projection

Side of Weld N/A	Side of Weld 5
WRV Limits _____	WRV Limits e-f-i-c-J
Effective Length ____ Inches	Effective Length 93.0 Inches
Axial Area _____ Sq. In.	Axial Area 5.17 Sq. In.
Effective Volume N/A Cu. In.	Effective Volume 481 Cu. In.

Total Effective Volume: 481 Cubic Inches
Percentage of WRV Examined Via This Technique: 14.8 %
Percentage of WRV ID Surface Region Examined: ____ %

C. 1/2 Vee-Path Technique (Two Beam-Directions) Central Axis Projection

Side of Weld 2/5	Side of Weld N/A
WRV Limits m-n-o-P	WRV Limits _____
Effective Length 89.5 Inches	Effective Length ____ Inches
Axial Area 3.74 Sq. In.	Axial Area _____ Sq. In.
Effective Volume 335 Cu. In.	Effective Volume N/A Cu. In.

Total Effective Volume: 335 Cubic Inches
Percentage of WRV Examined Via This Technique 10.3 %
Percentage of WRV ID Surface Region Examined ____ %

REMARKS

* SIDE (2) TWO (2"X2") WELDED PADS OBSTRUCT 7.0" OF WELD LENGTH, AND TWO (1.0" Ø) INSTRUMENTATION LINES OBSTRUCT 3.5" OF WELD LENGTH. (LIMITED EXAM AT INSTR. LINES, NO EXAM AT WELDED PAD SITES)
SIDE (5) TWO (2"X2") WELDED PADS OBSTRUCT 7.0" OF WELD LENGTH (NO EXAM THERE), AND INSULATION (4.5" FROM WELD ℄) LIMITS ENTIRE LENGTH OF WELD.

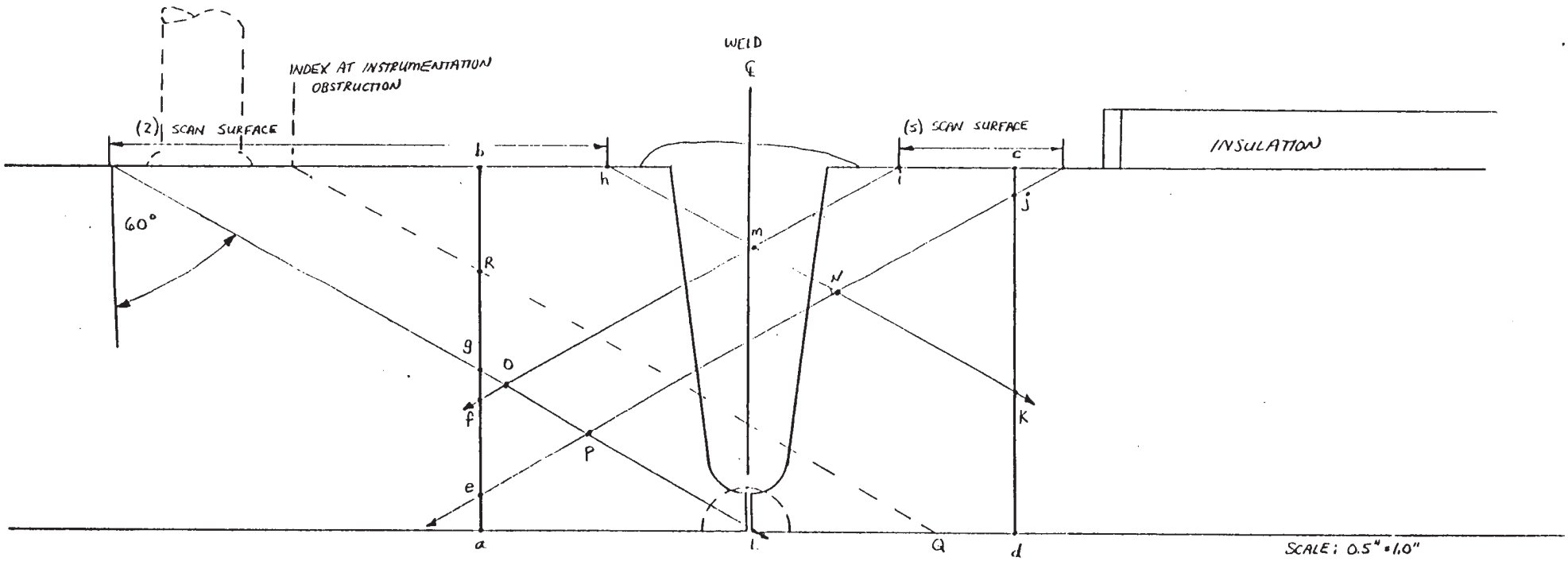

REFERENCE:

WESTINGHOUSE DRAWING # 681J258
" " # 4462 D26

ATTACHMENT 3

PRESSURIZER

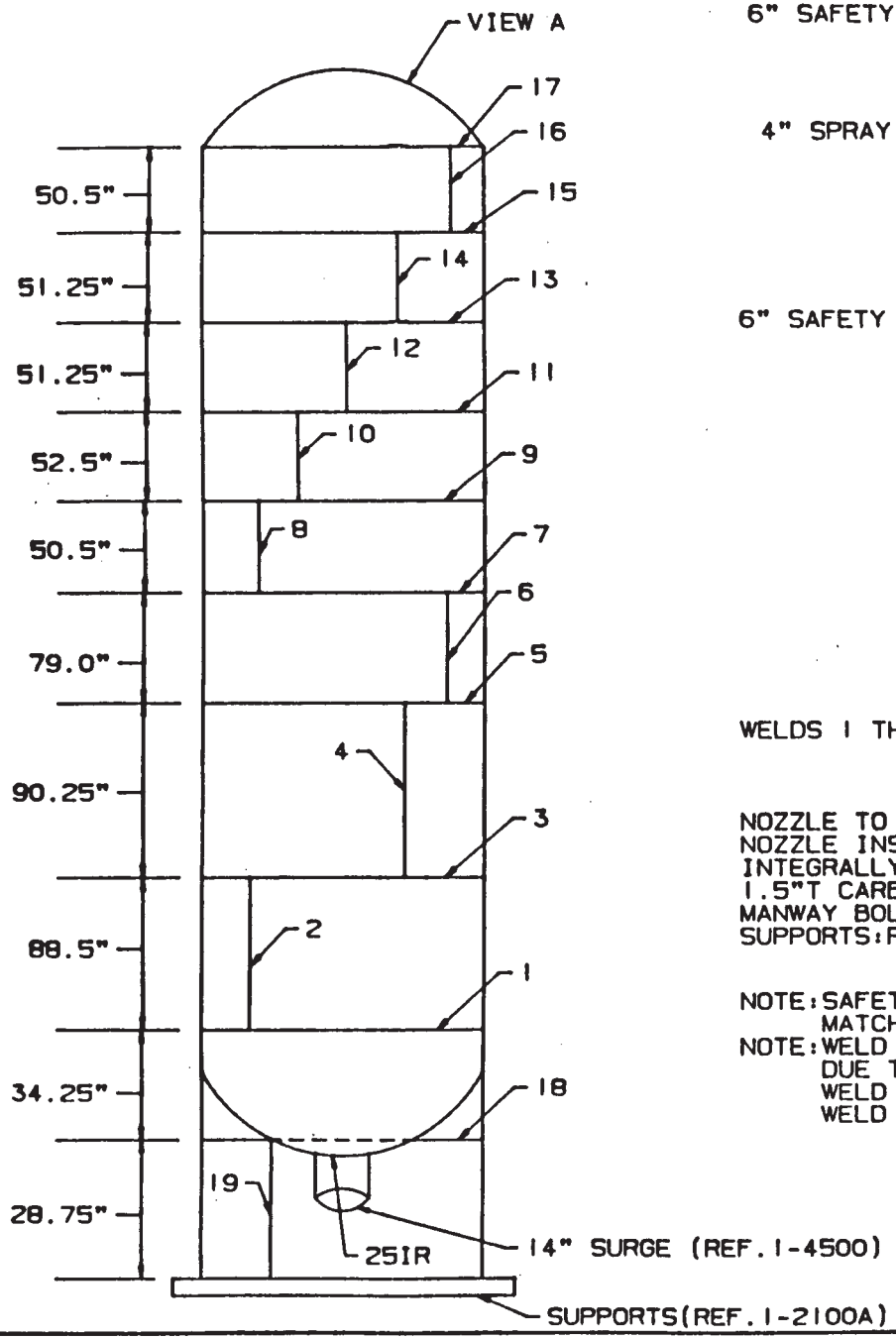

VIEW A

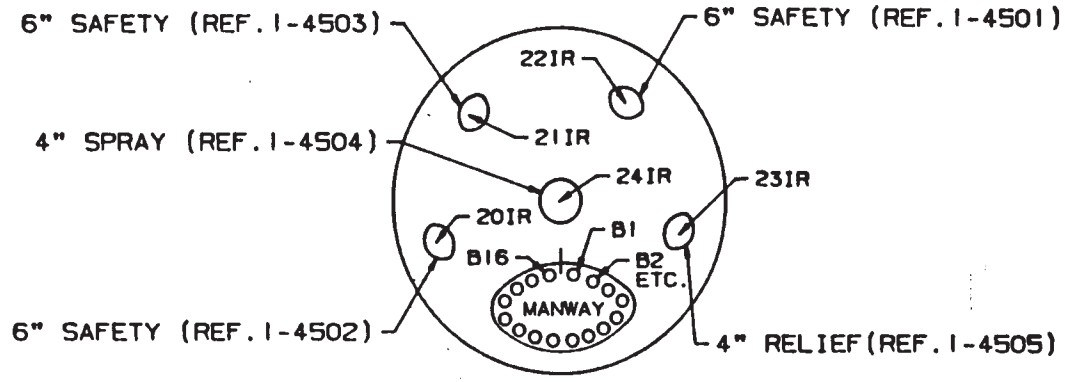

WELDS 1 THRU 17: SHELL: 4.75"T SA 302 GRADE B CARBON STEEL
UPPER & LOWER HEAD: 4.75"T SA216 GRADE WCC CARBON STEEL
DIAMETER: 92.375"; CIRCUMFERENCE: 290.05"
NOZZLE TO VESSEL WELDS: NOT APPLICABLE
NOZZLE INSIDE RADIUS SECTION: 20IR THRU 25IR
INTEGRALLY WELDED ATTACHMENT SUPPORT SKIRT WELDS 18 & 19:
1.5"T CARBON STEEL PLATE TO SA516 GRADE 70 CARBON STEEL
MANWAY BOLTING: 16-1.88" DIAMETER
SUPPORTS: REF. INT-1-2100A

NOTE: SAFETY NOZZLE LOCATIONS TO BE CHANGED TO MATCH CON.ED. DRAWING A210232.
NOTE: WELD 2-0" TO 15" (ADJACENT WELD 1) INACCESSIBLE DUE TO PERMANENT INSULATION.
WELD 19 LOCATED 35" CCW FROM WELD 2.

NEW YORK POWER AUTHORITY INDIAN POINT UNIT NO.3	
PRESSURIZER RCPCPR1	
INT-1-2100	REV. 6

ATTACHMENT 4

WELD VOLUMETRIC COVERAGE ASSESSMENT

1990 Exams

COMPONENT DATA

gram Plan Item No.: 72 Weld No.: 31-2 Loop/Line No.: REPLACEMENT STEAM GENERATOR -31 Drawing No.: 2-1101

onent Type: ☐ Piping ☑ Vessel Configuration: TUBESHEET-TO- SHELL WELD (c/s)

Outside Diameter: 129.25" Nominal Wall: 4.15" Circumference: 405.84"

WELD & REQUIRED VOLUME DATA

Axial Area: 9.13 Square Inches

WRV Length: 135.0 Inches (Circumferential)

WRV Volume: 1,233 Cubic Inches

EXAMINATION ACCESS

☑ Two Side Access ☐ One Side Access

☐ Unobstructed ☐ Unobstructed

☐ One Side Obstructed ☐ Obstructed

☑ Two Sides Obstructed

EXAMINATION COVERAGE

Examination Angle 45 °

A. 1/2 Vee-Path Technique (One Beam-Directions) Central Axis Projection

Side of Weld 2 (OBSTRUCTED-NOZZLES)
WRV Limits e-b-c-d
*Effective Length 6.90 Inches
Axial Area 5.91 Sq. In.
Effective Volume 40.8 Cu. In.

Side of Weld 2 (UNOBSTRUCTED)
WRV Limits a-b-c-d
*Effective Length 128.1 Inches
Axial Area 9.13 Sq. In.
Effective Volume 1,170 Cu. In.

Total Effective Volume: 1,211 Cubic Inches
Percentage of WRV Examined Via This Technique: 98.2 %
Percentage of WRV ID Surface Region Examined: 99.9 %

B. 1/2 Vee-Path Technique (one Beam-Directions) Central Axis Projection

Side of Weld N/A
WRV Limits _____
Effective Length ____ Inches
Axial Area _____ Sq. In.
Effective Volume N/A Cu. In.

Side of Weld 5
WRV Limits d-c-b-a
**Effective Length 120 Inches
Axial Area 9.13 Sq. In.
Effective Volume 1,096 Cu. In.

Total Effective Volume: 1,096 Cubic Inches
Percentage of WRV Examined Via This Technique: 88.9 %
Percentage of WRV ID Surface Region Examined: 88.9 %

C. 1/2 Vee-Path Technique (Two Beam-Directions) Central Axis Projection

Side of Weld 2/5 (2" NOZZLE AREA)
WRV Limits e-b-c-d
Effective Length 2.40 Inches
Axial Area 5.91 Sq. In.
Effective Volume 14.2 Cu. In.

Side of Weld 2/5 (UNOBSTRUCTED)
WRV Limits a-b-c-d
Effective Length 117.6 Inches
Axial Area 9.13 Sq. In.
Effective Volume 1074 Cu. In.

Total Effective Volume: 1074 Cubic Inches
Percentage of WRV Examined Via This Technique 87.1 %
Percentage of WRV ID Surface Region Examined 88.9 %

IARKS

* ONE (2"OD) NOZZLE LIMITS 2.4" OF WELD, AND ONE (4"OD) NOZZLE LIMITS 4.5" OF WELD LENGTH (TOTAL OF 6.9" OBSTRUCTED FROM (2) SIDE OF WELD.)

** ONE (14"OD) HANDHOLE LIMITS 15.0" OF WELD LENGTH FROM (5) SIDE OF WELD

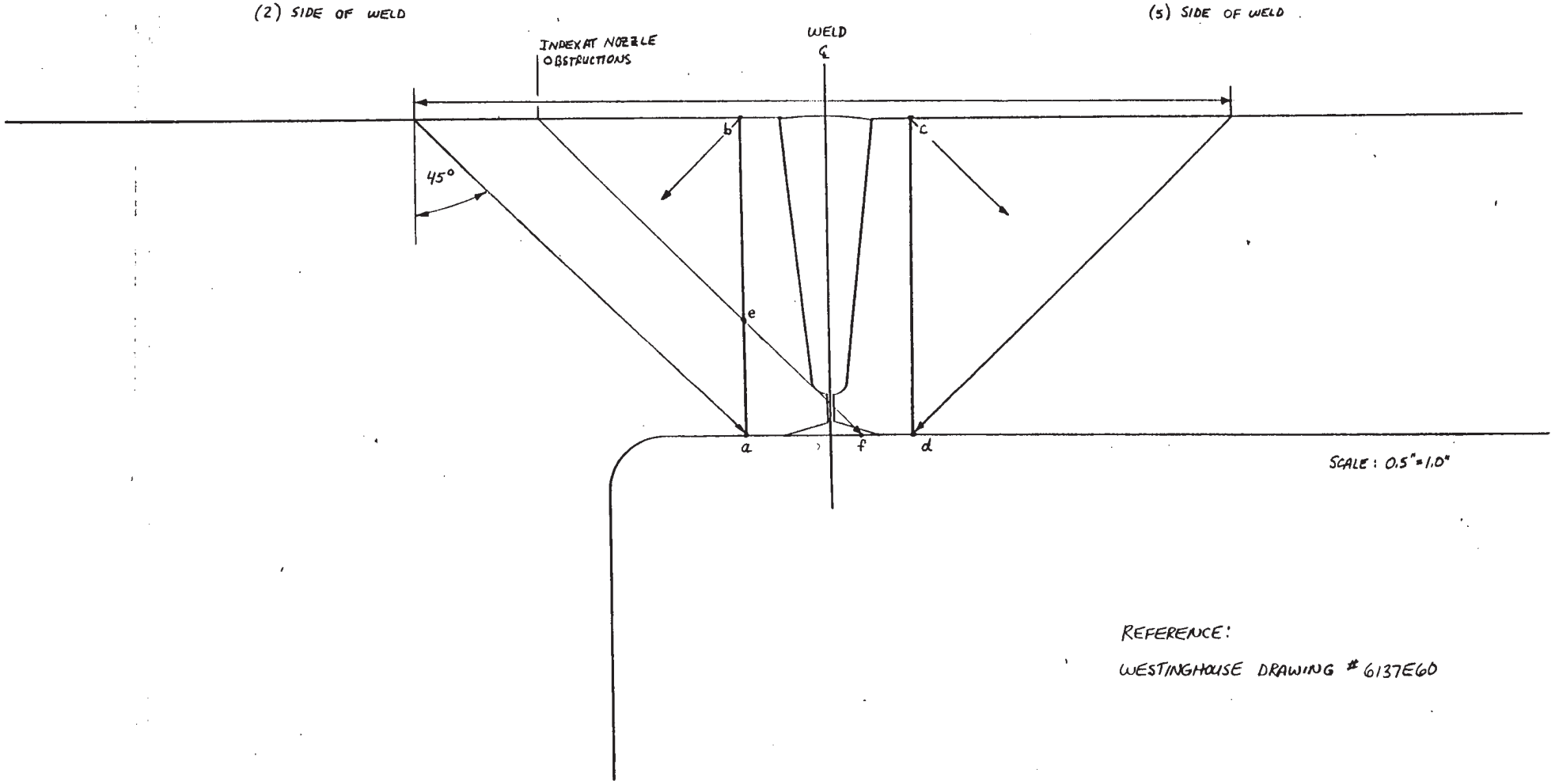

REFERENCE:

WESTINGHOUSE DRAWING # 6137E60

WELD VOLUMETRIC COVERAGE ASSESSMENT

1990 Exams

COMPONENT DATA

gram Plan Item No.: 72 Weld No.: 31-2 Loop/Line No.: REPLACEMENT STEAM GENERATOR-31 Drawing No.: 2-1101

onent Type: ☐ Piping ☑ Vessel Configuration: TUBESHEET-TO-SHELL WELD (c/s)

Outside Diameter: 129.25" Nominal Wall: 4.15" Circumference: 405.84"

WELD & REQUIRED VOLUME DATA

Axial Area: 9.13 Square Inches

WRV Length: 135.0 Inches (Circumferential)

WRV Volume: 1,233 Cubic Inches

EXAMINATION ACCESS

☑ Two Side Access ☐ One Side Access

☐ Unobstructed ☐ Unobstructed

☐ One Side Obstructed ☐ Obstructed

☑ Two Sides Obstructed

EXAMINATION COVERAGE

Examination Angle 60 °

A. 1/2 Vee-Path Technique (One Beam-Directions) Central Axis Projection

Side of Weld 2 (OBSTRUCTED-NOZZLES)
WRV Limits e-b-c-f
*Effective Length 6.90 Inches
Axial Area 4.64 Sq. In.
Effective Volume 32.0 Cu. In.

Side of Weld 2 (UNOBSTRUCTED)
WRV Limits a-b-c-d
*Effective Length 128.1 Inches
Axial Area 9.13 Sq. In.
Effective Volume 1,170 Cu. In.

Total Effective Volume: 1,202 Cubic Inches
Percentage of WRV Examined Via This Technique: 97.5 %
Percentage of WRV ID Surface Region Examined: 99.9 %

B. 1/2 Vee-Path Technique (one Beam-Directions) Central Axis Projection

Side of Weld N/A
WRV Limits _____
Effective Length ____ Inches
Axial Area _____ Sq. In.
Effective Volume N/A Cu. In.

Side of Weld 5
WRV Limits d-c-b-a
**Effective Length 120 Inches
Axial Area 9.13 Sq. In.
Effective Volume 1,096 Cu. In.

Total Effective Volume: 1,096 Cubic Inches
Percentage of WRV Examined Via This Technique: 88.9 %
Percentage of WRV ID Surface Region Examined: 88.9 %

C. 1/2 Vee-Path Technique (Two Beam-Directions) Central Axis Projection

Side of Weld 2/5
WRV Limits e-b-c-f
Effective Length 2.40 Inches
Axial Area 4.64 Sq. In.
Effective Volume 11.1 Cu. In.

Side of Weld 2/5
WRV Limits a-b-c-d
Effective Length 117.6 Inches
Axial Area 9.13 Sq. In.
Effective Volume 1,074 Cu. In.

Total Effective Volume: 1,085 Cubic Inches
Percentage of WRV Examined Via This Technique 87.9 %
Percentage of WRV ID Surface Region Examined 88.9 %

ARKS

* ONE (2"OD) NOZZLE LIMITS 2.4" OF WELD LENGTH, AND ONE (4"OD) NOZZLE LIMITS 4.5" OF WELD LENGTH. (TOTAL OF 6.9" OBSTRUCTED FROM (2) SIDE OF WELD)

** ONE (14"OD) HANDHOLE LIMITS 15.0" OF WELD LENGTH FROM (5) SIDE OF WELD.

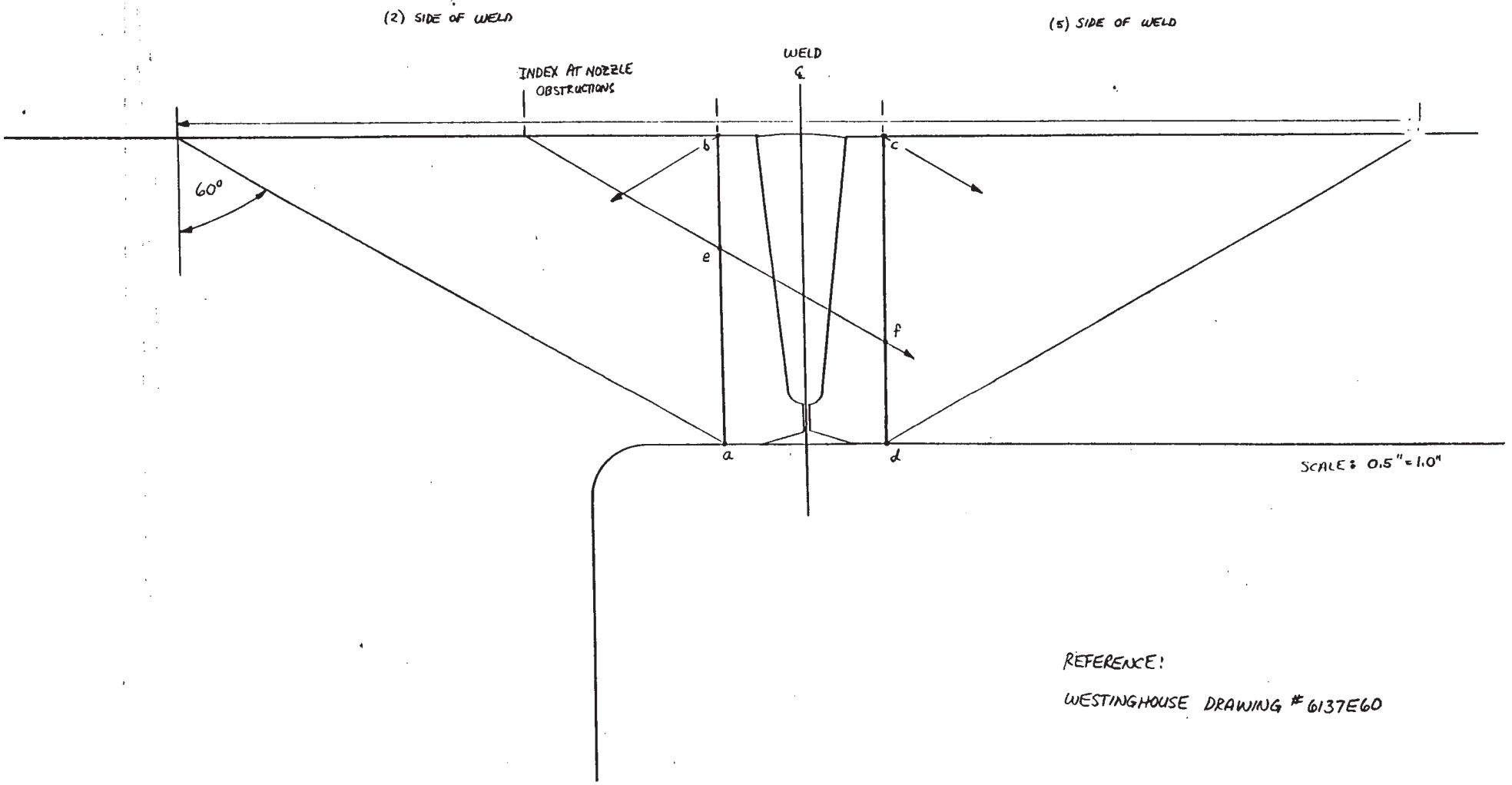

REFERENCE:

WESTINGHOUSE DRAWING # 6137E60

WELD VOLUMETRIC COVERAGE ASSESSMENT

1990 Exams

COMPONENT DATA

gram Plan Item No.: 71 Weld No.: 31-3 Loop/Line No.: REPLACEMENT STEAM GENERATOR Drawing No.: 2-1101

onent Type: ☐ Piping ☑ Vessel Configuration: CIRCUMFERENTIAL SHELL WELD (c/s)

Outside Diameter: 127.0" Nominal Wall: 2.86"/4.15" Circumference: 398.8"

WELD & REQUIRED VOLUME DATA

Axial Area: 5.95 Square Inches

WRV Length: 398.8 Inches (Circumferential)

WRV Volume: 2,373 Cubic Inches

EXAMINATION ACCESS

☑ Two Side Access ☐ One Side Access

☐ Unobstructed ☐ Unobstructed

☐ One Side Obstructed ☐ Obstructed

☑ Two Sides Obstructed

EXAMINATION COVERAGE

Examination Angle 45° o

A. 1/2 Vee-Path Technique (One Beam-Directions) Central Axis Projection

Side of Weld 2
WRV Limits a-e-h
*Effective Length 383.8 Inches
Axial Area 0.40 Sq. In.
Effective Volume 154.0 Cu. In.

Side of Weld N/A
WRV Limits _____
Effective Length ___ Inches
Axial Area _____ Sq. In.
Effective Volume N/A Cu. In.

Total Effective Volume: 154.0 Cubic Inches
Percentage of WRV Examined Via This Technique: 6.5 %
Percentage of WRV ID Surface Region Examined: 42.2 %

B. 1/2 Vee-Path Technique (one Beam-Directions) Central Axis Projection

Side of Weld N/A
WRV Limits _____
Effective Length ____ Inches
Axial Area _____ Sq. In.
Effective Volume N/A Cu. In.

Side of Weld 5
WRV Limits d-c-g-f-a
**Effective Length 368.8 Inches
Axial Area 5.34 Sq. In.
Effective Volume 1,969 Cu. In.

Total Effective Volume: 1,969 Cubic Inches
Percentage of WRV Examined Via This Technique: 83.0 %
Percentage of WRV ID Surface Region Examined: 92.5 %

C. 1/2 Vee-Path Technique (Two Beam-Directions) Central Axis Projection

Side of Weld 2/5
WRV Limits a-e-h
**Effective Length 368.8 Inches
Axial Area 0.40 Sq. In.
Effective Volume 148.0 Cu. In.

Side of Weld N/A
WRV Limits _____
Effective Length ____ Inches
Axial Area _____ Sq. In.
Effective Volume N/A Cu. In.

Total Effective Volume: 148.0 Cubic Inches
Percentage of WRV Examined Via This Technique 6.2 %
Percentage of WRV ID Surface Region Examined 40.6 %

ARKS

* ONE (14"OD) HANDHOLE RESTRICTS 15.0" OF WELD LENGTH FROM (2) SIDE OF WELD.
** TWO (14"OD) HANDHOLES RESTRICT 30.0" OF WELD LENGTH FROM (5) SIDE OF WELD.

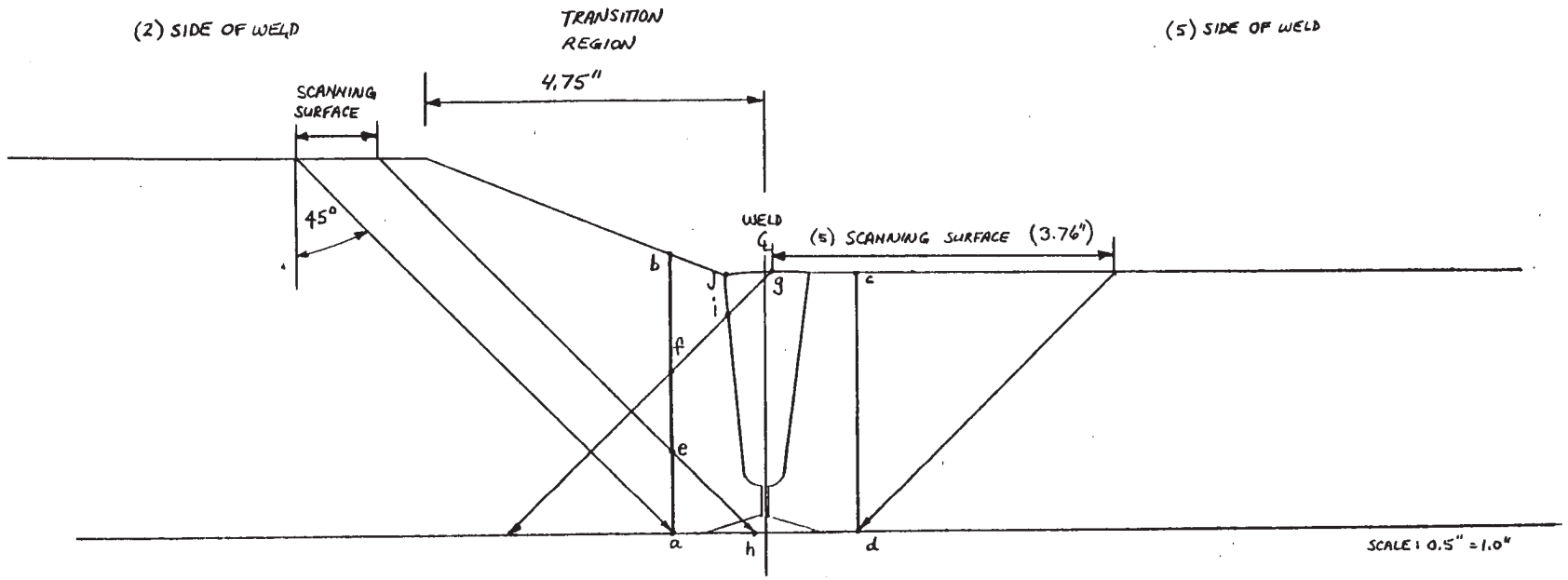

REFERENCE:

WESTINGHOUSE DRAWING # 6137E60

WELD VOLUMETRIC COVERAGE ASSESSMENT

1990 Exams

COMPONENT DATA

Exam Plan Item No.: 71 Weld No.: 31-3 Loop/Line No.: REPLACEMENT STEAM GENERATOR-31 Drawing No.: 2-1101

Component Type: ☐ Piping ☑ Vessel Configuration: CIRCUMFERENTIAL SHELL WELD (C/S)

Outside Diameter: 127.0" Nominal Wall: 2.86"/4.15" Circumference: 398.78

WELD & REQUIRED VOLUME DATA

Axial Area: 5.95 Square Inches

WRV Length: 398.8 Inches (Circumferential)

WRV Volume: 2,373 Cubic Inches

EXAMINATION ACCESS

☑ Two Side Access ☐ One Side Access

☐ Unobstructed ☐ Unobstructed

☐ One Side Obstructed ☐ Obstructed

☑ Two Sides Obstructed

EXAMINATION COVERAGE

Examination Angle 60 °

A. 1/2 Vee-Path Technique (One Beam-Directions) Central Axis Projection

Side of Weld 2
WRV Limits a-e-g-d
*Effective Length 383.8 Inches
Axial Area 3.44 Sq. In.
Effective Volume 1,320 Cu. In.

Side of Weld N/A
WRV Limits
Effective Length ___ Inches
Axial Area ___ Sq. In.
Effective Volume N/A Cu. In.

Total Effective Volume: 1,320 Cubic Inches
Percentage of WRV Examined Via This Technique: 55.6 %
Percentage of WRV ID Surface Region Examined: 96.2 %

B. 1/2 Vee-Path Technique (one Beam-Directions) Central Axis Projection

Side of Weld N/A
WRV Limits
Effective Length ___ Inches
Axial Area ___ Sq. In.
Effective Volume N/A Cu. In.

Side of Weld 5
WRV Limits d-c-f-e-a
**Effective Length 368.8 Inches
Axial Area 5.61 Sq. In.
Effective Volume 2,069 Cu. In.

Total Effective Volume: 2069 Cubic Inches
Percentage of WRV Examined Via This Technique: 87.2 %
Percentage of WRV ID Surface Region Examined: 92.5 %

C. 1/2 Vee-Path Technique (Two Beam-Directions) Central Axis Projection

Side of Weld 2/5
WRV Limits a-e-g-d
**Effective Length 368.8 Inches
Axial Area 3.44 Sq. In.
Effective Volume 1,269 Cu. In.

Side of Weld N/A
WRV Limits
Effective Length ___ Inches
Axial Area ___ Sq. In.
Effective Volume N/A Cu. In.

Total Effective Volume: 1,269 Cubic Inches
Percentage of WRV Examined Via This Technique 53.5 %
Percentage of WRV ID Surface Region Examined 92.5 %

REMARKS

* ONE (14"OD) HANDHOLE LIMITS 15.0" OF WELD LENGTH ON (2) SIDE OF WELD.
** TWO (14.0"OD) HANDHOLES LIMIT 30.0" OF WELD LENGTH ON (5) SIDE OF WELD.

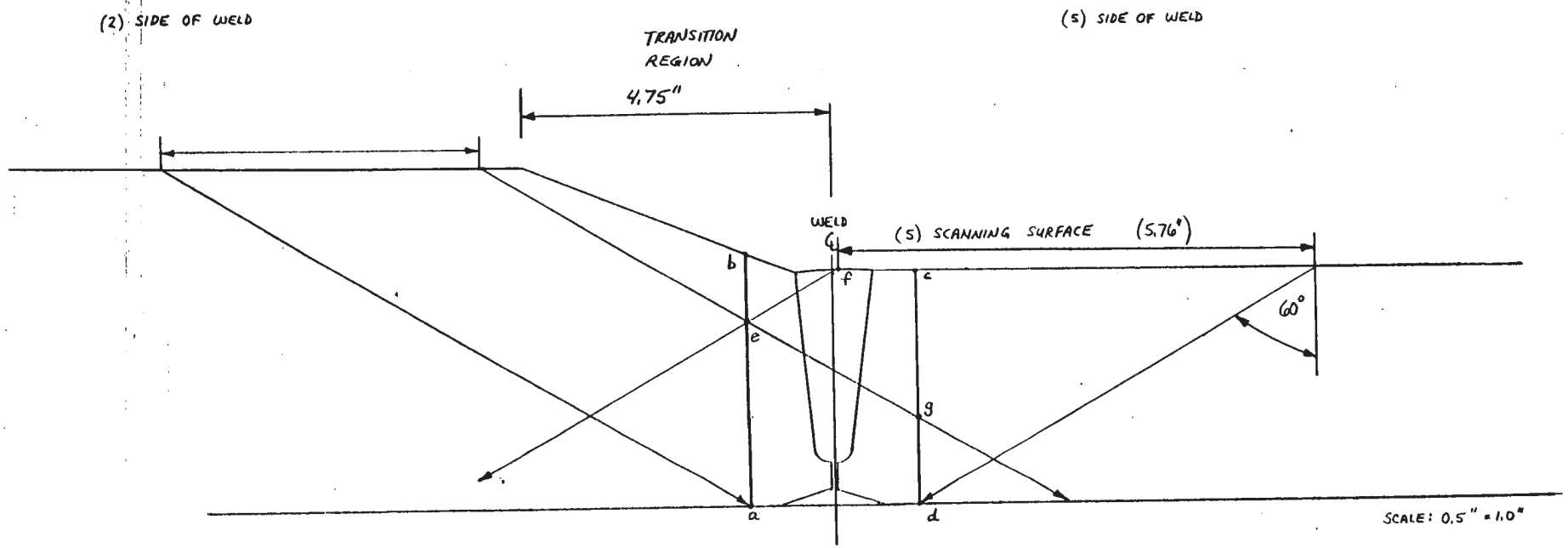

REFERENCE:

WESTINGHOUSE DRAWING # 6137E60

WELD VOLUMETRIC COVERAGE ASSESSMENT

1990 Exams

COMPONENT DATA

Program Plan Item No.: 73 Weld No.: 2 Loop/Line No.: #31 RESIDUAL HEAT EXCHANGER Drawing No.: 2-1120

Component Type: ☐ Piping ☑ Vessel Configuration: SHELL-TO-FLANGE WELD (S/S)

Outside Diameter: 34.5" Nominal Wall: 0.75" Circumference: 108.3

WELD & REQUIRED VOLUME DATA

Axial Area: 1.07 Square Inches

WRV Length: 37.0 Inches (Circumferential)

WRV Volume: 39.59 Cubic Inches

EXAMINATION ACCESS

☐ Two Side Access ☑ One Side Access

☐ Unobstructed ☐ Unobstructed

☐ One Side Obstructed ☑ Obstructed

☐ Two Sides Obstructed

EXAMINATION COVERAGE

Examination Angle: 45 °

A. 1/2 Vee-Path Technique (one Beam-Direction) Central Axis Projection

*Side of Weld 2
WRV Limits f-b-g-j-e
Effective Length 5.0 Inches
Axial Area 0.35 Sq. In.
Effective Volume 1.75 Cu. In.

**Side of Weld 2
WRV Limits a-b-f-h
Effective Length 32.0 Inches
Axial Area 0.37 Sq. In.
Effective Volume 11.80 Cu. In.

Total Effective Volume: 13.55 Cubic Inches
Percentage of WRV Examined Via This Technique: 34.2 %
Percentage of WRV ID Surface Region Examined: 59.9 %

B. Full Vee-Path Technique (one Beam-Direction) Central Axis Projection

*Side of Weld 2
WRV Limits i-c-h-e-j
Effective Length 5.0 Inches
Axial Area 0.29 Sq. In.
Effective Volume 1.45 Cu. In.

**Side of Weld 2
WRV Limits a-b-g-e
Effective Length 32.0 Inches
Axial Area 0.60 Sq. In.
Effective Volume 19.2 Cu. In.

Total Effective Volume: 20.65 Cubic Inches
Percentage of WRV Examined Via This Technique: 52.2 %
Percentage of WRV ID Surface Region Examined 29.6 %

C. Full Vee-Path Technique (Two Beam-Directions) Central Axis Projection

*Side of Weld 2
WRV Limits e-k-j
Effective Length 5.0 Inches
Axial Area 0.11 Sq. In.
Effective Volume 0.55 Cu. In.

**Side of Weld 2
WRV Limits a-b-f-i-e
Effective Length 32.0 Inches
Axial Area 0.32 Sq. In.
Effective Volume 10.2 Cu. In.

Total Effective Volume: 10.75 Cubic Inches
Percentage of WRV Examined Via This Technique 27.2 %
Percentage of WRV ID Surface Region Examined 29.6 %

REMARKS

* A REINFORCEMENT PAD ASSOCIATED WITH AN 8" OD OUTLET NOZZLE LIMITS SCANNING OF WELD #2 OVER A LENGTH OF 5.0".

** THE EXAMINED LENGTH OF WELD #2 WHICH IS UNOBSTRUCTED FROM SIDE (2) IS 32.0". THE EVALUATION OF THIS PORTION OF THE WELD APPEARS IN THE RIGHT SIDE COLUMNS ABOVE

WELD #2

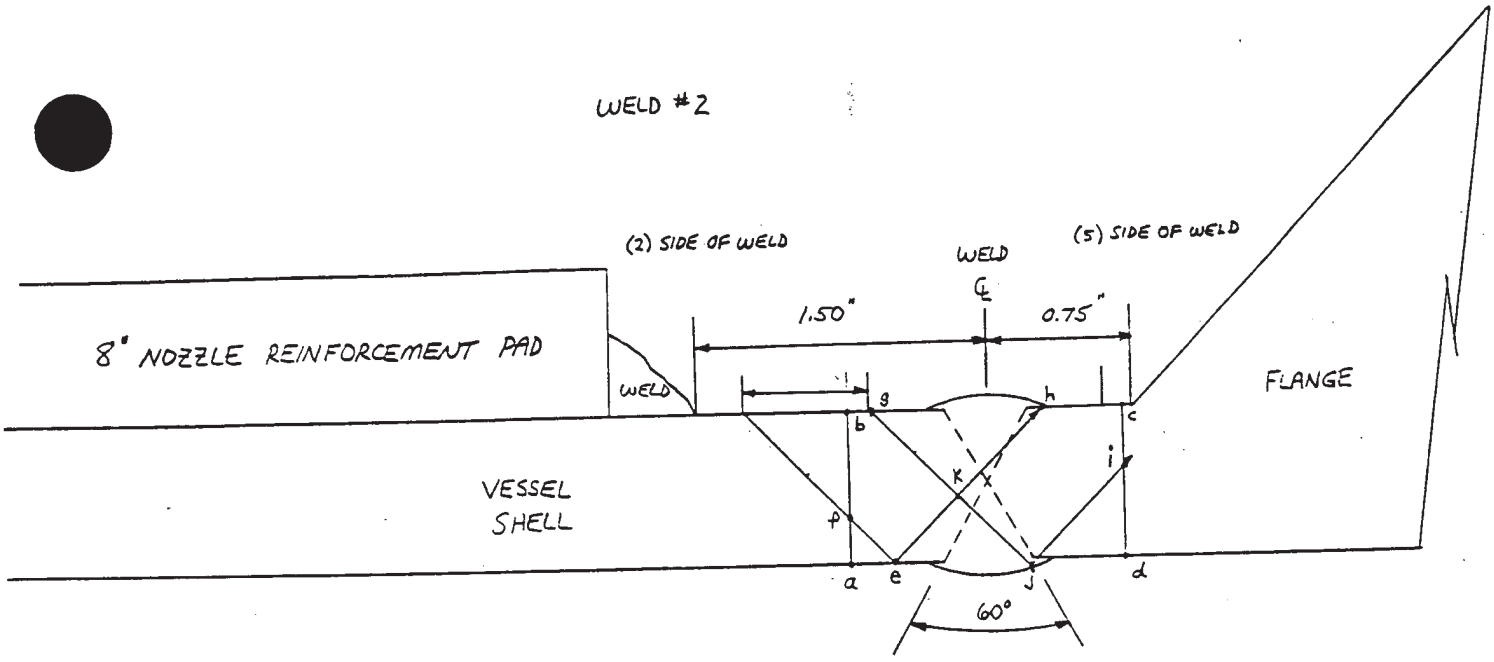

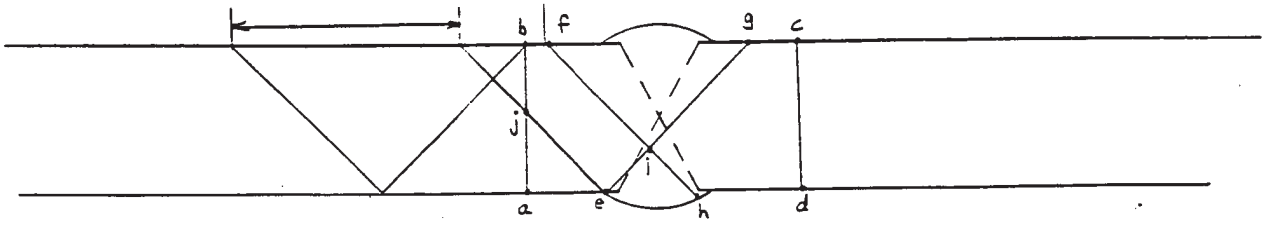

REFERENCE:

ATLAS INDUSTRIAL DRAWING # D-1466-9

WELD VOLUMETRIC COVERAGE ASSESSMENT

1989 Exams

COMPONENT DATA

gram Plan Item No.: 89 Weld No.: 31-2 Loop/Line No.: #31 RESIDUAL HEAT EXCHANGER Drawing No.: 2-1120

onent Type: ☐ Piping ☑ Vessel Configuration: SHELL-TO-FLANGE WELD (S/S

Outside Diameter: 34.5" Nominal Wall: 0.75" Circumference: 108.3"

WELD & REQUIRED VOLUME DATA

Axial Area: 1.07 Square Inches

WRV Length: 37.0 Inches (Circumferential)

WRV Volume: 39.59 Cubic Inches

EXAMINATION ACCESS

☐ Two Side Access	☑ One Side Access
☐ Unobstructed	☐ Unobstructed
☐ One Side Obstructed	☑ Obstructed
☐ Two Sides Obstructed	

EXAMINATION COVERAGE

Examination Angle: 45° 0

A. 1/2 Vee-Path Technique (one Beam-Direction) Central Axis Projection

*Side of Weld 2
WRV Limits f-b-g-j-e
Effective Length 5.0 Inches
Axial Area 0.35 Sq. In.
Effective Volume 1.75 Cu. In.

**Side of Weld 2
WRV Limits a-b-f-h
Effective Length 32.0 Inches
Axial Area 0.37 Sq. In.
Effective Volume 11.8 Cu. In.

Total Effective Volume: 13.55 Cubic Inches
Percentage of WRV Examined Via This Technique: 34.2 %
Percentage of WRV ID Surface Region Examined: 59.9 %

B. Full Vee-Path Technique (one Beam-Direction) Central Axis Projection

*Side of Weld 2
WRV Limits i-c-h-e-j
Effective Length 5.0 Inches
Axial Area 0.29 Sq. In.
Effective Volume 1.45 Cu. In.

**Side of Weld 2
WRV Limits a-b-g-e
Effective Length 32.0 Inches
Axial Area 0.60 Sq. In.
Effective Volume 19.2 Cu. In.

Total Effective Volume: 20.65 Cubic Inches
Percentage of WRV Examined Via This Technique: 52.2 %
Percentage of WRV ID Surface Region Examined 29.6 %

C. Full Vee-Path Technique (Two Beam-Directions) Central Axis Projection

*Side of Weld 2
WRV Limits e-k-j
Effective Length 5.0 Inches
Axial Area 0.11 Sq. In.
Effective Volume .55 Cu. In.

**Side of Weld 2
WRV Limits a-b-f-i-e
Effective Length 32.0 Inches
Axial Area 0.32 Sq. In.
Effective Volume 10.2 Cu. In.

Total Effective Volume: 10.75 Cubic Inches
Percentage of WRV Examined Via This Technique 27.2 %
Percentage of WRV ID Surface Region Examined 29.6 %

ARKS

*A REINFORCEMENT PAD ASSOCIATED WITH AN 8" OD INLET NOZZLE LIMITS SCANNING OF WELD #31-2 OVER A LENGTH OF 5 INCHES, TOTAL WELD LENGTH UNIMPACTED BY THIS LIMITATION IS 32.0 INCHES.

**THE EXAMINED LENGTH OF WELD # 31-2 WHICH IS UNOBSTRUCTED FROM SIDE (2) IS 32.0". THE EVALUATION OF THIS PORTION OF THE WELD APPEARS IN THE RIGHT SIDE COLUMNS ABOVE.

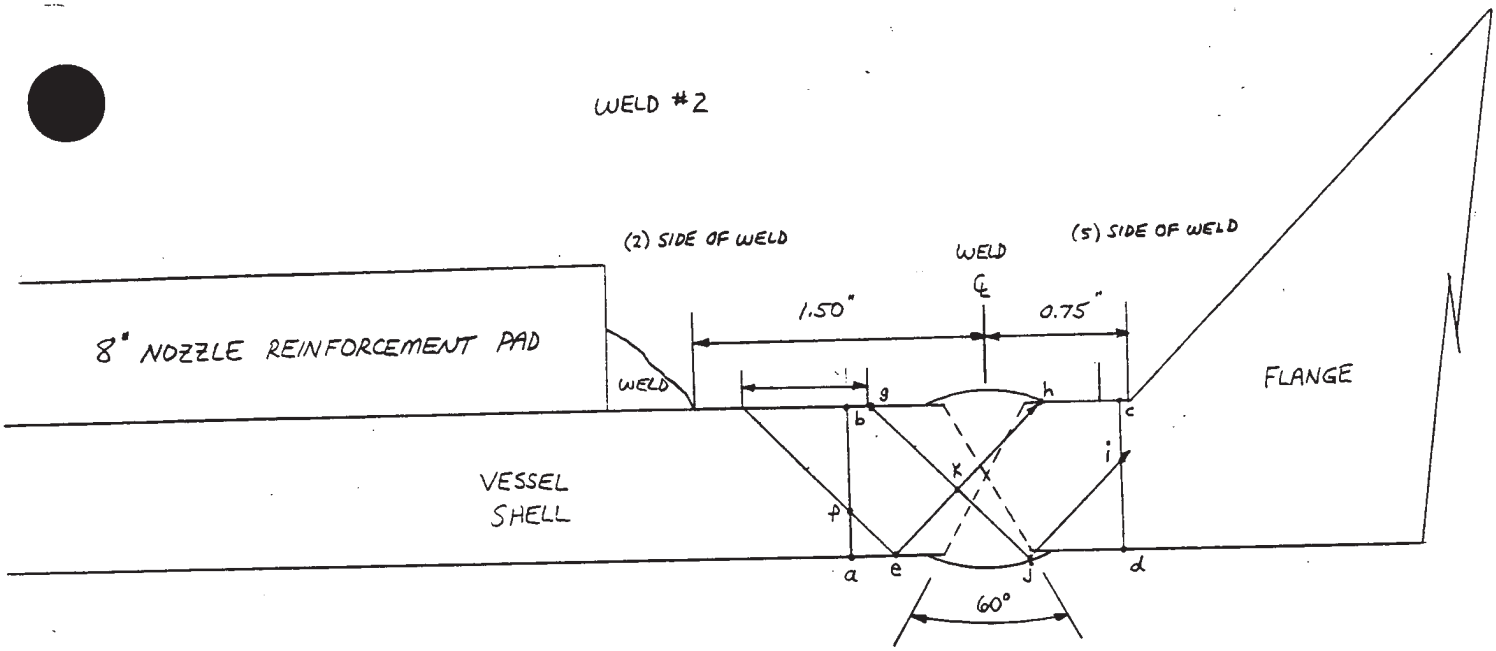

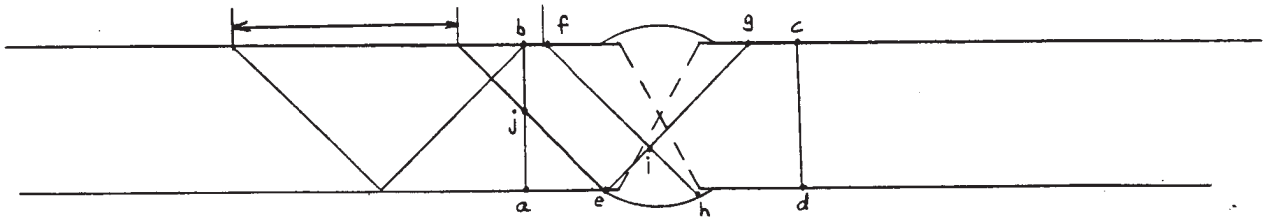

REFERENCE:

ATLAS INDUSTRIAL DRAWING # D-1466-9

WELD VOLUMETRIC COVERAGE ASSESSMENT

1990 Exams

COMPONENT DATA

r ·ram Plan Item No.: 77 Weld No.: 2 Loop/Line No.: NONREGENERATIVE LETDOWN HEAT EXCHANGER Drawing No.: 2-1140

nent Type: ☐ Piping ☑ Vessel Configuration: SHELL-TO- FLANGE WELD (S/S)

Outside Diameter: 22.0" Nominal Wall: 0.625" Circumference: 69.08"

WELD & REQUIRED VOLUME DATA

Axial Area: 1.09 Square Inches

WRV Length: 24.0 Inches (Circumferential)

WRV Volume: 26.16 Cubic Inches

EXAMINATION ACCESS

☑ Two Side Access ☐ One Side Access

☐ Unobstructed ☐ Unobstructed

☐ One Side Obstructed ☐ Obstructed

☑ Two Sides Obstructed

EXAMINATION COVERAGE

Examination Angle: 45 °

A. 1/2 Vee-Path Technique (one Beam-Direction) Central Axis Projection

Side of Weld 2
WRV Limits a-b-f-e
*Effective Length 19.5 Inches
Axial Area 0.30 Sq. In.
Effective Volume 5.85 Cu. In.

Side of Weld 5
WRV Limits L-i-c-j-k
Effective Length 24.0 Inches
Axial Area 0.18 Sq. In.
Effective Volume 4.32 Cu. In.

Total Effective Volume: 10.17 Cubic Inches
Percentage of WRV Examined Via This Technique: 38.9 %
Percentage of WRV ID Surface Region Examined: 55.7 %

B. Full Vee-Path Technique (one Beam-Direction) Central Axis Projection

Side of Weld 2
WRV Limits a-b-m-e
*Effective Length 19.5 Inches
Axial Area 0.65 Sq. In.
Effective Volume 12.68 Cu. In.

Side of Weld 5
WRV Limits L-g-h-k
Effective Length 24.0 Inches
Axial Area 0.18 Sq. In.
Effective Volume 4.32 Cu. In.

Total Effective Volume: 17.0 Cubic Inches
Percentage of WRV Examined Via This Technique: 65.0 %
Percentage of WRV ID Surface Region Examined 55.7 %

C. Full Vee-Path Technique (Two Beam-Directions) Central Axis Projection

Side of Weld 2
WRV Limits a-b-g-L
*Effective Length 19.5 Inches
Axial Area 0.50 Sq. In.
Effective Volume 9.75 Cu. In.

Side of Weld 5
WRV Limits L-o-k
Effective Length 24.0 Inches
Axial Area 0.01 Sq. In.
Effective Volume 0.24 Cu. In.

Total Effective Volume: 9.99 Cubic Inches
Percentage of WRV Examined Via This Technique 38.7 %
Percentage of WRV ID Surface Region Examined 55.7 %

ARKS

* ONE (1"OD) NOZZLE OBSTRUCTS 0.5", AND ONE (3.0"OD) NOZZLE OBSTRUCTS 4.0", FOR A TOTAL LIMITATION OF 4.5" FROM THE WELD LENGTH ON (2) SIDE OF THE WELD. (FLANGE CONFIGURATION LIMITS THE AXIAL SCAN ON (5) SIDE OF THE WELD)

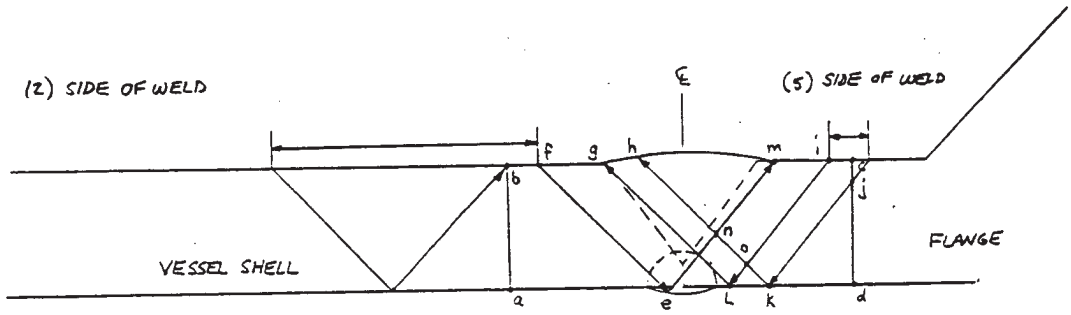

WELD #2

REFERENCE:

ATLAS INDUSTRIAL DRAWING # D-1503-5

WELD VOLUMETRIC COVERAGE ASSESSMENT

1989 Exams

COMPONENT DATA

ram Plan Item No.: 99 Weld No.: 2 Loop/Line No.: NONREGENERATIVE LETDOWN HEAT EXCHANGER Drawing No.: 2-1140

onent Type: ☐ Piping ☑ Vessel Configuration: SHELL-TO-FLANGE WELD (S/S)

Outside Diameter: 22.0" Nominal Wall: 0.625" Circumference: 69.08"

WELD & REQUIRED VOLUME DATA

Axial Area: 1.09 Square Inches

WRV Length: 24.0 Inches (Circumferential)

WRV Volume: 26.16 Cubic Inches

EXAMINATION ACCESS

☑ Two Side Access ☐ One Side Access

☐ Unobstructed ☐ Unobstructed

☐ One Side Obstructed ☐ Obstructed

☑ Two Sides Obstructed

EXAMINATION COVERAGE

Examination Angle: 45° 0

A. 1/2 Vee-Path Technique (one Beam-Direction) Central Axis Projection

Side of Weld 2	Side of Weld 5
WRV Limits a-b-f-e	WRV Limits L-I-C-J-K
* Effective Length 19.5 Inches	Effective Length 24.0 Inches
Axial Area 0.30 Sq. In.	Axial Area 0.18 Sq. In.
Effective Volume 5.85 Cu. In.	Effective Volume 4.32 Cu. In.

Total Effective Volume: 10.17 Cubic Inches
Percentage of WRV Examined Via This Technique: 38.9 %
Percentage of WRV ID Surface Region Examined: 55.7 %

B. Full Vee-Path Technique (one Beam-Direction) Central Axis Projection

Side of Weld 2	Side of Weld 5
WRV Limits a-b-m-e	WRV Limits L-g-h-K
* Effective Length 19.5 Inches	Effective Length 24.0 Inches
Axial Area 0.65 Sq. In.	Axial Area 0.18 Sq. In.
Effective Volume 12.68 Cu. In.	Effective Volume 4.32 Cu. In.

Total Effective Volume: 17.0 Cubic Inches
Percentage of WRV Examined Via This Technique: 65.0 %
Percentage of WRV ID Surface Region Examined 55.7 %

C. Full Vee-Path Technique (Two Beam-Directions) Central Axis Projection

Side of Weld 2	Side of Weld 5
WRV Limits a-b-g-L	WRV Limits L-O-K
* Effective Length 19.5 Inches	Effective Length 24.0 Inches
Axial Area 0.50 Sq. In.	Axial Area 0.01 Sq. In.
Effective Volume 9.75 Cu. In.	Effective Volume 0.24 Cu. In.

Total Effective Volume: 9.99 Cubic Inches
Percentage of WRV Examined Via This Technique 38.2 %
Percentage of WRV ID Surface Region Examined 55.7 %

ARKS

* ONE (1" OD) NOZZLE OBSTRUCTS 0.5", AND ONE (3.0" OD) NOZZLE OBSTRUCTS 4.0", FOR A TOTAL LIMITATION OF 4.5" FROM THE WELD LENGTH ON (2) SIDE OF THE WELD. (FLANGE CONFIGURATION LIMITS THE AXIAL SCAN ON (5) SIDE OF WELD)

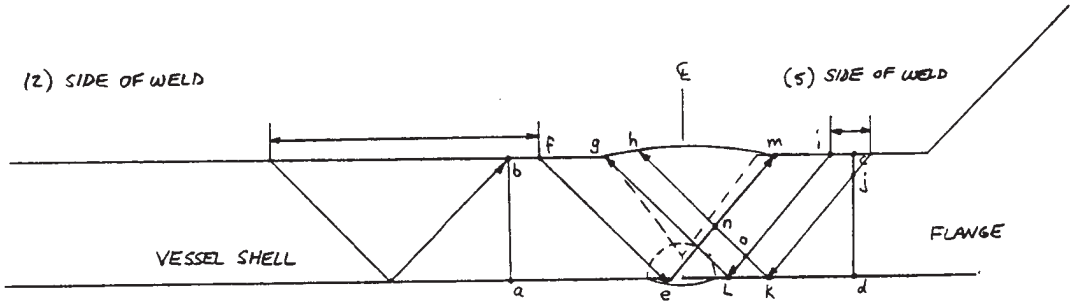

WELD #2

REFERENCE:

ATLAS INDUSTRIAL DRAWING # D-1503-5

WELD VOLUMETRIC COVERAGE ASSESSMENT

1990 Exams

COMPONENT DATA

r ram Plan Item No.: 79 Weld No.: 2 Loop/Line No.: EXCESS LETDOWN HEAT EXCHANGER Drawing No.: 2-1150

nent Type: ☐ Piping ☑ Vessel Configuration: SHELL- TO-FLANGE WELD (S/S)

Outside Diameter: 9.50" Nominal Wall: 0.75" Circumference: 29.85"

WELD & REQUIRED VOLUME DATA

Axial Area: 1.11 Square Inches

WRV Length: 10.0 Inches (Circumferential)

WRV Volume: 11.10 Cubic Inches

EXAMINATION ACCESS

☑ Two Side Access ☐ One Side Access

☐ Unobstructed ☐ Unobstructed

☐ One Side Obstructed ☐ Obstructed

☑ Two Sides Obstructed

EXAMINATION COVERAGE

Examination Angle: 45°

A. 1/2 Vee-Path Technique (one Beam-Direction) Central Axis Projection

Side of Weld 2
WRV Limits a-b-e-i
*Effective Length 8.50 Inches
Axial Area 0.37 Sq. In.
Effective Volume 3.15 Cu. In.

Side of Weld N/A
WRV Limits ____
Effective Length ____ Inches
Axial Area ____ Sq. In.
Effective Volume N/A Cu. In.

Total Effective Volume: 3.15 Cubic Inches
Percentage of WRV Examined Via This Technique: 28.4 %
Percentage of WRV ID Surface Region Examined: 50.4 %

B. Full Vee-Path Technique (one Beam-Direction) Central Axis Projection

Side of Weld 2
WRV Limits a-b-f-c-h-i
*Effective Length 8.50 Inches
Axial Area 1.00 Sq. In.
Effective Volume 8.50 Cu. In.

Side of Weld N/A
WRV Limits ____
Effective Length ____ Inches
Axial Area ____ Sq. In.
Effective Volume N/A Cu. In.

Total Effective Volume: 8.50 Cubic Inches
Percentage of WRV Examined Via This Technique: 76.6 %
Percentage of WRV ID Surface Region Examined 50.4 %

C. Full Vee-Path Technique (Two Beam-Directions) Central Axis Projection

Side of Weld 2
WRV Limits a-b-e-i
*Effective Length 8.50 Inches
Axial Area 0.37 Sq. In.
Effective Volume 3.15 Cu. In.

Side of Weld N/A
WRV Limits ____
Effective Length ____ Inches
Axial Area ____ Sq. In.
Effective Volume N/A Cu. In.

Total Effective Volume: 3.15 Cubic Inches
Percentage of WRV Examined Via This Technique 28.4 %
Percentage of WRV ID Surface Region Examined 50.4 %

ARKS

* ONE (2"OD) OUTLET NOZZLE OBSTRUCTS 1.50" OF WELD LENGTH ON (2) SIDE OF WELD.

WELD VOLUMETRIC COVERAGE ASSESSMENT

1990 Exams

COMPONENT DATA

Program Plan Item No.: 79 Weld No.: 2 Loop/Line No.: EXCESS LETDOWN HEAT EXCHANGER Drawing No.: 2-1150

Component Type: ☐ Piping ☑ Vessel Configuration: SHELL-TO-FLANGE WELD (S/S)

Outside Diameter: 9.50" Nominal Wall: 0.75" Circumference: 29.85"

WELD & REQUIRED VOLUME DATA

Axial Area: 1.11 Square Inches

WRV Length: 10.0 Inches (Circumferential)

WRV Volume: 11.16 Cubic Inches

EXAMINATION ACCESS

☑ Two Side Access ☐ One Side Access

☐ Unobstructed ☐ Unobstructed

☐ One Side Obstructed ☐ Obstructed

☑ Two Sides Obstructed

EXAMINATION COVERAGE

Examination Angle: 45°

A. 1/2 Vee-Path Technique (one Beam-Direction) Central Axis Projection

Side of Weld	N/A	Side of Weld	S
WRV Limits		WRV Limits	d-c-g-j
Effective Length	Inches	Effective Length	10.0 Inches
Axial Area	Sq. In.	Axial Area	0.39 Sq. In.
Effective Volume	N/A Cu. In.	Effective Volume	3.90 Cu. In.

Total Effective Volume: 3.90 Cubic Inches
Percentage of WRV Examined Via This Technique: 35.1 %
Percentage of WRV ID Surface Region Examined: 51.1 %

B. Full Vee-Path Technique (one Beam-Direction) Central Axis Projection

Side of Weld	N/A	Side of Weld	S
WRV Limits		WRV Limits	d-f-e-k
Effective Length	Inches	Effective Length	10.0 Inches
Axial Area	Sq. In.	Axial Area	0.74 Sq. In.
Effective Volume	N/A Cu. In.	Effective Volume	7.40 Cu. In.

Total Effective Volume: 7.40 Cubic Inches
Percentage of WRV Examined Via This Technique: 66.7 %
Percentage of WRV ID Surface Region Examined 58.0 %

C. Full Vee-Path Technique (Two Beam-Directions) Central Axis Projection

Side of Weld	N/A	Side of Weld	S
WRV Limits		WRV Limits	d-L-j
Effective Length	Inches	Effective Length	10.0 Inches
Axial Area	Sq. In.	Axial Area	0.23 Sq. In.
Effective Volume	N/A Cu. In.	Effective Volume	2.30 Cu. In.

Total Effective Volume: 2.30 Cubic Inches
Percentage of WRV Examined Via This Technique 20.7 %
Percentage of WRV ID Surface Region Examined 51.1 %

REMARKS (S) SIDE OF WELD IS LIMITED (AXIALLY) BY THE FLANGE OD CONTOUR.

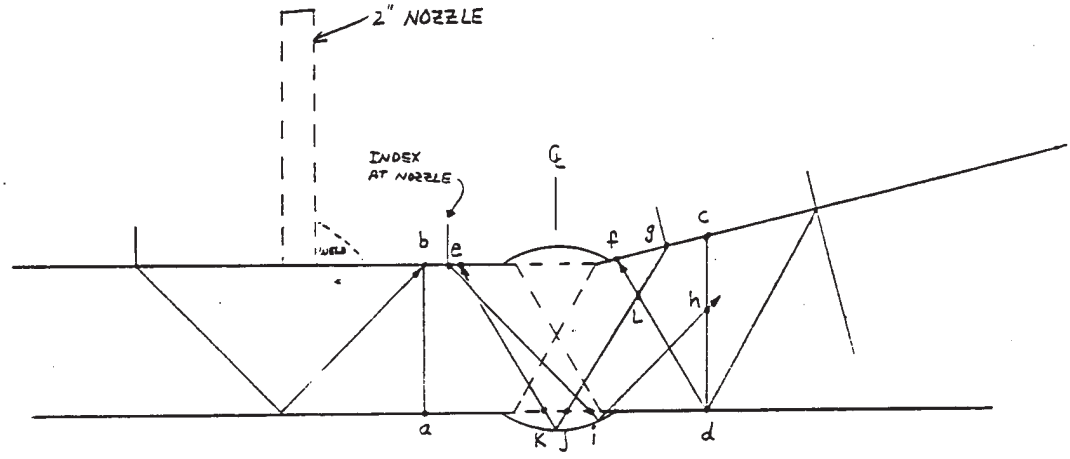

WELD #2

REFERENCE:
ATLAS INDUSTRIAL DRAWING # D-1519-5

WELD VOLUMETRIC COVERAGE ASSESSMENT

1989 Exams

COMPONENT DATA

ram Plan Item No.: 102 Weld No.: 2 Loop/Line No.: EXCESS LETDOWN HEAT EXCHANGER Drawing No.: 2-1150

onent Type: ☐ Piping ☑ Vessel Configuration: SHELL-TO-FLANGE WELD (S/S)

Outside Diameter: 9.50" Nominal Wall: 0.75" Circumference: 29.85"

WELD & REQUIRED VOLUME DATA

Axial Area: 1.11 Square Inches

WRV Length: 10.0 Inches (Circumferential)

WRV Volume: 11.10 Cubic Inches

EXAMINATION ACCESS

☑ Two Side Access ☐ One Side Access

☐ Unobstructed ☐ Unobstructed

☐ One Side Obstructed ☐ Obstructed

☑ Two Sides Obstructed

EXAMINATION COVERAGE

Examination Angle: 45 °

A. 1/2 Vee-Path Technique (one Beam-Direction) Central Axis Projection

Side of Weld 2
WRV Limits a-b-e-i
*Effective Length 8.50 Inches
Axial Area 0.37 Sq. In.
Effective Volume 3.15 Cu. In.

Side of Weld N/A
WRV Limits ____
Effective Length ____ Inches
Axial Area ____ Sq. In.
Effective Volume ____ Cu. In.

Total Effective Volume: 3.15 Cubic Inches
Percentage of WRV Examined Via This Technique: 28.4 %
Percentage of WRV ID Surface Region Examined: 50.4 %

B. Full Vee-Path Technique (one Beam-Direction) Central Axis Projection

Side of Weld 2
WRV Limits a-b-f-c-h-i
*Effective Length 8.50 Inches
Axial Area 1.00 Sq. In.
Effective Volume 8.50 Cu. In.

Side of Weld N/A
WRV Limits ____
Effective Length ____ Inches
Axial Area ____ Sq. In.
Effective Volume N/A Cu. In.

Total Effective Volume: 8.50 Cubic Inches
Percentage of WRV Examined Via This Technique: 76.6 %
Percentage of WRV ID Surface Region Examined 50.4 %

C. Full Vee-Path Technique (Two Beam-Directions) Central Axis Projection

Side of Weld 2
WRV Limits a-b-e-i
*Effective Length 8.50 Inches
Axial Area 0.37 Sq. In.
Effective Volume 3.15 Cu. In.

Side of Weld N/A
WRV Limits ____
Effective Length ____ Inches
Axial Area ____ Sq. In.
Effective Volume N/A Cu. In.

Total Effective Volume: 3.15 Cubic Inches
Percentage of WRV Examined Via This Technique 28.4 %
Percentage of WRV ID Surface Region Examined 50.4 %

ARKS

* ONE (2" OD) INLET NOZZLE OBSTRUCTS 1.50" OF WELD LENGTH ON (2) SIDE OF WELD.

WELD VOLUMETRIC COVERAGE ASSESSMENT

1989 Exams

COMPONENT DATA

gram Plan Item No.: 102 Weld No.: 2 Loop/Line No.: ~~HEAT EXCHANGER~~ EXCESS LETDOWN Drawing No.: 2-1150

onent Type: ☐ Piping ☑ Vessel Configuration: SHELL-TO-FLANGE WELD (S/S)

Outside Diameter: 9.50" Nominal Wall: 0.75" Circumference: 29.85"

WELD & REQUIRED VOLUME DATA

Axial Area: 1.11 Square Inches

WRV Length: 10.0 Inches (Circumferential)

WRV Volume: 11.10 Cubic Inches

EXAMINATION ACCESS

☑ Two Side Access ☐ One Side Access

☐ Unobstructed ☐ Unobstructed

☐ One Side Obstructed ☐ Obstructed

☑ Two Sides Obstructed

EXAMINATION COVERAGE

Examination Angle: 45 °

A. 1/2 Vee-Path Technique (one Beam-Direction) Central Axis Projection

	Side of Weld N/A	Side of Weld 5
WRV Limits		d-c-g-j
Effective Length	Inches	10.0 Inches
Axial Area	Sq. In.	0.39 Sq. In.
Effective Volume	N/A Cu. In.	3.90 Cu. In.

Total Effective Volume: 3.90 Cubic Inches
Percentage of WRV Examined Via This Technique: 35.1 %
Percentage of WRV ID Surface Region Examined: 51.1 %

B. Full Vee-Path Technique (one Beam-Direction) Central Axis Projection

	Side of Weld N/A	Side of Weld 5
WRV Limits		d-f-e-k
Effective Length	Inches	10.0 Inches
Axial Area	Sq. In.	0.74 Sq. In.
Effective Volume	N/A Cu. In.	7.40 Cu. In.

Total Effective Volume: 7.40 Cubic Inches
Percentage of WRV Examined Via This Technique: 66.7 %
Percentage of WRV ID Surface Region Examined 58.0 %

C. Full Vee-Path Technique (Two Beam-Directions) Central Axis Projection

	Side of Weld N/A	Side of Weld 5
WRV Limits		d-L-j
Effective Length	Inches	10.0 Inches
Axial Area	Sq. In.	0.23 Sq. In.
Effective Volume	N/A Cu. In.	2.30 Cu. In.

Total Effective Volume: 2.30 Cubic Inches
Percentage of WRV Examined Via This Technique 20.7 %
Percentage of WRV ID Surface Region Examined 51.1 %

ARKS (S) SIDE OF WELD IS LIMITED (AXIALLY) BY THE FLANGE OD CONTOUR.

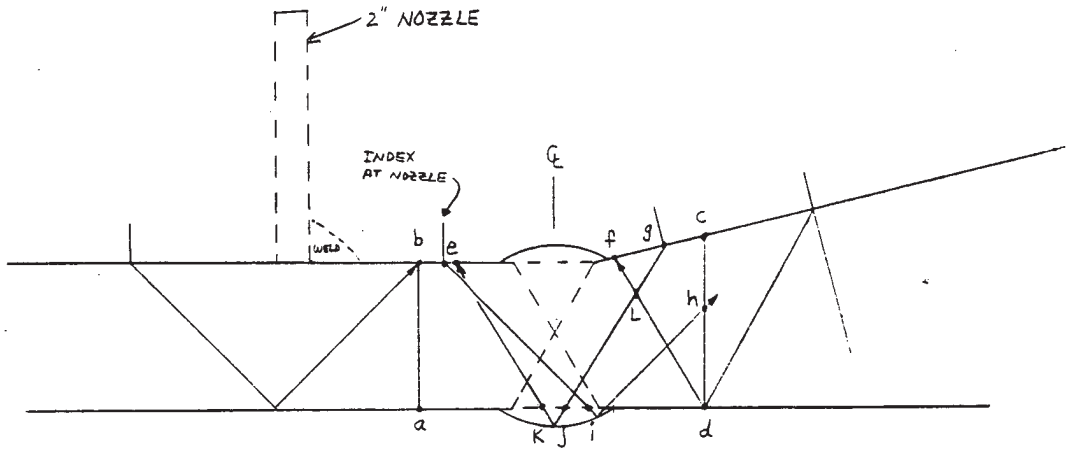

WELD #2

REFERENCE:

ATLAS INDUSTRIAL DRAWING # D-1519-5

WELD VOLUMETRIC COVERAGE ASSESSMENT

1990 Exams

COMPONENT DATA

ram Plan Item No.: 84 Weld No.: 2 Loop/Line No.: #31 SEAL WATER INJECTION FILTER Drawing No.: 2-1300

nent Type: ☐ Piping ☑ Vessel Configuration: SHELL-TO-FLANGE WELD (S/S)

Outside Diameter: 10.75" Nominal Wall: 0.875" Circumference: 33.75"

WELD & REQUIRED VOLUME DATA

Axial Area: 1.68 Square Inches

WRV Length: 12.0 Inches (Circumferential)

WRV Volume: 20.16 Cubic Inches

EXAMINATION ACCESS

☑ Two Side Access ☐ One Side Access

☐ Unobstructed ☐ Unobstructed

☑ One Side Obstructed ☐ Obstructed

☐ Two Sides Obstructed

EXAMINATION COVERAGE

Examination Angle: 45 °

A. 1/2 Vee-Path Technique (one Beam-Direction) Central Axis Projection

Side of Weld 2
WRV Limits a-b-c-d
* Effective Length 7.5 Inches
Axial Area 1.68 Sq. In.
Effective Volume 12.6 Cu. In.

Side of Weld 5
WRV Limits e-f-c-b-a
Effective Length 4.5 Inches
Axial Area 1.46 Sq. In.
** Effective Volume 6.6 Cu. In.

Total Effective Volume: 19.20 Cubic Inches
Percentage of WRV Examined Via This Technique: 95.2 %
Percentage of WRV ID Surface Region Examined: 86.9 %

B. Full Vee-Path Technique (one Beam-Direction) Central Axis Projection

Side of Weld 2
WRV Limits a-b-c-d
Effective Length 7.5 Inches
Axial Area 1.68 Sq. In.
Effective Volume 12.6 Cu. In.

Side of Weld 5
WRV Limits e-g-b-a
Effective Length 4.5 Inches
Axial Area 0.69 Sq. In.
*** Effective Volume 3.11 Cu. In.

Total Effective Volume: 15.71 Cubic Inches
Percentage of WRV Examined Via This Technique: 77.9 %
Percentage of WRV ID Surface Region Examined 86.9 %

C. Full Vee-Path Technique (Two Beam-Directions) Central Axis Projection

Side of Weld 2
WRV Limits a-b-c-d
Effective Length 7.5 Inches
Axial Area 1.68 Sq. In.
Effective Volume 1.26 Cu. In.

Side of Weld 5
WRV Limits e-g-b-a
Effective Length 4.5 Inches
Axial Area 0.69 Sq. In.
Effective Volume 3.11 Cu. In.

Total Effective Volume: 15.71 Cubic Inches
Percentage of WRV Examined Via This Technique 77.9 %
Percentage of WRV ID Surface Region Examined 86.9 %

RKS

* A WELDED ATTACHMENT OBSTRUCTS 4.5" OF WELD LENGTH FROM (2) SIDE OF WELD.
** REGION d-f-e WAS NOT EXAMINED USING TECHNIQUE "A" FROM SIDE (5) OF WELD.
*** REGION d-c-g-e WAS NOT EXAMINED USING TECHNIQUE "B" FROM SIDE (5) OF WELD.

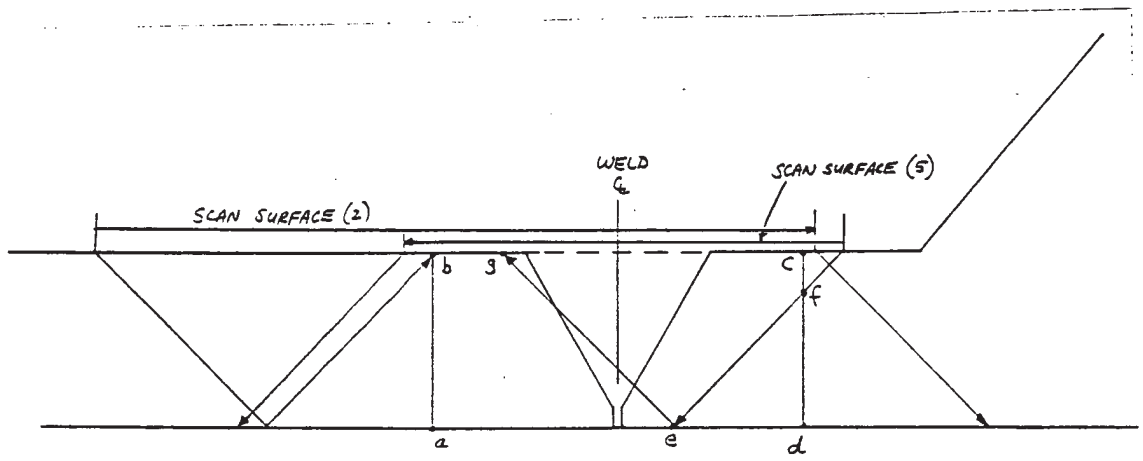

WELD #2

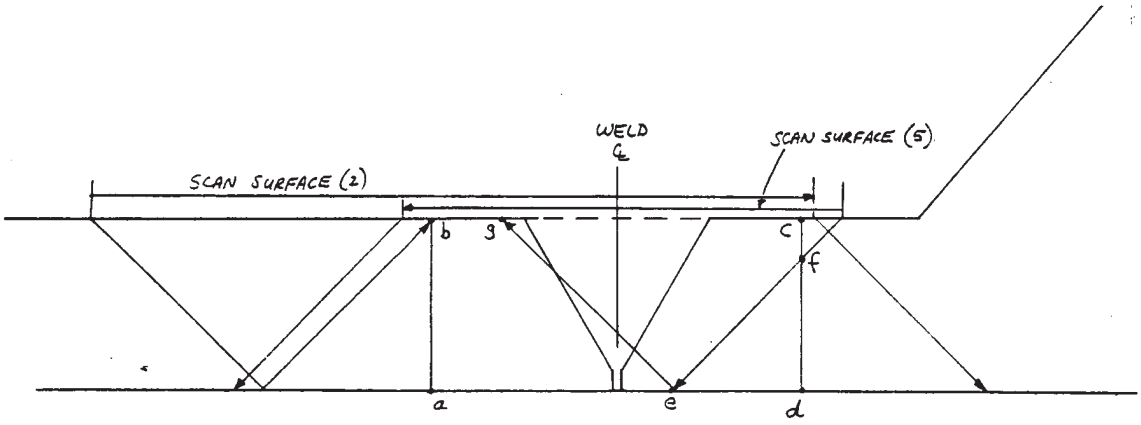

WELD #2

WELD VOLUMETRIC COVERAGE ASSESSMENT

1989 Exams

COMPONENT DATA

ram Plan Item No.: 116 Weld No.: 2 Loop/Line No.: #31 SEAL WATER INJECTION FILTER Drawing No.: 2-1300

onent Type: ☐ Piping ☑ Vessel Configuration: SHELL-TO-FLANGE WELD (S/S)

Outside Diameter: 10.75" Nominal Wall: 0.875" Circumference: 33.75"

WELD & REQUIRED VOLUME DATA

Axial Area: 1.68 Square Inches

WRV Length: 12.0 Inches (Circumferential)

WRV Volume: 20.16 Cubic Inches

EXAMINATION ACCESS

☑ Two Side Access ☐ One Side Access

☐ Unobstructed ☐ Unobstructed

☐ One Side Obstructed ☐ Obstructed

☑ Two Sides Obstructed

EXAMINATION COVERAGE

Examination Angle: 45 °

A. 1/2 Vee-Path Technique (one Beam-Direction) Central Axis Projection

Side of Weld 2	Side of Weld 5
WRV Limits a-b-c-d	WRV Limits e-f-c-b-a
*Effective Length 8.75 Inches	Effective Length 3.25 Inches
Axial Area 1.68 Sq. In.	Axial Area 1.46 Sq. In.
Effective Volume 14.70 Cu. In.	**Effective Volume 4.75 Cu. In.

Total Effective Volume: 19.45 Cubic Inches
Percentage of WRV Examined Via This Technique: 96.5 %
Percentage of WRV ID Surface Region Examined: 90.6 %

B. Full Vee-Path Technique (one Beam-Direction) Central Axis Projection

Side of Weld 2	Side of Weld 5
WRV Limits a-b-c-d	WRV Limits e-g-b-a
*Effective Length 8.75 Inches	Effective Length 3.25 Inches
Axial Area 1.68 Sq. In.	Axial Area 0.69 Sq. In.
Effective Volume 14.70 Cu. In.	***Effective Volume 2.24 Cu. In.

Total Effective Volume: 16.94 Cubic Inches
Percentage of WRV Examined Via This Technique: 84.0 %
Percentage of WRV ID Surface Region Examined 90.6 %

C. Full Vee-Path Technique (Two Beam-Directions) Central Axis Projection

Side of Weld 2	Side of Weld 5
WRV Limits a-b-c-d	WRV Limits e-g-b-a
*Effective Length 8.75 Inches	Effective Length 3.25 Inches
Axial Area 1.68 Sq. In.	Axial Area 0.69 Sq. In.
Effective Volume 14.70 Cu. In.	Effective Volume 2.24 Cu. In.

Total Effective Volume: 16.94 Cubic Inches
Percentage of WRV Examined Via This Technique 84.0 %
Percentage of WRV ID Surface Region Examined 90.6 %

ARKS

* A (3.2" WIDE) WELDED IDENTIFICATION PLATE OBSTRUCTS 3.25" OF WELD LENGTH.
** REGION d-f-e WAS NOT EXAMINED VIA TECHNIQUE "A" FROM SIDE (5) OF WELD
*** REGION d-c-g-e WAS NOT EXAMINED USING TECHNIQUE 'B' FROM SIDE (5) OF WELD

WELD VOLUMETRIC COVERAGE ASSESSMENT

1990 Exams

COMPONENT DATA

Program Plan Item No.: 86 Weld No.: 2 Loop/Line No.: REACTOR COOLANT FILTER Drawing No.: 2-1310

Component Type: ☐ Piping ☑ Vessel Configuration: SHELL-TO-FLANGE WELD (S/S)

Outside Diameter: 14.0" Nominal Wall: 0.25" Circumference: 43.96"

WELD & REQUIRED VOLUME DATA

Axial Area: 0.313 Square Inches

WRV Length: 15.0 Inches (Circumferential)

WRV Volume: 4.70 Cubic Inches

EXAMINATION ACCESS

☐ Two Side Access ☑ One Side Access

☐ Unobstructed ☐ Unobstructed

☐ One Side Obstructed ☑ Obstructed

☐ Two Sides Obstructed

EXAMINATION COVERAGE

Examination Angle: 45°

A. 1/2 Vee-Path Technique (one Beam-Direction) Central Axis Projection

Side of Weld 2	Side of Weld N/A
WRV Limits a-b-f-L	WRV Limits _____
Effective Length 11.25 Inches	Effective Length ___ Inches
Axial Area 0.206 Sq. In.	Axial Area _____ Sq. In.
Effective Volume 2.32 Cu. In.	Effective Volume N/A Cu. In.

Total Effective Volume: 2.32 Cubic Inches
Percentage of WRV Examined Via This Technique: 49.4 %
Percentage of WRV ID Surface Region Examined: 76.0 %

B. Full Vee-Path Technique (Two Beam-Directions) Beam-Width Prpjection

Side of Weld 2	Side of Weld N/A
WRV Limits a-b-g-K	WRV Limits _____
Effective Length 11.25 Inches	Effective Length ___ Inches
Axial Area 0.256 Sq. In.	Axial Area _____ Sq. In.
Effective Volume 2.88 Cu. In.	Effective Volume N/A Cu. In.

Total Effective Volume: 2.88 Cubic Inches
Percentage of WRV Examined Via This Technique: 61.3 %
Percentage of WRV ID Surface Region Examined 92.0 %

C. Full Vee-Path Technique (Two Beam-Directions) Central Axis Projection

Side of Weld 2	Side of Weld N/A
WRV Limits a-b-f-L	WRV Limits _____
Effective Length 11.25 Inches	Effective Length ___ Inches
Axial Area 0.206 Sq. In.	Axial Area _____ Sq. In.
Effective Volume 2.32 Cu. In.	Effective Volume N/A Cu. In.

Total Effective Volume: 2.32 Cubic Inches
Percentage of WRV Examined Via This Technique 49.4 %
Percentage of WRV ID Surface Region Examined 76.0 %

REMARKS

* ONE (3.75" WIDE) WELDED ATTACHMENT OBSTRUCTS THE (2) SIDE OF THE WELD.

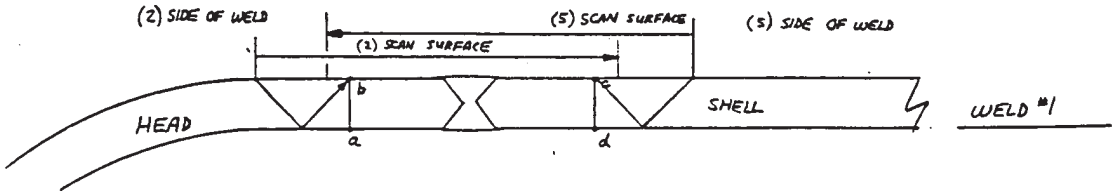
(2) SIDE OF WELD
(5) SCAN SURFACE
(5) SIDE OF WELD
(2) SCAN SURFACE
HEAD
SHELL
WELD #1
a
b
c
d

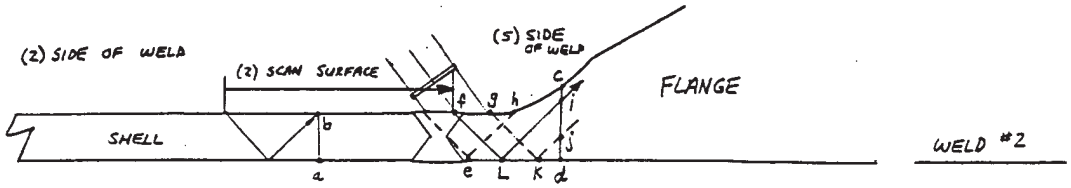
(2) SIDE OF WELD
(2) SCAN SURFACE
(5) SIDE OF WELD
FLANGE
SHELL
WELD #2
a
b
c
d
e
f
g
h
i
j
K
L

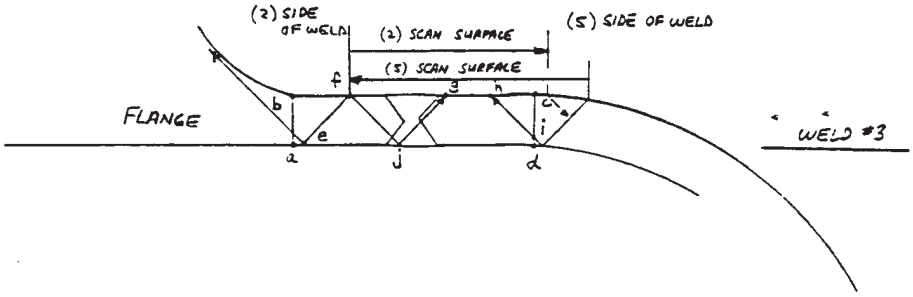
(2) SIDE OF WELD
(2) SCAN SURFACE
(5) SIDE OF WELD
(5) SCAN SURFACE
FLANGE
WELD #3
a
b
c
d
e
f
g
h
i
j

WELD VOLUMETRIC COVERAGE ASSESSMENT

1989 Exams

COMPONENT DATA

Program Plan Item No.: 120 Weld No.: 2 Loop/Line No.: REACTOR COOLANT FILTER Drawing No.: 2-1310

Component Type: ☐ Piping ☑ Vessel Configuration: SHELL-TO-FLANGE WELD (S/S)

Outside Diameter: 14.0" Nominal Wall: 0.25" Circumference: 43.96"

WELD & REQUIRED VOLUME DATA

Axial Area: 0.313 Square Inches

WRV Length: 15.0 Inches (Circumferential)

WRV Volume: 4.70 Cubic Inches

EXAMINATION ACCESS

☐ Two Side Access ☑ One Side Access

☐ Unobstructed ☐ Unobstructed

☐ One Side Obstructed ☑ Obstructed

☐ Two Sides Obstructed

EXAMINATION COVERAGE

Examination Angle: 45 °

A. 1/2 Vee-Path Technique (one Beam-Direction) Central Axis Projection

Side of Weld 2	Side of Weld N/A
WRV Limits a-b-f-L	WRV Limits _____
Effective Length 15.0 Inches	Effective Length ___ Inches
Axial Area 0.206 Sq. In.	Axial Area _____ Sq. In.
Effective Volume 3.09 Cu. In.	Effective Volume N/A Cu. In.

Total Effective Volume: 3.09 Cubic Inches
Percentage of WRV Examined Via This Technique: 65.7 %
Percentage of WRV ID Surface Region Examined: 76.0 %

B. Full Vee-Path Technique (Two Beam-Directions) Beam-Width Prpjection

Side of Weld 2	Side of Weld N/A
WRV Limits a-b-g-K	WRV Limits _____
Effective Length 15.0 Inches	Effective Length ___ Inches
Axial Area 0.256 Sq. In.	Axial Area _____ Sq. In.
Effective Volume 3.84 Cu. In.	Effective Volume N/A Cu. In.

Total Effective Volume: 3.84 Cubic Inches
Percentage of WRV Examined Via This Technique: 81.7 %
Percentage of WRV ID Surface Region Examined 92.0 %

C. Full Vee-Path Technique (Two Beam-Directions) Central Axis Projection

Side of Weld 2	Side of Weld N/A
WRV Limits a-b-f-L	WRV Limits _____
Effective Length 15.0 Inches	Effective Length ___ Inches
Axial Area 0.206 Sq. In.	Axial Area _____ Sq. In.
Effective Volume 3.09 Cu. In.	Effective Volume N/A Cu. In.

Total Effective Volume: 3.09 Cubic Inches
Percentage of WRV Examined Via This Technique 65.7 %
Percentage of WRV ID Surface Region Examined 76.0 %

REMARKS FLANGE SURFACE DOES NOT PERMIT SCANNING FROM (S) SIDE OF WELD.

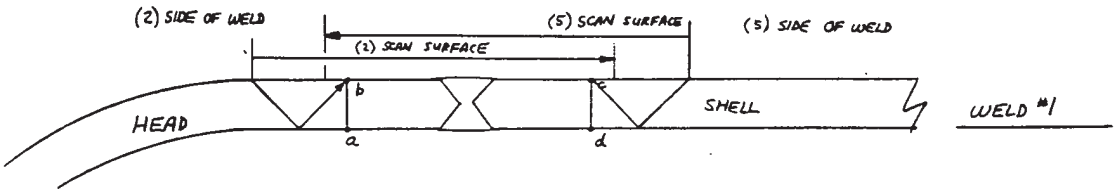
(2) SIDE OF WELD
(5) SCAN SURFACE
(5) SIDE OF WELD
(2) SCAN SURFACE
HEAD
SHELL
WELD #1
a
b
d

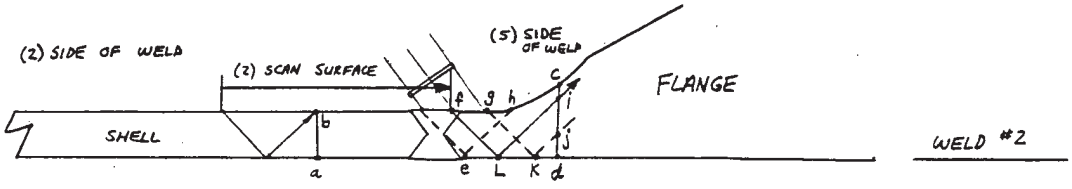
(2) SIDE OF WELD
(5) SIDE OF WELD
(2) SCAN SURFACE
FLANGE
SHELL
WELD #2
a
b
c
d
e
f
g
h
i
j
K
L

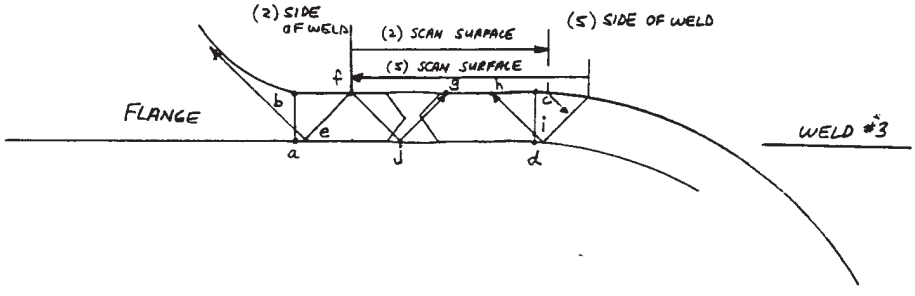
(2) SIDE OF WELD
(2) SCAN SURFACE
(5) SIDE OF WELD
(5) SCAN SURFACE
FLANGE
WELD #3
a
b
c
d
e
f
g
h
i
J

ATTACHMENT 5

WELD VOLUMETRIC COVERAGE ASSESSMENT

1989 Exams

COMPONENT DATA

gram Plan Item No.: 90 Weld No.: 314 Loop/Line No.: #31 RESIDUAL HEAT EXCHANGER Drawing No.: 2-1120

ponent Type: ☐ Piping ☑ Vessel Configuration: HEAD-TO-SHELL WELD (S/S)

Outside Diameter: 34.5" Nominal Wall: 0.75" Circumference: 108.3"

WELD & REQUIRED VOLUME DATA

Axial Area: 1.07 Square Inches

WRV Length: 37.0 Inches (Circumferential)

WRV Volume: 39.59 Cubic Inches

EXAMINATION ACCESS

☑ Two Side Access ☐ One Side Access

☐ Unobstructed ☐ Unobstructed

☐ One Side Obstructed ☐ Obstructed

☑ Two Sides Obstructed

EXAMINATION COVERAGE

Examination Angle: 45 °

A. 1/2 Vee-Path Technique (one Beam-Direction) Central Axis Projection

	* Side of Weld 2	Side of Weld N/A
WRV Limits	a-b-g-k	
Effective Length	37.0 Inches	Inches
Axial Area	0.39 Sq. In.	Sq. In.
Effective Volume	14.43 Cu. In.	N/A Cu. In.

Total Effective Volume: 14.43 Cubic Inches
Percentage of WRV Examined Via This Technique: 36.4 %
Percentage of WRV ID Surface Region Examined: 63.4 %

B. Full Vee-Path Technique (one Beam-Direction) Central Axis Projection

	* Side of Weld 2	Side of Weld N/A
WRV Limits	a-h-c-j-k	
Effective Length	37.0 Inches	Inches
Axial Area	0.95 Sq. In.	Sq. In.
Effective Volume	35.15 Cu. In.	N/A Cu. In.

Total Effective Volume: 35.15 Cubic Inches
Percentage of WRV Examined Via This Technique: 88.8 %
Percentage of WRV ID Surface Region Examined 63.4 %

C. Full Vee-Path Technique (Two Beam-Directions) Central Axis Projection

	* Side of Weld 2	Side of Weld N/A
WRV Limits	a-n-k	
Effective Length	37.0 Inches	Inches
Axial Area	0.20 Sq. In.	Sq. In.
Effective Volume	7.40 Cu. In.	N/A Cu. In.

Total Effective Volume: 7.40 Cubic Inches
Percentage of WRV Examined Via This Technique 18.7 %
Percentage of WRV ID Surface Region Examined 63.4 %

MARKS

* THE CURVATURE OF THE VESSEL HEAD LIMITS SCANNING SURFACE (2) FOR THE COMPLETE 37.0 INCH LENGTH OF WELD EXAMINED.

WELD VOLUMETRIC COVERAGE ASSESSMENT

1989 Exams

COMPONENT DATA

gram Plan Item No.: 90 Weld No.: 31-1 Loop/Line No.: #31 RESIDUAL HEAT EXCHANGER Drawing No.: 2-1120

ponent Type: ☐ Piping ☑ Vessel Configuration: HEAD-TO-SHELL WELD (S/S)

Outside Diameter: 34.5 Nominal Wall: 0.75" Circumference: 108.3"

WELD & REQUIRED VOLUME DATA

Axial Area: 1.07 Square Inches

WRV Length: 37.0 Inches (Circumferential)

WRV Volume: 39.59 Cubic Inches

EXAMINATION ACCESS

☑ Two Side Access ☐ One Side Access

☐ Unobstructed ☐ Unobstructed

☐ One Side Obstructed ☐ Obstructed

☑ Two Sides Obstructed

EXAMINATION COVERAGE

Examination Angle: 45 °

A. 1/2 Vee-Path Technique (one Beam-Direction) Central Axis Projection

*	**
Side of Weld 5	Side of Weld 5
WRV Limits j-c-i-m-L	WRV Limits d-c-g-e
Effective Length 27.0 Inches	Effective Length 10.0 Inches
Axial Area 0.36 Sq. In.	Axial Area 0.37 Sq. In.
Effective Volume 9.72 Cu. In.	Effective Volume 3.70 Cu. In.

Total Effective Volume: 13.42 Cubic Inches
Percentage of WRV Examined Via This Technique: 33.9 %
Percentage of WRV ID Surface Region Examined: 26.4 %

B. Full Vee-Path Technique (one Beam-Direction) Central Axis Projection

*	**
Side of Weld 5	Side of Weld 5
WRV Limits e-b-f-L-m	WRV Limits d-c-f-j
Effective Length 27.0 Inches	Effective Length 10.0 Inches
Axial Area 0.32 Sq. In.	Axial Area 0.60 Sq. In.
Effective Volume 8.64 Cu. In.	Effective Volume 6.0 Cu. In.

Total Effective Volume: 14.64 Cubic Inches
Percentage of WRV Examined Via This Technique: 37.0 %
Percentage of WRV ID Surface Region Examined 26.4 %

C. Full Vee-Path Technique (Two Beam-Directions) Central Axis Projection

*	**
Side of Weld 5	Side of Weld 5
WRV Limits m-o-L	WRV Limits d-c-g-i-j
Effective Length 27.0 Inches	Effective Length 10.0 Inches
Axial Area 0.03 Sq. In.	Axial Area 0.32 Sq. In.
Effective Volume 0.81 Cu. In.	Effective Volume 3.20 Cu. In.

Total Effective Volume: 4.01 Cubic Inches
Percentage of WRV Examined Via This Technique 10.1 %
Percentage of WRV ID Surface Region Examined 26.4 %

MARKS

* WELDED SUPPORT # 31-2WS OBSTRUCTS 27.0" OF THE 37.0" LENGTH OF WELD EXAMINED. THIS COLUMN OF FIGURES DEALS WITH THIS OBSTRUCTED WELD LENGTH.

** WELD LENGTH OF 10.0" IS NOT OBSTRUCTED BY SUPPORT #31-2WS.

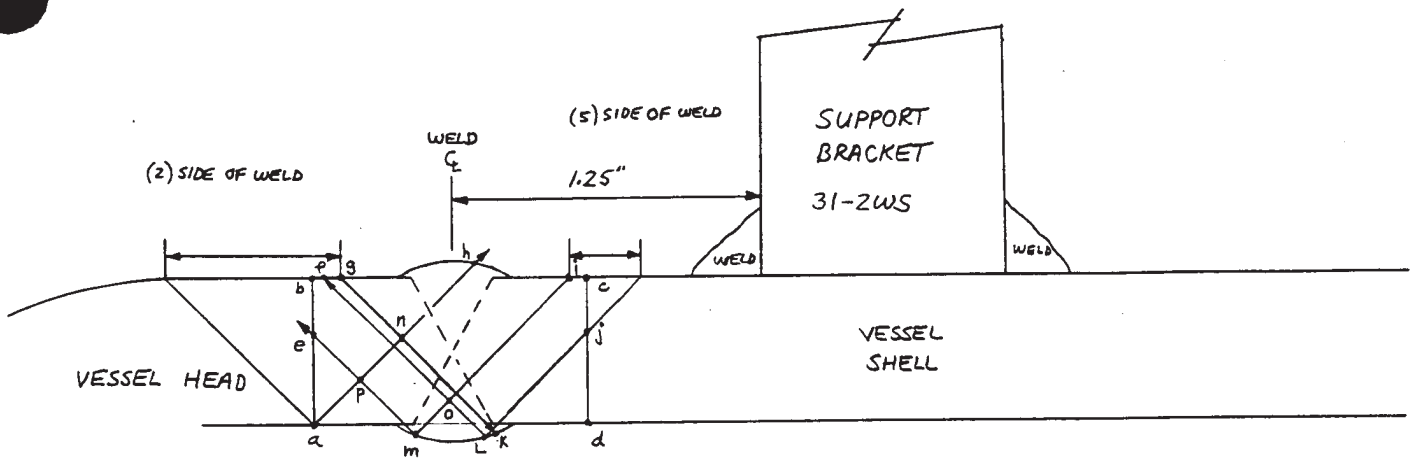

WELD #1

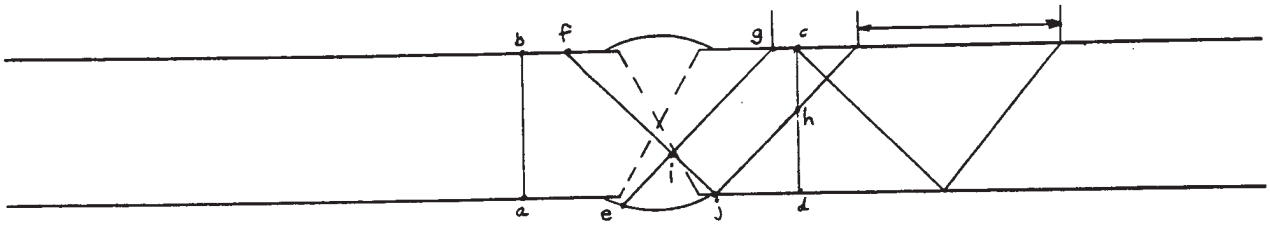

REFERENCE:

ATLAS INDUSTRIAL DRAWING # D-1466-9

WELD VOLUMETRIC COVERAGE ASSESSMENT

1990 Exams

COMPONENT DATA

Program Plan Item No.: 78 Weld No.: 1 Loop/Line No.: NONREGENERATIVE LETDOWN HEAT EXCHANGER Drawing No.: 2-1140

Component Type: ☐ Piping ☑ Vessel Configuration: HEAD-TO-SHELL WELD (S/S)

Outside Diameter: 22.0" Nominal Wall: 0.625" Circumference: 69.08"

WELD & REQUIRED VOLUME DATA

Axial Area: 1.09 Square Inches

WRV Length: 24.0 Inches (Circumferential)

WRV Volume: 26.16 Cubic Inches

EXAMINATION ACCESS

☑ Two Side Access ☐ One Side Access

☐ Unobstructed ☐ Unobstructed

☐ One Side Obstructed ☐ Obstructed

☑ Two Sides Obstructed

EXAMINATION COVERAGE

Examination Angle: 45 °

A. 1/2 Vee-Path Technique (one Beam-Direction) Central Axis Projection

Side of Weld 2
WRV Limits a-b-f-o
Effective Length 24.0 Inches
Axial Area 0.26 Sq. In.
Effective Volume 6.24 Cu. In.

Side of Weld 5
WRV Limits d-c-k-l
*Effective Length 19.5 Inches
Axial Area 0.26 Sq. In.
Effective Volume 5.07 Cu. In.

Total Effective Volume: 11.31 Cubic Inches
Percentage of WRV Examined Via This Technique: 43.2 %
Percentage of WRV ID Surface Region Examined: 80.0 %

B. Full Vee-Path Technique (one Beam-Direction) Central Axis Projection

Side of Weld 2
WRV Limits a-e-g-i-o
Effective Length 24.0 Inches
Axial Area 0.60 Sq. In.
Effective Volume 25.20 Cu. In.

Side of Weld 5
WRV Limits d-c-h-l
*Effective Length 19.5 Inches
Axial Area 0.63 Sq. In.
Effective Volume 12.29 Cu. In.

**Total Effective Volume: 25.20 Cubic Inches
Percentage of WRV Examined Via This Technique: 96.3 %
Percentage of WRV ID Surface Region Examined 100 %

C. Full Vee-Path Technique (Two Beam-Directions) Central Axis Projection

Side of Weld 2
WRV Limits a-b-g-m / h-i-p
Effective Length 24.0 Inches
Axial Area 0.40 / 0.21 Sq. In.
Effective Volume 14.64 Cu. In.

Side of Weld 5
WRV Limits d-c-j-n
*Effective Length 19.5 Inches
Axial Area 0.4 Sq. In.
Effective Volume 7.8 Cu. In.

Total Effective Volume: 22.44 Cubic Inches
Percentage of WRV Examined Via This Technique 85.8 %
Percentage of WRV ID Surface Region Examined 100 %

REMARKS

* (5) SIDE OF WELD IS OBSTRUCTED BY ONE (1.0" OD) NOZZLE FOR A LENGTH OF 0.5 INCH, AND BY A (3.0" OD) NOZZLE FOR A LENGTH OF 4.0". TOTAL OBSTRUCTION = 4.5"

** REGION e-b-g IS NOT EXAMINED USING TECHNIQUE "B" FROM THE (2) SIDE OF WELD.

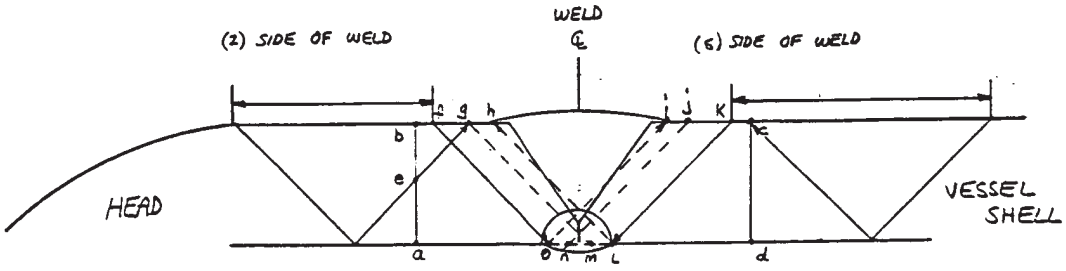

WELD #1

REFERENCE:

ATLAS INDUSTRIAL DRAWING # D-1503-5

WELD VOLUMETRIC COVERAGE ASSESSMENT

1989 Exams

COMPONENT DATA

ram Plan Item No.: 100 Weld No.: 1 Loop/Line No.: NONREGENERATIVE LETDOWN HEAT EXCHANGER Drawing No.: 2-1140

onent Type: ☐ Piping ☑ Vessel Configuration: HEAD-TO-SHELL WELD (S/S)

Outside Diameter: 22.0" Nominal Wall: 0.625" Circumference: 69.08"

WELD & REQUIRED VOLUME DATA

Axial Area: 1.09 Square Inches

WRV Length: 24.0 Inches (Circumferential)

WRV Volume: 26.16 Cubic Inches

EXAMINATION ACCESS

☑ Two Side Access ☐ One Side Access

☐ Unobstructed ☐ Unobstructed

☐ One Side Obstructed ☐ Obstructed

☑ Two Sides Obstructed

EXAMINATION COVERAGE

Examination Angle: 45 °

A. 1/2 Vee-Path Technique (one Beam-Direction) Central Axis Projection

Side of Weld 2	Side of Weld 5
WRV Limits a-b-f-o	WRV Limits d-c-k-L
Effective Length 24.0 Inches	*Effective Length 19.5 Inches
Axial Area 0.26 Sq. In.	Axial Area 0.26 Sq. In.
Effective Volume 6.24 Cu. In.	Effective Volume 5.07 Cu. In.

Total Effective Volume: 11.31 Cubic Inches
Percentage of WRV Examined Via This Technique: 43.2 %
Percentage of WRV ID Surface Region Examined: 80.0 %

B. Full Vee-Path Technique (one Beam-Direction) Central Axis Projection

Side of Weld 2	Side of Weld 5
WRV Limits a-e-g-i-o	WRV Limits d-c-h-L
Effective Length 24.0 Inches	*Effective Length 19.5 Inches
Axial Area 0.60 Sq. In.	Axial Area 0.63 Sq. In.
Effective Volume 14.4 Cu. In.	Effective Volume 12.29 Cu. In.

**Total Effective Volume: 25.20 Cubic Inches
Percentage of WRV Examined Via This Technique: 96.3 %
Percentage of WRV ID Surface Region Examined 100 %

C. Full Vee-Path Technique (Two Beam-Directions) Central Axis Projection

Side of Weld 2	Side of Weld 5
WRV Limits a-b-q-m / h-i-p	WRV Limits d-c-j-n
Effective Length 24.0 Inches	*Effective Length 19.5 Inches
Axial Area 0.40 / 0.21 Sq. In.	Axial Area 0.4 Sq. In.
Effective Volume 14.64 Cu. In.	Effective Volume 7.8 Cu. In.

Total Effective Volume: 22.44 Cubic Inches
Percentage of WRV Examined Via This Technique 85.8 %
Percentage of WRV ID Surface Region Examined 100 %

ARKS

* (5) SIDE OF WELD #1 IS OBSTRUCTED BY A (1.0" OD) NOZZLE FOR A LENGTH OF 0.5 INCH, AND BY a (NOMINAL 3" OD) NOZZLE FOR A LENGTH OF 4.0", TOTAL WELD LENGTH OBSTRUCTION IS 4.5 INCHES.

** WRV REGION e-b-g IS NOT EXAMINED USING TECHNIQUE 'B' FROM THE WELD (2) SIDE.

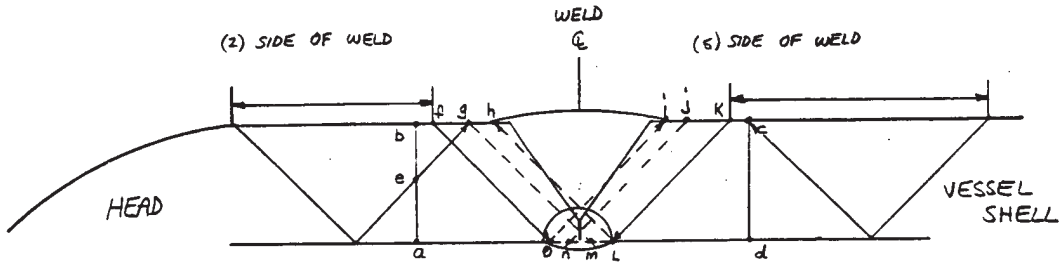

WELD #1

REFERENCE:

ATLAS INDUSTRIAL DRAWING # D-1503-5

WELD VOLUMETRIC COVERAGE ASSESSMENT

1990 Exams

COMPONENT DATA

Program Plan Item No.: 80 Weld No.: 1 Loop/Line No.: EXCESS LETDOWN HEAT EXCHANGER Drawing No.: 2-1150

Component Type: ☐ Piping ☑ Vessel Configuration: HEAD-TO-SHELL WELD (S/S)

Outside Diameter: 9.50" Nominal Wall: 0.75" Circumference: 29.85"

WELD & REQUIRED VOLUME DATA

Axial Area: .411 Square Inches

WRV Length: 10.0 Inches (Circumferential)

WRV Volume: 11.10 Cubic Inches

EXAMINATION ACCESS

☑ Two Side Access ☐ One Side Access

☐ Unobstructed ☐ Unobstructed

☐ One Side Obstructed ☐ Obstructed

* ☑ Two Sides Obstructed

EXAMINATION COVERAGE

Examination Angle: 45°

A. 1/2 Vee-Path Technique (one Beam-Direction) Central Axis Projection

Side of Weld	2	Side of Weld	N/A
WRV Limits	a-b-f-L	WRV Limits	
Effective Length	10.0 Inches	Effective Length	Inches
Axial Area	0.36 Sq. In.	Axial Area	Sq. In.
Effective Volume	3.60 Cu. In.	Effective Volume	N/A Cu. In.

Total Effective Volume: 3.60 Cubic Inches
Percentage of WRV Examined Via This Technique: 32.4 %
Percentage of WRV ID Surface Region Examined: 60.0 %

B. Full Vee-Path Technique (one Beam-Direction) Central Axis Projection

Side of Weld	2	Side of Weld	N/A
WRV Limits	a-g-c-i-m	WRV Limits	
Effective Length	10.0 Inches	Effective Length	Inches
Axial Area	0.67 Sq. In.	Axial Area	Sq. In.
Effective Volume	6.70 Cu. In.	Effective Volume	N/A Cu. In.

Total Effective Volume: 6.70 Cubic Inches
Percentage of WRV Examined Via This Technique: 60.4 %
Percentage of WRV ID Surface Region Examined 66.9 %

C. Full Vee-Path Technique (Two Beam-Directions) Central Axis Projection

Side of Weld	2	Side of Weld	N/A
WRV Limits	a-o-L	WRV Limits	
Effective Length	10.0 Inches	Effective Length	Inches
Axial Area	0.20 Sq. In.	Axial Area	Sq. In.
Effective Volume	2.00 Cu. In.	Effective Volume	N/A Cu. In.

Total Effective Volume: 2.00 Cubic Inches
Percentage of WRV Examined Via This Technique 18.0 %
Percentage of WRV ID Surface Region Examined 60.0 %

REMARKS

* CURVATURE OF VESSEL HEAD LIMITS THE EXAM FROM (2) SIDE OF WELD

WELD VOLUMETRIC COVERAGE ASSESSMENT

1990 Exams

COMPONENT DATA

Program Plan Item No.: 80 Weld No.: 1 Loop/Line No.: EXCESS LETDOWN HEAT EXCHANGER Drawing No.: 2-1150

Component Type: ☐ Piping ☑ Vessel Configuration: HEAD-TO-SHELL WELD (S/S)

Outside Diameter: 9.50" Nominal Wall: 0.75" Circumference: 29.85"

WELD & REQUIRED VOLUME DATA

Axial Area: 1.11 Square Inches

WRV Length: 10.0 Inches (Circumferential)

WRV Volume: 11.10 Cubic Inches

EXAMINATION ACCESS

☑ Two Side Access ☐ One Side Access

☐ Unobstructed ☐ Unobstructed

☐ One Side Obstructed ☐ Obstructed

☑ Two Sides Obstructed

EXAMINATION COVERAGE

Examination Angle: 45°

A. 1/2 Vee-Path Technique (one Beam-Direction) Central Axis Projection

Side of Weld N/A	Side of Weld 5
WRV Limits ____	WRV Limits d-c-h-k
Effective Length ____ Inches	*Effective Length 8.5 Inches
Axial Area ____ Sq. In.	Axial Area 0.36 Sq. In.
Effective Volume N/A Cu. In.	Effective Volume 3.06 Cu. In.

Total Effective Volume: 3.06 Cubic Inches
Percentage of WRV Examined Via This Technique: 27.6 %
Percentage of WRV ID Surface Region Examined: 60.0 %

B. Full Vee-Path Technique (one Beam-Direction) Central Axis Projection

Side of Weld N/A	Side of Weld 5
WRV Limits ____	WRV Limits d-c-b-e-j
Effective Length ____ Inches	*Effective Length 8.5 Inches
Axial Area ____ Sq. In.	Axial Area 0.67 Sq. In.
Effective Volume N/A Cu. In.	Effective Volume 5.70 Cu. In.

Total Effective Volume: 5.70 Cubic Inches
Percentage of WRV Examined Via This Technique: 51.4 %
Percentage of WRV ID Surface Region Examined 66.9 %

C. Full Vee-Path Technique (Two Beam-Directions) Central Axis Projection

Side of Weld N/A	Side of Weld 5
WRV Limits ____	WRV Limits d-c-h-k
Effective Length ____ Inches	*Effective Length 8.5 Inches
Axial Area ____ Sq. In.	Axial Area 0.36 Sq. In.
Effective Volume N/A Cu. In.	Effective Volume 3.06 Cu. In.

Total Effective Volume: 3.06 Cubic Inches
Percentage of WRV Examined Via This Technique 27.6 %
Percentage of WRV ID Surface Region Examined 60.0 %

REMARKS

*ONE (2"OD) OUTLET NOZZLE OBSTRUCTS 1.5" FROM THE (S) SIDE WELD LENGTH

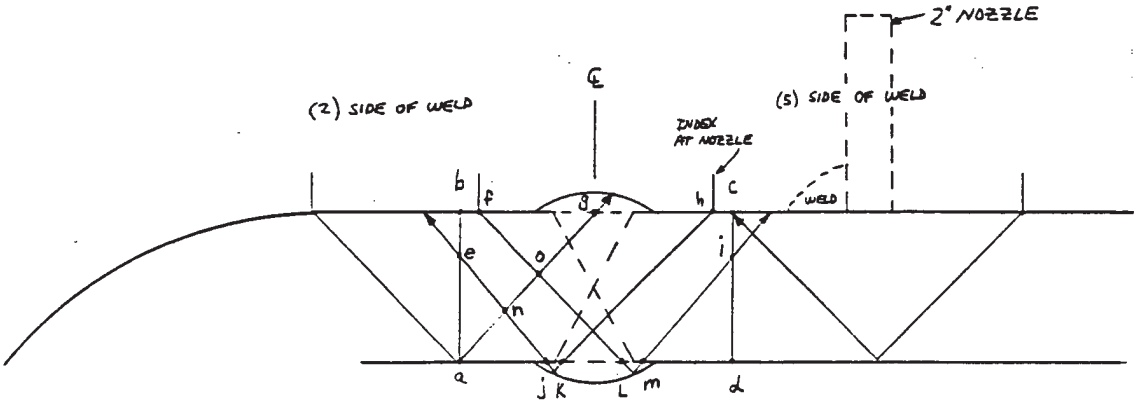

WELD #1

REFERENCE:

ATLAS INDUSTRIAL DRAWING # D-1519-5

WELD VOLUMETRIC COVERAGE ASSESSMENT

1989 Exams

COMPONENT DATA

Program Plan Item No.: 103 Weld No.: 1 Loop/Line No.: EXCESS LETDOWN HEAT EXCHANGER Drawing No.: 2-1150

Component Type: ☐ Piping ☑ Vessel Configuration: HEAD-TO-SHELL WELD (S/S)

Outside Diameter: 9.50" Nominal Wall: 0.75" Circumference: 29.85

WELD & REQUIRED VOLUME DATA

Axial Area: 1.11 Square Inches

WRV Length: 10.0 Inches (Circumferential)

WRV Volume: 11.10 Cubic Inches

EXAMINATION ACCESS

☑ Two Side Access ☐ One Side Access

☐ Unobstructed ☐ Unobstructed

☐ One Side Obstructed ☐ Obstructed

* ☑ Two Sides Obstructed

EXAMINATION COVERAGE

Examination Angle: 45 °

A. 1/2 Vee-Path Technique (one Beam-Direction) Central Axis Projection

	Side of Weld 2	Side of Weld N/A
WRV Limits	a-b-f-L	
Effective Length	10.0 Inches	Inches
Axial Area	0.36 Sq. In.	Sq. In.
Effective Volume	3.60 Cu. In.	N/A Cu. In.

Total Effective Volume: 3.60 Cubic Inches
Percentage of WRV Examined Via This Technique: 32.4 %
Percentage of WRV ID Surface Region Examined: 60.0 %

B. Full Vee-Path Technique (one Beam-Direction) Central Axis Projection

	Side of Weld 2	Side of Weld N/A
WRV Limits	a-g-c-i-m	
Effective Length	10.0 Inches	Inches
Axial Area	0.67 Sq. In.	Sq. In.
Effective Volume	6.70 Cu. In.	N/A Cu. In.

Total Effective Volume: 6.70 Cubic Inches
Percentage of WRV Examined Via This Technique: 60.4 %
Percentage of WRV ID Surface Region Examined 66.9 %

C. Full Vee-Path Technique (Two Beam-Directions) Central Axis Projection

	Side of Weld 2	Side of Weld N/A
WRV Limits	a-o-L	
Effective Length	10.0 Inches	Inches
Axial Area	0.20 Sq. In.	Sq. In.
Effective Volume	2.00 Cu. In.	N/A Cu. In.

Total Effective Volume: 2.00 Cubic Inches
Percentage of WRV Examined Via This Technique 18.0 %
Percentage of WRV ID Surface Region Examined 60.0 %

REMARKS

* CURVATURE OF VESSEL HEAD LIMITS THE EXAM FROM (2) SIDE OF WELD

WELD VOLUMETRIC COVERAGE ASSESSMENT

1989 Exams

COMPONENT DATA

ram Plan Item No.: 103 Weld No.: 1 Loop/Line No.: EXCESS LETDOWN HEAT EXCHANGER Drawing No.: 2-1150

onent Type: ☐ Piping ☑ Vessel Configuration: HEAD-TO-SHELL WELD

Outside Diameter: 9.50" Nominal Wall: 0.75" Circumference: 29.85"

WELD & REQUIRED VOLUME DATA

Axial Area: 1.11 Square Inches

WRV Length: 10.0 Inches (Circumferential)

WRV Volume: 11.10 Cubic Inches

EXAMINATION ACCESS

☑ Two Side Access ☐ One Side Access

☐ Unobstructed ☐ Unobstructed

☐ One Side Obstructed ☐ Obstructed

☑ Two Sides Obstructed

EXAMINATION COVERAGE

Examination Angle: 45°

A. 1/2 Vee-Path Technique (one Beam-Direction) Central Axis Projection

Side of Weld N/A	Side of Weld 5
WRV Limits ____	WRV Limits d-c-h-k
Effective Length ____ Inches	*Effective Length 8.5 Inches
Axial Area ____ Sq. In.	Axial Area 0.36 Sq. In.
Effective Volume N/A Cu. In.	Effective Volume 3.06 Cu. In.

Total Effective Volume: 3.06 Cubic Inches
Percentage of WRV Examined Via This Technique: 27.6 %
Percentage of WRV ID Surface Region Examined: 60.0 %

B. Full Vee-Path Technique (one Beam-Direction) Central Axis Projection

Side of Weld N/A	Side of Weld 5
WRV Limits ____	WRV Limits d-c-b-e-j
Effective Length ____ Inches	*Effective Length 8.5 Inches
Axial Area ____ Sq. In.	Axial Area 0.67 Sq. In.
Effective Volume N/A Cu. In.	Effective Volume 5.70 Cu. In.

Total Effective Volume: 5.70 Cubic Inches
Percentage of WRV Examined Via This Technique: 51.4 %
Percentage of WRV ID Surface Region Examined 66.9 %

C. Full Vee-Path Technique (Two Beam-Directions) Central Axis Projection

Side of Weld N/A	Side of Weld 5
WRV Limits ____	WRV Limits d-c-h-k
Effective Length ____ Inches	*Effective Length 8.5 Inches
Axial Area ____ Sq. In.	Axial Area 0.36 Sq. In.
Effective Volume N/A Cu. In.	Effective Volume 3.06 Cu. In.

Total Effective Volume: 3.06 Cubic Inches
Percentage of WRV Examined Via This Technique 27.6 %
Percentage of WRV ID Surface Region Examined 60.0 %

ARKS

* ONE (2." OD) INLET NOZZLE OBSTRUCTS 1.50" FROM THE (5) SIDE WELD LENGTH.

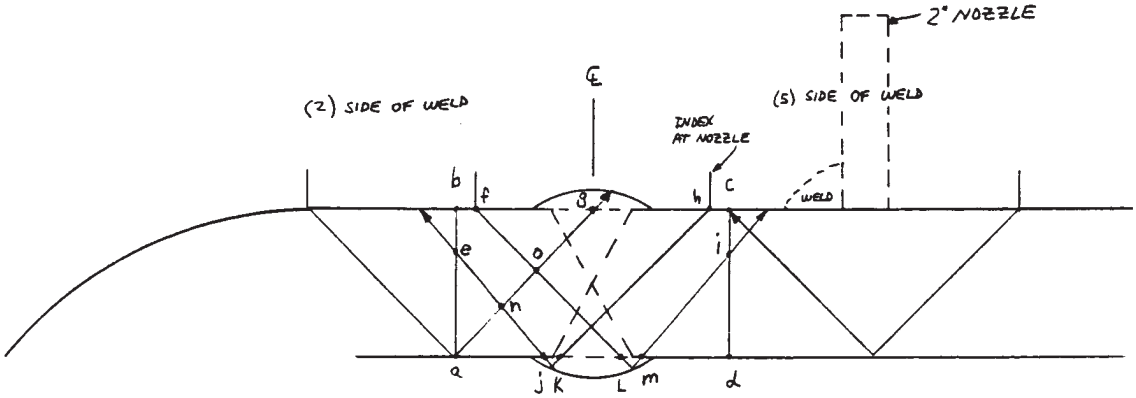

WELD # 1

REFERENCE:

ATLAS INDUSTRIAL DRAWING # D-1519-5

WELD VOLUME.R.O COVERAGE ASSESSMENT

1990 Exams

COMPONENT DATA

Program Plan Item No.: 81 Weld No.: 1 Loop/Line No.: VOLUME CONTROL TANK Drawing No.: 2-1200

Component Type: ☐ Piping ☑ Vessel Configuration: BOTTOM-HEAD-TO-SHELL WELD (S/S)

Outside Diameter: 90.50" Nominal Wall: 0.25" Circumference: 284.17"

WELD & REQUIRED VOLUME DATA

Axial Area: 0.313 Square Inches

WRV Length: 100.0 Inches (Circumferential)

WRV Volume: 31.3 Cubic Inches

EXAMINATION ACCESS

☑ Two Side Access ☐ One Side Access

☐ Unobstructed ☐ Unobstructed

☐ One Side Obstructed ☐ Obstructed

☑ Two Sides Obstructed

EXAMINATION COVERAGE

Examination Angle: 45 °

A. 1/2 Vee-Path Technique (one Beam-Direction) Central Axis Projection

Side of Weld 2
WRV Limits a-b-f-e
*Effective Length 88.0 Inches
Axial Area 0.06 Sq. In.
Effective Volume 5.28 Cu. In.

Side of Weld 5
WRV Limits d-c-h-i
**Effective Length 75.0 Inches
Axial Area 0.06 Sq. In.
Effective Volume 4.50 Cu. In.

Total Effective Volume: 9.78 Cubic Inches
Percentage of WRV Examined Via This Technique: 31.2 %
Percentage of WRV ID Surface Region Examined: 45.6 %

B. Full Vee-Path Technique (Two Beam-Directions) Beam-Width Prpjection

Side of Weld 2
WRV Limits a-b-h-k
*Effective Length 88.0 Inches
Axial Area 0.184 Sq. In.
Effective Volume 16.19 Cu. In.

Side of Weld 5
WRV Limits d-c-f-k
**Effective Length 75.0 Inches
Axial Area 0.184 Sq. In.
Effective Volume 13.80 Cu. In.

Total Effective Volume: 30.0 Cubic Inches
Percentage of WRV Examined Via This Technique: 95.8 %
Percentage of WRV ID Surface Region Examined 81.5 %

C. Full Vee-Path Technique (Two Beam-Directions) Central Axis Projection

Side of Weld 2
WRV Limits a-b-g-e
*Effective Length 88.0 Inches
Axial Area 0.123 Sq. In.
Effective Volume 10.82 Cu. In.

Side of Weld 5
WRV Limits d-c-g-i
**Effective Length 75.0 Inches
Axial Area 0.123 Sq. In.
Effective Volume 9.23 Cu. In.

Total Effective Volume: 20.1 Cubic Inches
Percentage of WRV Examined Via This Technique 64.2 %
Percentage of WRV ID Surface Region Examined 45.6 %

REMARKS

* TWO WELDED SUPPORTS (6.0" EACH IN WIDTH) OBSTRUCT 12.0" OF WELD LENGTH ON (2) SIDE
** TWO WELDED SUPPORTS (12.5" EACH IN WIDTH) OBSTRUCT 25.0" OF WELD LENGTH ON (5) SIDE

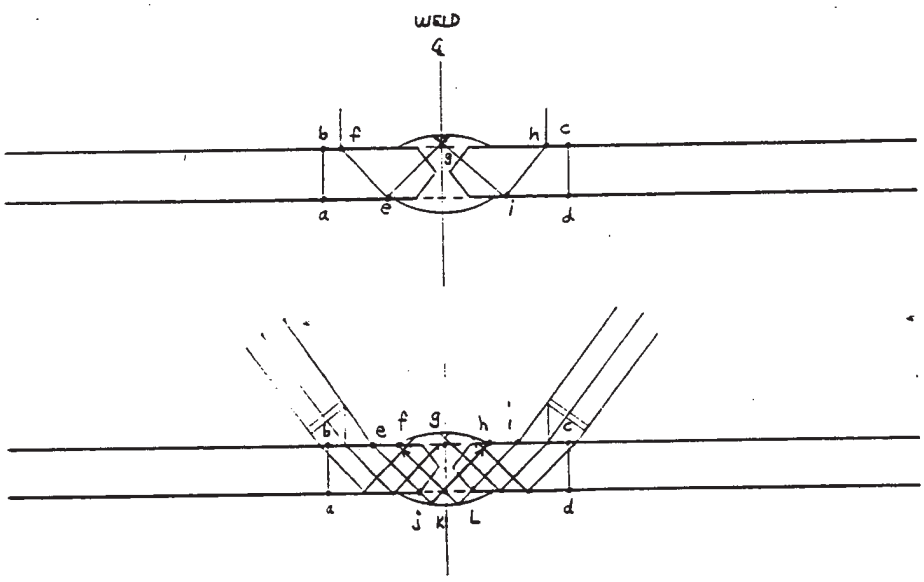

REFERENCE:

WESTINGHOUSE DRAWING # 684J950

WELD VOLUMETRIC COVERAGE ASSESSMENT

1989 Exams

COMPONENT DATA

Program Plan Item No.: 105 Weld No.: 1 Loop/Line No.: VOLUME CONTROL TANK Drawing No.: 2-1200

Component Type: ☐ Piping ☑ Vessel Configuration: BOTTOM HEAD-TO-SHELL WELD (S/S)

Outside Diameter: 90.50" Nominal Wall: 0.25" Circumference: 284.17"

WELD & REQUIRED VOLUME DATA

Axial Area: 0.313 Square Inches

WRV Length: 100.0 Inches (Circumferential)

WRV Volume: 31.30 Cubic Inches

EXAMINATION ACCESS

☑ Two Side Access ☐ One Side Access

☐ Unobstructed ☐ Unobstructed

☐ One Side Obstructed ☐ Obstructed

☑ Two Sides Obstructed

EXAMINATION COVERAGE

Examination Angle: 45 °

A. 1/2 Vee-Path Technique (one Beam-Direction) Central Axis Projection

Side of Weld 2
WRV Limits a-b-f-e
*Effective Length 94.0 Inches
Axial Area 0.06 Sq. In.
Effective Volume 5.64 Cu. In.

Side of Weld 5
WRV Limits d-c-h-i
**Effective Length 80.6 Inches
Axial Area 0.06 Sq. In.
Effective Volume 4.84 Cu. In.

Total Effective Volume: 10.48 Cubic Inches
Percentage of WRV Examined Via This Technique: 33.5 %
Percentage of WRV ID Surface Region Examined: 46.1 %

B. Full Vee-Path Technique (Two Beam-Directions) Beam-Width Prpjection

Side of Weld 2
WRV Limits a-b-h-K
*Effective Length 94.0 Inches
Axial Area 0.184 Sq. In.
Effective Volume 17.30 Cu. In.

Side of Weld 5
WRV Limits d-c-f-K
**Effective Length 80.6 Inches
Axial Area 0.184 Sq. In.
Effective Volume 14.72 Cu. In.

Total Effective Volume: 31.30 Cubic Inches
Percentage of WRV Examined Via This Technique: 87.3 %
Percentage of WRV ID Surface Region Examined 87.3 %

C. Full Vee-Path Technique (Two Beam-Directions) Central Axis Projection

Side of Weld 2
WRV Limits a-b-g-e
*Effective Length 94.0 Inches
Axial Area 0.123 Sq. In.
Effective Volume 11.56 Cu. In.

Side of Weld 5
WRV Limits d-c-g-i
**Effective Length 80.6 Inches
Axial Area 0.123 Sq. In.
Effective Volume 9.91 Cu. In.

Total Effective Volume: 21.47 Cubic Inches
Percentage of WRV Examined Via This Technique 68.6 %
Percentage of WRV ID Surface Region Examined 41.6 %

REMARKS

* WELDED SUPPORT OBSTRUCTS 6.0" OF WELD LENGTH ON (2) SIDE OF WELD)

** WELDED SUPPORT OBSTRUCTS 12.5", AND (2"OD) NOZZLE OBSTRUCTS 2.90" OF WELD LENGTH FROM (5) SIDE OF WELD. TOTAL OBSTRUCTION = 19.4."

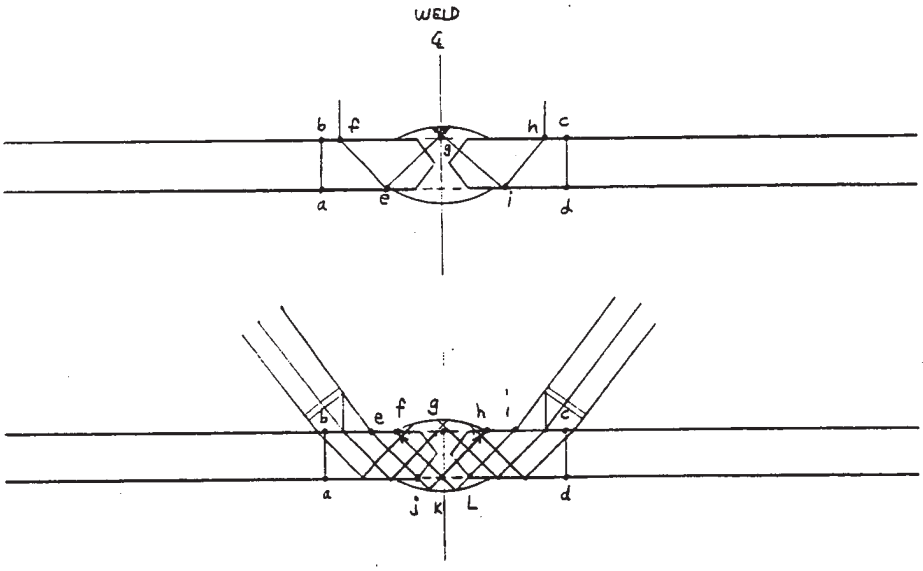

REFERENCE:

WESTINGHOUSE DRAWING # 6845950

WELD VOLUMETRIC COVERAGE ASSESSMENT

1990 Exams

COMPONENT DATA

Program Plan Item No.: 83 Weld No.: 1 Loop/Line No.: ACCUMULATOR TANK -32 Drawing No.: 2-1210

Component Type: ☐ Piping ☑ Vessel Configuration: HEAD-TO-SHELL WELD (C/S WITH S/S CLAD)

Outside Diameter: 120.0" Nominal Wall: 2.40" Circumference: 376.8"

WELD & REQUIRED VOLUME DATA

Axial Area: 5.76 Square Inches

WRV Length: 126.0 Inches (Circumferential)

WRV Volume: 714.4 Cubic Inches

EXAMINATION ACCESS

☑ Two Side Access ☐ One Side Access

☑ Unobstructed ☐ Unobstructed

☐ One Side Obstructed ☐ Obstructed

☐ Two Sides Obstructed

EXAMINATION COVERAGE

Examination Angle: 45 °

A. 1/2 Vee-Path Technique (one Beam-Direction) Central Axis Projection

Side of Weld 2	Side of Weld N/A
WRV Limits a-f-i	WRV Limits ____
Effective Length 126.0 Inches	Effective Length ____ Inches
Axial Area 1.48 Sq. In.	Axial Area ____ Sq. In.
Effective Volume 186.5 Cu. In.	Effective Volume N/A Cu. In.

Total Effective Volume: 186.5 Cubic Inches
Percentage of WRV Examined Via This Technique: 26.1 %
Percentage of WRV ID Surface Region Examined: 57.4 %

B. 1/2 Vee-Path Technique (one Beam-Direction) Central Axis Projection

Side of Weld N/A	Side of Weld 5
WRV Limits ____	WRV Limits d-g-e
Effective Length ____ Inches	Effective Length 126.0 Inches
Axial Area ____ Sq. In.	Axial Area 1.48 Sq. In.
Effective Volume N/A Cu. In.	Effective Volume 186.5 Cu. In.

Total Effective Volume: 186.5 Cubic Inches
Percentage of WRV Examined Via This Technique: 26.1 %
Percentage of WRV ID Surface Region Examined 57.4 %

C. 1/2 Vee-Path Technique (Two Beam-Directions) Central Axis Projection

Side of Weld 2/5	Side of Weld N/A
WRV Limits e-h-i	WRV Limits ____
Effective Length 126.0 Inches	Effective Length ____ Inches
Axial Area 0.18 Sq. In.	Axial Area ____ Sq. In.
Effective Volume 19.53 Cu. In.	Effective Volume N/A Cu. In.

Total Effective Volume: 19.53 Cubic Inches
Percentage of WRV Examined Via This Technique 2.7 %
Percentage of WRV ID Surface Region Examined 30.0 %

REMARKS

WELD VOLUMETRIC COVERAGE ASSESSMENT

1990 Exams

COMPONENT DATA

Program Plan Item No.: 83 Weld No.: 1 Loop/Line No.: ACCUMULATOR TANK -32 Drawing No.: 2-1210

Component Type: ☐ Piping ☑ Vessel Configuration: HEAD-TO-SHELL WELD (C/S WITH S/S CLAD)

Outside Diameter: 120.0" Nominal Wall: 2.40" Circumference: 376.8"

WELD & REQUIRED VOLUME DATA

Axial Area: 5.76 Square Inches

WRV Length: 126.0 Inches (Circumferential)

WRV Volume: 714.4 Cubic Inches

EXAMINATION ACCESS

☑ Two Side Access ☐ One Side Access

☐ Unobstructed ☐ Unobstructed

* ☑ One Side Obstructed ☐ Obstructed

☐ Two Sides Obstructed

EXAMINATION COVERAGE

Examination Angle: 60 °

A. 1/2 Vee-Path Technique (one Beam-Direction) Central Axis Projection

Side of Weld 2	Side of Weld N/A
WRV Limits a-g-j-d	WRV Limits _____
Effective Length 126.0 Inches	Effective Length ___ Inches
Axial Area 3.07 Sq. In.	Axial Area _____ Sq. In.
Effective Volume 386.8 Cu. In.	Effective Volume N/A Cu. In.

Total Effective Volume: 386.8 Cubic Inches
Percentage of WRV Examined Via This Technique: 54.1 %
Percentage of WRV ID Surface Region Examined: 100 %

B. 1/2 Vee-Path Technique (one Beam-Direction) Central Axis Projection

Side of Weld N/A	Side of Weld 5
WRV Limits _____	WRV Limits i-h-f-a-e
Effective Length ___ Inches	Effective Length 126.0 Inches
Axial Area _____ Sq. In.	Axial Area 2.30 Sq. In.
Effective Volume N/A Cu. In.	Effective Volume 289.8 Cu. In.

Total Effective Volume: 289.8 Cubic Inches
Percentage of WRV Examined Via This Technique: 40.6 %
Percentage of WRV ID Surface Region Examined 56.7 %

C. 1/2 Vee-Path Technique (Two Beam-Directions) Central Axis Projection

Side of Weld 2/5	Side of Weld N/A
WRV Limits a-f-k-c-e	WRV Limits _____
Effective Length 126.0 Inches	Effective Length ___ Inches
Axial Area 1.69 Sq. In.	Axial Area _____ Sq. In.
Effective Volume 212.9 Cu. In.	Effective Volume N/A Cu. In.

Total Effective Volume: 212.9 Cubic Inches
Percentage of WRV Examined Via This Technique 29.8 %
Percentage of WRV ID Surface Region Examined 56.7 %

REMARKS

* HEAD CURVATURE LIMITS EXAM ON (5) SIDE OF WELD (FOR COMPLETE LENGTH)

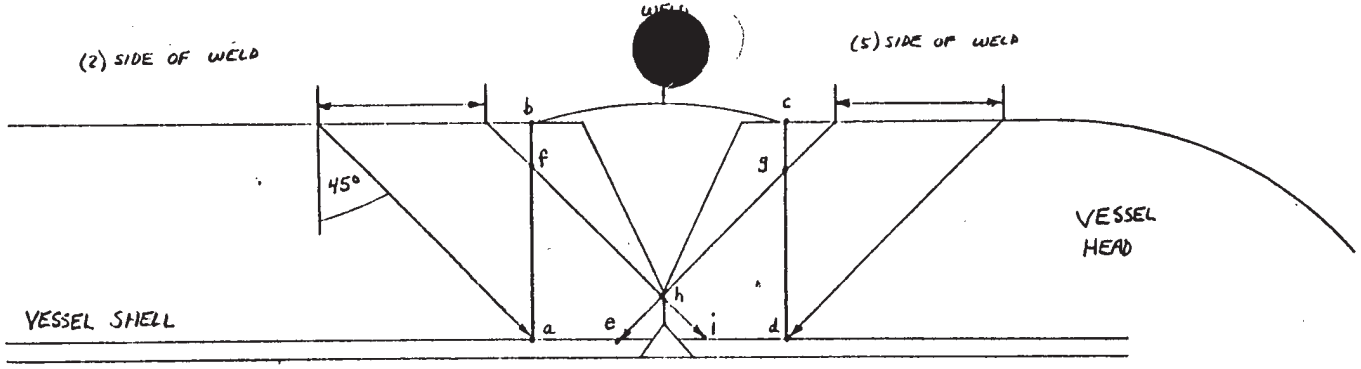

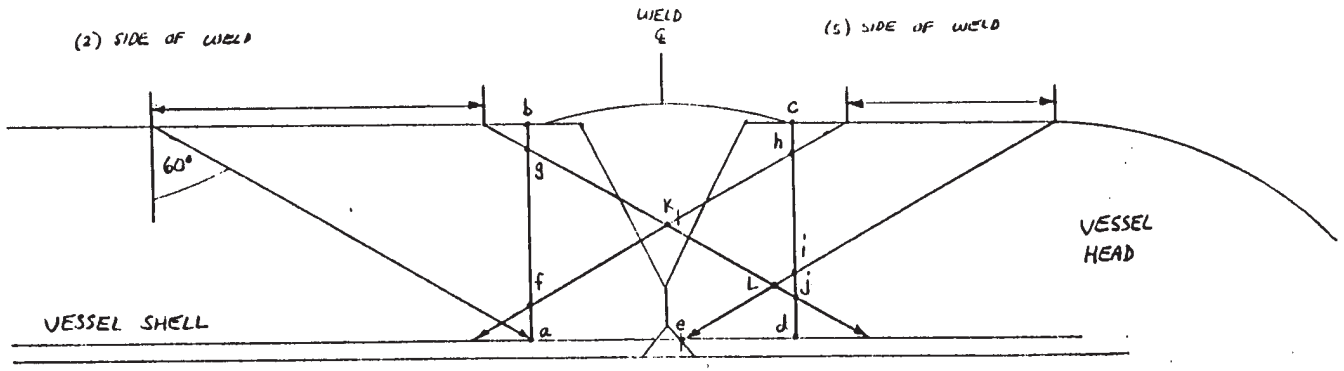

SCALE : 0.5" = 1.0"

REFERENCE :

DELTA SOUTHERN DRAWING # L 11047

WELD VOLUMETRIC COVERAGE ASSESSMENT

1989 Exams

COMPONENT DATA

gram Plan Item No.: 109 Weld No.: 1 Loop/Line No.: ACCUMULATOR TANK -32 Drawing No.: 2-1210

onent Type: ☐ Piping ☑ Vessel Configuration: HEAD-TO-SHELL WELD (C/S WITH S/S CLAD)

Outside Diameter: 120.0" Nominal Wall: 2.40" Circumference: 376.8"

WELD & REQUIRED VOLUME DATA

Axial Area: 5.76 Square Inches

WRV Length: 126.0 Inches (Circumferential)

WRV Volume: 714.4 Cubic Inches

EXAMINATION ACCESS

☑ Two Side Access ☐ One Side Access

☐ Unobstructed ☐ Unobstructed

☐ One Side Obstructed ☐ Obstructed

☑ Two Sides Obstructed

EXAMINATION COVERAGE

Examination Angle 45 °

A. 1/2 Vee-Path Technique (One Beam-Directions) Central Axis Projection

Side of Weld 2	Side of Weld N/A
WRV Limits a-f-1	WRV Limits _____
*Effective Length 108.5 Inches	Effective Length ___ Inches
Axial Area 1.48 Sq. In.	Axial Area _____ Sq. In.
Effective Volume 160.6 Cu. In.	Effective Volume N/A Cu. In.

Total Effective Volume: 160.6 Cubic Inches
Percentage of WRV Examined Via This Technique: 22.4 %
Percentage of WRV ID Surface Region Examined: 57.4 %

B. 1/2 Vee-Path Technique (one Beam-Directions) Central Axis Projection

Side of Weld N/A	Side of Weld 5
WRV Limits _____	WRV Limits d-g-e
Effective Length ___ Inches	**Effective Length 111.0 Inches
Axial Area _____ Sq. In.	Axial Area 1.48 Sq. In.
Effective Volume N/A Cu. In.	Effective Volume 164.3 Cu. In.

Total Effective Volume: 164.3 Cubic Inches
Percentage of WRV Examined Via This Technique: 23.0 %
Percentage of WRV ID Surface Region Examined: 58.1 %

C. 1/2 Vee-Path Technique (Two Beam-Directions) Central Axis Projection

Side of Weld 2/5	Side of Weld N/A
WRV Limits e-h-1	WRV Limits _____
Effective Length 108.5 Inches	Effective Length ___ Inches
Axial Area 0.18 Sq. In.	Axial Area _____ Sq. In.
Effective Volume 19.53 Cu. In.	Effective Volume N/A Cu. In.

Total Effective Volume: 19.53 Cubic Inches
Percentage of WRV Examined Via This Technique 2.7 %
Percentage of WRV ID Surface Region Examined 30.0 %

ARKS

* SIDE (2) OF WELD IS OBSTRUCTED BY LONGITUDINAL WELD GLS (2.46") AND BY A WELDED LIFTING LUG (15.0") FOR A TOTAL LIMITATION OF 17.50"

** SIDE (5) OF WELD IS LIMITED ONLY BY A WELDED LIFTING LUG (15.0")

WELD VOLUMETRIC COVERAGE ASSESSMENT

1989 Exams

COMPONENT DATA

ram Plan Item No.: 109 Weld No.: 1 Loop/Line No.: ACCUMULATOR TANK-32 Drawing No.: 2-1210

onent Type: ☐ Piping ☑ Vessel Configuration: HEAD-TO-SHELL WELD (C/S WITH S/S CLAD)

Outside Diameter: 120.0" Nominal Wall: 2.40" Circumference: 376.8'

WELD & REQUIRED VOLUME DATA

Axial Area: 5.76 Square Inches

WRV Length: 126.0 Inches (Circumferential)

WRV Volume: 714.4 Cubic Inches

EXAMINATION ACCESS

☑ Two Side Access	☐ One Side Access
☐ Unobstructed	☐ Unobstructed
☐ One Side Obstructed	☐ Obstructed
☑ Two Sides Obstructed	

EXAMINATION COVERAGE

Examination Angle 60 °

A. 1/2 Vee-Path Technique (One Beam-Directions) Central Axis Projection

Side of Weld 2	Side of Weld N/A
WRV Limits a-g-j-d	WRV Limits
Effective Length 108.5 Inches	Effective Length ___ Inches
Axial Area 3.07 Sq. In.	Axial Area ___ Sq. In.
Effective Volume 333.1 Cu. In.	Effective Volume N/A Cu. In.

Total Effective Volume: 333.1 Cubic Inches
Percentage of WRV Examined Via This Technique: 46.6 %
Percentage of WRV ID Surface Region Examined: 86.1 %

B. 1/2 Vee-Path Technique (one Beam-Directions) Central Axis Projection

Side of Weld N/A	Side of Weld 5
WRV Limits	WRV Limits l-h-f-a-e
Effective Length ___ Inches	Effective Length 111.0 Inches
Axial Area ___ Sq. In.	Axial Area 2.30 Sq. In.
Effective Volume N/A Cu. In.	Effective Volume 255.3 Cu. In.

Total Effective Volume: 255.3 Cubic Inches
Percentage of WRV Examined Via This Technique: 35.7 %
Percentage of WRV ID Surface Region Examined: 51.2 %

C. 1/2 Vee-Path Technique (Two Beam-Directions) Central Axis Projection

Side of Weld 2/5	Side of Weld N/A
WRV Limits a-f-k-l-e	WRV Limits
Effective Length 108.5 Inches	Effective Length ___ Inches
Axial Area 1.69 Sq. In.	Axial Area ___ Sq. In.
Effective Volume 183.4 Cu. In.	Effective Volume N/A Cu. In.

Total Effective Volume: 183.4 Cubic Inches
Percentage of WRV Examined Via This Technique 25.7 %
Percentage of WRV ID Surface Region Examined 50.1 %

ARKS

* SIDE (2) OF WELD IS OBSTRUCTED BY LONGITUDINAL WELD GLS (2.46") AND BY A WELDED LIFTING LUG (15.0") FOR A TOTAL LIMITATION OF 17.50"
** SIDE (5) OF WELD IS LIMITED ONLY BY A WELDED LIFTING LUG (15.0")
HEAD CURVATURE LIMITS EXAM FROM (5) SIDE (FOR COMPLETE LENGTH.

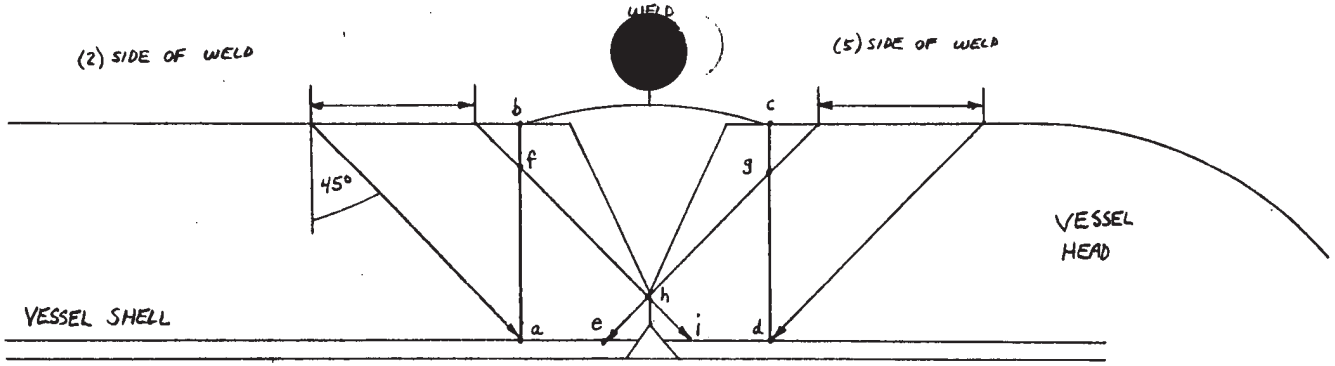

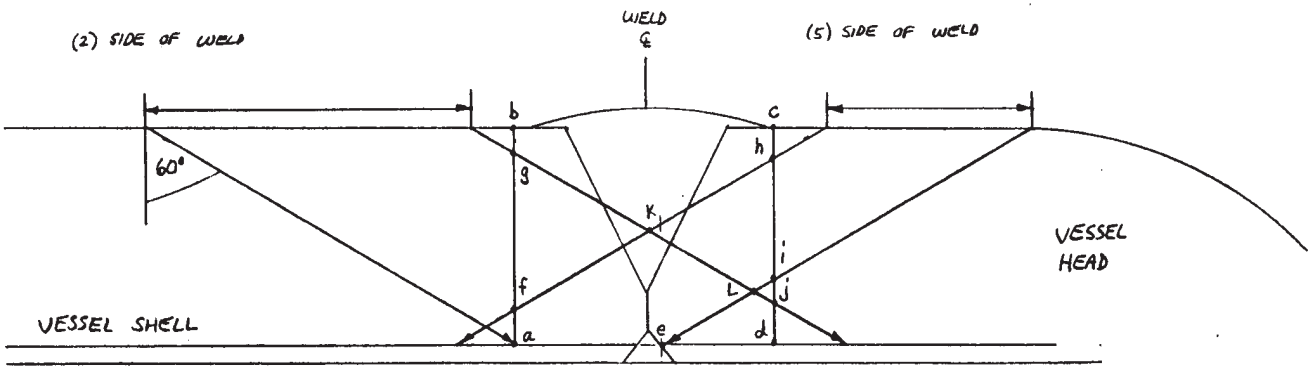

SCALE : 0.5" = 1.0"

REFERENCE:

DELTA SOUTHERN DRAWING # D- 4/047

WELD VOLUMETRIC COVERAGE ASSESSMENT

1989 Exams

COMPONENT DATA

gram Plan Item No.: 112 Weld No.: 1 Loop/Line No.: BORON INJECTION TANK Drawing No.: 2-1220

onent Type: ☐ Piping ☑ Vessel Configuration: TOP HEAD-TO-SHELL WELD (C/S WITH S/S CLAD)

Outside Diameter: 53.4" Nominal Wall: HEAD: 1.68" SHELL: 2.70" Circumference: 167.6"

WELD & REQUIRED VOLUME DATA

Axial Area: 2.20 Square Inches

WRV Length: 60.0 Inches (Circumferential)

WRV Volume: 132.0 Cubic Inches

EXAMINATION ACCESS

☑ Two Side Access ☐ One Side Access

☐ Unobstructed ☐ Unobstructed

☐ One Side Obstructed ☐ Obstructed

☑ Two Sides Obstructed

EXAMINATION COVERAGE

Examination Angle 45°

A. 1/2 Vee-Path Technique (One Beam-Directions) Central Axis Projection

Side of Weld 2
WRV Limits a-f-h
Effective Length 60.0 Inches
Axial Area 0.337 Sq. In.
Effective Volume 20.22 Cu. In.

Side of Weld N/A
WRV Limits
Effective Length ___ Inches
Axial Area ___ Sq. In.
Effective Volume N/A Cu. In.

Total Effective Volume: 20.22 Cubic Inches
Percentage of WRV Examined Via This Technique: 15.3 %
Percentage of WRV ID Surface Region Examined: 56.2 %

B. 1/2 Vee-Path Technique (one Beam-Directions) Central Axis Projection

Side of Weld N/A
WRV Limits
Effective Length ___ Inches
Axial Area ___ Sq. In.
Effective Volume N/A Cu. In.

Side of Weld 5
WRV Limits d-g-e
Effective Length 60.0 Inches
Axial Area 0.87 Sq. In.
Effective Volume 52.2 Cu. In.

Total Effective Volume: 52.2 Cubic Inches
Percentage of WRV Examined Via This Technique: 39.5 %
Percentage of WRV ID Surface Region Examined: 93.0 %

C. 1/2 Vee-Path Technique (Two Beam-Directions) Central Axis Projection

Side of Weld 2/5
WRV Limits e-i-h
Effective Length 60.0 Inches
Axial Area 0.11 Sq. In.
Effective Volume 6.60 Cu. In.

Side of Weld N/A
WRV Limits
Effective Length ___ Inches
Axial Area ___ Sq. In.
Effective Volume N/A Cu. In.

Total Effective Volume: 6.60 Cubic Inches
Percentage of WRV Examined Via This Technique 5.0 %
Percentage of WRV ID Surface Region Examined 46.0 %

ARKS

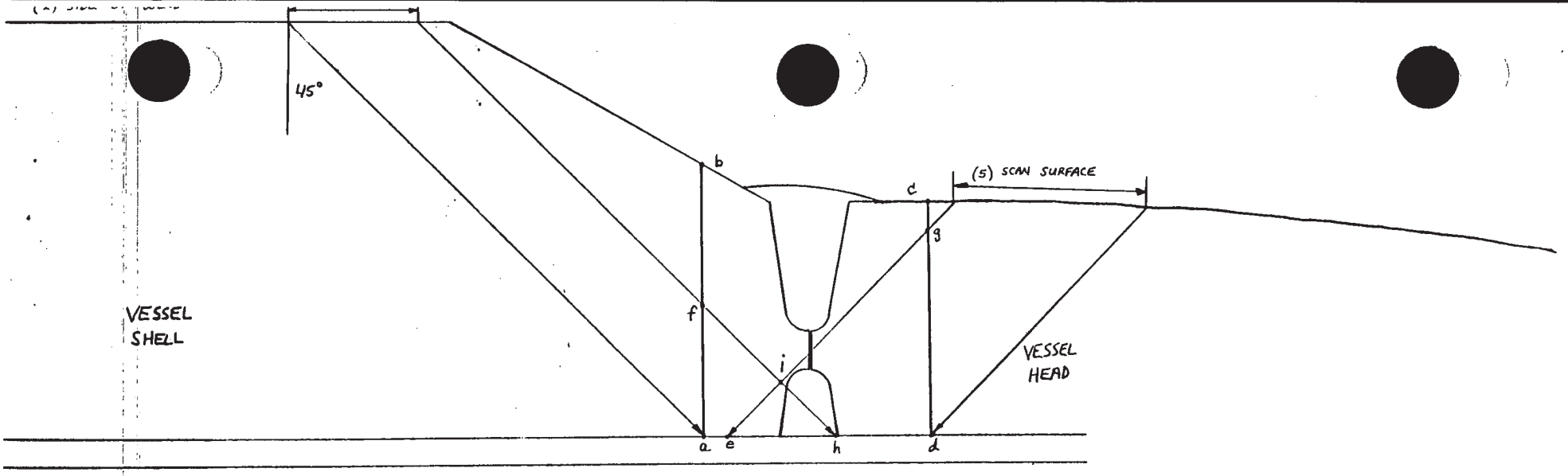
45°
b
c
(s) SCAN SURFACE
g
f
VESSEL
SHELL
i
VESSEL
HEAD
a
e
h
d

WELD VOLUMETRIC COVERAGE ASSESSMENT

1989 Exams

COMPONENT DATA

ram Plan Item No.: 112 Weld No.: 2 Loop/Line No.: BORON INJECTION TANK Drawing No.: 2-1220

nent Type: ☐ Piping ☑ Vessel Configuration: BOTTOM HEAD-TO-SHELL WELD (C/S WITH S/S CLAD)

Outside Diameter: 53.4" Nominal Wall: HEAD: 1.68" SHELL: 2.70" Circumference: 167.6"

WELD & REQUIRED VOLUME DATA

Axial Area: 2.20 Square Inches

WRV Length: 60.0 Inches (Circumferential)

WRV Volume: 132.0 Cubic Inches

EXAMINATION ACCESS

☑ Two Side Access ☐ One Side Access

☐ Unobstructed ☐ Unobstructed

☐ One Side Obstructed ☐ Obstructed

☑ Two Sides Obstructed

EXAMINATION COVERAGE

Examination Angle 60 °

A. 1/2 Vee-Path Technique (One Beam-Directions) Central Axis Projection

Side of Weld 2
WRV Limits a-f-h-d
*Effective Length 47.0 Inches
Axial Area 1.35 Sq. In.
Effective Volume 63.5 Cu. In.

Side of Weld N/A
WRV Limits ____
Effective Length ____ Inches
Axial Area ____ Sq. In.
Effective Volume N/A Cu. In.

Total Effective Volume: 63.5 Cubic Inches
Percentage of WRV Examined Via This Technique: 48.1 %
Percentage of WRV ID Surface Region Examined: 100 %

B. 1/2 Vee-Path Technique (one Beam-Directions) Central Axis Projection

Side of Weld N/A
WRV Limits ____
Effective Length ____ Inches
Axial Area ____ Sq. In.
Effective Volume N/A Cu. In.

Side of Weld 5
WRV Limits d-g-e-a
*Effective Length 47.0 Inches
Axial Area 1.42 Sq. In.
Effective Volume 66.7 Cu. In.

Total Effective Volume: 66.7 Cubic Inches
Percentage of WRV Examined Via This Technique: 50.5 %
Percentage of WRV ID Surface Region Examined: 100 %

C. 1/2 Vee-Path Technique (Two Beam-Directions) Central Axis Projection

Side of Weld 2/5
WRV Limits a-e-i-h-d
*Effective Length 47.0 Inches
Axial Area 1.10 Sq. In.
Effective Volume 51.7 Cu. In.

Side of Weld N/A
WRV Limits ____
Effective Length ____ Inches
Axial Area ____ Sq. In.
Effective Volume N/A Cu. In.

Total Effective Volume: 51.7 Cubic Inches
Percentage of WRV Examined Via This Technique 39.2 %
Percentage of WRV ID Surface Region Examined 100 %

ARKS

* ONE PARTIAL (5.0" WIDTH) AND ONE-HALF (8.0" WIDTH) WELDED SUPPORT LEGS RESTRICT A TOTAL OF 13.0" IN WELD LENGTH ON BOTH SIDES OF THE WELD.

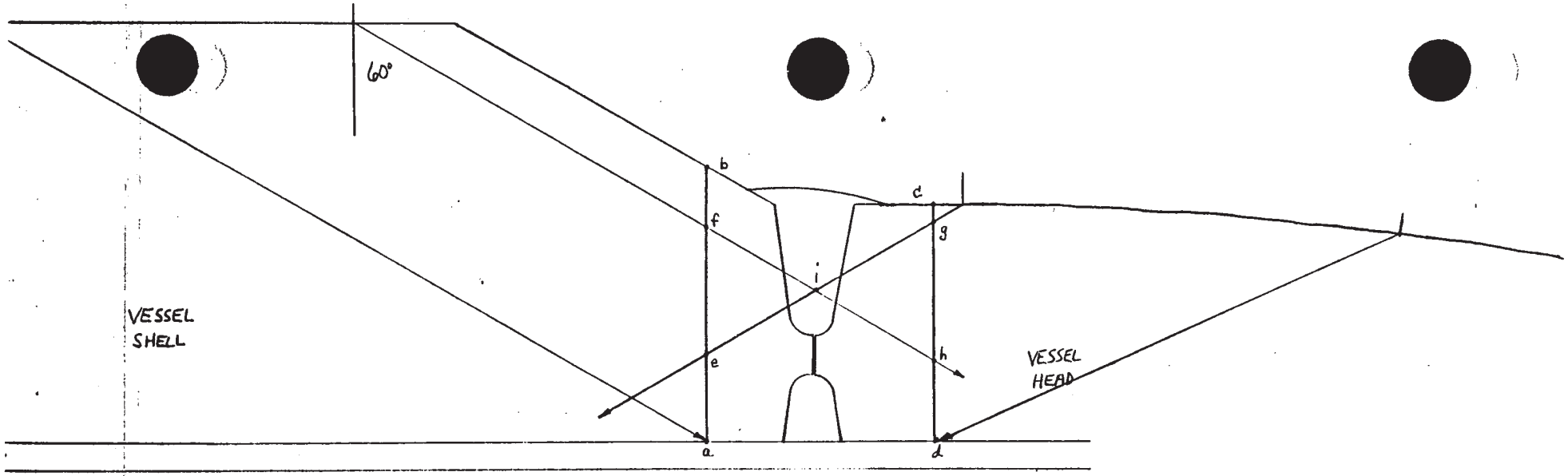
60°
b
c
f
g
i
e
h
VESSEL
SHELL
VESSEL
HEAD
a
d

WELD VOLUMETRIC COVERAGE ASSESSMENT

1990 Exams

COMPONENT DATA

ram Plan Item No.: 85 Weld No.: 1 Loop/Line No.: #31 SEAL WATER INJECTION FILTER Drawing No.: 2-1300

nent Type: ☐ Piping ☑ Vessel Configuration: HEAD-TO-SHELL WELD (S/S)

Outside Diameter: 10.75" Nominal Wall: 0.875" Circumference: 33.75"

WELD & REQUIRED VOLUME DATA

Axial Area: 1.68 Square Inches

WRV Length: 12.0 Inches (Circumferential)

WRV Volume: 20.16 Cubic Inches

EXAMINATION ACCESS

☑ Two Side Access ☐ One Side Access

☐ Unobstructed ☐ Unobstructed

☐ One Side Obstructed ☐ Obstructed

* ☑ Two Sides Obstructed

EXAMINATION COVERAGE

Examination Angle: 45 °

A. 1/2 Vee-Path Technique (one Beam-Direction) Central Axis Projection

Side of Weld 2
WRV Limits e-f-b-c-d
Effective Length 7.5 Inches
Axial Area 1.63 Sq. In.
** Effective Volume 12.23 Cu. In.

Side of Weld 5
WRV Limits d-c-b-a
Effective Length 7.5 Inches
Axial Area 1.68 Sq. In.
Effective Volume 12.6 Cu. In.

Total Effective Volume: 12.60 Cubic Inches
Percentage of WRV Examined Via This Technique: 62.5 %
Percentage of WRV ID Surface Region Examined: 62.5 %

B. Full Vee-Path Technique (one Beam-Direction) Central Axis Projection

Side of Weld 2
WRV Limits e-g-c-d
Effective Length 7.5 Inches
Axial Area 1.05 Sq. In.
Effective Volume 7.88 Cu. In.

Side of Weld 5
WRV Limits d-c-b-a
Effective Length 7.5 Inches
Axial Area 1.68 Sq. In.
Effective Volume 12.6 Cu. In.

Total Effective Volume: 12.60 Cubic Inches
Percentage of WRV Examined Via This Technique: 62.5 %
Percentage of WRV ID Surface Region Examined 62.5 %

C. Full Vee-Path Technique (Two Beam-Directions) Central Axis Projection

Side of Weld 2
WRV Limits e-g-c-d
Effective Length 7.5 Inches
Axial Area 1.05 Sq. In.
Effective Volume 7.88 Cu. In.

Side of Weld 5
WRV Limits d-c-b-a
Effective Length 7.5 Inches
Axial Area 1.68 Sq. In.
Effective Volume 12.6 Cu. In.

Total Effective Volume: 12.60 Cubic Inches
Percentage of WRV Examined Via This Technique 62.5 %
Percentage of WRV ID Surface Region Examined 62.5 %

ARKS

* A WELDED SUPPORT OBSTRUCTS 4.5" OF WELD LENGTH FROM BOTH SIDES OF THE WELD.

** REGION a-f-e WAS NOT EXAMINED VIA TECHNIQUE "A" FROM (2) SIDE OF WELD.

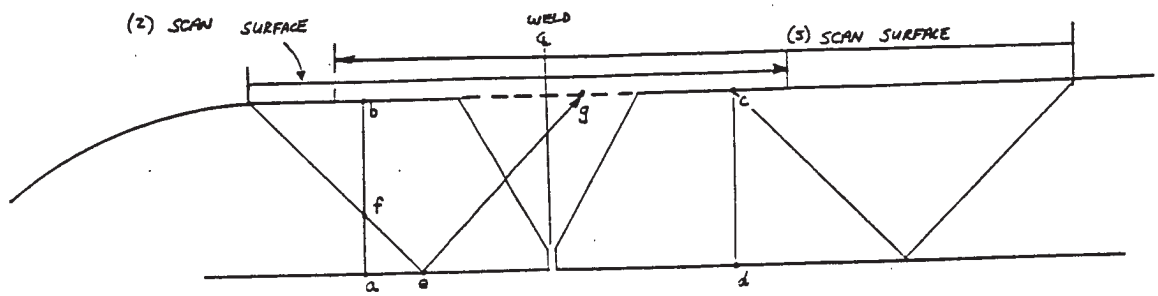

WELD #1

WELD VOLUMETRIC COVERAGE ASSESSMENT

1989 Exams

COMPONENT DATA

ram Plan Item No.: 117 Weld No.: 1 Loop/Line No.: #31 SEAL WATER INSECTION FILTER Drawing No.: 2-1300

nent Type: ☐ Piping ☑ Vessel Configuration: HEAD-TO-SHELL WELD (S/S)

Outside Diameter: 10.75" Nominal Wall: 0.875" Circumference: 33.75"

WELD & REQUIRED VOLUME DATA

Axial Area: 1.68 Square Inches

WRV Length: 12.0 Inches (Circumferential)

WRV Volume: 20.16 Cubic Inches

EXAMINATION ACCESS

☑ Two Side Access ☐ One Side Access

☐ Unobstructed ☐ Unobstructed

☐ One Side Obstructed ☐ Obstructed

☑ Two Sides Obstructed

EXAMINATION COVERAGE

Examination Angle: 45 °

A. 1/2 Vee-Path Technique (one Beam-Direction) Central Axis Projection

Side of Weld 2
WRV Limits e-f-b-c-d
*Effective Length 2.88 Inches
Axial Area 1.63 Sq. In.
Effective Volume 4.69 Cu. In.

Side of Weld 5
WRV Limits d-c-b-a
**Effective Length 4.87 Inches
Axial Area 1.68 Sq. In.
Effective Volume 8.18 Cu. In.

Total Effective Volume: 12.87 Cubic Inches
Percentage of WRV Examined Via This Technique: 63.8 %
Percentage of WRV ID Surface Region Examined: 60.5 %

B. Full Vee-Path Technique (one Beam-Direction) Central Axis Projection

Side of Weld 2
WRV Limits e-g-c-d
*Effective Length 2.88 Inches
Axial Area 1.05 Sq. In.
Effective Volume 3.02 Cu. In.

Side of Weld 5
WRV Limits d-c-b-a
**Effective Length 4.87 Inches
Axial Area 1.68 Sq. In.
Effective Volume 8.18 Cu. In.

Total Effective Volume: 11.20 Cubic Inches
Percentage of WRV Examined Via This Technique: 55.6 %
Percentage of WRV ID Surface Region Examined 60.5 %

C. Full Vee-Path Technique (Two Beam-Directions) Central Axis Projection

Side of Weld 2
WRV Limits e-g-c-d
*Effective Length 2.88 Inches
Axial Area 1.05 Sq. In.
Effective Volume 3.02 Cu. In.

Side of Weld 5
WRV Limits d-c-b-a
**Effective Length 4.87 Inches
Axial Area 1.68 Sq. In.
Effective Volume 8.18 Cu. In.

Total Effective Volume: 11.20 Cubic Inches
Percentage of WRV Examined Via This Technique 55.6 %
Percentage of WRV ID Surface Region Examined 60.5 %

ARKS

* FROM THE (5) SIDE OF THE WELD, COMPLETE AXIAL AREA COVERAGE WAS ACHIEVED, THEREFORE, COVERAGE FROM THE (2) SIDE OF THE WELD WAS LIMITED (FOR ASSESSMENT PURPOSES) TO WELD REGIONS NOT EXAMINED FROM SIDE (5).

** ONE (2" OD) NOZZLE AND ONE (4.25" WIDE) WELDED SUPPORT LIMIT EXAMINATION FROM THE (5) SIDE OF THE WELD. FROM THE (2) SIDE OF THE WELD, ONLY THE WELDED SUPPORT LIMITS THE EXAMINATION.

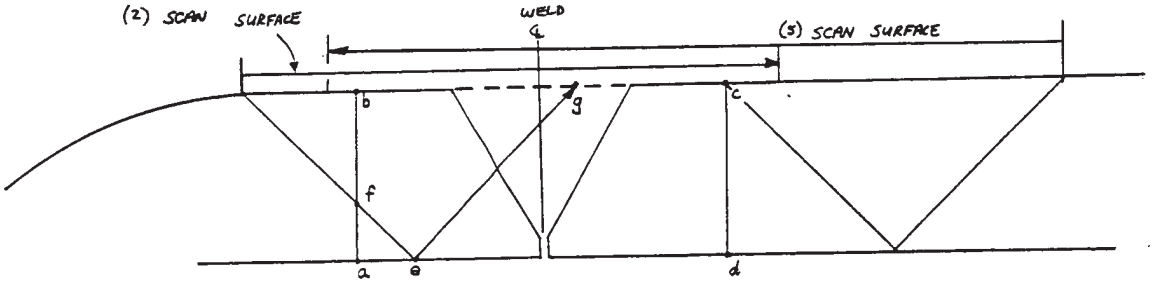

WELD #1

WELD VOLUMETRIC COVERAGE ASSESSMENT

1990 Exams

COMPONENT DATA

Program Plan Item No.: 87 Weld No.: 1 Loop/Line No.: REACTOR COOLANT FILTER Drawing No.: 2-1310

Component Type: ☐ Piping ☑ Vessel Configuration: BOTTOM HEAD-TO-SHELL WELD (S/S)

Outside Diameter: 14.0' Nominal Wall: 0.25" Circumference: 43.96

WELD & REQUIRED VOLUME DATA

Axial Area: 0.313 Square Inches

WRV Length: 15.0 Inches (Circumferential)

WRV Volume: 4.70 Cubic Inches

EXAMINATION ACCESS

☑ Two Side Access ☐ One Side Access

☐ Unobstructed ☐ Unobstructed

☐ One Side Obstructed ☐ Obstructed

*☑ Two Sides Obstructed

EXAMINATION COVERAGE

Examination Angle: 45 °

A. 1/2 Vee-Path Technique (one Beam-Direction) Central Axis Projection

Side of Weld 2
WRV Limits a-b-c-d
Effective Length 6.0 Inches
Axial Area 0.313 Sq. In.
Effective Volume 1.88 Cu. In.

Side of Weld 5
WRV Limits d-c-b-a
Effective Length 6.0 Inches
Axial Area 0.313 Sq. In.
Effective Volume 1.88 Cu. In.

Total Effective Volume: 3.76 Cubic Inches
Percentage of WRV Examined Via This Technique: 80.0 %
Percentage of WRV ID Surface Region Examined: 80.0 %

B. Full Vee-Path Technique (Two Beam-Directions) Beam-Width Prpjection

Side of Weld N/A
WRV Limits _____
Effective Length ____ Inches
Axial Area _____ Sq. In.
Effective Volume N/A Cu. In.

Side of Weld N/A
WRV Limits _____
Effective Length ____ Inches
Axial Area _____ Sq. In.
Effective Volume N/A Cu. In.

Total Effective Volume: N/A Cubic Inches
Percentage of WRV Examined Via This Technique: N/A %
Percentage of WRV ID Surface Region Examined N/A %

C. Full Vee-Path Technique (Two Beam-Directions) Central Axis Projection

Side of Weld 2
WRV Limits a-b-c-d
Effective Length 6.0 Inches
Axial Area 0.313 Sq. In.
Effective Volume 1.88 Cu. In.

Side of Weld 5
WRV Limits d-c-b-a
Effective Length 6.0 Inches
Axial Area 0.313 Sq. In.
Effective Volume 1.88 Cu. In.

Total Effective Volume: 3.76 Cubic Inches
Percentage of WRV Examined Via This Technique 80.0 %
Percentage of WRV ID Surface Region Examined 80.0 %

REMARKS

* TWO (4.5" WIDE) WELDED SUPPORTS (2WS & 3WS) OBSTRUCT A TOTAL OF 9.0" FROM WELD LENGTH ON BOTH SIDES OF WELD.

1990 Exams

COMPONENT DATA

Program Plan Item No.: 87 Weld No.: 3 Loop/Line No.: REACTOR COOLANT FILTER Drawing No.: 2-1310

onent Type: ☐ Piping ☑ Vessel Configuration: FLANGE-TO-TOP HEAD WELD (5/5)

O[illegible]e Diameter: 14.0" Nominal Wall: 0.25" Circumference: 43.96

WELD & REQUIRED VOLUME DATA

Axial Area: 0.313 Square Inches

WRV Length: 15.0 Inches (Circumferential)

WRV Volume: 4.70 Cubic Inches

EXAMINATION ACCESS

☑ Two Side Access ☐ One Side Access

☐ Unobstructed ☐ Unobstructed

☐ One Side Obstructed ☐ Obstructed

* ☑ Two Sides Obstructed

EXAMINATION COVERAGE

Examination Angle: 45°

A. 1/2 Vee-Path Technique (one Beam-Direction) Central Axis Projection

Side of Weld 2	Side of Weld 5
WRV Limits j-f-c-d	WRV Limits d-c-f-e
Effective Length 15.0 Inches	Effective Length 15.0 Inches
Axial Area 0.206 Sq. In.	Axial Area 0.269 Sq. In.
Effective Volume 3.09 Cu. In.	Effective Volume 4.04 Cu. In.

** Total Effective Volume: 4.03 Cubic Inches
Percentage of WRV Examined Via This Technique: 85.7 %
Percentage of WRV ID Surface Region Examined: 96.0 %

B. Full Vee-Path Technique (Two Beam-Directions) Beam-Width Prpjection

Side of Weld 2	Side of Weld 5
WRV Limits j-g-c-d	WRV Limits d-h-f-j
Effective Length 15.0 Inches	Effective Length 15.0 Inches
Axial Area 0.143 Sq. In.	Axial Area 0.183 Sq. In.
Effective Volume 2.15 Cu. In.	Effective Volume 2.75 Cu. In.

Total Effective Volume: 4.70 Cubic Inches
Percentage of WRV Examined Via This Technique: 100 %
Percentage of WRV ID Surface Region Examined 100 %

C. Full Vee-Path Technique (Two Beam-Directions) Central Axis Projection

Side of Weld 2	Side of Weld 5
WRV Limits j-f-c-d	WRV Limits d-c-f-e
Effective Length 15.0 Inches	Effective Length 15.0 Inches
Axial Area 0.206 Sq. In.	Axial Area 0.269 Sq. In.
Effective Volume 3.09 Cu. In.	Effective Volume 4.04 Cu. In.

** Total Effective Volume: 4.03 Cubic Inches
Percentage of WRV Examined Via This Technique 85.7 %
Percentage of WRV ID Surface Region Examined 96.0 %

[illegible]RKS

* FLANGE & HEAD OD CONFIGURATIONS LIMIT (AXIAL) SCANNING ON BOTH SIDES OF THE WELD.

** WRV REGION j-f-c-d WAS NOT EXAMINED USING TECHNIQUES "A" or "C".

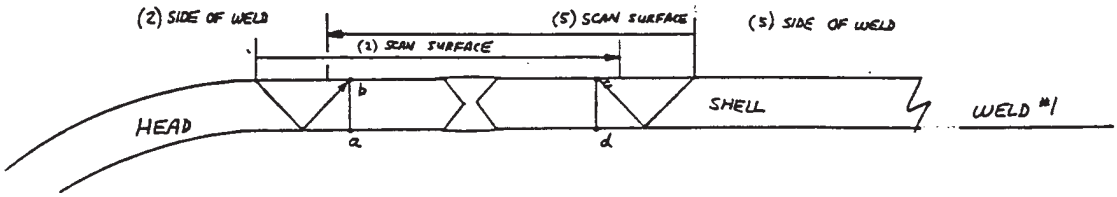
(2) SIDE OF WELD
(5) SCAN SURFACE
(5) SIDE OF WELD
(1) SCAN SURFACE
HEAD
SHELL
WELD #1
a
b
c
d

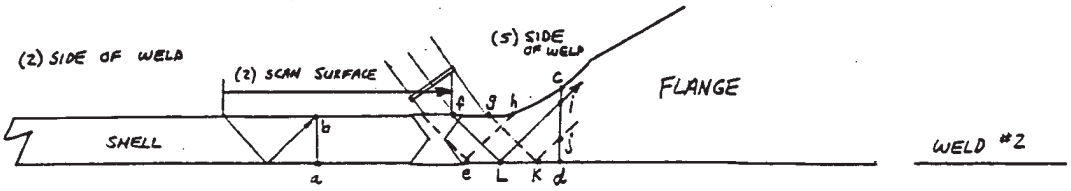
(2) SIDE OF WELD
(2) SCAN SURFACE
(5) SIDE OF WELD
FLANGE
SHELL
WELD #2
a
b
c
d
e
f
g
h
i
j
K
L

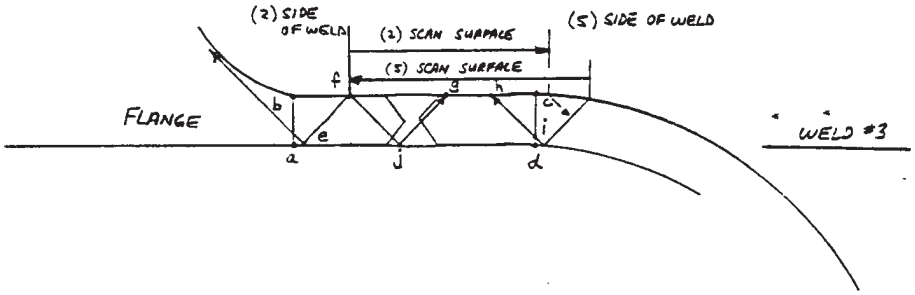
(2) SIDE OF WELD
(2) SCAN SURFACE
(5) SIDE OF WELD
(5) SCAN SURFACE
FLANGE
WELD #3
a
b
c
d
e
f
g
h
i
j

WELD VOLUMETRIC COVERAGE ASSESSMENT

1989 Exams

COMPONENT DATA

Program Plan Item No.: 121 Weld No.: 1 Loop/Line No.: REACTOR COOLANT FILTER Drawing No.: 2-1310

Component Type: ☐ Piping ☑ Vessel Configuration: BOTTOM HEAD-TO-SHELL WELD (S/S)

Outside Diameter: 14.0" Nominal Wall: 0.25" Circumference: 43.96"

WELD & REQUIRED VOLUME DATA

Axial Area: 0.313 Square Inches

WRV Length: 15.0 Inches (Circumferential)

WRV Volume: 4.70 Cubic Inches

EXAMINATION ACCESS

☑ Two Side Access ☐ One Side Access

☐ Unobstructed ☐ Unobstructed

☐ One Side Obstructed ☐ Obstructed

☑ Two Sides Obstructed

EXAMINATION COVERAGE

Examination Angle: 45 °

A. 1/2 Vee-Path Technique (one Beam-Direction) Central Axis Projection

Side of Weld 2
WRV Limits a-b-c-d
*Effective Length 2.90 Inches
Axial Area 0.313 Sq. In.
Effective Volume 0.91 Cu. In.

Side of Weld 5
WRV Limits d-c-b-a
*Effective Length 5.35 Inches
Axial Area 0.313 Sq. In.
Effective Volume 1.67 Cu. In.

Total Effective Volume: 2.58 Cubic Inches
Percentage of WRV Examined Via This Technique: 54.8 %
Percentage of WRV ID Surface Region Examined: 55.0 %

B. Full Vee-Path Technique (Two Beam-Directions) Beam-Width Prpjection

Side of Weld N/A
WRV Limits _____
Effective Length ____ Inches
Axial Area _____ Sq. In.
Effective Volume N/A Cu. In.

Side of Weld N/A
WRV Limits _____
Effective Length ____ Inches
Axial Area _____ Sq. In.
Effective Volume ____ Cu. In.

Total Effective Volume: N/A Cubic Inches
Percentage of WRV Examined Via This Technique: N/A %
Percentage of WRV ID Surface Region Examined N/A %

C. Full Vee-Path Technique (Two Beam-Directions) Central Axis Projection

Side of Weld 2
WRV Limits a-b-c-d
Effective Length 2.90 Inches
Axial Area 0.313 Sq. In.
Effective Volume 0.91 Cu. In.

Side of Weld 5
WRV Limits d-c-b-a
Effective Length 5.35 Inches
Axial Area 0.313 Sq. In.
Effective Volume 1.67 Cu. In.

Total Effective Volume: 2.58 Cubic Inches
Percentage of WRV Examined Via This Technique 54.8 %
Percentage of WRV ID Surface Region Examined 55.0 %

REMARKS

* (2) SIDE OF WELD: ONE AND ONE-HALF (4.5" WIDE) WELDED SUPPORTS LIMIT THE EXAM. ONLY 2.90" EFFECTIVE LENGTH CLAIMED FOR THIS WELD SIDE, SINCE COMPLETE COVERAGE ACHIEVED FROM (5) SIDE - EXCEPT FOR LENGTH OF (2" OD) NOZZLE, FOR WHICH COVERAGE IS BEING CLAIMED FROM SIDE (2).
(5) SIDE OF WELD: ONE AND ONE-HALF (4.5" WIDE) WELDED SUPPORTS AND ONE (2" OD) NOZZLE OBSTRUCT 9.65" FROM WELD LENGTH.

WELD VOLUMETRIC COVERAGE ASSESSMENT

1989 Exams

COMPONENT DATA

Pr[illegible]m Plan Item No.: 121 Weld No.: 3 Loop/Line No.: REACTOR COOLANT FILTER Drawing No.: 2-1310

C[illegible]ent Type: ☐ Piping ☑ Vessel Configuration: FLANGE -TO- TOP HEAD WELD (s/s)

Outside Diameter: 14.0" Nominal Wall: 0.25" Circumference: 43.96"

WELD & REQUIRED VOLUME DATA

Axial Area: 0.313 Square Inches

WRV Length: 15.0 Inches (Circumferential)

WRV Volume: 4.70 Cubic Inches

EXAMINATION ACCESS

☑ Two Side Access ☐ One Side Access

☐ Unobstructed ☐ Unobstructed

☐ One Side Obstructed ☐ Obstructed

☑ Two Sides Obstructed

EXAMINATION COVERAGE

Examination Angle: 45 °

A. 1/2 Vee-Path Technique (one Beam-Direction) Central Axis Projection

Side of Weld 2	Side of Weld 5
WRV Limits j-f-c-d	WRV Limits d-c-f-e
Effective Length 15.0 Inches	Effective Length 15.0 Inches
Axial Area 0.206 Sq. In.	Axial Area 0.269 Sq. In.
Effective Volume 3.09 Cu. In.	Effective Volume 4.04 Cu. In.

*Total Effective Volume: 4.03 Cubic Inches
Percentage of WRV Examined Via This Technique: 85.7 %
Percentage of WRV ID Surface Region Examined: 96.0 %

B. Full Vee-Path Technique (one Beam-Direction) Central Axis Projection

Side of Weld 2	Side of Weld 5
WRV Limits j-g-c-d	WRV Limits d-h-f-j
Effective Length 15.0 Inches	Effective Length 15.0 Inches
Axial Area 0.143 Sq. In.	Axial Area 0.183 Sq. In.
Effective Volume 2.15 Cu. In.	Effective Volume 2.75 Cu. In.

Total Effective Volume: 4.70 Cubic Inches
Percentage of WRV Examined Via This Technique: 100 %
Percentage of WRV ID Surface Region Examined 100 %

C. Full Vee-Path Technique (Two Beam-Directions) Central Axis Projection

Side of Weld 2	Side of Weld 5
WRV Limits j-f-c-d	WRV Limits d-c-f-e
Effective Length 15.0 Inches	Effective Length 15.0 Inches
Axial Area 0.206 Sq. In.	Axial Area 0.269 Sq. In.
Effective Volume 3.09 Cu. In.	Effective Volume 4.04 Cu. In.

*Total Effective Volume: 4.03 Cubic Inches
Percentage of WRV Examined Via This Technique 85.7 %
Percentage of WRV ID Surface Region Examined 96.0 %

R[illegible]KS

* WRV REGION j-f-c-d WAS NOT EXAMINED USING TECHNIQUES 'A' OR 'C'.

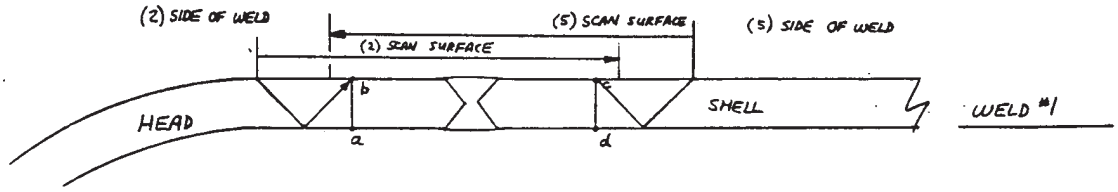
(2) SIDE OF WELD
(5) SCAN SURFACE
(5) SIDE OF WELD
(2) SCAN SURFACE
HEAD
SHELL
WELD #1
a
b
d

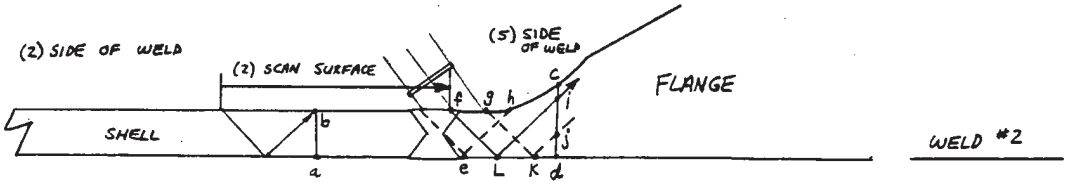
(2) SIDE OF WELD
(5) SIDE OF WELD
(2) SCAN SURFACE
FLANGE
SHELL
WELD #2
a
b
c
d
e
f
g
h
i
j
K
L

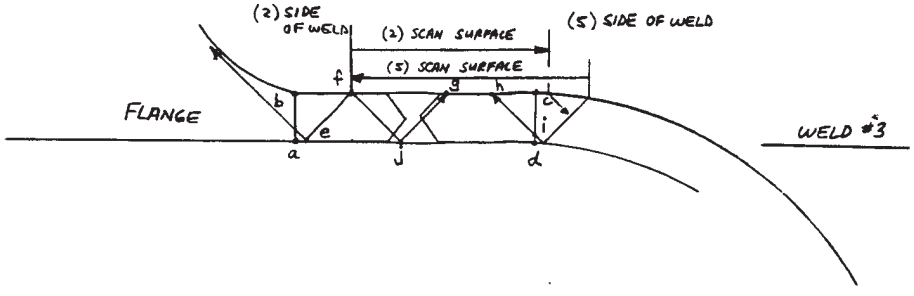
(2) SIDE OF WELD
(2) SCAN SURFACE
(5) SIDE OF WELD
(5) SCAN SURFACE
FLANGE
WELD #3
a
b
c
d
e
f
g
h
i
j

ATTACHMENT 6

WESTINGHOUSE NUCLEAR SERVICE DIVISION
INSPECTION SERVICES

LIMITATION TO EXAMINATION

PLANT INDIAN POINT UNIT No.3 SKETCH INT-2-2100 Rev.4

SYST/COMP LOOP31 Line 2 28" MAINSTEAM PROCEDURE INT-ISI-70 Rev.1

EXAMINER [illegible] LEVEL II [illegible] DATE 5-14-92

RELATED TO: U/T____ P/T____ M/T X V/T____ ITEM(S): PR-4

PROVIDE GENERAL INFORMATION TO DESCRIBE APPROXIMATE SIZE, LOCATION AND TYPE OF LIMITATION.

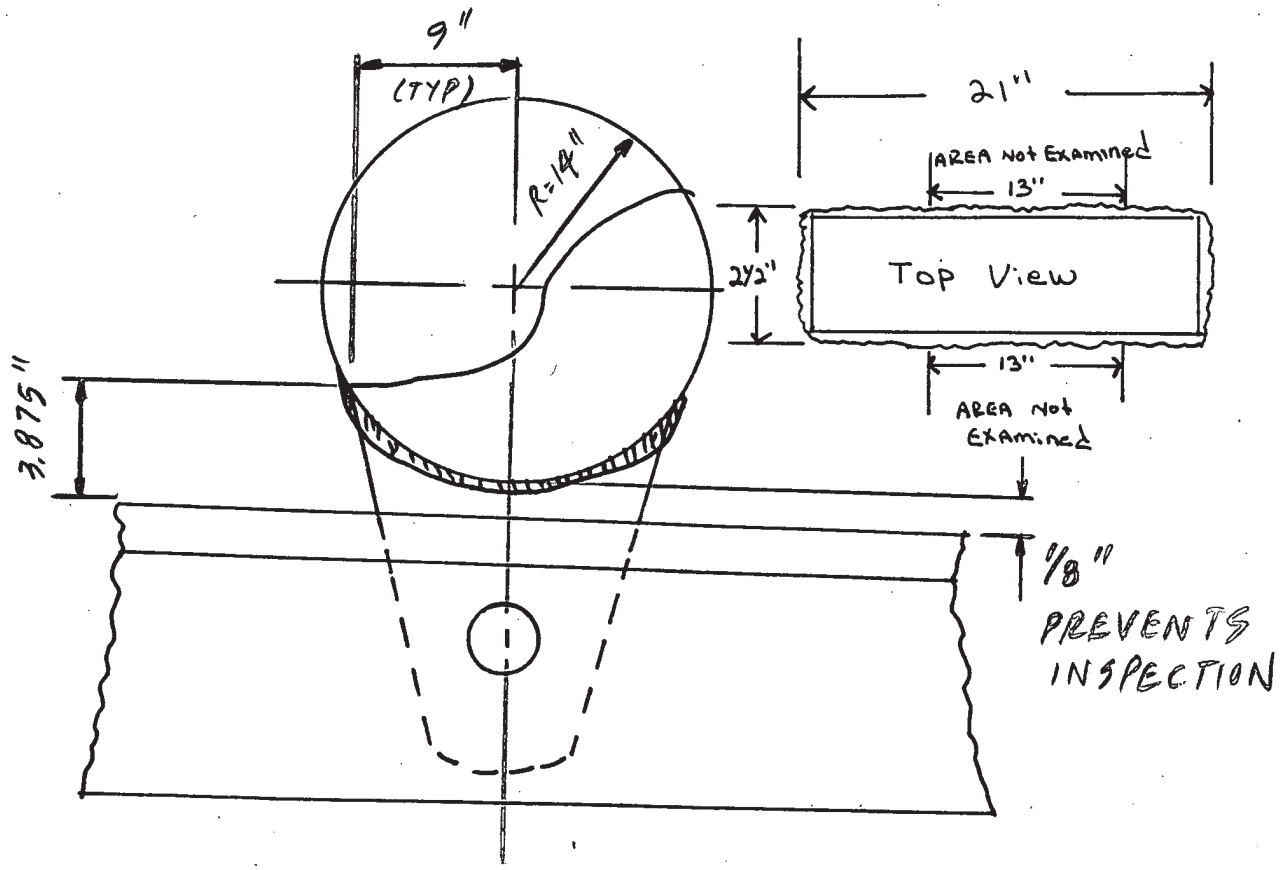

26" OF WELD WAS EXAMINED IN ONE DIRECTION ONLY DUE to Limited ACCESSIBILITY.

[illegible] 5/27/92

SITE ISI LEVEL III

AS 6-9-92

F49077

WESTINGHOUSE NUCLEAR SERVICE DIVISION
INSPECTION SERVICES

LIMITATION TO EXAMINATION

PLANT INDAIN POINT UNIT No. 3 SKETCH INT-2-2100 REV 4

SYST/COMP LOOP 31 LINE 2 28" MAINSTEAM PROCEDURE INT-ISI-70, REV. 1

EXAMINER [signature] LEVEL II DATE 5-8-92

RELATED TO: U/T ____ P/T ____ M/T X V/T ____ ITEM(S): PR-5

PROVIDE GENERAL INFORMATION TO DESCRIBE APPROXIMATE SIZE, LOCATION AND TYPE OF LIMITATION.

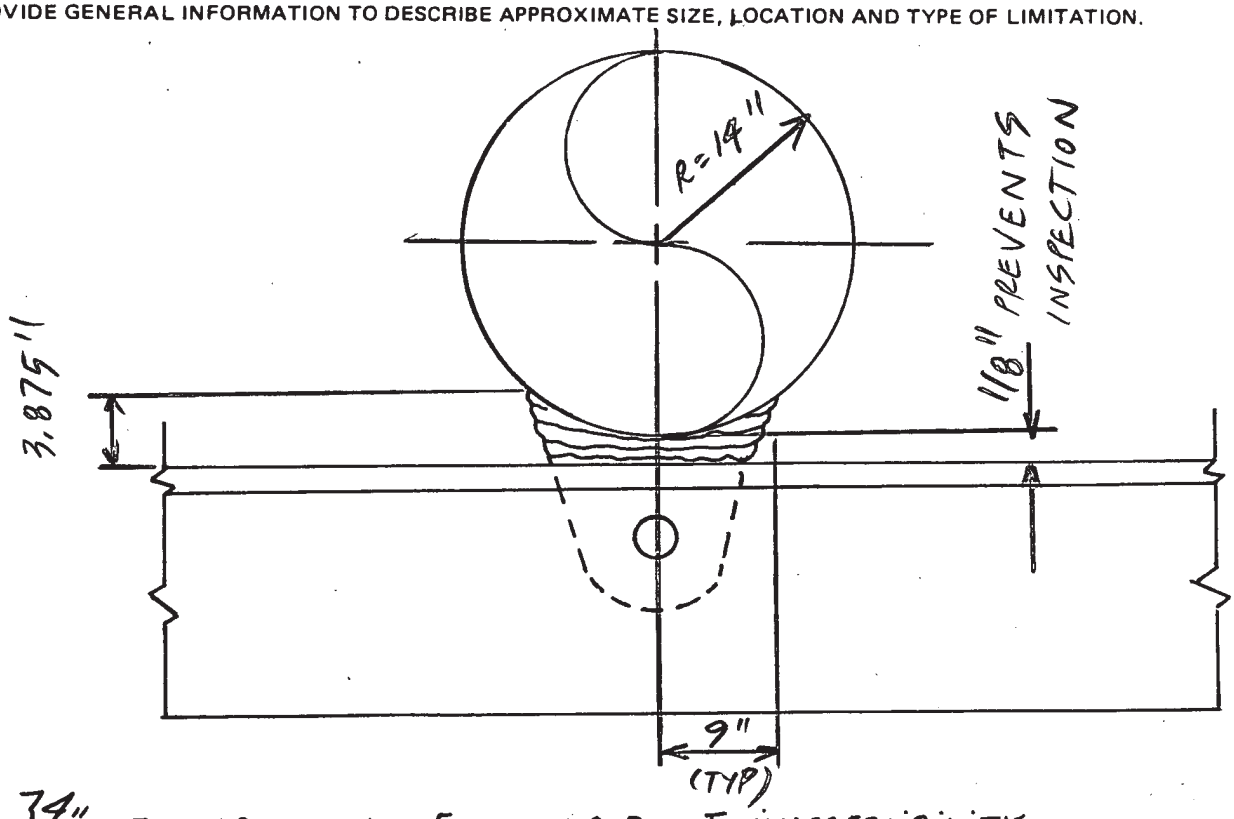

34" OF WELD WAS NOT EXAMINED DUE TO INACCESSIBILITY

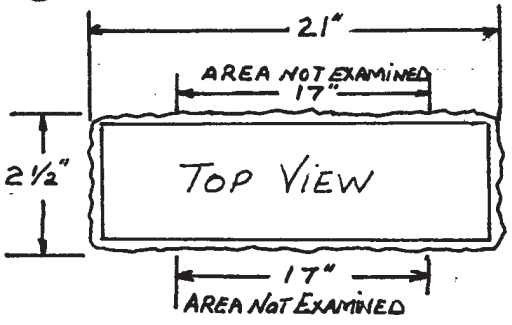

[signature] 5/14/92
SITE NDE LEVEL III

APS/HSG 5/28/92

F49077

WESTINGHOUSE NUCLEAR SERVICE DIVISION
INSPECTION SERVICES

LIMITATION TO EXAMINATION

PLANT INDIAN POINT UNIT No. 3 SKETCH INT-2-2100 REV. 4

SYST/COMP LOOP 31 LINE 2 28" MAINSTEAM PROCEDURE INT-ISI-70, REV. 1

EXAMINER [signature] LEVEL II [signature] DATE 5-8-92

RELATED TO: U/T ____ P/T ____ M/T X V/T ____ ITEM(S): HMS-15

PROVIDE GENERAL INFORMATION TO DESCRIBE APPROXIMATE SIZE, LOCATION AND TYPE OF LIMITATION.

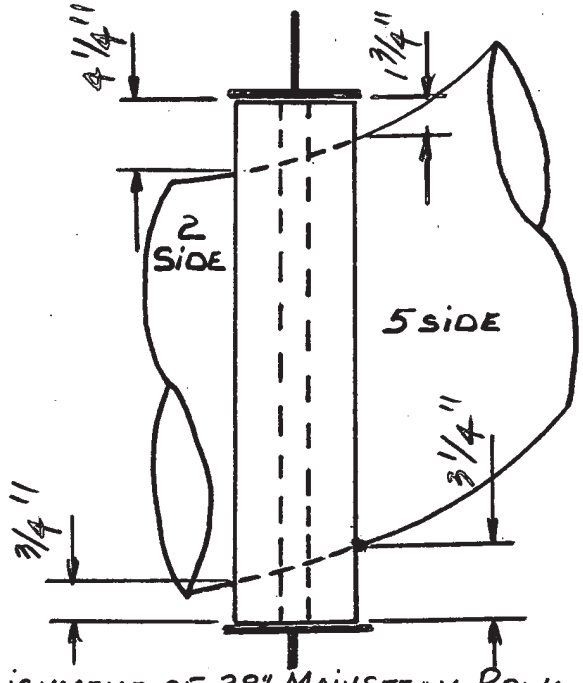

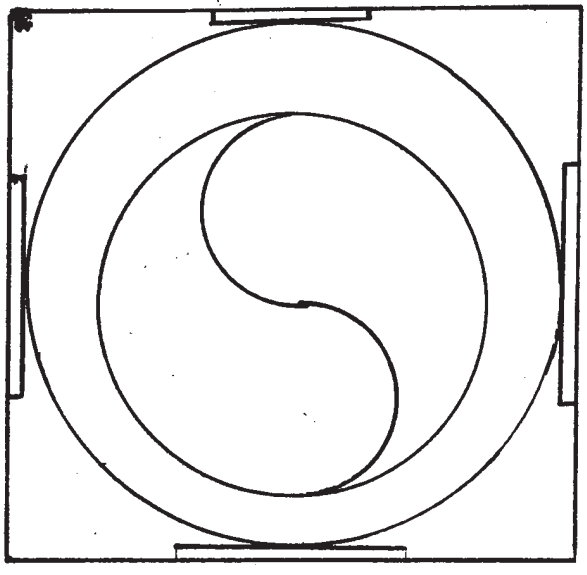

2 SIDE

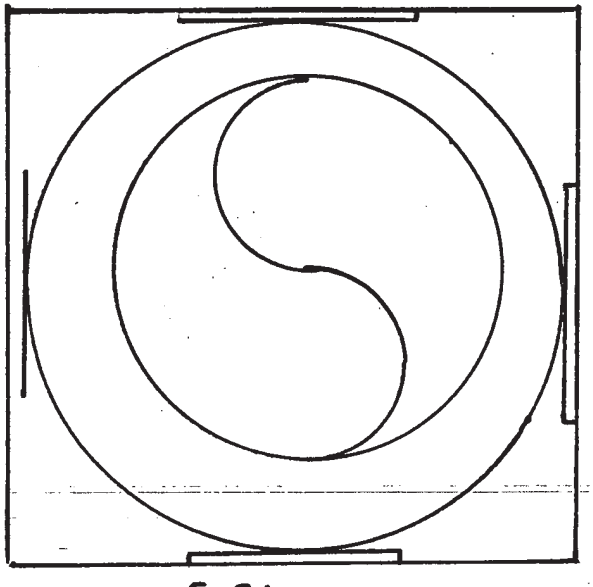

5 SIDE

ALIGNMENT OF 28" MAINSTEAM PIPING IN INTEGRALLY WELDED ATTACHMENT HMS-15 RESTRICTS EXAMINATION AS NOTED BELOW:

2 SIDE: FROM 39" TO 41" (CIRCUMFERENTIAL) CLOCKWISE EXAMINATION WAS LIMITED TO ONE DIRECTION ONLY FROM 41" TO 73" CLOCKWISE NO EXAMINATION WAS PERFORMED, NOT ACCESSIBLE

5 SIDE: FROM 22" TO 26" (CIRCUMFERENTIAL) CLOCKWISE EXAMINATION WAS LIMITED TO ONE DIRECTION ONLY FROM 87" TO 22" CLOCKWISE NO EXAMINATION WAS PERFORMED, NOT ACCESSIBLE

[signature] 5/14/92

SITE NDE LEVEL III

APS/HSB 5/28/92

DUE TO THE EXISTING FRAME AND THE SLOPE OF THE MAIN STEAM PIPE THIGH THAT FRAME TOTAL INSPECTION COULD NOT BE DONE.

F49077

WESTINGHOUSE NUCLEAR SERVICE DIVISION
INSPECTION SERVICES

LIMITATION TO EXAMINATION

PLANT INDIAN POINT UNIT No. 3 SKETCH INT-2-2101

SYST/COMP LOOP 31 28" MAINSTEAM LINE 2 PROCEDURE INT-ISI-70 REV. 1

EXAMINER James R. Dellusso LEVEL II DATE 10-19-90

RELATED TO: U/T ____ P/T ____ M/T ✓ V/T ____ ITEM(S): MSR-2 & MSR-4

PROVIDE GENERAL INFORMATION TO DESCRIBE APPROXIMATE SIZE, LOCATION AND TYPE OF LIMITATION.

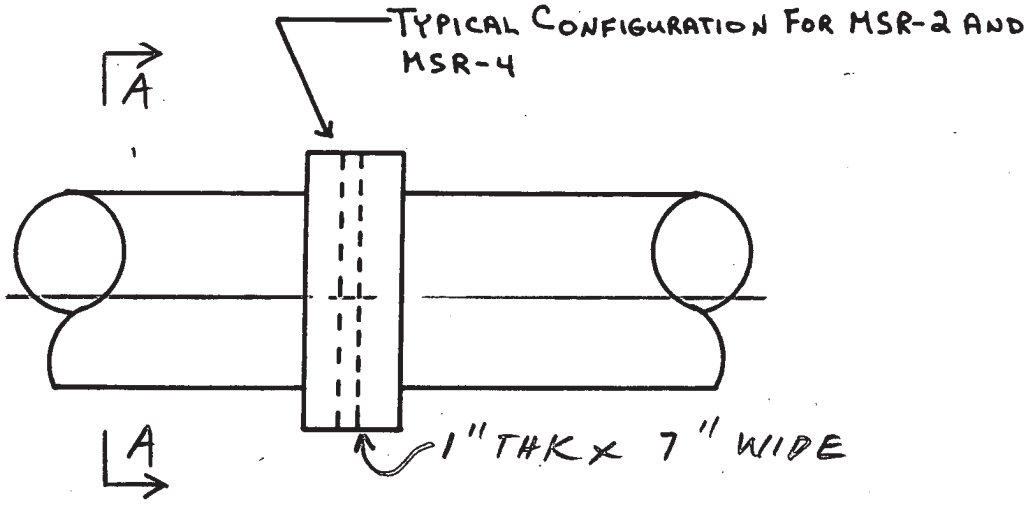

INTEGRALLY WELDED ATTACHMENT CONFIGURATION RESTRICTS EXAMINATION TO ONE DIRECTION, PARALLEL, TO INNER SURFACES

THE 3" DIMENSION FROM THE OUTSIDE OF THE PIPE TO THE INSIDE OF THE 36" O.D. RING. DOES NOT PERMIT ACCESS IN THE PERPENDICULAR DIRECTION.

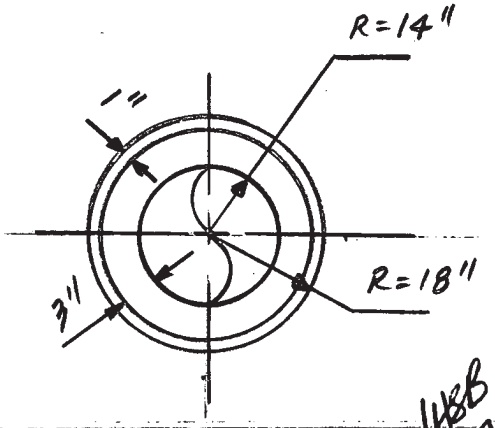

SECT A-A

APS/HSB 11-2-90

10/31/90

F49077

WESTINGHOUSE NUCLEAR SERVICE DIVISION
INSPECTION SERVICES

LIMITATION TO EXAMINATION

PLANT INDIAN POINT UNIT No.3 SKETCH INT-2-2101

SYST/COMP LOOP 31 28" MAINSTEAM LINE 2 PROCEDURE INT-ISI-70 REV. 1

EXAMINER William G. Kelley LEVEL II DATE 10-20-90

RELATED TO: U/T ____ P/T ____ M/T ✓ V/T ____ ITEM(S): MSR-13

PROVIDE GENERAL INFORMATION TO DESCRIBE APPROXIMATE SIZE, LOCATION AND TYPE OF LIMITATION.

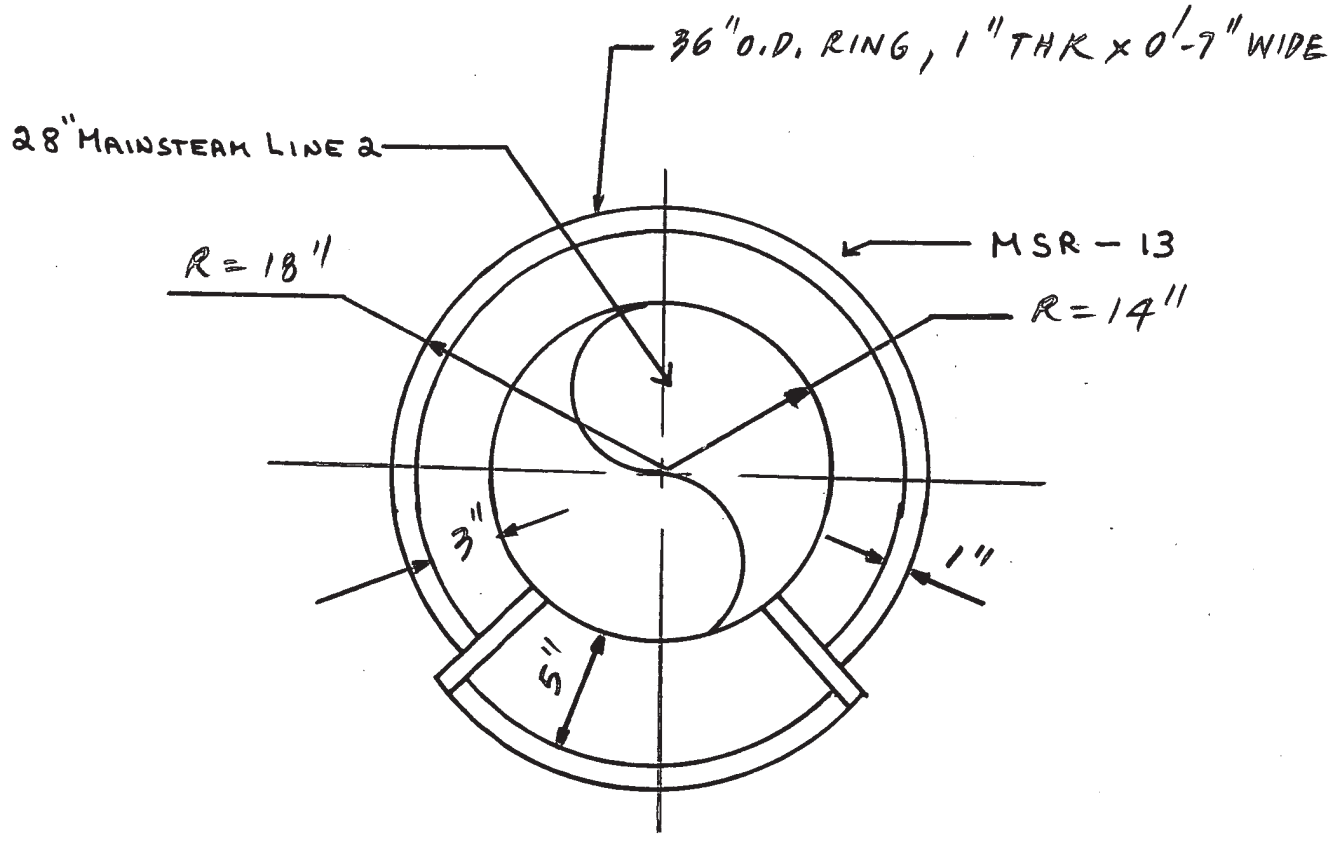

INTEGRALLY WELDED ATTACHMENT CONFIGURATION RESTRICTS EXAMINATION TO ONE DIRECTION, PARALLEL, TO INNER SURFACE

THE 3" DIMENSION FROM THE OUTSIDE OF THE PIPE TO THE INSIDE OF THE 36" O.D. RING DOES NOT PERMIT ACCESS IN THE PERPENDICULAR DIRECTION.

APS/HSB 11-2-90

10/31/90

F49077

WESTINGHOUSE NUCLEAR SERVICE DIVISION
INSPECTION SERVICES

LIMITATION TO EXAMINATION

PLANT INDIAN POINT UNIT No. 3 SKETCH INT-2-2101

SYST/COMP 28" MAINSTEAM LINE 2 Loop 31 PROCEDURE INT-ISI-70, REV 1

EXAMINER James R. Dellmuso LEVEL II DATE 10-19-90

RELATED TO: U/T____ P/T____ M/T ✓ V/T____ ITEM(S): MSR-29

PROVIDE GENERAL INFORMATION TO DESCRIBE APPROXIMATE SIZE, LOCATION AND TYPE OF LIMITATION.

INTEGRALLY WELDED ATTACHMENT CONFIGURATION RESTRICTS EXAMINATION TO ONE DIRECTION, PARALLEL, TO INNER SURFACES

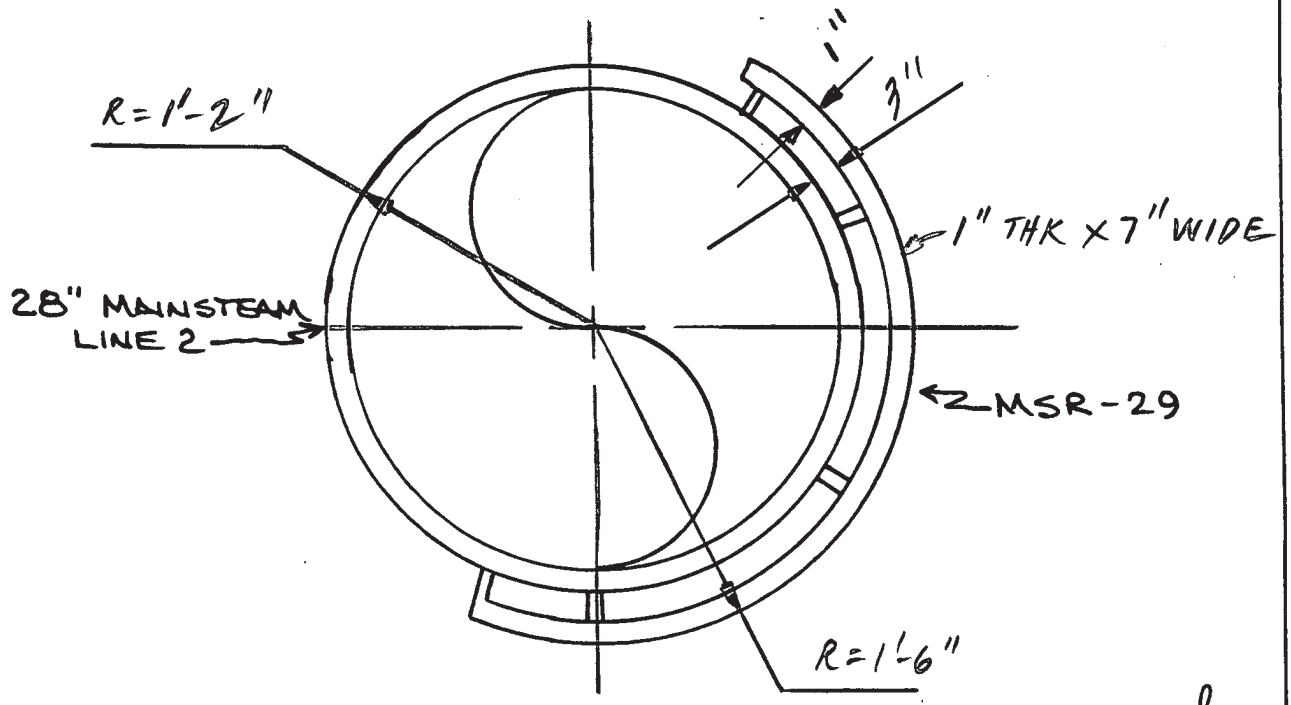

APS/HSB 11-2-90

10/31/90

F49077

WESTINGHOUSE NUCLEAR SERVICE DIVISION
INSPECTION SERVICES

LIMITATION TO EXAMINATION

PLANT INDIAN POINT UNIT No. 3 SKETCH INT-2-2102 Rev. 4

SYST/COMP Loop 31 Line 6 18" Feedwater PROCEDURE INT-IST-70 Rev. 1

EXAMINER [illegible] LEVEL II [illegible] LEVEL II DATE 5-13-92

RELATED TO: U/T ____ P/T ____ M/T X V/T ____ ITEM(S): PR-4

PROVIDE GENERAL INFORMATION TO DESCRIBE APPROXIMATE SIZE, LOCATION AND TYPE OF LIMITATION.

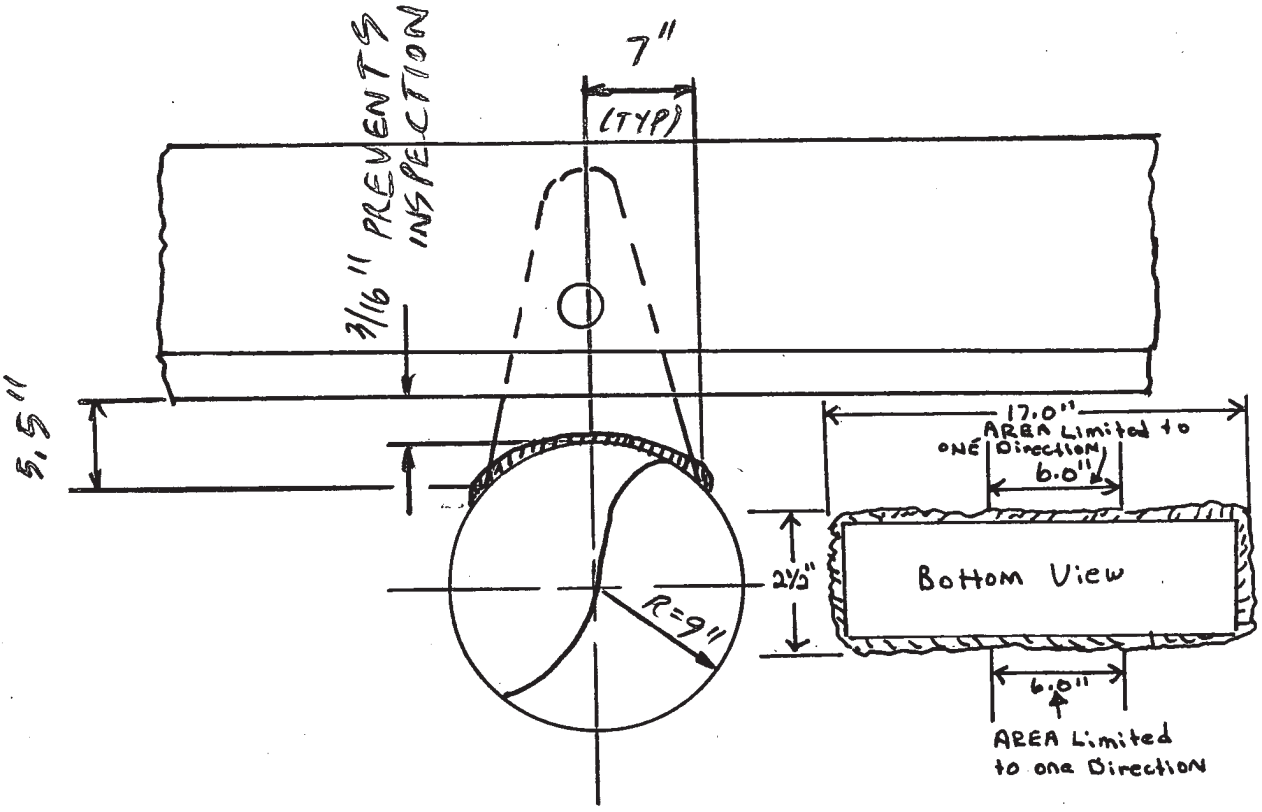

12" OF WELD WAS EXAMINED IN ONE direction ONLY Due to Limited Accessibility

[illegible] 5/14/92

SITE NDE LEVEL III

[illegible] 5/15/92

F49077

WESTINGHOUSE NUCLEAR SERVICE DIVISION
INSPECTION SERVICES

LIMITATION TO EXAMINATION

PLANT INDIAN POINT UNIT NO. 3 SKETCH INT-2-2102

SYST/COMP 18" FEEDWATER LOOP 31 LINE 6 PROCEDURE INT-ISI-70 REV. 0

EXAMINER Robert H Cline LEVEL II DATE 3/30/89

RELATED TO: U/T ____ P/T ____ M/T ✓ V/T ____ ITEM(S): HBF-17

PROVIDE GENERAL INFORMATION TO DESCRIBE APPROXIMATE SIZE, LOCATION AND TYPE OF LIMITATION.

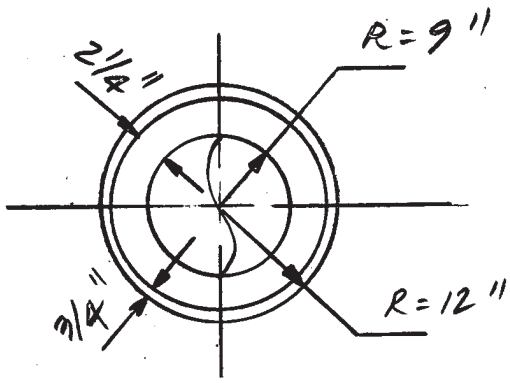

THE 2 1/4" DIMENSION FROM THE OUTSIDE OF THE PIPE TO THE INSIDE OF THE 24" O.D. RING DOES NOT PERMIT ACCESS IN THE PERPENDICULAR DIRECTION.

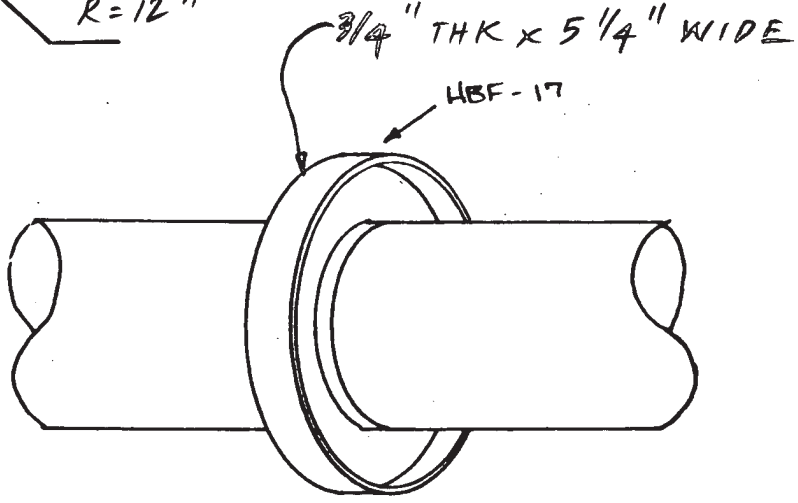

WELDED SUPPORT CONFIGURATION PREVENTS ACCESS FOR PERPENDICULAR DIRECTION EXAM.
EXAMINED IN PARALLEL DIRECTION ONLY.
NOTE: SUPPORT IS WELDED ON BOTH SIDES

APS/HSB 5/24/89

F49077

WESTINGHOUSE NUCLEAR SERVICE DIVISION
INSPECTION SERVICES

LIMITATION TO EXAMINATION

PLANT INDIAN POINT UNIT No. 3 SKETCH INT-2-2102 REV. 4

SYST/COMP LOOP 31 LINE 6 18" FEEDWATER PROCEDURE INT-ISI-70, REV. 1

EXAMINER [illegible] LEVEL II DATE 5-22-92

RELATED TO: U/T ____ P/T ____ M/T X V/T ____ ITEM(S): HBF-19

PROVIDE GENERAL INFORMATION TO DESCRIBE APPROXIMATE SIZE/LOCATION AND TYPE OF LIMITATION.

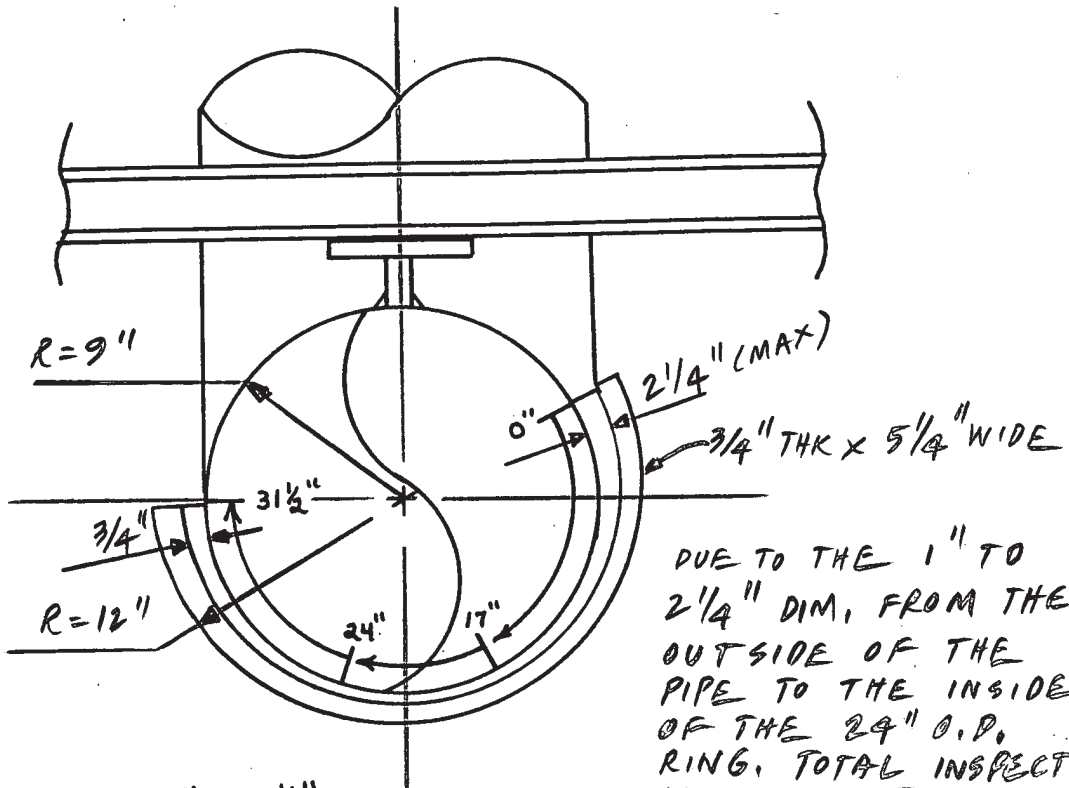

DUE TO THE 1" TO 2 1/4" DIM. FROM THE OUTSIDE OF THE PIPE TO THE INSIDE OF THE 24" O.D. RING. TOTAL INSPECTION CAN NOT BE DONE

EXAMINED 0" TO 17" AND 24" TO 31 1/2" IN ONE DIRECTION ONLY ON 5 SIDE OF HBF-19 DUE TO LIMITED ACCESSIBILITY.

NO EXAMINATION FROM 17" TO 24", 5 SIDE INACCESSIBLE.

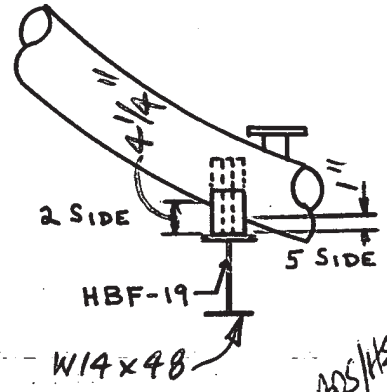

[illegible] 5/27/92
SITE NDE LEVEL III

ADS/HSG 6-3-92

F49077

WESTINGHOUSE NUCLEAR SERVICE DIVISION
INSPECTION SERVICES

LIMITATION TO EXAMINATION

PLANT INDIAN POINT UNIT No.3 SKETCH INT-2-2200 Rev.4

SYST/COMP LOOP 32 Line 1 28" MAINSTEAM PROCEDURE INT-ISI-70 Rev. 1

EXAMINER [illegible] LEVEL II [illegible] LEVEL II DATE 5-14-92

RELATED TO: U/T____ P/T____ M/T X V/T____ ITEM(S): PR-4

PROVIDE GENERAL INFORMATION TO DESCRIBE APPROXIMATE SIZE, LOCATION AND TYPE OF LIMITATION.

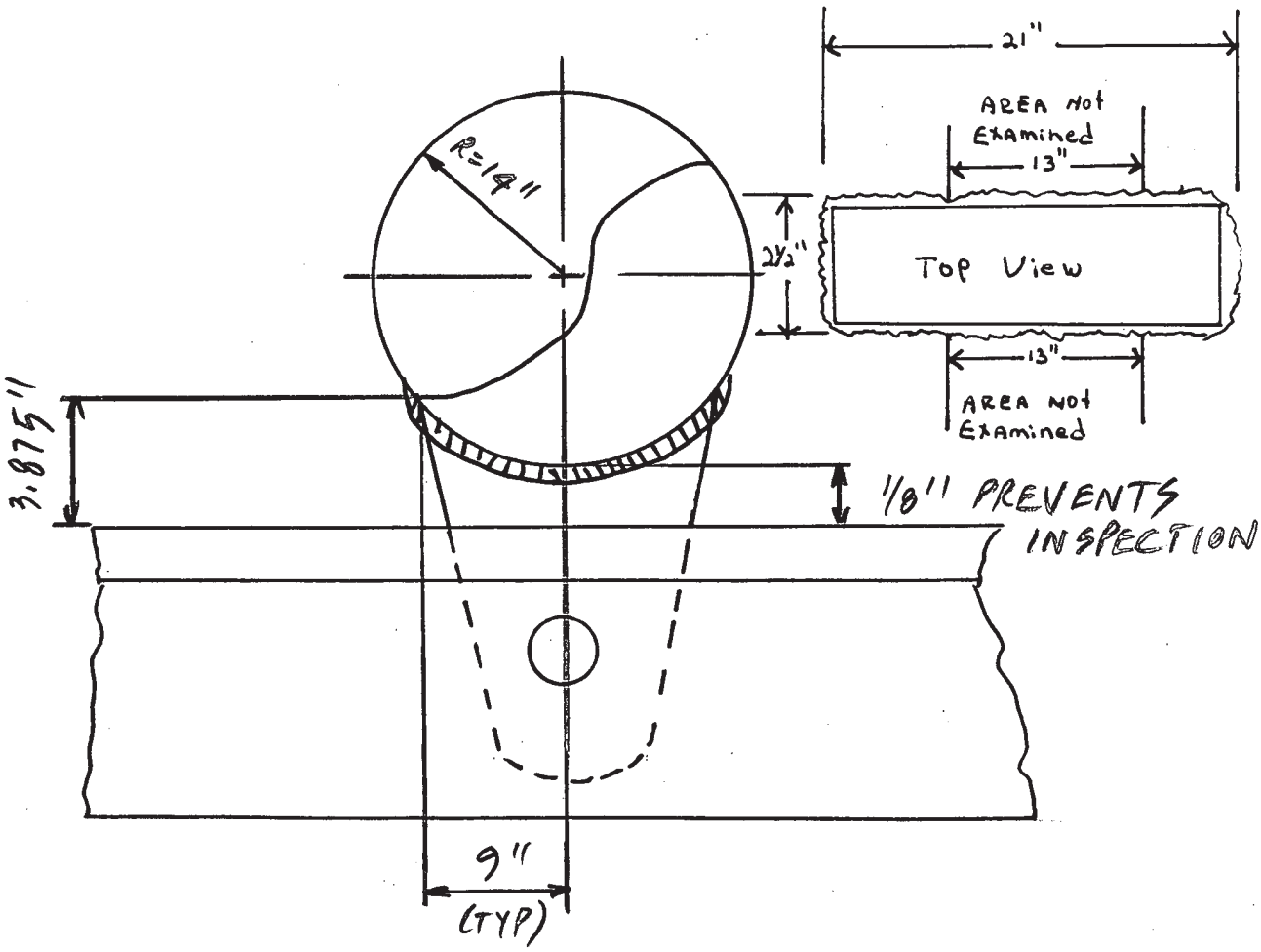

26" OF WELD WAS EXAMINED IN ONE DIRECTION ONLY DUE to Limited ACCESSIBILITY.

[illegible] 5/27/92

SITE NDE LEVEL III

[illegible] 6-4-92

F49077

WESTINGHOUSE NUCLEAR SERVICE DIVISION
INSPECTION SERVICES

LIMITATION TO EXAMINATION

PLANT INDIAN POINT UNIT No. 3 SKETCH INT-2-2200 REV. 4

SYST/COMP LOOP 32 LINE 1 28" MAINSTEAM PROCEDURE INT-ISI-70, REV. 1

EXAMINER [signature] LEVEL II [signature] DATE 5-4-92

RELATED TO: U/T ____ P/T ____ M/T X V/T ____ ITEM(S): HMS-16

PROVIDE GENERAL INFORMATION TO DESCRIBE APPROXIMATE SIZE, LOCATION AND TYPE OF LIMITATION.

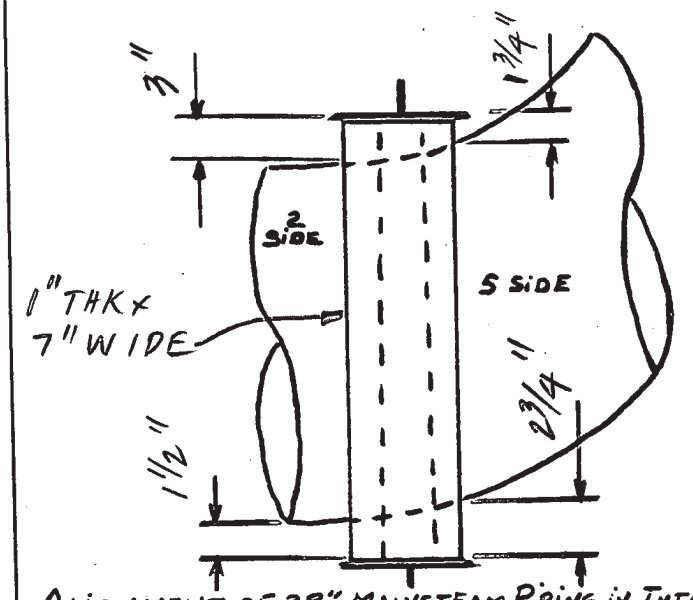

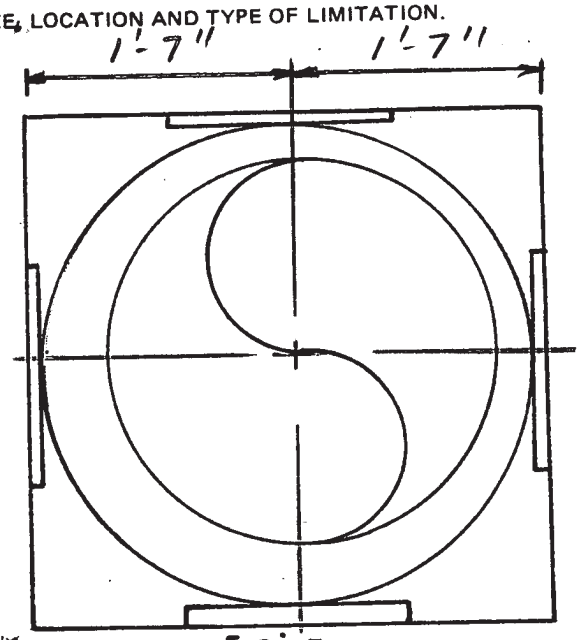

5 SIDE

ALIGNMENT OF 28" MAINSTEAM PIPING IN INTEGRALLY WELDED ATTACHMENT HMS-16 RESTRICTS EXAMINATION AS NOTED BELOW:

2 SIDE: FROM 38" CLOCKWISE TO 46" CLOCKWISE AND WAS LIMITED TO ONE DIRECTION ONLY. FROM 46" CLOCKWISE TO 68½" CLOCKWISE NO EXAMINATION WAS PERFORMED.

5 SIDE: FROM 18" CLOCKWISE TO 28" CLOCKWISE AND 82" CLOCKWISE TO 88" CLOCKWISE EXAMINATION WAS LIMITED TO ONE DIRECTION ONLY. FROM 88" CLOCKWISE TO 18" CLOCKWISE NO EXAMINATION WAS PERFORMED.

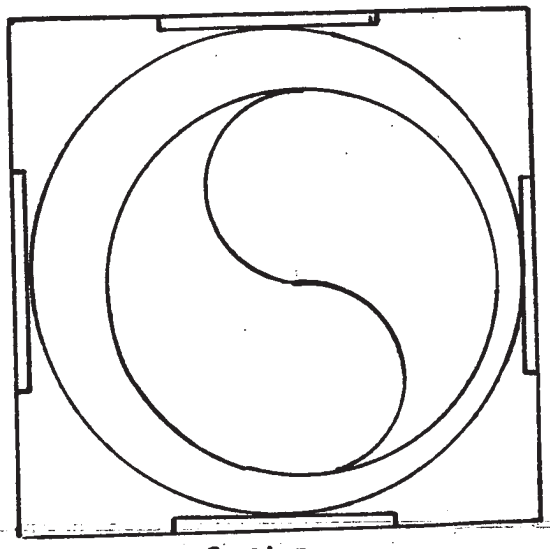

2 SIDE

[signature] 5/13/92
SITE LEVEL III

DUE TO THE EXISTING STEEL FRAME AND THE SLOPE OF THE MAIN STEAM PIPE THROUGH THAT FRAME TOTAL INSPECTION COULD NOT BE DONE.

AP 5/14/92

F49077

WESTINGHOUSE NUCLEAR SERVICE DIVISION
INSPECTION SERVICES

LIMITATION TO EXAMINATION

PLANT INDIAN POINT UNIT No. 3 SKETCH INT-2-2201 REV. 4

SYST/COMP LOOP 32 LINE 1 28" MAINSTEAM PROCEDURE INT-ISI-70 REV. 1

EXAMINER William S. Holley LEVEL II DATE 4-29-92

RELATED TO: U/T ____ P/T ____ M/T X V/T ____ ITEM(S): MSR-12

PROVIDE GENERAL INFORMATION TO DESCRIBE APPROXIMATE SIZE, LOCATION AND TYPE OF LIMITATION.

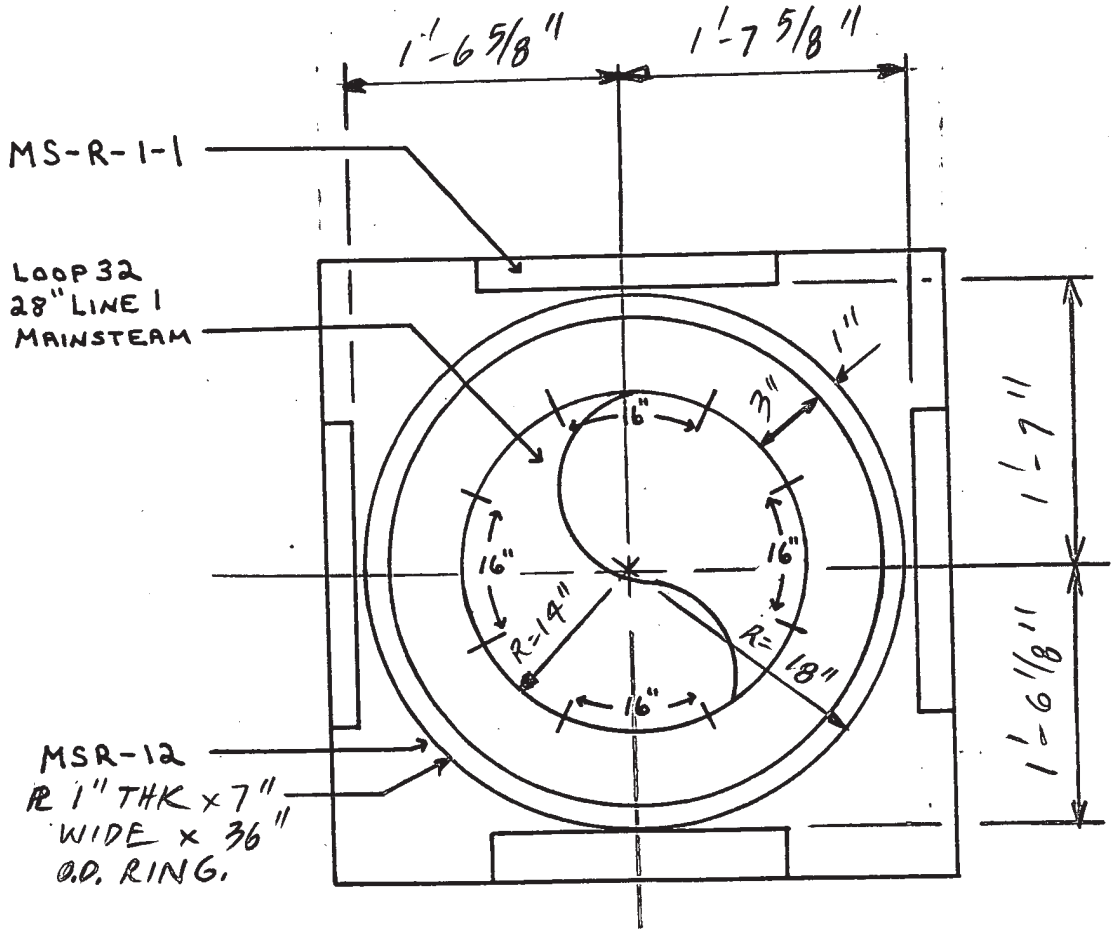

INTEGRALLY WELDED ATTACHMENT MSR-12 AND RESTRAINT MS-R-1-1 CONFIGURATION RESTRICTS EXAMINATION TO ONE DIRECTION, PARALLEL, TO INNER SURFACE IN FOUR 16" AREAS SHOWN ABOVE, BOTH 2 AND 5 SIDES.

5/13/92
SITE NDE LEVEL III

ARS/HSB 5/14/92

F49077

WESTINGHOUSE NUCLEAR SERVICE DIVISION
INSPECTION SERVICES

LIMITATION TO EXAMINATION

PLANT INDIAN POINT UNIT No.3 SKETCH INT-2-2202 Rev.4

SYST/COMP LOOP 32 Line 5 18" Feedwater PROCEDURE INT-ISI-70 Rev.1

EXAMINER [signature] LEVEL II [signature] DATE 5-13-92

RELATED TO: U/T ____ P/T ____ M/T X V/T ____ ITEM(S): PR-4

PROVIDE GENERAL INFORMATION TO DESCRIBE APPROXIMATE SIZE, LOCATION AND TYPE OF LIMITATION.

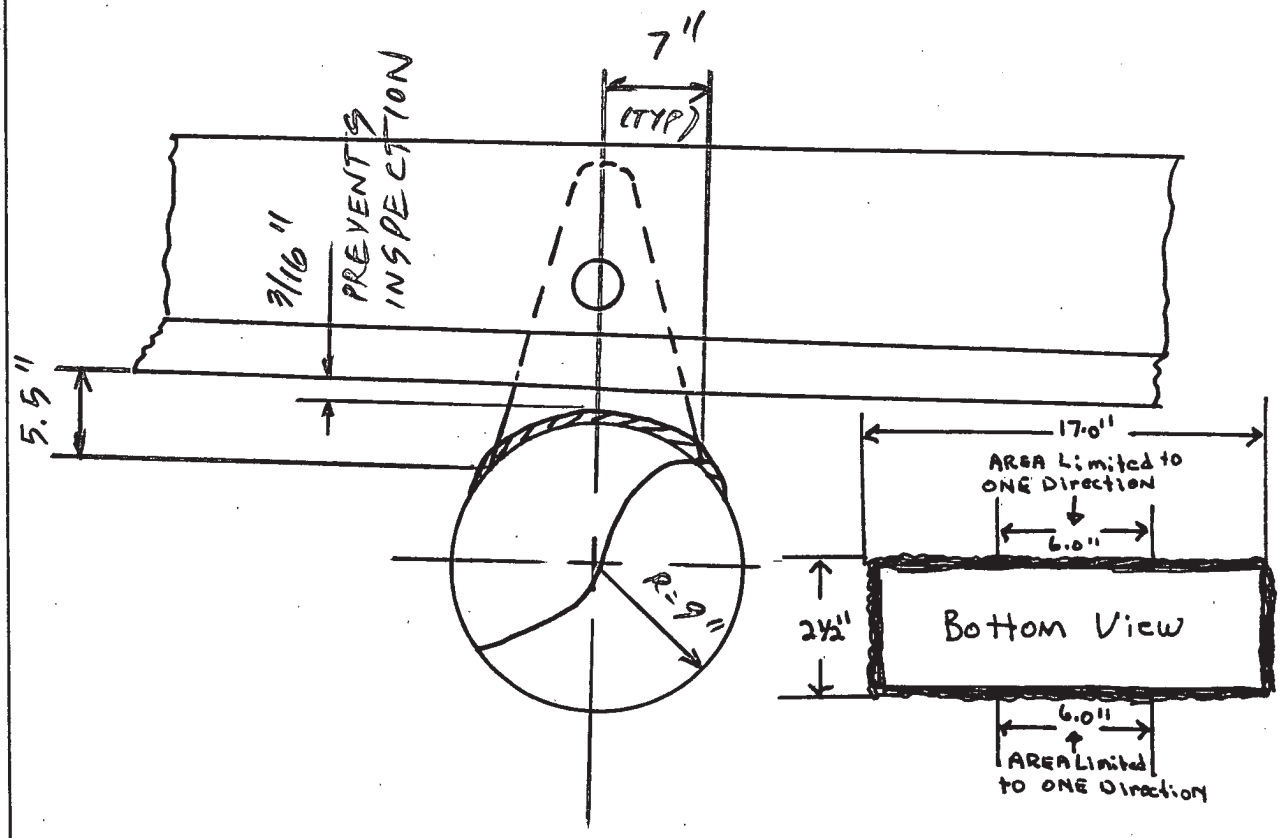

12" of weld was examined in one direction only due to limited accessibility

[signature] 5/14/92

SITE NDE LEVEL III

APS/HKB 5/28/92

F49077

WESTINGHOUSE NUCLEAR SERVICE DIVISION
INSPECTION SERVICES

LIMITATION TO EXAMINATION

PLANT INDIAN POINT UNIT No. 3 SKETCH INT-2-2202 REV. 4

SYST/COMP LOOP 32 LINE 5 18" FEEDWATER PROCEDURE INT-ISI-70 REV. 1

EXAMINER [illegible] LEVEL II [illegible] DATE 5-19-92

RELATED TO: U/T ____ P/T ____ M/T X V/T ____ ITEM(S): PWR-247

PROVIDE GENERAL INFORMATION TO DESCRIBE APPROXIMATE SIZE, LOCATION AND TYPE OF LIMITATION.

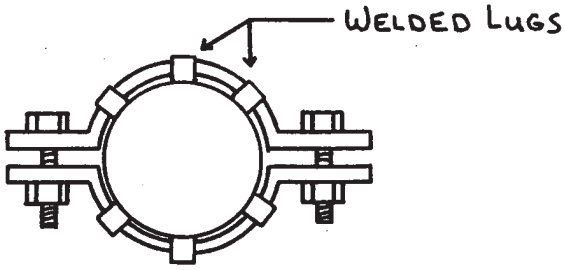

5/8" GAP BETWEEN SHEAR LUGS AND OUTSIDE OF CLAMP PREVENTS INSPECTION

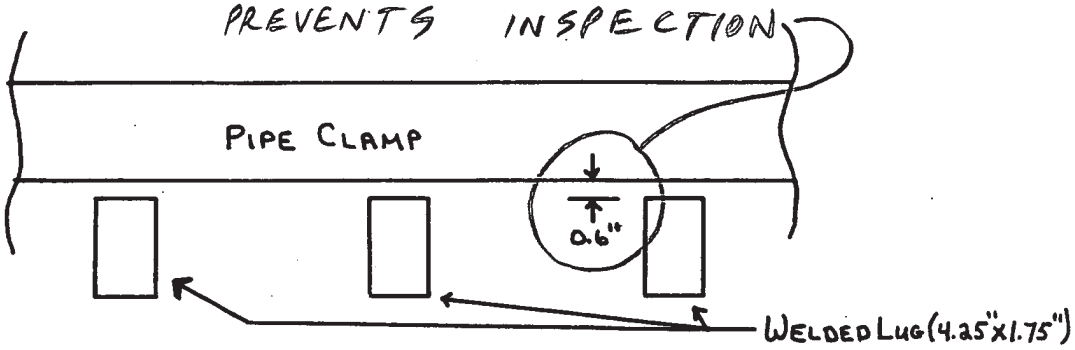

PIPE CLAMP PREVENTS EXAMINATION OF 6 WELDED 4.25"x 1.75" LUGS FOR 0.5" OF BASE METAL ON 5 SIDE OF EACH LUG. ALL LUGS ARE WELDED ON 4 SIDES.

[illegible] 5/27/92
SITE NDE LEVEL III

APS/HSB 5/28/92

F49077

WESTINGHOUSE NUCLEAR SERVICE DIVISION
INSPECTION SERVICES

LIMITATION TO EXAMINATION

PLANT INDIAN POINT UNIT No. 3 SKETCH INT-2-2300

SYST/COMP LOOP 33, 28" LINE 3 MAINSTEAM PROCEDURE INT-151-70 REV. 0

EXAMINER Robert H Cline LEVEL II DATE 3/28/89

RELATED TO: U/T ____ P/T ____ M/T ✓ V/T ____ ITEM(S): HMS-9

PROVIDE GENERAL INFORMATION TO DESCRIBE APPROXIMATE SIZE, LOCATION AND TYPE OF LIMITATION.

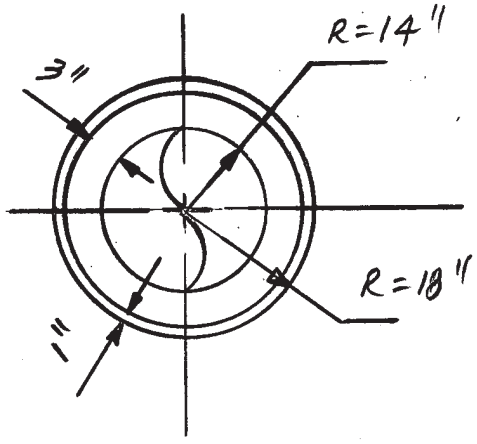

THE 3" DIMENSION FROM THE OUTSIDE OF THE PIPE TO THE INSIDE OF THE 36" O.D. RING DOES NOT PERMIT ACCESS IN THE PERPENDICULAR DIRECTION.

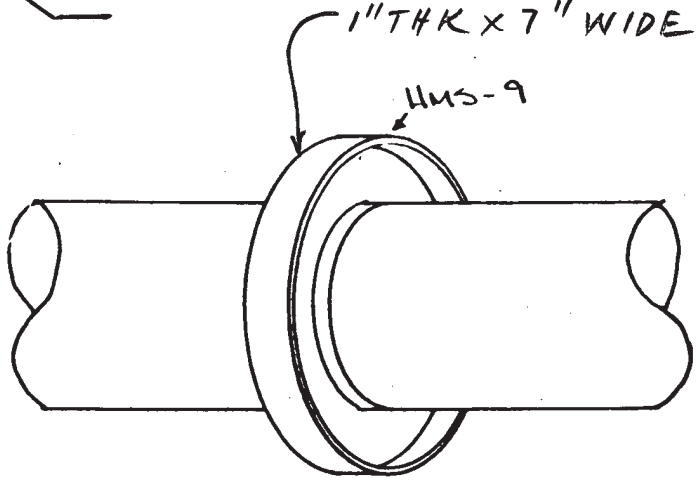

WELDED SUPPORT CONFIGURATION PREVENTS ACCESS FOR PERPENDICULAR DIRECTION EXAM.
EXAMINED IN PARALLEL DIRECTION ONLY.
NOTE: SUPPORT IS WELDED ON BOTH SIDES

F49077

WESTINGHOUSE NUCLEAR SERVICE DIVISION
INSPECTION SERVICES

LIMITATION TO EXAMINATION

PLANT INDIAN POINT UNIT No. 3 SKETCH INT-2-2300 REV. 6

SYST/COMP LOOP 33 LINE 3 28" MAINSTEAM PROCEDURE INT-ISI-70 REV. 1

EXAMINER [signature] LEVEL II [signature] DATE 5-23-92

RELATED TO: U/T ____ P/T ____ M/T X V/T ____ ITEM(S): HMS-12

PROVIDE GENERAL INFORMATION TO DESCRIBE APPROXIMATE SIZE, LOCATION AND TYPE OF LIMITATION.

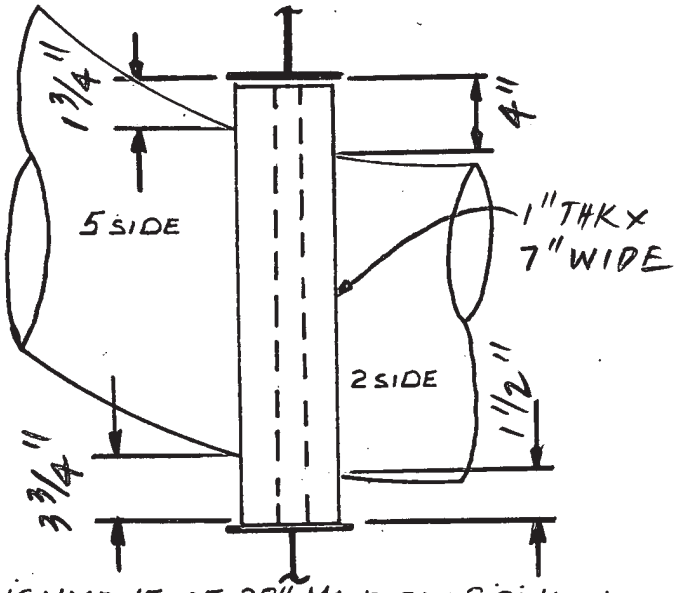

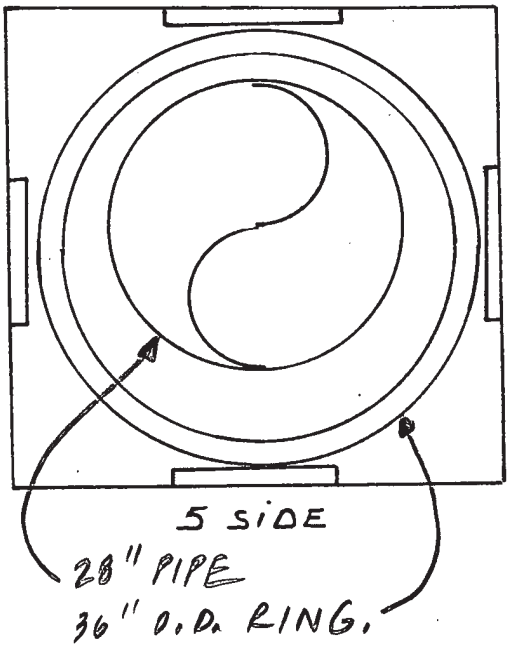

ALIGNMENT OF 28" MAINSTEAM PIPING IN INTEGRALLY WELDED ATTACHMENT HMS-12 RESTRICTS EXAMINATION AS NOTED BELOW

2 SIDE: FROM 21" CLOCKWISE TO 47" CLOCKWISE NO EXAMINATION WAS PERFORMED.

5 SIDE: FROM 62" CLOCKWISE TO 66" CLOCKWISE EXAMINATION WAS LIMITED TO ONE DIRECTION ONLY FROM 66" CLOCKWISE TO 13" CLOCKWISE NO EXAMINATION WAS PERFORMED.

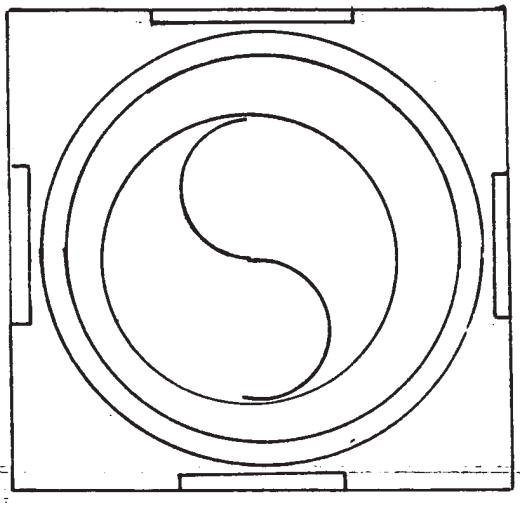

2 SIDE

DUE TO THE EXISTING STEEL FRAME AND THE SLOPE OF THE MAIN STEAM P. THROUGH THAT FRAME TOTAL INSPECTION COULD NOT BE DONE,

[signature] 6/4/92
SITE NDE LEVEL III

APS/HSB 5/28/92

F49077

WESTINGHOUSE NUCLEAR SERVICE DIVISION
INSPECTION SERVICES

LIMITATION TO EXAMINATION

PLANT INDIAN POINT UNIT NO. 3 SKETCH INT-Z-2302

SYST/COMP LOOP 33 18" LINE 7 FEEDWATER PROCEDURE INT-151-70 REV. 0

EXAMINER Robert H Clune LEVEL II DATE 4/6/89

RELATED TO: U/T ____ P/T ____ M/T ✓ V/T ____ ITEM(S): HBF-16, HBF 15

PROVIDE GENERAL INFORMATION TO DESCRIBE APPROXIMATE SIZE, LOCATION AND TYPE OF LIMITATION.

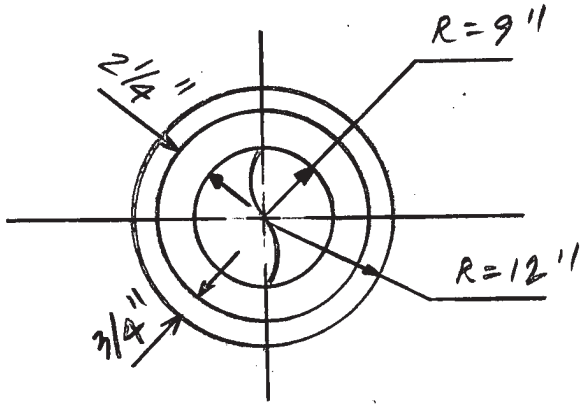

THE 2 1/4" DIM. FROM THE OUTSIDE OF PIPE TO THE INSIDE OF THE 24" OD RING DOES NOT PERMIT ACCESS IN THE PERPENDICULAR DIRECTION.

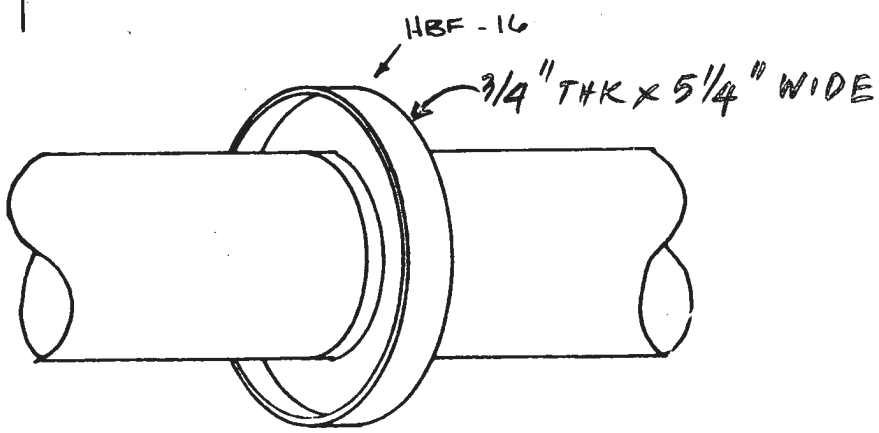

WELDED SUPPORT CONFIGURATION PREVENTS ACCESS FOR PERPENDICULAR DIRECTION EXAM.
EXAMINED IN PARALLEL DIRECTION ONLY
NOTE: SUPPORT IS WELDED ON BOTH SIDES

APS/HSB 5/24/89

F49077

4/6

WESTINGHOUSE NUCLEAR SERVICE DIVISION
INSPECTION SERVICES

LIMITATION TO EXAMINATION

PLANT INDIAN POINT UNIT NO. 3 SKETCH INT-2-2400

SYST/COMP LOOP 3H 28" LINE 4 MAINSTEAM PROCEDURE INT-151-70 REV. 0

EXAMINER Robert H Cline LEVEL II DATE 3/28/89

RELATED TO: U/T ____ P/T ____ M/T ✓ V/T ____ ITEM(S): HMS-9

PROVIDE GENERAL INFORMATION TO DESCRIBE APPROXIMATE SIZE, LOCATION AND TYPE OF LIMITATION.

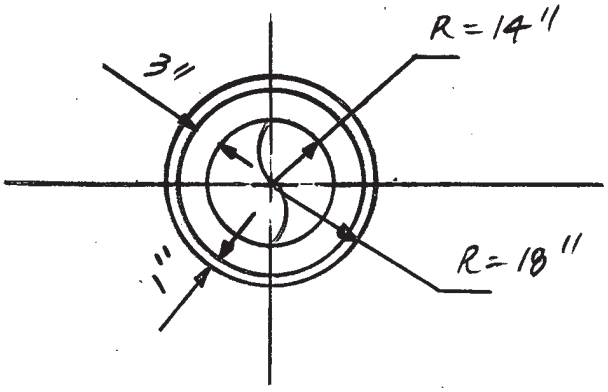

THE 3" DIMENSION FROM THE OUTSIDE OF THE PIPE TO THE INSIDE OF THE 36" O.D. RING DOES NOT PERMIT ACCESS IN THE PERPENDICULAR DIRECTION,

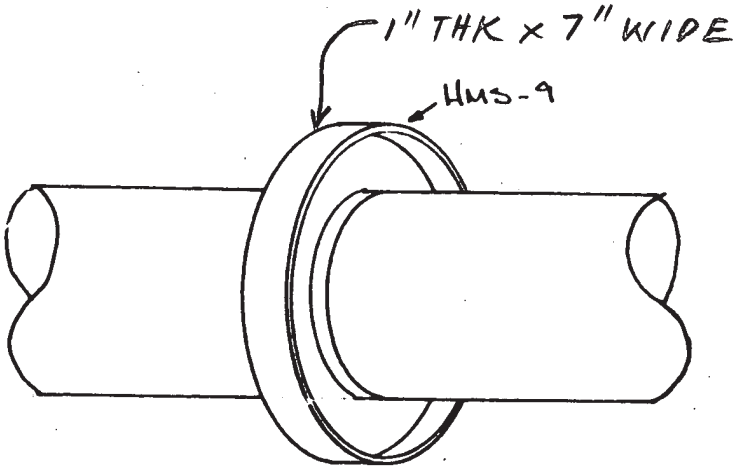

WELDED SUPPORT CONFIGURATION PREVENTS ACCESS FOR PERPENDICULAR DIRECTION EXAM.
EXAMINED IN PARALLEL DIRECTION ONLY.
NOTE: SUPPORT IS WELDED ON BOTH SIDES

PHB/HSB 5/29/89

F49077

434

WESTINGHOUSE NUCLEAR SERVICE DIVISION
INSPECTION SERVICES

LIMITATION TO EXAMINATION

PLANT INDIAN POINT UNIT NO. 3 SKETCH INT-2-2402

SYST/COMP 18" FEEDWATER LOOP 3H LINE 8 PROCEDURE INT-151-70 REV. 0

EXAMINER Robert H Cline LEVEL II DATE 3/30/89

RELATED TO: U/T ____ P/T ____ M/T ✓ V/T ____ ITEM(S): HBF-13

PROVIDE GENERAL INFORMATION TO DESCRIBE APPROXIMATE SIZE, LOCATION AND TYPE OF LIMITATION.

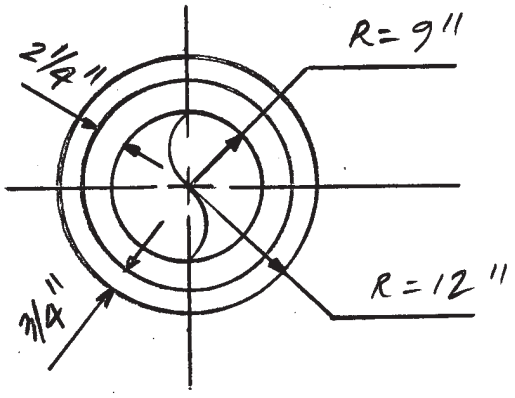

THE 2 1/4" DIM. FROM THE OUTSIDE OF PIPE TO THE INSIDE OF THE 24" O.D. RING DOES NOT PERMIT ACCESS IN THE PERPENDICULAR DIRECTION.

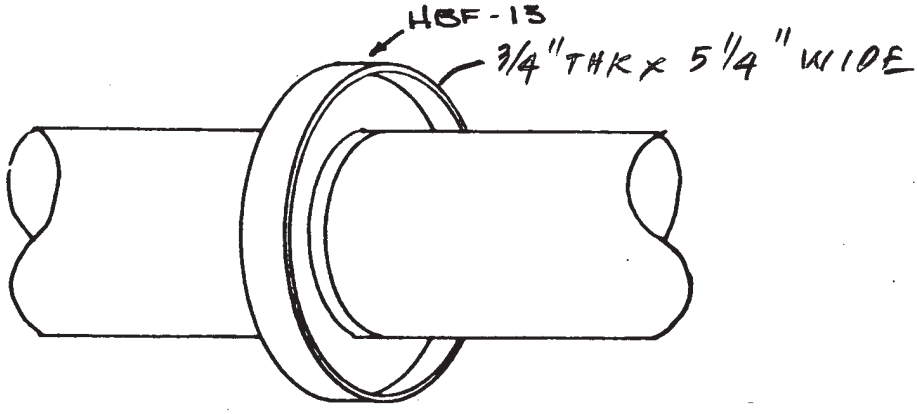

WELDED SUPPORT CONFIGURATION PREVENTS ACCESS FOR PERPENDICULAR DIRECTION EXAM.
EXAMINED IN PARALLEL DIRECTION ONLY
NOTE: SUPPORT IS WELDED ON BOTH SIDES.

APS/HSB 5/24/89

F49077

0.5/4

WESTINGHOUSE NUCLEAR SERVICE DIVISION
INSPECTION SERVICES

LIMITATION TO EXAMINATION

PLANT INDIAN POINT UNIT NO. 3 SKETCH INT-2-2402

SYST/COMP LOOP 34 18" LINE 8 FEEDWATER PROCEDURE INT-151-70 REV. 0

EXAMINER Robert H Cline LEVEL II DATE 4/6/89

RELATED TO: U/T ____ P/T ____ M/T ✓ V/T ____ ITEM(S): HBF-16

PROVIDE GENERAL INFORMATION TO DESCRIBE APPROXIMATE SIZE, LOCATION AND TYPE OF LIMITATION.

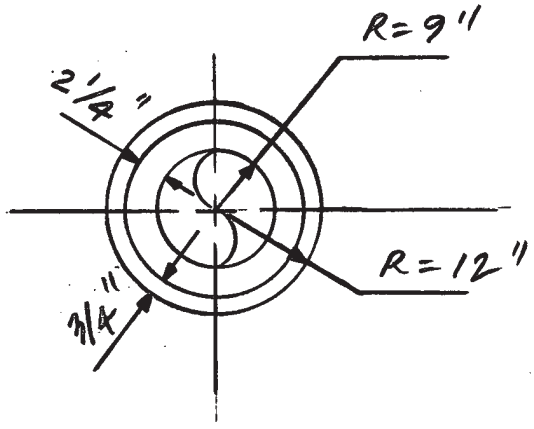

THE 2 1/4" DIM FROM THE OUTSIDE OF THE PIPE TO THE INSIDE OF THE 24" O.D. RING DOES NOT PERMIT ACCESS IN THE PERPENDICULAR DIRECTION.

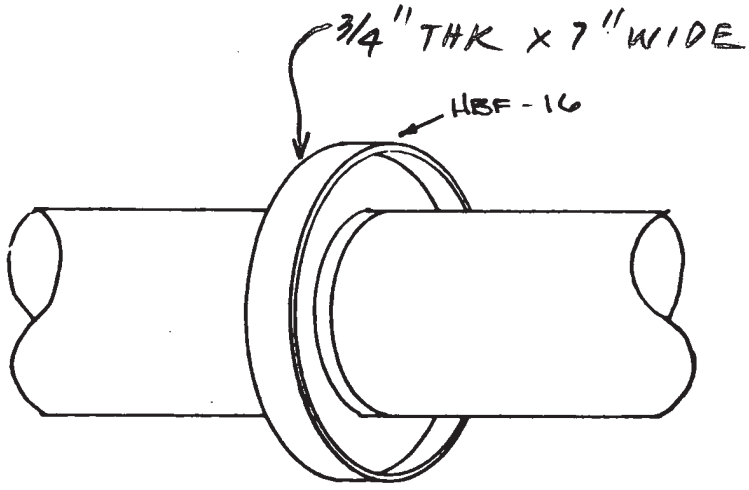

WELDED SUPPORT CONFIGURATION PREVENTS ACCESS FOR PERPENDICULAR DIRECTION EXAM
EXAMINED IN PARALLEL DIRECTION ONLY
NOTE: SUPPORT IS WELDED ON BOTH SIDES

APS/HSB 5/24/89

F49077

ATTACHMENT 7

TABLE NO. 4
RELIEF REQUEST NO. 6

NEW YORK POWER AUTHORITY
INDIAN POINT UNIT NO. 3
INSERVICE INSPECTION PROGRAM
2ND INTERVAL AUGUST 30, 1986 THRU AUGUST 30, 1996

SECTION XI EDITION:	1983 THRU SUMMER 1983 ADDENDA
COMPONENT:	Reactor Vessel RCPCR-V1 Nozzle to Safe End Butt Welds (8)
CODE CLASS:	1
CODE TABLE:	IWB-2500-1
CODE CATEGORY:	B-F
CODE ITEM NO.:	B5.10
EXAMINATION REQUIREMENT:	Volumetric and Surface examination of 100% of Code Required Area per IWB-2500-8
BASIS FOR RELIEF:	The only access to the Reactor Vessel Nozzle to Safe End Butt Weld outside surfaces is through removable plugs in the primary shield. These plugs are located above the nozzle safe ends and are removable through the refueling cavity floor. With the plugs removed, the top insulated surfaces (approximately 25%) of the nozzle safe ends are visible, however the fixed insulation, designed as non removable, the limited space between the nozzle and cavity wall, and expected high radiation levels preclude surface examinations.
ALTERNATIVE EXAMINATION:	The Reactor Vessel Nozzle to Safe End Butt Welds will have an ultrasonic examination performed on both the inner 1/3 of the weld volume and on the outside surface of the weld in lieu of the code required ultrasonic examination of the inner 1/3 of the weld volume and surface examination of the outside surface of the weld. The Westinghouse remote reactor vessel tool used to perform these examinations has been demonstrated to be capable of detecting OD flaws as small as 8% . It should be noted that cracks almost always begin at the inside surface of the weld not the outside, therefore, the surface examination is a conservative measure and the volumetric examination of the inner 1/3 of the weld volume is where flaws are more likely to be found. Public health and safety will not be endangered by allowing the proposed examination to be performed in lieu of the code requirements.

TABLE NO. 4
RELIEF REQUEST NO. 9

NEW YORK POWER AUTHORITY
INDIAN POINT UNIT NO. 3
INSERVICE INSPECTION PROGRAM
2ND INTERVAL AUGUST 30, 1986 THRU AUGUST 30, 1996

SECTION XI EDITION:	1983 THRU SUMMER 1983 ADDENDA
COMPONENT:	Pressurizer RCPPCR1 Nozzle Inside Radius Sections (6)
CODE CLASS:	1
CODE TABLE:	IWB-2500-1
CODE CATEGORY:	B-D
CODE ITEM NO.:	B3.120
EXAMINATION REQUIREMENT:	Volumetric examination of 100% of Code Required Area per IWB-2500-7
BASIS FOR RELIEF:	The nozzles on the pressurizer upper and lower head are cast with the vessel head. The as cast surface of the heads, combined with the geometry of this area effectively preclude ultrasonic examination of the nozzle inner radii. The geometry and size of the nozzles are such that a radiographic examination is not feasible. Specifically, the radiographic test film cannot be situated properly from the ID due to lack of interior structure to work from. Placement of the source will not allow proper film to source distance, resulting in geometric unsharpness.
ALTERNATIVE EXAMINATION:	Remote visual examinations will be performed on all pressurizer nozzles except the pressurizer surge nozzle which has a retaining basket covering the outlet of the pressurizer surge nozzle. Also visual examination for evidence of leakage will be performed during system leakage and system hydrostatic tests per Section XI, Code Items B15.20 and B15.21. Public health and safety will not be endangered by allowing the proposed examination to be performed in lieu of the code requirements.

TABLE NO. 4
RELIEF REQUEST NO. 10

NEW YORK POWER AUTHORITY
INDIAN POINT UNIT NO. 3
INSERVICE INSPECTION PROGRAM
2ND INTERVAL AUGUST 30, 1986 THRU AUGUST 30, 1996

SECTION XI EDITION:	1983 THRU SUMMER 1983 ADDENDA
COMPONENT:	Reactor Coolant Pipe Circumferential Welds (8)
CODE CLASS:	1
CODE TABLE:	IWB-2500-1
CODE CATEGORY:	B-J
CODE ITEM NO.:	B9.11
EXAMINATION REQUIREMENT:	Volumetric and Surface examination of 100% of Code Required Area per IWB-2500-8
BASIS FOR RELIEF:	The only access to the first Reactor Coolant Pipe Circumferential Weld off the Hotleg and Coldleg at the Reactor Vessel from the outside surfaces is through removable plugs in the primary shield. These plugs are located above the Reactor Coolant Pipe Circumferential weld and are removable through the refueling cavity floor. With the plugs removed, the top insulated surfaces (approximately 25%) of the Circumferential Welds are visible, however the fixed insulation, designed as non removable, the limited space between the Reactor Coolant Pipe and cavity wall and expected high radiation levels preclude surface examinations.
ALTERNATIVE EXAMINATION:	The first Reactor Coolant Pipe Circumferential Weld off the Hotleg and Coldleg at the Reactor Vessel will have an ultrasonic examination performed on both the inner 1/3 of the weld volume and on the outside surface of the weld in lieu of the code required ultrasonic examination of the inner 1/3 of the weld volume and surface examination of the outside surface of the weld. The Westinghouse remote reactor vessel tool used to perform these examinations has been demonstrated to be capable of detecting OD flaws as small as 8%. It should be noted that cracks almost always begin at the inside surface of the weld not the outside, therefore, the surface examination is a conservative measure and the volumetric examination of the inner 1/3 of the weld volume is where flaws are more likely to be found. Public health and safety will not be endangered by allowing the proposed examination to be performed in lieu of the code requirements.

TABLE NO. 4
RELIEF REQUEST NO. 15

NEW YORK POWER AUTHORITY
INDIAN POINT UNIT NO. 3
INSERVICE INSPECTION PROGRAM
2ND INTERVAL AUGUST 30, 1986 THRU AUGUST 30, 1996

SECTION XI EDITION:	1983 THRU SUMMER 1983 ADDENDA
COMPONENT:	Class 2 Component Welds
CODE CLASS:	2
CODE TABLE:	IWC-2500-1
CODE CATEGORY:	C-A
CODE ITEM NO.:	C1.10
EXAMINATION REQUIREMENT:	Volumetric examination of 100% of Code Required Area per IWC-2500-1
BASIS FOR RELIEF:	Limitations may occur for the examination of Class 2 Component Welds when the welds occur at geometric discontinuities such as pipe to vessel welds, pipe to valve or flange welds, elbow intrados or extrados or vessel to flange welds. Limitations may also occur from welded pads, welded support lugs, welded name plates or component configurations.
ALTERNATIVE EXAMINATION:	Volumetric examinations will be performed to the maximum extent possible. A surface examination will be performed on all examination areas where less than 50 percent volumetric coverage is achieved to assure the mechanical and structural condition and structural integrity of the examination area. Where limitations restrict examination of 100% of the code required area the limitation will be documented on the data sheet for the area examined and a limitation to examination form describing approximate size, location and type of limitation. Public health and safety will not be endangered by allowing the proposed examination to be performed in lieu of the code requirements.

TABLE NO. 4
RELIEF REQUEST NO. 26

NEW YORK POWER AUTHORITY
INDIAN POINT UNIT NO. 3
INSERVICE INSPECTION PROGRAM
2ND INTERVAL AUGUST 30, 1986 THRU AUGUST 30, 1996

SECTION XI EDITION:	1983 THRU SUMMER 1983 ADDENDA
COMPONENT:	Class 2 Component Welds
CODE CLASS:	2
CODE TABLE:	IWC-2500-1
CODE CATEGORY:	C-A
CODE ITEM NO.:	C1.20
EXAMINATION REQUIREMENT:	Volumetric examination of 100% of Code Required Area per IWC-2500-1
BASIS FOR RELIEF:	Limitations may occur for the examination of Class 2 Component Welds when the welds occur at geometric discontinuities such as pipe to vessel welds, pipe to valve or flange welds, elbow intrados or extrados or vessel to flange welds. Limitations may also occur from welded pads, welded support lugs, welded name plates or component configurations.
ALTERNATIVE EXAMINATION:	Volumetric examinations will be performed to the maximum extent possible. A surface examination will be performed on all examination areas where less than 50 percent volumetric coverage is achieved to assure the mechanical and structural condition and structural integrity of the examination area. Where limitations restrict examination of 100% of the code required area the limitation will be documented on the data sheet for the area examined and a limitation to examination form describing approximate size, location and type of limitation. Public health and safety will not be endangered by allowing the proposed examination to be performed in lieu of the code requirements.

TABLE NO. 4
RELIEF REQUEST NO. 28

NEW YORK POWER AUTHORITY
INDIAN POINT UNIT NO. 3
INSERVICE INSPECTION PROGRAM
2ND INTERVAL AUGUST 30, 1986 THRU AUGUST 30, 1996

SECTION XI EDITION:	1983 THRU SUMMER 1983 ADDENDA
COMPONENT:	Class 2 Integrally Welded Attachments
CODE CLASS:	2
CODE TABLE:	IWC-2500-1
CODE CATEGORY:	C-C
CODE ITEM NO.:	C3.20
EXAMINATION REQUIREMENT:	Surface examination of 100% of Code Required Area per IWC-2500-5
BASIS FOR RELIEF:	Limitations may occur for the examination of Class 2 Integrally Welded Attachments due to physical constraints or limitations.
ALTERNATIVE EXAMINATION:	Surface examinations will be performed to the maximum extent possible. A VT-3 Visual examination will be performed on all supports to assure the mechanical and structural condition and structural integrity of the integrally welded attachment. Where limitations restrict examination of 100% of the code required area the limitation will be documented on the data sheet for the support examined and a limitation to examination form describing approximate size, location and type of limitation. Public health and safety will not be endangered by allowing the proposed examination to be performed in lieu of the code requirements.