Westinghouse

Westinghouse Electric Company
Nuclear Power Plants
P.O. Box 355
Pittsburgh, Pennsylvania 15230-0355
USA

U.S. Nuclear Regulatory Commission
ATTENTION: Document Control Desk
Washington, D.C. 20555

Direct tel: 412-374-6206
Direct fax: 724-940-8505
e-mail: sisk1rb@westinghouse.com

Your ref: Docket No. 52-006
Our ref: DCP_NRC_002757

January 29, 2010

Subject: AP1000 Response to Request for Additional Information (SRP 6)

Westinghouse is submitting a response to the NRC request for additional information (RAI) on SRP Section 6. This RAI response is submitted in support of the AP1000 Design Certification Amendment Application (Docket No. 52-006). The information included in this response is generic and is expected to apply to all COL applications referencing the AP1000 Design Certification and the AP1000 Design Certification Amendment Application.

Enclosure 1 provides the response for the following RAI(s):

RAI-SRP6.4-SPCV-13 R1

Questions or requests for additional information related to the content and preparation of this response should be directed to Westinghouse. Please send copies of such questions or requests to the prospective applicants for combined licenses referencing the AP1000 Design Certification. A representative for each applicant is included on the cc: list of this letter.

Very truly yours,

D. A. Lindgren / FOR

Robert Sisk, Manager
Licensing and Customer Interface
Regulatory Affairs and Standardization

/Enclosure

1. Response to Request for Additional Information on SRP Section 6

D063

NRO

cc:	D. Jaffe	-	U.S. NRC	1E
	E. McKenna	-	U.S. NRC	1E
	P. Donnelly	-	U.S. NRC	1E
	T. Spink	-	TVA	1E
	P. Hastings	-	Duke Power	1E
	R. Kitchen	-	Progress Energy	1E
	A. Monroe	-	SCANA	1E
	P. Jacobs	-	Florida Power & Light	1E
	C. Pierce	-	Southern Company	1E
	E. Schmiech	-	Westinghouse	1E
	G. Zinke	-	NuStart/Entergy	1E
	R. Grumbir	-	NuStart	1E
	D. Lindgren	-	Westinghouse	1E

ENCLOSURE 1

Response to Request for Additional Information on SRP Section 6

AP1000 TECHNICAL REPORT REVIEW

Response to Request For Additional Information (RAI)

RAI Response Number: RAI-SRP6.4-SPCV-13
Revision: 1

Question:

ANSI/ANS-51.1-1983 subsection 3.2.1.c states that "fluid systems required to support, directly or indirectly, the three nuclear safety functions stated above shall be capable of performing their nuclear safety functions as provided in American National Standard Single Failure Criteria for light Water Reactor Safety-Related Fluid Systems, ANSI/ANS-58.9-1981.

ANSI/ANS-58.9-1981 defines passive failure as "a failure of a component to maintain its structural integrity or the blockage of a process flow path". In this standard the term refers to a random failure and its consequential effects assumed in addition to an initiating event and its consequential effects for the purpose of safety-relayed fluid system design and analysis. This standard defines rules for application of the Single Failure Criteria as:

During short term, the single failure considered may be limited to an active failure.

During long term, assuming no prior failure during short term, the limiting single failure considered can be either active or passive.

Long term is defined as that period of safety-related fluid system operation following the short term, during which the safety function of the system is required. Short term is defined as that period of operation up to 24 hours following an initiating event.

Additionally, TSTF-448 Revision 3 both "MCREC system" Technical Specifications section and "CRFA system" Technical Specifications section have the following statement:

"No single active or passive failure will cause the loss of outside or re-circulated air from the CRE."

The VES passive filtration line is required to meet single failure criteria. The single active or passive failure of a component in the VES passive filtration line, assuming a loss of outside power, shall not impair the ability of the system to perform its design function. If the present passive filtration design proposed by applicant has a passive failure, e.g., the nozzle section of the eductor fails to induce the minimum 600 cfm, the safety function of the filtration may not be achievable. The proposed VES passive filtration line does not have independent, redundant trains to re-circulate and filter the CRE. Therefore, it does not appear to meet the single failure criteria.

The applicant needs to provide a justification that the described system meets the single failure criteria or to provide a redundant filter train.

Westinghouse Response (Revision 1):
Based on a teleconference discussion with the staff on 1/8/2010, Westinghouse is revising this response to incorporate a bypass line for the eductor. This is to provide operators with the ability to deliver the air flow from the emergency air storage tanks following the highly unlikely passive single failure of the eductor. The design addition adds a flow control orifice and normally closed manual valve to allow the 65 scfm of breathable air to flow into the MCR without passing through the eductor. Also, a normally open manual valve upstream from the eductor is added to provide full isolation of the flowpath to the eductor. Because the flow from the emergency air storage tanks is controlled by a critical flow orifice in the eductor and in the bypass line, the upstream flow control orifices (R01A/B) are no longer needed and are deleted from the system. The critical flow orifices in the eductor and in the bypass line provide protection against a fail-open condition of the pressure regulating valve. If the second-stage of the pressure regulating were to fail-open only the first-stage would be regulating the downstream pressure. The system downstream would briefly experience an increase in pressure. While the operator takes action to put the redundant air supply line into service, the orifices in the eductor or bypass line restrict the flow to prevent any damage on the downstream components. A description of the eductor bypass capability is added to DCD Section 6.4.4 and DCD Figure 6.4-2 (Sheet 2 of 2) is changed to reflect the additional valves, new flow control orifice, and deleted flow control orifice. Also, other areas of the DCD that are impacted by this change are attached as well, see page 4 for a total list of the impacted sections.

Westinghouse Response (Revision 0):
The primary components that comprise the main control room habitability system (VES) passive filtration line are duct work, two silencers, an eductor, and a filtration unit. The passive filtration line has no active components. The only active components in the VES are in the air delivery portion of the system that provides the motive flow to induce to the filtration flow. The air delivery portion of the system also provides breathable air for main control room occupants during abnormal scenarios. In the air delivery portion of the system, there are redundant flow paths. The redundant flow paths prevent a single active or passive failure from impairing the ability of the system to perform its design function. Based on the guidance in SECY-77-439 (Reference 1), the passive filtration portion of the system must be evaluated for a credible passive failure 24 hours after the start of an event. SECY-77-439 defines a passive failure as events such as a line blockage or structural failure of a static component that limits the effectiveness of the component. Though a passive failure in the passive filtration portion of the VES is highly unlikely, it would not impair main control room habitability. Dose analysis for the AP1000 main control room was performed to verify that in the event of a passive failure in the passive filtration portion of the VES 24 hours after the initiation of the event operator doses would remain below 5 rem TEDE. The limiting AP1000 main control room dose scenarios were evaluated for a loss of filtration flow 24 hours into an accident. These scenarios are limiting since they involve a release 24 hours after the initiation of the event. The analysis showed the following acceptable increases in dose rates compared to the scenarios when filtration is available for 72 hours. Therefore, the passive filtration portion of the VES can sustain a single passive failure without impairing main control room habitability for the first 72 hours following a design basis accident.

Comparison of Limiting VES Operating Cases		
Scenario	*VES Filtration Operating for 72 Hours*	*VES Filtration Operating for 24 Hours*
Large Break LOCA	4.41 rem TEDE	4.41 rem TEDE
Steam Line Break (pre-existing iodine spike)	3.9 rem TEDE	3.91 rem TEDE
Steam Line Break (Accident initiated iodine spike)	4.0 rem TEDE	4.41 rem TEDE

A markup of Section 6.4.4 of the AP1000 DCD is provided below to reflect that the passive filtration line can sustain a single failure in accordance with SECY-77-439 without impairing main control room habitability for the first 72 hours following a design basis accident. The finalized supporting calculations for the dose rates identified above and in the markup to Section 6.4.4 of the DCD are still in the process of being formally updated. The dose rates listed above are the results of detailed scoping analysis. If the results in the final calculations are different, Westinghouse will revise this response to identify the change. No significant change is expected from the formalized calculations.

The VES emergency air storage tanks are still required to provide 65 +/- 5 cfm of breathable air to the main control room envelope for 72 hours during a design basis accident when VES is in operation. There are redundant active components in the flow path that are capable of providing the breathable air from the emergency air storage tanks to the main control room envelope. The two air delivery lines converge inside the main control room envelope and connect to the eductor to provide the motive flow to induce the filtration flow. A safety related instrument monitors the air flow from the emergency air storage tanks to verify that adequate air flow is being delivered to the main control room envelope. The configuration of this portion of the system is identical to the VES design certified in Revision 15 of the AP1000 DCD. The air in the VES emergency air storage tanks is provided through the high pressure air portion of the Compressed Air System (CAS). The compressor package that provides the air to the emergency air storage tanks contains a filtration package and an air purifier/dryer to maintain moisture free breathable air meeting the requirements of ANSI/CGA G7.1 commodity specification for Air Class E. There is no source that could create line blockage in the VES line from the air bottles to the eductor. A simplified schematic of the AP1000 eductor is shown below. If blockage were to occur downstream of the eductor in the filtration line after 24 hours, it would be expected that complete blockage of the filtration line would not occur. In this scenario, the blockage would increase the backpressure in the filtration line, which would reduce the total filtration flow. However, if by some mechanism, complete line blockage were to occur, the breathable air from the VES emergency air storage tanks would still be delivered to the main control room envelope. The breathable air would flow through the intake of the filtration line into the main control room envelope.

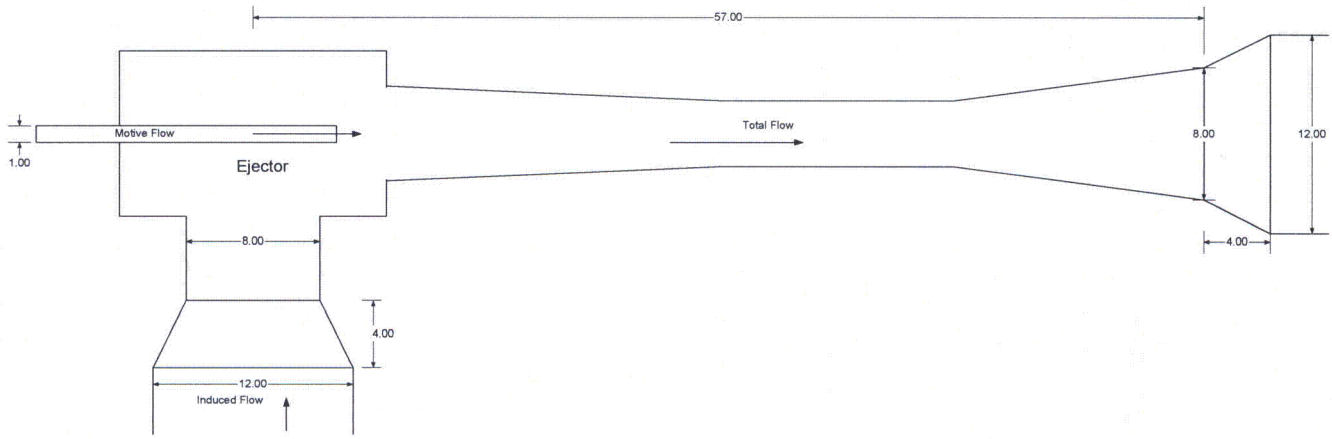

In addition to the DCD markup to address passive failures, reference to the Westinghouse test report for the passive filtration line has been added to the DCD as discussed on the conference call with the NRC on December 8, 2009. The reference to the test report was added to the system general description in Section 6.4.2.2 of the DCD.

References:

1. SECY-77-439

Design Control Document (DCD) Revision: (Revision 0, 1)

Update the following portions of the DCD as shown:

Tier 1:

1. Table 2.2.5-1 (Update table)
2. Figure 2.2.5-1 (replace figure)

Tier 2:

1. Table 3.2-3 (Update table)
2. Table 3.9-12 (Update table)
3. Table 3.9-16 (Update table)
4. Table 3.11-1 (Update table)
5. Section 6.4.2.2
6. Section 6.4.2.3

7. Section 6.4.4
8. Section 6.4.8
9. Figure 6.4-2 (Sheet 2 of 2) (replace figure)

Table 2.2.5-1 (cont.)									
Equipment Name	**Tag No.**	**ASME Code Section III**	**Seismic Cat. I**	**Remotely Operated Valve**	**Class 1E/ Qual. for Harsh Envir.**	**Safety-Related Display**	**Control PMS**	**Active Function**	**Loss of Motive Power Position**
Emergency Air Storage Tank 32	VES-MT-32	No	Yes	-	-/-	-	-	-	-
Air Delivery Alternate Isolation Valve	VES-PL-V001	Yes	Yes	No	-/-	No	-	Transfer Open	-
Eductor Flowpath Isolation Valve	VES-PL-V045	Yes	Yes	No	-/-	No	-	Transfer Close	-
Eductor Bypass Isolation Valve	VES-PL-V046	Yes	Yes	No	-/-	No	-	Transfer Open	-
Pressure Regulating Valve A	VES-PL-V002A	Yes	Yes	No	-/-	No	-	Throttle Flow	-
Pressure Regulating Valve B	VES-PL-V002B	Yes	Yes	No	-/-	No	-	Throttle Flow	-
MCR Air Delivery Isolation Valve A	VES-PL-V005A	Yes	Yes	Yes	Yes/No	No	Yes	Transfer Open	Open
MCR Air Delivery Isolation Valve B	VES-PL-V005B	Yes	Yes	Yes	Yes/No	No	Yes	Transfer Open	Open

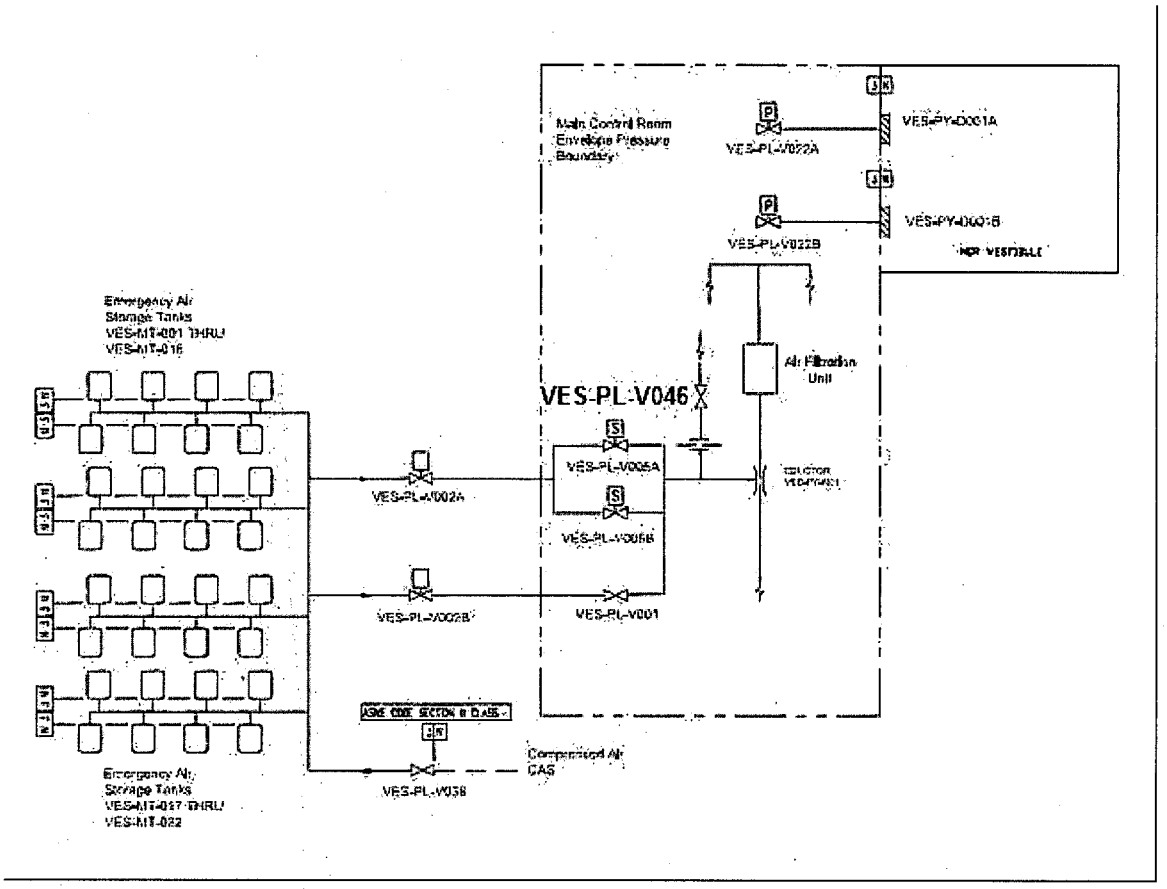
Main Control Room Envelope Pressure Boundary
VES-PL-V022A
VES-PY-D001A
VES-PL-V022B
VES-PY-D001B
Air Filtration Unit
VES-PL-V046
VES-PL-V005A
VES-PL-V005B
VES-PL-V002A
VES-PL-V002B
VES-PL-V001
VES-PL-V038
Compressed Air GAS

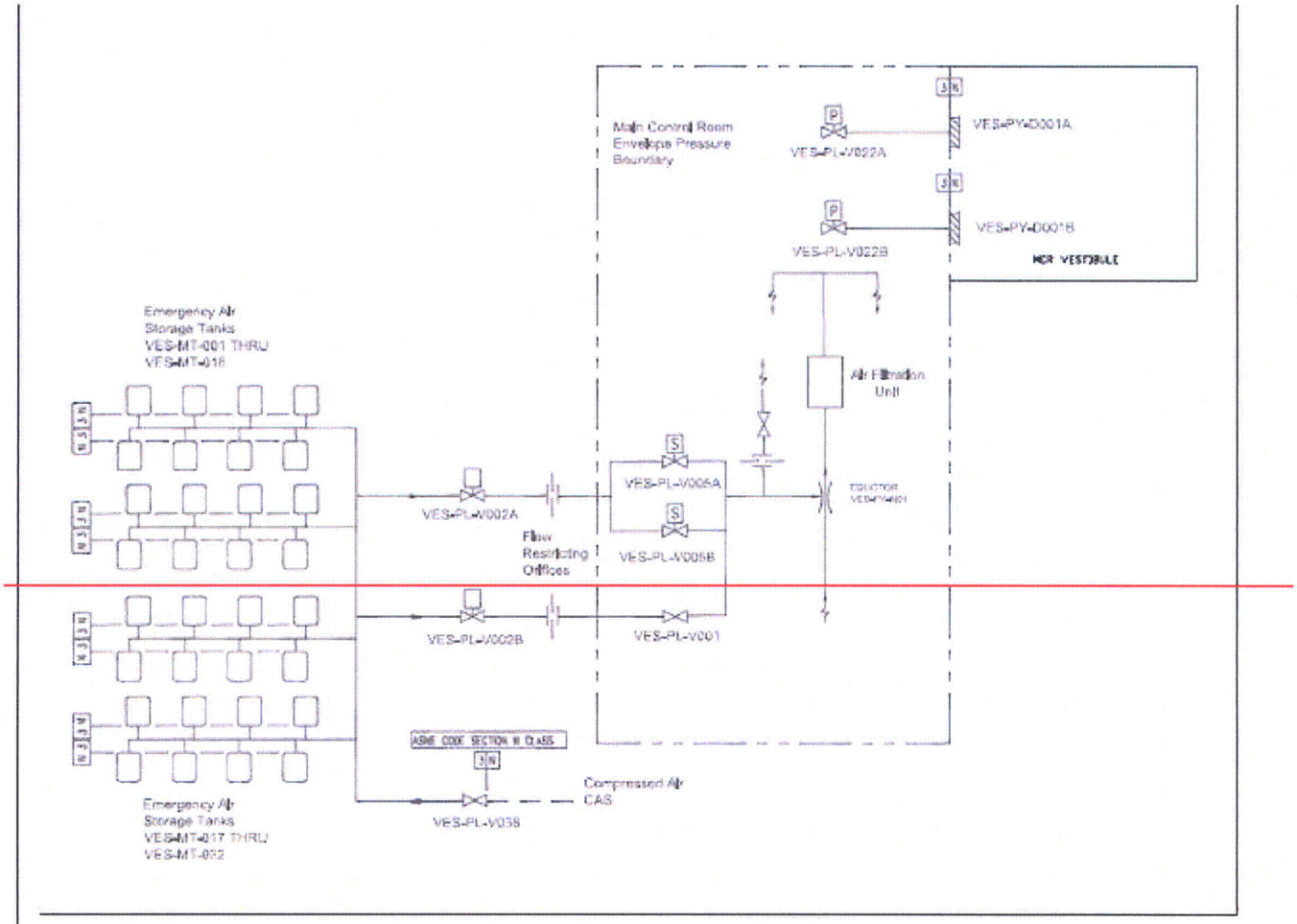

Figure 2.2.5-1
Main Control Room Emergency Habitability System

TABLE 3.2-3 (SHEET 57 OF 65)

AP1000 CLASSIFICATION OF MECHANICAL AND FLUID SYSTEMS, COMPONENTS, AND EQUIPMENT

Tag Number	Description	AP1000 Class	Seismic Category	Principal Construction Code	Comments
Main Control Room Emergency Habitability System (Continued)					
VES-PL-V038	Makeup Air Stop Valve	C	I	ASME III-3	
VES-PL-V040A	Air Tank Safety Relief Valve A	C	I	ASME III-3	
VES-PL-V040B	Air Tank Safety Relief Valve B	C	I	ASME III-3	
VES-PL-V041A	Air Tank Safety Relief Valve A	C	I	ASME III-3	
VES-PL-V041B	Air Tank Safety Relief Valve B	C	I	ASME III-3	
VES-PL-V043A	Differential Pressure Instrument Line Isolation Valve A	C	I	ASME III-3	
VES-PL-V043B	Differential Pressure Instrument Line Isolation Valve B	C	I	ASME III-3	
VES-PL-V044	Main Air Flowpath Isolation Valve	C	I	ASME III-3	
VES-PL-V045	Eductor Flowpath Isolation Valve	C	I	ASME III-3	
VES-PL-V046	Eductor Bypass Isolation Valve	C	I	ASME III-3	
Containment Air Filtration System (VFS)			Location: Auxiliary Building and Annex Building		
VFS-PY-C01	Containment Supply Duct Penetration	B	I	ASME III, 2	
VFS-PY-C02	Containment Exhaust Duct Penetration	B	I	ASME III, 2	
VFS-MY-Y01	Containment Air Supply Debris Screen	C	I	ASME Sec. III Class 3	
VFS-MY-Y02	Containment Air Exhaust Debris Screen	C	I	ASME Sec. III Class 3	
VFS-PL-V003	Containment Purge Supply Containment Isolation Valve	B	I	ASME III-2	

Table 3.9-12 (Sheet 6 of 7)

LIST OF ASME CLASS 1, 2, AND 3 ACTIVE VALVES

Valve No.	Description	Function[a]
SGS-PL-V250B	Main Feedwater Control	3,4
SGS-PL-V255A	Startup Feedwater Control	3,4
SGS-PL-V255B	Startup Feedwater Control	3,4
Nuclear Island Nonradioactive Ventilation System		
VBS-PL-V186	MCR Supply Air Isolation Valve	3
VBS-PL-V187	MCR Supply Air Isolation Valve	3
VBS-PL-V188	MCR Return Air Isolation Valve	3
VBS-PL-V189	MCR Return Air Isolation Valve	3
VBS-PL-V190	MCR Exhaust Air Isolation Valve	3
VBS-PL-V191	MCR Exhaust Air Isolation Valve	3
Main Control Room Habitability System		
VES-PL-V001	Air Delivery Alternate Isolation Valve	3
VES-PL-V002A	Pressure Regulating Valve A	3
VES-PL-V002B	Pressure Regulating Valve B	3
VES-PL-V005A	Air Delivery Isolation Valve A	3
VES-PL-V005B	Air Delivery Isolation Valve B	3
VES-PL-V022A	Pressure Relief Isolation Valve A	3
VES-PL-V022B	Pressure Relief Isolation Valve B	3
VES-PL-V040A	Air Tank Safety Relief Valve A	3
VES-PL-V040B	Air Tank Safety Relief Valve B	3
VES-PL-V041A	Air Tank Safety Relief Valve A	3
VES-PL-V041B	Air Tank Safety Relief Valve B	3
VES-PL-V044	Main Air Flow Path Isolation Valve	3
VES-PL-V045	Eductor Flowpath Isolation Valve	3
VES-PL-V046	Eductor Bypass Isolation Valve	3

Table 3.9-16 (Sheet 21 of 23)

VALVE INSERVICE TEST REQUIREMENTS

Valve Tag Number	Description[1]	Valve/Actuator Type	Safety-Related Missions	Safety Functions[2]	ASME Class/ IST Category	Inservice Testing Type and Frequency	IST Notes
VES-PL-V022B	Pressure Relief Isolation Valve B	Remote AO Butterfly	Maintain Open Transfer Open	Active-to-Failed	Class 3 Category B	Remote Position Indication, Exercise/2 Years Exercise Full Stroke/Quarterly Operability Test	31
VES-PL-V040A	Air Tank Safety Relief Valve A	Relief	Maintain Close Transfer Open	Active	Class 3 Category BC	Class 2/3 Relief Valve Tests/10 Years and 20% in 4 Years	
VES-PL-V040B	Air Tank Safety Relief Valve B	Relief	Maintain Close Transfer Open	Active	Class 3 Category BC	Class 2/3 Relief Valve Tests/10 Years and 20% in 4 Years	
VES-PL-V041A	Air Tank Safety Relief Valve A	Relief	Maintain Close Transfer Open	Active	Class 3 Category BC	Class 2/3 Relief Valve Tests/10 Years and 20% in 4 Years	
VES-PL-V041B	Air Tank Safety Relief Valve B	Relief	Maintain Close Transfer Open	Active	Class 3 Category BC	Class 2/3 Relief Valve Tests/10 Years and 20% in 4 Years	
VES-PL-V044	Main Air Flowpath Isolation Valve	Manual	Maintain Open Transfer Close	Active	Class 3 Category B	Exercise Full Stroke/2 Years	37
VES-PL-V045	Eductor Flowpath Isolation Valve	Manual	Maintain Open Transfer Close	Active	Class 3 Category B	Exercise Full Stroke/2 Years	31
VES-PL-V046	Eductor Bypass Isolation Valve	Manual	Maintain Close Transfer Open	Active	Class 3 Category B	Exercise Full Stroke/2 Years	31
VFS-PL-V003	Containment Purge Inlet Containment Isolation Valve	Remote AO Butterfly	Maintain Close Transfer Close	Active-to-Failed Containment Isolation Safety Seat Leakage Remote Position	Class 2 Category A	Remote Position Indication, Exercise/2 Years Containment Isolation Leak Test Exercise Full Stroke/Quarterly Operability Test	27, 31

Table 3.11-1 (Sheet 30 of 50)

ENVIRONMENTALLY QUALIFIED ELECTRICAL AND MECHANICAL EQUIPMENT

Description	AP1000 Tag No.	Envir. Zone (Note 2)	Function (Note 1)	Operating Time Required (Note 5)	Qualification Program (Note 6)
Relief Isolation Valve A	VES-PL-V022A	3	ESF	2 wks	M
Limit Switch	VES-PL-V022A-L	3	PAMS	2 wks	E
Solenoid Valve	VES-PL-V022A-S	3	ESF	2 wks	E
Relief Isolation Valve B	VES-PL-V022B	3	ESF	2 wks	M
Limit Switch	VES-PL-V022B-L	3	PAMS	2 wks	E
Solenoid Valve	VES-PL-V022B-S	3	ESF	2 wks	E
Air Tank Relief A	VES-PL-V040A	7	ESF	2 wks	M
Air Tank Relief B	VES-PL-V040B	7	ESF	2 wks	M
Air Tank Relief A	VES-PL-V041A	7	ESF	2 wks	M
Air Tank Relief B	VES-PL-V041B	7	ESF	2 wks	M
Main Air Flow Path Isolation Valve	VES-PL-V044	3	ESF	2 wks	M
Eductor Flowpath Isolation Valve	VES-PL-V045	3	ESF	2 wks	M
Eductor Bypass Isolation Valve	VES-PL-V046	3	ESF	2 wks	M
Containment Purge Inlet Isolation	VFS-PL-V003	7	ESF	5 min	M S
Limit Switch	VFS-PL-V003-L	7	PAMS	2 wks	E
Solenoid Valve	VFS-PL-V003-S1	7	ESF	5 min	E
Containment Purge Inlet Isolation	VFS-PL-V004	1	ESF	5 min	M *
Limit Switch	VFS-PL-V004-L	1	PAMS	1 yr	E *
Solenoid Valve	VFS-PL-V004-S1	1	ESF	5 min	E *
Containment Purge Discharge Isolation	VFS-PL-V009	1	ESF	5 min	M *
Limit Switch	VFS-PL-V009-L	1	PAMS	1 yr	E *
Solenoid Valve	VFS-PL-V009-S1	1	ESF	5 min	E *
Containment Purge Discharge Isolation	VFS-PL-V010	6	ESF	5 min	M S **
Limit Switch	VFS-PL-V010-L	6	PAMS	2 wks	E **
Solenoid Valve	VFS-PL-V010-S1	6	ESF	5 min	E **

6.4.2.2 General Description

The main control room emergency habitability system air storage tanks are sized to deliver the required air flow to the main control room and induce sufficient air flow through the passive filtration line to meet the ventilation and pressurization requirements for 72 hours based on the performance requirements of subsection 6.4.1.1. Normal system makeup is provided by a connection to the breathable quality air compressor in the compressed and instrument air system (CAS). See subsection 9.3.1 for a description of the CAS. A connection for refilling operation is provided in the CAS.

Flow from the air storage tanks induces a filtration flow of at least 600 cfm. Testing was conducted to validate that the passive filtration line is capable of inducing a filtration flow of at least 600 cfm greater than the design flow rate from the VES emergency air storage tanks. The testing is documented in TR-SEE-III-09-03 (Reference 12). The filtration flow passes through a series of silencers to maintain acceptable main control room noise levels. The passive filtration portion of the system includes a HEPA filter, a charcoal adsorber, and a downstream postfilter. The filters are configured to satisfy the guidelines of Regulatory Guide 1.52 (Reference 10). The air intake to the passive filtration ductwork is located near the operations work area. The ductwork is routed behind the main control area through the operations break room to reduce the overall noise level in the main control area. The filtered air supply is then distributed to three supply locations that are sufficiently separated from the air intake to avoid short circuiting of the air flow. Two of the supply locations are located inside the main control area. Flow dampers ensure the filtered air is properly distributed throughout the main control room envelope.

The function of providing passive heat sinks for the main control room, instrumentation and control rooms, and dc equipment rooms is part of the main control room emergency habitability system. The heat sinks for each room are designed to limit the temperature rise inside each room during the 72-hour period following a loss of nuclear island nonradioactive ventilation system operation. The heat sinks consist primarily of the thermal mass of the concrete that makes up the ceilings and walls of these rooms.

To enhance the heat-absorbing capability of the ceilings, a metal form is attached to the interior surface of the concrete at selected locations. Metallic plates are attached perpendicular to the form. These plates extend into the room and act as thermal fins to enhance the heat transfer from the room air to the concrete. The specifics of the fin construction for the main control room and I&C room ceilings are described in subsection 3.8.4.1.2.

The normal operating temperatures in the main control room, instrumentation and control rooms, dc equipment rooms, and adjacent rooms are kept within a specified range by the nuclear island nonradioactive ventilation system in order to maintain a design basis initial heat sink capacity of each room. See subsection 9.4.1 for a description of the nuclear island nonradioactive ventilation system.

In the unlikely event that power to the nuclear island nonradioactive ventilation system is unavailable for more than 72 hours, MCR habitability is maintained by operating one of the two MCR ancillary fans to supply outside air to the MCR. See subsection 9.4.1 for a description of this cooling mode of operation. Doors and ducts may be opened to provide a supply pathway and an exhaust pathway. Likewise, outside air is supplied to division B and C instrumentation and control rooms in order to maintain the ambient temperature below the qualification temperature of the equipment.

The main control room emergency habitability system piping and instrumentation diagram is shown in Figure 6.4-2.

6.4.2.3 Component Description

The main control room emergency habitability system compressed air supply contains a set of storage tanks connected to a main and an alternate air delivery line. Components common to both lines include a manual isolation valve ~~and~~ and a pressure regulating valve~~, and a flow metering orifice~~. Single active failure protection is provided by the use of redundant, remotely operated isolation valves, which are located within the MCR pressure boundary. In the event of insufficient or excessive flow in the main delivery line, the main delivery line is isolated and the alternate delivery line is manually actuated. The alternate delivery line contains the same components as the main delivery line with the exception of the remotely operated isolation valves, and thus is capable of supplying compressed air to the MCR pressure boundary at the required air flowrate. The VES piping and penetrations for the MCR envelope are designated as equipment Class C. Additional details on Class C designation are provided in subsection 3.2.2.5. The classification of VES components is provided in Table 3.2-3, as appropriate.

Emergency Air Storage Tanks

There are a total of 32 air storage tanks. The air storage tanks are constructed of forged, seamless pipe, with no welds, and conform to Section VIII and Appendix 22 of the ASME Code. The design pressure of the air storage tanks is 4000 psi. The storage tanks collectively contain a minimum storage capacity of 314,132 scf of air at a minimum pressure of 3400 psig.

Pressure Regulating Valve

Each compressed air supply line contains a pressure regulating valve located downstream of the common header. The pressure at the outlet of the valve is controlled via a self contained pressure control operator. The downstream pressure is set to approximately 100 psig so that the flow rate can be controlled by an orifice downstream of the valve.

Flow Metering Orifice

The flow rate of air delivered to the main control room pressure boundary is limited by an orifice located downstream of the pressure regulating valve in the eductor and in the eductor bypass line. The orifice is sized to provide the required air flowrate to the main control room pressure boundary, with an upstream pressure of approximately 100 psig.

Air Delivery Main Isolation Valve

The pressure boundary of the compressed air storage tanks is maintained by normally closed remotely operated isolation valves in the main supply line. These valves are located within MCR pressure boundary downstream of the pressure regulating valve and automatically initiate air flow upon receipt of a signal to open (see subsection 6.4.3.2).

Pressure Relief Isolation Valve

To limit the pressure increase within the main control room, isolation valves are provided, one in each of redundant flowpaths, which open on a time delay after receipt of an emergency habitability system actuation signal. The valves provide a leak tight seal to protect the integrity of the main control room pressure boundary during normal operation, and are normally closed to prevent interference with the operation of the nonradioactive ventilation system.

Main Air Flowpath Isolation Valve

The main air flowpath contains a normally open, manually operated valve located within the MCR pressure boundary, upstream of the remotely operated air delivery main isolation valves. The valve is provided as a means of isolating and preserving the air storage tank's contents in the event of a pressure regulating valve malfunction.

Air Delivery Alternate Isolation Valve

The alternate air delivery flowpath contains a normally closed, manually operated valve, located within the MCR pressure boundary. The valve is provided as a means of manually activating the alternate air delivery flowpath in the event the main air delivery flowpath is inoperable.

Pressure Relief Damper

Pressure relief dampers are located downstream of the butterfly isolation valves, and are set to open on a differential pressure of at least 1/8-inch water gauge with respect to the surrounding areas. The differential pressure between the control room and the surrounding area location is monitored to ensure that a positive pressure is maintained in the control room with respect to its surroundings.

The pressure relief dampers discharge through the MCR vestibule in order to reduce the amount of radioactivity that can be transported into the MCR when operators enter. Two

vestibule discharge openings provide a purge flow path from the vestibule to the corridor.

Control Room Access Doors

Two sets of doors, with a vestibule between that acts as an airlock, are provided at the access to the main control room.

Breathing Apparatus

Self-contained portable breathing equipment with air bottles is stored inside the main control room pressure boundary. The amount of stored air is sufficient to provide a 6-hour supply of breathable air for up to 11 main control room occupants. This is backup protection to the permanently installed habitability systems.

6.4.4 System Safety Evaluation

In the event of an accident involving the release of radioactivity to the environment, the nuclear island nonradioactive ventilation system (VBS) is expected to switch from the normal operating mode to the supplemental air filtration mode to protect the main control room personnel. Although the VBS is not a safety-related system, it is expected to be available to provide the necessary protection for realistic events. However, the design basis accident doses reported in Chapter 15 utilize conservative assumptions, and the main control room doses are calculated based on operation of the safety-related emergency habitability system (VES) since this is the system that is relied upon to limit the amount of activity the personnel are exposed to. The analyses assume that the VBS is initially in operation, but fails to enter the supplemental air filtration mode on a High-1 radioactivity indication in the main control room atmosphere. VES operation is then assumed to be initiated once the High-2 level for control room atmosphere activity is reached.

Doses were also calculated assuming that the VBS does operate in the supplemental air filtration mode as designed, but with no switchover to VES operation, despite the fact that the High-2 radioactivity level would be exceeded for the design basis accidents. This VBS operating case demonstrates the defense-in-depth that is provided by the system and also shows that, in the event of an accident with more realistic assumptions, the VBS would be more than adequate to protect the control room operators without depending on VES operation.

Doses were determined for the following design basis:

	VES Operating	VBS Operating
Large Break LOCA	4.41 rem TEDE	4.73 rem TEDE
Fuel Handling Accident	2.5 rem TEDE	1.6 rem TEDE
Steam Generator Tube Rupture		
(Pre-existing iodine spike)	4.3 rem TEDE	3.1 rem TEDE
(Accident-initiated iodine spike)	1.2 rem TEDE	1.7 rem TEDE
Steam Line Break		
(Pre-existing iodine spike)	3.9 rem TEDE	2.1 rem TEDE
(Accident-initiated iodine spike)	4.0 rem TEDE	4.9 rem TEDE
Rod Ejection Accident	1.8 rem TEDE	2.2 rem TEDE
Locked Rotor Accident		
(Accident without feedwater available)	0.7 rem TEDE	0.5 rem TEDE
(Accident with feedwater available)	0.5 rem TEDE	1.5 rem TEDE
Small Line Break Outside Containment	0.8 rem TEDE	0.3 rem TEDE

For all events the doses are within the dose acceptance limit of 5.0 rem TEDE. The details of analysis assumptions for modeling the doses to the main control room personnel are delineated in the LOCA dose analysis discussion in subsection 15.6.5.3.

No radioactive materials are stored or transported near the main control room pressure boundary.

As discussed and evaluated in subsection 9.5.1, the use of noncombustible construction and heat and flame resistant materials throughout the plant reduces the likelihood of fire and consequential impact on the main control room atmosphere. Operation of the nuclear island nonradioactive ventilation system in the event of a fire is discussed in subsection 9.4.1.

The exhaust stacks of the onsite standby power diesel generators are located in excess of 150 feet away from the fresh air intakes of the main control room. The onsite standby power system fuel oil storage tanks are located in excess of 300 feet from the main control room fresh air intakes. These separation distances reduce the possibility that combustion fumes or smoke from an oil fire would be drawn into the main control room.

The protection of the operators in the main control room from offsite toxic gas releases is discussed in Section 2.2. The sources of onsite chemicals are described in Table 6.4-1, and their locations are shown on Figure 1.2-2. Analysis of these sources is in accordance with Regulatory Guide 1.78 (Reference 5) and the methodology in NUREG-0570, "Toxic Vapor Concentrations in the Control Room Following a Postulated Accidental Release" (Reference 6), and the analysis shows that these sources do not represent a toxic hazard to control room personnel.

A supply of protective clothing, respirators, and self-contained breathing apparatus adequate for 11 persons is stored within the main control room pressure boundary.

The main control room emergency habitability system components discussed in subsection 6.4.2.3 are arranged as shown in Figure 6.4-2. The location of components and piping within the main control room pressure boundary provides the required supply of compressed air to the main control room pressure boundary, as shown in Figure 6.4-1.

During emergency operation, the main control room emergency habitability system passive heat sinks are designed to limit the temperature inside the main control room to remain within limits for reliable human performance (References 2 and 3) over 72 hours. The passive heat sinks limit the air temperature inside the instrumentation and control rooms to 120°F and dc equipment rooms to 120°F. The walls and ceilings that act as the passive heat sinks contain sufficient thermal mass to accommodate the heat sources from equipment, personnel, and lighting for 72 hours.

The main control room emergency habitability system nominally provides 65 scfm of ventilation air to the main control room from the compressed air storage tanks. 60 scfm of supplied ventilation flow is sufficient to induce a filtration flow of at least 600 cfm into the passive air filtration line located inside the main control room envelope. This ventilation flow is also sufficient to pressurize the control room to at least positive 1/8-inch water gauge differential pressure with respect to the surrounding areas in addition to limiting the carbon

dioxide concentration below one-half percent by volume for a maximum occupancy of 11 persons and maintaining air quality within the guidelines of Table 1 and Appendix C, Table C-1, of Reference 1.

Automatic transfer of habitability system functions from the main control room/control support area HVAC subsystem of the nuclear island nonradioactive ventilation system to the main control room emergency habitability system is initiated by either the following conditions:

"High-high" particulate or iodine radioactivity in MCR air supply duct
Loss of ac power for more than 10 minutes

The airborne fission product source term in the reactor containment following the postulated LOCA is assumed to leak from the containment and airborne fission products are assumed to result from spent fuel pool steaming. The concentration of radioactivity, which is assumed to surround the main control room, after the postulated accident, is evaluated as a function of the fission product decay constants, the containment leak rate, and the meteorological conditions assumed. The assessment of the amount of radioactivity within the main control room takes into consideration the radiological decay of fission products and the infiltration/exfiltration rates to and from the main control room pressure boundary.

A single active failure of a component of the main control room emergency habitability system or nuclear island nonradioactive ventilation system does not impair the capability of the systems to accomplish their intended functions. The Class 1E components of the main control room emergency habitability system are connected to independent Class 1E power supplies. Both the main control room emergency habitability system and the portions of the nuclear island nonradioactive ventilation system which isolates the main control room are designed to remain functional during an SSE or design-basis tornado.

In accordance with SECY-77-439 (Reference 13), a single passive failure of a component in the passive filtration line in the main control room emergency habitability system does not impair the capability of the system to accomplish its intended function. Passive filtration using the main control room habitability system is not required to maintain operator dose rates below the acceptance limit of 5.0 rem TEDE 24 hours after the initiation of a design basis event. The dose rates for the following limiting cases were determined to demonstrate that passive filtration is not required 24 hours after the initiation of a design basis event. The following cases are evaluated since they involve releases that extend beyond 24 hours after the initiation of the event.

Large Break LOCA	4.41 rem TEDE
Steam Line Break	
(Pre-existing iodine spike)	3.91 rem TEDE
(Accident-initiated iodine spike)	4.41 rem TEDE

For all events the doses are within the dose acceptance limit of 5.0 rem TEDE. The details of analysis assumptions for modeling the doses to the main control room personnel are the same as those delineated in the LOCA dose analysis discussion in subsection 15.6.5.3 assuming a passive failure disables the passive filtration flow path after 24 hours. Potential blockage in the filtration line does not preclude breathable air from the emergency air storage tanks from being delivered to the main control room envelope for 72 hours during VES operation. An eductor bypass line with flow control orifice provides the operators with the ability to ensure that the breathable air from the emergency air storage tanks is delivered to the MCR.

6.4.8 References

1. "Ventilation for Acceptable Indoor Air Quality," ASHRAE Standard 62 - 1989.

2. "Human Engineering Design Guidelines," MIL-HDBK-759C, 31 July 1995.

3. "Human Engineering," MIL-STD-1472E, 31 October 1996.

4. "Standard Test Methods for Determining Air Change in a Single Zone by Means of a Tracer Gas Dilution," ASTM E741, 2000.

5. "Evaluating the Habitability of a Nuclear Power Plant Control Room During a Postulated Hazardous Chemical Release," Regulatory Guide 1.78, Revision 1, December 2001.

6. NUREG-0570, "Toxic Vapor Concentrations in the Control Room Following a Postulated Accidental Release," June 1979

7. "Code on Nuclear Air and Gas Treatment," ASME/ANSI AG-1-1997

8. "Loss of Charcoal Adsorber Cells," IE Bulletin 80-03, 1980

9. "High-Efficiency, Particular, Air-Filter Units," UL-586, 1996

10. "Design, Testing, and Maintenance Criteria for Post Accident Engineered-Safety-Feature Atmosphere Cleanup System Air Filtration and Adsorption Units of Light-Water-Cooled Nuclear Power Plants," Regulatory Guide 1.52 Revision 3, 2001

11. "Test Performance of Air-Filter Units," UL-900, 1994

12. ~~"Design, Testing, and Maintenance Criteria for Post Accident Engineered Safety-Feature Atmosphere Cleanup System Air Filtration and Absorption Units of Light-Water Cooled Nuclear Power Plants," Regulatory Guide 1.52, Revision 3~~"AP1000 VES Air Filtration System Test Report," TR-SEE-III-09-03

13. "Single Failure Criterion," SECY-77-439

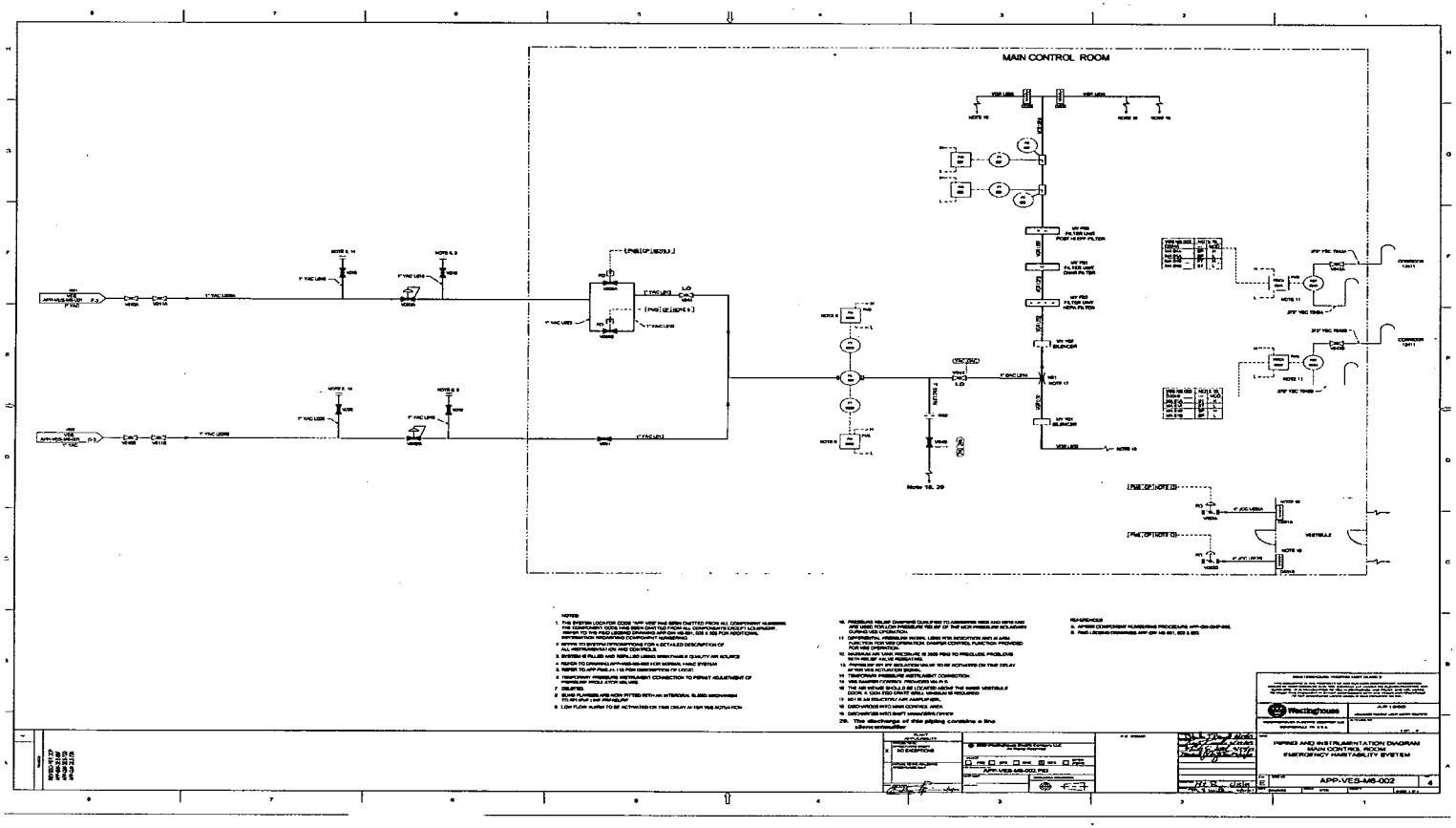

Figure 6.4-2 (Sheet 2 of 2)

Main Control Room Habitability System
Piping and Instrumentation Diagram

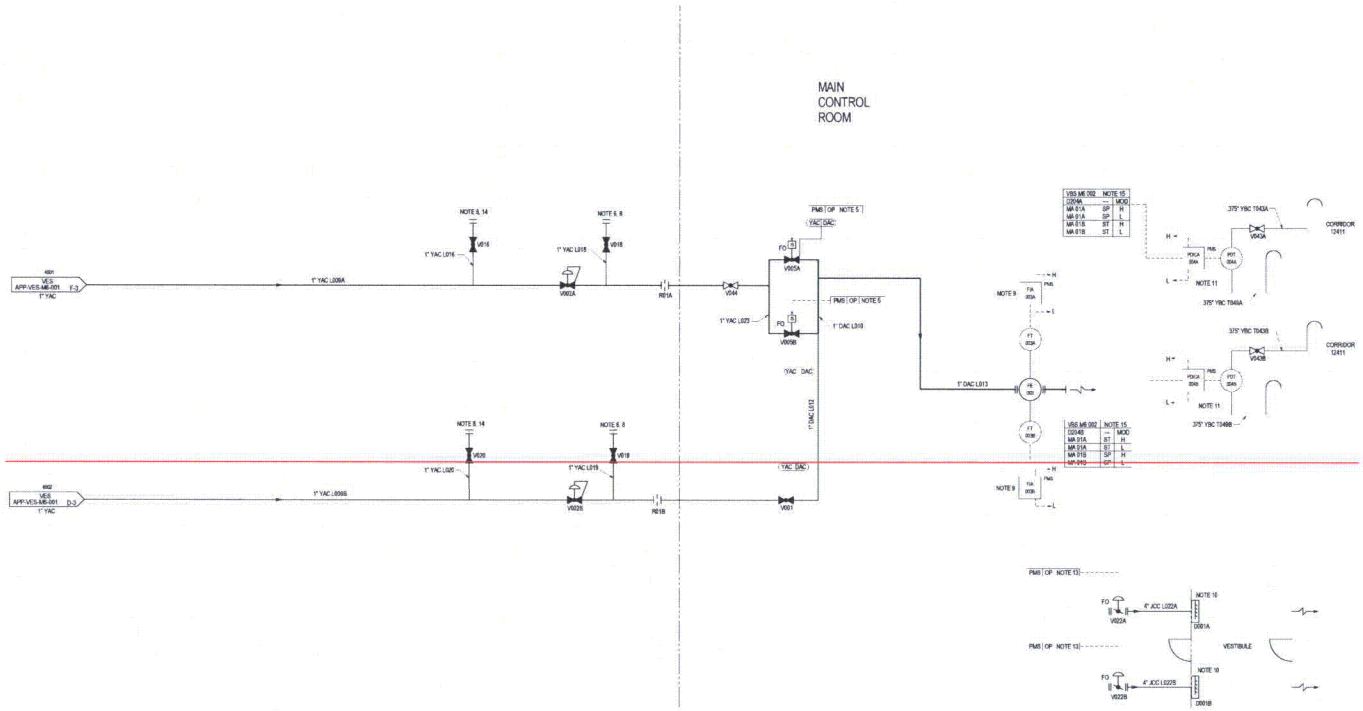

NOTES:

1. THE SYSTEM LOCATOR CODE "APP-VES" HAS BEEN OMITTED FROM ALL COMPONENT NUMBERS. THE COMPONENT CODE HAS BEEN OMITTED FROM ALL COMPONENTS EXCEPT EQUIPMENT. REFER TO THE PM0 LEGEND DRAWING APP-GW-M6-001, 002 & 003 FOR ADDITIONAL INFORMATION REGARDING COMPONENT NUMBERING.
2. REFER TO SYSTEM DESCRIPTIONS FOE A DETAILED DESCRIPTION OF ALL INSTRUMENTATION AND CONTROLS.
3. SYSTEM IS FILLED AND REFILLED USING BREATHABLE QUALITY AIR SOURCE.
4. REFER TO BECHTEL DRAWING APP-VBS-M6-002 FOR NORMAL HVAC SYSTEM.
5. REFER TO APP-PM0-J1-113 FOR DESCRIPTION OF LOGIC.
6. TEMPORARY PRESSURE INSTRUMENT CONNECTION TO PERMIT ADJUSTMENT OF PRESSURE REGULATOR VALVES.
7. DELETED.
8. BLIND FLANGES ARE NOW FITTED WITH AN INTERGRAL BLEED MECHANISM TO RELIEVE LINE PRESSURE.
9. LOW FLOW ALARM TO BE ACTIVATED ON TIME DELAY AFTER VES ACTUATION
10. PRESSURE RELIEF DAMPERS QUALIFIED TO ASME/ANSI N509 AND N510 AND ARE USED FOR LOW PRESSURE RELIEF OF THE MCR PRESSURE BOUNDARY DURING VES OPERATION.
11. DIFFERENTIAL PRESSURE SIGNAL USED FOR INDICATION AND ALARM FUNCTION FOR VES OPERATION. DAMPER CONTROL FUNCTION PROVIDED FOR VBS OPERATION.
12. MAXIMUM AIR TANK PRESSURE IS 3600 PSIG TO PRECLUDE PROBLEMS WITH RELIEF VALVE RESEATING.
13. PRESSURE RELIEF ISOLATION VALVE TO BE ACTUATED ON TIME DELAY AFTER VES ACTUATION SIGNAL.
14. TEMPORARY PRESSURE INSTRUMENT CONNECTION.
15. VBS DAMPER CONTROL PROVIDED VIA PLS.

REFERENCES:

A. AP1000 COMPONENT NUMBERING PROCEDURE APP-GW-GMP-306.
B. PM0 LEGEND DRAWINGS APP-GW-M6-001, 002 & 003.