Murray Selman
Vice President

Consolidated Edison Company of New York, Inc.
Indian Point Station
Broadway & Bleakley Avenue
Buchanan, NY 10511
Telephone (914) 737-8116

February 11, 1987

U. S. Nuclear Regulatory Commission
ATTN: Document Control Desk
Washington, D. C. 20555

Re: Consolidated Edison Company of New York, Inc.
Indian Point Unit No. 2
Docket No. 50-247

Dear Sir:

This is in response to Ms. Marylee Slosson's letter of September 23, 1986 concerning our Procedures Generation Package (PGP) submitted on June 4, 1984.

On April 15, 1983 we submitted our program to implement the requirements of NUREG-0737, Supplement 1. One of the key elements of that program was the development of symptom oriented Emergency Operating Procedures (EOPs). Our goal was to implement new EOPs following operator training by October 1, 1985; this was accomplished on September 20, 1985. As part of our program, we submitted on June 4, 1984 a PGP based on available industry guidance. During the EOP development we utilized available NRC and Westinghouse guidance and, in many cases, superseded our own PGP without revising it each time. As described below and in the Attachments to this letter, the documentation we developed during the EOP development program updates our PGP and resolves the open matters in your staff's September 22, 1986 evaluation. This is the case because we utilized guidance in NUREG-0899 and later Standard Review Plan (SRP) 13.5.2, participated in the Westinghouse Owners Group (WOG), and contracted key Westinghouse personnel involved with the development of the WOG Emergency Response Guidelines (ERGs) to assist us in developing upgraded EOPs.

A003
1/2

8703030329 870211
PDR ADOCK 05000247
F PDR

The preimplementation portion of our upgraded EOP program consisted of completing basically five major phases:

a) <u>EOP Development</u> - This phase consisted of

(1) an evaluation of design differences between Indian Point Unit No. 2 and the ERG reference plant and what impact, if any, these differences would have on mitigative strategies, procedural steps, etc.,

(2) an evaluation of the generic safety analyses supporting the ERGs to determine applicability to Indian Point Unit No. 2, and to what extent new analyses would be needed,

(3) calculation of each fill-in value (EOP setpoint) specified in the ERGs, LP - Rev. 1 using plant specific instrumentation data, channel accuracies and normal and adverse containment environment parameters, as applicable,

(4) preparing and reviewing draft EOPs,

(5) documenting the differences between steps in the ERGs, LP - Rev. 1 and the Indian Point Unit No. 2 EOPs, providing an explanation or basis of the difference and determining that the differences are not significant enough to warrant changes to the flow or mitigative strategies, and

(6) review/feedback of completed draft EOPs prior to acceptance for verification and validation phases.

b) <u>Validation</u> - This phase consisted of

(1) designating personnel, preparing evaluation criteria, selecting the validation method and applicable scenario for each draft EOP including evaluating simulator capability,

(2) preparing assessment criteria, conducting the scenarios, recording discrepancies,

(3) resolving each discrepancy and feeding back the resolution to the draft EOP and/or applicable documents, and

(4) updating the EOPs in preparation for their verification and subsequent training phases.

c) <u>Verification</u> - This phase consisted of

(1) designating personnel, obtaining and reviewing EOP source documents, and preparing an evaluation criteria checklist,

(2) evaluating completed draft EOPs against the source documents in a step-by-step review and filling in the verification discrepancy sheets, as applicable,

(3) resolving discrepancies and feeding back the resolution to the draft EOP and/or applicable source documents, and

(4) updating the EOPs in preparation for the training phase.

d) Training - This phase consisted of six weeks of training for each licensed operator. This was accomplished by

(1) designating personnel and preparing classroom and simulator lesson plans, student information handouts, final draft EOPs, evaluating simulator capabilities and preparing exam question banks,

(2) conducting two weeks of classroom instruction and examination covering each EOP, their respective background document and associated plant transient analysis,

(3) conducting two weeks of directed self study and examination in EOPs, EOP background documents and supporting analyses,

(4) conducting two weeks of simulator training with classroom preparation and de-briefing, including evaluation and

(5) recording on a "trouble report" form discrepancies and/or operator comments developed during the entire training phase.

e) Operator Feedback - This phase consisted of

(1) resolving the EOP trouble reports by performing a screening of each, a technical review as necessary, documenting a response, feeding back to the EOPs and/or supporting documents

(2) updating the final draft EOPs prior to issuance,

(3) providing the responses to the operating crews, and

(4) updating EOP support documentation.

Subsequent to EOP implementation, we began implementing administrative controls to maintain the EOPs and support documentation. Since then we have better defined the tasks necessary to maintain the EOPs through a revised set of administrative procedures covering the critical aspects of the EOP development program described above. These formalize the methodologies and procedures used during the upgraded EOP development program itself. We believe that with these controls in place the concerns raised in Ms. Slosson's letter and those of Region I are adequately addressed. We are submitting these procedures to be responsive to specific concerns

and to facilitate your review of our PGP. In this manner we avoid having to create a set of doc- uments specific to this submittal and then having to convert them over to station procedures. We wish to point out that as station procedures these documents will be revised, as necessary, without resubmitting them to the NRC each time and that these will not be controlled copies for receiving updates.

Attachment 1 contains our responses to the items contained in the Draft Safety Evaluation Report that was enclosed with Ms. Slosson's September 22, 1986 letter. Attachment 1 makes reference in many cases to the other Attachments that accompany this submittal for specific details and, as such, is intended to provide a road map through the submittal. The following is a list of the Attachments to this letter:

Attachment 1: Response to Draft Safety Evaluation Report.

Attachment 2: EOP Step Differences.

Attachment 3: Design Difference and Generic Analysis Applicability Evaluations.

Attachment 4: Generation Support Administrative Directive - 6; EOP Validation Process.

Attachment 5: Generation Support Administrative Directive - 7; EOP Verification Process.

Attachment 6: EOP Validation Program Results.

Attachment 7: EOP Verification Program Results.

Attachment 8: EOP Process Parameter Values.

Attachment 9: Generation Support Administrative Directive - 3; EOP Maintenance Program.

Attachment 10: Generation Support Administrative Directive - 4; EOP Writers Guide.

Attachment 11: Operations Administrative Directive - 26; EOP Users Guide.

These Attachments and this letter supplement our June 4, 1984 PGP submittal and together update the PGP. As indicated in our letter of January 2, 1987 to Mr. Stewart D. Ebneter of Region I, this revised PGP should facilitate EOP changes in the future, thereby avoiding the concerns raised in the July 21, 1986 operational safety inspection at Indian Point Unit No. 2.

The Indian Point Unit No. 2 EOPs are based upon acceptable technical guidelines derived from approved analyses of transients and accidents. Implementation of the above described program included an analysis of the operator's tasks resulting in the identification of the instrumentation and controls necessary to perform the functions specified in the technical

guidelines. The writer's guide provides sufficient information to ensure that EOPs are useable, accurate, complete, readable and acceptable to control room personnel. The verification and validation program assures that EOPs are technically correct and useable, follow the writer's guide, correspond to the control room/plant hardware, and are compatible with the minimum number, qualifications, training, and experience of the operating staff. The training and operator feedback programs resulted in the operator's understanding the philosophy behind the approach to the EOPs, understanding the mitigative strategy and technical basis of the EOPs, having a working knowledge of the technical content of the EOPs, and having the capability to execute the EOPs under expected operational conditions. We believe that the methods described in the Attachments are sufficient to support a program of procedure upgrading and to ensure long-term consistency within and among procedures. Based on this we further believe that our upgraded EOP development program meets the requirements of NUREG-0737, Supplement 1 and is consistent with its integration objectives.

On January 16, 1987 we discussed with members of your staff the need to reevaluate our System Function and Task Analysis (SFTA) performed as part of our Detailed Control Room Design Review (DCRDR) program in light of IE Information Notice No. 86-64 entitled; "Deficiencies in Upgrade Programs for Plant EOPs" (IEN-86-64). After examination of IEN-86-64 we have concluded that the concerns raised have adequately been covered in our EOP development program as outlined above. The upgraded EOPs developed from this program were used for the SFTA activity and valuable feedback was gained for both the DCRDR upgrades committed to in our June 30, 1986 submittal and the EOP implementation. Based on our review of IEN-86-64 we do not see a need to revise the EOPs and thus, since they were used in the SFTA, the SFTA does not have to be re-evaluated to address IEN-86-64 and is considered complete.

If you or your staff have any questions regarding the information in this letter and its attachments, please contact us, or if you desire we would be pleased to meet with you.

Very truly yours,

John A. Basile

cc: Senior Resident Inspector
U.S. Nuclear Regulatory Commission
P.O. Box 38
Buchanan, NY 10511

Dr. Thomas E. Murley
Regional Administrator - Region I
U.S. Nuclear Regulatory Commission
631 Park Avenue
King of Prussia, PA 19406

Ms. Marylee M. Slosson, Project Manager
PWR Project Directorate # 3
Division of PWR Licensing - A
U.S. Nuclear Regulatory Commission
Philips Building
7920 Norfolk Avenue
Bethesda, MD 20014

Mr. Hugh L. Thompson, Jr, Director
Division of Licensing
Nuclear Reactor Regulation
U.S. Nuclear Regulatory Commission
Washington, DC 20555

Docket # 50-247
Control # 8703030329
Date 2/11/87 of Document
REGULATORY DOCKET FILE

PART I OF II

PROCEDURES GENERATION PACKAGE - RESOLVES CONCERNS IN SAFETY EVALUATION

Attachment 7

EOP Verification Program Results

Consolidated Edison Company of New York, Inc.
Indian Point Unit No. 2
February , 1987

These EOP verification forms present the results of the initial verification process carried out in accordance with the EOP verification procedure. The resolution of these items was implemented as indicated on the forms themselves. The approval signatures on each form was not necessary since this was the initial verification and the EOP set itself was approved after the verification by the Operations Manager and the Station Nuclear Safety Committee prior to implementation, thereby incorporating the verification resolution as stated. Recorded on some of these forms are the assessment and resolution of discrepancies in a procedure step and can be used effectively with a copy of the ERGs and EOPs in conjunction with the step differences forms as the step text is not repeated. For steps not listed there were no discrepancies.

CONSOLIDATED EDISON COMPANY
OF NEW YORK

INDIAN POINT UNIT NO. 2

EMERGENCY OPERATING PROCEDURE

VERIFICATION PROGRAM

JANUARY 1, 1985

INDIAN POINT UNIT 2

EOP VERIFICATION FORM #1

EOP TITLE: Reactor Trip or Safety Injection

EOP NUMBER: E-0 REVISION: 11-30-84

SCOPE OF VERIFICATION: Assessment Phase

EVALUATOR(S): C. R. Sterrett

EOP SOURCE DOCUMENTS USED:

1. WOG Generic ERGs Revision 1 (LP) and Background Documents
2. FSAR
3. Indian Point 2 Plant Specific Technical Guidelines August, 1984
4. Operations Administrative Directive 7, Rev. 10
5. Indian Point 2 Writers Guide for EOPs
6. Indian Point 2 System Descriptions

PROCEDURE-GENERAL VERIFICATION

1. WRITTEN CORRECTNESS

AREA	ACCEPTABLE	DISCREPANCY SHEET #(s)
LEGIBILITY	X	
EOP FORMAT CONSISTENCY		1, 2, 3, 4, 6
IDENTIFICATION INFORMATION	X	
2. TECHNICAL ACCURACY	X	

STEP, CAUTION, NOTE-SPECIFIC VERIFICATION

Are there any Step, CAUTION, or NOTE level discrepancies for this procedure?

X YES, DISCREPANCY SHEET #(s) 5 ____ NO

INDIAN POINT UNIT 2

EOP VERIFICATION FORM #2

DISCREPANCY SHEET NUMBER 1

Area of Concern: X written correctness

(Check Applicable) ____ technical accuracy

EOP: E-0 REV.: 11-30-84 STEP NUMBER: Entry Conditions B.1) O. (As applicable)

DISCREPANCY:

EOPs use °F symbol, while the Indian Point Unit 2 writer's guide (OAD 7, Rev. 10), Item 9.3.11 states 'Do not use a degree sign between a temperature and the scale. Example: Use 525F instead of 525°F.'

EVALUATOR: C. R. Sterrett DATE: 12-17-84

RESOLUTION:

Revise EOPs to delete (°) symbol.

APPROVED: YES NO (circle one)

OPERATIONS STAFF MANAGER: _____ DATE: _____

RESOLUTION INCORPORATED BY: _____ DATE: _____

INDIAN POINT UNIT 2
EOP VERIFICATION FORM #2
DISCREPANCY SHEET NUMBER 2

Area of Concern: X written correctness
(Check Applicable) ____ technical accuracy

EOP: E-0 REV.: 11-30-84 STEP NUMBER: 7 (As applicable)

DISCREPANCY:

NOTE before Step 7 begins with 'NOTE', while W.G. OAD 7, Rev. 10, Item 10.3.5 states 'Type NOTE: in capitals and underline.'

EVALUATOR: C. R. Sterrett DATE: 12-17-84

RESOLUTION:

Revise EOPs.

APPROVED: YES NO (circle one)

OPERATIONS STAFF MANAGER: _____ DATE: _____

RESOLUTION INCORPORATED BY: _____ DATE: _____

INDIAN POINT UNIT 2

EOP VERIFICATION FORM #2

DISCREPANCY SHEET NUMBER 3

Area of Concern: X written correctness

(Check Applicable) ____ technical accuracy

EOP: E-0 REV.: 11-30-84 STEP NUMBER: 8 (As applicable)

DISCREPANCY:

EOP uses Attachment A designation, while W.G. OAD 7, Rev. 10, Section 6.4 states 'Number attachments sequentially by arabic numeral'. Also attachment heading should be in upper right corner, not centered above text (EOP E-0, Page 24).

EVALUATOR: C. R. Sterrett DATE: 12-17-84

RESOLUTION:

Revise EOPs.

APPROVED: YES NO (circle one)

OPERATIONS STAFF MANAGER: _____ DATE: _____

RESOLUTION INCORPORATED BY: _____ DATE: _____

INDIAN POINT UNIT 2
EOP VERIFICATION FORM #2
DISCREPANCY SHEET NUMBER 4

Area of Concern: X written correctness
(Check Applicable) ____ technical accuracy

EOP: E-0 REV.: 11-30-84 STEP NUMBER: 21 (As applicable)
Caution prior to step

DISCREPANCY:

EOP Cautions are incorrect. W.G. OAD 7, Rev. 10, Item 10.3.4 states 'right margin in (left) approximately ten characters from previous text' and 'type asterisks on left and right borders of Caution'. EOP Cautions do not indent or use left and right border asterisks.

EVALUATOR: C. R. Sterrett DATE: 12-17-84

RESOLUTION:

Revise EOPs.

APPROVED: YES NO (circle one)

OPERATIONS STAFF MANAGER: _____ DATE: _____

RESOLUTION INCORPORATED BY: _____ DATE: _____

INDIAN POINT UNIT 2

EOP VERIFICATION FORM #2

DISCREPANCY SHEET NUMBER 5

Area of Concern: ____ written correctness

(Check Applicable) X technical accuracy

EOP: E-0 REV.: 11-30-84 STEP NUMBER: 33a (As applicable)

DISCREPANCY:

EOP upper limit is 65%, while ERG upper limit is 50%. Step justification does not document the change.

EVALUATOR: C. R. Sterrett DATE: 12-17-84

RESOLUTION:

Revise step justification.

APPROVED: YES NO (circle one)

OPERATIONS STAFF MANAGER: _____ DATE: _____

RESOLUTION INCORPORATED BY: _____ DATE: _____

INDIAN POINT UNIT 2

EOP VERIFICATION FORM #2

DISCREPANCY SHEET NUMBER 6

Area of Concern: ____ written correctness

(Check Applicable) X technical accuracy

EOP: E-0 REV.: 11-30-84 STEP NUMBER: Foldout Item 2 (As applicable)

DISCREPANCY:

EOP does not include '(__% for adverse containment)' while ERG does. The table is confusing if operator is not familiar with '( )' designation.

EVALUATOR: C. R. Sterrett DATE: 12-17-84

RESOLUTION:

Revise EOPs.

APPROVED: YES NO (circle one)

OPERATIONS STAFF MANAGER: _____ DATE: _____

RESOLUTION INCORPORATED BY: _____ DATE: _____

INDIAN POINT UNIT 2

EOP VERIFICATION FORM #1

EOP TITLE: Rediagnosis

EOP NUMBER: ES-0.0 REVISION: 11-30-84

SCOPE OF VERIFICATION: Assessment Phase

EVALUATOR(S): C. R. Sterrett

EOP SOURCE DOCUMENTS USED:

1. WOG Generic ERGs Revision 1 (LP) and Background Documents
2. FSAR
3. Indian Point 2 Plant Specific Technical Guidelines August, 1984
4. Operations Administrative Directive 7, Rev. 10
5. Indian Point 2 Writers Guide for EOPs
6. Indian Point 2 System Descriptions

PROCEDURE-GENERAL VERIFICATION

1. WRITTEN CORRECTNESS

AREA	ACCEPTABLE	DISCREPANCY SHEET #(s)
LEGIBILITY	X	
EOP FORMAT CONSISTENCY		1, 2
IDENTIFICATION INFORMATION	X	
2. TECHNICAL ACCURACY	X	

STEP, CAUTION, NOTE-SPECIFIC VERIFICATION

Are there any Step, CAUTION, or NOTE level discrepancies for this procedure?

____ YES, DISCREPANCY SHEET #(s) _____ X NO

INDIAN POINT UNIT 2
EOP VERIFICATION FORM #2
DISCREPANCY SHEET NUMBER 1

Area of Concern: X written correctness
(Check Applicable) ____ technical accuracy

EOP: ES-0.0 REV.: 11-30-84 STEP NUMBER: Note prior (As applicable) to Step 1

DISCREPANCY:

First bullet does not designate 'for E-0 series procedures' for the foldout page. Other EOPs mention this designation for each foldout page.

EVALUATOR: C. R. Sterrett DATE: 12-21-84

RESOLUTION:

Revise EOPs.

APPROVED: YES NO (circle one)

OPERATIONS STAFF MANAGER: _____ DATE: _____

RESOLUTION INCORPORATED BY: _____ DATE: _____

INDIAN POINT UNIT 2
EOP VERIFICATION FORM #2
DISCREPANCY SHEET NUMBER 2

Area of Concern: X written correctness
(Check Applicable) ____ technical accuracy

EOP: ES-0.0 REV.: 11-30-84 STEP NUMBER: 1a RNO + Others (As applicable)

DISCREPANCY:

Logic terms (IF, THEN, etc.) are not underlined. W.G. OAD 7, Rev. 10, Attachment 1, Section 4.2.3 requires logic terms to be capitalized and underlined for emphasis.

EVALUATOR: C. R. Sterrett DATE: 12-21-84

RESOLUTION:

Revise EOP to underline logic terms.

APPROVED: YES NO (circle one)

OPERATIONS STAFF MANAGER: _____ DATE: _____

RESOLUTION INCORPORATED BY: _____ DATE: _____

INDIAN POINT UNIT 2

EOP VERIFICATION FORM #1

EOP TITLE: Reactor Trip Response

EOP NUMBER: ES-0.1 REVISION: 11-30-84

SCOPE OF VERIFICATION: Assessment Phase

EVALUATOR(S): C. R. Sterrett

EOP SOURCE DOCUMENTS USED:

1. WOG Generic ERGs Revision 1 (LP) and Background Documents
2. FSAR
3. Indian Point 2 Plant Specific Technical Guidelines August, 1984
4. Operations Administrative Directive 7, Rev. 10
5. Indian Point 2 Writers Guide for EOPs
6. Indian Point 2 System Descriptions

PROCEDURE-GENERAL VERIFICATION

1. WRITTEN CORRECTNESS

AREA	ACCEPTABLE	DISCREPANCY SHEET #(s)
LEGIBILITY	X	
EOP FORMAT CONSISTENCY	X	
IDENTIFICATION INFORMATION	X	
2. TECHNICAL ACCURACY	X	

STEP, CAUTION, NOTE-SPECIFIC VERIFICATION

Are there any Step, CAUTION, or NOTE level discrepancies for this procedure?

X YES, DISCREPANCY SHEET #(s) 1, 2, 3, 4 ____ NO

INDIAN POINT UNIT 2

EOP VERIFICATION FORM #2

DISCREPANCY SHEET NUMBER 1

Area of Concern: X written correctness
(Check Applicable) ____ technical accuracy

EOP: ES-0.1 REV.: 11-30-84 STEP NUMBER: 2, RNO (As applicable)

DISCREPANCY:

Second if statement, 'tan' should be 'than'.

EVALUATOR: C. R. Sterrett DATE: 12-26-84

RESOLUTION:

Correct spelling.

APPROVED: YES NO (circle one)

OPERATIONS STAFF MANAGER: _____ DATE: _____

RESOLUTION INCORPORATED BY: _____ DATE: _____

INDIAN POINT UNIT 2

EOP VERIFICATION FORM #2

DISCREPANCY SHEET NUMBER 2

Area of Concern: ____ written correctness

(Check Applicable) X technical accuracy

EOP: ES-0.1 REV.: 11-30-84 STEP NUMBER: 6b.1)RNO (As applicable)

DISCREPANCY:

'Turn off' should be 'isolate' to be consistent with ERGs.

EVALUATOR: C. R. Sterrett DATE: 12-26-84

RESOLUTION:

Revise EOP.

APPROVED: YES NO (circle one)

OPERATIONS STAFF MANAGER: _____ DATE: _____

RESOLUTION INCORPORATED BY: _____ DATE: _____

INDIAN POINT UNIT 2
EOP VERIFICATION FORM #2
DISCREPANCY SHEET NUMBER 3

Area of Concern: X written correctness
(Check Applicable) ____ technical accuracy

EOP: ES-0.1 REV.: 11-30-84 STEP NUMBER: 11 RNO (As applicable)

DISCREPANCY:

First sentence should state 'Try to start one RCP:' not 'on RCP'.

EVALUATOR: C. R. Sterrett DATE: 12-26-84

RESOLUTION:

Correct EOP.

APPROVED: YES NO (circle one)

OPERATIONS STAFF MANAGER: _____ DATE: _____

RESOLUTION INCORPORATED BY: _____ DATE: _____

INDIAN POINT UNIT 2

EOP VERIFICATION FORM #2

DISCREPANCY SHEET NUMBER 4

Area of Concern: X written correctness
(Check Applicable) ____ technical accuracy

EOP: ES-0.1 REV.: 11-30-84 STEP NUMBER: Attachment A (As applicable)

DISCREPANCY:

Third heading should be '480V Bus Supply' not '48V bus supply'.

EVALUATOR: C. R. Sterrett DATE: 12-26-84

RESOLUTION:

Correct EOP.

APPROVED: YES NO (circle one)

OPERATIONS STAFF MANAGER: _____ DATE: _____

RESOLUTION INCORPORATED BY: _____ DATE: _____

INDIAN POINT UNIT 2

EOP VERIFICATION FORM #1

EOP TITLE: Natural Circulation Cooldown

EOP NUMBER: ES-0.2 REVISION: 11-30-84

SCOPE OF VERIFICATION: Assessment Phase

EVALUATOR(S): C. R. Sterrett

EOP SOURCE DOCUMENTS USED:

1. WOG Generic ERGs Revision 1 (LP) and Background Documents
2. FSAR
3. Indian Point 2 Plant Specific Technical Guidelines August, 1984
4. Operations Administrative Directive 7, Rev. 10
5. Indian Point 2 Writers Guide for EOPs
6. Indian Point 2 System Descriptions

PROCEDURE-GENERAL VERIFICATION

1. WRITTEN CORRECTNESS

AREA	ACCEPTABLE	DISCREPANCY SHEET #(s)
LEGIBILITY	X	
EOP FORMAT CONSISTENCY	X	
IDENTIFICATION INFORMATION	X	
2. TECHNICAL ACCURACY	X	

STEP, CAUTION, NOTE-SPECIFIC VERIFICATION

Are there any Step, CAUTION, or NOTE level discrepancies for this procedure?

X YES, DISCREPANCY SHEET #(s) 1 ____ NO

INDIAN POINT UNIT 2
EOP VERIFICATION FORM #2
DISCREPANCY SHEET NUMBER 1

Area of Concern: ____ written correctness
(Check Applicable) X technical accuracy

EOP: ES-0.2 REV.: 11-30-84 STEP NUMBER: Caution Before Step 9 (As applicable)

DISCREPANCY:

EOP uses 'RCS pressure' while ERG uses 'Przr Pressure'.

EVALUATOR: C. R. Sterrett DATE: 12-26-84

RESOLUTION:

Correct EOP

APPROVED: YES NO (circle one)

OPERATIONS STAFF MANAGER: _____ DATE: _____

RESOLUTION INCORPORATED BY: _____ DATE: _____

INDIAN POINT UNIT 2

EOP VERIFICATION FORM #1

EOP TITLE: Natural Circulation Cooldown With Steam Void in Vessel (With RVLIS)

EOP NUMBER: ES-0.3 REVISION: 11-30-84

SCOPE OF VERIFICATION: Assessment Phase

EVALUATOR(S): C. R. Sterrett

EOP SOURCE DOCUMENTS USED:

1. WOG Generic ERGs Revision 1 (LP) and Background Documents
2. FSAR
3. Indian Point 2 Plant Specific Technical Guidelines August, 1984
4. Operations Administrative Directive 7, Rev. 10
5. Indian Point 2 Writers Guide for EOPs
6. Indian Point 2 System Descriptions

PROCEDURE-GENERAL VERIFICATION

1. WRITTEN CORRECTNESS

AREA	ACCEPTABLE	DISCREPANCY SHEET #(s)
LEGIBILITY	X	
EOP FORMAT CONSISTENCY	X	
IDENTIFICATION INFORMATION	X	
2. TECHNICAL ACCURACY	X	

STEP, CAUTION, NOTE-SPECIFIC VERIFICATION

Are there any Step, CAUTION, or NOTE level discrepancies for this procedure?

X YES, DISCREPANCY SHEET #(s) 1, 2, 3, 4, 5, 6 ____ NO

INDIAN POINT UNIT 2

EOP VERIFICATION FORM #2

DISCREPANCY SHEET NUMBER 1

Area of Concern: X written correctness
(Check Applicable) ____ technical accuracy

EOP: ES-0.3 REV.: 11-30-84 STEP NUMBER: Note (As applicable)
Before Step 1

DISCREPANCY:

Third bullet, 'starting on RCP' should be 'starting an RCP' per ERG wording.

EVALUATOR: C. R. Sterrett DATE: 12-27-84

RESOLUTION:

Correct EOP.

APPROVED: YES NO (circle one)

OPERATIONS STAFF MANAGER: _____ DATE: _____

RESOLUTION INCORPORATED BY: _____ DATE: _____

INDIAN POINT UNIT 2

EOP VERIFICATION FORM #2

DISCREPANCY SHEET NUMBER 2

Area of Concern: ____ written correctness

(Check Applicable) X technical accuracy

EOP: ES-0.3 REV.: 11-30-84 STEP NUMBER: 2 RNO b.2) (As applicable)

DISCREPANCY:

Previous subcooling values were based on the hot leg wide range RTD's, however this table does not state criteria.

EVALUATOR: C. R. Sterrett DATE: 12-27-84

RESOLUTION:

Revise EOP to state criteria.

APPROVED: YES NO (circle one)

OPERATIONS STAFF MANAGER: _____ DATE: _____

RESOLUTION INCORPORATED BY: _____ DATE: _____

INDIAN POINT UNIT 2
EOP VERIFICATION FORM #2
DISCREPANCY SHEET NUMBER 3

Area of Concern: ____ written correctness
(Check Applicable) X technical accuracy

EOP: ES-0.3 REV.: 11-30-84 STEP NUMBER: 2 RNO b.2) (As applicable)

DISCREPANCY:

ERG states 'establish subcooling using steam dump', however EOP does not state means to establish subcooling.

EVALUATOR: C. R. Sterrett DATE: 12-27-84

RESOLUTION:

Revise EOP.

APPROVED: YES NO (circle one)

OPERATIONS STAFF MANAGER: _____ DATE: _____

RESOLUTION INCORPORATED BY: _____ DATE: _____

INDIAN POINT UNIT 2
EOP VERIFICATION FORM #2
DISCREPANCY SHEET NUMBER 4

Area of Concern: X written correctness
(Check Applicable) ____ technical accuracy

EOP: ES-0.3 REV.: 11-30-84 STEP NUMBER: 14 RNO c. (As applicable)

DISCREPANCY:

EOP 'return to Step 12' should be 'return to Step 13' to meet intent of ERGs.

EVALUATOR: C. R. Sterrett DATE: 12-27-84

RESOLUTION:

Correct EOP.

APPROVED: YES NO (circle one)

OPERATIONS STAFF MANAGER: _____ DATE: _____

RESOLUTION INCORPORATED BY: _____ DATE: _____

INDIAN POINT UNIT 2
EOP VERIFICATION FORM #2
DISCREPANCY SHEET NUMBER 5

Area of Concern: ____ written correctness
(Check Applicable) X technical accuracy

EOP: ES-0.3 REV.: 11-30-84 STEP NUMBER: 15 RNO a. (As applicable)

DISCREPANCY:

EOP 'pressurize' should be 'depressurize' to meet intent of ERGs.

EVALUATOR: C. R. Sterrett DATE: 12-27-84

RESOLUTION:

Correct EOP.

APPROVED: YES NO (circle one)

OPERATIONS STAFF MANAGER: _____ DATE: _____

RESOLUTION INCORPORATED BY: _____ DATE: _____

INDIAN POINT UNIT 2

EOP VERIFICATION FORM #2

DISCREPANCY SHEET NUMBER 6

Area of Concern: X written correctness

(Check Applicable) ____ technical accuracy

EOP: ES-0.3 REV.: 11-30-84 STEP NUMBER: 15 RNO a. (As applicable)

DISCREPANCY:

EOP 'return to Step 11' should be 'return to Step 13' to meet intent of ERGs.

EVALUATOR: C. R. Sterrett DATE: 12-27-84

RESOLUTION:

Revise EOP.

APPROVED: YES NO (circle one)

OPERATIONS STAFF MANAGER: _____ DATE: _____

RESOLUTION INCORPORATED BY: _____ DATE: _____

INDIAN POINT UNIT 2

EOP VERIFICATION FORM #1

EOP TITLE: Natural Circulation Cooldown With Steam Void in Vessel (Without RVLIS)

EOP NUMBER: ES-0.4 REVISION: 11-30-84

SCOPE OF VERIFICATION: Assessment Phase

EVALUATOR(S): C. R. Sterrett

EOP SOURCE DOCUMENTS USED:

1. WOG Generic ERGs Revision 1 (LP) and Background Documents
2. FSAR
3. Indian Point 2 Plant Specific Technical Guidelines August, 1984
4. Operations Administrative Directive 7, Rev. 10
5. Indian Point 2 Writers Guide for EOPs
6. Indian Point 2 System Descriptions

PROCEDURE-GENERAL VERIFICATION

1. WRITTEN CORRECTNESS

AREA	ACCEPTABLE	DISCREPANCY SHEET #(s)
LEGIBILITY	X	
EOP FORMAT CONSISTENCY	X	
IDENTIFICATION INFORMATION	X	
2. TECHNICAL ACCURACY	X	

STEP, CAUTION, NOTE-SPECIFIC VERIFICATION

Are there any Step, CAUTION, or NOTE level discrepancies for this procedure?

X YES, DISCREPANCY SHEET #(s) 1, 2, 3 ____ NO

INDIAN POINT UNIT 2
EOP VERIFICATION FORM #2
DISCREPANCY SHEET NUMBER 1

Area of Concern: X written correctness
(Check Applicable) ____ technical accuracy

EOP: ES-0.4 REV.: 11-30-84 STEP NUMBER: 8a. RNO 1) (As applicable)

DISCREPANCY:

EOP should capitalize 'DO NOT ISOLATE ACCUMULATORS' to be consistent with previous steps (i.e. ES-0.3, Step 7).

EVALUATOR: C. R. Sterrett DATE: 12-27-84

RESOLUTION:

Revise EOP.

APPROVED: YES NO (circle one)

OPERATIONS STAFF MANAGER: _____ DATE: _____

RESOLUTION INCORPORATED BY: _____ DATE: _____

INDIAN POINT UNIT 2
EOP VERIFICATION FORM #2
DISCREPANCY SHEET NUMBER 2

Area of Concern: ____ written correctness
(Check Applicable) X technical accuracy

EOP: ES-0.4 REV.: 11-30-84 STEP NUMBER: 9c. (As applicable)

DISCREPANCY:

EOP states 'RCS pressure - less than 600 psig' while ERG states '800 psig'. Step justification should address the difference.

EVALUATOR: C. R. Sterrett DATE: 12-27-84

RESOLUTION:

Revise step justification.

APPROVED: YES NO (circle one)

OPERATIONS STAFF MANAGER: _____ DATE: _____

RESOLUTION INCORPORATED BY: _____ DATE: _____

INDIAN POINT UNIT 2
EOP VERIFICATION FORM #2
DISCREPANCY SHEET NUMBER 3

Area of Concern: ____ written correctness
(Check Applicable) X technical accuracy

EOP: ES-0.4 REV.: 11-30-84 STEP NUMBER: 14c. (As applicable)

DISCREPANCY:

EOP states 'RCS pressure - less than 450 psig' while ERG states '600 psig'. Step justification should address the difference.

EVALUATOR: C. R. Sterrett DATE: 12-27-84

RESOLUTION:

Revise step justification.

APPROVED: YES NO (circle one)

OPERATIONS STAFF MANAGER: _____ DATE: _____

RESOLUTION INCORPORATED BY: _____ DATE: _____

INDIAN POINT UNIT 2

EOP VERIFICATION FORM #1

EOP TITLE: Loss of Reactor or Secondary Coolant

EOP NUMBER: E-1 REVISION: 11-30-84

SCOPE OF VERIFICATION: Assessment Phase

EVALUATOR(S): C. R. Sterrett

EOP SOURCE DOCUMENTS USED:

1. WOG Generic ERGs Revision 1 (LP) and Background Documents
2. FSAR
3. Indian Point 2 Plant Specific Technical Guidelines August, 1984
4. Operations Administrative Directive 7, Rev. 10
5. Indian Point 2 Writers Guide for EOPs
6. Indian Point 2 System Descriptions

PROCEDURE-GENERAL VERIFICATION

1. WRITTEN CORRECTNESS

AREA	ACCEPTABLE	DISCREPANCY SHEET #(s)
LEGIBILITY		
EOP FORMAT CONSISTENCY		
IDENTIFICATION INFORMATION		
2. TECHNICAL ACCURACY		

STEP, CAUTION, NOTE-SPECIFIC VERIFICATION

Are there any Step, CAUTION, or NOTE level discrepancies for this procedure?

X YES, DISCREPANCY SHEET #(s) 1, 2 ____ NO

INDIAN POINT UNIT 2

EOP VERIFICATION FORM #2

DISCREPANCY SHEET NUMBER 1

Area of Concern: X written correctness
(Check Applicable) ____ technical accuracy

EOP: E-1 REV.: 11-30-84 STEP NUMBER: Caution (As applicable)
Before Step 5

DISCREPANCY:

Second bullet, follwing to following

EVALUATOR: C. R. Sterrett DATE: 1-2-85

RESOLUTION:

Correct EOP.

APPROVED: YES NO (circle one)

OPERATIONS STAFF MANAGER: _____ DATE: _____

RESOLUTION INCORPORATED BY: _____ DATE: _____

INDIAN POINT UNIT 2
EOP VERIFICATION FORM #2
DISCREPANCY SHEET NUMBER 3

Area of Concern: X written correctness
(Check Applicable) ____ technical accuracy

EOP: E-1 REV.: 11-30-84 STEP NUMBER: 6.CRNO (As applicable)

DISCREPANCY:

'Switches by bypass' should be 'switches to BYPASS'.

EVALUATOR: C. R. Sterrett DATE: 1-2-85

RESOLUTION:

Correct EOP.

APPROVED: YES NO (circle one)

OPERATIONS STAFF MANAGER: _____ DATE: _____

RESOLUTION INCORPORATED BY: _____ DATE: _____

INDIAN POINT UNIT 2

EOP VERIFICATION FORM #1

EOP TITLE: SI Termination

EOP NUMBER: ES-1.1 REVISION: 11-30-84

SCOPE OF VERIFICATION: Assessment Phase

EVALUATOR(S): C. R. Sterrett

EOP SOURCE DOCUMENTS USED:

1. WOG Generic ERGs Revision 1 (LP) and Background Documents
2. FSAR
3. Indian Point 2 Plant Specific Technical Guidelines August, 1984
4. Operations Administrative Directive 7, Rev. 10
5. Indian Point 2 Writers Guide for EOPs
6. Indian Point 2 System Descriptions

PROCEDURE-GENERAL VERIFICATION

1. WRITTEN CORRECTNESS

AREA	ACCEPTABLE	DISCREPANCY SHEET #(s)
LEGIBILITY	X	
EOP FORMAT CONSISTENCY	X	
IDENTIFICATION INFORMATION		1
2. TECHNICAL ACCURACY	X	

STEP, CAUTION, NOTE-SPECIFIC VERIFICATION

Are there any Step, CAUTION, or NOTE level discrepancies for this procedure?

____ YES, DISCREPANCY SHEET #(s) _____ X NO

INDIAN POINT UNIT 2

EOP VERIFICATION FORM #2

DISCREPANCY SHEET NUMBER 1

Area of Concern: ____ written correctness

(Check Applicable) X technical accuracy

EOP: ES-1.1 REV.: 11-30-84 STEP NUMBER: Cover Page (As applicable)
B. entry conditions

DISCREPANCY:

Entry condition 'FR-H.1, response to loss of secondary heat sink, Step 26' should be included to agree with ERGs.

EVALUATOR: C. R. Sterrett DATE: 1-3-85

RESOLUTION:

Revise EOP.

APPROVED: YES NO (circle one)

OPERATIONS STAFF MANAGER: _____ DATE: _____

RESOLUTION INCORPORATED BY: _____ DATE: _____

INDIAN POINT UNIT 2

EOP VERIFICATION FORM #1

EOP TITLE: Post LOCA Cooldown and Depressurization

EOP NUMBER: ES-1.2 REVISION: 11-30-84

SCOPE OF VERIFICATION: Assessment Phase

EVALUATOR(S): C. R. Sterrett

EOP SOURCE DOCUMENTS USED:

1. WOG Generic ERGs Revision 1 (LP) and Background Documents
2. FSAR
3. Indian Point 2 Plant Specific Technical Guidelines August, 1984
4. Operations Administrative Directive 7, Rev. 10
5. Indian Point 2 Writers Guide for EOPs
6. Indian Point 2 System Descriptions

PROCEDURE-GENERAL VERIFICATION

1. WRITTEN CORRECTNESS

AREA	ACCEPTABLE	DISCREPANCY SHEET #(s)
LEGIBILITY	X	
EOP FORMAT CONSISTENCY		2
IDENTIFICATION INFORMATION	X	
2. TECHNICAL ACCURACY	X	

STEP, CAUTION, NOTE-SPECIFIC VERIFICATION

Are there any Step, CAUTION, or NOTE level discrepancies for this procedure?

X YES, DISCREPANCY SHEET #(s) 1 ____ NO

INDIAN POINT UNIT 2

EOP VERIFICATION FORM #2

DISCREPANCY SHEET NUMBER 1

Area of Concern: ____ written correctness

(Check Applicable) X technical accuracy

EOP: ES-1.2 REV.: 11-30-84 STEP NUMBER: 1 (As applicable)

DISCREPANCY:

ERG Step 1b.RNO on 'diesel capacity to run charging pumps' was deleted from EOPs but not mentioned in the step justification.

EVALUATOR: C. R. Sterrett DATE: 1-5-85

RESOLUTION:

Revise step justification.

APPROVED: YES NO (circle one)

OPERATIONS STAFF MANAGER: _____ DATE: _____

RESOLUTION INCORPORATED BY: _____ DATE: _____

INDIAN POINT UNIT 2
EOP VERIFICATION FORM #2
DISCREPANCY SHEET NUMBER 2

Area of Concern: ____ written correctness
(Check Applicable) X technical accuracy

EOP: ES-1.2 REV.: 11-30-84 STEP NUMBER: 26 (As applicable)

DISCREPANCY:

ERGs require two values, normal and adverse containment. EOPs list only one value.

EVALUATOR: C. R. Sterrett DATE: 1-5-85

RESOLUTION:

Correct EOP.

APPROVED: YES NO (circle one)

OPERATIONS STAFF MANAGER: _____ DATE: _____

RESOLUTION INCORPORATED BY: _____ DATE: _____

INDIAN POINT UNIT 2

EOP VERIFICATION FORM #1

EOP TITLE: Transfer to Cold Leg Recirculation

EOP NUMBER: ES-1.3 REVISION: 11-30-84

SCOPE OF VERIFICATION: Assessment Phase

EVALUATOR(S): C. R. Sterrett

EOP SOURCE DOCUMENTS USED:

1. WOG Generic ERGs Revision 1 (LP) and Background Documents
2. FSAR
3. Indian Point 2 Plant Specific Technical Guidelines August, 1984
4. Operations Administrative Directive 7, Rev. 10
5. Indian Point 2 Writers Guide for EOPs
6. Indian Point 2 System Descriptions

PROCEDURE-GENERAL VERIFICATION

1. WRITTEN CORRECTNESS

AREA	ACCEPTABLE	DISCREPANCY SHEET #(s)
LEGIBILITY	X	
EOP FORMAT CONSISTENCY	X	
IDENTIFICATION INFORMATION	X	
2. TECHNICAL ACCURACY	X	

STEP, CAUTION, NOTE-SPECIFIC VERIFICATION

Are there any Step, CAUTION, or NOTE level discrepancies for this procedure?

____ YES, DISCREPANCY SHEET #(s) _____ X NO

INDIAN POINT UNIT 2

EOP VERIFICATION FORM #1

EOP TITLE: Transfer to Hot Leg Recirculation

EOP NUMBER: ES-1.4 REVISION: 11-30-84

SCOPE OF VERIFICATION: Assessment Phase

EVALUATOR(S): C. R. Sterrett

EOP SOURCE DOCUMENTS USED:

1. WOG Generic ERGs Revision 1 (LP) and Background Documents
2. FSAR
3. Indian Point 2 Plant Specific Technical Guidelines August, 1984
4. Operations Administrative Directive 7, Rev. 10
5. Indian Point 2 Writers Guide for EOPs
6. Indian Point 2 System Descriptions

PROCEDURE-GENERAL VERIFICATION

1. WRITTEN CORRECTNESS

AREA	ACCEPTABLE	DISCREPANCY SHEET #(s)
LEGIBILITY	X	
EOP FORMAT CONSISTENCY	X	
IDENTIFICATION INFORMATION	X	
2. TECHNICAL ACCURACY	X	

STEP, CAUTION, NOTE-SPECIFIC VERIFICATION

Are there any Step, CAUTION, or NOTE level discrepancies for this procedure?

____ YES, DISCREPANCY SHEET #(s) _____ X NO

INDIAN POINT UNIT 2

EOP VERIFICATION FORM #1

EOP TITLE: Faulted Steam Generator Isolation

EOP NUMBER: E-2 REVISION: 11-30-84

SCOPE OF VERIFICATION: Assessment Phase

EVALUATOR(S): C. R. Sterrett

EOP SOURCE DOCUMENTS USED:

1. WOG Generic ERGs Revision 1 (LP) and Background Documents
2. FSAR
3. Indian Point 2 Plant Specific Technical Guidelines August, 1984
4. Operations Administrative Directive 7, Rev. 10
5. Indian Point 2 Writers Guide for EOPs
6. Indian Point 2 System Descriptions

PROCEDURE-GENERAL VERIFICATION

1. WRITTEN CORRECTNESS

AREA	ACCEPTABLE	DISCREPANCY SHEET #(s)
LEGIBILITY	X	
EOP FORMAT CONSISTENCY		1
IDENTIFICATION INFORMATION	X	
2. TECHNICAL ACCURACY	X	

STEP, CAUTION, NOTE-SPECIFIC VERIFICATION

Are there any Step, CAUTION, or NOTE level discrepancies for this procedure?

____ YES, DISCREPANCY SHEET #(s) _____ X NO

INDIAN POINT UNIT 2

EOP VERIFICATION FORM #2

DISCREPANCY SHEET NUMBER 1

Area of Concern: X written correctness
(Check Applicable) ____ technical accuracy

EOP: E-2 REV.: 11-30-84 STEP NUMBER: 6b (As applicable)

DISCREPANCY:

'Main steamline recorder radiation' should be 'main steamline radiation recorder' to properly describe the recorder's function. This change affects other steps in this procedure.

EVALUATOR: C. R. Sterrett DATE: 1-7-85

RESOLUTION:

Revise EOPs.

APPROVED: YES NO (circle one)

OPERATIONS STAFF MANAGER: _____ DATE: _____

RESOLUTION INCORPORATED BY: _____ DATE: _____

INDIAN POINT UNIT 2

EOP VERIFICATION FORM #1

EOP TITLE: Steam Generator Tube Rupture

EOP NUMBER: E-3 REVISION: 11-30-84

SCOPE OF VERIFICATION: Assessment Phase

EVALUATOR(S): C. R. Sterrett

EOP SOURCE DOCUMENTS USED:

1. WOG Generic ERGs Revision 1 (LP) and Background Documents
2. FSAR
3. Indian Point 2 Plant Specific Technical Guidelines August, 1984
4. Operations Administrative Directive 7, Rev. 10
5. Indian Point 2 Writers Guide for EOPs
6. Indian Point 2 System Descriptions

PROCEDURE-GENERAL VERIFICATION

1. WRITTEN CORRECTNESS

AREA	ACCEPTABLE	DISCREPANCY SHEET #(s)
LEGIBILITY	X	
EOP FORMAT CONSISTENCY	X	
IDENTIFICATION INFORMATION		2

2. TECHNICAL ACCURACY X

STEP, CAUTION, NOTE-SPECIFIC VERIFICATION

Are there any Step, CAUTION, or NOTE level discrepancies for this procedure?

X YES, DISCREPANCY SHEET #(s) 1 ____ NO

INDIAN POINT UNIT 2

EOP VERIFICATION FORM #2

DISCREPANCY SHEET NUMBER 1

Area of Concern: ____ written correctness

(Check Applicable) X technical accuracy

EOP: E-3 REV.: 11-30-84 STEP NUMBER: 16 RNO (As applicable)

DISCREPANCY:

EOP states criteria of 100 psi delta while ERG does not quantify criteria. Step justification should address.

EVALUATOR: C. R. Sterrett DATE: 1-7-85

RESOLUTION:

Revise step justification.

APPROVED: YES NO (circle one)

OPERATIONS STAFF MANAGER: _____ DATE: _____

RESOLUTION INCORPORATED BY: _____ DATE: _____

INDIAN POINT UNIT 2
EOP VERIFICATION FORM #2
DISCREPANCY SHEET NUMBER 3

Area of Concern: X written correctness
(Check Applicable) ____ technical accuracy

EOP: E-3 REV.: 11-30-84 STEP NUMBER: 37 (As applicable)

DISCREPANCY:

Add 'Step 1' after the three procedures, consistent with ERGs.

EVALUATOR: C. R. Sterrett DATE: 1-7-85

RESOLUTION:

Revise EOP.

APPROVED: YES NO (circle one)

OPERATIONS STAFF MANAGER: _____ DATE: _____

RESOLUTION INCORPORATED BY: _____ DATE: _____

INDIAN POINT UNIT 2

EOP VERIFICATION FORM #1

EOP TITLE: Post-SGTR Cooldown Using Backfill

EOP NUMBER: ES-3.1 REVISION: 11-30-84

SCOPE OF VERIFICATION: Assessment Phase

EVALUATOR(S): C. R. Sterrett

EOP SOURCE DOCUMENTS USED:

1. WOG Generic ERGs Revision 1 (LP) and Background Documents
2. FSAR
3. Indian Point 2 Plant Specific Technical Guidelines August, 1984
4. Operations Administrative Directive 7, Rev. 10
5. Indian Point 2 Writers Guide for EOPs
6. Indian Point 2 System Descriptions

PROCEDURE-GENERAL VERIFICATION

1. WRITTEN CORRECTNESS

AREA	ACCEPTABLE	DISCREPANCY SHEET #(s)
LEGIBILITY	X	
EOP FORMAT CONSISTENCY	X	
IDENTIFICATION INFORMATION	X	
2. TECHNICAL ACCURACY	X	

STEP, CAUTION, NOTE-SPECIFIC VERIFICATION

Are there any Step, CAUTION, or NOTE level discrepancies for this procedure?

____ YES, DISCREPANCY SHEET #(s) _____ X NO

INDIAN POINT UNIT 2

EOP VERIFICATION FORM #1

EOP TITLE: Post-SGTR Cooldown Using Blowdown

EOP NUMBER: ES-3.2 REVISION: 11-30-84

SCOPE OF VERIFICATION: Assessment Phase

EVALUATOR(S): C. R. Sterrett

EOP SOURCE DOCUMENTS USED:

1. WOG Generic ERGs Revision 1 (LP) and Background Documents
2. FSAR
3. Indian Point 2 Plant Specific Technical Guidelines August, 1984
4. Operations Administrative Directive 7, Rev. 10
5. Indian Point 2 Writers Guide for EOPs
6. Indian Point 2 System Descriptions

PROCEDURE-GENERAL VERIFICATION

1. WRITTEN CORRECTNESS

AREA	ACCEPTABLE	DISCREPANCY SHEET #(s)
LEGIBILITY		1
EOP FORMAT CONSISTENCY	X	
IDENTIFICATION INFORMATION	X	
2. TECHNICAL ACCURACY	X	

STEP, CAUTION, NOTE-SPECIFIC VERIFICATION

Are there any Step, CAUTION, or NOTE level discrepancies for this procedure?

____ YES, DISCREPANCY SHEET #(s) _____ X NO

INDIAN POINT UNIT 2

EOP VERIFICATION FORM #2

DISCREPANCY SHEET NUMBER 1

Area of Concern: X written correctness
(Check Applicable) ____ technical accuracy

EOP: ES-3.2 REV.: 11-30-84 STEP NUMBER: - (As applicable)

DISCREPANCY:

Page 10 of 11 is misprinted. Heading is not readable.

EVALUATOR: C. R. Sterrett DATE: 1-7-85

RESOLUTION:

Correct EOP.

APPROVED: YES NO (circle one)

OPERATIONS STAFF MANAGER: _____ DATE: _____

RESOLUTION INCORPORATED BY: _____ DATE: _____

INDIAN POINT UNIT 2

EOP VERIFICATION FORM #1

EOP TITLE: Post-SGTR Cooldown Using Steam Dump

EOP NUMBER: ES-3.3 REVISION: 11-30-84

SCOPE OF VERIFICATION: Assessment Phase

EVALUATOR(S): C. R. Sterrett

EOP SOURCE DOCUMENTS USED:

1. WOG Generic ERGs Revision 1 (LP) and Background Documents
2. FSAR
3. Indian Point 2 Plant Specific Technical Guidelines August, 1984
4. Operations Administrative Directive 7, Rev. 10
5. Indian Point 2 Writers Guide for EOPs
6. Indian Point 2 System Descriptions

PROCEDURE-GENERAL VERIFICATION

1. WRITTEN CORRECTNESS

AREA	ACCEPTABLE	DISCREPANCY SHEET #(s)
LEGIBILITY		
EOP FORMAT CONSISTENCY		
IDENTIFICATION INFORMATION		
2. TECHNICAL ACCURACY		

STEP, CAUTION, NOTE-SPECIFIC VERIFICATION

Are there any Step, CAUTION, or NOTE level discrepancies for this procedure?

X YES, DISCREPANCY SHEET #(s) 1, 2 ____ NO

INDIAN POINT UNIT 2

EOP VERIFICATION FORM #2

DISCREPANCY SHEET NUMBER 1

Area of Concern: X written correctness
(Check Applicable) ____ technical accuracy

EOP: ES-3.3 REV.: 11-30-84 STEP NUMBER: 6a. (As applicable)

DISCREPANCY:

Delete words 'on the next page'. Since the table is located directly below this statement.

EVALUATOR: C. R. Sterrett DATE: 1-7-85

RESOLUTION:

Revise EOP.

APPROVED: YES NO (circle one)

OPERATIONS STAFF MANAGER: _____ DATE: _____

RESOLUTION INCORPORATED BY: _____ DATE: _____

INDIAN POINT UNIT 2
EOP VERIFICATION FORM #2
DISCREPANCY SHEET NUMBER 2

Area of Concern: ____ written correctness
(Check Applicable) X technical accuracy

EOP: ES-3.3 REV.: 11-30-84 STEP NUMBER: 9 (As applicable)

DISCREPANCY:

Step justification should address addition of MSIV bypass valves information. ERGs do not discuss bypass valves.

EVALUATOR: C. R. Sterrett DATE: 1-7-85

RESOLUTION:

Revise step justification.

APPROVED: YES NO (circle one)

OPERATIONS STAFF MANAGER: _____ DATE: _____

RESOLUTION INCORPORATED BY: _____ DATE: _____

INDIAN POINT UNIT 2

EOP VERIFICATION FORM #1

EOP TITLE: Loss of All AC Power

EOP NUMBER: ECA-0.0 REVISION: 11-30-84

SCOPE OF VERIFICATION: Assessment Phase

EVALUATOR(S): C. R. Sterrett

EOP SOURCE DOCUMENTS USED:

1. WOG Generic ERGs Revision 1 (LP) and Background Documents
2. FSAR
3. Indian Point 2 Plant Specific Technical Guidelines August, 1984
4. Operations Administrative Directive 7, Rev. 10
5. Indian Point 2 Writers Guide for EOPs
6. Indian Point 2 System Descriptions

PROCEDURE-GENERAL VERIFICATION

1. WRITTEN CORRECTNESS

AREA	ACCEPTABLE	DISCREPANCY SHEET #(s)
LEGIBILITY	X	
EOP FORMAT CONSISTENCY	X	
IDENTIFICATION INFORMATION		2
2. TECHNICAL ACCURACY	X	

STEP, CAUTION, NOTE-SPECIFIC VERIFICATION

Are there any Step, CAUTION, or NOTE level discrepancies for this procedure?

X YES, DISCREPANCY SHEET #(s) 1 ____ NO

INDIAN POINT UNIT 2
EOP VERIFICATION FORM #2
DISCREPANCY SHEET NUMBER 1

Area of Concern: ____ written correctness
(Check Applicable) X technical accuracy

EOP: ECA-0.0 REV.: 11-30-84 STEP NUMBER: 3b + RNO (As applicable)

DISCREPANCY:

EOP uses 'valve' (singular) while ERG uses 'valves'. EFD shows two letdown isolation valves and one excess letdown isolation valve. Step justification should address.

EVALUATOR: C. R. Sterrett DATE: 1-7-85

RESOLUTION:

Revise step justification.

APPROVED: YES NO (circle one)

OPERATIONS STAFF MANAGER: _____ DATE: _____

RESOLUTION INCORPORATED BY: _____ DATE: _____

INDIAN POINT UNIT 2
EOP VERIFICATION FORM #2
DISCREPANCY SHEET NUMBER 2

Area of Concern: ____ written correctness
(Check Applicable) X technical accuracy

EOP: ECA-0.0 REV.: 11-30-84 STEP NUMBER: 26 (As applicable)

DISCREPANCY:

EOP ordering of Steps 26 and 27 is reversed from ERG ordering. Step justification should address.

EVALUATOR: C. R. Sterrett DATE: 1-7-85

RESOLUTION:

Revise step justification.

APPROVED: YES NO (circle one)

OPERATIONS STAFF MANAGER: _____ DATE: _____

RESOLUTION INCORPORATED BY: _____ DATE: _____

INDIAN POINT UNIT 2

EOP VERIFICATION FORM #1

EOP TITLE: Loss of All AC Power Recovery Without SI Required

EOP NUMBER: ECA-0.1 REVISION: 11-30-84

SCOPE OF VERIFICATION: Assessment Phase

EVALUATOR(S): C. R. Sterrett

EOP SOURCE DOCUMENTS USED:

1. WOG Generic ERGs Revision 1 (LP) and Background Documents
2. FSAR
3. Indian Point 2 Plant Specific Technical Guidelines August, 1984
4. Operations Administrative Directive 7, Rev. 10
5. Indian Point 2 Writers Guide for EOPs
6. Indian Point 2 System Descriptions

PROCEDURE-GENERAL VERIFICATION

1. WRITTEN CORRECTNESS

AREA	ACCEPTABLE	DISCREPANCY SHEET #(s)
LEGIBILITY	X	
EOP FORMAT CONSISTENCY	X	
IDENTIFICATION INFORMATION	X	
2. TECHNICAL ACCURACY	X	

STEP, CAUTION, NOTE-SPECIFIC VERIFICATION

Are there any Step, CAUTION, or NOTE level discrepancies for this procedure?

X YES, DISCREPANCY SHEET #(s) 1 ____ NO

INDIAN POINT UNIT 2
EOP VERIFICATION FORM #2
DISCREPANCY SHEET NUMBER 1

Area of Concern: ____ written correctness
(Check Applicable) X technical accuracy

EOP: ECA-0.1 REV.: 11-30-84 STEP NUMBER: Caution (As applicable)
Before Step 15

DISCREPANCY:

ERG Caution was deleted from EOP, but not addressed by step justification.

EVALUATOR: C. R. Sterrett DATE: 1-7-85

RESOLUTION:

Revise step justification.

APPROVED: YES NO (circle one)

OPERATIONS STAFF MANAGER: _____ DATE: _____

RESOLUTION INCORPORATED BY: _____ DATE: _____

INDIAN POINT UNIT 2

EOP VERIFICATION FORM #1

EOP TITLE: Loss of All AC Power Recovery With SI Required

EOP NUMBER: ECA-0.2 REVISION: 11-30-84

SCOPE OF VERIFICATION: Assessment Phase

EVALUATOR(S): C. R. Sterrett

EOP SOURCE DOCUMENTS USED:

1. WOG Generic ERGs Revision 1 (LP) and Background Documents
2. FSAR
3. Indian Point 2 Plant Specific Technical Guidelines August, 1984
4. Operations Administrative Directive 7, Rev. 10
5. Indian Point 2 Writers Guide for EOPs
6. Indian Point 2 System Descriptions

PROCEDURE-GENERAL VERIFICATION

1. WRITTEN CORRECTNESS

AREA	ACCEPTABLE	DISCREPANCY SHEET #(s)
LEGIBILITY	X	
EOP FORMAT CONSISTENCY	X	
IDENTIFICATION INFORMATION	X	
2. TECHNICAL ACCURACY	X	

STEP, CAUTION, NOTE-SPECIFIC VERIFICATION

Are there any Step, CAUTION, or NOTE level discrepancies for this procedure?

X YES, DISCREPANCY SHEET #(s) 1 ____ NO

INDIAN POINT UNIT 2
EOP VERIFICATION FORM #2
DISCREPANCY SHEET NUMBER 1

Area of Concern: X written correctness
(Check Applicable) ____ technical accuracy

EOP: ECA-0.2 REV.: 11-30-84 STEP NUMBER: 9 RNO (As applicable)

DISCREPANCY:

Statement 'verify CCW supply valves - OPEN' appears in both expected response and RNO columns. RNO statement should be deleted.

EVALUATOR: C. R. Sterrett DATE: 1-7-85

RESOLUTION:

Revise EOP.

APPROVED: YES NO (circle one)

OPERATIONS STAFF MANAGER: _____ DATE: _____

RESOLUTION INCORPORATED BY: _____ DATE: _____

INDIAN POINT UNIT 2

EOP VERIFICATION FORM #1

EOP TITLE: Loss of Emergency Coolant Recirculation

EOP NUMBER: ECA-1.1 REVISION: 11-30-84

SCOPE OF VERIFICATION: Assessment Phase

EVALUATOR(S): C. R. Sterrett

EOP SOURCE DOCUMENTS USED:

1. WOG Generic ERGs Revision 1 (LP) and Background Documents
2. FSAR
3. Indian Point 2 Plant Specific Technical Guidelines August, 1984
4. Operations Administrative Directive 7, Rev. 10
5. Indian Point 2 Writers Guide for EOPs
6. Indian Point 2 System Descriptions

PROCEDURE-GENERAL VERIFICATION

1. WRITTEN CORRECTNESS

AREA	ACCEPTABLE	DISCREPANCY SHEET #(s)
LEGIBILITY	X	
EOP FORMAT CONSISTENCY	X	
IDENTIFICATION INFORMATION	X	
2. TECHNICAL ACCURACY	X	

STEP, CAUTION, NOTE-SPECIFIC VERIFICATION

Are there any Step, CAUTION, or NOTE level discrepancies for this procedure?

X YES, DISCREPANCY SHEET #(s) 1, 2 ____ NO

INDIAN POINT UNIT 2
EOP VERIFICATION FORM #2
DISCREPANCY SHEET NUMBER 1

Area of Concern: X written correctness
(Check Applicable) ____ technical accuracy

EOP: ECA-1.1 REV.: 11-30-84 STEP NUMBER: 16 (As applicable)

DISCREPANCY:

Delete the (°) symbol from 690° psig.

EVALUATOR: C. R. Sterrett DATE: 1-7-85

RESOLUTION:

Correct EOP.

APPROVED: YES NO (circle one)

OPERATIONS STAFF MANAGER: _____ DATE: _____

RESOLUTION INCORPORATED BY: _____ DATE: _____

INDIAN POINT UNIT 2
EOP VERIFICATION FORM #2
DISCREPANCY SHEET NUMBER 2

Area of Concern: ____ written correctness
(Check Applicable) X technical accuracy

EOP: ECA-1.1 REV.: 11-30-84 STEP NUMBER: 22b RNO Second Bullet (As applicable)

DISCREPANCY:

ERG mentions RHR system, while EOP does not. Step justification should address.

EVALUATOR: C. R. Sterrett DATE: 1-7-85

RESOLUTION:

Revise EOP.

APPROVED: YES NO (circle one)

OPERATIONS STAFF MANAGER: _____ DATE: _____

RESOLUTION INCORPORATED BY: _____ DATE: _____

INDIAN POINT UNIT 2

EOP VERIFICATION FORM #1

EOP TITLE: LOCA Outside Containment

EOP NUMBER: ECA-1.2 REVISION: 11-30-84

SCOPE OF VERIFICATION: Assessment Phase

EVALUATOR(S): C. R. Sterrett

EOP SOURCE DOCUMENTS USED:

1. WOG Generic ERGs Revision 1 (LP) and Background Documents
2. FSAR
3. Indian Point 2 Plant Specific Technical Guidelines August, 1984
4. Operations Administrative Directive 7, Rev. 10
5. Indian Point 2 Writers Guide for EOPs
6. Indian Point 2 System Descriptions

PROCEDURE-GENERAL VERIFICATION

1. WRITTEN CORRECTNESS

AREA	ACCEPTABLE	DISCREPANCY SHEET #(s)
LEGIBILITY	X	
EOP FORMAT CONSISTENCY	X	
IDENTIFICATION INFORMATION	X	
2. TECHNICAL ACCURACY	X	

STEP, CAUTION, NOTE-SPECIFIC VERIFICATION

Are there any Step, CAUTION, or NOTE level discrepancies for this procedure?

X YES, DISCREPANCY SHEET #(s) 1 ____ NO

INDIAN POINT UNIT 2

EOP VERIFICATION FORM #2

DISCREPANCY SHEET NUMBER 1

Area of Concern: ____ written correctness

(Check Applicable) X technical accuracy

EOP: ECA-1.2 REV.: 11-30-84 STEP NUMBER: Caution (As applicable)
Before Step 1

DISCREPANCY:

Environmental conditions Caution was added to EOP, however step justification did not address.

EVALUATOR: C. R. Sterrett DATE: 1-8-85

RESOLUTION:

Revise step justification.

APPROVED: YES NO (circle one)

OPERATIONS STAFF MANAGER: _____ DATE: _____

RESOLUTION INCORPORATED BY: _____ DATE: _____

INDIAN POINT UNIT 2

EOP VERIFICATION FORM #1

EOP TITLE: Uncontrolled Depressurization of All Steam Generators

EOP NUMBER: ECA-2.1 REVISION: 11-30-84

SCOPE OF VERIFICATION: Assessment Phase

EVALUATOR(S): C. R. Sterrett

EOP SOURCE DOCUMENTS USED:

1. WOG Generic ERGs Revision 1 (LP) and Background Documents
2. FSAR
3. Indian Point 2 Plant Specific Technical Guidelines August, 1984
4. Operations Administrative Directive 7, Rev. 10
5. Indian Point 2 Writers Guide for EOPs
6. Indian Point 2 System Descriptions

PROCEDURE-GENERAL VERIFICATION

1. WRITTEN CORRECTNESS

AREA	ACCEPTABLE	DISCREPANCY SHEET #(s)
LEGIBILITY	X	
EOP FORMAT CONSISTENCY	X	
IDENTIFICATION INFORMATION	X	
2. TECHNICAL ACCURACY	X	

STEP, CAUTION, NOTE-SPECIFIC VERIFICATION

Are there any Step, CAUTION, or NOTE level discrepancies for this procedure?

X YES, DISCREPANCY SHEET #(s) 1, 2, 3, 4 ____ NO

INDIAN POINT UNIT 2
EOP VERIFICATION FORM #2
DISCREPANCY SHEET NUMBER 1

Area of Concern: ____ written correctness
(Check Applicable) X technical accuracy

EOP: ECA-2.1 REV.: 11-30-84 STEP NUMBER: 3 (As applicable)

DISCREPANCY:

EOP deleted NOTE before Step 3, however step justification did not address.

EVALUATOR: C. R. Sterrett DATE: 1-8-85

RESOLUTION:

EOP correct as stated. ERG revised via ERG maintenance program.

APPROVED: YES NO (circle one)

OPERATIONS STAFF MANAGER: _____ DATE: _____

RESOLUTION INCORPORATED BY: _____ DATE: _____

INDIAN POINT UNIT 2

EOP VERIFICATION FORM #2

DISCREPANCY SHEET NUMBER 2

Area of Concern: ____ written correctness

(Check Applicable) X technical accuracy

EOP: ECA-2.1 REV.: 11-30-84 STEP NUMBER: 5b RNO (As applicable)

DISCREPANCY:

Psig setpoint not inserted.

EVALUATOR: C. R. Sterrett DATE: 1-8-85

RESOLUTION:

Revise EOP.

APPROVED: YES NO (circle one)

OPERATIONS STAFF MANAGER: _____ DATE: _____

RESOLUTION INCORPORATED BY: _____ DATE: _____

INDIAN POINT UNIT 2
EOP VERIFICATION FORM #2
DISCREPANCY SHEET NUMBER 3

Area of Concern: ____ written correctness
(Check Applicable) X technical accuracy

EOP: ECA-2.1 REV.: 11-30-84 STEP NUMBER: 13c RNO (As applicable)

DISCREPANCY:

EOP Step 13 deletes ERG section on 'try to stabilize RCS pressure...' without step justification.

EVALUATOR: C. R. Sterrett DATE: 1-8-85

RESOLUTION:

Revise step justification.

APPROVED: YES NO (circle one)

OPERATIONS STAFF MANAGER: _____ DATE: _____

RESOLUTION INCORPORATED BY: _____ DATE: _____

INDIAN POINT UNIT 2

EOP VERIFICATION FORM #2

DISCREPANCY SHEET NUMBER 4

Area of Concern: ____ written correctness

(Check Applicable) X technical accuracy

EOP: ECA-2.1 REV.: 11-30-84 STEP NUMBER: 23a,b,RNO (As applicable)

DISCREPANCY:

ERG says go to 'control PRZR pressure' while EOP says go to 'check all AC busses'.

EVALUATOR: C. R. Sterrett DATE: 1-8-85

RESOLUTION:

Revise EOP.

APPROVED: YES NO (circle one)

OPERATIONS STAFF MANAGER: _____ DATE: _____

RESOLUTION INCORPORATED BY: _____ DATE: _____

INDIAN POINT UNIT 2

EOP VERIFICATION FORM #1

EOP TITLE: SGTR With Loss of Reactor Coolant - Subcooled Recovery Desired

EOP NUMBER: ECA-3.1 REVISION: 11-30-84

SCOPE OF VERIFICATION: Assessment Phase

EVALUATOR(S): C. R. Sterrett

EOP SOURCE DOCUMENTS USED:

1. WOG Generic ERGs Revision 1 (LP) and Background Documents
2. FSAR
3. Indian Point 2 Plant Specific Technical Guidelines August, 1984
4. Operations Administrative Directive 7, Rev. 10
5. Indian Point 2 Writers Guide for EOPs
6. Indian Point 2 System Descriptions

PROCEDURE-GENERAL VERIFICATION

1. WRITTEN CORRECTNESS

AREA	ACCEPTABLE	DISCREPANCY SHEET #(s)
LEGIBILITY	X	
EOP FORMAT CONSISTENCY	X	
IDENTIFICATION INFORMATION	X	
2. TECHNICAL ACCURACY	X	

STEP, CAUTION, NOTE-SPECIFIC VERIFICATION

Are there any Step, CAUTION, or NOTE level discrepancies for this procedure?

____ YES, DISCREPANCY SHEET #(s) _____ X NO

INDIAN POINT UNIT 2

EOP VERIFICATION FORM #1

EOP TITLE: SGTR With Loss of Reactor Coolant - Saturated Recovery Desired

EOP NUMBER: ECA-3.2 REVISION: 11-30-84

SCOPE OF VERIFICATION: Assessment Phase

EVALUATOR(S): C. R. Sterrett

EOP SOURCE DOCUMENTS USED:

1. WOG Generic ERGs Revision 1 (LP) and Background Documents
2. FSAR
3. Indian Point 2 Plant Specific Technical Guidelines August, 1984
4. Operations Administrative Directive 7, Rev. 10
5. Indian Point 2 Writers Guide for EOPs
6. Indian Point 2 System Descriptions

PROCEDURE-GENERAL VERIFICATION

1. WRITTEN CORRECTNESS

AREA	ACCEPTABLE	DISCREPANCY SHEET #(s)
LEGIBILITY	X	
EOP FORMAT CONSISTENCY		1
IDENTIFICATION INFORMATION	X	
2. TECHNICAL ACCURACY	X	

STEP, CAUTION, NOTE-SPECIFIC VERIFICATION

Are there any Step, CAUTION, or NOTE level discrepancies for this procedure?

X YES, DISCREPANCY SHEET #(s) 2 ____ NO

INDIAN POINT UNIT 2
EOP VERIFICATION FORM #2
DISCREPANCY SHEET NUMBER 1

Area of Concern: ____ written correctness
(Check Applicable) X technical accuracy

EOP: ECA-3.2 REV.: 11-30-84 STEP NUMBER: Caution Before Step 1 (As applicable)

DISCREPANCY:

Third EOP Caution is an ERG Note.

EVALUATOR: C. R. Sterrett DATE: 1-8-85

RESOLUTION:

Revise EOP.

APPROVED: YES NO (circle one)

OPERATIONS STAFF MANAGER: _____ DATE: _____

RESOLUTION INCORPORATED BY: _____ DATE: _____

INDIAN POINT UNIT 2

EOP VERIFICATION FORM #2

DISCREPANCY SHEET NUMBER 2

Area of Concern: X written correctness
(Check Applicable) ____ technical accuracy

EOP: ECA-3.2 REV.: 11-30-84 STEP NUMBER: 26 (As applicable)

DISCREPANCY:

Second bullet, 'wter' should be 'water'.

EVALUATOR: C. R. Sterrett DATE: 1-8-85

RESOLUTION:

Correct EOP.

APPROVED: YES NO (circle one)

OPERATIONS STAFF MANAGER: _____ DATE: _____

RESOLUTION INCORPORATED BY: _____ DATE: _____

INDIAN POINT UNIT 2

EOP VERIFICATION FORM #1

EOP TITLE: SGTR Without Pressurizer Pressure Control

EOP NUMBER: ECA-3.3 REVISION: 11-30-84

SCOPE OF VERIFICATION: Assessment Phase

EVALUATOR(S): C. R. Sterrett

EOP SOURCE DOCUMENTS USED:

1. WOG Generic ERGs Revision 1 (LP) and Background Documents
2. FSAR
3. Indian Point 2 Plant Specific Technical Guidelines August, 1984
4. Operations Administrative Directive 7, Rev. 10
5. Indian Point 2 Writers Guide for EOPs
6. Indian Point 2 System Descriptions

PROCEDURE-GENERAL VERIFICATION

1. WRITTEN CORRECTNESS

AREA	ACCEPTABLE	DISCREPANCY SHEET #(s)
LEGIBILITY	X	
EOP FORMAT CONSISTENCY	X	
IDENTIFICATION INFORMATION	X	
2. TECHNICAL ACCURACY	X	

STEP, CAUTION, NOTE-SPECIFIC VERIFICATION

Are there any Step, CAUTION, or NOTE level discrepancies for this procedure?

X YES, DISCREPANCY SHEET #(s) 1 ____ NO

INDIAN POINT UNIT 2

EOP VERIFICATION FORM #2

DISCREPANCY SHEET NUMBER 1

Area of Concern: X written correctness
(Check Applicable) ____ technical accuracy

EOP: ECA-3.3 REV.: 11-30-84 STEP NUMBER: 12b RNO (As applicable)

DISCREPANCY:

Delete the word 'valve' after VCT to agree with ERG.

EVALUATOR: C. R. Sterrett DATE: 1-8-85

RESOLUTION:

Revise EOP.

APPROVED: YES NO (circle one)

OPERATIONS STAFF MANAGER: _____ DATE: _____

RESOLUTION INCORPORATED BY: _____ DATE: _____

INDIAN POINT UNIT 2

EOP VERIFICATION FORM #1

EOP TITLE: Status Trees

EOP NUMBER: F-0 REVISION: 11-30-84

SCOPE OF VERIFICATION: Assessment Phase

EVALUATOR(S): C. R. Sterrett

EOP SOURCE DOCUMENTS USED:

1. WOG Generic ERGs Revision 1 (LP) and Background Documents
2. FSAR
3. Indian Point 2 Plant Specific Technical Guidelines August, 1984
4. Operations Administrative Directive 7, Rev. 10
5. Indian Point 2 Writers Guide for EOPs
6. Indian Point 2 System Descriptions

PROCEDURE-GENERAL VERIFICATION

1. WRITTEN CORRECTNESS

AREA	ACCEPTABLE	DISCREPANCY SHEET #(s)
LEGIBILITY		1
EOP FORMAT CONSISTENCY	X	
IDENTIFICATION INFORMATION		2
2. TECHNICAL ACCURACY	X	

STEP, CAUTION, NOTE-SPECIFIC VERIFICATION

Are there any Step, CAUTION, or NOTE level discrepancies for this procedure?

____ YES, DISCREPANCY SHEET #(s) _____ X NO

INDIAN POINT UNIT 2

EOP VERIFICATION FORM #2

DISCREPANCY SHEET NUMBER 1

Area of Concern: X written correctness
(Check Applicable) ____ technical accuracy

EOP: Status Tree REV.: 11-30-84 STEP NUMBER: All (As applicable)

DISCREPANCY:

Printing crosses vertical lines in several places. Difficult to read.

EVALUATOR: C. R. Sterrett DATE: 1-8-85

RESOLUTION:

Revise status tree.

APPROVED: YES NO (circle one)

OPERATIONS STAFF MANAGER: _____ DATE: _____

RESOLUTION INCORPORATED BY: _____ DATE: _____

INDIAN POINT UNIT 2

EOP VERIFICATION FORM #2

DISCREPANCY SHEET NUMBER 2

Area of Concern: X written correctness
(Check Applicable) ____ technical accuracy

EOP: Status Tree REV.: 11-30-84 STEP NUMBER: F-0.4 (As applicable)

DISCREPANCY:

Status Tree F-0.4 does not refer to Figure F-0.4-1, as per EOP.

EVALUATOR: C. R. Sterrett DATE: 1-8-85

RESOLUTION:

Revise status tree.

APPROVED: YES NO (circle one)

OPERATIONS STAFF MANAGER: _____ DATE: _____

RESOLUTION INCORPORATED BY: _____ DATE: _____

INDIAN POINT UNIT 2

EOP VERIFICATION FORM #1

EOP TITLE: Response to Nuclear Power Generation/ATWS

EOP NUMBER: FR-S.1 REVISION: 11-30-84

SCOPE OF VERIFICATION: Assessment Phase

EVALUATOR(S): C. R. Sterrett

EOP SOURCE DOCUMENTS USED:

1. WOG Generic ERGs Revision 1 (LP) and Background Documents
2. FSAR
3. Indian Point 2 Plant Specific Technical Guidelines August, 1984
4. Operations Administrative Directive 7, Rev. 10
5. Indian Point 2 Writers Guide for EOPs
6. Indian Point 2 System Descriptions

PROCEDURE-GENERAL VERIFICATION

1. WRITTEN CORRECTNESS

AREA	ACCEPTABLE	DISCREPANCY SHEET #(s)
LEGIBILITY	X	
EOP FORMAT CONSISTENCY	X	
IDENTIFICATION INFORMATION	X	
2. TECHNICAL ACCURACY	X	

STEP, CAUTION, NOTE-SPECIFIC VERIFICATION

Are there any Step, CAUTION, or NOTE level discrepancies for this procedure?

____ YES, DISCREPANCY SHEET #(s) _____ X NO

INDIAN POINT UNIT 2

EOP VERIFICATION FORM #1

EOP TITLE: Response to Loss of Core Shutdown

EOP NUMBER: FR-S.2 REVISION: 11-30-84

SCOPE OF VERIFICATION: Assessment Phase

EVALUATOR(S): C. R. Sterrett

EOP SOURCE DOCUMENTS USED:

1. WOG Generic ERGs Revision 1 (LP) and Background Documents
2. FSAR
3. Indian Point 2 Plant Specific Technical Guidelines August, 1984
4. Operations Administrative Directive 7, Rev. 10
5. Indian Point 2 Writers Guide for EOPs
6. Indian Point 2 System Descriptions

PROCEDURE-GENERAL VERIFICATION

1. WRITTEN CORRECTNESS

AREA	ACCEPTABLE	DISCREPANCY SHEET #(s)
LEGIBILITY	X	
EOP FORMAT CONSISTENCY	X	
IDENTIFICATION INFORMATION	X	
2. TECHNICAL ACCURACY	X	

STEP, CAUTION, NOTE-SPECIFIC VERIFICATION

Are there any Step, CAUTION, or NOTE level discrepancies for this procedure?

____ YES, DISCREPANCY SHEET #(s) _____ X NO

INDIAN POINT UNIT 2

EOP VERIFICATION FORM #1

EOP TITLE: Response to Inadequate Core Cooling

EOP NUMBER: FR-C.1 REVISION: 11-30-84

SCOPE OF VERIFICATION: Assessment Phase

EVALUATOR(S): C. R. Sterrett

EOP SOURCE DOCUMENTS USED:

1. WOG Generic ERGs Revision 1 (LP) and Background Documents
2. FSAR
3. Indian Point 2 Plant Specific Technical Guidelines August, 1984
4. Operations Administrative Directive 7, Rev. 10
5. Indian Point 2 Writers Guide for EOPs
6. Indian Point 2 System Descriptions

PROCEDURE-GENERAL VERIFICATION

1. WRITTEN CORRECTNESS

AREA	ACCEPTABLE	DISCREPANCY SHEET #(s)
LEGIBILITY	X	
EOP FORMAT CONSISTENCY	X	
IDENTIFICATION INFORMATION	X	
2. TECHNICAL ACCURACY	X	

STEP, CAUTION, NOTE-SPECIFIC VERIFICATION

Are there any Step, CAUTION, or NOTE level discrepancies for this procedure?

X YES, DISCREPANCY SHEET #(s) 1, 2 ____ NO

INDIAN POINT UNIT 2

EOP VERIFICATION FORM #2

DISCREPANCY SHEET NUMBER 1

Area of Concern: ____ written correctness

(Check Applicable) X technical accuracy

EOP: FR-C.1 REV.: 11-30-84 STEP NUMBER: Caution (As applicable)
Before Step 1

DISCREPANCY:

Enter time value in place of (2).

EVALUATOR: C. R. Sterrett DATE: 1-8-85

RESOLUTION:

Revise EOP.

APPROVED: YES NO (circle one)

OPERATIONS STAFF MANAGER: _____ DATE: _____

RESOLUTION INCORPORATED BY: _____ DATE: _____

INDIAN POINT UNIT 2

EOP VERIFICATION FORM #2

DISCREPANCY SHEET NUMBER 2

Area of Concern: ____ written correctness

(Check Applicable) X technical accuracy

EOP: FR-C.1 REV.: 11-30-84 STEP NUMBER: 8b (As applicable)

DISCREPANCY:

EOP uses 4% while ERG uses 6.0%. Step justification should address.

EVALUATOR: C. R. Sterrett DATE: 1-8-85

RESOLUTION:

Revise step justification..

APPROVED: YES NO (circle one)

OPERATIONS STAFF MANAGER: _____ DATE: _____

RESOLUTION INCORPORATED BY: _____ DATE: _____

INDIAN POINT UNIT 2

EOP VERIFICATION FORM #1

EOP TITLE: Response to Degraded Core Cooling

EOP NUMBER: FR-C.2 REVISION: 11-30-84

SCOPE OF VERIFICATION: Assessment Phase

EVALUATOR(S): C. R. Sterrett

EOP SOURCE DOCUMENTS USED:

1. WOG Generic ERGs Revision 1 (LP) and Background Documents
2. FSAR
3. Indian Point 2 Plant Specific Technical Guidelines August, 1984
4. Operations Administrative Directive 7, Rev. 10
5. Indian Point 2 Writers Guide for EOPs
6. Indian Point 2 System Descriptions

PROCEDURE-GENERAL VERIFICATION

1. WRITTEN CORRECTNESS

AREA	ACCEPTABLE	DISCREPANCY SHEET #(s)
LEGIBILITY	X	
EOP FORMAT CONSISTENCY	X	
IDENTIFICATION INFORMATION	X	
2. TECHNICAL ACCURACY	X	

STEP, CAUTION, NOTE-SPECIFIC VERIFICATION

Are there any Step, CAUTION, or NOTE level discrepancies for this procedure?

X YES, DISCREPANCY SHEET #(s) 1, 2, 3 ____ NO

INDIAN POINT UNIT 2

EOP VERIFICATION FORM #2

DISCREPANCY SHEET NUMBER 1

Area of Concern: ____ written correctness

(Check Applicable) X technical accuracy

EOP: FR-C.2 REV.: 11-30-84 STEP NUMBER: 2C (As applicable)

DISCREPANCY:

EOP description 'RHR SI pump' should be 'RHR pump' to be consistent with ERGs.

EVALUATOR: C. R. Sterrett DATE: 1-8-85

RESOLUTION:

Revise EOP.

APPROVED: YES NO (circle one)

OPERATIONS STAFF MANAGER: _____ DATE: _____

RESOLUTION INCORPORATED BY: _____ DATE: _____

INDIAN POINT UNIT 2
EOP VERIFICATION FORM #2
DISCREPANCY SHEET NUMBER 2

Area of Concern: ____ written correctness
(Check Applicable) X technical accuracy

EOP: FR-C.2 REV.: 11-30-84 STEP NUMBER: 3 (As applicable)

DISCREPANCY:

ERG Step 3c, Block Valve Open, was deleted from EOP Step 3. Step justification should address.

EVALUATOR: C. R. Sterrett DATE: 1-8-85

RESOLUTION:

Revise step justification.

APPROVED: YES NO (circle one)

OPERATIONS STAFF MANAGER: _____ DATE: _____

RESOLUTION INCORPORATED BY: _____ DATE: _____

INDIAN POINT UNIT 2
EOP VERIFICATION FORM #2
DISCREPANCY SHEET NUMBER 3

Area of Concern: ____ written correctness
(Check Applicable) X technical accuracy

EOP: FR-C.2 REV.: 11-30-84 STEP NUMBER: Caution (As applicable)
Before Step 11

DISCREPANCY:

Fill in value for (14) and heat exchanger should be plural.

EVALUATOR: C. R. Sterrett DATE: 1-8-85

RESOLUTION:

Revise EOP.

APPROVED: YES NO (circle one)

OPERATIONS STAFF MANAGER: _____ DATE: _____

RESOLUTION INCORPORATED BY: _____ DATE: _____

INDIAN POINT UNIT 2

EOP VERIFICATION FORM #1

EOP TITLE: Response to Saturated Core Conditions

EOP NUMBER: FR-C.3 REVISION: _____

SCOPE OF VERIFICATION: Assessment Phase

EVALUATOR(S): C. R. Sterrett

EOP SOURCE DOCUMENTS USED:

1. WOG Generic ERGs Revision 1 (LP) and Background Documents
2. FSAR
3. Indian Point 2 Plant Specific Technical Guidelines August, 1984
4. Operations Administrative Directive 7, Rev. 10
5. Indian Point 2 Writers Guide for EOPs
6. Indian Point 2 System Descriptions

PROCEDURE-GENERAL VERIFICATION

1. WRITTEN CORRECTNESS

AREA	ACCEPTABLE	DISCREPANCY SHEET #(s)
LEGIBILITY	X	
EOP FORMAT CONSISTENCY	X	
IDENTIFICATION INFORMATION	X	
2. TECHNICAL ACCURACY	X	

STEP, CAUTION, NOTE-SPECIFIC VERIFICATION

Are there any Step, CAUTION, or NOTE level discrepancies for this procedure?

X YES, DISCREPANCY SHEET #(s) 1 ____ NO

INDIAN POINT UNIT 2
EOP VERIFICATION FORM #2
DISCREPANCY SHEET NUMBER 1

Area of Concern: ____ written correctness
(Check Applicable) X technical accuracy

EOP: FR-C.3 REV.: 11-30-84 STEP NUMBER: 3C, 21 (As applicable)

DISCREPANCY:

ERG step, Block Valves - Open, deleted from EOP without step justification.

EVALUATOR: C. R. Sterrett DATE: 1-8-85

RESOLUTION:

Revise step justification.

APPROVED: YES NO (circle one)

OPERATIONS STAFF MANAGER: _____ DATE: _____

RESOLUTION INCORPORATED BY: _____ DATE: _____

INDIAN POINT UNIT 2

EOP VERIFICATION FORM #1

EOP TITLE: Response to Loss of Secondary Heat Sink

EOP NUMBER: FR-H.1 REVISION: 11-30-84

SCOPE OF VERIFICATION: Assessment Phase

EVALUATOR(S): C. R. Sterrett

EOP SOURCE DOCUMENTS USED:

1. WOG Generic ERGs Revision 1 (LP) and Background Documents
2. FSAR
3. Indian Point 2 Plant Specific Technical Guidelines August, 1984
4. Operations Administrative Directive 7, Rev. 10
5. Indian Point 2 Writers Guide for EOPs
6. Indian Point 2 System Descriptions

PROCEDURE-GENERAL VERIFICATION

1. WRITTEN CORRECTNESS

AREA	ACCEPTABLE	DISCREPANCY SHEET #(s)
LEGIBILITY	X	
EOP FORMAT CONSISTENCY	X	
IDENTIFICATION INFORMATION	X	
2. TECHNICAL ACCURACY	X	

STEP, CAUTION, NOTE-SPECIFIC VERIFICATION

Are there any Step, CAUTION, or NOTE level discrepancies for this procedure?

____ YES, DISCREPANCY SHEET #(s) _____ X NO

INDIAN POINT UNIT 2

EOP VERIFICATION FORM #1

EOP TITLE: Response to Steam Generator Overpressure

EOP NUMBER: FR-H.2 REVISION: 11-30-84

SCOPE OF VERIFICATION: Assessment Phase

EVALUATOR(S): C. R. Sterrett

EOP SOURCE DOCUMENTS USED:

1. WOG Generic ERGs Revision 1 (LP) and Background Documents
2. FSAR
3. Indian Point 2 Plant Specific Technical Guidelines August, 1984
4. Operations Administrative Directive 7, Rev. 10
5. Indian Point 2 Writers Guide for EOPs
6. Indian Point 2 System Descriptions

PROCEDURE-GENERAL VERIFICATION

1. WRITTEN CORRECTNESS

AREA	ACCEPTABLE	DISCREPANCY SHEET #(s)
LEGIBILITY	X	
EOP FORMAT CONSISTENCY	X	
IDENTIFICATION INFORMATION	X	
2. TECHNICAL ACCURACY	X	

STEP, CAUTION, NOTE-SPECIFIC VERIFICATION

Are there any Step, CAUTION, or NOTE level discrepancies for this procedure?

____ YES, DISCREPANCY SHEET #(s) _____ X NO

INDIAN POINT UNIT 2

EOP VERIFICATION FORM #1

EOP TITLE: Response to Steam Generator High Level

EOP NUMBER: FR-H.3 REVISION: 11-30-84

SCOPE OF VERIFICATION: Assessment Phase

EVALUATOR(S): C. R. Sterrett

EOP SOURCE DOCUMENTS USED:

1. WOG Generic ERGs Revision 1 (LP) and Background Documents
2. FSAR
3. Indian Point 2 Plant Specific Technical Guidelines August, 1984
4. Operations Administrative Directive 7, Rev. 10
5. Indian Point 2 Writers Guide for EOPs
6. Indian Point 2 System Descriptions

PROCEDURE-GENERAL VERIFICATION

1. WRITTEN CORRECTNESS

AREA	ACCEPTABLE	DISCREPANCY SHEET #(s)
LEGIBILITY	X	
EOP FORMAT CONSISTENCY	X	
IDENTIFICATION INFORMATION	X	
2. TECHNICAL ACCURACY		1

STEP, CAUTION, NOTE-SPECIFIC VERIFICATION

Are there any Step, CAUTION, or NOTE level discrepancies for this procedure?

____ YES, DISCREPANCY SHEET #(s) _____ X NO

INDIAN POINT UNIT 2

EOP VERIFICATION FORM #2

DISCREPANCY SHEET NUMBER 1

Area of Concern: ____ written correctness

(Check Applicable) X technical accuracy

EOP: FR-H.3 REV.: 11-30-84 STEP NUMBER: 7 (As applicable)

DISCREPANCY:

Recorder radiation should be radiation recorder to properly describe the function.

EVALUATOR: C. R. Sterrett DATE: 1-9-85

RESOLUTION:

Revise EOP.

APPROVED: YES NO (circle one)

OPERATIONS STAFF MANAGER: _____ DATE: _____

RESOLUTION INCORPORATED BY: _____ DATE: _____

INDIAN POINT UNIT 2

EOP VERIFICATION FORM #1

EOP TITLE: Response to Loss of Normal Steam Release Capabilities

EOP NUMBER: FR-H.4 REVISION: 11-30-84

SCOPE OF VERIFICATION: Assessment Phase

EVALUATOR(S): C. R. Sterrett

EOP SOURCE DOCUMENTS USED:

1. WOG Generic ERGs Revision 1 (LP) and Background Documents
2. FSAR
3. Indian Point 2 Plant Specific Technical Guidelines August, 1984
4. Operations Administrative Directive 7, Rev. 10
5. Indian Point 2 Writers Guide for EOPs
6. Indian Point 2 System Descriptions

PROCEDURE-GENERAL VERIFICATION

1. WRITTEN CORRECTNESS

AREA	ACCEPTABLE	DISCREPANCY SHEET #(s)
LEGIBILITY	X	
EOP FORMAT CONSISTENCY	X	
IDENTIFICATION INFORMATION	X	
2. TECHNICAL ACCURACY	X	

STEP, CAUTION, NOTE-SPECIFIC VERIFICATION

Are there any Step, CAUTION, or NOTE level discrepancies for this procedure?

____ YES, DISCREPANCY SHEET #(s) _____ X NO

INDIAN POINT UNIT 2

EOP VERIFICATION FORM #1

EOP TITLE: Response to Steam Generator Low Level

EOP NUMBER: FR-H.5 REVISION: 11-30-84

SCOPE OF VERIFICATION: Assessment Phase

EVALUATOR(S): C. R. Sterrett

EOP SOURCE DOCUMENTS USED:

1. WOG Generic ERGs Revision 1 (LP) and Background Documents
2. FSAR
3. Indian Point 2 Plant Specific Technical Guidelines August, 1984
4. Operations Administrative Directive 7, Rev. 10
5. Indian Point 2 Writers Guide for EOPs
6. Indian Point 2 System Descriptions

PROCEDURE-GENERAL VERIFICATION

1. WRITTEN CORRECTNESS

AREA	ACCEPTABLE	DISCREPANCY SHEET #(s)
LEGIBILITY	X	
EOP FORMAT CONSISTENCY		1
IDENTIFICATION INFORMATION	X	
2. TECHNICAL ACCURACY	X	

STEP, CAUTION, NOTE-SPECIFIC VERIFICATION

Are there any Step, CAUTION, or NOTE level discrepancies for this procedure?

____ YES, DISCREPANCY SHEET #(s) _____ X NO

INDIAN POINT UNIT 2

EOP VERIFICATION FORM #2

DISCREPANCY SHEET NUMBER 1

Area of Concern: X written correctness
(Check Applicable) ____ technical accuracy

EOP: FR-H.5 REV.: 11-30-84 STEP NUMBER: 4 RNO (As applicable)

DISCREPANCY:

ERG skips a line between the two IF statements while EOP does not skip a line and runs the two statements together.

EVALUATOR: C. R. Sterrett DATE: 1-9-85

RESOLUTION:

Revise EOP.

APPROVED: YES NO (circle one)

OPERATIONS STAFF MANAGER: _____ DATE: _____

RESOLUTION INCORPORATED BY: _____ DATE: _____

INDIAN POINT UNIT 2

EOP VERIFICATION FORM #1

EOP TITLE: Response to Imminent Pressurized Thermal Shock Condition

EOP NUMBER: FR-P.1 REVISION: 11-30-84

SCOPE OF VERIFICATION: Assessment Phase

EVALUATOR(S): C. R. Sterrett

EOP SOURCE DOCUMENTS USED:

1. WOG Generic ERGs Revision 1 (LP) and Background Documents
2. FSAR
3. Indian Point 2 Plant Specific Technical Guidelines August, 1984
4. Operations Administrative Directive 7, Rev. 10
5. Indian Point 2 Writers Guide for EOPs
6. Indian Point 2 System Descriptions

PROCEDURE-GENERAL VERIFICATION

1. WRITTEN CORRECTNESS

AREA	ACCEPTABLE	DISCREPANCY SHEET #(s)
LEGIBILITY	X	
EOP FORMAT CONSISTENCY		2
IDENTIFICATION INFORMATION		1
2. TECHNICAL ACCURACY	X	

STEP, CAUTION, NOTE-SPECIFIC VERIFICATION

Are there any Step, CAUTION, or NOTE level discrepancies for this procedure?

____ YES, DISCREPANCY SHEET #(s) _____ X NO

INDIAN POINT UNIT 2

EOP VERIFICATION FORM #2

DISCREPANCY SHEET NUMBER 1

Area of Concern: ____ written correctness

(Check Applicable) X technical accuracy

EOP: FR-P.1 REV.: 11-30-84 STEP NUMBER: Figure FRP1.1 (As applicable)

DISCREPANCY:

Draw arrows to identify which curves apply.

EVALUATOR: C. R. Sterrett DATE: 1-9-85

RESOLUTION:

Revise EOP.

APPROVED: YES NO (circle one)

OPERATIONS STAFF MANAGER: _____ DATE: _____

RESOLUTION INCORPORATED BY: _____ DATE: _____

INDIAN POINT UNIT 2

EOP VERIFICATION FORM #2

DISCREPANCY SHEET NUMBER 2

Area of Concern: ____ written correctness

(Check Applicable) X technical accuracy

EOP: FR-P.1 REV.: 11-30-84 STEP NUMBER: 5, 11, 14, 15b, 21 (As applicable)

DISCREPANCY:

EOP refers to RCS pressure while ERG refers to RCS subcooling temperature. Step justification should address.

EVALUATOR: C. R. Sterrett DATE: 1-9-85

RESOLUTION:

Revise step justification.

APPROVED: YES NO (circle one)

OPERATIONS STAFF MANAGER: _____ DATE: _____

RESOLUTION INCORPORATED BY: _____ DATE: _____

INDIAN POINT UNIT 2

EOP VERIFICATION FORM #1

EOP TITLE: Response to Anticipated Pressurized Thermal Shock Condition

EOP NUMBER: FR-P.2 REVISION: 11-30-84

SCOPE OF VERIFICATION: Assessment Phase

EVALUATOR(S): C. R. Sterrett

EOP SOURCE DOCUMENTS USED:

1. WOG Generic ERGs Revision 1 (LP) and Background Documents
2. FSAR
3. Indian Point 2 Plant Specific Technical Guidelines August, 1984
4. Operations Administrative Directive 7, Rev. 10
5. Indian Point 2 Writers Guide for EOPs
6. Indian Point 2 System Descriptions

PROCEDURE-GENERAL VERIFICATION

1. WRITTEN CORRECTNESS

AREA	ACCEPTABLE	DISCREPANCY SHEET #(s)
LEGIBILITY	X	
EOP FORMAT CONSISTENCY	X	
IDENTIFICATION INFORMATION	X	
2. TECHNICAL ACCURACY		1

STEP, CAUTION, NOTE-SPECIFIC VERIFICATION

Are there any Step, CAUTION, or NOTE level discrepancies for this procedure?

____ YES, DISCREPANCY SHEET #(s) ____ X NO

INDIAN POINT UNIT 2
EOP VERIFICATION FORM #2
DISCREPANCY SHEET NUMBER 1

Area of Concern: ____ written correctness
(Check Applicable) X technical accuracy

EOP: FR-P.2 REV.: 11-30-84 STEP NUMBER: 1e RNO (As applicable)

DISCREPANCY:

To reflect ERG wording, add word 'temperature' to EOP statement. EOP should say '... for RCS temperature control,'.

EVALUATOR: C. R. Sterrett DATE: 1-9-85

RESOLUTION:

Revise EOP.

APPROVED: YES NO (circle one)

OPERATIONS STAFF MANAGER: _____ DATE: _____

RESOLUTION INCORPORATED BY: _____ DATE: _____

INDIAN POINT UNIT 2

EOP VERIFICATION FORM #1

EOP TITLE: Response to High Containment Pressure

EOP NUMBER: FR-Z.1 REVISION: 11-30-84

SCOPE OF VERIFICATION: Assessment Phase

EVALUATOR(S): C. R. Sterrett

EOP SOURCE DOCUMENTS USED:

1. WOG Generic ERGs Revision 1 (LP) and Background Documents
2. FSAR
3. Indian Point 2 Plant Specific Technical Guidelines August, 1984
4. Operations Administrative Directive 7, Rev. 10
5. Indian Point 2 Writers Guide for EOPs
6. Indian Point 2 System Descriptions

PROCEDURE-GENERAL VERIFICATION

1. WRITTEN CORRECTNESS

AREA	ACCEPTABLE	DISCREPANCY SHEET #(s)
LEGIBILITY	X	
EOP FORMAT CONSISTENCY	X	
IDENTIFICATION INFORMATION	X	
2. TECHNICAL ACCURACY	X	

STEP, CAUTION, NOTE-SPECIFIC VERIFICATION

Are there any Step, CAUTION, or NOTE level discrepancies for this procedure?

____ YES, DISCREPANCY SHEET #(s) _____ X NO

INDIAN POINT UNIT 2

EOP VERIFICATION FORM #1

EOP TITLE: Response to Containment Flooding

EOP NUMBER: FR-Z.2 REVISION: 11-30-84

SCOPE OF VERIFICATION: Assessment Phase

EVALUATOR(S): C. R. Sterrett

EOP SOURCE DOCUMENTS USED:

1. WOG Generic ERGs Revision 1 (LP) and Background Documents
2. FSAR
3. Indian Point 2 Plant Specific Technical Guidelines August, 1984
4. Operations Administrative Directive 7, Rev. 10
5. Indian Point 2 Writers Guide for EOPs
6. Indian Point 2 System Descriptions

PROCEDURE-GENERAL VERIFICATION

1. WRITTEN CORRECTNESS

AREA	ACCEPTABLE	DISCREPANCY SHEET #(s)
LEGIBILITY	X	
EOP FORMAT CONSISTENCY	X	
IDENTIFICATION INFORMATION	X	
2. TECHNICAL ACCURACY	X	

STEP, CAUTION, NOTE-SPECIFIC VERIFICATION

Are there any Step, CAUTION, or NOTE level discrepancies for this procedure?

____ YES, DISCREPANCY SHEET #(s) _____ X NO

INDIAN POINT UNIT 2

EOP VERIFICATION FORM #1

EOP TITLE: Response to High Containment Radiation Level

EOP NUMBER: FR-Z.3 REVISION: _____

SCOPE OF VERIFICATION: Assessment Phase

EVALUATOR(S): C. R. Sterrett

EOP SOURCE DOCUMENTS USED:

1. WOG Generic ERGs Revision 1 (LP) and Background Documents
2. FSAR
3. Indian Point 2 Plant Specific Technical Guidelines August, 1984
4. Operations Administrative Directive 7, Rev. 10
5. Indian Point 2 Writers Guide for EOPs
6. Indian Point 2 System Descriptions

PROCEDURE-GENERAL VERIFICATION

1. WRITTEN CORRECTNESS

AREA	ACCEPTABLE	DISCREPANCY SHEET #(s)
LEGIBILITY	X	
EOP FORMAT CONSISTENCY	X	
IDENTIFICATION INFORMATION	X	
2. TECHNICAL ACCURACY	X	

STEP, CAUTION, NOTE-SPECIFIC VERIFICATION

Are there any Step, CAUTION, or NOTE level discrepancies for this procedure?

____ YES, DISCREPANCY SHEET #(s) _____ X NO

INDIAN POINT UNIT 2

EOP VERIFICATION FORM #1

EOP TITLE: Response to High Pressurizer Level

EOP NUMBER: FR-I.1 REVISION: 11-30-84

SCOPE OF VERIFICATION: Assessment Phase

EVALUATOR(S): C. R. Sterrett

EOP SOURCE DOCUMENTS USED:

1. WOG Generic ERGs Revision 1 (LP) and Background Documents
2. FSAR
3. Indian Point 2 Plant Specific Technical Guidelines August, 1984
4. Operations Administrative Directive 7, Rev. 10
5. Indian Point 2 Writers Guide for EOPs
6. Indian Point 2 System Descriptions

PROCEDURE-GENERAL VERIFICATION

1. WRITTEN CORRECTNESS

AREA	ACCEPTABLE	DISCREPANCY SHEET #(s)
LEGIBILITY	X	
EOP FORMAT CONSISTENCY	X	
IDENTIFICATION INFORMATION	X	
2. TECHNICAL ACCURACY	X	

STEP, CAUTION, NOTE-SPECIFIC VERIFICATION

Are there any Step, CAUTION, or NOTE level discrepancies for this procedure?

____ YES, DISCREPANCY SHEET #(s) _____ X NO

INDIAN POINT UNIT 2

EOP VERIFICATION FORM #1

EOP TITLE: Response to Low Pressurizer Level

EOP NUMBER: FR-I.2 REVISION: 11-30-84

SCOPE OF VERIFICATION: Assessment Phase

EVALUATOR(S): C. R. Sterrett

EOP SOURCE DOCUMENTS USED:

1. WOG Generic ERGs Revision 1 (LP) and Background Documents
2. FSAR
3. Indian Point 2 Plant Specific Technical Guidelines August, 1984
4. Operations Administrative Directive 7, Rev. 10
5. Indian Point 2 Writers Guide for EOPs
6. Indian Point 2 System Descriptions

PROCEDURE-GENERAL VERIFICATION

1. WRITTEN CORRECTNESS

AREA	ACCEPTABLE	DISCREPANCY SHEET #(s)
LEGIBILITY	X	
EOP FORMAT CONSISTENCY	X	
IDENTIFICATION INFORMATION	X	
2. TECHNICAL ACCURACY	X	

STEP, CAUTION, NOTE-SPECIFIC VERIFICATION

Are there any Step, CAUTION, or NOTE level discrepancies for this procedure?

____ YES, DISCREPANCY SHEET #(s) _____ X NO

INDIAN POINT UNIT 2

EOP VERIFICATION FORM #1

EOP TITLE: Response to Voids in Reactor Vessel

EOP NUMBER: FR-I.3 REVISION: 11-30-84

SCOPE OF VERIFICATION: Assessment Phase

EVALUATOR(S): C. R. Sterrett

EOP SOURCE DOCUMENTS USED:

1. WOG Generic ERGs Revision 1 (LP) and Background Documents
2. FSAR
3. Indian Point 2 Plant Specific Technical Guidelines August, 1984
4. Operations Administrative Directive 7, Rev. 10
5. Indian Point 2 Writers Guide for EOPs
6. Indian Point 2 System Descriptions

PROCEDURE-GENERAL VERIFICATION

1. WRITTEN CORRECTNESS

AREA	ACCEPTABLE	DISCREPANCY SHEET #(s)
LEGIBILITY	X	
EOP FORMAT CONSISTENCY	X	
IDENTIFICATION INFORMATION	X	
2. TECHNICAL ACCURACY		1

STEP, CAUTION, NOTE-SPECIFIC VERIFICATION

Are there any Step, CAUTION, or NOTE level discrepancies for this procedure?

____ YES, DISCREPANCY SHEET #(s) _____ X NO

INDIAN POINT UNIT 2
EOP VERIFICATION FORM #2
DISCREPANCY SHEET NUMBER 1

Area of Concern: ____ written correctness
(Check Applicable) X technical accuracy

EOP: FR-I.3 REV.: 11-30-84 STEP NUMBER: Attachment B (As applicable)

DISCREPANCY:

EOP equation for A lists 492°R while ERG equation for A lists 492°F.

EVALUATOR: C. R. Sterrett DATE: 1-9-85

RESOLUTION:

°R is correct as stated in EOP. ERG revised via ERG maintenance program.

APPROVED: YES NO (circle one)

OPERATIONS STAFF MANAGER: _____ DATE: _____

RESOLUTION INCORPORATED BY: _____ DATE: _____

INDIAN POINT UNIT 2

EOP VERIFICATION FORM #1

EOP TITLE: All

EOP NUMBER: All REVISION: 11-30-84

SCOPE OF VERIFICATION: Assessment Phase

EVALUATOR(S): C. R. Sterrett

EOP SOURCE DOCUMENTS USED:

1. WOG Generic ERGs Revision 1 (LP) and Background Documents
2. FSAR
3. Indian Point 2 Plant Specific Technical Guidelines August, 1984
4. Operations Administrative Directive 7, Rev. 10
5. Indian Point 2 Writers Guide for EOPs
6. Indian Point 2 System Descriptions

PROCEDURE-GENERAL VERIFICATION

1. WRITTEN CORRECTNESS

AREA	ACCEPTABLE	DISCREPANCY SHEET #(s)
LEGIBILITY	X	
EOP FORMAT CONSISTENCY		1
IDENTIFICATION INFORMATION	X	
2. TECHNICAL ACCURACY	X	

STEP, CAUTION, NOTE-SPECIFIC VERIFICATION

Are there any Step, CAUTION, or NOTE level discrepancies for this procedure?

____ YES, DISCREPANCY SHEET #(s) _____ X NO

INDIAN POINT UNIT 2
EOP VERIFICATION FORM #2
DISCREPANCY SHEET NUMBER 1

Area of Concern: X written correctness
(Check Applicable) ____ technical accuracy

EOP: All REV.: 11-30-84 STEP NUMBER: - (As applicable)

DISCREPANCY:

EOPs do not have a table of contents while the ERGs do. A table of contents would be useful.

EVALUATOR: C. R. Sterrett DATE: 1-10-85

RESOLUTION:

Due to the flow of the EOPs and being symptom driven, there is no need for a table of contents. However, for record keeping purposes, a page revision index is provided.

APPROVED: YES NO (circle one)

OPERATIONS STAFF MANAGER: _____ DATE: _____

RESOLUTION INCORPORATED BY: _____ DATE: _____

ATTACHMENT 3

INDIAN POINT UNIT 2 FORM #3

EOP VERIFICATION

11-30-84 Revision

Verification Completion Date: 1-14-85

Performed by: 1. C. R. Sterrett

2. _____

3. _____

4. _____

5. _____

All actions required by the verification have been completed and approved.

_____ Date: _____

Operations Staff Manager

ATTACHMENT 8

EOP Process Parameter Values

Consolidated Edison Company of New York, Inc.
Indian Point Unit No. 2

February, 1987

This attachment describes the methodology used to determine the plant specific fill-in process parameter values defined in the ERGs, Rev. 1 as denoted therein by footnotes. These footnotes explain what process parameter fill-in value is required to trigger an action or determine a stable plant condition. The methodology is contained in the EXECUTIVE VOLUME of the ERGs, Rev. 1 which was followed in developing the IP-2 EOPs. The actual plant specific values determined by this process which are part of the IP-2 EOPs are also included in this attachment.

In implementing the EOPs plant specific instrumentation that is necessary for the operator to effectively detect, diagnose and mitigate postulated accidents is identified and the various contributors to instrument channel accuracy are defined. These instrument and control characteristics are accounted for in the EOPs in establishing the operators information needs. Normal and adverse containment conditions are defined and by using the plant-specific equipment qualification data, error contributors are combined for inclusion into the EOP process parameter values. Instrument channel accuracy is determined from the various entities that contribute to the total channel accuracy which are defined as follows: process measurement accuracy, primary element accuracy, sensor allowable deviation, rack allowable deviation, environmental allowance and indicator allowable deviation. The IP-2 EOP values use the statistical error combination method where the error entities that are statistically independent (not interactive) can be statistically combined in a group utilizing square root sum of squares formulation. Those error entities that are not independent are arithmetically combined into a group (i.e., merely added up). If the two groups are independent effects, they can then be statistically combined otherwise, they are arithmetically combined.

The EOPs are written such that, in many steps, the operator determines an appropriate action to be taken based upon these process parameter values. An example of such a step given below:

- Check PRZR level - GREATER THAN 4% [36% FOR ADVERSE CONTAINMENT]

The first process parameter value, 4%, is the normal containment value and includes allowances for the normal indicated channel accuracy wich comprises all the error contributors defined above except environmental allowance. The second process parameter value (value in brackets) is the adverse containment value which includes all error contributors defined above and environmental allowance due to adverse containment conditions. The environmental allowance is computed by adding the errors associated with each of the effects of the high energy line break environment. This sum results in a conservative bounding adverse containment deviation characteristic of the plant instrumentation. In those instances in the EOPs where both the normal and adverse containment process parameter values are given (as illustrated in the example), the operator decides which of the two values to use by determining the containment pressure and radiation conditions. If either containment

pressure exceeds 4 psig or the containment radiation exceeds 10^5R/hr, the operator would implement the procedures using the adverse containment (post-accident) process parameter values. Alternately, if containment pressure is less than 4 psig and containment radiation is less than 10^5 R/hr, the operator would use the normal containment value. With saturated conditions in containment, a containment pressure value of 4 psig corresponds to approximately 228°F. Using a linear relationship between sensor post-accident deviation and contaiment temperature, the sensor post-accident deviation errors are insignificant below 228°F. If containment pressure decreases below the pressure setpoint after it had been exceeded, the operator may again use the normal containment value. However, once the radiation setpoint has been exceeded, the operator must continue to use the adverse containment value unless the integrated radiation dose is verified to be less than 10^6 Rads. Radiation exposure tests have demonstrated that sensor post-accident deviation errors are generally insignificant for an integrated radiation dose of approximately 10^6 Rads.

The error analysis for the post-accident monitoring instrumentation channels are calculated using this methodology in a straight forward manner, except for RCS subcooling. RCS subcooling can be obtained manually by using a steam table/graph or the digital display which computes it using a computer based algorithm. The subcooling error for obtaining zero degrees subcooling information is calculated for a full range of reactor coolant system pressures using a statistical combination for both the manual and computer based methods. Errors are calculated for input, output, and computational errors associated with a subcooling monitor. An error allowance is also included for extrapolation when the subcooling error is computed manually. These instrumentation characteristics are included in the EOPs in a manner that facilitates getting the information to the operators. The calculated subcooling values are conservatively broken down into four pressure groupings so that either the subcooling monitor or steam table/graph can be used and are put into tabular form as shown in the example below:

RCS PRESSURE PSIG	RCS SUBCOOLING F (ADVERSE CONTAINMENT F)
0-200	120 (180)
201-500	50 (250)
501-1000	33 (136)
1001-2500	30 (62)

INDIAN POINT UNIT 2

PLANT SPECIFIC SETPOINTS

FOR

EMERGENCY OPERATING PROCEDURES

BASED ON

REVISION 1 OF THE WESTINGHOUSE

OWNER'S GROUP LOW PRESSURE

EMERGENCY RESPONSE GUIDELINES

January 1, 1985

8142Q:1D/022285

TABLE OF CONTENTS

		Page
A.	PRZR Pressure	1
B.	RCS Pressure	9
C.	RCS Pressure - Temperature Limits	18
D.	PRZR Level	28
E.	RCS Temperature	44
F.	RCS Hot Leg Temperature	49
G.	Core Exit Temperature	51
H.	Cooldown Rate	54
I.	RCS Cold Leg Temperature	55
J.	RVLIS Upper Range	58
K.	RVLIS Full Range	59
L.	RVLIS Dynamic Range	62
M.	SG NR Level	67
N.	SG WR Level	75
O.	SG Pressure	77
P.	Nuclear Instrumentation	87
Q.	Boration	88
R.	RCS Subcooling	89
S.	Flow	113
T.	Containment Values	120
U.	Tank Values	135
V.	Elapsed Time Values	146
W.	RCP Values	150
X.	Other Parameters	160

EMERGENCY RESPONSE GUIDELINES, REV. 1 LP

FOOTNOTE CROSS REFERENCE TABLE

E-0

1	T.2
2	B.5
3	B.6
4	B.7
5	B.8
6	S.2
7	E.5
8	M.2
9	M.3
10	A.2
11	A.3
12	W.4
13	W.5
14	R.1
15	D.4
16	U.1

ES-0.1

1	E.5
2	S.2
3	M.2
4	E.4
5	Q.1
6	D.2
7	D.1
8	A.4
9	A.1
10	P.1
11	R.1

ES-0.2

1	U.1
2	H.1
3	M.1
4	C.1
5	A.6
6	A.7
7	D.1
8	ES-0.3
9	R.3
10	R.4
11	E.2
12	B.1

ES-0.3

1	D.10
2	R.5
3	R.1
4	C.1
5	K.3
6	E.2
7	B.1

ES-0.4

1	D.10
2	R.5
3	A.6
4	C.1
5	E.2
6	B.1
7	W.4
8	W.5
9	R.1
10	R.2
11	D.4
12	D.5
13	K.1
14	M.3
15	S.2
16	I.1
17	T.3
18	U.1

E-1

1	W.4
2	W.5
3	U.1
4	M.2
5	M.3
6	S.2
7	A.2
8	R.1
9	R.2
10	B.5
11	B.6
12	D.4
13	D.5
14	T.4
15	B.7
16	B.8
17	S.3
18	U.2
19	V.2
20	V.1

ES-1.1

1	R.1
2	R.2
3	D.4
4	D.5
5	D.6
6	D.7
7	U.1
8	M.2
9	M.3
10	S.2
11	P.1

ES-1.2

1	U.2
2	B.7
3	B.8
4	U.1
5	M.2
6	M.3
7	S.2
8	N/A
9	R.1
10	R.2
11	D.6
12	D.7
13	R.7
14	D.8
15	D.9
16	D.4
17	D.5
18	R.1
19	R.2
20	P.1
21	W.1
22	W.2
23	E.2
24	E.3
25	B.1
26	B.2

ES-1.4

1	R.1
2	R.2
3	S.2
4	M.2
5	M.3
6	B.5
7	B.6
8	D.4
9	D.5
10	K.1
11	I.1
12	T.3
13	U.2
14	U.1

E-2

1	U.1

E-3

1	W.4
2	W.5
3	O.3
4	M.2
5	M.3
6	A.2
7	U.1
8	S.2
9	B.7
10	B.8
11	O.5
12	N/A
13	G.1
14	G.2
15	R.1
16	R.2
17	D.4
18	D.5
19	D.8
20	D.9
21	R.1
22	R.2
23	D.6
24	D.7
25	J.1
26	D.10
27	D.11
28	R.5
29	R.6
30	P.1

ES-3.1

1	R.1
2	R.2
3	D.4
4	D.5
5	U.1
6	M.2
7	M.3
8	S.2
9	M.4
10	M.5
11	O.4
12	D.6
13	D.7
14	D.8
15	D.9
16	E.2
17	E.3
18	B.1
19	B.2
20	W.1
21	W.2

ES-3.2

1	R.1
2	R.2
3	D.4
4	D.5
5	U.1
6	M.2
7	M.3
8	S.2
9	E.2
10	E.3
11	D.6
12	D.7
13	D.8
14	D.9
15	M.4
16	M.5
17	O.4
18	W.1
19	W.2
20	B.1
21	B.2

ES-3.3

1	R.1
2	R.2
3	D.4
4	D.5
5	U.1
6	M.2
7	M.3
8	S.2
9	E.2
10	E.3
11	D.6
12	D.7

ES-3.3

13	D.8
14	D.9
15	M.4
16	M.5
17	O.4
18	W.1
19	W.2
20	B.1
21	B.2
22	K.1
23	I.1
24	T.3
25	U.2

ECA-0

1	A.2
2	S.2
3	O.3
4	M.2
5	M.3
6	U.1
7	O.7
8	O.8
9	I.3
10	I.4
11	T.2
12	T.6
13	U.6
14	N/A
15	R.1
16	R.2
17	D.4
18	D.5

ECA-0.1

1	S.1
2	R.1
3	R.2
4	D.4
5	D.5
6	D.6
7	D.7
8	U.1
9	M.2
10	M.3
11	S.2
12	P.1

ECA-0.2

1	U.2
2	U.7
3	U.6
4	U.1
5	M.2
6	N/A
7	N/A

ECA-1.1

1	U.3
2	U.2
3	T.4
4	T.3
5	T.13
6	N/A
7	N/A
8	B.7
9	B.8
10	K.2
11	O.6
12	O.7
13	W.1
14	W.2
15	E.2
16	E.3
17	B.1
18	B.2
	S.4

ECA-2.1

1	S.2
2	S.5
3	M.2
4	M.3
5	W.4
6	W.5
7	U.1
8	A.2
9	B.7
10	B.8
11	T.4
12	U.2
13	R.1
14	R.2
15	B.5
16	B.6
17	D.4
18	D.5
19	D.6
20	D.7
21	P.1
22	E.2
23	E.3
24	B.1
25	B.2
26	K.1
27	I.1
28	T.3

ECA-3.1

1	U.2
2	T.4
3	B.7
4	B.8
5	U.1
6	M.2
7	M.3
8	S.2
9	N/A
10	R.1
11	R.2
12	U.4
13	M.7
14	M.8
15	D.6
16	D.7
17	R.7
18	D.8
19	D.9
20	D.4
21	D.5
22	R.1
23	R.2
24	P.1
25	M.4
26	M.5
27	O.4
28	W.1
29	W.2
30	E.2
31	E.3
32	B.1
33	B.2
34	K.1
35	I.1
36	T.3

ECA-3.2

1	U.2
2	B.7
3	B.8
4	U.1
5	M.2
6	M.3
7	S.2
8	N/A
9	R.1
10	R.2
11	D.4
12	D.5
13	R.7
14	K.3
15	L.5
16	D.8
17	D.9
18	P.1
19	M.4
20	M.5
21	O.4
22	W.1
23	W.2
24	E.2
25	E.3
26	B.1
27	B.2
28	K.1
29	I.1
30	T.3

ECA-3.3

1	M.4
2	M.5
3	U.1
4	M.2
5	M.3
6	S.2
7	D.4
8	D.5
9	R.1
10	R.2
11	K.2
12	P.1
13	E.2
14	E.3
15	R.1
16	R.2
17	M.7
18	M.8
19	B.1
20	B.2
21	O.4
22	W.1
23	W.2
24	K.1
25	I.1
26	T.3

FR-S.1

1	A.2
2	A.8
3	S.6

FR-S.2

1	P.1

FR-C.1

1	U.2
2	V.3
3	K.1
4	U.1
5	M.2
6	M.3
7	S.2
8	O.7
9	K.2

FR-C.2

1	U.2
2	B.7
3	B.8
4	L.1
5	L.2
6	L.3
7	L.4
8	W.3
9	K.1
10	U.1
11	M.2
12	M.3
13	O.7
14	V.3
15	K.2

FR-C.3

1	U.2
2	B.7
3	B.8

FR-H.1

1	S.2
2	X.1
3	X.2
4	E.2
5	E.3
6	M.2
7	M.3
8	A.6
9	O.9
10	U.2
11	R.7
12	D.4
13	D.5
14	A.7

FR-H.2

1	O.1
2	M.7
3	M.8
4	F.1
5	F.2

FR-H.3

1	M.7
2	M.8
3	M.6
4	M.2
5	M.3

FR-H.4

1	O.2
2	M.7
3	M.8

FR-H.5

1	M.2
2	M.3
3	S.5
4	N.1
5	N.2

FR-P.1

1	S.2
2	M.2
3	M.3
4	S.5
5	A.2
6	R.1
7	R.2
8	K.2
9	S.1
10	R.1
11	R.2
12	R.1
13	R.2
14	D.3
15	D.12
16	D.6
17	D.7
18	V.4
--	C.2

FR-P.2

1	S.2
2	M.2
3	M.3
4	S.5
--	C.3

FR-Z.1

1	T.2
2	T.12

FR-I.1

1	S.1
2	A.2
3	A.3
4	D.3

FR-I.2

1	S.1
2	D.2

FR-I.3

1	S.1
2	B.3
3	B.4
4	D.6
5	D.7
6	J.1
7	D.10
8	D.11
9	R.5
10	R.6
11	A.6
12	R.1
13	R.2
14	R.1
15	R.2
16	T.10
--	T.11

F-0.2

1	R.1+R.2
2	K.1
3	L.1
4	L.2
5	L.3
6	L.4

F-0.3

1	M.2+M.3
2	S.2
3	O.1
4	M.6
5	O.2

F-0.4

1	I.1
2	I.2
3	E.1
--	C.4

F-0.5

1	T.3
2	T.1
3	T.7
4	T.5

F-0.6

1	D.3
2	D.2
3	J.1

SETPOINT DOCUMENTATION SHEET

A. PRESSURIZER PRESSURE VALUES

1. Setpoint/Value Description: Normal operating pressure.

Determined Setpoint/Value: 2235 psig

Specific Instrument Usage: Pressurizer Pressure

Guidelines: ES-0.1(9)

References/Sources:
1. IPP System Description No. 1 "Reactor Coolant System", pg. 82.
2. PLS Document, P-1-13.

Assumption(s):

Calculation(s): Pressure is 2235 psig per Ref. 1 and 2.

SETPOINT DOCUMENTATION SHEET

A. PRESSURIZER PRESSURE VALUES

2. Setpoint/Value Description: PRZR PORV pressure setpoint.

Determined Setpoint/Value: 2335 psig

Specific Instrument Usage: Pressurizer Pressure

Guidelines: E-0(10), E-1(7), E-3(6), ECA-0(1), ECA-2.1(8), FR-S.1(1), FR-P.1(5), FR-I.1(2)

References/Sources:
1. PLS Document P-1-14.
2. Meeting at IPP, 11/09/84

Assumption(s):

Calculation(s): The pressurizer PORV opening setpoint is 2335 psig per Ref. 1. Both PORVs verified to open at 2335 psig with no derivative circuit per Ref. 2.

SETPOINT DOCUMENTATION SHEET

A. PRESSURIZER PRESSURE VALUES

3. Setpoint/Value Description: PRZR spray pressure setpoint.

Determined Setpoint/Value: 2260 psig

Specific Instrument Usage: Pressurizer Pressure

Guidelines: E-0(11), FR-I.1(3)

References/Sources:
1. PLS Document, P-1-14.
2. IPP System Description No. 1, "Reactor Coolant System", pg 82.

Assumption(s): Use the spray setpoint pressure to start opening spray valve, since setpoint is used to determine manual closing of spray valve.

Calculation(s): Spray valve initial opening pressure is 2260 psig per Ref. 1 and 2.

SETPOINT DOCUMENTATION SHEET

A. PRESSURIZER PRESSURE VALUES

4. Setpoint/Value Description: Low PRZR pressure SI setpoint.

Determined Setpoint/Value: 1837 psig

Specific Instrument Usage: Pressurizer Pressure

Guidelines: ES-0.1(8)

References/Sources:
1. PLS Document, P-1-7.
2. Technical Specifications, Table 3-1.
3. IPP Emergency Procedure E-1, "Loss of Reactor Coolant", pg. 2.

Assumption(s): 1. Use setpoint from current Emergency Procedure.

Calculation(s): Low PRZR pressure SI setpoint = 1700 psig per Ref. 1 and 2.
Low PRZR pressure SI setpoint = 1837 psig per Ref. 3
Use 1837 psig (Ass. 1)

SETPOINT DOCUMENTATION SHEET

A. PRESSURIZER PRESSURE VALUES

5. Setpoint/Value Description: Value to block low pressurizer pressure SI.

Determined Setpoint/Value: 1940 psig

Specific Instrument Usage: Pressurizer Pressure

Guidelines: N/A

References/Sources:
1. PLS Document, P-1-7
2. IPP System Description No. 10.0 "Engineered Safeguards System", pg. 37.
3. IPP Abnormal Operating Instruction A-4-A, pg. 7.
4. IPP System Description No. 28, "Overall Unit Protection System", pg. 39.

Assumption(s):

Calculation(s): SI block for low pressurizer pressure = 1900 psig (Ref. 1, 2, 4)
Block for low pressure SI = 1940 psig (Ref. 3)
Use 1940 psig

SETPOINT DOCUMENTATION SHEET

A. PRESSURIZER PRESSURE VALUES

6. Setpoint/Value Description: Pressure 50 psi below permissive to block SI.

Determined Setpoint/Value: 1890 psig

Specific Instrument Usage: Pressurizer Pressure

Guidelines: ES-0.2(5), ES-0.4(3), FR-H.1(8), FR-I.3(11)

References/Sources: 1. Calculation for "Value to block low pressurizer pressure SI", A5.

Assumption(s):

Calculation(s): Value to block low pressurizer pressure SI = 1940 psig (Ref. 1)
Pressure 50 psi below permissive to block SI = 1940 - 50 = 1890 psig.

SETPOINT DOCUMENTATION SHEET

A. PRESSURIZER PRESSURE VALUES

7. Setpoint/Value Description: Pressure at which SI unblocks.

Determined Setpoint/Value: 1940 psig

Specific Instrument Usage: Pressurizer Pressure

Guidelines: ES-0.2(6), FR-H1 (14)

References/Sources:

1. PLS Document, P-1-7.
2. IPP System Description No. 10.0 "Engineered Safeguards System", pg. 37.
3. IPP Abnormal Operating Instruction A-4-A, pg. 7.
4. IPP System Description No. 28 "Overall Unit Protection System", pg. 39.

Assumption(s):

Calculation(s): Automatic reset of manual block of SI at pressurizer pressure = 1900 psig (Ref. 1, 2, and 4) Block for low pressur SI = 1940 psig (Ref. 3)
Use 1940 psig.

SETPOINT DOCUMENTATION SHEET

A. PRESSURIZER PRESSURE VALUES

8. Setpoint/Value Description: 200 psi less than PRZR PORV pressure setpoint.

Determined Setpoint/Value: 2135 psig

Specific Instrument Usage: Pressurizer Pressure

Guidelines: FR-S.1(2)

References/Sources: 1. Calculation of "PRZR PORV Setpoint", A2.

Assumption(s):

Calculation(s): From Ref. 1 PORV setpoint = 2335 psig
2335 - 200 = 2135 psig

SETPOINT DOCUMENTATION SHEET

B. RCS PRESSURE VALUES

1. Setpoint/Value Description: Pressure requirement, including allowances for normal channel accuracy, for placing RHR System in service.

Determined Setpoint/Value: Pressure = 450 psig

Specific Instrument Usage: Wide Range RCS Pressure

Guidelines: ES-0.2(12), ES-0.3(7), ES-0.4(6), ES-1.2(25), ES-3.1(18), ES-3.2(20), ES-3.3(20), ECA-1.1(17), ECA-2.1(24), ECA-3.1(32), ECA-3.2(26), ECA-3.3(19)

References/Sources:
1. Technical Specifications, pg. 3.1-2a
2. Instrument uncertainty, W provided
3. IPP FSAR Table 6.2-5
4. PLS Document, P-4-4
5. IPP Plant Operating Procedure POP-3.3

Assumption(s):
1. Setpoints includes large margin below RHR design pressure, so use nominal value.

Calculation(s): RHR system service pressure = 450 psig (Ref. 1 and 5)

RHR loop isolation valves setpoint = 450 psig (Ref. 4)

Recommended RCS pressure range = 400 - 450 psig

Normal channel accuracy of wide range pressure
= 3.0% of span (Ref. 2)

Wide range RCS pressure span = 0 - 3000 psig

accuracy = (0.03) (3000) = 90 psig

RHR system design conditions at 600 psig (Ref. 3)

RHR pump discharge pressure HI alarm setpoint = 590 psig

Use Loop isolation valves setpoint 450 psig

Margin to design pressure = 600 - 450 = 150 psig

> 90 psig

B. RCS PRESSURE VALUES

2. Setpoint/Value Description: Pressure requirement, including allowances for normal channel accuracy and post accident transmitter errors, for placing RHR System in service.

Determined Setpoint/Value: 210 psig

Specific Instrument Usage: RCS Wide Range Pressure

Guidelines: ES-1.2(26), ES-3.1(19), ES-3.2(21), ES-3.3(21), ECA-1.1(18), ECA-2.1(25), ECA-3.1(33), ECA-3.2(27), ECA-3.3(20)

References/Sources:
1. Instrument uncertainty, W provided.
2. Calculation for "Pressure for placing RHR System in service with normal accuracy", B1
3. IPP System Descripton No. 4.2. "Residual Heat Removal Loop", pg. 9

Assumption(s): 1. Substract Uncertainty fom Design Pressure

Calculation(s): From Ref. 2

Design RHR pressure = 600 psig (Ref. 3)

Adverse uncertainty = 13% of span (Ref. 1)

Accuracy = (0.13) (3000) = 390 psig

Adverse RCS pressure = 600-390 = 210 psig

B. RCS PRESSURE VALUES

3. Setpoint/Value Description: Saturation pressure corresponding to full power RCS hot leg temperature, including allowances for normal channel accuracy.

Determined Setpoint/Value: 1588 psig

Specific Instrument Usage: Wide Range RCS Pressure

Guidelines: FR-I.3(2)

References/Sources:
1. Instrument Uncertainty, W provided
2. ASME Steam Tables
3. W Provided

Assumption(s):
1. Adding pressure accuracy gives conservatively high setpoint for saturation pressure.

Calculation(s): Vessel outlet temperature = T_{HL} = 596.0°F (Ref. 3)

P_{SAT} (T_{HL}) = P_{SAT} (596°F) = 1498 psig (Ref. 2)

Normal channel accuracy of wide range pressure = 3% of span with span of 3000 psi (Ref. 1)

Normal uncertainty = (0.03) (3000) = 90 psi

P_{SAT} = 1498 + 90 = 1588 psi

B. RCS PRESSURE VALUES

4. Setpoint/Value Description: Saturation pressure corresponding to full power RCS hot leg temperature, including allowances for normal channel accuracy and post accident transmitter errors.

Determined Setpoint/Value: 1888 psig

Specific Instrument Usage: Wide Range RCS Pressure

Guidelines: FR-I.3(3)

References/Sources:
1. Instrument Uncertainty, W provided
2. "RCS Saturation Pressure with normal accuracy" calculation, B3

Assumption(s):

Calculation(s): Following Ref. 2 calculations

P_{SAT} (T_{HL}) = 1498 psig

Wide range pressure uncertainty under adverse conditions = 13% of 3000 psi span (Ref. 1)

Adverse uncertainty = (0.13) (3000) = 390 psi

P_{SAT} = 1498 + 390 = 1888 psig

SETPOINT DOCUMENTATION SHEET

B. RCS PRESSURE VALUES

5. Setpoint/Value Description: Value for the shutoff head pressure of the high-head SI pumps, including allowances for normal channel accuracy.

Determined Setpoint/Value: 1590 psig

Specific Instrument Usage: Wide Range RCS Pressure

Guidelines: E-0(2), E-1(10), ES-1.4(6), ECA-2.1(15)

References/Sources:
1. W provided
2. Instrument Uncertainty, W provided

Assumption(s):

Calculation(s): Shutoff head pressure of the high-head SI pumps = 1500 psig (Ref. 1)

Normal channel accuracy of Barton 763 = 3% of 3000 psi span = (0.03) 3000 psi = 90 psi (Ref. 2)

1500 psig + 90 psi = 1590 psig

B. RCS PRESSURE VALUES

6. Setpoint/Value Description: Value for the shutoff head pressure of the high-head SI pumps, including allowances for normal channel accuracy and post accident transmitter errors, not to exceed 2000 psig.

Determined Setpoint/Value: 1890 psig

Specific Instrument Usage: Wide Range RCS Pressure

Guidelines: E-0(3), E-1(11), ES-1.4(7), ECA-2.1(16)

References/Sources:
1. W provided
2. Instrument Uncertainty, W provided

Assumption(s):

Calculation(s): Shutoff head of high head SI pumps = 1500 psig (Ref. 1)
Wide range pressure uncertainty under adverse condition = 13% of 3000 psi span (Ref. 2)
Adverse Uncertainty = (.13) (3000) = 390 psi
1500 psig + 390 psi = 1890 psig

B. RCS PRESSURE VALUES

7. Setpoint/Value Description: Value for the shutoff head pressure of the low-head SI pumps, including allowances for normal channel accuracy.

Determined Setpoint/Value: 260 psig

Specific Instrument Usage: Wide Range RCS Pressure

Guidelines: E-0(4), E-1(15), ES-1.2(2), E-3(9), ECA-1.1(8), ECA-2.1(9), ECA-3.1(3), ECA-3.2(2), FR-C.2(2), FR-C.3(2)

References/Sources:
1. W provided
2. Instrument Uncertainty, W provided

Assumption(s):

Calculation(s): Shutoff head pressure at the low-head SI pumps = 170 psig (Ref. 1)
Normal channel accuracy of wide range RCS pressure
= 3% of 3000 psi span = (.03) (3000 psi) = 90 psi
170 psig + 90 psi = 260 psig

B. RCS PRESSURE VALUES

8. Setpoint/Value Description: Value for the shutoff head pressure of the low-head SI pumps, including allowances for normal channel accuracy and post accident transmitter errors.

Determined Setpoint/Value: 560 psig

Specific Instrument Usage: Wide Range RCS Pressure

Guidelines: E-0(5), E-1(16), ES-1.2(3), E-3(10), ECA-1.1(9), ECA-2.1(10), ECA-3.1(4), ECA-3.2(3), FR-C.2(3), FR-C.3(3)

References/Sources:
1. W provided
2. Instrument Uncertainty, W provided

Assumption(s):

Calculation(s): Shut off head pressure of the low-head SI pumps = 170 psig (Ref. 1)
adverse uncertainty of wide range RCS pressure = 13% of 3000 psi span = (.13) (3000 psi) = 390 psi
170 psig + 390 psi = 560 psig

SETPOINT DOCUMENTATION SHEET

C. RCS PRESSURE-TEMPERATURE LIMITS

1. Setpoint/Value Description: Limitation as described in background document for ES-0.2, NATURAL CIRCULATION COOLDOWN,(also ES-0.3 and ES-0.4).

Determined Setpoint/Value: Within acceptable limits of cooldown. See Figure ES02-1

Specific Instrument Usage: RCS Wide Range Temperature
RCS Wide Range Pressure

Guidelines: ES-0.2(4), ES-0.3(4), ES-0.4(4)

References/Sources:
1. Technical Specifications, Figure 3.1-2
2. Background Document ES-0.2, Step 6
3. Calculation for "Maximum cooldown with natural circulation", H1

Assumption(s):
1. Use 60°F/hr pressure and temperature limits for conservatism but cooldown at 25°F/hr

Calculation(s): Per Ref. 2, stay with Technical Specification limits for normal cooldown. Use 60°F/hr pressure and temperature limits as presented on Figure ES02-1 (Ass. 1)

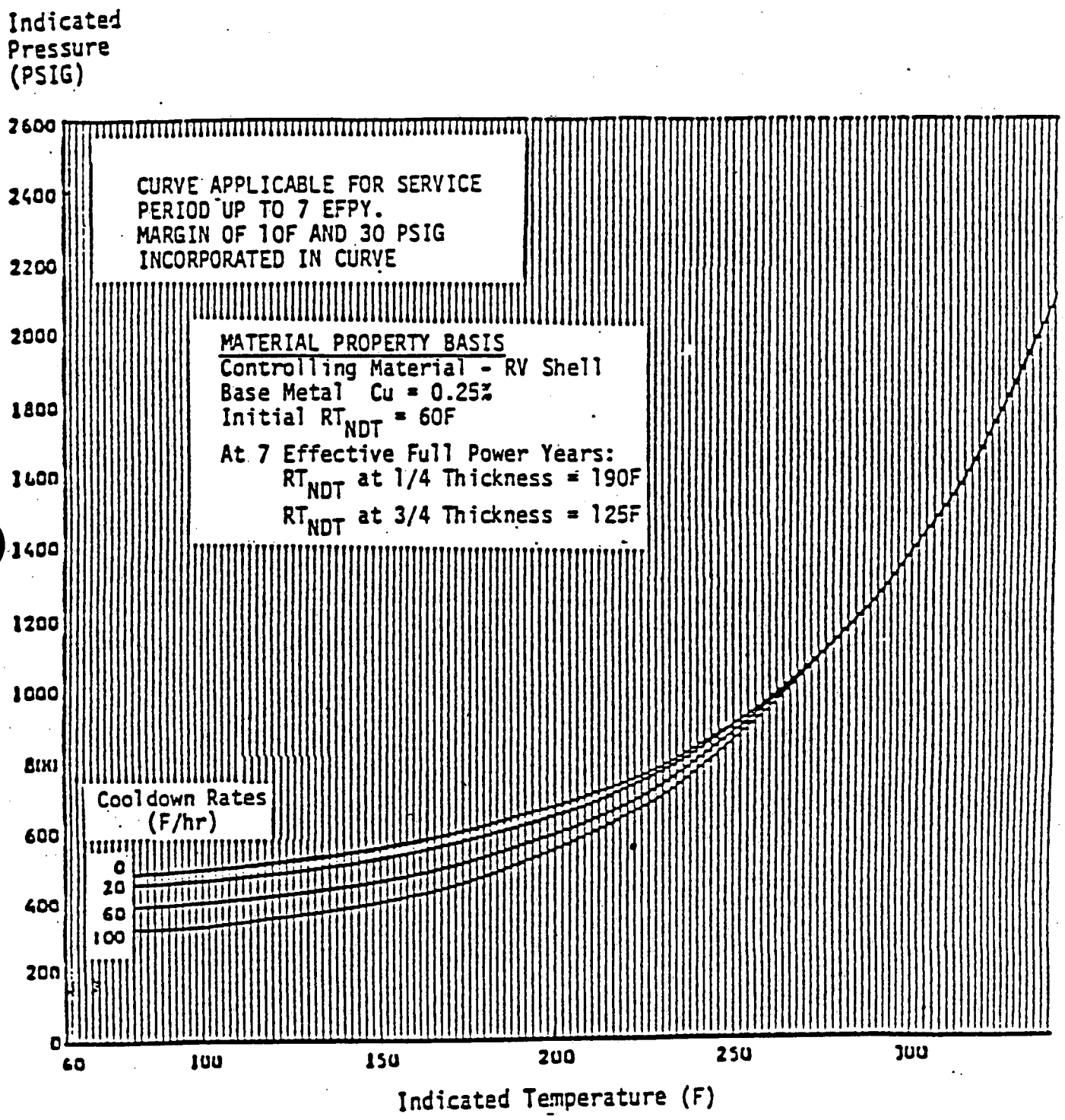

FIGURE ES02-1, REACTOR COOLANT SYSTEM COOLDOWN LIMITATIONS

C. RCS PRESSURE-TEMPERATURE LIMITS

2. Setpoint/Value Description: POST-SOAK COOLDOWN LIMIT curve, refer to background document for FR-P.1, RESPONSE TO IMMINENT PRESSURIZED THERMAL SHOCK CONDITION. Curve would be similar to Figure FRP1-1.

Determined Setpoint/Value: See Figures FRP1-3 and FRP1-4

Specific Instrument Usage: RCS Cold Leg WR Temperature
RCS Wide Range Pressure

Guidelines: FR-P.1(Fig. FRP1-1)

References/Sources:
1. Background Document FR-P.1
2. Instrument Uncertainty, W provided
3. W provided
4. ASME Steam Tables
5. Calculation for "Sum of temperature and pressure errors with normal channel accuracy", R1

Assumption(s):

Calculation(s): Indian Point Unit 2 is a category 2 plant, 200°F < RT_{NDT} ≤ 250°F

FR-P.1 is a red safety function status for Category 2 plant.

RCS Pressure - Temperature limits are between minimum subcooling and 200°F subcooling minus channel accuracy (Table 1 of Ref. 1)

Table 1 summarizes operating range for normal and adverse conditions. Figures FRP1-3 and FRP1-4 present the post-soak cooldown limit curves for normal and adverse conditions.

Note that no operating range exist for adverse conditon with low pressure. Hence cooldown should wait for return to normal containment conditions. The instrument condition should be assessed to give more operating margin for less severe containment conditions.

Table 1 Operating Range for Post-Soak Cooldown

RCS Pressure		Nominal T_{sat}	T_{sat} - Accuracy* (°F)		T_{sat} - 200 + Accuracy** (°F)	
Psia	Psig	(°F)	Normal	Adverse	Normal	Adverse
15	0	212.0	187	187	134	248
100	85	327.8	209	209	184	282
200	185	381.8	328	210	224	292
300	285	417.4	377	210	253	307
400	385	444.6	409	210	278	324
500	485	467.0	435	332	298	337
600	585	486.2	455	382	316	351
700	685	503.1	473	416	332	363
800	785	518.2	489	442	346	374
900	885	532.0	504	464	360	385
1000	985	544.6	517	482	372	395
1100	1085	556.3	529	498	384	405
1200	1185	567.2	540	513	394	413
1300	1285	577.4	550	526	404	421
1400	1385	587.1	560	538	414	429
1500	1485	596.2	570	550	423	436
1600	1585	604.9	578	560	432	444
1700	1685	613.1	587	570	440	451
1800	1785	621.0	595	579	448	458
1900	1885	628.6	602	588	455	465
2000	1985	635.8	610	596	462	472
2100	2085	642.8	617	604	469	479
2200	2185	649.5	624	612	476	485
2300	2285	655.9	630	619	482	491
2400	2385	662.1	636	626	488	497
2500	2485	668.1	642	633	494	503

* Subcooling uncertainty evaluated at RCS pressure

** Calculations presented in Table 2

Table 2 Calculation of T_{sat} - 200 + Accuracy

RCS Pressure (Psig)	Nominal T_{sat} (°F)	Accuracy (°F)* Normal	Accuracy (°F)* Adverse	T_{sat} - 200 + Accuracy (°F) Normal	T_{sat} - 200 + Accuracy (°F) Adverse
0	212.0	122	236	134	248
85	327.8	56	154	184	282
185	381.8	42	110	224	292
285	417.4	36	90	253	307
385	444.6	33	79	278	324
485	467.0	31	70	298	337
585	486.2	30	65	316	351
685	503.1	29	60	332	363
785	518.2	28	56	346	374
885	532.0	27.8	53	360	385
985	544.6	27.5	51	372	395
1085	556.3	27.2	48	384	405
1185	567.2	27.0	46	394	413
1285	577.4	26.8	44	404	421
1385	587.1	26.7	42	414	429
1485	596.2	26.6	40	423	436
1585	604.9	26.5	39	432	444
1685	613.1	26.4	38	440	451
1785	621.0	26.3	37	448	458
1885	628.6	26.2	36	455	465
1985	635.8	26.1	36	462	472
2085	642.8	26.1	36	469	479
2185	649.5	26.0	35	476	485
2285	655.9	26.0	35	482	491
2385	662.1	25.9	35	488	497
2485	668.1	25.9	35	494	503

* Subcooling uncertainty evaluated at RCS pressure plus uncertainty

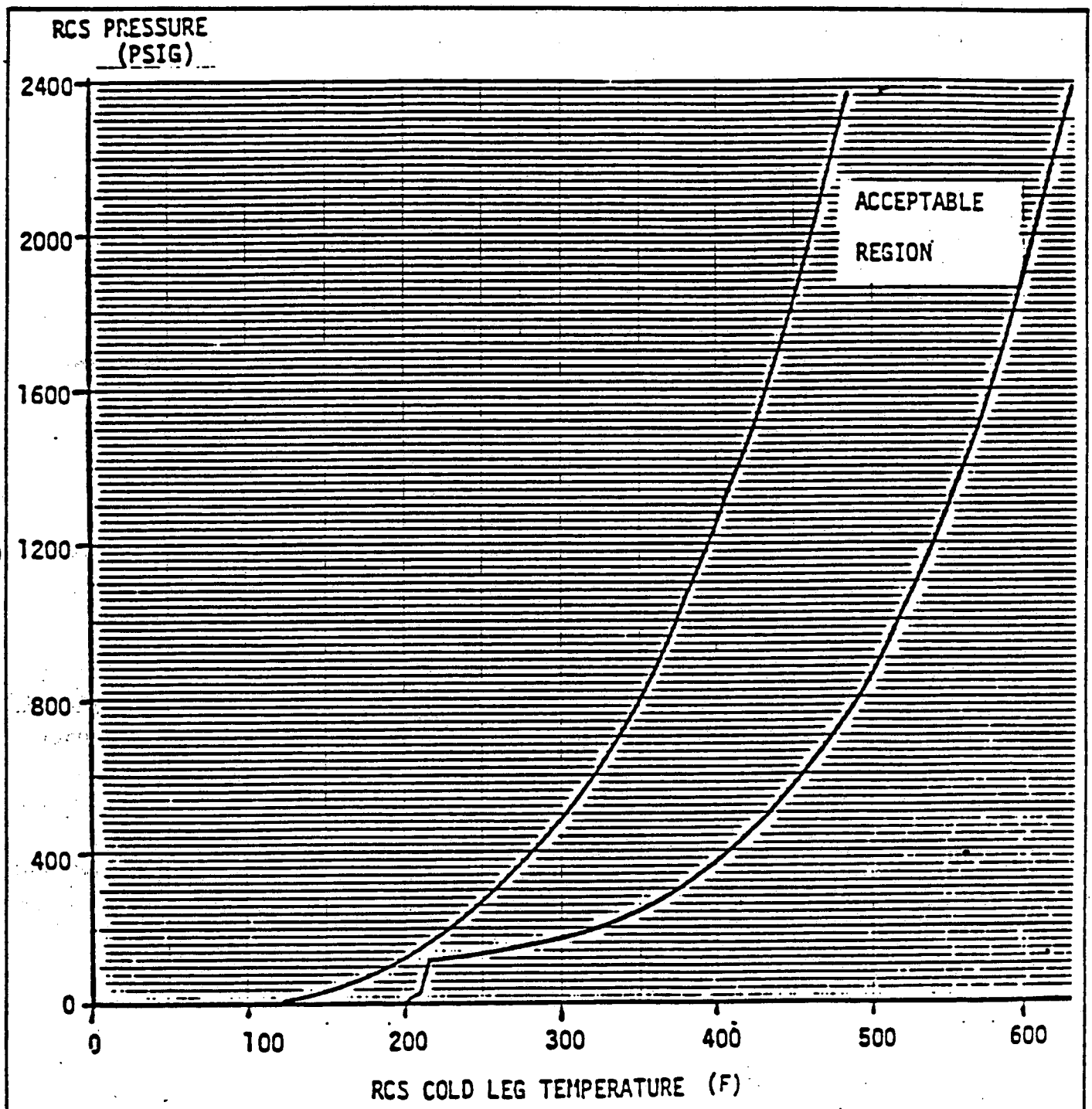

FIGURE FRP1-3, POST-SOAK COOLDOWN LIMIT

Number:	Title:	Revision Number:
FR-P.1	RESPONSE TO IMMINENT PRESSURIZED THERMAL SHOCK CONDITION	REV. 0

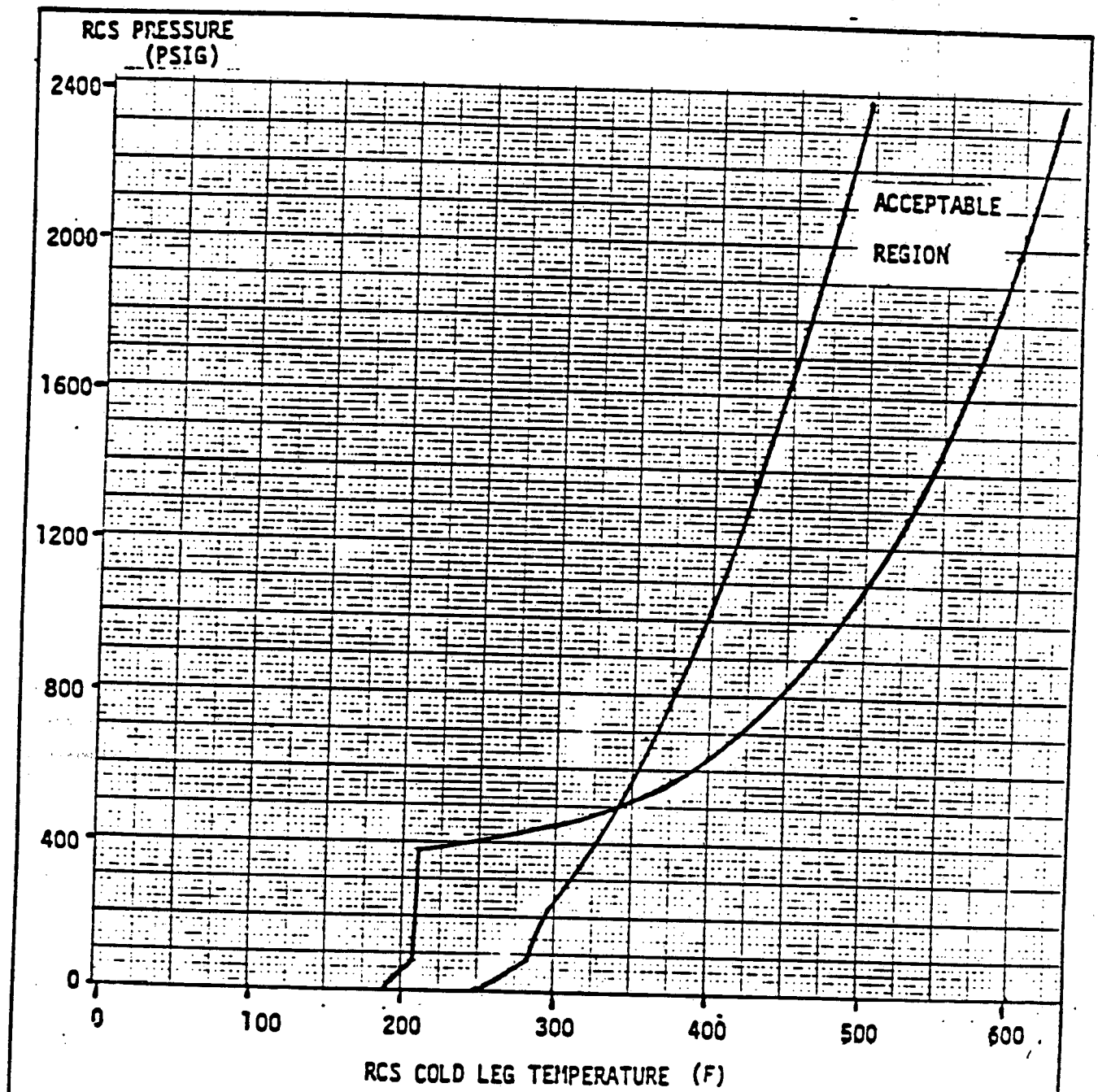

FIGURE FRP1-4, POST-SOAK COOLDOWN LIMIT

2-012585

8273/0908Z:7

SETPOINT DOCUMENTATION SHEET

C. RCS PRESSURE-TEMPERATURE LIMITS

3. Setpoint/Value Description: COOLDOWN LIMIT curve, refer to background document for FR-P.2, RESPONSE TO ANTICIPATED PRESSURIZED THERMAL SHOCK CONDITION. Curve would be similar to Figure FRP2-1.

Determined Setpoint/Value: See Figures FRP2-2 and FRP2-3

Specific Instrument Usage: RCS Cold Leg WR Temperature
RCS Wide Range Pressure

Guidelines: FR-P.2(Fig. FRP2-1)

References/Sources:
1. Background Document FR-P.2
2. Calculation for "Post Soak Cooldown Limit", C2

Assumption(s):

Calculation(s): Follow calculation for Ref. 2 except FR-P.2 is yellow safety function status and lower range is 275°F subcooling, Table 1 summarizes range of operability. Figures FRP2-2 and FRP2-3 present the cooldown limit curves for normal and adverse conditions.

Table 1

RCS Pressure (Psig)	T_{sat} - Accuracy (°F) Normal	T_{sat} - Accuracy (°F) Adverse	T_{sat} - 275 + Accuracy (°F) Normal	T_{sat} - 275 + Accuracy (°F) Adverse
0	187	187	59	173
85	209	209	109	205
185	328	210	149	215
285	377	210	178	232
385	409	210	203	249
485	435	332	223	262
585	455	382	241	276
685	473	416	257	288
785	489	442	271	299
885	504	464	285	310
985	517	482	297	320
1085	529	498	309	330
1185	540	513	319	338
1285	550	526	329	346
1385	560	538	339	354
1485	570	550	348	361
1585	578	560	357	369
1685	587	570	365	376
1785	595	579	373	383
1885	602	588	380	390
1985	610	596	387	397
2085	617	604	394	404
2185	624	612	401	410
2285	630	619	407	416
2385	636	626	413	422
2485	642	633	419	428

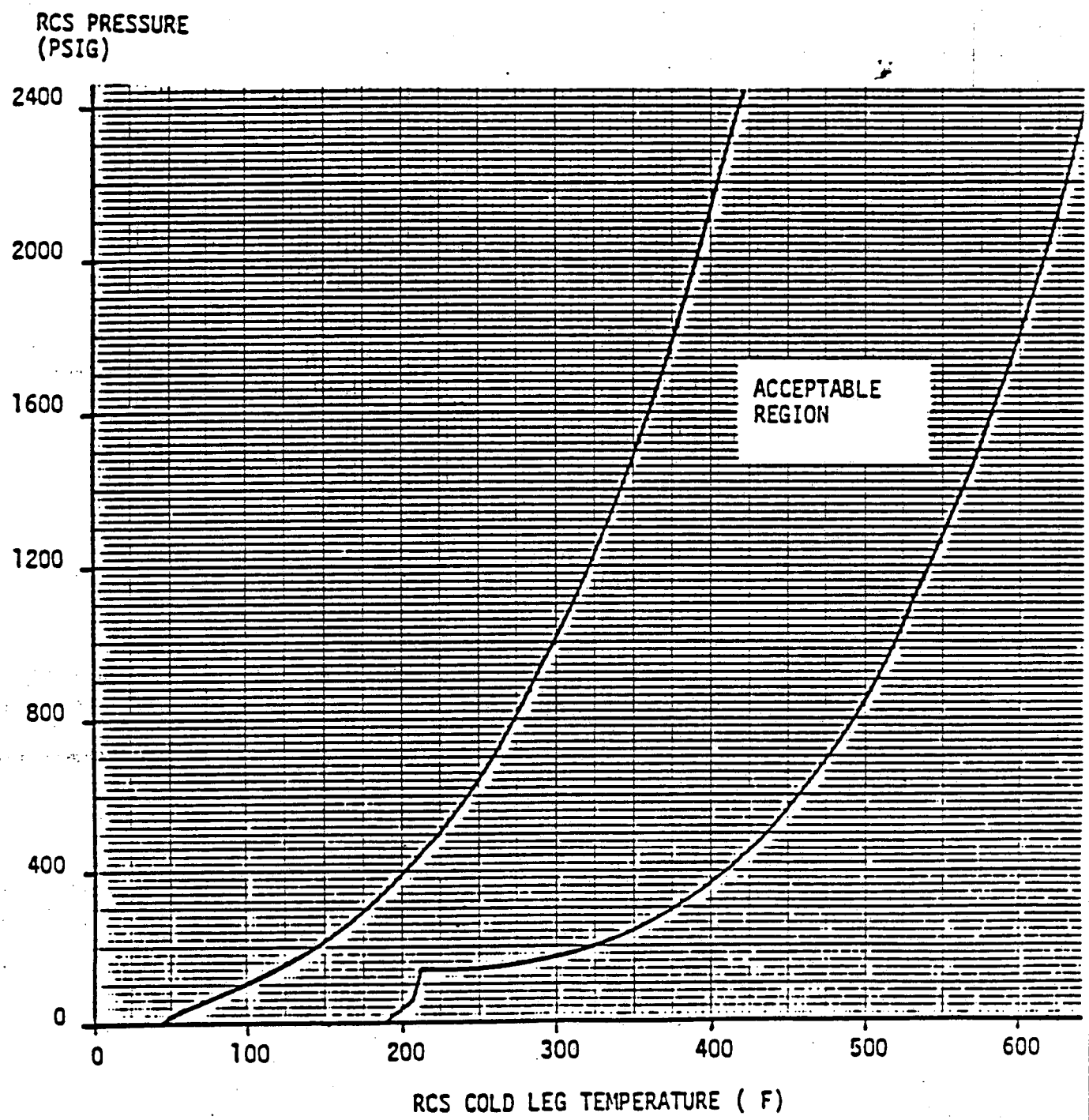

FIGURE FRP2-2, COOLDOWN LIMITS CURVE

Number:	Title:	Revision Number:
FR-P.2	RESPONSE TO ANTICIPATED PRESSURIZED THERMAL SHOCK CONDITION	REV. 0

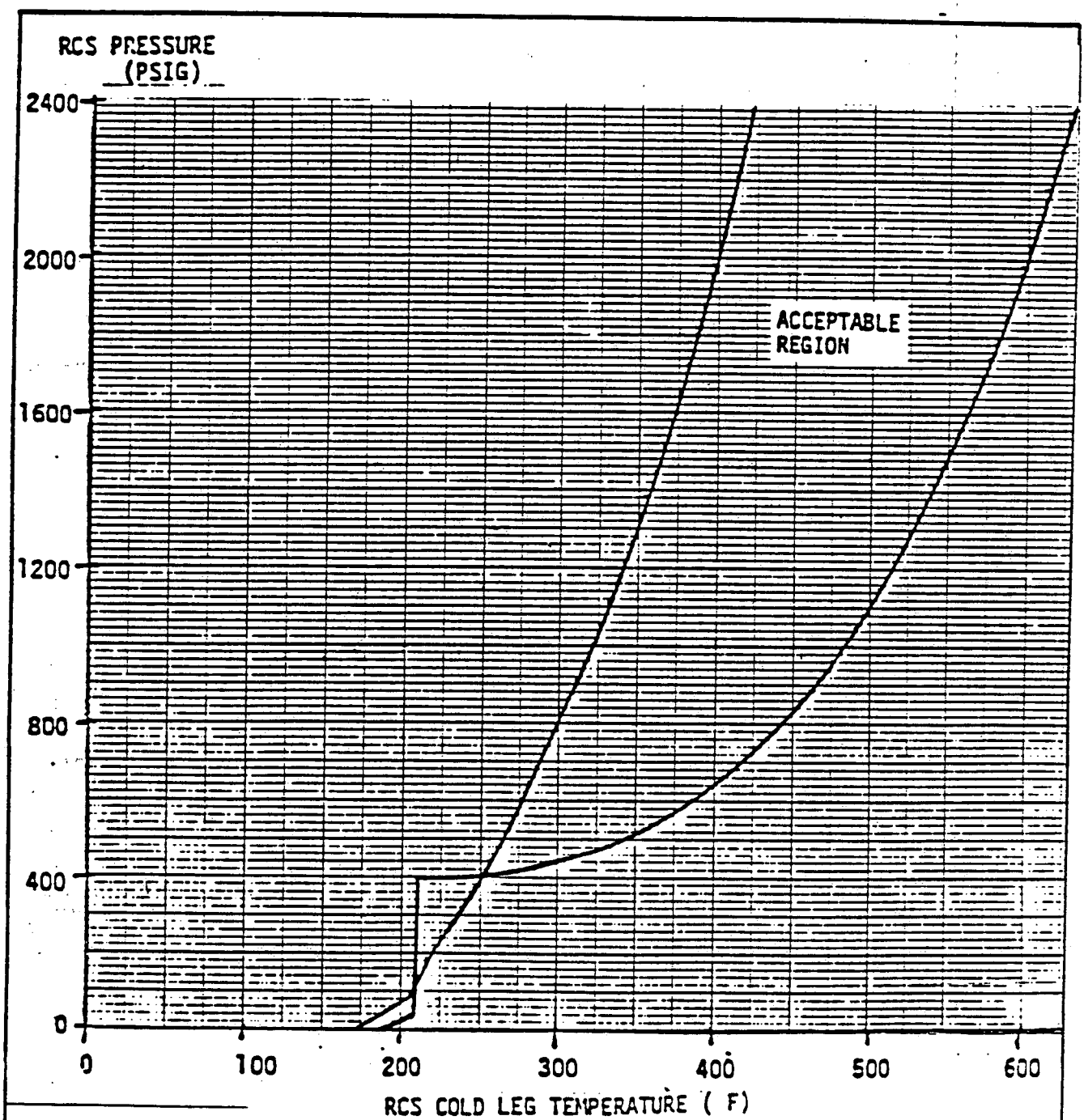

FIGURE FRP2-3, COOLDOWN LIMITS CURVE

2-012585

8285/0920Z:7

C. RCS PRESSURE-TEMPERATURE LIMITS

4. Setpoint/Value Description: Limit A curve corresponding to the generic category which bounds plant specific vessel RT_{NDT}, including temperature normal channel accuracy and post-accident transmitter errors.

Determined Setpoint/Value: See Table 1

Specific Instrument Usage: RCS Cold Leg Wide Range Temperature
RCS Wide Range Pressure

Guidelines: F-0.4

References/Sources: 1. Background Doucment F-0.4, Figure 5
2. Instrument Uncertainty, W provided

Assumption(s):

Calculation(s): Per Ref. 3 Indian Point 2 is a category 2 plant
Limit A curve is nominal values from Ref. 1 plus normal temperature accuracy from Ref. 2.
Adverse accuracy from WR RTD temperature is 3.60% of 700°F span:
(.036) (700°F) = 25.2°F Use 26°F
Table 1 summarizes the results

Table 1

RCS Pressure (Psig)	CL Temperature (°F)	CL Temperature + Uncertainty (°F)
0	209	235
1100	228	254
2200	246	272
2560	261	287

STEP	ACTION/EXPECTED RESPONSE	RESPONSE NOT OBTAINED

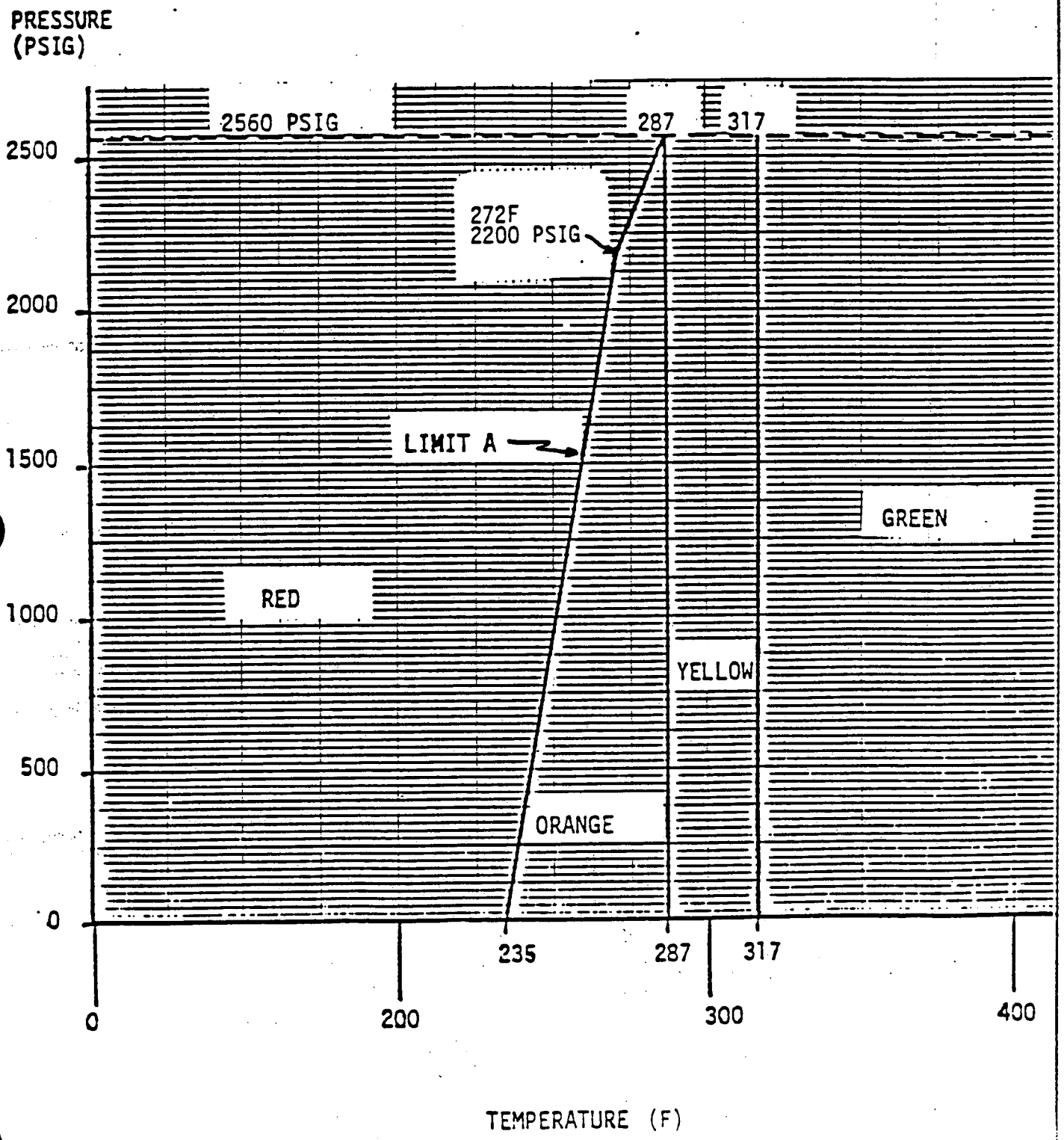

FIGURE F04-1, INTEGRITY OPERATIONAL LIMITS

SETPOINT DOCUMENTATION SHEET

C. RCS PRESSURE-TEMPERATURE LIMITS

5. Setpoint/Value Description: Cold overpressure limit used in F-0.4, INTEGRITY.

Determined Setpoint/Value: See Figure.

Specific Instrument Usage: Cold Leg RCS Wide Range Temperature

Guidelines: F-0.4

References/Sources: 1. IPP Graph Books RCS-16, "OPS Operability Requirements"

Assumption(s):

Calculation(s): Cold overpressure limit is presented in the attached Figure (Ref. 1). (Figure not actually required here since status tree checks to see if cold overpressure system is in service.)

Figure 3.1.A-1

PORV OPENING PRESSURE FOR OPERATION LESS THAN OR EQUAL TO 310°F

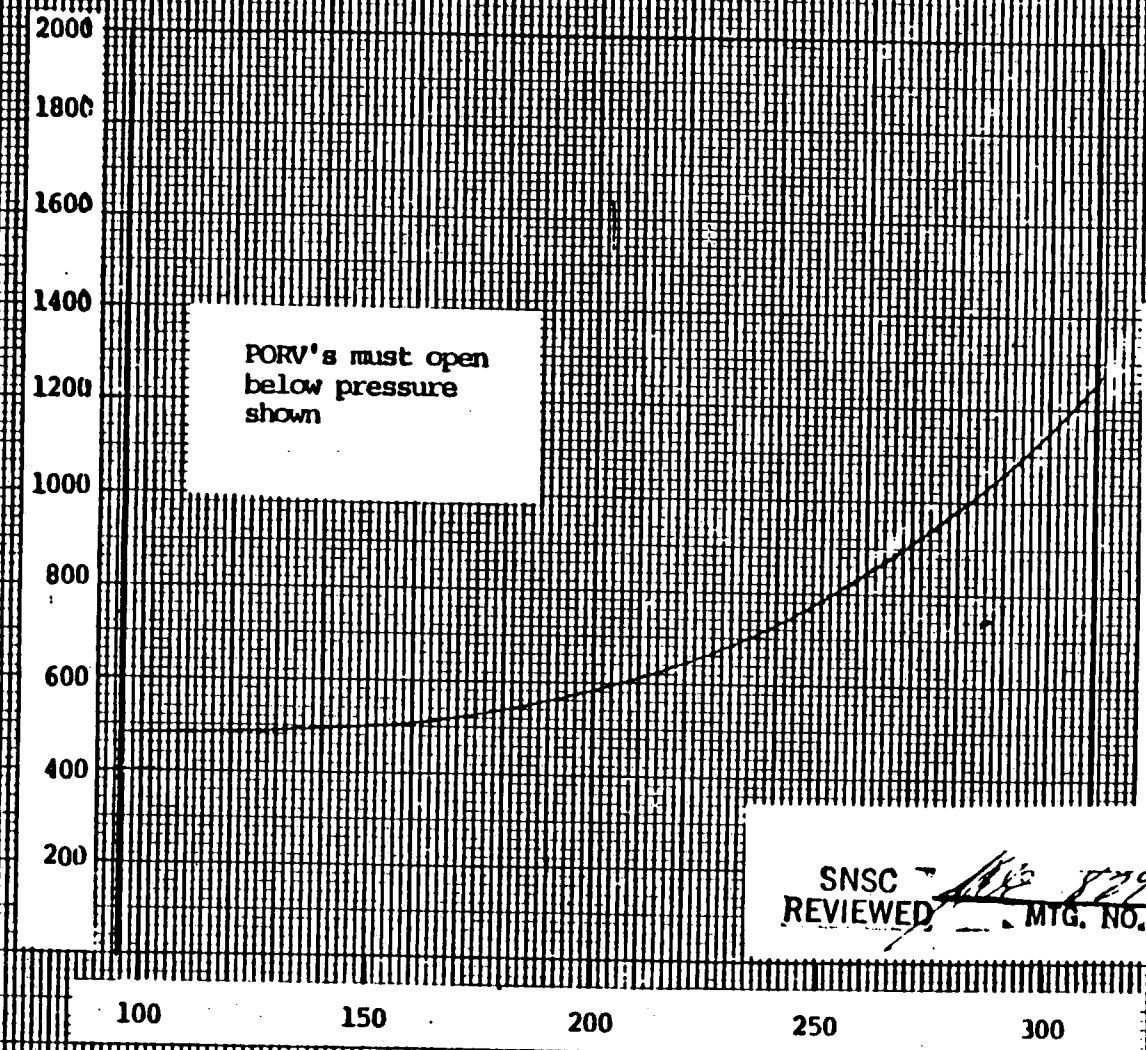

Notes:

1. Applicable through 7EFPYs.
2. No allowance for instrument error included on this curve.

SNSC REVIEWED 829 MTG. NO. 5/15/89 DATE

Amendment No.

CONTROLLED COPY

SETPOINT DOCUMENTATION SHEET

D. PRESSURIZER LEVEL VALUES

1. Setpoint/Value Description: No-load PRZR level.

Determined Setpoint/Value: 23% of span

Specific Instrument Usage: Pressurizer Level

Guidelines: ES-0.1(7), ES-0.2(7)

References/Sources:
1. PLS Document, P-1-14
2. IPP Abnormal Operating Instruction A-4-A, pg. 3.
3. IPP System Description No. 1, "Reactor Coolant System", pg. 71

Assumption(s):

Calculation(s): Pressurizer level is 23.1% at no-load conditions per Ref. 1 and 3.
No-load pressurizer level = 23% from Ref. 2
Use 23%

SETPOINT DOCUMENTATION SHEET

D. PRESSURIZER LEVEL VALUES

2. Setpoint/Value Description: PRZR low level letdown isolation setpoint.

Determined Setpoint/Value: Pressurizer Level = 18% of span

Specific Instrument Usage: Pressurizer Level

Guidelines: ES-0.1(6), FR-I.2(2), F-0.6(2)

References/Sources:
1. PLS Document, P-1-14.
2. Abnormal Operating Instruction A-4-B-1, pg. 4.

Assumption(s):
1. Level for heater cutout is the level for letdown isolation.

Calculation(s): Pressurizer low level letdown isolation setpoint is 18% of level span per Ref. 1 and 2.

SETPOINT DOCUMENTATION SHEET

D. PRESSURIZER LEVEL VALUES

3. Setpoint/Value Description: PRZR high level reactor trip setpoint.

Determined Setpoint/Value: 92% of span

Specific Instrument Usage: Pressurizer Level

Guidelines: FR-P.1(14), FR-I.1(4), F-0.6(1)

References/Sources:
1. PLS Document, P-1-9.
2. Technical Specifications, pg. 2.3-3.
3. Abnormal Operating Instruction A-10-Q, pg. 1.
4. IPP System Description No. 28, "Overall Unit Protection System", pg. 38.

Assumption(s):

Calculation(s): High pressurizer water level = 92% (Ref. 1 to 4)

D. PRESSURIZER LEVEL VALUES

4. Setpoint/Value Description: Value showing PRZR level just in range including allowances for normal channel accuracy.

Determined Setpoint/Value: 4% of span

Specific Instrument Usage: Pressurizer Level

Guidelines: E-0(15), ES-0.4(11), E-1(12), ES-1.1(3), ES-1.2(16), ES-1.4(8), E-3(17), ES-3.1(3), ES-3.2(3), ES-3.3(3), ECA-0.0(17), ECA-0.1(4), ECA-2.1(17), ECA-3.1(20), ECA-3.2(11), ECA-3.3(7), FR-H.1(12)

References/Sources: Instrument Uncertainty, W provided

Assumption(s):

Calculation(s): Low range of level = 0%
Normal accuracy = 3.64% (Ref. 1)
Level = 0% + 3.64%
Use 4%

SETPOINT DOCUMENTATION SHEET

D. PRESSURIZER LEVEL VALUES

5. Setpoint/Value Description: Value showing PRZR level just in range, including allowances for normal channel accuracy, post accident transmitter errors, and reference leg process errors, not to exceed 50%.

Determined Setpoint/Value: 36% of span

Specific Instrument Usage: Pressurizer Level

Guidelines: ES-0.4(12), E-1(13), ES-1.1(4), ES-1.2(17), ES-1.4(9), E-3(18), ES-3.1(4), ES-3.2(5), ES-3.3(4), ECA-0.0(18), ECA-0.1(5), ECA-2.1(18), ECA-3.1(21), ECA-3.2(12), ECA-3.3(8), FR-H.1(13)

References/Sources:
1. Instrument Uncertainty, W provided
2. IPP FSAR Containment Aanlysis
3. IPP FSAR pg. 6.3-1

Assumption(s):

Calculation(s): Low range of level = 0%

Adverse accuracy = 18.64% (Ref. 1)

Span of Reference Leg conditions are

minimum Containment temperature = 70°F (room temperature)

maximum containment temperature = 274°F (Ref. 2)

Maximum RCS pressure = 2500 psia (safety valve setpoint)

At 0% of span, range of reference leg error is -19% to 17%

Use maximum 17%

Maximum indicated level = 0% + 18.64% + 17%

= 35.64%

Use 36%

D. PRESSURIZER LEVEL VALUES

6. Setpoint/Value Description: Value showing PRZR level just covering the heaters, including all allowances for normal channel accuracy.

Determined Setpoint/Value: 18% of span

Specific Instrument Usage: Pressurizer Level

Guidelines: ES-1.1(5), ES-1.2(11), E-3(23), ES-3.1(12), ES-3.2(11), ES-3.3(11), ECA-0.1(6), ECA-2.1(19), ECA-3.1(15), FR-P.1(16), FR-I.3(4)

References/Sources:
1. PLS Document, P-1-14
2. IPP Abnormal Operating Instruction A-4-B-1, pg. 4.

Assumption(s):

Calculation(s): Pressurizer level just covering heaters including normal channel accuracy is 18% per Ref. 1 and 2.

D. PRESSURIZER LEVEL VALUES

7. Setpoint/Value Description: Value showing PRZR level just covering the heaters including allowances for normal channel accuracy, post accident transmitter errors, and reference leg process errors, not to exceed 50%.

Determined Setpoint/Value: 50% of span

Specific Instrument Usage: Pressurizer Level

Guidelines: ES-1.1(6), ES-1.2(12), E-3(24), ES-3.1(13), ES-3.2(12), ES-3.3(12), ECA-0.1(7), ECA-2.1(20), ECA-3.1(16), FR-P.1(17), FR-I.3(5)

References/Sources:
1. Instrument Uncertainty, W provided
2. "Pressurizer level just covering heaters including normal accuracy" calculation, D5.

Assumption(s):

Calculation(s): Level just covering heaters including normal channel accuracy = 18% (Ref. 2)
Normal accuracy = 3.64% (Ref. 1)
Normal heater level = 18 - 3.64 = 14.36%
Adverse uncertainty = 18.64%

Calculation(s) contd.: Use reference leg error for 0% PRZR level since it is conservative

From Ref. 2 range of reference leg error is -19% to 17%

Use 17%

Maximum indicated level = 14.36 + 18.64 + 17 = 50%

Use 50%

D. PRESSURIZER LEVEL VALUES

8. Setpoint/Value Description: Value showing PRZR level at the upper tap, including all allowances for normal channel accuracy, minus 20% for operating margin.

Determined Setpoint/Value: 76% of span

Specific Instrument Usage: Pressure Level

Guidelines: ES-1.2(14), E-3(19), ES-3.1(14), ES-3.2(13), ES-3.3(13), ECA-3.1(18), ECA-3.2(16)

References/Sources: 1. Instrument Uncertainty, W provided

Assumption(s):

Calculation(s): Upper tap level = 100%
operating margin = 20%
normal channel accuracy = 3.64% (Ref. 1)
100% - 20% - 3.64% = 76.36%
Use 76%

D. PRESSURIZER LEVEL VALUES

9. Setpoint/Value Description: Value showing PRZR level at the upper tap, including allowances for normal channel accuracy, post accident transmitter errors, and reference leg process errors, minus 20% for operating margin, but not less than 50%.

Determined Setpoint/Value: 65% of span

Specific Instrument Usage: Pressurizer Level

Guidelines: ES-1.2(15), E-3(20), ES-3.1(15), ES-3.2(14), ES-3.3(14), ECA-3.1(19), ECA-3.2(17)

References/Sources: 1. Instrument Uncertainty, W provided

Assumption(s):

Calculation(s): Upper tap level = 100%
Nominal level = 100% - 20% = 80%
Adverse uncertainty = 18.64% (Ref. 1)
Reference leg error for 75% level and the span of reference leg conditions,
Containment temperature 70°F - 280°F
Maximum RCS pressure = 2500 psia

Calculation(s) contd. is -5% < error < 50% (indicated level - Actual level) Use -5.0%

Minimum indicated level corresponding to an actual level of 80% = 80% - 18.64% - 5.0% = 56.36%

With adverse containment, a level of 56% allows 20% margin to filling the pressurizer but only 6% to draining the pressurizer. Therefore, the high level should be adjusted upward to balance this margin.
Use 12% for operating margin
100% - 12% - 18.64% - 5% = 65%

This allows 12% margin to filling the pressurizer and 15% margin to draining the pressurizer.

D. PRESSURIZER LEVEL VALUES

10. Setpoint/Value Description: PRZR level to accommodate upper head void collapse. Refer to document RCP TRIP/RESTART in Generic Issues section of the Executive Volume.

Determined Setpoint/Value: 54% of span

Specific Instrument Usage: Pressurizer Level

Guidelines: ES-0.3(1), ES-0.4(1), E-3(26), FR-I.3(7)

References/Sources:
1. RCP TRIP/RESTART in Generic Issues section of ERG Executive Volume, pg. 50.
2. Instrument Uncertainty, W provided
3. W provided.

Assumption(s):

Calculation(s): Type of the plant

4 loop with top hat upper support plate (Ref. 3)

From RCP TRIP/RESTART in Generic Issues (Ref. 1)

PRZR level = 57% including 7% instrument uncertainty

Normal accuracy = 3.64% (Ref. 2)

57% - 7% + 3.64 = 53.64%

Use 54%

SETPOINT DOCUMENTATION SHEET

D. PRESSURIZER LEVEL VALUES

11. Setpoint/Value Description: PRZR level to accomodate upper head void collapse, including allowances for post accident transmitter errors. Refer to document RCP TRIP/RESTART in Generic Issues section of the Executive Volume.

Determined Setpoint/Value: 73% of span

Specific Instrument Usage: Pressurizer Level

Guidelines: E-3(27), FR-I.3(8)

References/Sources:
1. RCP TRIP/RESTART in Generic Issues Section of ERG Rev. 1, Executive Volume, pg. 50.
2. Instrument Uncertainty, W provided

Assumption(s):

Calculation(s): Type of plant

4 loop with top hat upper support plate

From Ref. 1, PRZR = 57% with 7% instrument uncertainty

Adverse uncertainty = 18.64% (Ref. 2)

Span of reference leg conditions are

containment temperature 70°F - 280°F

RCS Pressure < 2500 psia

For 50% nominal PRZR level, the range of reference leg error is -2.5% to 32%

57% - 7% + 18.64% + 32% = 100.64%

For adverse containment, the minimum indicated level corresponding to the 100% acutal level is

100% - 18.64% - 8% = 73.36%

Use 73% to avoid filling the pressurizer.

D. PRESSURIZER LEVEL VALUES

12. Setpoint/Value Description: PRZR high level reactor trip setpoint, including allowances for normal channel accuracy, post accident transmitter errors, and reference leg process errors.

Determined Setpoint/Value: 69% of span

Specific Instrument Usage: Pressurizer Level

Guidelines: FR-P.1(15)

References/Sources:
1. Technical Specifications, pg. 2.3-3.
2. Instrument Uncertainty, W provided

Assumption(s):
1. High level trip setpoint includes normal channel accuracy.

Calculation(s): PRZR high level trip setpoint = 92% (Ref. 1)

Adverse uncertainty - normal uncertainty
= 18.64% - 3.64% = 15% (Ref. 2)

Span of reference leg conditions are:
containment temperature 70°F to 280°F
RCS pressure < 2500 psia

For 100% nominal PRZR level, the range of reference leg error is -8% to 63%
Use -8%

Minimum indicated level = 92% - 15% - 8% (Ass. 1)
= 69%

SETPOINT DOCUMENTATION SHEET

E. RCS TEMPERATURE VALUES

1. Setpoint/Value Description: Temperature setpoint below which cold overpressure protection system is in service.

Determined Setpoint/Value: 310°F

Specific Instrument Usage: Wide Range RCS Cold Leg Temperature

Guidelines: F-0.4 (3)

References/Sources: 1. IPP Graphs Book RCS-16 "OPS Operability Requirements"

Assumption(s):

Calculation(s): From Ref. 1, RCS cold leg temperature limit for OPS operation = 310°F

SETPOINT DOCUMENTATION SHEET

E. RCS TEMPERATURE VALUES

2. Setpoint/Value Description: Temperature requirement, including allowances for normal channel accuracy, for placing RHR System in service.

Determined Setpoint/Value: 350°F

Specific Instrument Usage: Wide Range RCS Hot Leg Temperature

Guidelines: ES-0.2(11), ES-0.3(6), ES-0.4(5), ES-1.2(23), ES-3.1(16), ES-3.2(9), ES-3.3(9), ECA-1.1(15), ECA-2.1(22), ECA-3.1(30), ECA-3.2(24), ECA-3.3(13), FR-H.1(4)

References/Sources:
1. Technical Specifications, pg. 3.1-3.
2. PLS Document, P-4-4.
3. IPP Abnormal Operating Instruction A-4, pg. 5.
4. W provided.
5. Instrument Uncertainty, W provided.
6. IPP Plant Operating Procedure POP-3.3.

Assumption(s):

Calculation(s): RHR in service at 350°F (Ref. 1, 2, 3 and 6)
RHR design temperature = 400°F (Ref. 4)
Normal uncertainty = (.036) 700°F = 25.2°F
There is sufficient margin for instrument uncertainty
Use 350°F

SETPOINT DOCUMENTATION SHEET

E. RCS TEMPERATURE VALUES

3. Setpoint/Value Description: Temperature requirement, including allowance for normal channel accuracy and post transmitter errors, for placing RHR System in service.

Determined Setpoint/Value: 350°F

Specific Instrument Usage: Wide Range RCS Hot Leg Temperature

Guidelines: ES-1.2(24), ES-3.1(17), ES-3.2(10), ES-3.3(10), ECA-1.1(16), ECA-2.1(23), ECA-3.1(31), ECA-3.2(25), ECA-3.3(14), FR-H.1(5)

References/Sources: 1. Technical Specifications, pg. 3.1-3.
2. PLS Document, p-4-4.

Assumption(s): 1. 350°F includes instrument uncertainty already and adverse uncertainty is equal to normal uncertainty

Calculation(s): RHR in service at 350°F (Ref. 1 and 2)
Use 350°F (Ass. 1)

SETPOINT DOCUMENTATION SHEET

E. RCS TEMPERATURE VALUES

4. Setpoint/Value Description: Low average temperature setpoint.

Determined Setpoint/Value: 541°F

Specific Instrument Usage: Narrow Range RCS Average Temperature

Guidelines: ES-0.1(4)

References/Sources:
1. PLS Document, P-1-11.
2. IPP Abnormal Operating Instruction A-1, pg. 3

Assumption(s):

Calculation(s): Low average temperature setpoint for feedwater control valve closure = 554°F (Ref. 1)
= 541°F (Ref. 2)

Use 541°F consistent with Emergency Procedure

E. RCS TEMPERATURE VALUES

5. Setpoint/Value Description: No-load temperature.

Determined Setpoint/Value: 547°F

Specific Instrument Usage: Narrow Range RCS Average Temperature

Guidelines: E-0(7), ES-0.1(1)

References/Sources:
1. W provided
2. PLS Document, P-1-11.
3. IPP Abnormal Operating Instruction A-1, pg. 3.

Assumption(s):

Calculation(s): No-load average temperature = 547°F (Ref. 1 to 3)

SETPOINT DOCUMENTATION SHEET

F. RCS HOT LEG TEMPERATURE VALUES (WIDE RANGE)

1. Setpoint/Value Description: Value corresponding to the saturation temperature of the lowest steamline safety valve setpoint, including allowances for normal channel accuracy. See guideline FR-H.2, RESPONSE TO STEAM GENERATOR OVERPRESSURE.

Determined Setpoint/Value: 528°F

Specific Instrument Usage: Wide Range RCS Hot Leg Temperature

Guidelines: FR-H.2(4)

References/Sources:
1. Instrument Uncertainty, W provided.
2. IPP System Description No. 18, "Main and Reheat Steam Systems", pg. 5.
3. ASME Steam Tables

Assumption(s):

Calculation(s): Lowest safety valve setpoint = 1065 psig (Ref. 2)
= 1080 psia

T_{sat} (1080 psia) = 554°F (Ref. 3)
Normal uncertainty = (.036) (700°F) = 25.2°F (Ref. 1)
554°F - 25.2°F = 528.8°F
Use 528°F

F. RCS HOT LEG TEMPERATURE VALUES (WIDE RANGE)

2. Setpoint/Value Description: Value corresponding to the saturation temperature of the lowest steamline safety valve setpoint, including allowances for normal channel accuracy and post accident transmitter errors. See guideline FR-H.2, RESPONSE TO STEAM GENERATOR OVERPRESSURE.

Determined Setpoint/Value: 528°F

Specific Instrument Usage: Wide Range RCS Hot Leg Temperature

Guidelines: FR-H.2(5)

References/Sources:
1. Calculation for "Saturation temperature at lowest steamline safety valve setpoints including normal channel accuracy," F1.
2. Instrument Uncertainty, W provided.

Assumption(s):

Calculation(s): Adverse uncertainty = Normal uncertainty (Ref. 2)
So use 528°F as calculated in Ref. 1

G. CORE EXIT TEMPERATURE VALUES

1. Setpoint/Value Description: Temperatures corresponding to 20°F subcooling at the ruptured SG pressure including allowances for normal channel accuracy. Refer to background document for guideline E-3, STEAM GENERATOR TUBE RUPTURE.

Determined Setpoint/Value: See Table E3-1

Specific Instrument Usage: Ruptured SG Pressure
Wide Range RTD

Guidelines: E-3(13)

References/Sources:
1. Background Document E-3, Step 14.
2. Instrument Uncertainty, W provided.
3. ASME Steam Table.

Assumption(s):

Calculation(s): Table E3-1 tabulates temperatures at 20°F subcooling plus subcooling errors based on RTD and RCS pressure for normal and adverse conditions (Ref. 1, 2)

Table E3-1

S/G Pressure (psig)	S/G Pressure (psia)	T_{sat} (°F)	Core Exit Temperature - 20°F - Uncertainty (°F) Normal (°F)	Adverse (°F)
1200	1215	569	521	494
1100	1115	558	510	480
1000	1015	546	498	463
900	915	534	485	445
800	815	521	472	425
700	715	506	456	406
600	615	489	438	389
500	515	470	417	370
400	415	448	393	348

* The subcooling uncertainty corresponding to RCS pressure accuracy and RTD accuracy is used due to the subcooling requirement for the SI termination in the following E-3 steps.

Presure (psia)	Subcooling error (°F) Normal	Adverse
1200	27.20	54.24
1100	27.47	57.88
1000	27.82	62.40
900	28.25	68.22
800	28.83	75.98
700	29.62	86.94
600	30.75	103.88
500	32.46	135.09
400	35.30	253.14

G. CORE EXIT TEMPERATURE VALUES

2. Setpoint/Value Description: Temperatures corresponding to 20°F subcooling at the ruptured SG pressure including allowances for normal channel accuracy and post accident transmitter errors not to exceed 100°F. Refer to background document for guideline E-3, STEAM GENERATOR TUBE RUPTURE.

Determined Setpoint/Value: See Table E3-1 of Ref. 2

Specific Instrument Usage:
1. Ruptured SG Pressure
2. Wide Range RTD

Guidelines: E-3(14)

References/Sources:
1. Instrument Uncertainty, W provided.
2. Calculation for "Temperature corresponding to 20°F subcooling at the ruptured SG pressure including normal accuracy", G1.

Assumption(s):

Calculation(s): See Table E3-1 in Ref. 2.

SETPOINT DOCUMENTATION SHEET

H. MAXIMUM RATE VALUES

1. Setpoint/Value Description: Maximum cooldown rate in natural circulation - no voiding in head. See background document for guideline ES-0.2, NATURAL CIRCULATION COOLDOWN.

Determined Setpoint/Value: 25°F/hr

Specific Instrument Usage: RCS Cold Leg Temperature

Guidelines: ES-0.2(2)

References/Sources: 1. Background Document ES-0.2 and Appendix A.

Assumption(s):

Calculation(s): For T_{hot} upper head plants
Maximum cooldown rate = 25°F/hr

SETPOINT DOCUMENTATION SHEET

I. COLD LEG TEMPERATURE VALUES (WIDE RANGE)

1. Setpoint/Value Description: Value corresponding to temperature T1, including allowances for normal channel accuracy and post-accident transmitter errors. Refer to background document for status tree F-0.4, INTEGRITY.

Determined Setpoint/Value: 287°F

Specific Instrument Usage: Cold Leg RCS Wide Range Temperature

Guidelines: ES-0.4(16), ES-1.4(11), ES-3.3(23), ECA-2.1(27), ECA-3.1(35), ECA-3.2(29), ECA-3.3(25), F-0.4(1)

References/Sources:
1. "Post Soak Cooldown Limit" Calculation, C2
2. Background Document F-0.4, Fig. 5.
3. Instrument Uncertainty W provided.

Assumption(s):

Calculation(s): From Ref. 1 IP2 is a category II plant
T1 = 261°F (Ref. 2)
Adverse uncertainty = (.036) (700) = 25.2°F
261°F + 25.2°F = 286.2°F
Use 287°F

SETPOINT DOCUMENTATION SHEET

I. COLD LEG TEMPERATURE VALUES (WIDE RANGE)

2. Setpoint/Value Description: Value corresponding to temperature T2, including allowances for normal channel accuracy and post-accident transmitter errors. Refer to background document for status tree F-0.4, INTEGRITY.

Determined Setpoint/Value: 317°F

Specific Instrument Usage: Cold Leg RCS Wide Range Temperature

Guidelines: F-0.4(2), ECA-0.0(10)

References/Sources:
1. W provided.
2. Instrument Uncertainty, W provided.
3. Background Document F-0.4, Fig. 5.

Assumption(s):

Calculation(s): From Ref. 1, IP2 is a Catergory II plant

T_2 = 291°F from Ref. 3

Adverse uncertainty = (.036) (700°F) = 25.2°F (Ref. 2)

291°F + 25.2°F = 316.2°F

Use 317°F

SETPOINT DOCUMENTATION SHEET

I. COLD LEG TEMPERATURE VALUES (WIDE RANGE)

3. Setpoint/Value Description: Value corresponding to temperature T2, including allowances for normal channel accuracy. Refer to background document for status tree F-0.4, INTEGRITY.

Determined Setpoint/Value: 317°F

Specific Instrument Usage: Cold Leg RCS Wide Range Temperature

Guidelines: ECA-0.0(9)

References/Sources:
1. "Post Soak Cooldown Limit" Calculation, C2.
2. Instrument Uncertainty, W provided.
3. Background Document F-0.4.

Assumption(s): 1. Add uncertainty to assure temperature is above 291°F

Calculation(s): Per Ref. 1, IP2 is a Category II plant

T_2 = 291°F (Ref. 3)

Normal accuracy = (.036) (700°F) = 25.2°F

291°F + 25.2°F = 316.2°F (Ass. 1)

Use 317°F

SETPOINT DOCUMENTATION SHEET

J. RVLIS NATURAL CIRCULATION RANGE VALUES

1. Setpoint/Value Description: Value indicating upper head region full.

Determined Setpoint/Value: 100%

Specific Instrument Usage: Natural Circulation Range RVLIS

Guidelines: E-3(25), FR-I.3(6), F-0.6(3)

References/Sources: 1. W provided.
2. W provided.

Assumption(s):

Calculation(s): Nominal RVLIS value without a void = 107% (Ref. 1)
Per Ref. 2, instrument uncertainty = 6%
107% - 6% = 101%
Use 100%

K. RVLIS NATURAL CIRCULATION RANGE VALUES

1. Setpoint/Value Description: Value which is 3.5 feet above the bottom of active fuel in core with zero void fraction, including allowances for normal channel accuracy.

Determined Setpoint/Value: 39%

Specific Instrument Usage: Natural Circulation Range RVLIS

Guidelines: ES-0.4(13), ES-1.4(10), ES-3.3(22), ECA-2.1(26), ECA-3.1(34), ECA-3.2(28), ECA-3.3(24), FR-C.1(3), FR-C.2(9), F-0.2(2)

References/Sources: 1. W provided.

Assumption(s):

Calculation(s): Per Ref. 1, 3.5 ft. above bottom of core plus uncertainties = 39%

SETPOINT DOCUMENTATION SHEET

K. RVLIS NATURAL CIRCULATION RANGE VALUES

2. Setpoint/Value Description: Value which is top of core, including allowances for normal channel accuracy.

Determined Setpoint/Value: 60%

Specific Instrument Usage: Natural Circulation Range

Guidelines: ECA-1.1(10), ECA-3.3(11), FR-C.1(9), FR-C.2(15), FR-P.1(8)

References/Sources: 1. W provided.

Assumption(s):

Calculation(s): Per Ref. 1, top of core plus uncertainties = 60%

K. RVLIS NATURAL CIRCULATION RANGE VALUES

3. Setpoint/Value Description: Value corresponding to the top of the hot legs including allowances for normal channel accuracy.

Determined Setpoint/Value: 75%

Specific Instrument Usage: Natural Circulation Range RVLIS

Guidelines: ES-0.3(5), ECA-3.2(14)

References/Sources: 1. W provided.

Assumption(s):

Calculation(s): Per Ref. 1, top of hot leg pipe plus uncertainties = 75%

L. RVLIS RCPs RUNNING RANGE VALUES

1. Setpoint/Value Description: Value corresponding to an average system void fraction of 50 percent with four RCPs running, including allowances for normal channel accurancy.

Determined Setpoint/Value: 44%

Specific Instrument Usage: RCPs Running Range RVLIS

Guidelines: FR-C.2(4), F-0.2(3)

References/Sources: 1. W provided.
2. W provided.

Assumption(s):

Calculation(s): 50% voids, 4 pumps on = 44% (Ref. 1 and 2)

L. RVLIS RCPs RUNNING RANGE VALUES

2. Setpoint/Value Description: Value corresponding to an average system void fraction of 50 percent with three RCPs running, including allowances for normal channel accuracy.

Determined Setpoint/Value: 30%

Specific Instrument Usage: RCPs Running Range RVLIS

Guidelines: FR-C.2(5), F-0.2(4)

References/Sources: 1. W provided.
2. W provided.

Assumption(s):

Calculation(s): 50% voids, 3 pumps on = 30% (Ref. 1 and 2)

L. RVLIS RCPs RUNNING RANGE VALUES

3. Setpoint/Value Description: Value corresponding to an average system void fraction of 50 percent with two RCPs running, including allowances for normal channel accuracy.

Determined Setpoint/Value: 20%

Specific Instrument Usage: RCPs Running Range RVLIS

Guidelines: FR-C.2(6), F-0.2(5)

References/Sources: 1. W provided.
2. W provided.

Assumption(s):

Calculation(s): 50% voids, 2 pumps on = 20% (Ref. 1 and 2)

L. RVLIS RCPs RUNNING RANGE VALUES

4. Setpoint/Value Description: Value corresponding to an average system void fraction of 50 percent with one RCP running, including allowances for normal channel accuracy.

Determined Setpoint/Value: 13%

Specific Instrument Usage: RCPs Running Range RVLIS

Guidelines: FR-C.2(7), F-0.2(6)

References/Sources: 1. W provided.
2. W provided.

Assumption(s):

Calculation(s): 50% voids, 1 pump on = 13% (Ref. 1 and 2)

L. RVLIS RCPs RUNNING RANGE VALUES

5. Setpoint/Value Description: Value corresponding to an average system void fraction of 25 percent with one RCP running, including allowances for normal channel accuracy.

Determined Setpoint/Value: 25%

Specific Instrument Usage: RCPs Running Range RVLIS

Guidelines: ECA-3.2(15)

References/Sources: 1. W provided.
2. W provided.

Assumption(s):

Calculation(s): 25% voids, 1 pump on = 25% (Ref. 1 and 2)

SETPOINT DOCUMENTATION SHEET

M. STEAM GENERATOR NARROW RANGE LEVEL VALUES

1. Setpoint/Value Description: Value corresponding to no-load SG level.

Determined Setpoint/Value: 39% of span

Specific Instrument Usage: Narrow Range SG Level

Guidelines: ES-0.2(3)

References/Sources: 1. PLS Document, p-1-15.

Assumption(s):

Calculation(s): No load SG level = 39% of span (Ref. 1)

M. STEAM GENERATOR NARROW RANGE LEVEL VALUES

2. Setpoint/Value Description: Value showing SG level just in the narrow range including allowances for normal channel accuracy.

Determined Setpoint/Value: 5% of span

Specific Instrument Usage: Narrow Range SG Level

Guidelines: E-0(8), ES-0.1(3), E-1(4), ES-1.1(8), ES-1.2(5), ES-1.4(4), E-3(4), ES-3.1(6), ES-3.2(6), ES-3.3(6), ECA-0.0(4), ECA-0.1(9), ECA-0.2(5), ECA-2.1(3), ECA-3.1(6), ECA-3.2(5), ECA-3.3(4), FR-C.1(5), FR-C.2(11), FR-H.1(6), FR-H.3(4), FR-H.5(1), FR-P.1(2), FR-P.2(2), F-0.3(1)

References/Sources: Instrument Uncertainty W provided.

Assumption(s): 1. Evaluate calibration error at 0% span 90°F (room temperature), 1100 psig (safety valve setpoint).

Calculation(s): SG level just in the narrow range = 0%
Normal channel accuracy = 3.64% (Ref. 1)
Calibration error = 1.0% (Ass. 1 and Ref. 1)
Level = 0% + 3.64% + 1.0% = 4.64%
Use 5%

M. STEAM GENERATOR NARROW RANGE LEVEL VALUES

3. Setpoint/Value Description: Value showing SG level just in the narrow range incuding allowances for normal channel accuracy, post accident transmitter errors, and reference leg process errors, not to exceed 50%.

Determined Setpoint/Value: 29% of span

Specific Instrument Usage: Narrow Range SG Level

Guidelines: E-0(9), ES-0.4(14), E-1(5), ES-1.1(9), ES-1.2(6), ES-1.4(5), E-3(5), ES-3.1(7), ES-3.2(7), ES-3.3(7), ECA-0.0(5), ECA-0.1(10), ECA-0.2(6), ECA-2.1(4), ECA-3.1(7), ECA-3.2(6), ECA-3.3(5), FR-C.1(6), FR-C.2(12), FR-H.1(7), FR-H.3(5), FR-H.5(2), FR-P.1(3), FR-P.2(3), F-0.3(1)

References/Sources:
1. W provided
2. IPP FSAR Containment Analysis

Assumption(s):

Calculation(s): SG level just in the narrow range = 0%
Adverse uncertainty = 18.64% (Ref. 1)
Span of ref. leg conditions
Containment temperature 70°F - 280°F (Ref. 2)
SG pressure 100 - 1100 psig
Maximum reference leg error is at 1100 psig, 280°F = 10%
Level = 0% + 18.64% + 10% = 28.64%
Use 29%

M. STEAM GENERATOR NARROW RANGE LEVEL VALUES

4. Setpoint/Value Description: Value corresponding to high-high SG level setpoint.

Determined Setpoint/Value: 75% of span

Specific Instrument Usage: Narrow Range SG Level

Guidelines: ES-3.1(9), ES-3.2(15), ES-3.3(15), ECA-3.1(25), ECA-3.2(19), ECA-3.3(1)

References/Sources:
1. PLS Document, P-1-15.
2. IPP System Description, No. 28, "Overall Unit Protection System", pg. 87.

Assumption(s):

Calculation(s): High-high SG level setpoint = 75% (Ref. 1 and 2)

M. STEAM GENERATOR NARROW RANGE LEVEL VALUES

5. Setpoint/Value Description: Value corresponding to high-high SG level setpoint including allowances for post accident transmitter errors and reference leg process errors, not less than 50%.

Determined Setpoint/Value: 57% of span

Specific Instrument Usage: Narrow Range SG Level

Guidelines: ES-3.1(10), ES-3.2(16), ES-3.3(16), ECA-3.1(26), ECA-3.2(20), ECA-3.3(2)

References/Sources:
1. PLS Document, P-1-15.
2. Instrument Uncertainty, W provided.
3. IPP System Description No. 28, "Overall Unit Protection System", pg. 87.

Assumption(s):
1. High-high SG Level setpoint includes normal channel accuracy.

Calculation(s): High-high SG level setpoint = 75% from Ref. 1 and 3.
Adverse uncertainty - normal uncertainty
= 18.64% -3.64% = 15% (Ref. 2)
Range of reference leg error for containment temperature 70°F - 280°F and SG pressure 100 - 1100 psig is -3% to 23.8% (Ref. 2)
Level = 75% - 15% - 3% = 57%
Use 57%

M. STEAM GENERATOR NARROW RANGE LEVEL VALUES

6. Setpoint/Value Description: Value for SG high-high level feedwater isolation setpoint.

Determined Setpoint/Value: 75% of span

Specific Instrument Usage: Narrow Range SG Level

Guidelines: FR-H.3(3), F-0.3(4)

References/Sources: 1. PLS Document, P-1-15.

Assumption(s):

Calculation(s): High-high SG level for feedwater valve closure = 75% of span. (Ref. 1)

M. STEAM GENERATOR NARROW RANGE LEVEL VALUES

7. Setpoint/Value Description: Value corresponding to SG level at the upper tap including allowances for normal channel accuracy.

Determined Setpoint/Value: 92%

Specific Instrument Usage: Narrow Range SG Level

Guidelines: ECA-3.1(13), ECA-3.3(17), FR-H.2(2), FR-H.3(1), FR-H.4(2)

References/Sources: 1. Instrument Uncertainty, W provided

Assumption(s): Evaluate calibration error at 100% span, 90°F, and 1100 psig

Calculation(s): Level at the upper tap = 100%
Normal channel accuracy = 3.64%
Calibration error = -4% (Ref. 1, Ass. 1)
Level = 100% -3.64% -4% = 92.36%
Use 92%

M. STEAM GENERATOR NARROW RANGE LEVEL VALUES

8. Setpoint/Value Description: Value corresponding to SG level at the upper tap including allowances for normal channel accuracy, post-accident transmitter errors, and reference leg process errors.

Determined Setpoint/Value: 77%

Specific Instrument Usage: Narrow Range SG Level

Guidelines: ECA-3.1(14), ECA-3.3(18), FR-H.2(3), FR-H.3(2), FR-H.4(3)

References/Sources: 1. Instrument Uncertainty, W provided

Assumption(s):

Calculation(s): Level at the upper tap = 100%
Span of reference leg conditions is containment temperature 70°F to 280°F and SG pressure 100 to 1100 psig

From Ref. 1, -4% < ref. leg error < 30%
Adverse uncertainty = 18.64% (Ref. 1)
Level = 100% -4% - 18.64% = 77.36%
Use 77%

N. STEAM GENERATOR WIDE RANGE LEVEL VALUES

1. Setpoint/Value Description: Value showing SG level just in the wide range, including allowances for normal channel accuracy.

Determined Setpoint/Value: 8% of span

Specific Instrument Usage: Wide Range SG Level

Guidelines: FR-H.5(4)

References/Sources: 1. Instrument Uncertainty, W provided.

Assumption(s): 1. Evaluate calibration error at 0% span, 90°F, and 1100 psig

Calculation(s): SG level just in the wide range = 0%
Normal channel accuracy = 3.64% (Ref. 1)
Calibration error = 3.9% (Ass. 1 and Ref. 1)
Level = 0 + 3.64% + 3.9% = 7.54%
Use 8%

N. STEAM GENERATOR WIDE RANGE LEVEL VALUES

2. Setpoint/Value Description: Value showing SG level just in the wide range, including allowances for normal channel accuracy, post accident transmitter errors and reference leg process errors.

Determined Setpoint/Value: 38% of span

Specific Instrument Usage: Wide Range SG Level

Guidelines: FR-H.5(5)

References/Sources: 1. Instrument Uncertainty, W provided.

Assumption(s):

Calculation(s): Level just in the wide range = 0%
Adverse uncertainty = 27.14%
Reference leg error for containment temperature
70°F -280°F and SG pressure 100 - 1100 psig
is 0% < error < 10.6%
Level = 0% + 27.14% + 10.6% = 37.74%
Use 38%

SETPOINT DOCUMENTATION SHEET

0. STEAM GENERATOR PRESSURE VALUES

1. Setpoint/Value Description: Pressure for highest steamline safety valve setpoint.

   Determined Setpoint/Value: 1120 psig

   Specific Instrument Usage: Steamline Pressure

   Guidelines: FR-H.2(1), F-0.3(3)

   References/Sources: 1. IPP System Description No. 18, "Main and Reheat Steam", pg. 5.

   Assumption(s):

   Calculation(s): Pressure for highest steamline safety valve setpoint = 1120 psig per Ref. 1.

SETPOINT DOCUMENTATION SHEET

0. STEAM GENERATOR PRESSURE VALUES

2. Setpoint/Value Description: Pressure for lowest steamline safety valve setpoint.

Determined Setpoint/Value: 1065 psig

Specific Instrument Usage: Steamline Pressure

Guidelines: FR-H.4(1), F-0.3(5)

References/Sources: 1. IPP System Description No. 18, "Main and Reheat Steam", Pg. 5.

Assumption(s):

Calculation(s): Pressure for lowest steamline safety valve setpoint = 1065 psig per Ref. 1.

SETPOINT DOCUMENTATION SHEET

0. STEAM GENERATOR PRESSURE VALUES

3. Setpoint/Value Description: Setpoint for SG PORV controller (typically 25 psig below lowest safety valve set pressure).

Determined Setpoint/Value: 1020 psig

Specific Instrument Usage: Steamline Pressure

Guidelines: E-3(3), ECA-0.0(3)

References/Sources:
1. PLS Document, P-1-13.
2. IPP System Decription No. 18, "Main and Reheat Steam", pg. 5.
3. IPP Abnormal Operating Instruction A-4-A, pg. 2.

Assumption(s):

Calculation(s): PORV controller setpoint = 1020 psig (Ref. 1 to 3).

SETPOINT DOCUMENTATION SHEET

0. STEAM GENERATOR PRESSURE VALUES

4. Setpoint/Value Description: Setpoint for SG PORV controller (typically 25 psig below lowest safety valve set pressure) minus 25 psi.

Determined Setpoint/Value: 995 psig

Specific Instrument Usage: Steamline Pressure

Guidelines: ES-3.1(11), ES-3.2(17), ES-3.3(17), ECA-3.1(27), ECA-3.2(21), ECA-3.3(21)

References/Sources: 1. Calculation for "Setpoint for SG PORV Controller", 03.

Assumption(s):

Calculation(s): PORV controller setpoint = 1020 psig (Ref. 1)
1020 psig -25 psig = 995 psig

SETPOINT DOCUMENTATION SHEET

0. STEAM GENERATOR PRESSURE VALUES

5. Setpoint/Value Description: Value corresponding to low steamline pressure for transition to ECA-3.1.

Determined Setpoint/Value: 400 psig

Specific Instrument Usage: Steamline Pressure

Guidelines: E-3(11)

References/Sources:
1. Calculation for "Temperatures corresponding to 20°F subcooling at the ruptured SG pressure", G1, G2.
2. Calculation for "Value corresponding to temperature T2", I2.

Assumption(s):

Calculation(s): RCS cooldown is limited by the F-0.4 RCS temperature limit.

Per Ref. 2, T_2 = 317°F

Minimum core exit temperature = T_2 + Core ΔT = 317°F + 30°F = 347°F

Per Ref. 1, Steamline pressure < 400 psig results in cooldown of core exit temperature to less than 348°F.

Use 400 psig

SETPOINT DOCUMENTATION SHEET

0. STEAM GENERATOR PRESSURE VALUES

6. Setpoint/Value Description: Value 25 psi above normal accumulator pressure.

Determined Setpoint/Value: 690 psig

Specific Instrument Usage: Steamline Pressure

Guidelines: ECA-1.1(11)

References/Sources:
1. PLS Document, P-7-5.
2. IPP Alarm Response Procedure SBF-1, pg. 4-20.

Assumption(s):
1. Use maximum possible accumulator pressure to maintain SG pressure above accumulator pressure.

Calculation(s): Accumulator pressure high alarm = 665 psig (Ref. 1 and 2)
665 psig + 25 psig = 690 psig

SETPOINT DOCUMENTATION SHEET

0. STEAM GENERATOR PRESSURE VALUES

7. Setpoint/Value Description: Value to prevent accumulator nitrogen injection, including allowances for including normal channel accuracy.

Determined Setpoint/Value: 170 psig

Specific Instrument Usage: Steamline Pressure

Guidelines: ECA-0.0(7), ECA-1.1(12), FR-C.1(8), FR-C.2(13)

References/Sources:
1. Technical Specifications, pg 3.3-1.
2. IPP Alarm Response Procedure SBF-1, pg. 4-20.
3. W provided
4. Background Document ECA-0.0, pg. 108.

Assumption(s):
1. Use maximum accumulator pressure and minimum water volume.
2. Assume $\gamma = 1.25$ per Ref. 4
3. Pressure drop between RCS and SG cancels out instrument uncertainty.

Calculation(s): Accumulator pressure high alarm = 665 psig (Ref. 2)

Accumulator water volume = 731 (maximum) (Ref. 1)

716 (minimum) (Ref. 1)

Total accumulator volume = 1100 ft^2

Nitrogen volume = 1100 -716 = 384 ft^3

PV^{γ} = constant γ = 1.25 per Ref. 4 (Ass. 2)

Before accumulator injection P_1 = 665 + 15 = 680 psia

V_1 = 384 ft^3

At the end of accumulator water injection

Nitrogen volume V_2 = 1100 ft^3

$$P_2V_2^{\gamma} = P_1V_1^{\gamma}$$

$$P_2\ (1100)^{1.25} = 680\ (384)^{1.25}$$

$$P_2 = 680\ \left(\frac{384}{1100}\right)^{1.25} = 182.5 \text{ psia} = 168 \text{ psig}$$

Per Assumption 3, the instrument uncertainty is cancelled out by the pressure drop between RCS and SG

Use 170 psig

SETPOINT DOCUMENTATION SHEET

0. STEAM GENERATOR PRESSURE VALUES

8. Setpoint/Value Description: Value to prevent accumulator nitrogen injection, including allowances for normal channel accuracy and margin for controllability. Refer to background document for guideline ECA-0.0, LOSS OF ALL AC POWER.

Determined Setpoint/Value: 220 psig

Specific Instrument Usage: Steamline Pressure

Guidelines: ECA-0.0(8)

References/Sources:
1. Background Document ECA - 0.0, Step 16
2. Calculation for "Pressure to prevent accumulator nitrogen injection", 07

Assumption(s):
1. Margin for controllability = 50 psig
2. Normal channel accuracy cancels out pressure drop from RCS to steamline.

Calculation(s): Value to prevent accumulator nitrogen injection = 170 psig (Ref. 2)
Margin for controllability = 50 psig (Ass. 1)
170 psig + 50 psig = 220 psig

SETPOINT DOCUMENTATION SHEET

0. STEAM GENERATOR PRESSURE VALUES

9. Setpoint/Value Description: Shutoff head pressure for condensate pumps.

Determined Setpoint/Value: 450 psig

Specific Instrument Usage: Steamline Pressure

Guidelines: FR-H.1(9)

References/Sources:
1. IPP System Description No 20, "Condensate System", pg. 5.
2. IPP Abnormal Operating Instruction A-3, pg. 3.
3. Meeting at IPP, 11/8/84.

Assumption(s):

Calculation(s):
1. Byron-Jackson pumps are rated at 7860 gpm, 1150 feet TDH (total developed head pressure, feet of water)
   Water density at 120°F = 61.7 lbm/ft^3

   $$\text{Shutoff pressure} = \frac{\rho g h}{gc} = 61.7\ lbm/ft^3\ \frac{1150 ft}{144\ in^2/ft^2}$$

   $$= 493\ psid$$
2. Per Ref. 2, shutoff pressure ~ 500 psig
3. Per Ref. 3, use 450 psig to insure pressure below condensate pumps shutoff head pressure.

SETPOINT DOCUMENTATION SHEET

P. NUCLEAR INSTRUMENTATION VALUES

1. Setpoint/Value Description: Value for intermediate range permissive to block source range high flux trip.

Determined Setpoint/Value: 10^{-10} amps

Specific Instrument Usage: Intermediate Range Flux

Guidelines: ES-0.1(10), ES-1.1(11), ES-1.2(20), E-3(30), ECA-0.1(12), ECA-2.1(21), ECA-3.1(24), ECA-3.2(18), ECA-3.3(12), FR-S.2(1)

References/Sources:
1. PLS Document, P-1-10.
2. IPP Abnormal Operating Instruction A-4-B-1, pg. 6.
3. IPP System Description, No. 28, "Overall Unit Protection System", pg. 39.

Assumption(s):

Calculation(s): Intermediate range permissive to block source range high flux trip = 10^{-10} amps (Ref. 1 to 3)

SETPOINT DOCUMENTATION SHEET

Q. BORATION VALUES

1. Setpoint/Value Description: Boration requirement (stuck rod(s), i.e., how much RCS boration in ppm is necessary for each stuck rod using highest worth rod as basis for value).

Determined Setpoint/Value: 150 ppm/rod

Specific Instrument Usage:

Guidelines: ES-0.1(5)

References/Sources: 1. W provided.

Assumption(s):

Calculation(s): Per Ref. 1, the highest stuck rod worths (ppm) are

	BOL	EOL
Cycle 4	124	136
Cycle 5	108	123
Cycle 6	116	84
Cycle 7	84	~80

Bounding value for all cycles = 150 ppm/rod

R. RCS SUBCOOLING VALUES

1. Setpoint/Value Description: The sum of temperature and pressure measurement system errors, including allowances for normal channel accuracies, translated into temperature using saturation tables. (also plus 10°F, 20°F and 50°F)

Determined Setpoint/Value: See Table 1a and Table 1b

Specific Instrument Usage: Wide Range RTD
RCS Wide Range Pressure

Guidelines: E-0(14), ES-0.1(11), ES-0.3(3), ES-0.4(9), E-1(8), ES-1.1(1), ES-1.2(9), ES-1.2(18), ES-1.4(1), E-3(15), E-3(21), ES-3.1(1), ES-3.2(1), ES-3.3(1), ECA-0.0(15), ECA-0.1(2), ECA-2.1(13), ECA-3.1(10), ECA-3.2(9), ECA-3.3(9), ECA-3.1(22), ECA-3.3(15), FR-P.1(6), FR-P.1(10), FR-P.1(12), FR-I.3(12), FR-I.3(14), F-0.2 (1)

References/Sources: 1. Instrument Uncertainty, W provided

Assumption(s):

Calculation(s): The sum of temperature and pressure measurement system errors as tabulated in Table 1 and 2 is provided in Ref. 1. Table 1a presents the subcooling uncertainty vs range of RCS pressure. Table 1b summarizes the results of subcooling uncertainty plus 10°F, 20°F, and 50°F

Calculation(s) Contd.: Subcooling errors on Tables 1a and 1b are applied to all the sections of EOP except FR-P.1 due to the small operating margin at low pressure as shown on Figure FRP1-3. RCS hot leg temperatures corresponding to 50°F, 10°F and 0°F below minimum subcooling were utilized as criteria for SI termination, depressurization, and SI reinitiation respectively. Tables 3 and 4 summarizes the results for normal and adverse conditions.

Table 1

RCS RTD and Pressure Measurement System

Error Using Saturation Tables

RCS Pressure (psig)	RCS Subcooling (°F) normal	RCS Subcooling (°F) adverse
0	25.2	25.2
85	119.0	119.0
185	53.8	172.2
285	40.7	207.4
385	35.30	253.14
485	32.46	135.09
585	30.75	103.88
685	29.62	86.94
785	28.83	75.98
885	28.25	68.22
985	27.82	62.40
1085	27.47	57.88
1185	27.20	54.24
1285	26.98	51.27
1385	26.79	48.78
1485	26.64	46.67
1585	26.51	44.86
1685	26.40	43.29
1785	26.30	41.92
1885	26.21	40.70
1985	26.14	39.62
2085	26.07	38.65
2185	26.01	37.78
2285	25.95	36.99
2385	25.91	36.27
2485	25.86	35.61

Table 1a Subcooling Uncertainty

RCS Pressure (psig)	RCS Subcooling (°F) Normal Containment	RCS Subcooling (°F) Adverse Containment
0 - 200	120	180
200 - 500	50	250
500 - 1000	33	136
1000 - 2500	30	62

Table 1b

Subcooling Uncertainty Plus 10°F

RCS Pressure (psig)	RCS Subcooling (°F) Normal Containment	RCS Subcooling (°F) Adverse Containment
0 - 200	130	190
200 - 500	60	260
500 - 1000	43	146
1000 - 2500	40	72

Subcooling Uncertainty Plus 20°F

RCS Pressure (psig)	RCS Subcooling (°F) Normal Containment	RCS Subcooling (°F) Adverse Containment
0 - 200	140	200
200 - 500	70	270
500 - 1000	53	156
1000 - 2000	50	82

Subcooling Uncertainty Plus 50°F

RCS Pressure (psig)	RCS Subcooling (°F) Normal Containment	RCS Subcooling (°F) Adverse Containment
0 - 200	170	230
200 - 500	100	300
500 - 1000	83	186
1000 - 2000	80	112

Table 2

RCS Temperature and Pressure Measurement System

Error Using Subcooling Monitor

PCS Pressure (psig)	RCS Subcooling (°F) normal	adverse
385	28.19	190.89
485	26.40	120.23
585	25.32	94.15
685	24.62	79.29
785	24.12	69.45
885	23.76	62.39
985	23.49	57.05
1085	23.28	52.87
1185	23.11	49.50
1285	22.98	46.72
1385	22.87	44.39
1485	22.77	42.41
1585	22.69	40.70
1685	22.62	39.22
1785	22.56	37.91
1885	22.51	36.76
1985	22.47	35.73
2085	22.43	34.81
2185	22.39	33.97
2285	22.36	33.22
2385	22.33	32.53
2485	22.30	31.89

Table 3 Normal Containment

RCS Pressure (psig)	T_{sat} - Accuracy (°F)	T_{sat} - Accuracy -10°F	T_{sat} - Accuracy -50°F
0	187	177	137
85	209	199	159
185	210	200	160
285	210	200	160
385	210	200	160
485	332	322	282
585	382	372	332
685	416	406	366
785	442	432	392
885	464	454	414
985	482	472	432
1085	498	488	448
1185	513	503	463
1285	526	516	476
1385	538	528	488
1485	550	540	500
1585	560	550	510
1685	570	560	520
1785	579	569	529
1885	588	578	538
1985	596	586	546
2085	604	594	554
2185	612	602	562
2285	619	609	569
2385	626	616	576
2485	633	623	583

Table 4 Adverse Containment

RCS Pressure (psig)	T_{sat} - Accuracy (°F)	T_{sat} - Accuracy -10°F	T_{sat} - Accuracy -50°F
0	187	177	137
85	209	199	159
185	328	318	278
285	377	367	327
385	409	399	359
485	435	425	385
585	455	445	405
685	473	463	423
785	489	479	439
885	504	494	454
985	517	507	467
1085	529	519	479
1185	540	530	490
1285	550	540	500
1385	560	550	510
1485	570	560	520
1585	578	568	528
1685	587	577	537
1785	595	585	545
1885	602	592	552
1985	610	600	560
2085	617	607	567
2185	624	614	574
2285	630	620	580
2385	636	626	586
2485	642	632	492

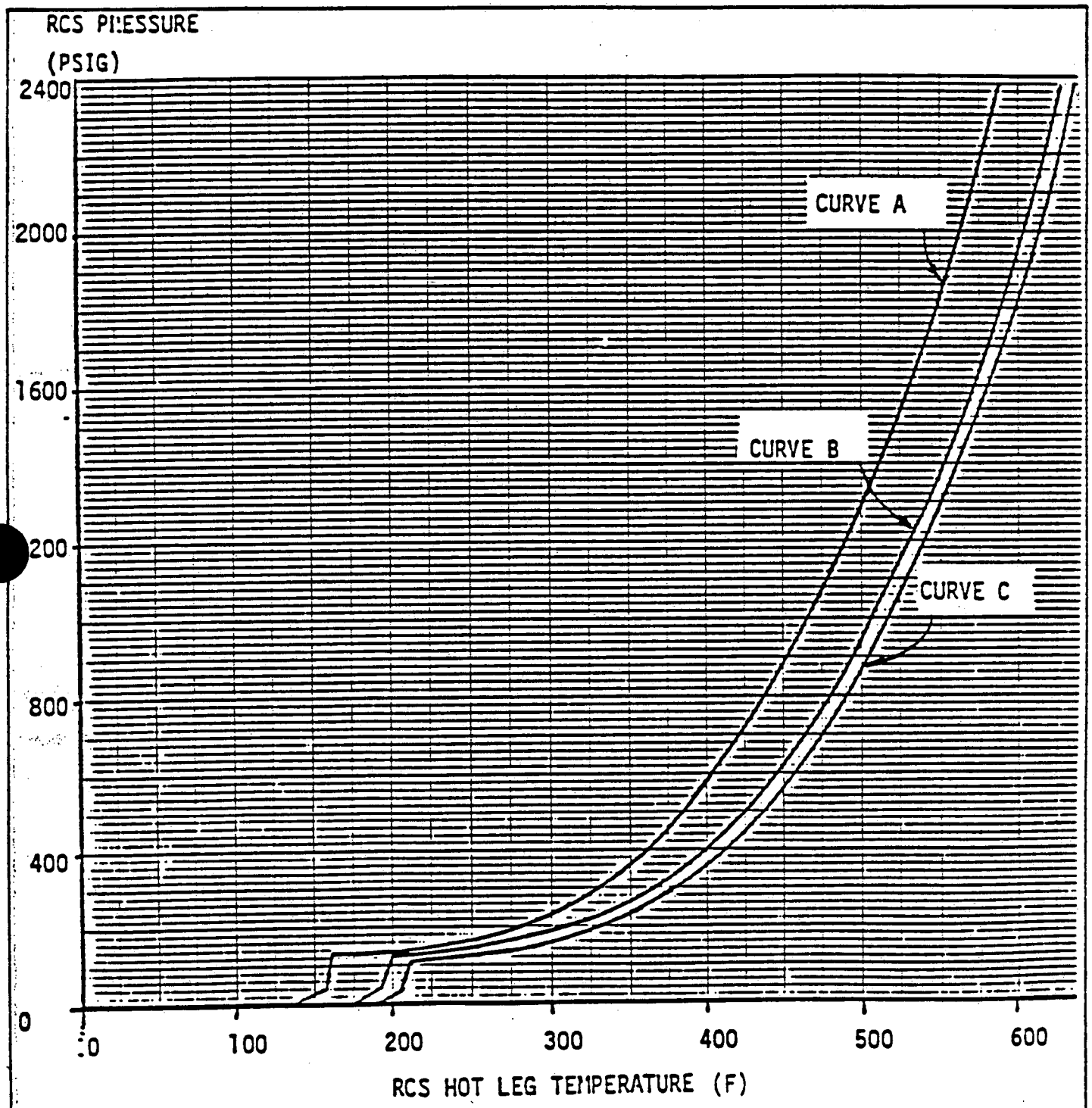

FIGURE FRP1-1, RCS PRESSURE vs. TEMPERATURE (NORMAL CONTAINMENT)

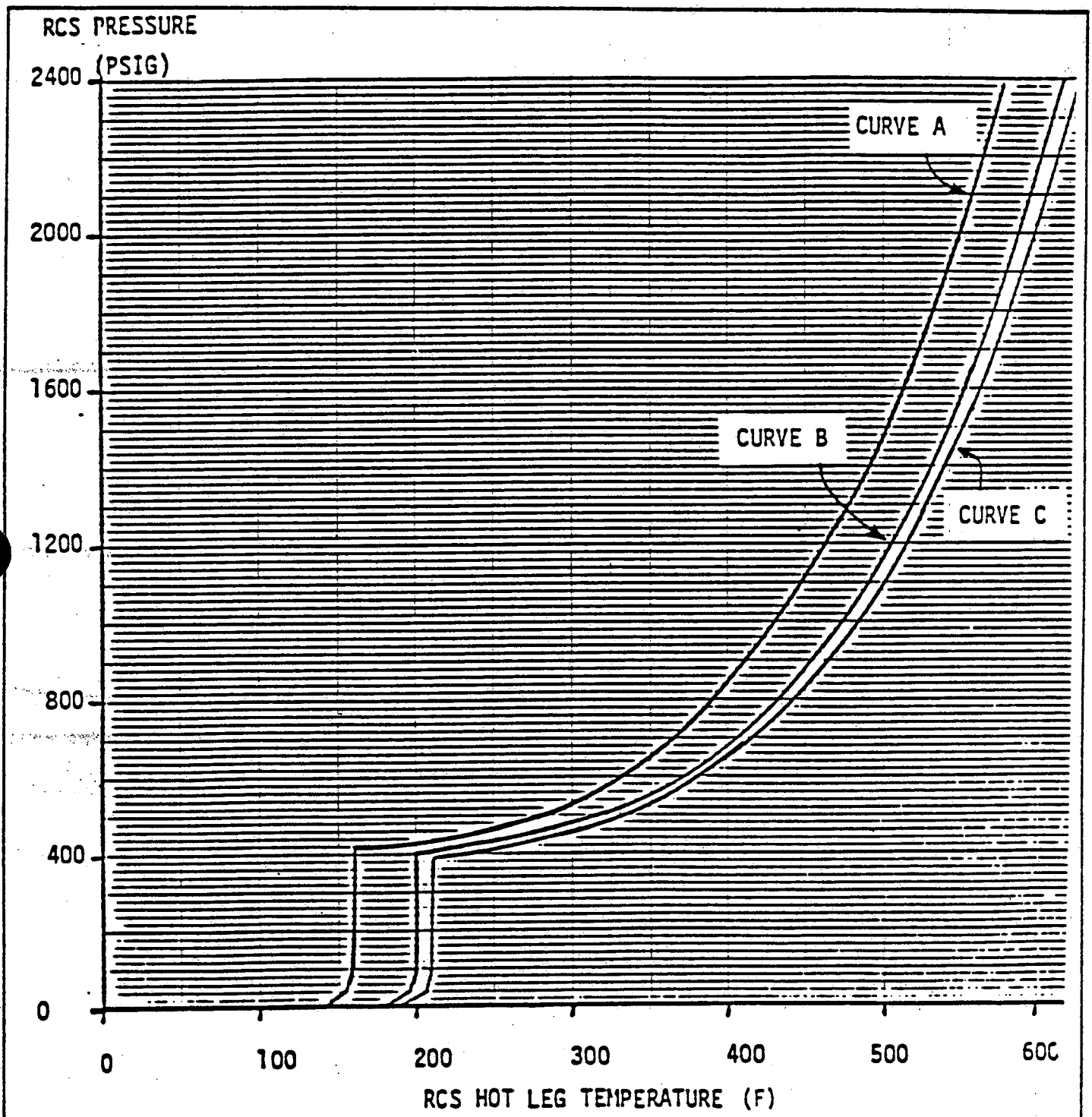

FIGURE FRP1-2, RCS PRESSURE vs. TEMPERATURE (ADVERSE CONTAINMENT)

R. RCS SUBCOOLING VALUES

2. Setpoint/Value Description: The sum of temperature and pressure measurement system errors, including allowances for normal channel accuracies and post accident transmitter errors, translated into temperature using saturation tables. (also plus 10°F, 20°F, and 50°F)

Determined Setpoint/Value: See Table 1a and Table 1b of Ref. 1.

Specific Instrument Usage: Wide Range RTD
RCS Wide Range Pressure

Guidelines: ES-0.4(10), E-1(9), ES-1.1(2), ES-1.2(10), ES-1.2(19), ES-1.4(2), E-3(16), E-3(22), ES-3.1(2), ES-3.2(2), ES-3.3(2), ECA-0.0(16), ECA-0.1(3), ECA-2.1(14), ECA-3.1(11), ECA-3.2(10), ECA-3.3(10), ECA-3.1(23), ECA-3.3(16), FR-P.1(7), FR-P.1(11), FR-P.1(13), FR-I.3(13), FR-I.3(15), F-0.2(1)

References/Sources: 1. Calculation for "Temperature and pressure system errors with normal errors", R1.

Assumption(s):

Calculation(s): The subcooling errors are summarized in Table 1a of Ref. 1. Subcooling uncertainty plus 10°F, 20°F, and 50°F are presented in Table 1b of Ref. 1.

R. RCS SUBCOOLING VALUES

3. Setpoint/Value Description: Minimum subcooling requirement or contingency action as determined in background document for ES-0.2, NATURAL CIRCULATION COOLDOWN, (to prevent void growth).

Determined Setpoint/Value: See Table 1

Specific Instrument Usage: RCS Wide Range Pressure
RCS Wide Range RTD

Guidelines: ES-0.2(9)

References/Sources:
1. Background Document, ES-0.2, Appendix A.
2. Calculation for "Pressure at which SI unblocks", A7.
3. Instrument uncertainty, W provided
4. ASME Steam Tables.

Assumption(s):

Calculation(s): Per Ref. 1, Indian Point Unit 2 is a top hat T_{hot} plant. Must use the following contingency actions
(i) Maintain RCS pressure approximately 50 psi below pressure at which SI unblocks, 1890 psig (Ref. 2), until RCS temperature is cooled down to 400°F.
P_{sat} (1890 psig) -200°F -27°F
= 629°F -200°F -27°F = 402°F (Ref. 3 and 4)
Use 400°F

Calculation(s) Contd.: (ii) For RCS temperature < 400°F

Continue the cooldown and initiate a depressurization of the RCS while maintaining a minimum of 200°F subcooling (or the Tech. Spec. cooldown limit) until RCS pressure is 1200 psig.

(iii) Cool down the RCS to below 350°F while maintaining 1200 psig.

(iv) Wait 8 hours (top hat plant) to allow the upper head to cool off to a temperature less than saturation at 400 psig before continuing with the depressurization.

See Figure ES02-2 for the acceptable operating region.

Table 1

Cooldown Limits to Avoid Upper Head Void Formation

Without CRDM Fans, Guideline ES-0.2, Step 12

RCS Pressure (psig)	T_{sat} (°F)	Nominal Subcooling (°F)	Subcooling Monitor	Requirment (°F) Steam Table	T_{sat} - Subcooling Requirement (°F)
2485	668	50	73	76	592
2385	662	50	73	76	586
2285	656	50	73	76	580
2185	650	50	73	77	573
2085	643	50	73	77	566
1985	636	50	73	77	559
1890	629	50	73	77	552
Increase Subcooling at 1890 psig					
1785	621	200	223	227	394
1685	613	200	223	227	386
1585	605	200	223	227	378
1485	596	200	223	227	369
1385	587	200	223	227	360
1285	577	200	223	227	350
1200	567	200	224	228	340
Wait 8 hours for upper head to cool below 400°F before continuing depressurization					
1085	556	200	224	228	328
985	545	200	224	228	317
885	532	200	224	229	303
785	518	200	225	229	289
685	503	200	225	230	273
585	486	200	226	231	255
485	467	200	227	233	234
400	448	200	229	236	212

FIGURE ES02-2

1. Maintain RCS pressure approximately 1890 psig until RCS temperature is cooled down to 400F.

2. Continue the cooldown and initiate a depressurization of the RCS while maintaining a minimum of 200F subcooling (or the Technical Specification limit) until RCS pressure is 1200 psig.

3. Cooldown the RCS to below 350F while maintaining 1200 psig.

4. Wait eight (8) hours to allow the upper head to cool before continuing depressurization.

5. See Figure below for the acceptable operating region.

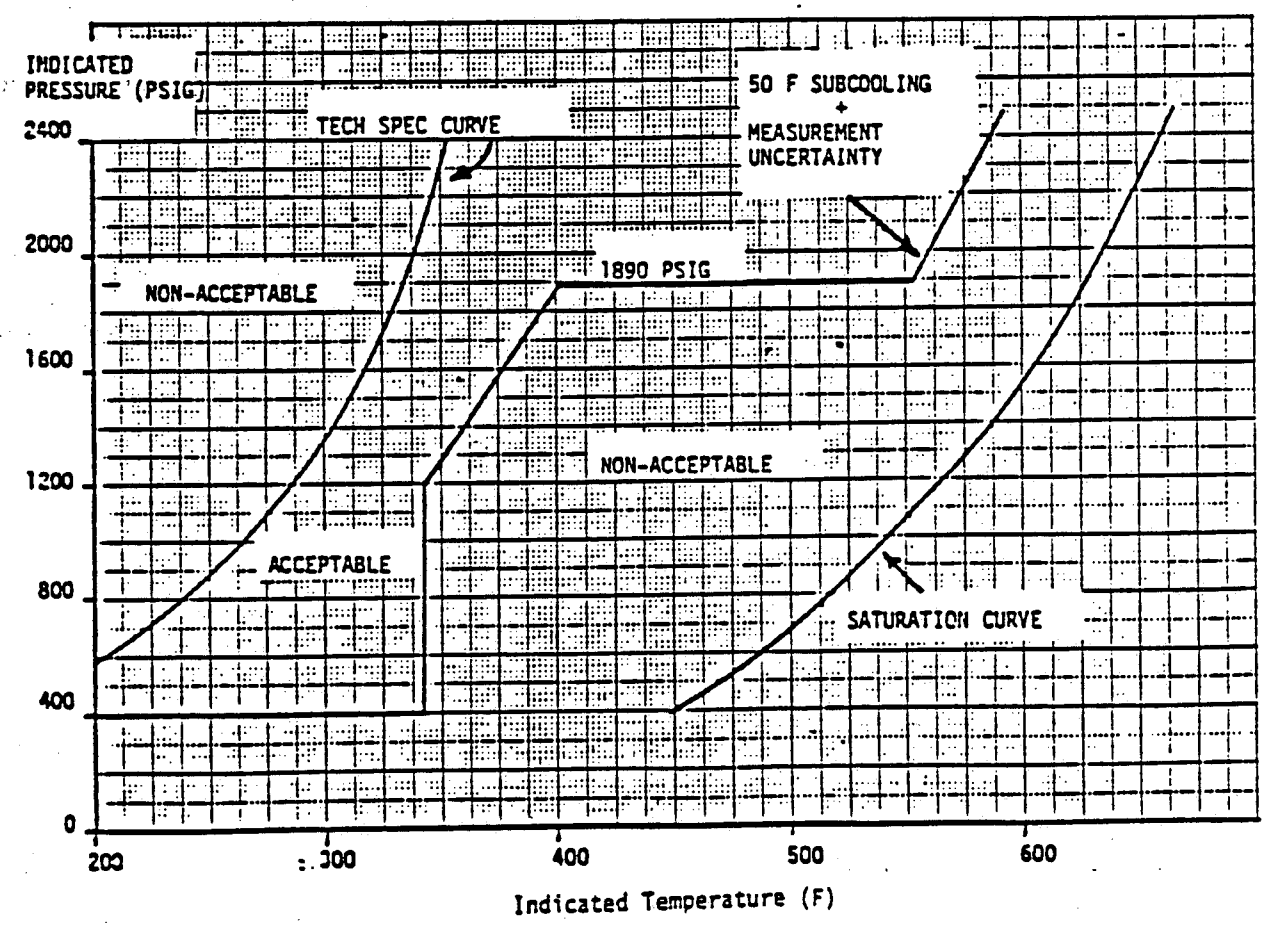

MP002

R. RCS SUBCOOLING VALUES

4. Setpoint/Value Description: Minimum subcooling requirement as determined in background document for ES-0.2, NATURAL CIRCULATION COOLDOWN, (to prevent void growth).

Determined Setpoint/Value: See Table 1b of Ref. 2.

Specific Instrument Usage: RCS Wide Range Pressure
RCS Wide Range RTD

Guidelines: ES-0.2(10)

References/Sources:
1. Background Document ES-0.2, Step 12
2. Calculation for "Sum of pressure and temperature errors plus normal accuracy", R1.

Assumption(s):

Calculation(s): Per Ref. 1, the minimum subcooling requirement is 50°F plus normal subcooling uncertainty. See Table 1b in Ref. 2.

R. RCS SUBCOOLING VALUES

5. Setpoint/Value Description: Minimum subcooling requirement to accommodate upper head void collapse. Refer to document RCP TRIP/RESTART in Generic Issues section of Executive Volume

Determined Setpoint/Value: See Table 1

Specific Instrument Usage: Wide Range RTD
RCS Wide Range Pressure

Guidelines: ES-0.3(2), ES-0.4(2), E-3(28), FR-I.3(9)

References/Sources:
1. RCP TRIP/RESTART in Generic Issues section of ERG Executive Volume, pg. 50.
2. "Pressurizer level to accommodate upper head void collapse" calculation, D10.
3. "Sum of pressure and temperature errors with normal accuracy" calcualtion, R1.

Assumption(s):

Calculation(s): Per Ref. 2, Indian Point Unit 2 is a 4 loop plant with top hat upper support plate, the minimum subcooling requirement to accommodate upper head void collapse is 22°F plus normal subcooling uncertainty (Ref. 1). Subcooling uncertainty is calculated and summarized in Table 1a of Ref. 3.
Table 1 presents the subcooling requirement vs range of RCS pressure.

Table 1

Subcooling Requirement to Accommodate Upper Head Void Collapse

RCS Pressure (psig)	RCS Subcooling (°F) Normal Containment	RCS Subcooling (°F) Adverse Containment
0 - 200	142	202
200 - 500	72	272
500 - 1000	55	158
1000 - 2500	52	84

SETPOINT DOCUMENTATION SHEET

R. RCS SUBCOOLING VALUES

6. Setpoint/Value Description: RCS subcooling necessary to accommodate upper head void collapse including allowances for post accident transmitter errors. Refer to document RCP TRIP/RESTART in Generic Issues section of Executive Volume.

Determined Setpoint/Value: See Table 1 of Ref. 1.

Specific Instrument Usage: RCS Wide Range Pressure
RCS Wide Range RTD

Guidelines: E-3(29), FR-I.3(10)

References/Sources:
1. Calculation for "Minimum subcooling requirement to accommodate upper head void collapse", R5.
2. Calculation for "Sum of pressure and temperature errors with adverse uncertainty", R2.

Assumption(s):

Calculation(s): Per Ref. 1, minimum subcooling requirement to accommodate upper head void collapse including adverse uncertainty is 22°F plus adverse subcooling uncertainty in Ref. 2. The results are presented in Table 1 of Ref. 1.

R. RCS SUBCOOLING VALUES

7. Setpoint/Value Description: Subcooling criteria (for stopping SI pumps in ES-1.2, ECA-3.1, ECA-3.2 and FR-H.1). Refer to document SI REDUCTION SEQUENCE EVALUATION in Generic Issues section of Executive Volume.

Determined Setpoint/Value: See Tables 1 and 2

Specific Instrument Usage: RCS Wide Range Pressure
Wide Range RTD

Guidelines: ES-1.2(13), ECA-3.1(17), ECA-3.2(13), FR-H.1(11)

References/Sources:
1. "SI REDUCTION SEQUENCE EVALUATION" in Generic Issues of Executive Volume.
2. W provided.
3. Instrument Uncertainty, W provided
4. IPP System Description No. 3, "Chemical and Volume Control System", pg. 33, pg. 39.
5. W provided.
6. W provided.

Assumption(s):

Calculation(s):

A. Inputs for REDUCE code

The REDUCE code was used to generate the subcooling criteria for stopping SI pumps. (Ref. 1) The IPP plant specific inputs are summarized as follows:

1. Flow capacity of High Head SI pumps (see Table A1).
   Flow capacity of one, two, and three HHSI are obtained from Ref. 2.
   WECCS (,1) = flow capacity of one HHSI
   WECCS (,2) = flow capacity of two HHSI
   WECCS (,3) = flow capacity of three HHSI.
   Only two HHSI pumps are allowed in the flow capacity input. To simulate pump configuration with 3 HHSI pumps, use NCHGSI = 1, NHHSI = 0, and input the flow capacity of three HHSI pumps in WECCS (,3).

2. Flow capacity of charging pumps.
   Maximum leak-off flow = 12 gpm (Ref. 6).
   Flow capacity of one charging pump = 98 gpm -12 gpm = 86 gpm
   = 86 gpm x 0.139 (lbm/sec)/(gpm) = 12.0 lb/sec
   Use .139 (lbm/sec)/(gpm) conversion factor obtained from Ref. 2.
   WCHGP (,1) = 12.0
   WCHGP (,2) = (98 x 2 -12) x 0.139 = 25.6
   WCHGP (,3) = (98 x 3 -12) x 0.139 = 39.2

3. Method of incorporating instrument uncertainties.
   MODESUB = 2 for subcooled recovery schemes
   MODESUB = 3 for saturated recovery schemes

4. Uncertainty in measured RCS pressure
   PUNC = 90 - normal uncertainty = (3000 psi) (.03) = 90 psi (Ref. 3)
   PUNC = 390 - adverse uncertainty = (3000 psi) (.13) = 390 psi (Ref. 3)

5. Uncertainty in measured coolant temperature
   TUNC = 25.2 - normal uncertainty = (700°F)(.036) = 25.2°F
   TUNC = 25.2 - adverse uncertainty = (700°F)(.036) = 25.2°F

6. Nominal reactor coolant system volume including pressurizer.
   VRCS = 12,000 From Ref. 5

7. RCS Conditions and initial pump configuration.

Case No	Loop Flow	Fluid State	Containment Conditions
1	Forced	Sub.	Normal
2	Natural Circ.	Sub.	Normal
3	Force	Sub.	Adverse
4	Natural Circ.	Sub.	Adverse
5	-	Sat.	Normal
6	-	Sat.	Adverse

Table A1 Flow Capacity of High Head SI Pumps

RCS Pressure (psig)	3 HHSI* (gpm)	3 HHSI (lb/sec)	2 HHSI (lb/sec)	1 HHSI (lb/sec)
0	1620	225.2	175.02	87.51
100	1560	216.8	168.57	84.29
200	1480	205.7	161.99	81.00
300	1430	198.8	155.23	77.62
400	1360	189.0	148.26	74.13
500	1290	179.3	141.01	70.51
600	1230	171.0	133.42	66.71
700	1140	158.5	125.38	62.69
800	1060	147.3	116.78	58.39
900	980	136.2	107.42	53.71
1000	890	123.7	97.04	48.52
1100	800	111.2	85.20	42.60
1200	680	94.5	71.10	35.55
1300	540	75.1	53.12	26.56
1400	310	43.1	27.87	13.94
1500	0	0.0	0.0	0.0

* For 3 HHSI pumps the flow capacities in Ref. 2 is in gpm. Use the conversion factor obtained from Table 2 of Ref. 2.

1259.11 gpm = 175.02 lb/sec

$$1 \text{ gpm} = \frac{1}{7.194} \text{ lb/sec} = 0.139 \text{ lb/sec}$$

8. Generic Input

Input Parameter	Case Number No. 1	No. 2	No. 3	No. 4	No. 5	No. 6
CZAL1	1.018	1.018	1.018	1.018	0.95	0.95
CZAL2	0.90	0.90	0.90	0.90	1.0	1.0
DTDT	.02778	.02778	.02778	.02778	.02778	.02778
MODEBRK	2	2	2	2	2	2
MODESUB	2	2	2	2	3	3
TCORE	2	30.0	2	30.0	0	0
TSUB	30.0	30.0	30.0	30.0	0	0
PUNC	90.0	90.0	390.0	390.0	90.0	390.0
TUNC	25.2	25.2	25.2	25.2	25.2	25.2

Input change for case 2

TCORE = 30

Input change for case 3

PUNC = 390

TCORE = 2.0

Input change for case 4

TCORE = 30

Input change for case 5

CZAL1 = 0.95

CZAL2 = 1.0

MODESUB = 3

PUNC = 90

TSUB = 0.0

Input change for case 6

PUNC = 390

B. SI Reduction Criteria

Reduction sequences for IPP are summarized as follows:

Sequence No.	SI Pump Configuration					
	PC_n	PC_{n-1}	PC_{n-2}	PC_{n-3}	PC_{n-4}	PC_{n-5}
1	(0,3,0)	(0,2,0)	(0,1,0)			
2	(0,3,0)	(0,2,1)	(0,2,0)	(0,1,1)	(0,1,0)	(0,0,1)
3	(0,3,1)	(0,2,1)	(0,1,1)	(0,0,1)		

(I, J, K) - I = number of charging SI injecting
J = number of high head SI injecting
K = 1 - charging flow established
0 - no charging flow

Sequences 1 and 3 require no control of charging flow. These two sequences were performed with reduce verison: REDUCE, ID = PPECV, MF = MFB

Job # for sequence 1 AJBKOMQ

Job # for sequence 3 AJBKOTB

The results are presented in Tables 1 and 2.

SI reduction criteria for sequence 2 were also generated, but decided not to implement in the EOP.

Table 1

SI Reduction Criteria for T_{HL} > 330°F

ES-1.2, ECA-3.1, FR-H.1

	RCS Subcooling (°F)					
	Normal Containment			Adverse Containment		
No. of Charging Pumps	One SI Pump Running	Two SI Pumps Running	Three SI Pumps Running	One SI Pump Running	Two SI Pumps Running	Three SI Pumps Running
0	-	145	85	-	215	170
1	265	135	85	265	210	170
2	245	130	85	260	205	170
3	220	120	85	250	200	170

Table 2

SI Reduction Criteria for T_{HL} > 330°F

ECA-3.2

	RCS Subcooling (°F)					
	Normal Containment			Adverse Containment		
No. of Charging Pumps	One SI Pump Running	Two SI Pumps Running	Three SI Pumps Running	One SI Pump Running	Two SI Pumps Running	Three SI Pumps Running
0	-	70	60	-	145	140
1	265	70	60	265	145	140
2	155	70	60	195	145	140
3	105	70	60	170	145	140

SETPOINT DOCUMENTATION SHEET

S. FLOW VALUES

1. Setpoint/Value Description: Minimum indicated charging flow.

Determined Setpoint/Value: 32 gpm

Specific Instrument Usage: Charging Flow Rate

Guidelines: ECA-0.1(1), FR-P.1(9), FR-I.1(1), FR-I.2(1), FR-I.3 (1)

References/Sources:
1. Meeting at IPP, 11/8/84.
2. IPP EOP validation program, comment number 18

Assumption(s):

Calculation(s): Per Ref. 1, minimum charging flowrate for cooling the regenerative heat exchanger = 15 gpm
Minimum readable flow = 25 gpm
Per Ref. 2, minimum charging flow rate is 32 gpm since charging pump speed controller will not allow less than this value if seals are isolated.
Use 32 gpm

S. FLOW VALUES

2. Setpoint/Value Description: The minimum safeguards AFW flow requirement for heat removal plus allowances for normal channel accuracy (typically one MD AFW pump capacity at SG design pressure).

Determined Setpoint/Value: 420 gpm

Specific Instrument Usage: AFW Flow Rate

Guidelines: E-0(6), ES-0.1(2), ES-0.4(15), E-1(6), ES-1.1(10), ES-1.2(7), ES-1.4(3), E-3(8), ES-3.1(8), ES-3.2(8), ES-3.3(8), ECA-0(2), ECA-0.1(11), ECA-0.2(7), ECA-2.1(1), ECA-3.1(8), ECA-3.2(7), ECA-3.3(6), FR-C.1(7), FR-H.1(1), FR-P.1(1), FR-P.2(1), F-0.3(2)

References/Sources:
1. W provided
2. Instrument Uncertainty, W provided

Assumption(s):

Calculation(s): The minimum safeguards AFW flow requirement is 300 gpm for the first 10 minutes and 400 gpm thereafter per Ref. 1.
Use 400 gpm.
Normal channel accuracy = (.0363) (450 gpm) = 16.3 gpm (Ref. 2)
400 gpm + 16.3 gpm = 416.3 gpm, use 420 gpm.

SETPOINT DOCUMENTATION SHEET

S. FLOW VALUES

3. Setpoint/Value Description: The minimum RHR pump flow which indicates injection into the RCS.

Determined Setpoint/Value: 200 gpm

Specific Instrument Usage: RHR Flowrate for cold leg injection

Guidelines: E-1(17)

References/Sources: 1. Meeting at IPP, 11/9/84.

Assumption(s):

Calculation(s): Per Ref. 1, minimum readable flow = 200 gpm for any cold leg.

SETPOINT DOCUMENTATION SHEET

S. FLOW VALUES

4. Setpoint/Value Description: Minimum SI pump flow to remove decay heat curve. See background document for ECA-1.1, LOSS OF EMERGENCY COOLANT RECIRCULATION.

Determined Setpoint/Value: See Table 1

Specific Instrument Usage: High Head SI Flow Rate

Guidelines: ECA-1.1 (Fig. ECA11-1)

References/Sources: 1. Background Document ECA-1.1, Step 11.
2. W provided.

Assumption(s):

Calculation(s): Core power = 2758 Mwt (Ref. 2)
Per Ref. 1, modify Y coordinate of Figure 1 to
(Flow Rate $\frac{gpm}{MWt}$) (2758 MWt)

The results are presented in Table 1.

Figure 1. Decay heat flow rate per MWt plant rating versus time after trip

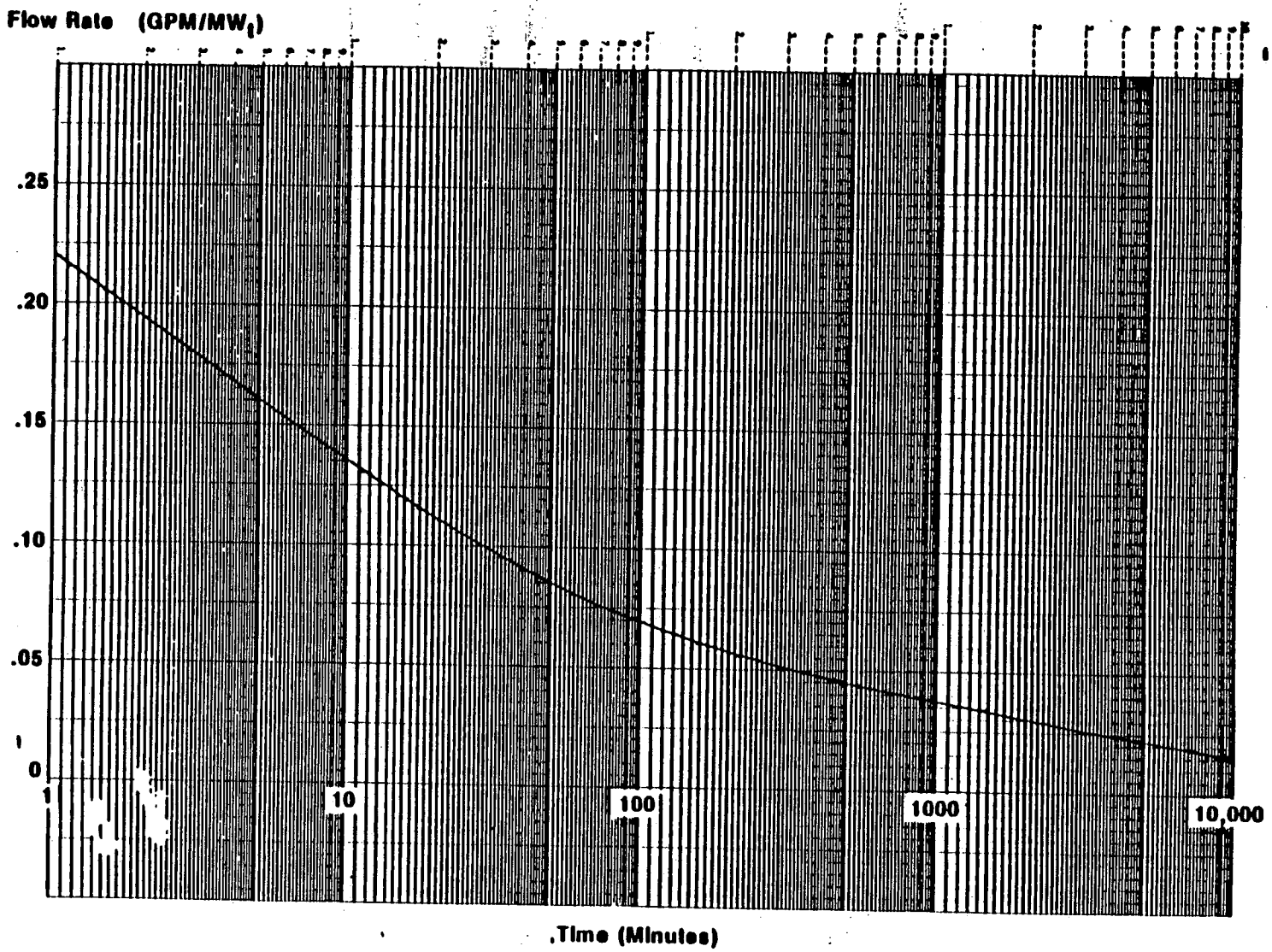

Table 1

Minimum SI Flow To Remove Decay Heat

Time (minutes)	Flow Rate (GPM)
1	607
2	538
3	497
4	468
5	444
6	424
7	408
8	394
9	386
10	374
15	336
20	309
30	276
40	251
50	234
60	222
70	212
80	204
90	198
100	193
150	171
200	158
300	142
400	131
500	124
600	118
800	110
1000	103
2000	83
3000	73
4000	68
5000	62
10000	42

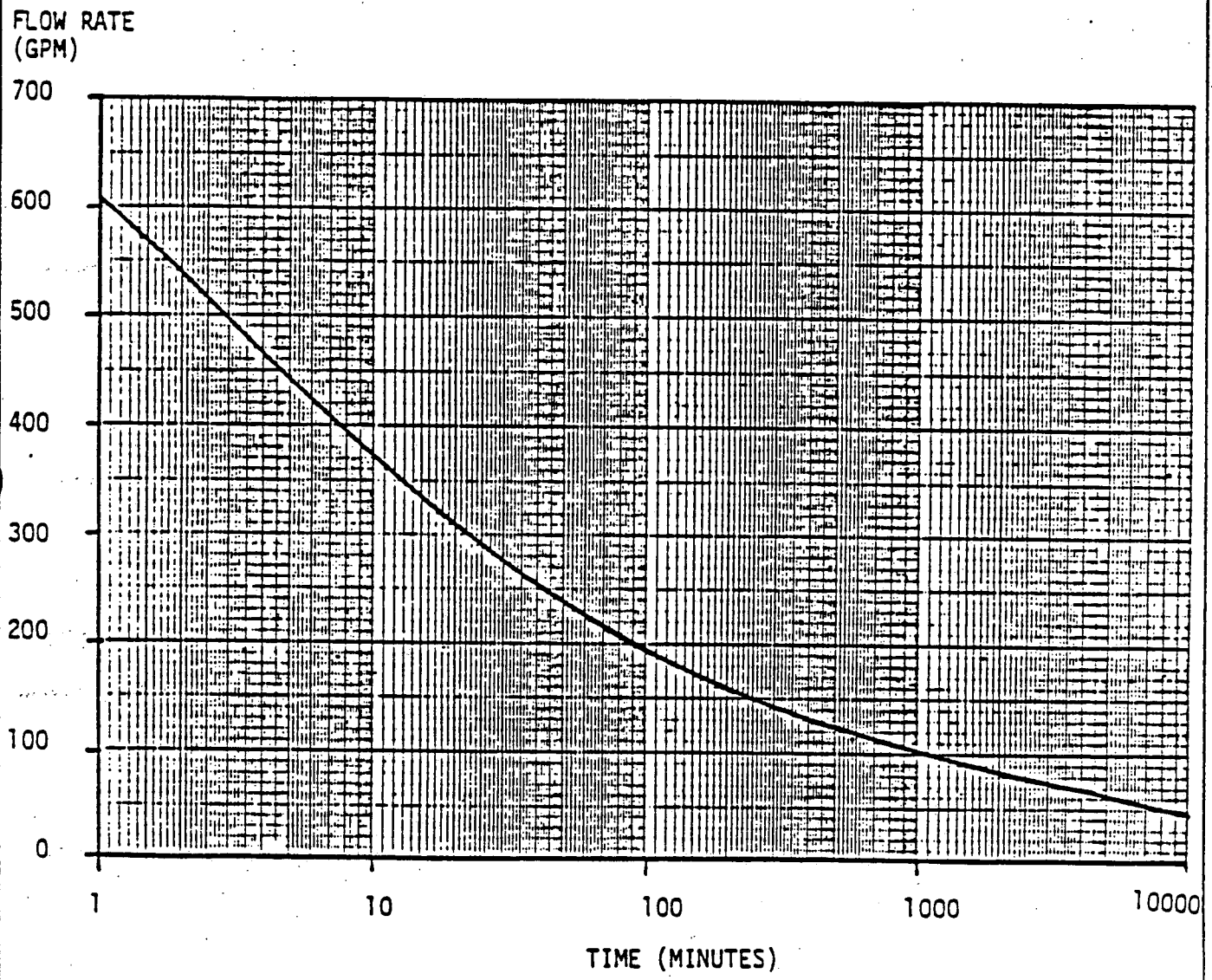

FIGURE ECA11-1, MINIMUM SI FLOW RATE VERSUS TIME AFTER TRIP

SETPOINT DOCUMENTATION SHEET

S. FLOW VALUES

5. Setpoint/Value Description: Value of feed flow in plant specific units corresponding to 25 gpm. Refer to guideline ECA-2.1, UNCONTROLLED DEPRESSURIZATION OF ALL STEAM GENERATORS.

Determined Setpoint/Value: 25 gpm

Specific Instrument Usage: Total Feedwater Flow Rate

Guidelines: ECA-2.1(2), FR-H.5(3), FR-P.1(4), FR-P.2(4)

References/Sources:
1. Background Document ECA-2.1, step 2.
2. Instrument Uncertainty, W provided.

Assumption(s):

Calculation(s): Minimum readable flow = 25 gpm per Ref. 1
Normal channel accuracy = (.0363) (450 gpm) = 16.3 gpm (Ref. 2).
Use 25 gpm to ensure feed flow into steam generator per discussion with IPP personnel.

S. FLOW VALUES

6. Setpoint/Value Description: Value corresponding to discharge flow of two MD AFW pumps at SG design pressure.

Determined Setpoint/Value: 800 gpm

Specific Instrument Usage: AFW Flow Rate

Guidelines: FR-S.1(3)

References/Sources: 1. IPP System Description, No. 21, "Feedwater System", pg. 64.

Assumption(s):

Calculation(s): Discharge flow of one MD AFW pump = 400 gpm (Ref. 1)
400 gpm x 2 = 800 gpm

SETPOINT DOCUMENTATION SHEET

T. CONTAINMENT VALUES

1. Setpoint/Value Description: Containment high-2 pressure setpoint.

Determined Setpoint/Value: 28 psig

Specific Instrument Usage: Containment Pressure

Guidelines: F-0.5(2)

References/Sources:
1. Technical Specifications, Table 3-1.
2. PLS Document, P-7-6.
3. IPP System Description, No. 28, "Overall Unit Protection System", pg. 38.
4. IPP Abnormal Operating Instruction A-4-B-2, pg. 4.

Assumption(s):

Calculation(s): High - 2 setpoint = 28.0 psig (Ref. 2, 3 and 4)
= 30 psig (Ref. 1)
Use 28 psig per consultation with IPP personnel.

SETPOINT DOCUMENTATION SHEET

T. CONTAINMENT VALUES

2. Setpoint/Value Description: Containment pressure setpoint for spray actuation.

Determined Setpoint/Value: 28 psig

Specific Instrument Usage: Containment Pressure

Guidelines: E-0(1), ECA-0.0(11), FR-Z.1(1)

References/Sources:
1. Technical Specifications, Table 3-1.
2. PLS Document, P-7-6.
3. IPP System Description, No 28, "Overall Unit Protection System", pg. 28.
4. IPP Abnormal Operating Instruction A-4-B-2, pg. 4.

Assumption(s):

Calculation(s): Containment pressure setpoint for spray = 30 psig (Ref. 1)
= 28 psig (Ref. 2, 3, and 4)

Use 28 psig.

T. CONTAINMENT VALUES

3. Setpoint/Value Description: Value corresponding to containment design pressure.

Determined Setpoint/Value: 47 psig

Specific Instrument Usage: Containment Pressure

Guidelines: ES-0.4(17), ES-1.4(13), ES-3.3(24), ECA-1.1(4), ECA-2.1(28), ECA-3.1(36), ECA-3.2(30), ECA-3.3(26), F-0.5(1)

References/Sources:
1. FSAR pg. 6.5.2
2. Technical Specifications, pg. 5-2-1.
3. IPP System Description, No. 10.2, "Containment Spray System", pg. 3.

Assumption(s):

Calculation(s): Containment design pressure = 47 psig (Ref. 1 to 3).

SETPOINT DOCUMENTATION SHEET

T. CONTAINMENT VALUES

4. Setpoint/Value Description: Pressure for resetting spray signal minus allowances for normal channel accuracy.

Determined Setpoint/Value: 2 psig

Specific Instrument Usage: Containment Pressure

Guidelines: E-1(14), ECA-1.1(3), ECA-2.1(11), ECA-3.1(2)

References/Sources: 1. IPP Emergency Procedure E-2, pg. 5.

Assumption(s): 1. Normal channel accuracy included in the setpoint of current Emergency Procedure.

Calculation(s): Per Ref. 1, containment spray pumps should be secured if containment pressure < 2 psig.

SETPOINT DOCUMENTATION SHEET

T. CONTAINMENT VALUES

5. Setpoint/Value Description: Value corresponding to radiation level alarm setpoint for post accident containment radiation monitor.

Determined Setpoint/Value: 2 R/hr

Specific Instrument Usage: Post Accident Radiation Monitor
-High Range Containment Radiation Monitor RE-25
-High Range Containment Radiation Monitor RE-26

Guidelines: F-0.5(4)

References/Sources: 1. Background Document F-0.5.
2. IPP Alarm Response Procedure pg. 32-1.

Assumption(s):

Calculation(s): Per Ref. 2, alarm set points for containment radiation monitors.
RE-26 = 2 R/hr
RE-25 = 2 R/hr

T. CONTAINMENT VALUES

6. Setpoint/Value Description: Radiation level for isolation of containment. Refer to background document for guideline ECA-0.0, LOSS OF ALL AC POWER.

Determined Setpoint/Value: 10 R/hr

Specific Instrument Usage: Post Accident Radiation Monitor
- High Range Containment Radiation Monitor RE-26.
- High Range Containment Radiation Monitor RE-25.

Guidelines: ECA-0.0(12)

References/Sources:
1. IPP Alarm Response Procedure, pg. 32-1 and 32-9.
2. W provided.

Assumption(s):

Calculation(s): Per Ref. 2, use radiation level for a LOCA without fuel damage. Per Ref. 1, radiation level for a LOCA
= 15 R/hr for radiation monitor RE-26
= 10 R/hr for radiation monitor RE-25
Use 10 R/hr for both monitors

SETPOINT DOCUMENTATION SHEET

T. CONTAINMENT VALUES

7. Setpoint/Value Description: Containment water level just below design flood level minus allowances for normal channel accuracy.

Determined Setpoint/Value: 49' 9" (Elevation)

Specific Instrument Usage: Containment Water Level

Guidelines: F-0.5(3)

References/Sources:
1. Instrument Uncertainty, W provided.
2. Con. Ed. letter to NRC dated May 27, 1976.

Assumption(s):

Calculation(s): Containment flood level = 50'5" (Ref. 2)
Per Ref. 1, normal accuracy = 3.39% of 216"
= .0339 x 216" = 7.3"
Flood level = 50'5" - 7.3" = 49' 9" (elevation)

SETPOINT DOCUMENTATION SHEET

T. CONTAINMENT VALUES

8. Setpoint/Value Description: Sump level necessary for containment spray recirculation, including allowances for normal channel accuracy.

Determined Setpoint/Value: Not applicable to Indian Point Unit 2.

Specific Instrument Usage: N/A

Guidelines: N/A

References/Sources:

Assumption(s):

Calculation(s):

SETPOINT DOCUMENTATION SHEET

T. CONTAINMENT VALUES

9. Setpoint/Value Description: Sump level necessary for containment spray recirculation, including allowances for normal channel accuracy and post accident transmitter errors.

Determined Setpoint/Value: Not applicable to Indian Point Unit 2.

Specific Instrument Usage: N/A

Guidelines: N/A

References/Sources:

Assumption(s):

Calculation(s):

SETPOINT DOCUMENTATION SHEET

T. CONTAINMENT VALUES

10. Setpoint/Value Description: The containment free air volume in cubic feet.

Determined Setpoint/Value: 2.61×10^6 ft^3

Specific Instrument Usage: None

Guidelines: FR-I.3(16)

References/Sources: 1. FSAR, pg. 6.4-1.

Assumption(s):

Calculation(s): Containment free air volume = 2.61×10^6 ft^3 (Ref. 1)

SETPOINT DOCUMENTATION SHEET

T. CONTAINMENT VALUES

11. Setpoint/Value Description: Curve for "HYDROGEN FLOW RATE VERSUS RCS PRESSURE". See background document for FR-I.3, RESPONSE TO VOIDS IN REACTOR VESSEL.

Determined Setpoint/Value: See Figure 1

Specific Instrument Usage: Wide Range RCS Pressure

Guidelines: FR-I.3 (Fig. FRI3-1)

References/Sources: 1. IPP Abnormal Operating Instruction A-43 "Voids in Reactor Vessel."

Assumption(s):

Calculation(s): Use "Hydrogen flow rate versus RCS pressure" curve from Ref. 1.

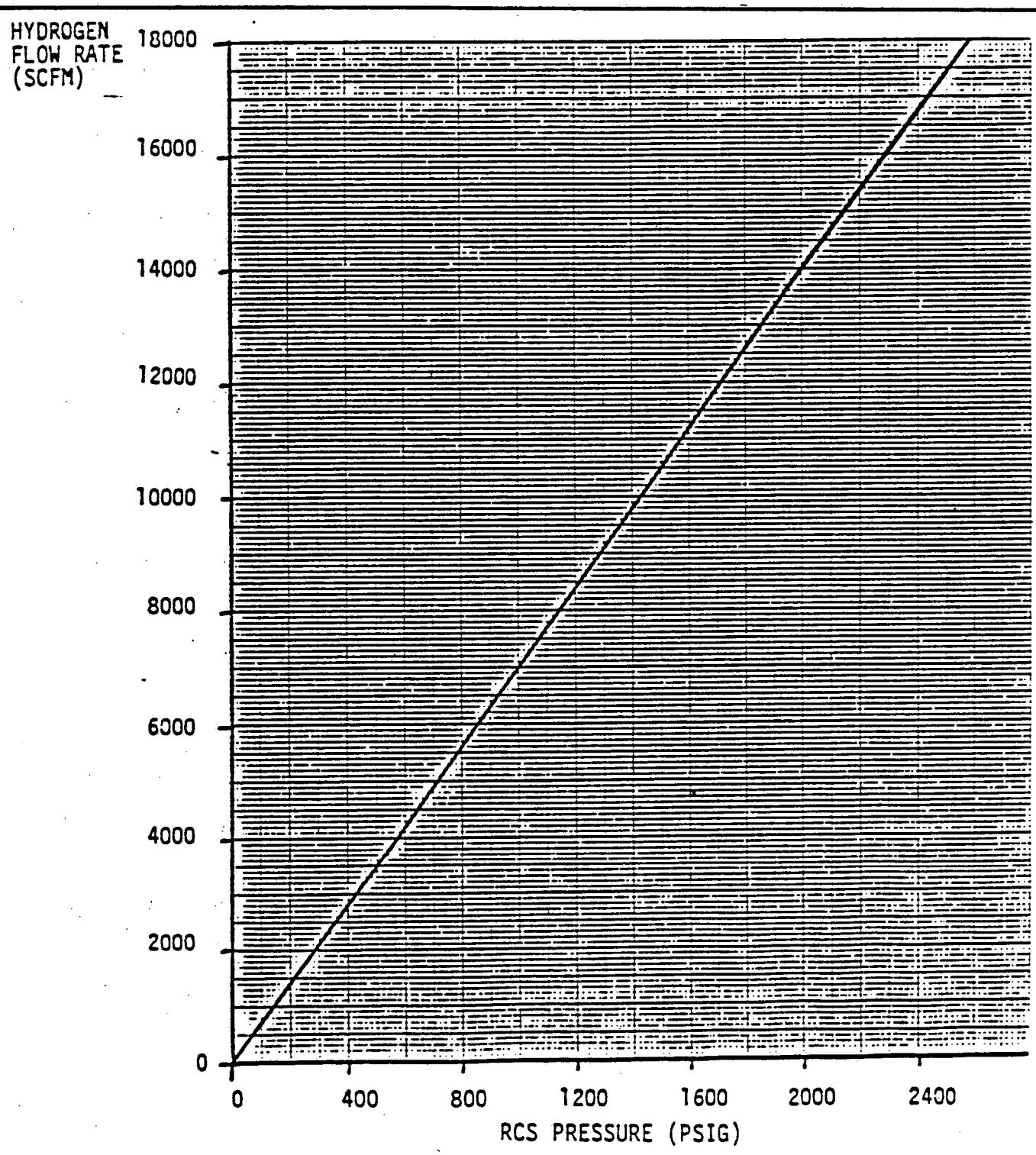

FIGURE FRI3-1, HYDROGEN FLOW RATE VS. RCS PRESSURE

SETPOINT DOCUMENTATION SHEET

T. CONTAINMENT VALUES

12. Setpoint/Value Description: Value corresponding to limit of operability of hydrogen recombiners in plant specific units. Refer to guideline FR-Z.1, RESPONSE TO HIGH CONTAINMENT PRESSURE.

Determined Setpoint/Value: 4% hydrogen by volume

Specific Instrument Usage: Hydrogen concentration

Guidelines: FR-Z.1(2), FR-C.1

References/Sources: 1. IPP System Description No. 10.9, "Post Accident Hydrogen Control System", pg 4.

Assumption(s):

Calculation(s): Per Ref. 1, limit of operability of hydrogen recombiner is 4%.

T. CONTAINMENT VALUES

13. Setpoint/Value Description: Number of fan coolers determined from background document of guideline ECA-1.1, LOSS OF EMERGENCY COOLANT RECIRCULATION.

Determined Setpoint/Value: See Table ECA 11.1

Specific Instrument Usage: N/A

Guidelines: ECA-1.1(5)

References/Sources:
1. IPP System Description, No. 10.0, "Engineered Safeguards System", pg 7.
2. IPP System Description, No. 10.3, "Containment Cooling and Filtration System", pg 2.
3. IPP System Description, No 10.2, "Containment Spray System", pg. 2.
4. W provided.
5. FSAR Section 14.3.5, "Containment Integrity Analysis."
6. W provided.

Assumption(s):

Calculation(s): Per Ref. 1, minimum spray requirements are
1. Three fan coolers and one spray pump, or
2. All five fan coolers, or
3. Both spray pumps

Total number of fan coolers = 5 (Ref. 2)

Total number of spray pumps = 2 (Ref. 3)

1. Minimum Spray Requirements

Per Ref. 4, with 1 spray pump and 2 fan coolers, maximum containment pressure = 45.8 psig at ~600 sec. Therefore, two fan coolers and one spray pump are minimum spray requirements.

2. Best Estimated Spray Requirements

From Ref. 5 Figure 14.3 - 116,

at ~600 sec, heat removal by 3 fan coolers = 25×10^6 BTU

1 spray pump = 20×10^6 BTU

Heat removal by 4 fan coolers = 33.3×10^6 BTU

1 spray pump and 2 fan coolers = 36.7×10^6 BTU

Using the rule of thumb 10^6 BTU reduction in heat removal = .16 psi increase in containment pressure

(i) With 4 fan coolers, maximum containment pressure

$= 45.8 + (36.7 - 33.3) \times .16 = 46.344$ psig

With 4 fan coolers running, no spray pumps are required.

(ii) With 1 spray pump and 1 fan cooler, maximum containment pressure

$= 45.8 + (36.7 - 20 - 8.3) \times 0.16 = 47.14$ psig

From Ref. 6, best estimated pump flow

$= \frac{2750}{2530}$ times of minimum pump flow

maximum containment pressure $= 45.8 + (36.7 - 20 \times \frac{2750}{2530} - 8.3) \times 0.16$

$= 46.87$ psig < 47 psig

With 4 fan coolers running, only one spray pump is required.

3. Table ECA 11.1 summarizes the results.

TABLE ECA 11.1

Number of Fan Coolers for Loss of Emergency Coolant Recirculation

RWST Level	Containment Pressure	Fan Coolers Running in Emergency Mode	Spray Pumps Required
Greater Than 10.23 ft	Greater than 47 psig	-	2
	Between 2 psig and 47 psig	0, 1	2
		2, 3, 4	1
		5	0
	Less than 2 psig	-	0
Between 10.23 ft and 2 ft	Greater than 47 psig	-	2
	Between 2 psig and 47 psig	0	2
		1, 2, 3, 4, 5	1
			0
	Less than 2 psig	-	0
Less than 2 ft	-	-	0

SETPOINT DOCUMENTATION SHEET

U. TANK VALUES

1. Setpoint/Value Description: Value corresponding to CST low level switchover setpoint in plant specific units.

Determined Setpoint/Value: 2 ft

Specific Instrument Usage: CST Level

Guidelines: E-0(16), ES-0.2(1), ES-0.4(18), E-1(3), ES-1.1(7), ES-1.2(4), ES-1.4(14), E-2(1), E-3(7), ES-3.1(5), ES-3.2(5), ES-3.3(5), ECA-0.0(6), ECA-0.1(8), ECA-0.2(4), ECA-2.1(7), ECA-3.1(5), ECA-3.2(4), ECA-3.3(3), FR-C.1(4), FR-C.2(10)

References/Sources:
1. IPP Abnormal Operating Instruction A-4-B, pg. 6.
2. IPP SOP 21.3.6

Assumption(s):

Calculation(s): Per Ref. 1, CST $<$ 3 ft, switchover to city water
Per Ref. 2, CST low level = 2 ft
Use 2 ft. per discussion with IPP personnel

SETPOINT DOCUMENTATION SHEET

U. TANK VALUES

2. Setpoint/Value Description: Level corresponding to RWST switchover setpoint in plant specific units.

Determined Setpoint/Value: 10.23 ft

Specific Instrument Usage: RWST Level

Guidelines: E-1(18), ES-1.2(1), ES-1.4(13), ES-3.3(25), ECA-0.2(1), ECA-1.1(2), ECA-2.1(12), ECA-3.1(1), ECA-3.2(1), FR-C.1(1), FR-C.2(1), FR-C.3(1), FR-H.1(10)

References/Sources:
1. System Description, No. 10.2, "Containment Spray System", pg. 12.
2. IPP Abnormal Operating Instruction A-4-B-2, pg. 3.

Assumption(s):

Calculation(s): Per Ref. 1, RWST low level alarm = 13.5 ft.
low-low level alarm = 10.7 ft.
Per Ref. 2, RWST switchover level = 10.23 ft.
Use 10.23 ft.

SETPOINT DOCUMENTATION SHEET

U. TANK VALUES

3. Setpoint/Value Description: Value corresponding to RWST empty alarm in plant specific units.

Determined Setpoint/Value: 2.0 ft

Specific Instrument Usage: RWST Level

Guidelines: ECA-1.1(1)

References/Sources: 1. IPP SOP 10.2.4

Assumption(s):

Calculation(s): Per Ref. 1, containment spray pumps do not operate if RWST level < 2.0 ft.

SETPOINT DOCUMENTATION SHEET

U. TANK VALUES

4. Setpoint/Value Description: RWST level versus containment sump volume curve as derived from background document to guideline ECA-3.1, SGTR WITH LOSS OF REACTOR COOLANT - SUBCOOLED RECOVERY DESIRED, including allowances for normal channel accuracy.

Determined Setpoint/Value: See Figure ECA 31-1

Specific Instrument Usage: Recirculation Sump Level
RWST Level

Guidelines: ECA-3.1(12)

References/Sources:
1. Technical Specifications pg. 3.3-16
2. Discussion with Bob Redding on 9/6/84 am
3. IPP Abnormal Operating Instruction A-4-B-2, pg. 3.
4. IPP System Description No. 10.1, "Safety Injection," Figure 10.
5. ERG Background Document ECA-3.1 step 12.
6. Containment water volume vs level information obtained from IPP personnel.

Assumption(s):

Calculation(s): From Ref. 1, minimum RWST volume = 345,000 gallons

RWST switchover level = 10.23 ft. (Ref. 3)

From Figure 1, RWST volume at 10.23 ft.

= 92,800 gpm

$$\text{Average} = \frac{345{,}000 + 92{,}800}{2} = 218{,}900 \text{ gpm} = V_{12}$$

$V_{RWST} + (V_{sump} - V_{min}) = V_{12}$ (Ref. 5)

Sump level necessary for containment spray recirculation = 42' 8" (Ref. 4, includes 8" uncertainty)

*V_{min} = Total volume below 46' - Recirculation sump volume above 42' 8" = 81121 - 4198 = 76923 gallons

$V_{sump} = V_{12} + V_{min} - V_{RWST} = 218{,}900 + 76{,}923 - V_{RWST}$

$= 295{,}823 \text{ gallons} - V_{RWST}$

(1) For RWST level = 23.3 ft.

V_{RWST} = 218,900 gallons

$V_{sump} = 295{,}823 - V_{RWST} = 295{,}823 - 218{,}900 =$ 76,923 gallons

Sump level = 45' 5" (elevation) = 137"

(2) For sump level = 0"

V_{RWST} = 295,823 gallons

RWST level = 31.55 ft.

(3) Calculations for RWST level between 0 and 23.3 ft. are summarized in Table 1.

* After recirculation sump level reaches 46', water spills over and fills the cavity sump. This volume (~80,000 gallons) has not been included in the available water for recirculation

Table 1

RWST		SUMP	
Level (ft)	Volume (gallon)+	Volume (gallon)	Level
31.55	295823	0	34'0"
23.3	218900	76923	45'5"
22.9	214702	81121	46'0"
22.0	206250	89573	46'1"
20.0	187500	108323	46'4"
18.0	168750	127073	46'7"
16.0	150000	145823	46'9"
14.0	131250	164573	47'0"
12.0	112500	183323	47'3"
10.0	93750	202073	47'5"
8.0	75000	220823	47'8"
6.0	56250	239573	47'11"
4.0	37500	258323	48'1"
2.0	18750	277073	48'4"
0.0	0	295823	48'7"

+ RWST level vs volume presented in Figure 1

* Sump volume vs level presented in Table 2

Figure 1

INDIAN POINT STATION
UNIT NO.2
REFUELING WATER STORAGE TANK

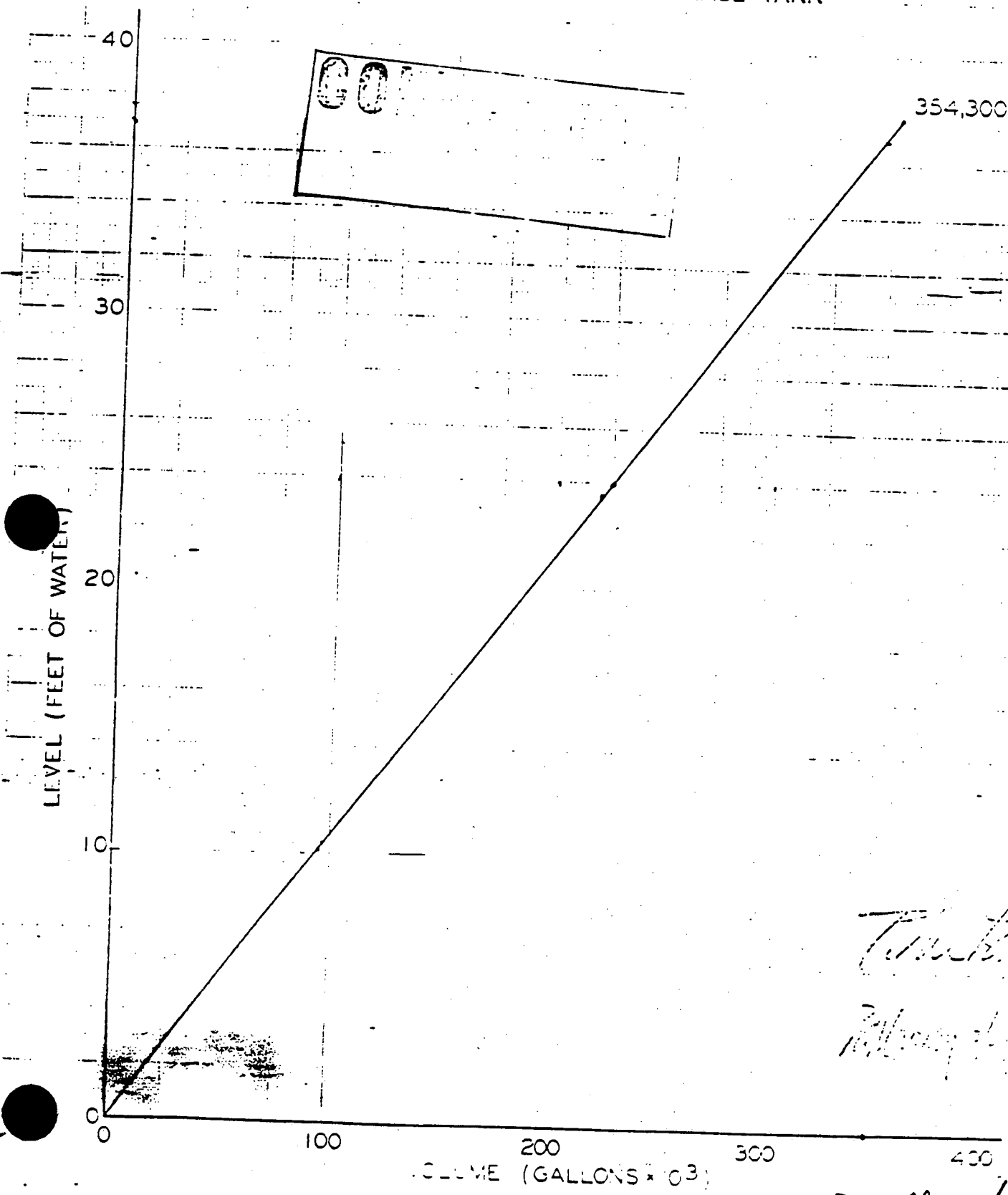

9375 gallons /ft

Table 2. Sump Volume vs Level

Water Level (ft)	Volume (gallons)*
34'	0
46'	81,121
47'	164,521
48'	247,921
49'	333,596
50'	417,249

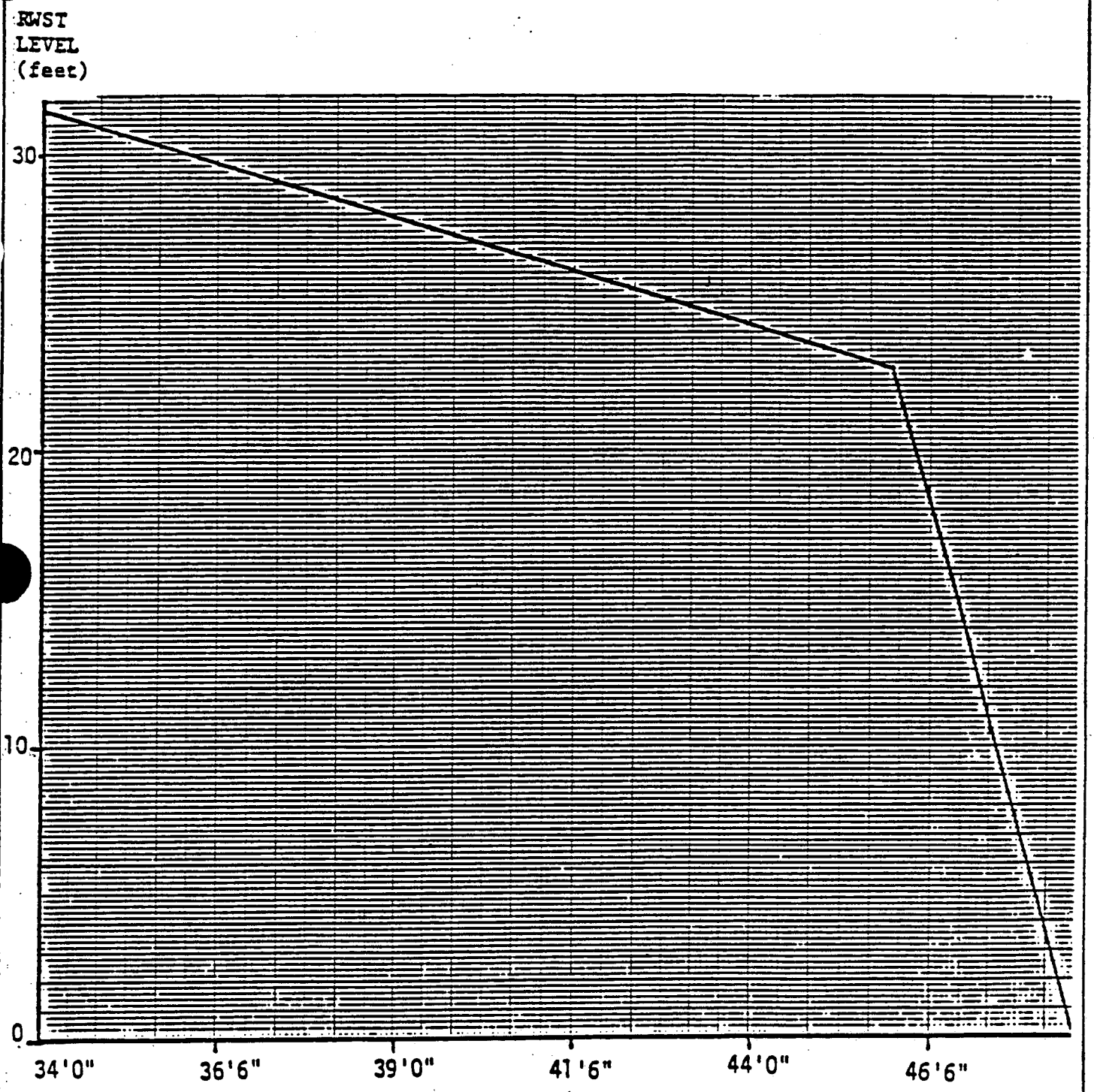

FIGURE ECA31.1, RECIRCULATION SUMP LEVEL vs. RWST LEVEL

SETPOINT DOCUMENTATION SHEET

U. TANK VALUES

5. Setpoint/Value Description: Spent fuel pit level in plant specific units (for start of make up). Refer to background document for guideline ECA-0.0, LOSS OF ALL AC POWER.

Determined Setpoint/Value: Not Applicable

Specific Instrument Usage:

Guidelines: ECA-0.0(14)

References/Sources:

Assumption(s):

Calculation(s):

SETPOINT DOCUMENTATION SHEET

U. TANK VALUES

6. Setpoint/Value Description: Low Temperature alarm setpoints for BIT and BAT.

Determined Setpoint/Value: BIT Temperature = 155°F
BAT Temperature = 155°F

Specific Instrument Usage: BIT and BAT Temperature

Guidelines: ECA-0.0(13), ECA-0.2(3)

References/Sources:
1. PLS Document, P-7-11
2. PLS Document, P-3-10
3. Emergency Procedure A-4-B, pg. 8.

Assumption(s):

Calculation(s): BIT low temperature alarm setpoints (Ref. 1)

T - 944 A 155°F ± 2°F

T - 944 B 150°F ± 2°F

BAT low temperature alarm setpoints (Ref. 2)

= 155°F ± 2°F

BIT and BAT low temperature setpoint = 155°F (Ref. 3)

Use 155°F

SETPOINT DOCUMENTATION SHEET

U. TANK VALUES

7. Setpoint/Value Description: BIT switchover alarm in plant specific units.

Determined Setpoint/Value: 10%

Specific Instrument Usage: BIT Level

Guidelines: ECA-0.2(2)

References/Sources: 1. IPP System Description No. 10.1, "Safety Injection," pg. 12.

Assumption(s):

Calculation(s): BIT very low level alarm = 10% (Ref. 1)

SETPOINT DOCUMENTATION SHEET

V. ELAPSED TIME VALUES

1. Setpoint/Value Description: Time for transferring to hot leg recirculation.

Determined Setpoint/Value: 24 hours

Specific Instrument Usage: Clock

Guidelines: E-1(20)

References/Sources: IPP Emergency Procedure E-1, pg. 16.

Assumption(s):

Calculation(s): Time for transferring to hot leg recirculation = 24 hrs per Ref. 1.

SETPOINT DOCUMENTATION SHEET

V. ELAPSED TIME VALUES

2. Setpoint/Value Description: Time for preparing for hot leg recirculation.

Determined Setpoint/Value: 23 hours

Specific Instrument Usage: Clock

Guidelines: E-1(19)

References/Sources: 1. Calculation for "Time for transferring to hot leg recirculation," V1.

Assumption(s): 1. Allow 1 hour to transfer to hot leg recirculation.

Calculation(s): Time for preparing for hot leg recirculation
= 24 hours -1 hour = 23 hours (Ref. 1, Ass. 1)

SETPOINT DOCUMENTATION SHEET

V. ELAPSED TIME VALUES

3. Setpoint/Value Description: Time for which low-head SI pump can run, without CCW to the RHR heat exchangers.

Determined Setpoint/Value: 1.5 hours

Specific Instrument Usage: Clock

Guidelines: FR-C.1(2), FR-C.2(14)

References/Sources: 1. W provided

Assumption(s):

Calculation(s): Time for which RHR pumps can be operated on recirculation before providing cooling water to the RHR heat exchangers is 107 minutes (Ref. 1).
107 minutes = 1.78 hours
Use 1.5 hours for conservatism

SETPOINT DOCUMENTATION SHEET

V. ELAPSED TIME VALUES

4. Setpoint/Value Description: Time derived from background document for FR-P.1, RESPONSE TO IMMINENT PRESSURIZED THERMAL SHOCK CONDITION (soak time before RCS cooldown is permitted).

Determined Setpoint/Value: 1 hour

Specific Instrument Usage: Clock

Guidelines: FR-P.1(18)

References/Sources: 1. Background Document FR-P.1.

Assumption(s):

Calculation(s): Per Ref. 1, 1 hour.

SETPOINT DOCUMENTATION SHEET

W. REACTOR COOLANT PUMPS (RCP) VALUES

1. Setpoint/Value Description: Minimum seal differential pressure for continued RCP operation including allowances for normal channel accuracy.

Determined Setpoint/Value: 275 psid

Specific Instrument Usage: RCP Number 1 Seal Differential Pressure

Guidelines: ES-1.2(21), ES-3.1(20), ES-3.2(18), ES-3.3(18), ECA-1.1(13), ECA-3.1(28), ECA-3.2(22), ECA-3.3(22)

References/Sources:
1. PLS Document, P-2-6.
2. System Description, No. 1, "Reactor Coolant System," pg. 51.

Assumption(s):

Calculation(s): Minimum seal differential pressure = 275 psi (Ref. 1 and 2).

W. REACTOR COOLANT PUMPS (RCP) VALUES

2. Setpoint/Value Description: Minimum seal leakoff for continued RCP operation, including allowances for normal channel accuracy.

Determined Setpoint/Value: Leakoff rate = .2 gpm

Specific Instrument Usage: RCP #1 Seal Leakoff Flow

Guidelines: ES-1.2(22), ES-3.1(21), ES-3.2(19), ES-3.3(19), ECA-1.1(14), ECA-3.1(29), ECA-3.2(23), ECA-3.3(23)

References/Sources:
1. IPP System Description No 3, "Chemical and Volume Control System", pg 39.
2. IPP System Description No 1, "Reactor Coolant System", pg 85.
3. IPP SOP 1.3-9

Assumption(s):

Calculation(s): Seal leakoff low flow alarm = .3 gpm (Ref. 1)
Minimum seal return flow = .2 gpm (Refs. 2 and 3)
Use .2 gpm consistent with SOP

W. REACTOR COOLANT PUMPS (RCP) VALUES

3. Setpoint/Value Description: Loop designation for RCP which provides best PRZR spray capability.

Determined Setpoint/Value: Loop 24

Specific Instrument Usage:

Guidelines: FR-C.2(8)

References/Sources: 1. IPP System Description No 1, "Reactor Coolant System", pg 55.

Assumption(s): 1. Best spray capability is from loop with pressurizer.

Calculation(s): Per Ref. 1, Loop 24 provides best spray capability (Ass. 1).

SETPOINT DOCUMENTATION SHEET

W. REACTOR COOLANT PUMPS (RCP) VALUES

4. Setpoint/Value Description: RCP trip parameter and setpoint, including allowances for normal channel accuracy. Refer to document RCP TRIP/RESTART in Generic Issues Section of Executive Volume.

Determined Setpoint/Value: 1250 psig

Specific Instrument Usage: Wide Range RCS Pressure

Guidelines: E-0(12), ES-0.4(7), E-1(1), E-3(1), ECA-2.1(5)

References/Sources:
1. RCP TRIP/RESTART in Generic Issues of Executive Volume.
2. W provided.
3. IPP System Description No. 18, "Main and Reheat Steam," pg. 5.
4. Instrument Uncertainty, W provided.
5. Model 44 Steam Generator TD sketch sheet
6. W provided.
7. ASME Steam Tables
8. W provided.
9. W provided.
10. W provided.
11. IPP System Description 10.1, "Safety Injection," pg. 7.
12. Con. Ed. Co. Dwg No A200637
13. Con. Ed. letter to NRC dated December 20, 1985.
14. Memorandum from Louis F. Liberatori to John Basile, et. al. dated July 20, 1984.

Assumption(s):

Calculation(s):

Follow the calculation steps of Ref. 1

1) Decay heat level = 3.5% (Ref. 1)

2) Steam flow rate

Core power = 2758 MWt (Ref. 2)

Number of loops = 4 (Ref. 2)

Assume RCP heat = 14 MWt/4loop = 3.5 MWt/loop

Heat input per SG

$$Q = \left(\frac{2758\ \text{MWt}}{4\ \text{loops}} \times .035 + \frac{14\ \text{MWt}}{4\ \text{loops}}\right) \times 3412141\ \frac{\text{Btu}}{\text{Mw-hr}} = 0.943 \times 10^8\ \frac{\text{Btu}}{\text{hr-loop}}$$

lowest safety valve pressure = 1065 psig = 1080 psia (Ref. 3)

h_{fg} (1080 psia) = 635.3 Btu/lbm

$$\text{Steam flow rate /loop} = \frac{0.943 \times 10^8}{635.3} = 1.484 \times 10^5\ \text{lbm/hr-loop}$$

$$100\ \%\ \text{Steam flow} = \frac{11.66}{4} \times 10^6\ \frac{\text{lbm/hr}}{\text{loop}} = 2.915 \times 10^6\ \frac{\text{lbm/hr}}{\text{loop}}\ \text{(Ref. 2)}$$

3) Safety valve set pressure selection

$$\text{Steam flow rate /loop} = \frac{1.484 \times 10^5}{2.915 \times 10^6} = 0.051 = 5.1\ \%\ \text{of rated steam flow.}$$

IPP has 5 safety valves of ~20% capacity each.

Steam flow rate is 5.1% of rated flow or 26% of the capacity of the lowest safety valve.

Use lowest safety valve pressure = 1065 psig

4) Uncertainties on the SG safety valve opening pressure

Add 3% accumulation and tolerance error.

SG pressure = 1080 x 1.03 = 1112 psia

5) ΔP between the safety valves and the SG shell

ΔP between safety valves and tube = 20 -30 psi at rated flow

$$\Delta P = 30 \times (.051)^2 = 0.08\ \text{psi} < 1\ \text{psi}$$

Use 1 psi

6) ΔP across steam generator tube

ΔT full power = 596.0 - 543.0 = 53°F (Ref. 2)

NSSS power at 100% = 2758 MWt

NSSS power at 3.5% = 2758 x .035 + 14 = 110.53 MWt

Power fraction = $\frac{110.53}{2758}$ = .04

ΔT (3.5%) = 53°F x .04 = 2.12°F

LMTD (3.5%) = 1.443 x ΔT (3.5%) = 3.06°F

$\Delta P = P_{sat}$ [T_{sat} (1081 psia) + 3.06°F] - 1081 psia = 1107.9-1081=26.9psi

7) ΔP between the wide range RCS pressure instrument and the top of the steam generator tube.

ΔP = Friction of SG + Friction of hot leg + Elevation pressure drop

$$\Delta P_{fric} = \frac{K(ft/gpm^2)}{144\ in^2/ft^2} \times (\text{Loop flow}^2)\ (gpm^2) \times \rho_{RCS}\ (lbm/ft^3)$$

$\rho_{RCS} = \rho$ (547°F) = 46.3 lbm/hr (Ref. 7)

Loop flow = 89700 gpm/loop = 136.1 x 10^6 lb/hr (Ref. 2)

K SG inlet plenum = .14493 x 10^{-8} (Ref. 8)

K SG straight section, hot side = .43137 x 10^{-8} (Ref. 8)

K half of bend section = 1/2 x .13827 x 10^{-8} (Ref. 8)

K hot leg = 6 x 10^{-10} (Ref. 6)

ΣK = 7.05 x 10^{-9} ft/gpm^2 (Ref. 6)

$$\Delta P\ fric = \frac{7.05 \times 10^{-9}}{144} \times (89700^2) \times 46.3 = 18.2\ psi$$

Elevation pressure drop from instrument tap elevatin to top of the tube bundle:

Top of the tube to bottom of SG plenum = 36.147 ft

Hot leg diameter = 2.42 ft. (Ref. 10)

Instrument tap is at top of hot leg (Ref. 12)

Total elevation change = 36.147 + 0 = 36.147 ft.

$$\Delta P_{elev} = \rho \frac{g}{gc} L/144 = \frac{46.3 \times 36.147}{144} = 11.6\ psig$$

$\Delta P = \Delta P_{elev} + \Delta P_{fric}$ = 11.6 psig + 18.2 psig = 29.8 psig

8) Instrument uncertainty

normal uncertainty = (.03) (3000 psi) = 90 psi

adverse uncertainty = (.13) (3000 psi) = 390 psi

9) Summary

Set pressure of SG safety valve		(step 3)	1065 psig
3% accumulation pressure		(step 4)	32 psi
Steam line ΔP		(step 5)	1 psi
Primary to secondary ΔP		(step 6)	27 psi
Primary ΔP		(step 7)	30 psi
Instrument uncertainty	- normal	(step 8)	90 psi
	- adverse	(step 8)	390 psi
RCP trip pressure	- normal		1245 psig
	- adverse		1545 psig

II. RCS subcooling

RCP trip setpoint should be zero degree subcooling plus instrument uncertainties.

	Subcooling Monitor		Steam Table	
	Normal	Adverse	Normal	Adverse
RCS Subcooling	27	121	33	136

Uncertainty (°F) (Ref. 4)

500 psia to 2500 psia

Use steam table to determine RCS subcooling

III. Secondary pressure dependent RCS pressure

Calculations are the same as for RCS pressure trip parameter except:

1. ΔP (primary to secondary) depends on the steamline pressure

At safety valve pressure, ΔP = 27 psi

At no load pressure, P_{sat} (547°F) = 1005 psig

$T_{sec} = T_{sat}$ (1005 + 15 + 1) = T_{sat} (1021 psia) = 547°F

T_{prim} = 547°F + 3.06 = 550.06°F

Pprim = Psat (550.06°F) = 1047 psia

ΔP = 1047 psi - 1021 psi = 26 psi

Use ΔP at safety valve pressure = 27 psi

2. Instrument uncertainty (Ref. 4)

RCS pressure	normal uncertainty	= 90 psi
	adverse uncertainty	= 390 psi
Steamline pressure	normal uncertainty	= 36 psi
	adverse uncertainty	= 36 psi

Summary

	Normal	Adverse
Steamline ΔP	1 psi	1 psi
Primary to secondary ΔP	27 psi	27 psi
Primary ΔP	30 psi	30 psi
RCS pressure uncertainty	90 psi	390 psi
Steamline pressure uncertainty	36 psi	36 psi
RCP trip parameter primary/secondary pressure differential	184 psi	584 psi

IV. Results

	RCP Trip Criteria		
	RCS Pressure	RCS Subcooling	RCS/Secondary ΔP
Minimum values for SGTR and non-LOCA transients per Ref. 13	1300 psig	31°F	293 psi
Indian Point 2 EOP value calculation			
Normal	1245 psig	33°F	184 psi
Adverse	1545 psig	136°F	584 psi

All trip criteria are acceptable; for improved human factors use RCS pressure for RCP trip criteria conservatively rounding up to the nearest readable scale increment.

Normal	1250 psig
Adverse	1550 psig

SETPOINT DOCUMENTATION SHEET

W. REACTOR COOLANT PUMPS (RCP) VALUES

5. Setpoint/Value Description: RCP trip parameter and setpoint, including allowances for normal channel accuracy and post accident transmitter errors. Refer to document RCP TRIP/RESTART in Generic Issues Section of Executive Volume.

Determined Setpoint/Value: 1550 psig

Specific Instrument Usage: Wide Range RCS Pressure

Guidelines: E-0(13), ES-0.4(8), E-1(2), E-3(2), ECA-2.1(6)

References/Sources: 1. Calculation for "RCP trip parameter and setpoint, including allowances for normal channel accuracy", W.4.

Assumption(s):

Calculation(s): See Ref. 1

X. OTHER PARAMETERS

1. Setpoint/Value Description: Parameter and setpoint for diagnosing loss of secondary heat sink, including allowances for normal channel accuracy. Refer to background document for guideline FR-H.1, RESPONSE TO LOSS OF SECONDARY HEAT SINK.

Determined Setpoint/Value: Average of the 3 lowest wide range SG levels is less than 40% or PRZR pressure is greater than 2335 psig due to loss of secondary heat sink.

Specific Instrument Usage: SG Wide Range Level
RCS Wide Range Pressure

Guidelines: FR-H.1(2)

References/Sources:
1. Background document FR-H.1, "Response to loss of secondary heat sink"
2. Instrument Uncertainty, W provided.
3. FSAR Table 4.1-3
4. W provided.

Assumption(s):

Calculation(s): Per Ref. 3, IPP has two pressurizer PORVs with capacity of 179,000 lbm/hr per valve

2X(179,000 lbm/hr) = 358,000 lbm/hr

Core power = 2758 MWt (Ref. 4)

$$\text{PORV flow to power ratio} = \frac{358,000}{2758} \text{ (lbm/hr) /MWt}$$

$$= 130 \text{ (lbm/hr) /MWt}$$

$$< 177 \text{ (lbm/hr) /MWt}$$

Per Ref. 1, symptom for a plant with a PORV flow to power ratio of < 177 (lbm) MWt with a non-qualified wide range level channel per SG is "N-2" wide range levels to be less than 57% plus uncertainty.

Per Ref 2, wide range level normal channel accuracy = 3.64%.

Calibration error at 50% level is - 10.9% < error < -4.3%

Level = 57% + 3.64% - 4.3% = 56.34%

Parameter for diagnosing loss of secondary heat sink is

(1) Wide range level in any 2 SGs is less than 57% <u>or</u> PRZR pressure is greater than 2335 psig.

An alternative to the above parameter is using an average of 3 lowest SG levels for diagnosing loss of secondary heat sink.

Level = 57% x 2/3 + 3.64% - 4.3% = 37.34%

Use 40%

Parameter for diagnosing loss of secondary heat sink is

(2) Average wide range level in 3 lowest SGs is less than 40%.

X. OTHER PARAMETERS

2. Setpoint/Value Description: Parameter and setpoint for diagnosing loss of secondary heat sink, including allowances for normal channel accuracy and post accident transmitter errors. Refer to background document for guideline FR-H.1, RESPONSE TO LOSS OF SECONDARY HEAT SINK.

Determined Setpoint/Value: Narrow range level in all SGs is less than 29% or PRZR pressure is greater than 2335 psig due to loss of secondary heat sink.

Specific Instrument Usage: SG Narrow Range Level
RCS Wide Range Pressure

Guidelines: FR-H.1(3)

References/Sources:
1. Calculation for "Parameter and setpoint for diagnosing loss of secondary heat sink including normal accuracy", X1.
2. Background Document FR-H.1, "Response to loss of secondary heat sink".
3. Calculation for "SG level just in the narrow range including adverse uncertainty", M3.

Assumption(s):

Calculation(s): Per Ref. 1, PORV flow to power ratio
= 130 (lbm/hr) /MWt < 177 (lbm/hr) / MWt
One non-qualified SG wide range level channel per SG
Per Ref. 2, parameter for diagnosing loss of secondary heat sink is narrow range level in all SGs is less than 29% or PRZR pressure is greater than 2335 psig (Ref. 3)

X. OTHER PARAMETERS

3. Setpoint/Value Description: Adverse Containment Conditions. Refer to GENERIC INSTRUMENTATION in the Generic Issues of the Executive Volume.

Determined Setpoint/Value: Either 10^5 R/hr Radiation Level
or Containment Pressure = 4 psig

Specific Instrument Usage: Narrow Range Containment Pressure
Containment Radiation Monitor

Guidelines: All

References/Sources:
1. Generic Instrumentation of Generic Issues of Executive Volume
2. W provided.
3. Technical Specifications, Table 3-1.
4. Instrument Uncertainty, W provided.

Assumption(s):

Calculation(s):
1. Radiation level for adverse containment is $10^5 \sim 10^6$ R/hr (Ref. 1). Use 10^5 R/hr
2. Per Ref. 2, tolerable temperature limit = 228°F
   Assume containment superheat = 50°F
   Containment saturation temperature = 178°F
   Corresponding saturation pressure = 7.2 psia

Calculation Contd.: Partial pressure of steam = 7.2 psi (P_s)
Partial pressure of air (for initially approx. 20% relative humidity) = 14.4 psi (P_a)
Total containment pressure = $P_s + P_a$ = 7.2 + 14.4
21.6 psia

Maximum containment pressure = 21.6 psia = 6.9 psig

Per Ref. 4, normal uncertainty for narrow range containment pressure = (.03) (80 psi) = 2.4 psi

Acceptable pressure = 6.9 psig - 2.4 psi = 4.5 psig

Use 4 psig for adverse containment pressure

Attachment 9

Generation Support Administrative Directive -
3; EOP Maintenance Program

Consolidated Edison Company of New York, Inc.
Indian Point Unit No. 2
February , 1987

INDIAN POINT STATION

Generation Support Section

GENERATION SUPPORT ADMINISTRATIVE DIRECTIVE 3 REV. 0

EMERGENCY OPERATING PROCEDURES MAINTENANCE PROGRAM

R N Reddingr
Written by

Leon A. Longnecker
Reviewed by

Mothran Smai for L. Liberatori
Concurrence by
General Manager / Section Head

Alice Hayes #1074, 2/3/87
SNSC Review Mtg. No. / Date

2/3/87
Approved by / Date

Effective Date

Q.A. Program Document

INDIAN POINT STATION

Generation Support Section

GENERATION SUPPORT ADMINISTRATIVE DIRECTIVE 3 REV. 0

EMERGENCY OPERATING PROCEDURES MAINTENANCE PROGRAM

R N Reddemann
Written by

Leon A. Longillo
Reviewed by

Motharu Inai for L. Liberatori
Concurrence by
General Manager / Section Head

Alice Hayes #1074, 2/3/87
SNSC Review Mtg. No. / Date

Approved by / Date

Effective Date

Q.A. Program Document

TABLE OF CONTENTS

Section		Page
1	PURPOSE AND SCOPE	1
2	EOP ADMINISTRATIVE CONTROLS	1
3	FORMAT	4
3.1	Procedure Organization	4
3.2	Procedure Numbering	4
3.3	Page Formats	5
3.4	Instruction Step Numbering	5
4	REVISING THE PROCEDURE	5
4.1	Cover Sheet	6
4.2	Operator Actions	6
4.2.1	Instruction Steps, Left-Hand Column	6
4.2.2	Instruction Steps, Right-Hand Column	7
4.2.3	Use of Logic Terms	8
4.2.4	Notes and Cautions	9
4.2.5	Transitions to Other Procedures or Steps	9
4.2.6	Component Identification	10
4.2.7	Level of Detail	10
4.3	Foldout Page	11
4.4	Revision Index	11
5	STATUS TREE FORMAT	11
6	MECHANICS OF STYLE	12
7	USERS GUIDE	30
Table 1	Definitions of Letter Designators for ERPs	18
Table 2	Abbreviations Used in Emergency Procedures	19
Table 3	Action Verbs	20
Figure 1	Page Format	23
Figure 2	Pre-printed Page (2-Column) Format	24
Figure 3	Cover Sheet Example for E-0	25
Figure 4	Cover Sheet Example for ECA-3	26
Figure 5	Instruction Steps Example	27
Figure 6	Example Foldout Page Format	28
Figure 8	Scheme of Line Pattern Coding Used to Identify Priorities	29
Attachment 1	Change Request Form	48

EMERGENCY OPERATING PROCEDURES MAINTENANCE PROGRAM

1 PURPOSE AND SCOPE

The purpose of this document is to provide administrative and technical guidance on the preparation and control of revisions to the Emergency Operating Procedures (EOP). This guide applies to Optimal Recovery Procedures, Critical Safety Function Status Trees, Emergency Contingency Actions, Function Restoration Procedures and supporting records.

1.1 Optimal Recovery Procedures (ORP) provide the operator with guidance sufficient to effectively recover the plant from nominal emergency conditions and return it to a known safe state from which repair (if required) or return to power can be accomplished. The ORP set is composed of three basic types of procedures:

Nominal Emergency/Upset Response (E-Series)
Event-specific Subprocedures (ES-Series)
Emergency Contingency Actions (ECA-Series)

1.2 Critical Safety Function Status Trees (CSF) provide the operator with a system and explicit means for determining the safety status of the plant for emergency situation. Continuous use of these status trees provide independent verification of the attainment and maintenance of safe plant conditions throughout the recovery.

1.3 Emergency Contingency Actions (ECA) are a subset of the Optimum Recovery Procedures which provide contingency actions for emergencies such as Anticipated Transient Without Scram or Loss of All AC power.

1.4 Function Restoration Procedures (FRP) provide guidance for maintaining the plant in a safe state without regard to initiating event or combinations of subsequent or consequential failures after event diagnosis. FRP's are used when a Critical Safety Function is challenged.

1.5 One set of EOPs will be made up as an E and F book as follows:

1 E book will hold all procedures in Section 1.1 and 1.3.

2 F book will hold all procedures in Section 1.2 and 1.4.

2 EOP ADMINISTRATIVE CONTROLS

2.1 EOP maintenance coordinator shall have an SRO License.

2.1.1 All personnel involved in changes to EOP shall have the minimal level of knowledge described in that function.

2.2 Revision to Emergency Response Guide Line (ERG) shall be made site specific, then implemented into Emergency Operating Procedures.

2.2.1 Each change to the ERGs will undergo the review process and be documented on Attachment 1.

2.3 Review process shall include the following:

2.3.1 Review of Transient analysis to ensure operation is within design limits as described in the FSAR.

2.3.2 Review of Accident Analysis to ensure operation is within design basis as described in the FSAR.

2.3.3 Review against ERG reference plant for design differences.

2.3.4 IF design is same, THEN check ERG basis for source of documentation.

2.3.5 IF design is different, THEN create documentation to cover design difference.

1 Obtain analysis to cover the difference.

2 Obtain a safety evaluation to show compliance.

2.4 The ERG to EOP conversion process shall include input from the following groups:

1 Operations
2 Generation Support (EOP maintenance coordinator)
3 Technical Support (licensing, safety assessment, plant engineering, etc. as appropriate)
4 Training

2.5 Responsibilities of EOP maintenance coordinator:

2.5.1 Ensure the following documents shall be maintained and controlled in the NPG Office unless otherwise indicated.

2.5.1.1 One set Emergency Response Guidelines (ERG-LP)

2.5.1.2 Five sets of site specific background documents:

1 One set in Central Control Room (CCR)
2 One set Training

3 One set in Technical Support Center
4 One set in NPG Office
5 One set EOP Maintenance Program

2.5.1.3 One set of validation and verification documents.

2.5.1.4 Design difference and generic analysis applicability document.

2.5.1.5 EOP step documentation document.

2.5.1.6 EOP Plant specific setpoint document.

2.5.1.7 Five sets of Emergency Operating Procedures, which will be distinguishable from other plant procedures:

1 One set in CCR with a set of colored page markers
2 One set in Training with a set of colored page markers
3 One set in Technical Support Center
4 One set in NPG
5 One set EOP Maintenance Program

2.5.1.8 One set Critical Safety Function Status Trees in CCR.

2.5.2 Control and monitor the revision process.

2.6 The following is a list of requirements for a change to the Emergency Operating Procedures.

1 Administrative - Limited to typing corrections and changing wording for clarity and better understanding of usage. The two column format with Results Not Obtained (RNO) section must be maintained.

2 Step changes - Limited to guidance within the executive volume of the ERG's without new analysis and step documentation which must be followed by another validation and verification of procedures effected. Background document must be adjusted for any changes made to the Emergency Operating Procedures steps.

3 Setpoint changes - Any setpoint change must include all instrument errors. If the instrument is inside Containment, the setpoint must have both a normal and an adverse Containment condition number, as required in step documentation. All changes in setpoints must be entered in the EOP plant specific setpoint document.

4 New additions - Shall have supporting background document and be followed by a validation and verification of procedures affected.

5 Deletions - Shall have supporting background document and be followed by a validation and verification of procedures affected.

2.7 Revision Process (Attachment 2)

2.7.1 Define areas in EOPs that need to be changed.

2.7.2 Ensure all changes to Emergency Operating Procedures have a Change Request form filled out (Attachment 3).

1 Each change shall have appropriate background documentation as described in GSAD-5.

2 Each change shall be authorized by Operations Manager.

NOTES: 1 Temporary Procedure Change (TPCs) as defined in OAD-27 and SAO-102 are authorized for Emergency Operating Procedures only with pre SNSC review.

2 Operations Manager has authority in an emergency to direct deviation from Emergency Operating Procedures. Any such deviation shall be documented in SRO Log book.

2.7.3 Perform validation procedure as described in GSAD-6.

2.7.4 Perform verification procedure as described in GSAD-7.

2.7.5 Prepare revision for pre-SNSC and SNSC review.

1 A licensed SNSC member shall review the changes prior to the revision being presented to SNSC.

2 Generation Support Manager shall review the changes prior to the revision being presented to SNSC.

2.7.6 Prepare revision for Training.

1 Send a copy of revision to Training

2 Prepare a summary of the revision for the Operation Feedback system and place in feedback book.

2.7.7 Issue revision to all controlled copies of EOPs.

2.7.8 Update the following documents:

1 Site specific background document

2 Design difference and general analysis applicability document.

3 EOP step documentation document

4 Plant specific setpoint document

2.7.9 All changes to Emergency Operating Procedures shall be reviewed and items of importance and general issue will be submitted to ERG maintenance program.

ERG to EOP Step Conversion

ERG Revision _____ Procedure Number _____

Step Number _____ Page _____

Change:

EOP Revision as result of this change.

Procedure Number _____

Step Number _____ Page _____

Change:

Operations _____

Generation Support _____
(ERG Maintenance Support)

Technical Support _____

Training _____

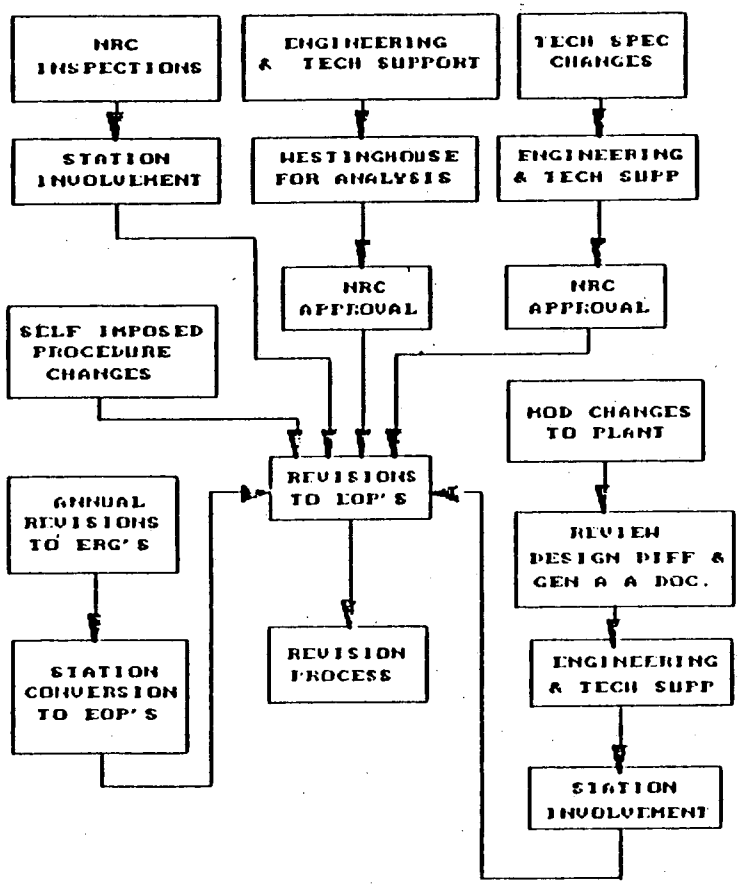

REVISION PROCESS

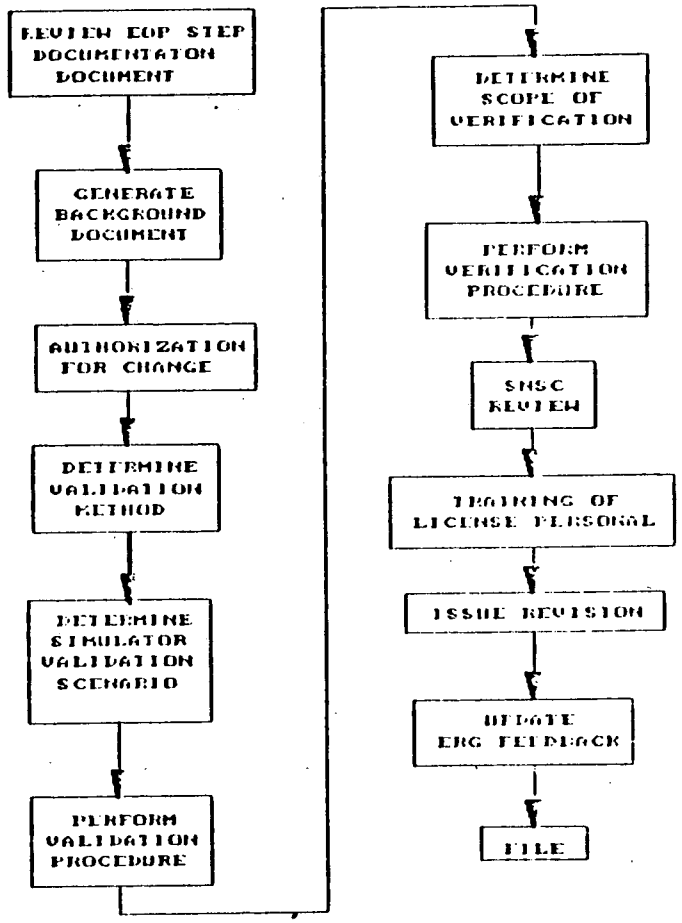

EMERGENCY OPERATING PROCEDURES CHANGE REQUEST FORM

Procedure _____ Page _____ Step Number _____

Change:

Reason:

Background documentation:

Authorization to make revision

_____ Date _____
Operations Manager

Background document updated Date _____

EOP step documentation updated Date _____

Design difference and generic analysis applicability

Document updated Date _____

New validation and verification completed Date _____

SNSC review completed Date _____

Procedure change issued Date _____

Necessary items submitted to ERG maintenance program Date _____

Changes entered into operator feedback system Date _____

Changes submitted to training and included into training program Date _____

Change process and documentation audited

_____ Date _____
Generation Support Manager

Attachment 10

Generation Support Administrative Directive - 4; EOP Writers Guide

Consolidated Edison Company of New York, Inc.
Indian Point Unit No. 2
February , 1987

INDIAN POINT STATION

Generation Support Section

GENERATION SUPPORT ADMINISTRATIVE DIRECTIVE 4 REV. 0

EMERGENCY OPERATING PROCEDURES WRITERS GUIDE

R. N. Ledding
Written by

Frank A. Spagnuolo
Reviewed by

Motoharu Imai / for L. Liberatori
Concurrence by
General Manager / Section Head

Alice Hayes #1074, 2/3/87
SNSC Review Mtg. No. / Date

Joseph Bolan 2/3/87
Approved by / Date

Effective Date

Q.A. Program Document

TABLE OF CONTENTS

Section		Page
1	PURPOSE AND SCOPE	1
2	EOP ADMINISTRATIVE CONTROLS	1
3	FORMAT	1
3.1	Procedure Organization	1
3.2	Procedure Numbering	1
3.3	Page Formats	2
3.4	Instruction Step Numbering	3
4	WRITING THE PROCEDURE	3
4.1	Cover Sheet	3
4.2	Operator Actions	3
4.2.1	Instruction Steps, Left-Hand Column	4
4.2.2	Instruction Steps, Right-Hand Column	5
4.2.3	Use of Logic Terms	5
4.2.4	Notes and Cautions	6
4.2.5	Transitions to Other Procedures or Steps	7
4.2.6	Component Identification	7
4.2.7	Level of Detail	8
4.3	Foldout Page	8
4.4	Revision Index	8
4.5	Tables	9
5	STATUS TREE FORMAT	9
6	MECHANICS OF STYLE	9
Table 1	Definitions of Letter Designators for ERPs	15
Table 2	Abbreviations Used in Emergency Procedures	16
Table 3	Action Verbs	18
Figure 1	Page Format	21
Figure 2	Pre-printed Page (2-Column) Format	22
Figure 3	Cover Sheet Example for E-0	23
Figure 4	Cover Sheet Example for ECA-3	24
Figure 5	Instruction Steps Example	25
Figure 6	Example Foldout Page Format	26
Figure 7	Scheme of Line Pattern Coding Used to Identify Priorities	27

EMERGENCY OPERATING PROCEDURES MAINTENANCE PROGRAM

1 PURPOSE AND SCOPE

The purpose of this document is to provide administrative and technical guidance on the preparation of revisions to the Emergency Operating Procedures (EOP).

2 EOP ADMINISTRATIVE CONTROLS

Revision of Emergency Operating Procedures is controlled by GSAD 3.

3 FORMAT

The following format is to be applied consistently to all Emergency Response Procedures.

3.1 Procedure Organization

All Optimal Recovery Procedures (E, ES, ECA) have three (3) sections. The Cover Sheet summarizes procedure intent and states either entry symptoms or means of entry. The Operator Actions comprise the bulk of each procedure and present the actual stepwise guidance. A Foldout Page summarizes information which is continually required for operator guidance. A single Foldout Page is used for each E-series and ECA-series. (See Table 1 for Procedure definition.)

The Function Restoration Procedures has only the Cover Sheet and Operator Actions.

3.2 Procedure Numbering

Every separate procedure has its own alpha-numeric designation to supplement the descriptive title. Alpha designators are assigned according to the definitions provided in Table 1.

Numeric designators are assigned sequentially in order of procedure development. Each "ES" numeric consist of the number designator of the reference "E" procedure, plus a decimal integer, again assigned sequentially.

"ECA" procedures each have a number designator, and related sub-procedures are assigned additional decimal integers.

Alpha and numeric designators are separated by a hyphen.

Examples: E-0 (Zero designates the diagnostic procedure)
ES-1.1
ES-1.2
ES-1.3
ECA-1
ECA-1.1

Function Restoration Procedures are designated by the letters FR plus an additional letter which corresponds to the respective Critical Safety Function. All the separate procedures related to a particular Safety Function are assigned decimal numbers in increasing order. Typically, the first (number .1) procedure for each safety function corresponds to the RED condition.

The procedure letter and decimal number are separated from the FR designator by a hyphen.

Examples: FR-S.1
FR-S.2
FR-0.1 (Zero designates the diagnostic, status tree procedure)

3.3 Page Formats

All pages of the Emergency Response Procedures use the same page structure except the Foldout Page which is discussed below. This page structure employs a word processor and bordered page to assure all margins are correctly maintained and designator boxes and page cues to assure completeness and consistency. (See Figure 1).

The pages for presentation of operator action steps use a two-column format within the pre-designated page border. The left-hand column is designated for operator actions, and the right-hand column is designated for contingency actions when the expected response is not obtained. These pages use predesignated title blocks above the separate columns (including the "step" column) for uniformity (see Figure 2).

The Foldout Page does not use the same page format. It is intended to summarize only that information which an operator should have continuously available, so page content will vary by procedure. Each Foldout Page shall be titled at the top in large bold type "FOLDOUT FOR E-X PROCEDURES".

3.4 Instruction Step Numbering

Procedure steps are numbered as follows:

1. High-level step (number with arabic numerals)

   a. Substep

      Substeps are lettered with small case letters sequentially according to expected order of performance. If the order of substep performance is not important, then the substeps are designated by bullets (o).

      This same numbering scheme is used in both the right and left columns of the procedures.

2. Continuing action steps are marked with an asterick (*).

4 WRITING THE PROCEDURE

The following format is to be applied consistently when revising Emergency Operating Procedures.

4.1 Cover Sheet

Each cover sheet contains two explanatory sections in addition to procedure and page designators. The first is titled "PURPOSE" and will briefly describe what the procedure is intended to do for the operator. The second section is a summary of those symptoms which require entry into the procedure. This section is titled "SYMPTOMS OR ENTRY CONDITIONS". Certain procedures such as E-0 and ECA-2 can be entered purely based on symptoms; for these procedures, a symptom summary is sufficient (see Figure 3). For other procedures, which can only be entered by transition from previous procedures, a summary of the entry conditions (and procedure/step) should be provided (see Figure 4).

4.2 Operator Actions

Steps directing operator action should be written in short and precise language. The statement should present exactly the task which the operator is to perform. The equipment to be operated should be specifically identified, and only these plant parameters should be specified which are presented by instrumentation available in the control room. (If possible, use of qualified instruments is preferred). It is not necessary to state expected results of routine tasks.

All numbered steps are assumed to be performed in sequence unless stated otherwise in a preceding NOTE (see Section 4.2.4). To keep the individual steps limited to a single action, or a small number of related actions, any complex evolution should be broken down into composite parts.

Actions required in a particular step should not be expected to be complete before the next step is begun. If assigned tasks are short, then the expected action will probably be completed prior to continuing. However, if an assigned task is very lengthy, additional steps may be performed prior to completion. If a particular task must be completed prior to continuation, this condition must be stated clearly in that step or substep.

Refer to Figure 5 as an example of the format for presenting operator actions in the following sections.

4.2.1 INSTRUCTION STEPS, LEFT-HAND COLUMN

The left-hand column of the two-column format is used for operator instruction steps and expected responses. The following rules of construction apply:

High level step will be underlined.

Expected responses to operator actions are shown in ALL CAPITAL LETTERS.

If a step requires multiple substeps, then each substep will have its own expected response.

If only a single task is required by the step, then the high level step contains it's own EXPECTED RESPONSE.

Left-hand column tasks should be specified in sequence as if they could be performed in that manner. The user would normally move down the left hand column when the expected response to a particular step is obtained.

When the expected response is not obtained, the user is expected to move to the right-hand column for contingency instructions.

All emergency procedures should end with a transition to either another emergency procedure or to some normal plant procedure.

When a step is too large to fit on one and is continued on the next page, the following will appear on the bottom of the page:

This step continued on the next page.

4.2.2 INSTRUCTION STEPS, RIGHT-HAND COLUMN

The right-hand column is used to present contingency actions which are to be taken in the event that a stated condition, event, or task in the left-hand column does not represent or achieve the expected result. Contingency actions will be specified for all steps or substeps for which the task requirement might not be satisfied. The following rules apply to the right-hand column:

Contingency actions should identify directions to override automatic controls and to initiate manually what is normally initiated automatically.

Contingency actions should be numbered consistently with the expected response/action for substeps only. A contingency for a single-task high-level step should not be a separately numbered but should appear on the same line as its related step.

The user is expected to proceed to the next numbered step or substep in the left-hand column after taking the contingency action in the right-hand column.

As a general rule, all contingent transitions to other procedures take place out of the right-hand column. (Pre-planned transitions may be made from the left-hand column.)

If a contingency action cannot be completed, the user is expected to proceed to the next step or substep in the left-hand column unless specifically instructed otherwise. When revising the procedure, this rule of usage should be considered in wording subsequent left-hand column instructions.

If a contingency action must be completed prior to continuing, that instruction must appear explicitly in the right-hand column substep.

4.2.3 USE OF LOGIC TERMS

The logic terms AND, OR, NOT, IF, IF NOT, WHEN, and THEN, are used to describe precisely a set of conditions or a sequence of actions. Logic terms will be highlighted for emphasis by capitalizing and underlining. (See Figure 5.)

The two-column format equates to the following logic: IF NOT the expected response in the left-hand column, THEN perform the contingency action in the right-hand column. The logic terms should not be repeated in the right-hand column.

When action steps are contingent upon certain conditions, the step shall begin with the words IF or WHEN followed by a description of those conditions, a comma, the word THEN, and the action to be taken.

IF is used for an unexpected, but possible conditions.

WHEN is used for an expected condition.

AND calls attention to combinations of conditions and shall be placed between each condition. If more than three conditions are to be combined, a list format is preferred.

OR implies alternative combinations or conditions. OR means either one, or the other, or both (inclusive).

IF NOT should be used when an operator must respond to the second of two possible conditions. IF should always be used to specify the first condition. (The right-hand column of the two-column format contains an implicit IF NOT.)

4.2.4 NOTES AND CAUTIONS

Because the present action-step wording is reduced to the minimum essential, certain additional information is sometimes desired, or necessary, and cannot be merely included in a background document. This non-action information is presented as either a NOTE or a CAUTION. (See Figure 5.)

To distinguish this information from action steps, it extends across the entire page and immediately precedes the step to which it applies. Each category (NOTE or CAUTION) is preceded by its descriptor in large, bold letters. Multiple statements included under a single descriptor heading are separately identified by noting them with bullets (o).

CAUTION denotes some potential hazard to personnel or equipment associated with the following instructional step.

NOTE is used to present advisory or administrative information necessary to support the following action instruction.

As a general rule, neither a CAUTION or NOTE is used to replace an instruction/operation action step. However, procedure transitions can be included as non-action information in a NOTE when absolutely necessary.

Each CAUTION or NOTE should be wholly contained on a single page.

4.2.5 TRANSITIONS TO OTHER PROCEDURES OR STEPS

Normally procedures outside the framework of EOPs (SOPs) will be referenced by number and name except in cases were only a few steps are needed, and it is less time consuming to have the steps within the EOP.

Certain conditions require use of a different procedure or step sequence. Transitions are specified by using the words "go to" followed by the procedure designator, title (in CAPITAL LETTERS) and step number.

Example: Go to ES-0.2, REACTOR TRIP RESPONSE, Step 1.

Transitions to a different step in the same procedure are specified in a similar manner.

Example: Go to Step 20.

4.2.6 COMPONENT IDENTIFICATION

Equipment, controls and displays is identified in "operator language" terms. Standard abbreviations which may be used throughout the procedures are listed alphabetically in Table 2.

4.2.7 LEVEL OF DETAIL

To allow an operator to efficiently execute the action steps in a procedure, all unnecessary detail must be removed. Any information which an operator is expected to know (based on his training and experience) should not be included. Many actuation devices (switches) in the control room are similar, even though the remotely performed functions are not, so certain action verbs listed here are recommended.

1 Use "start/stop" for power-driven rotating equipment.

2 Use "open/close/throttle" for valves.

3 Use "trip/close" for electrical breakers. (LOCK OUT for breaker switches with a pull-to-lock feature.)

4 Use "place in standby" to refer to equipment when actuation is to be controlled by automatic logic circuitry.

4.3 Foldout Page

Only a single foldout page, as defined in background document, is supplied for each "E-series" and "ECA-series" of procedures. The sheet is numbered as the final page of the last procedure in the series. (That procedure will still be captioned with "END" after the last instruction step.) The foldout page is titled "FOLDOUT FOR EX SERIES PROCEDURES", (see Figure 6) and uses a single column format (vs. two-column).

Each set of operator information is numbered sequentially and has an explanatory title. The title is capitalized and underlined for emphasis.

Previously supplied guidance on writing instructional steps is applicable (Section 4.2), with the exception of right-hand column (contingency) instructions.

Tabs will be added to fold out pages for ease of finding them.

4.4 Revision Index

4.4.1 A summary of all page revisions will be inserted next to the EOP cover sheet.

4.4.2 Use side bar to indicate a change.

1 Place the bar vertical in the right margin adjacent to the change.

2 Add revision number next to the side bar.

4.5 Tables

4.5.1 All figures and tables should be uniquely identified and located at the end of the procedure to which they pertain.

4.5.2 All figures and tables should contain only information that is relevant to that in the text.

5 STATUS TREE FORMAT

Critical Safety Function Status Trees will be presented in "branch" format (see Figure 8).

Color-coding and line-pattern coding shall both be used from the last branch points to the termini. (See Figure 8 for line-pattern coding only and OAD 26 for color.)

All text on the Status Trees shall be at least as legible (type size and spacing) as the instruction steps in the procedures.

Each status tree shall have a designator block identical to that used in the standard procedure format, and containing the same information.

6 MECHANICS OF STYLE

6.1 Spelling

Use spelling consistent with modern usage. When a choice of spelling is offered by a dictionary, use the first spelling.

6.2 Hyphenation

Use hypens between elements of a compound word when common usage calls for it. Use hyphens in the following circumstances:

1 In compound numerals from twenty-one to ninety-nine. Example: one hundred thirty-four.

2 In fractions. Examples: one-half, two-thirds.

3 In compounds with self. Examples: self-contained self-lubricated.

4 Where the first member of the compound word ends in the same vowel that the second member begins with. As an alternative, two words may be used. Examples: fire-escape or fire escape.

5 Where misleading or awkward consonants would result by joining the words. Example: bell-like.

6 To avoid confusion with another word. Examples: re-cover to prevent confusion with recover, pre-position to avoid confusion with preposition.

7 Where a letter is linked with a noun. Examples: X-ray, O-ring, U-bolt, I-beam.

8 To separate chemical elements and their atomic weight. Examples: Uranium-235, U-235.

9 Where multiplication of units is indicated. Example: ft-lbs.

6.3 Punctuation

Use punctuation only as necessary to aid reading and to prevent misunderstanding. Select the word order to require a minimum of punctuation. When extensive punctuation is necessary for clarity, make several sentences instead. Use punctuation in accordance with the following guidance:

6.3.1 PERIOD

Use a period at the end of complete sentences and for indicating the decimal place in numbers.

6.3.2 COMMA

Use commas for the following:

1 To separate four or more digits. Examples: 14,500; 1,600,000.

2 After introductory phrases or conditional clauses for clarity or ease of reading. Examples: When level decreases to 60 inches, start pump ...

6.3.3 SEMICOLON

Favor periods and commas over semicolons. Do not use semicolons where common usage calls for colons. Use semicolons to set off independent clauses and a run-on listing when such clauses or listings are internally punctuated with commas.

6.3.4 COLON

Use a colon to indicate that something is to follow. For example: Restore cooling flow as follows:

6.3.5 PARENTHESES

Minimize the use of parenthetical statements. Use parentheses when including equipment numbers in a procedural step for separation.

6.3.6 BRACKETS

Avoid using brackets if possible. Use brackets only when necessary for clarity and to enclose statements containing parenthesis.

6.3.7 APOSTROPHE

Use an apostrophe to indicate possessive forms of nouns. For example, The Senior Watch Supervisor's office ... Do not use an apostrophe to indicate plural of acronyms. For example, SOPs, ARPs.

6.3.8 QUOTATION MARKS

Generally, use of quotation marks should be avoided. Permissible uses of quotations marks are as follows:

1 First use of a common usage or figurative language.

2 Special usage of terms in instructions.

Example: Announce "Reactor is critical".

6.3.9 SLANT LINE

Use a slant line as a substitute for "per" in units of measure. Example: ft/sec, lbs/hr.

6.3.10 DEGREE SIGN

Do not use a degree sign between a temperature and the scale.

Example: Use 525F instead of 525°F.

6.4 Vocabulary

Use words readily understandable to the trained person. Use the following guidelines:

6.4.1 Use simple, common words of few syllables.

6.4.2 Use the most common usage of words.

6.4.3 Use words which are concrete rather than vague, specific rather than general, familiar rather than formal, precise rather than blanket.

6.4.4 Define key words that may be understood in more than one sense.

6.4.5 The following common terminology should be used when referring to plant parameters or conditions.

1 Use "High" or "Low" instead of "Up-Scale" or "Down-Scale" when referring to channel failure position. This allows for partial channel failures.

2 Use "T AVG" to refer to average reactor coolant temperature.

3 Use "T REF" to refer to reference reactor coolant temperature.

4 Use "Delta-T" to refer to hot leg to cold leg temperature difference.

5 Do NOT use "trip unit" when "trip Reactor" or "trip Turbine" is intended. IF both trips are intended, state each separately.

6.4.6 Use verbs with specific meaning. Examples are listed in Table 3.

6.4.7 Equipment status will be denoted as follows:

1 Operable/operability: definition from Technical Specification 1.3.

2 Operating: This word means that a system, subsystem, train, component, or device is in operation and is performing its specified function(s), and that a "holdoff" or other conditions do not prevent it from maintaining that service.

3 Available: This word means that a system, subsystem, train, component, or device is capable of being operated and can be used as desired. It need not, however, be operating and it need not be capable of automatic initiation.

6.4.8 Component status will be denoted as follows:

1 In Service: This means that the component is operating and performing its intended function.

2 Out of Service: This means that the component is not capable of performing its intended function.

3 Secured: This means that the component is capable of performing its intended function and is not operating.

4 Running/Shutdown: This refers to the condition of rotating equipment.

5 On Line/Off Line: This means that a generating unit is or is not tied into the power grid.

6 On/Off: This is used for simple equipment such as recorders and lights. It means that the equipment is or is not powered.

7 Racked In/Racked Out: This is used for physical status of switchgear. It means that the switchgear is available or not available to equipment supplied.

8 Energized/De-energized: This should be used to indicate status of elecrical circuits, such as logic circuits and electrical buses. It means that the circuit is or is not powered.

6.4.9 Avoid blanket words unless the absolute meaning is actually desired. All-inclusive words include never, all, always, every, and none.

6.4.10 State acceptance criteria in specific terms. Avoid stating such criteria merely as satisfactory, normal, or adequate. Where acceptance criteria must be vased on subjective evaluation, state the criteria in descriptive phrases which convey specific meaning.

6.4.11 Certain other words are to be avoided simply because they are not adequately defined when used without modification. These include: approximately, rapidly, slowly and normal. The same words become acceptable when some clarification is provided.

Example: Rapidly (up to 200F/HR) cool down the RCS.

6.4.12 Inequalities are expressed in words rather than symbols: i.e., "greater than" and "less than". These words are always appropriate for comparing pressures, temperatures, levels and flow rates. The words "above" and "below" should not be used in this context.

Abbreviations and acronyms from Table 2 will be uniformly capitalized whenever they are used.

6.5 Units of Measure

Use units of measure consistent with the United States National Bureau of Standards (NBS) definitions.

Provide the units of measurement for numerical values which represent measurement data or calculational results in procedural text, figures, tables, and attachments.

TABLE 1

DEFINITIONS OF LETTER DESIGNATORS FOR EOPs

Optimal Recovery Procedure

E - a procedure for diagnosis or mitigation of design basis events.

ES - a procedure which supplements the actions of an "E" procedure.

ECA - a procedure containing tasks for mitigation of events significantly beyond the design basis that are not easily covered in the E's or ES's or which may complicate or reduce the effectiveness of the E procedures if included therein.

Function Restoration Procedure

FR - a procedure to address or respond to a challenge to a Single Critical Safety Function (CSF).

S - designator for SUBCRITICALITY CSF

C - designator for CORE COOLING CSF

P - designator for INTEGRITY CSF

H - designator for HEAT SINK CSF

Z - designator for CONTAINMENT CSF

I - designator for INVENTORY CSF

TABLE 2

ABBREVIATIONS USED IN EMERGENCY PROCEDURES

ac	-	alternating current (electrical power)
ACC	-	auxiliary component cooling
AFW	-	auxiliary feedwater
ATWS	-	anticipated transient without scram
BAST	-	boric acid (storage) tank
BIT	-	boron injection tank
BKR	-	breaker
BU	-	backup
CCW	-	component cooling water
CRDM	-	control rod drive mechanism
CST	-	condensate storage tank
CVCS	-	chemical and volume control system
dc	-	direct current (electrical power and signals)
EOP	-	emergency operating procedures
F	-	degrees fahrenheit
FCU	-	fan cooler unit
FCV	-	flow control valve
FW	-	feed water
GPM	-	gallons per minute
H_2	-	hydrogen
HCV	-	hand control valve
HX	-	heat exchanger
IVSW	-	isolation valve seal water
KV	-	kilo volts
KW	-	kilo watts
LOCA	-	loss of coolant accident
MCC	-	motor control center
MOV	-	motor operated valve
MSIV	-	main steamline isolation valve
NR	-	narrow range (level indication)
O_2	-	oxygen
PAB	-	primary auxiliary building
PCV	-	pressure control valve
POP	-	plant operating procedure
PORV	-	power operated relief valve
PRT	-	pressurizer relief tank
PRZR	-	pressurizer
PSIG	-	pounds per square in gauge
RCDT	-	reactor coolant drain tank
RCP	-	reactor coolant pump
RCS	-	reactor coolant system
RHR	-	residual heat removal
RTD	-	resistance temperature detector
RWST	-	refueling water storage tank
RVLIS	-	reactor vessel liquid inventory system

TABLE 2 (cont'd)

ABBREVIATIONS USED IN EMERGENCY PROCEDURES

SI	-	safety injection
SG	-	steam generator
SGTR	-	steam generator tube rupture
SOP	-	system operating procedure
SOV	-	solenoid operated valve
SJAE	-	steam jet air ejector
SUR	-	startup rate
TAVE	-	temperature average
TC	-	thermocouple
VCT	-	volume control tank
WDS	-	waste disposal system
WR	-	wide range (level indication)

TABLE 3

ACTION VERBS

Verb	Application
Adjust	To change a specified feature so that a specified parameter meets a specified value. Example: Adjust voltage control so output is 18 to 22 volts as indicated on ...
Align	To arrange a series of components into a desired configuration. Example: Align system for normal charging.
Allow	To permit a stated condition to be achieved prior to proceeding. Example: Allow discharge pressure to stablilize.
Begin	To start a process.
Block	To inhibit an automatic actuation. Example: Block SI actuation.
Check	To note a condition and compare with a specified procedure requirement. Example: Check Pressurizer level - GREATER THAN 20 percent.
Close	To change the physical position of a mechanical device. Closing a valve prevents fluid flow. Closing a breaker allows electrical current flow.
Complete	To accomplish specified procedure requirements.
Control	To manually operate equipment as necessary to satisfy procedure requirements. Example: Control Pressurizer level.
Ensure	To make certain that a piece of equipment or control is in a specified state. If it is not in the specified state, existing state will be changed to that specified. Example: Ensure Valve V-10 is open. Ensure Charging Pump 21 is running.

TABLE 3 (cont'd)

ACTION VERBS

Verb	Application
Establish	To make arrangements for stated condition. Example: Establish normal pressurizer pressure and level control.
Hold	To retain a control in a specified position until a specified response occurs. Using hold requires that both control position and response allowing release be specified. Example: Press and hold start switch until flow is established.
Initiate	To begin a process (Begin is preferred).
Inspect	To measure, observe, or evaluate a feature or characteristic for comparison with specified limits; method of inspection should be included. Example: Visually inspect for leaks.
Maintain	To control a given plant parameter to some guideline requirement continuously. Example: Maintain steam generator level in narrow range.
Monitor	Similar to check, except it implies a repeated function.
Observe	1. To watch systematically a specified parameter. Example: Observe all steam generator level channel indicators. 2. To adhere to a specified limit. Example: Observe following heatup limits.
Open	To change the physical position of a mechanical device to the unobstructed position. Opening a valve permits fluid flow. Opening an electrical breaker prevents current flow.
Place	To direct the movement of a control switch to a specified position. Example: Place trip bistable switch to TRIP.

TABLE 3 (cont'd)

ACTION VERBS

Verb	Application
Press	To direct the movement of a control switch to the inward position. Example: Press start switch.
Record	To document specified characteristic. Example: Record RCS average temperature.
Set	To put a specified feature to a specified value. Example: Set voltage control at 20 volts.
Start	To originate motion of an electrical or mechanical device either directly or by remote control. Example: Start one RCP.
Stop	To terminate motion of an electrical or mechanical device. Example: Stop both diesels.
Synchronize	To ensure that the phase rotation, frequency and voltage magnitude of two circuits are the same and then to connect the two circuits.
Throttle	To operate a valve in an intermediate position to obtain a certain flow rate. Examples: Transfer pressure control from manual to auto. Transfer bubble from nitrogen to steam. Transfer bus 5A from station service to 21 D/G.
Trip	To manually activate a semi-automatic feature. Commonly, trip is used to refer to component de-activation. Examples: Trip Reactor; trip Turbine. Trip breaker.
Vent	To permit a gas or liquid confined under pressure to escape at a vent. Example: Vent pump
Verify	To make certain that a piece of equipment, control or parameter is in a specified state. It is not in the specified state, the change of the existing state will be dependent upon subsequent steps. Example: Verify flow in safety injection headers. <u>IF</u> no flow exists <u>THEN</u> ...

Number:	Title:	Revision 1

FIGURE 1
PAGE FORMAT

Number:	Title:	Revision 1

STEP	ACTION/EXPECTED RESPONSE	RESPONSE NOT OBTAINED

FIGURE 2
PRE-PRINTED PAGE (2-COLUMN) FORMAT

Number:	Title:	Revision 1
E-0	REACTOR TRIP OR SAFETY INJECTION	

EMERGENCY INSTRUCTION E-0
REACTOR TRIP OR SAFETY INJECTION

A. PURPOSE

Purpose of this guideline is to verify proper response of automatic protection systems following manual or automatic actuation of REACTOR TRIP or SAFETY INJECTION, to assess plant conditions, and to identify appropriate recovery guideline.

B. SYMPTOMS

I. Following are symptoms of Reactor trip:

a. Any Reactor trip annunciator lit
b. Rapid decrease in neutron level indicated by nuclear instrumentation
c. All shutdown and control rods are fully inserted. Rod bottom lights are lit
d. Rapid decrease in unit load to zero power

II. Following are symptoms of Reactor trip and safety injection:

a. Any SI annunciator lit
b. SI pumps in service
c. (Enter other plant specific symptoms)

FIGURE 3
COVER SHEET EXAMPLE FOR E-0

Number:	Title:	Revision 1
ECA-3	SGTR CONTINGENCIES	

A. PURPOSE

The purpose of this guideline is to provide recovery from transients for which E-3, Steam Generator Tube Rupture, and ES-3.3, SGTR With Secondary Depressurization are not applicable.

B. SYMPTOMS OR ENTRY CONDITIONS

The symptoms required for the use of this guideline may occur at many times during the E-3 and ES-3.3 recovery actions. The symptoms are included in steps 11, 13, 15 and 16 of E-3, Steam Generator Tube Rupture, and steps 11, 14, 16 and 17 of ES-3.3, SGTR With Secondary Depressurizations.

FIGURE 4
COVER SHEET EXAMPLE FOR ECA-3

Number:	Title:	Revision 1
E-1	LOSS OF REACTOR COOLANT	

STEP	ACTION/EXPECTED RESPONSE	RESPONSE NOT OBTAINED
	NOTE: Foldout page should be open.	
1	Check if RCPs Should be Stopped:	
	a. High-head SI pumps running - CHECK FOR FLOW OR PUMP BREAKER INDICATOR LIGHTS LIT	a. DO NOT STOP RCPs. Go to step 2.
	b. RCS pressure - EQUAL TO OR LESS THAN ___ PSIG	b. DO NOT STOP RCPs. Go to step 2.
2	Check RWST Levels - GREATER THAN __	Go to step 20.
3	Check Containment Sump Levels - INCREASING	Rediagnose event, go to E-0, REACTOR TRIP OR SAFETY INJECTION, STEP 32.
	CAUTION Alternate water sources for AFW pumps will be necessary if CST level is low.	
4	Check Steam Generator Levels:	
	a. Narrow range level - GREATER THAN __%	a. Maintain full AFW flow until narrow range level is greater than __%
	b. Throttle AFW flow to maintain narrow range level at __%	b. IF narrow range level in one steam generator continues to increase, THEN go to E-3, STEAM GENERATOR TUBE RUPTURE, STEP 1.

FIGURE 5
INSTRUCTION STEPS EXAMPLE

FOLDOUT FOR E-2 SERIES GUIDELINES

1 RCP TRIP CRITERIA

. Trip any RCP if component cooling water to that pump is lost.

. Trip all RCPs if BOTH conditions listed below are met:

a. SI is ON.

b. RCS pressure - EQUAL TO OR LESS THAN ___ PSIG.

2 SI REINITIATION CRITERIA FOLLOWING LOSS OF SECONDARY COOLANT

a. Reinitiate SI if ANY ONE of the parameters listed below occurs:

(1) RCS Subcooling - LESS THAN ___ F

(2) Pressurizer level - greater than 20%

3 AFW SUPPLY SWITCHOVER CRITERION

IF CST level less than ___%, THEN switch to alternate AFW water supply.

4 COLD LEG RECIRCULATION SWITCHOVER CRITERION

IF RWST level less than ___%, THEN align SI system for cold leg recirculation per ES-2.2, COLD LEG RECIRCULATION FOLLOWING LOSS OF SECONDARY COOLANT.

FIGURE 6
EXAMPLE FOLDOUT PAGE FORMAT

Number:	Title:	Revision Number:
F-0.1	SUBCRITICALITY	REV. 0

12352-1

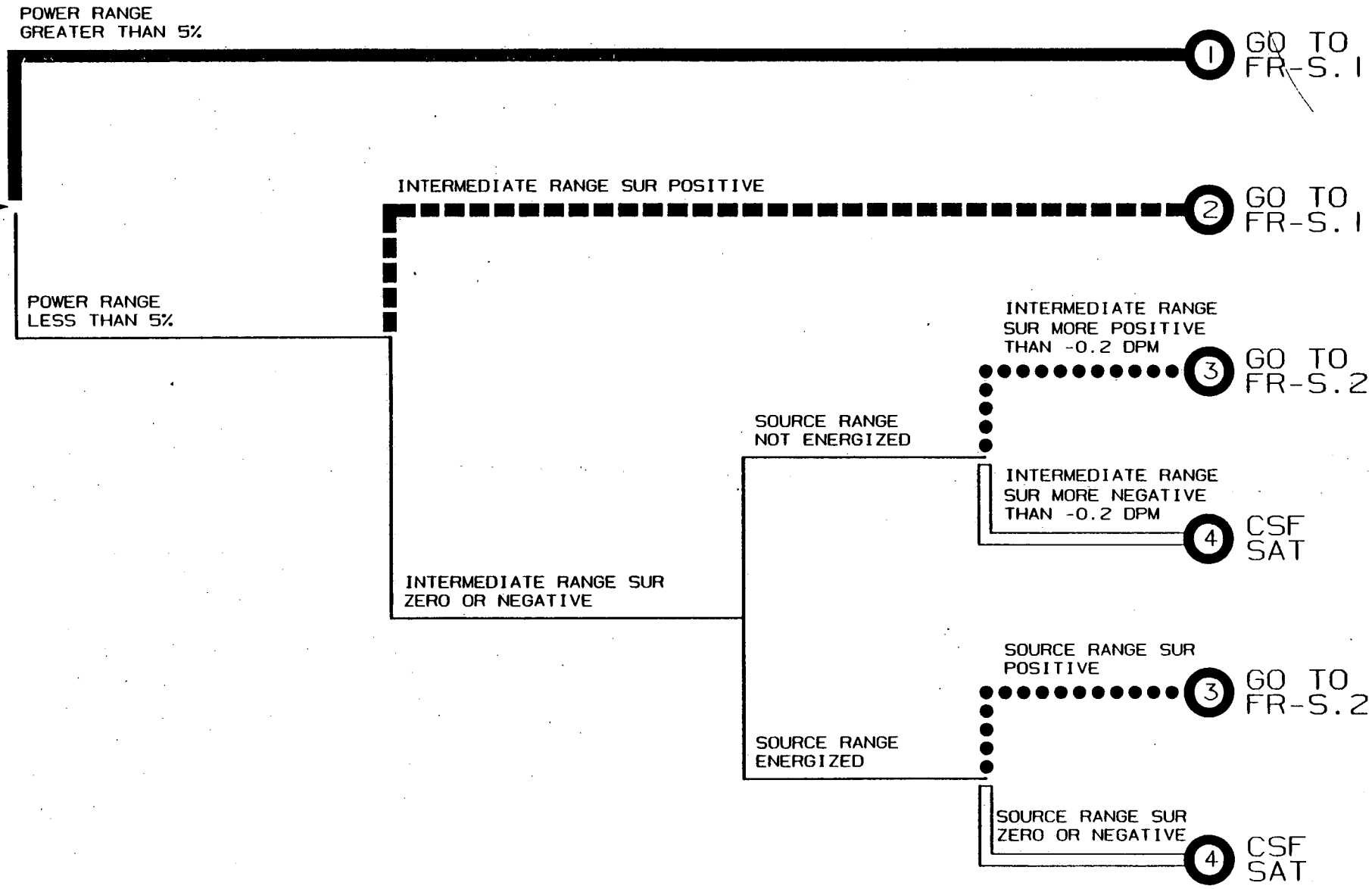

FIGURE 7
SCHEME OF LINE PATTERN CODING USED
TO IDENTIFY PRIORITIES
Page 27 of 27

Attachment 11

Operations Administrative Directive - 26;
EOP Users Guide

Consolidated Edison Company of New York, Inc.
Indian Point Unit No. 2
February , 1987

INDIAN POINT STATION

Operations Section

OPERATIONS ADMINISTRATIVE DIRECTIVE 26 REV. 1

EMERGENCY OPERATING PROCEDURES USERS GUIDE

R N Redding

Written by

Leon A. Ingalls

Reviewed by

Concurrence by
General Manager / Section Head

Alice Hayes #1079 2/3/89

SNSC Review Mtg. No. / Date

2/4/89

Approved by / Date

Effective Date

Q.A. Program Document

1 USERS GUIDE

This document controls the rules of usage of the Emergency Operating Procedures.

2 INTRODUCTION

The Indian Point Unit Two Emergency Operating Procedures (EOPs) were written using the Westinghouse Owners Group (WOG) Emergency Response Guidelines (ERGs) as the technical basis. As in the ERGs, the two column format was used in writing the EOPs. The critical safety function status trees have their own format which also was adapted from the ERG format. The EOPs are intended to direct operator action to the most urgent operational or safety conditions. To accomplish this, rules of priority have been established between the Optimal Recovery Procedures (E set Procedures) and the Function Restoration Procedures (F set Procedures) and rules of usage have been developed which define the intended usage of the two column format and the rules of priority within the EOP's. These rules of usage must be followed to ensure proper application of the EOPs.

3 CONTROL ROOM USAGE OF GUIDELINES

3.1 The Optimal Recovery (E set) Procedures and the Function Restoration (F set) Procedures are both written in similar format, and the rules of usage apply to both.

3.2 Entry into an individual procedure begins at the cover sheet. The title block presents the unique identifiers for each procedure, and the purpose and the symptoms or entry conditions are described in separate paragraphs. Individual operator action steps are presented in the two column format beginning on the following page. Certain special information is also presented, which is emphasized by not following the standard two-column format. This information is of two types:

- o NOTES contain administrative or advisory information which supports operator action.
- o CAUTIONS contain information about potential hazards to personnel or equipment. They also advise on actions or transitions which may become necessary depending on changes in plant conditions.

3.3 Both NOTES and CAUTIONS are introduced by their descriptor, with the text extending across the entire page. If multiple items are included after a descriptor, each item is distinguished by a preceding bullet (o).

3.4 In general, NOTES and CAUTIONs apply to the step which they precede. A NOTE or CAUTION which precedes the first operator action step may also apply to the entire procedure. Two types of NOTES deserve special mention:

1 Several series of E and ECA procedures contain a foldout page. This page presents actions or transitions which are applicable to any step in that series of procedures. Procedures in these series contain a NOTE advising them the foldout page should be open.

2 Several procedures contain steps which are designated as "immediate actions". These steps are intended to be performed, if necessary, without the written procedure being available. These procedures contain a NOTE advising which steps are "immediate action" steps. However, in E-0 , only steps 1 through 3 should be performed by memory, with all remaining steps performed by using the EOP book.

3.5 CAUTIONS apply to the step which they precede and for the rest of the procedure they are in.

3.6 After observing any initial NOTES and/or CAUTIONS, the operator proceeds to the first action step. In the two-column format, each step in the left-hand column contains a high-level statement which describes the task to be performed.

3.7 If the high-level task requires multiple actions, then subtasks are specified. following each task or subtask, the expected response or result is given in CAPITAL LETTERS, separated from the task by a dash.

Example: Check PRZR Level - INCREASING

Example: Check If Any SG Secondary Pressure Boundary Is Faulted:

1 Check pressures in all SGs:

- o ANY SG PRESSURE DECREASING IN AN UNCONTROLLED MANNER

-OR-

- o ANY SG COMPLETELY DEPRESSURIZED

3.8 Expected responses are not supplied for simple control manipulations or actions.

Example: Stop All RCPs

3.9 If sequence of performance is important, then the subtasks are designated by letters (or numbers if finer detail is provided). If sequence of performance is not important, the subtasks are designated by bullets (o).

3.10 Only a limited set of action verbs is used in the action steps. These verbs have specific meanings in the context of their usage in the EOPs.

3.11 Action steps are written so that the operator can normally proceed directly down the left-hand column only. This column contains all the expected conditions, actions, and checks required to accomplish the stated purpose of the procedure.

3.12 If however, the expected result or response is <u>not</u> obtained or the action cannot be performed, the operator should move to the right-hand column for contingency instructions. This column is appropriately titled "RESPONSE NOT OBTAINED". Almost all action steps contain some contingency action statement. If one contingency action is appropriate for any of a series of left-hand column subtasks, it is simply stated once as a high-level contingency. If a contingency is not provided, then the operator should proceed to the next step or substep in the left-hand column.

Example:

Check VCT Makeup Control System:	Adjust controls as necessary.
a Makeup set for greater than RCS boron concentration	
b Makeup set for automatic control	

3.13 The two-column format thus equates to logical terms which would otherwise be specifically stated: <u>IF</u> the conditions required in the left-hand column are not achieved, <u>THEN</u> go to the right-hand column for contingency instructions.

For this reason, the first contingency action does not contain the logic terms IF ... THEN. Subsequent contingency actions are always expressed using the logical construction.

Example:

Verify PRZR level - GREATER THAN (x)%	Control charging flow to maintain PRZR level. IF PRZR level can NOT be maintained, THEN manually operate SI pumps as necessary.

3.14 After taking the contingency action in the right-hand column, the operator should proceed to the next step or substep in the left-hand column. If the contingency action cannot be performed or is not successful, and further contingency instruction is not provided, the operator should again return to the next step or substep in the left-hand column.

3.15 Unless otherwise specified, a required task need not be fully completed before proceeding to the next instruction; it is sufficient to begin a task and have assurance that it is progressing satisfactorily. This ensures efficient implementation where steps are very time consuming. In certain cases, where local operator actions are required (outside the control room), a special NOTE may be added to reinforce this rule of procedure usage.

3.16 If a particular task must be complete prior to proceeding, the step containing the task or an associated NOTE will explicitly state that requirement.

3.17 Transitions to other procedures or to different steps in the same procedure may be made from either column. Such transitions should be made realizing that preceding NOTES or CAUTIONS are applicable. Any tasks still in progress need not be complete prior to making a transition; however, the requirement to complete the tasks is still present and must not be neglected.

3.18 Each procedure ends with either a specific transition to another procedure, if further operator guidance is required, or with the plant being maintained in a steady state condition. Often in the EOPs, the final transition is to "procedure and step in effect". "Step in effect" refers to whichever step was being performed when a symptom-based transition was made into the present procedure.

3.19 As an example, assume an operator is performing procedure A, when symptoms appear requiring transition to procedure B. While performing procedure B, in accordance with a CAUTION, he finds it necessary to go to procedure C. After completing the actions in C, he returns to the procedure and step from which he entered C, that is, back to procedure B. And after completing procedure B, the operator would return to the procedure and step from which he entered B, in this case, procedure A. This example assumes that procedures B and C both end with the transition words "Return To Procedure And Step In Effect".

3.20 Several series of procedures have been provided with a FOLDOUT page. This page is located at the end of the last procedure in a series, and is intended to be available (visible) when any of the procedures in the series is being performed. The FOLDOUT page contains several pieces of information or actions which are applicable <u>at any step</u> in any procedure or procedure series. The most important of these actions are procedure transitions which allow immediate response to new symptoms as they appear. The placement of these transitions on the FOLDOUT page allows prompt response to the appearance of subsequent symptoms.

3.21 In some cases an action step or part of an action step is continuous throughout a procedure or until a particular parameter value occurs. If the number of a step contains an asterisk to the left of it in the EOP, then that step is a continuous action step.

Example:

*2 Check Intact SG levels:

If the continuity of an action applies until some parameter value is met, then that action is typically expressed by means of a WHEN .... THEN ....logic statement.

Example:

Check If Source Range Detectors Should Be Energized:

a	Check intermediate range flux - LESS THAN 10^{-10} AMPS	a	Continue with Step 13. WHEN flux less than 10^{-10} amps, THEN do Steps 12B and c.
b	Verify source range detectors - ENERGIZED	b	Manually energize source range detectors
c	Transfer nuclear recorders to source range scale		

3.22 Location of an operator action is also frequently discriminated by the use of the words "manually and locally". "Manually open a valve" implies to open the valves using a switch in the control room. If it's necessary to exit the control room, then the word "locally" would be used.

4 EXAMPLE OF PROCEDURE USAGE

4.1 The actual process of working through a procedure will be illustrated by using E-2, FAULTED STEAM GENERATOR ISOLATION. It is assumed that the user was directed to Step 1 of this procedure by an instruction in some other procedure.

4.2 The user first verifies the designator and title on the cover sheet to assure himself that he is in the proper procedure. The PURPOSE tells him that his procedure will identify and isolate a faulted steam generator. Examination of the SYMPTOMS OR ENTRY CONDITIONS list should produce the procedure from which the transition to E-2 was made in this case.

4.3 The first action step of this procedure is preceded by two CAUTIONs. Each separate concern is identified by a bullet (o), and the CAUTION identifier is used only once.

4.4 The first CAUTION tells the operator that at least one SG must be maintained available for RCS cooldown.

4.5 The second CAUTION tells the operator that any faulted SG or secondary break shall remain isolated during subsequent recovery actions unless needed for RCS cooldown. Both CAUTIONS refer to the SG isolation which will take place in the next step(s). The operator is expected to know that "faulted" refers to failure of the secondary pressure boundary, and "isolated" refers to closure of the steam and/or feed flow paths. The CAUTIONs have provided a specific criteria (needed for RCS cooldown) for not isolating, or unisolating a faulted SG.

4.6 The first action in Step 1 is a check of the main steam line isolation valves on the affected SGs. The expected condition is that the valves are CLOSED. If, in fact, the operator finds the valves closed by whatever means his training requires, he then proceeds to Step 2. If the valves are not closed, or not closed on all the affected SGs, the operator moves to the right-hand column where a contingency instruction tells him to "Manually close valves". After performing this action, the operator would return to the next task in the left-hand column, in this case Step 2.

4.7 The Step 2 high-level action is to "Check If Any SG Secondary Pressure Boundary Is Intact" with a more detailed subtask describing how this is to be done: the operator is to "check pressures in all SGs". The expected response is "ANY (SG pressure) STABLE OR INCREASING". If any pressure is stable or increasing, the operator proceeds to the Step 3. If none of the steam generators exhibits a stable or increasing pressure, the operator moves to the right-hand column for contingency instructions. He is told, " IF all SG pressures decreasing in an uncontrolled manner, THEN go ECA-2.1, UNCONTROLLED DEPRESSURIZATION OF ALL STEAM GENERATORS, Step 1". In order to perform this step, he has to decide if the depressurization is controlled. If it is not controlled, he will leave E-2 and make the required transition to ECA-2.1. If, however, the pressure decrease is under his control in at least one steam generator, he proceeds to the next left-hand column task, Step 3.

4.8 Step 3 requires the operator to "Identify Faulted SG(s)" and the more detailed process is described in a substep "Check pressures in all SGs". Two possible pressure responses are given which will satisfactorily identify a faulted SG: Any SG PRESSURE (is) DECREASING IN AN UNCONTROLLED MANNER, or ANY SG (is) COMPLETELY DEPRESSURIZED. If either condition is observed, then the intent of the step is satisfied and the faulted SG(s) is (are) identified. The operator moves on to Step 4. If neither condition is observed on any SG, the operator moves to the right-hand column where he is instructed to go to Step 5, i.e., skip over Step 4 since no steam generator is required to be isolated.

4.9 A caution provided before Step 4 warning the operator that he may not be able to locally close the steam supply header valves to the turbine-driven AFW pump if environmental conditions make the valves inaccessible. Step 4 tells the operator to "Isolate Faulted SG(s)" and lists several separate paths which should be isolated. The bullet(o) designator on the separate items implies that the isolations can be done in any order. If the isolations are properly performed, the operator proceeds to Step 5. If some aspect of isolation cannot be completed, he moves to the right-hand column where he is instructed to manually close the valves (from the control room), and if that is not successful, to dispatch or operator to locally close the desired valve(s) or appropriate block valves(s). With the contingency performed or local action initiated, the operator proceeds to Step 5.

4.10 Step 5 simply has the operator check the present level in the condensate storage tank. It is expected to be - GREATER THAN 2 ft. If level is as expected, the operator proceeds to Step 6. However, if level is less than expected, he moves to the right-hand column where he is instructed to "Switch to city water supply." From his training, or from additional information supplied in the plant-specific EOP, he will perform this task and then proceed to the left-hand column of Step 6.

4.11 Step 6 is a check for secondary radiation. Detailed performance of the task is presented in sequential subtasks. First, the operator is to "Request periodic activity samples of all SG(s)". This will involve a call out to a local operator, with attendant time delays for sampling and analysis. By rules of usage, the operator can proceed to the next subtask to "Check main steamline radiation recorder," which he should be able to do from the control room. He then also checks the condenser air ejector radiation recorder and the SG blowdown radiation recorder. The last subtask is the conclusion on the check process, "Secondary radiation - NORMAL". If no abnormal radioactivity is known or detected at that time, the expected response is obtained and the operator proceeds to Step 7. If abnormal radiation is detected on the secondary side of any steam generator, then, by rules of usage, the operator moves to the right-hand column and is instructed to "Go to E-3, ..." and so leaves the E-2 procedure.

4.12 Step 7 directs the operator to "Go to E-1, ..." and thus ends the E-2 procedure with a transition.

4.13 The highlighted word "END" centered on the page emphasizes that the listing of action steps for E-2 is complete.

5 CONTROL ROOM USAGE OF STATUS TREES

5.1 Status Trees are a convenient device used to evaluate the current state of predefined Critical Safety Functions. Status Tree format ask a series of questions about plant conditions, and in general, each question asked depends on the answer to the previous question. This dependency results in a branching pattern, which is referred to as a "tree".

5.2 There are six different trees, each one evaluating a separate safety aspect (Critical Safety Function of the plant. At any given time, a Critical Safety Function status is represented by a single path through its tree. Since each path is unique, it is uniquely labeled at its end point, or terminus. This labeling consists of color-coding and/or line-pattern-coding of the terminus and last branch line, plus a transition to an appropriate procedure if required by that safety status. If the status is normal for a particular Critical Safety Function, no transition is specified, and the condition is clarified by the words CSF SATISFIED.

5.3 Color-coding can be either RED, ORANGE, YELLOW, or GREEN, with GREEN representing a "satisfied" safety status. Each non-green color represents an action level that should be addressed according to the Rules of Priority as discussed below. A number coding is also provided within each terminus with the following equivalencies: 1=Red, 2=Orange, 3=Yellow, 4=Green.

5.4 The six Status Trees are always evaluated in the sequence:

1)	Subcriticality	(S)
2)	Core Cooling	(C)
3)	Heat Sink	(H)
4)	Integrity	(P)
5)	Containment	(Z)
6)	Inventory	(I)

5.5 If identical color priorities are found on different trees during monitoring, the required action priority is determined by this sequence.

5.6 The user begins monitoring with the Subcriticality tree. Entry is at the arrow at the left side of the tree. Questions are answered based on plant conditions at the time, and the appropriate branch line followed to the next question. An individual Status Tree evaluation is complete when the user arrives at a color - (or line-pattern-) coded terminus. With the exceptions noted below, the color and instructions of the terminus are noted (logged) and the user continues to the next tree in sequence, again entering at the left-hand side arrow.

5.7 If any RED terminus is encountered, the operator is required to immediately stop any Optimal Recovery (E Set) Procedure in progress, and to perform the Function Restoration Procedure required by the terminus.

5.8 If during the performance of any RED condition FRP, a RED condition of higher priority condition should be addressed first, and the lower priority RED condition FRP suspended.

5.9 If any ORANGE terminus is encountered, the operator is expected to monitor all of the remaining trees, and then, if no RED is encountered, suspend any E Set Procedure in progress and perform the FRP required by the ORANGE terminus.

5.10 If during the performance of an ORANGE-condition FRP, any RED condition or higher priority ORANGE condition arises, then the RED or higher priority ORANGE condition is to be addressed first, and the original ORANGE-condition FRP suspended.

5.11 Once a FRP is entered due to a RED or ORANGE condition, that FRP is performed to completion, unless preempted by some higher priority condition. It is expected that the actions in the FRP will clear the RED or ORANGE condition before all the operator actions are complete. However, these procedures should be performed to the point of the defined transition to a specific procedure or to the "procedure and step in effect".

5.12 Status Tree monitoring should be continuous if any ORANGE or RED condition is found to exist. If no condition more serious than YELLOW is encountered, monitoring frequency may be reduced to 10-20 minutes, unless some significant change in plant status occurs.

5.13 A YELLOW terminus does not require immediate operator attention. Frequently it is indicative of an off-normal and/or temporary condition which will be restored to normal status by actions already in progress. In other cases, the YELLOW status might provide an early indication of a developing RED or ORANGE condition. Following FRP implementation, a YELLOW might indicate a residual off-normal condition. The operator is allowed to decide whether or not to implement any YELLOW-condition FRP.

5.14 The operator should be familiar with all instrumentation used in the status trees. The only unique application is the use of the core exit thermocouples in the Core Cooling Status Tree, where the average of the 5 highest core exit thermocouple readings should be used to determine the core exit thermocouple value used in the status tree.

6 EXAMPLE OF STATUS TREE USAGE

6.1 The actual process of working through the trees will be illustrated by examining the Status Tree F-0.1, SUBCRITICALITY. The user enters the tree at the left-hand arrow and must determine if the power range (NIS channels) indication is less than or greater than 5%.

6.2 If indicated NIS power is greater than 5%, then the user would follow the path directly to the terminus and determine that:

- o the response priority is RED (immediate response required)
- o the appropriate Function Restoration Procedure is FR-S.1

6.3 According to the Rules of Priority, the operator should suspend whichever ORP or lower priority FRP is being performed and immediately initiate the actions in procedure FR-S.1. Monitoring of the Status Trees may continue for information purposes, but by the Rules of Priority, no other higher priority condition can exist. When the actions required by FR-S.1 are complete, the operator is directed to "return to procedure and step in effect". This allows recovery actions to continue exactly where they were suspended when the RED condition was recognized. This also signals continued monitoring of Status Trees. In this case, the user and/or operator would know, because of the FR-S.1 actions and checks, that the Subcriticality tree would have no status more severe than YELLOW.

6.4 If indicated NIS power is less than 5%, then the user would follow the path to the next set of conditions.

6.5 In this second set, the user is asked whether the intermediate range startup rate is positive or not positive (zero or negative). If the indicated rate is positive, then the user would follow the response path directly to a terminus and determine that:

- o the response priority is ORANGE (prompt response required)
- o the appropriate Function Restoration Procedure is FR-S.1

6.6 According to the Rules of Priority, the remainder of the Status Trees should be monitored to determine if any RED conditions are present. In no RED status is encountered, then any ORANGE conditions would be reviewed for priority. Since Subcriticality is the first Status Tree, the present ORANGE would be addressed first by Rules of Priority. Again the operator would suspend whichever ORP or lower priority FRP was being performed and initiate the actions in procedure FR-S.1. Monitoring of the Status Trees should continue in order to promptly identify any RED conditions which might arise and take priority. When procedure FR-S.1 is completed, the operator can again return to his normal recovery action at the point where it was suspended, unless other ORANGE conditions require attention first. Again, order of tree sequence would determine ORANGE priority.

6.7 If the second condition was "Zero or Negative", the user would follow the path to a third set of conditions.

6.8 This time the question is whether the source range is energized. This can easily be answered by checking the detector high voltage indication. If the source range is determined to be not energized, the user follows the path to another question. Now he is asked if the intermediate range startup rate is more negative than - 0.2 DPM. If the indicated startup rate is between zero and - 0.2 DPM, then the user would follow the path directly to a terminus and find that:

- the response priority is YELLOW (action based on operator judgement)
- the appropriate Function Restoration Procedure is FR-S.2

6.9 Since the status priority is YELLOW, the user would continue to monitor the remaining trees and deal with any RED or ORANGE conditions which might be encountered. If no other condition coded higher than YELLOW was present, then the operator would decide if the FRP should be performed or delayed. Often, a YELLOW is indicative of an off-normal condition which may be restored to normal status by actions already in progress. At other times, the YELLOW status may be indicative of an abnormality in a single RCS loop or a single SG, for example, and may be considered acceptable for the particular transient in progress. Whatever the case, the operator makes the decision about responding to the YELLOW condition.

6.10 If the intermediate range startup rate is more negative than - 0.2 DPM the user would follow the path downward to a terminus and find the condition coded GREEN, and annotated "CSF SAT". The Subcriticality Critical Safety Function is considered satisfied, so the user proceeds to evaluate the next Status Tree in the sequence.

6.11 If the source range was found to be energized, in response to the third question, the user would follow the path downward to another question. This time he is asked if the source range startup rate is positive or not (negative or zero). Since the source range signal is normally erratic, it will be necessary for the user to look at a recorder trend of count rate to properly evaluate the startup rate. If positive, the user would follow the path upward to a terminus and find:

- the response priority is YELLOW (action based on operator judgement)
- the appropriate Function Restoration Procedure is FR-S.2

6.12 The operator would again use his judgement regarding implementation of FR-S.2 while continuing recovery operations and observing the Rules of Priority for the other Status Trees.

6.13 If the source range startup rate is observed to be negative or zero, the user follows the path downward out of the question box and finds the condition coded GREEN, the Critical Safety Function is satisfied. The user would move directly to the next tree in the sequence.

7 CONTROL ROOM USAGE OF THE EOP NETWORK

7.1 While the previous sections discussed the separate usage of an individual procedure and evaluation of Status Trees, this section presents the intended overall usage of the entire EOP network.

7.2 Entry into the Emergency Operating Procedure conditions:

- If at any time a reactor trip or safety injection occurs or is required, the operator will enter procedure E-0, REACTOR TRIP OR SAFETY INJECTION.

- If at any time a complete loss of power on the AC 480 V busses takes place, the operator will enter procedure ECA-0.0, LOSS OF ALL AC POWER. This includes any time during the performance of <u>any</u> other EOP.

7.3 If control room becomes inaccessible then go to A-27.1.9 CONTROL ROOM INACCESSIBILITY SAFE SHUTDOWN CONTROL <u>NOT</u> E-0.

7.4 The entry into E-0 is expected to be the one more frequently used, so it is described first:

7.5 The operator enters at Step 1 and proceeds through E-0, following the rules of procedure usage as described above, with two possible outcomes:

- He remains in E-0 and is directed by an action step to begin monitoring the Status Trees, or

- He transfers to some other procedure, at which point he begins to monitor the Status Trees.

7.6 Monitoring of the Status Trees takes place in accordance with its own rules of usage, in parallel with the recovery actions being performed by the operator. The monitoring may be done directly by one of the operators in the control room, by some other member of the shift assigned to the control room by the STA, or by a dedicated computer routine. The only requirement of the monitoring function is that the operator in charge of recovery actions be immediately informed of RED or ORANGE conditions, and regularly advised of YELLOW and GREEN conditions.

7.7 The ORP actions in progress are suspended if either a RED or ORANGE condition is detected on a Status Tree. ORP actions are not to be performed while a Critical Safety Function is being restored from a RED or ORANGE condition, unless required by the FRP in effect. In this situation, the ORP actions should be performed as if they were part of the RED or ORANGE-condition FRP in effect. An example of such a required action is the transfer of SI pump suction from the RWST to the recirculation sump to maintain cooling flow to the core. In some cases this requirement may not be explicitly stated, but is implied by the need for continued SI pump operation.

7.8 After restoration of any Critical Safety Function from a RED or ORANGE condition, recovery actions may continue when the FRP is complete. Most often, the FRP will return the operator to the suspended ORP. However, at times a FRP will require a transition to a different ORP because of conditions created within the FRP.

7.9 Upon continuation of recovery actions, some judgement is required by the operator to avoid inadvertent reinstatement of a RED or ORANGE condition by undoing some critical step in a Function Restoration Procedure. The plant recovery procedures are optimal assuming that equipment is available as required for safety. The appearance of a RED or ORANGE condition in most cases implies that some equipment or function required for safety is not available, and by implication some adjustment may be required in the recovery procedures.

7.10 An example might be the establishing of an alternate feed path to the steam generators as required by FR-H.1. With feed flow from either the main feed or condensate system, the operator would <u>not</u> want to isolate all main feed lines if required in a subsequent procedure.

7.11 Direct entry into ECA-0.0, due to loss of ac power on all ac 480 V busses, is expected to be a rare occurrence. However, once in ECA-0.0, special considerations come into effect. Because none of the electrically powered safeguards equipment used to restore Critical Safety Functions is operable, none of the FRPs can be implemented. A NOTE at the beginning of procedure ECA-0.0 state.s that "CSF Status Trees should be monitored for information only. FRPs should not be implemented." Once in ECA-0.0, the operator performs the required actions, and is not allowed to transition to any other procedure until some form of power is restored to the AC 480 V busses. Even then, permission is not granted to implement FRPs until some initial status checks and actions are performed by the operator.

7.12 Certain contingency procedures (ECA) take precedence over FRPs because of their treatment of specific initiating events. In all such cases, this precedence is identified in a NOTE at the beginning of the ECA procedures.

7.13 For example, ECA-2.1 deals with depressurization, loss of level, and resultant feed flow reduction to all steam generators. While this condition results in a RED priority on the Heat Sink Status Tree, the referenced procedure, FR-H.1, returns the operator to ECA-2.1 for the preferred treatment of the accident. ECA-2.1 contains an introductory CAUTION stating the specific conditions under which FR-H.1 should be implemented.

7.14 The more dramatic example is ECA-0.0 which is discussed above. This procedure provides the best strategy for maintaining Critical Safety Functions satisfied and protecting barriers until ac 480 V power is restored.

7.15 There is one unique procedure in the E set which has no entry symptoms or transitions. It is used purely as an operator aid and is entered based purely on operator judgement. The procedure is ES-0.0, REDIAGNOSIS. It is intended to be used after departure from E-0, but only if SI has been actuated. It provides reassurance to the operator that he is in the correct Optimal Recovery Procedure, or provides the necessary transition instruction to get to the correct Optimal

Recovery Procedure for the existing symptoms. Anticipated operator need for this rediagnosis procedure is limited in the EOPs, because many of the transitions needed to respond to new symptoms are included on the foldout pages. However, its presence can be reassuring to an operator after making several consecutive transitions due to rapidly changing conditions.

7.16 EOP usage always ends in one of the following ways with plant conditions stable:

- Transition to a plant operating procedure (not an EOP).
- Transition to some "appropriate" plant procedure while on RHR system operation at cold shutdown conditions.
- On RHR System operation at cold shutdown conditions or on either cold leg recirculation or hot leg recirculation with longer term recovery actions being determined by the operations manager.

7.17 Use of the EOPs may also lead to actions which might result in Technical Specification violations in order to maintain plant safety (e.g., maximum cooldown rate in FR-C.1 will violate cooldown rate restrictions but is necessary to restore core cooling and prevent more severe consequences). The actions delineated in the EOPs are those actions necessary to deal with the accident in order to maintain or restore the plant to a safe condition. In general, the Technical Specification were considered in developing the Emergency Response Guidelines on which the Indian Point No. 2 EOPs are based, and more discussion can be found in the Generic Issue Section on Technical Specification Violation in the Executive Volume of the Westinghouse Owners Group Emergency Response Guidelines.

Docket # 50-247
Control # 8703030329
Date 2/11/87 of Document
REGULATORY DOCKET FILE

PART II OF II

PROCEDURES GENERATION PACKAGE. RESOLVES CONCERNS IN SAFETY EVALUATION

ATTACHMENT 1

Response To Draft Safety Evaluation Report

Consolidated Edison Company of New York, Inc.
Indian Point Unit No. 2
February , 1987

The following are the questions/concerns raised in the NRC's September 22, 1986 Draft SER and our response to each.

A. Plant Specific Technical Guidelines (P-STG)

1. Deviations from and additions to the generic technical guidelines should be identified and discussed in the PGP. In addition, analysis or other technical justification supporting the additions and/or deviations that are of safety significance should be provided.

Response:

Deviations from and additions to the ERGs, LP-Rev. 1 are identified and discussed in Attachment 2. These are due to plant design differences and/or analysis differences between IP-2 and the Reference Plant used in developing the ERGs, LP-Rev. 1.

An evaluation of the design differences and generic analysis applicability was conducted to determine what impact, if any, these would have on the IP-2 EOPs. This evaluation is contained in Attachment 3. None of the deviations from or additions to the generic guidelines are safety significant according to the review criteria in SRP 13.5.2 and therefore there were none to provide to the NRC in the PGP. It should be pointed out that since the PGP is prepared prior to the start of actual EOP development (which includes documenting step differences), we do not agree that the differences should be included in the initial PGP but suggest instead that they would be suited for a later update of it.

2. Deviations from and additions to generic technical guidelines should be verified and validated. This verification and validation step can be accomplished separately or as a part of the EOP verification and validation program. The PGP should discuss how the deviations and additions are to be verified and validated.

Response:

Deviations from and additions to the ERGs, LP-Rev. 1 were validated and verified as part of the initial EOP Validation and Verification program. The results of the Validation and Verification program are contained in Attachments 6 and 7, respectively. These results were evaluated and fed back into the draft EOPs, which were then updated prior to the start of Training. Administrative procedures controlling the Validation and Verification process are contained in Attachments 4 and 5 respectively. These Generation Support Administrative Directives merely formalized the procedures used by us and Westinghouse in conducting the initial EOP Validation and Verification program.

3.a IP-2 should describe the process for using the generic guidelines and background documentation to identify the characteristics of needed instrumentation and controls. For the information of this type that is not available from the ERG and background documentation, IP-2

should describe the process to be used to generate this information (e.g., from transient and accident analyses) to derive instrumentation and control characteristics.

Response:

The process for using the generic guidelines and background documentation to identify instrumentation and control characteristics is contained in Attachment 8 along with the process parameter values that were determined and included in the EOPs. Attachment 8 coupled with Attachments 2 and 3 form the process needed to derive instrumentation and control characteristics. Additionally, the DCRDR system function and task analysis utilized the EOPs and the supporting documents contained in Attachments 2,3 and 8 in order to evaluate the information in the control room. As a result of this activity certain upgrades to the control room were committed to in our June 30, 1986 submittal, and the feedback assisted in the development of final EOPs.

3.b. For potentially safety-significant plant-specific deviations from the ERG instrumentation and controls, IP-2 should provide in the PGP a list of the deviations and their justification. These should be submitted in the P-STG, along with other technical deviations.

Response:

Differences between the ERGs, LP-Rev.1 and the IP-2 EOPs are discussed in Attachment 2. As discussed above, none of these differences were determined to be safety significant. ERG instrumentation and controls were used in the EOPs in accordance with the criteria contained in the ERG Executive Volume.

3.c. For each instrument and control used to implement the EOPs, there should be an auditable record of how the needed characteristics of the instruments and controls were determined. These needed characteristics should be derived from the information and control needs identified in the background documentation of Revision 1 of the ERG or from plant-specific information.

Response:

The ERG Executive Volume was followed in implementing the EOPs. As discussed above, Attachments 2,3 and 8 form the key elements of the process used to determine needed characteristics of instruments and controls. The ERG background documents and plant-specific fill-in information were used in the determination of instrumentation and control characteristics. In order to maintain a current record, the key elements of the process described in Attachment 2,3 and 8 will be converted to an administrative procedure(s) and issued by July 31, 1987.

B. Writers Guide

1.a. Since both OAD 7 and Attachment 1 are intended to guide the preparation of emergency procedures, then both documents should provide specific information about the sections of OAD 7 and its Attachment 1 that apply to EOP preparation. Alternatively, the individuals who revise the writer's guide may wish to reorganize and combine OAD 7 and Attachment 1 to improve the usability of the document.

Response:

We recognized that the relationship of OAD 7 and its Attachment 1 were unclear. New Generation Support Administrative Directives (GSAD) were issued to control the EOP Maintenance process and EOP writers guide. These GSADs are contained in Attachments 9 and 10 and have replaced OAD-7.

1.b. OAD 7 contains a statement of commitment to using the writer's guide in developing and revising the EOPs. Attachment 1 does not include such a statement. Further, Section 2 of OAD 7 states that the guidance contained in Sections 9, 10, and 11 of OAD 7 is non-mandatory. It is these sections, however, that contain much of the guidance to procedure writers that is recommended by NUREG-0899. As suggested above, the scope and applicability of OAD-7 and Attachment 1 should be clarified.

Response:

GSAD-4 contained in Attachment 10 provides the necessary guidance to procedure writers. This has replaced OAD-7.

2. Operators should be able to know if the procedure they are using is the correct procedure for their unit at multiunit sites. Section 5 of OAD 7 requires that the unit and facility to which each procedure applies be noted on the cover sheet of each procedure. OAD 7 does not specify that this information should be noted on each subsequent page of the procedure. Attachment 1 does not refer to the need for this information at all on either the cover sheets or subsequent pages of the EOPs. To assist operators in assuring that they are using the appropriate procedure, OAD 7 should be revised to instruct that each page of the EOPs should contain sufficient information to identify the EOP, its currentness, how many pages it contains, and the unit to which it applies. Figures 3, 4 and 5 of Attachment 1 should be modified accordingly.

Response:

Con Edison has only one operating nuclear power plant so EOPs for multiple units is not an issue. Section 3.3 of GSAD-4 contained in Attachment 10 contains the instructions covering the necessary information to include on each EOP page.

3. Providing a table of contents is a useful technique for assisting users to find information within a procedure. Both OAD 7 and its Attachment 1 include tables of contents, but neither of them specify the conditions under which a table of contents should be used nor describe the desired format. If tables of contents are to be used to assist operators to locate information in the ERPs, then guidance for constructing them should be provided in the writer's guide.

Response:

Due to the flow of the EOPs, their usage, and being symptom driven, we have concluded that there is no need for a table of contents.

4. Operators should be able to determine easily the section of the procedure in which they are reading. The writer's guide provides two conflicting methods for meeting this goal. Section 6.1 of OAD 7 provides acceptable guidance for numbering paragraphs and steps. The numbering system described in Section 3.3 of Attachment 1, however, does not allow the unique identification of substeps not provide for the differentiation of steps in the left-and-right-hand columns. The writer's guide should endorse use of the system described in OAD 7 for the EOPs.

Response:

Section 3.4 of GSAD-4 contained in Attachment 10 provides the applicable numbering system guidance for EOP writers and has replaced OAD-7. EOP usage is described in Operations Administrative Directive (OAD)-26 contained in Attachment 11 and provides the guidance to operators in how to use the system.

5.a. A description of where the CSFs will be located in the control room and how they will be accessed by operators is needed to ensure that the information the CSFs contain is easily available to operators. See NUREG-0899, Subsection 6.1.2 and 6.1.4, for additional information.

Response:

The EOPs are easily accessible in the control room and are distinguishable in their physical appearance from other procedures. Applicable guidance is provided in Section 2.5.1.7 of GSAD-3 contained in Attachment 9.

5.b. Section 5 of Attachment 1 to OAD 7 states that the CSFs may be presented in either "branch" or "block" format, although all trees within a set of procedures are required to use the same format. One format should be selected and used consistently to ensure readability and the smooth, uninterrupted transition from one procedure to another.

Response:

Currently, the "branch" format has been selected and is used consistently in the EOPs.

5.c. Color-coding and line-pattern coding are helpful techniques for improving the usability of flow charts. To ensure that operators are not confused by the use of inconsistent coding conventions or by inconsistencies in the symbols used for different sets of procedures, the writer's guide should list acceptable codes and symbols and their meanings.

Response:

Codes and symbols are established in the ERGs, LP-Rev. 1 and their usage is covered in Attachment 11.

5.d. Further, Figure 8 of Attachment 1 to OAD 7 does not show any color-coding, with the consequence that information has been lost in reproducing the CSF for inclusion in the writer's guide. To avoid such losses of information, the writer's guide should describe how color-coded CSFs will be produced and reproduced to maintain the color-coding.

Response:

The control room version of the CSF status trees is required to be in color per Section 5 of GSAD-4 contained in Attachment 10.

5.e. The writer's guide does not specify the required size for symbols, lines, and other CSF components. To ensure that the CSF components are legible from the distance at which operators are expected to read them, the writer's guide should specify component sizes or include a full-size copy of a chart to assist procedure writers in producing legible CSF status trees. See NUREG-0899, Section 5.3, for additional information.

Response:

The CSF status trees are legible from the distance at which operators are expected to read them. This was confirmed during the EOP validation and training. GSAD-4 contained in Attachment 10 provides the guidance covering the CSF status trees.

6. When complicated actions are required that divert operators' attention from the procedure, it is important for the

operator to be able to return to the procedure and immediately find the last step that was performed. Attachment 1 does not specify any method of assisting operators to keep track of their places in the EOPs and Figure 5 of Attachment 1 does not show any type of placekeeping aid. Section 8.2 of OAD 7, however, provides a detailed description of the design of checkoffs for placekeeping aids. The guidance provided in OAD 7 for placekeeping aids should be used in preparing EOPs.

Response:

Color page markers are required in the control room version of the EOPs per Section 2.5.1.7 of GSAD-3 contained in Attachment 9.

7. Instructions should be written for various types of action steps that an operator may take to cope with different plant situations. Thus, the writer's guide should address the definition and format of the following types of actions steps:

a. Steps of a continuous or periodic nature.

b. Steps performed concurrently with other steps.
See NUREG-0899, Section 5.7, for additional information

Response:

EOP usage is driven by plant symptoms which direct the flow through the EOPs by their design. OAD-26 contained in Attachment 11 covers EOP usage for continuous and concurrent steps.

8. To minimize confusion, delay, and errors in execution of EOP steps, the following concerns should be addressed in the writer's guide:

a. EOPs should be structured so that they can be executed by the minimum shift staffing and minimum control room staffing required by the Technical Specifications.

b. Instructions for structuring EOPs should be consistent with the roles and responsibilities of the operators.

c. Action steps should be structured to minimize physical conflicts between personnel and to minimize the amount of movement needed for carrying out the steps.

d. The action steps should be structured to avoid unintentional duplication of tasks.

See NUREG-0899, Section 5.8, for additional information.

Response:

The above concerns are covered as described below. These should not be addressed in the writers guide. Training in the EOPs utilizes the minimum staffing required by the Technical Specifications consistent with their roles and responsibilities. Adding this requirement to the writers guide is superfluous. The validation process (and DCRDR SFTA) covered physical movement needed to carry out steps on the simulator and minimized conflicts. This criteria is retained in the EOPs Validation process checklist. To also include this in the writers guide is superfluous.

9. Transitions to other procedures or sections of procedures can be disruptive and cause unnecessary delays. Therefore, in addition to the guidance provided in Subsection 4.2.5 of Attachment 1, the writer's guide should describe the criteria that procedure writers are to use to determine when the steps of a referenced procedure are to be included in the EOP rather than referenced. See NUREG-0899, Subsection 5.2.2, for additional information.

Response:

EOP usage, including transitions, is covered in OAD-26 contained in Attachment 11. Section 4.2.5 of GSAD-4 contained in Attachment 10 describes the guidance for procedures writers to use.

10. Combinations of logic terms in instruction statements can be ambiguous and confusing to operators. Section 8.4 of OAD 7 states that such combinations should be avoided. There are occasions, however, when it is necessary to use AND and OR in the same sentence. The writer's guide should provide guidance and examples of acceptable usage for those situations. See NUREG-0899, Appendix B, for additional information.

Response:

The writer's guide does provide guidance for this. GSAD-4 contained in Attachment 10 has replaced OAD-7.

11. The type of vocabulary used can significantly increase the understandability of procedures. The writer's guide should include lists of words that are specific and acceptable to use, their definitions, and lists of words to avoid in preparing EOPs. See NUREG-0899, Subsection 5.6.1, for additional information.

Response:

This is covered by Tables 1, 2 and 3 of GSAD-4 contained in Attachment 10.

12. The units of measure that are used in the text and to label figures and tables should be those that are familiar to operators and should not require any conversions or mental manipulations. The writer's guide should state that units of measure referenced in EOPs will be those in common usage and will be consistent with the units of measure shown on control room instrumentation.

Response:

The EOP Validation and Verification process assures that units of measure used in the EOPs are consistent. This should not be included in the writers guide since it is covered by the validation and verification criteria. See GSAD-6 and 7 contained in Attachments 4 and 5.

13. Subsection 10.3.2 of OAD 7 prescribes guidance for capitalization and underlining of paragraph headings. Figure 4 of OAD 7 graphically presents instructions on the same topic. This section or figure should be revised to provide consistent information regarding capitalization in third and fourth level headings.

Response:

This revision has been made, refer to GSAD-4 contained in Attachment 10 which has replaced OAD-7.

14. Information should be presented so that interruptions in the flow of information are minimal. The writer's guide should state that each action step and caution should be wholly contained on a single page.

Response:

This is included in GSAD-4 contained in Attachment 10.

15. Caution statements should be emphasized to attract operators' attention. Subsection 10.3.4 of OAD 7 requires that caution statements be enclosed in asterisked boxes to meet this goal and should not extend beyond the margins of the preceding text on the page. Subsection 4.2.4 of Attachment 1, however, does not require that caution statements be enclosed in boxes, and states that cautions should extend across the entire page. Figure 5 of Attachment 1 shows a caution statement without a box. The guidance and examples presented in Attachment 1 should be consistent with the guidance of OAD 7. See NUREG-0899, Subsection 5.5.3, for additional information.

Response:

We agree and had recognized this discrepancy. The appropriate guidance is provided in Section 4.2.4 and Figure 5 of GSAD-4 contained in Attachment 10 which has replaced OAD-7.

16. Figures and tables assist operators to make decisions and to locate information. Sections 10.6 and 10.7 of OAD 7 provide specific guidance for formatting tables and figures. Attachment 1 does not mention them. The writer's guide should state that the guidance in OAD 7 is to be used for EOPs, with the following additions:

    a. All figures and tables should be uniquely identified and located near the text to which they pertain.

    b. All figures and tables should contain only information that is relevant to that in the text.

    Response:

    We agree that figures and tables should be uniquely identified, however we have concluded that it is not essential that they be located near the text to which they pertain. Tables and figures are at the end of the procedure. Refer to Section 4.5 of GSAD-4 contained in Attachment 10 which replaced OAD-7. EOP usage including figures and tables is covered in OAD-26 contained in Attachment 11.

17. Section 10.8 of OAD 7 states that the use of fold-out pages should be avoided if possible. Although no justification is provided for this requirement, the text implies that use of fold-out pages is cumbersome and that the folds are subject to wear that may reduce legibility or lead to tearing. Section 4.3 of Attachment 1, however, requires that fold-out pages be provided for all E-series and ECA-series EOPs. The writer's guide should specify the manner in which the disadvantages of fold-out pages noted in OAD 7 will be overcome for the EOPs.

    Response:

    Fold-out pages are used in the EOPs consistent with the ERGs, LP-Rev. 1. Refer to Section 4.3 of GSAD-4 contained in Attachment 10 which replaced OAD-7.

18. Because they will be used in stressful conditions and under time constraints, EOPs must be easily accessible to operators and should be uniquely identified. The writer's guide should address the accessibility of EOPs and techniques to distinguish them from other plant procedures.

    Response:

    The EOPs are easily accessible to operators and distinguishable from other procedures. Section 2.5.1.7 of GSAD-3 contained in Attachment 9 covers this item.

19. EOPs must be current to be usable. The writer's guide should describe a system for ensuring that the EOPs are updated in a timely fashion when changes occur in plant design, Technical Specifications or Guidelines, in the writer's guide, in the control room, or in other plant procedures that interface with the EOPs. See NUREG-0899, Subsection 6.2.4, for additional information.

Response:

GSAD-3 is the administrative process covering the EOP maintenance process and is contained in Attachment 9. This GSAD has been arranged to keep the EOPs current in a timely manner when changes occur in the plant design, Technical Specifications, writer's guide, other procedures that interface with EOPs, and the generic technical guidelines.

20. Sections 12 and 13 of OAD 7 prescribe the review and approval of procedures and procedure changes. These sections state that the rules governing procedure review and approval are not applicable during emergency situations. This may incorrectly be construed to mean that ERPs are not governed by the review and approval sections of OAD 7. Since Section 12 states that approved procedures are not binding during emergency situations, it is unnecessary to except the ERPs from the review and approval guidance in OAD 7. These sections should be revised accordingly.

Response:

This has been resolved. Refer to Sections 2.6 and 2.7 of GSAD-3 contained in Attachment 9.

C. Verification/Validation Program

1. The types of personnel involved in the verification and validation process (i.e., engineers, procedure writers, operations personnel, human factors experts), the criteria for selection of this team, and the roles and responsibilities of these individuals, should be specified.

Response:

GSAD-6 and 7 contained in Attachments 4 and 5 address the Validation and Verification processes including the selection of personnel.

2. To assure verification and validation of all of the EOPs, the program description should include an indication that the full complement of EOPs will be exercised.

Response:

The full complement of EOPs were exercised in the Indian Point Unit No. 2 Validation and Verification program, the results of which are contained in Attachments 6 and 7, respectively.

3. The validation program should be expanded to include a description of the criteria that will be used to select the scenarios to be run during the validation process. The criteria should be developed on the basis of what is needed to validate the procedures and should ensure that single, sequential, and concurrent failures are included. A review of the capabilities and the limitations of the simulator will then identify what can be validated on the simulator. For the parts of the EOPs that cannot be validated on the simulator, the criteria for selecting any additional validation that may be needed and the methods to be used, such as a control room walk-through or a mock-up walk-through, should be described.

Response:

GSAD-6 includes the criteria for the EOP Validation scenarios and is contained in Attachment 4. The simulator capabilities and limitations were identified in the initial EOP Validation Program and the results are contained in Attachment 6. Qualified Westinghouse instructors were used to augment the simulator validation and training.

4. The PGP should indicate that feedback from simulator exercises, walk-throughs, and table-top reviews will be utilized to ensure the accuracy, readability, usability, and completeness of the EOPs.

Response:

As indicated earlier, feedback from each phase of the upgraded EOP development program was utilized in updating the EOPs prior to the next phase up to final issuance. GSAD-6 is the procedure that assures adequate resolution of feedback items from the validation and is contained in Attachment 4.

5. The verification and validation program should include the criteria or methods that will be used for determining the need to reverify and revalidate any changes in the EOPs, resultant from either the verification and validation program or from subsequent EOP revisions.

Response:

GSAD-6 and 7 provide the criteria for making this determination and are contained in Attachments 4 and 5.

6. The EOPs will require a certain number of operators to carry out the various activities and steps as specified. The verification and validation program should include that the EOPs will be exercised, during simulator exercises or control room walk-throughs, with the minimum control room staff size required by the facility Technical Specifications.

Response:

EOP Validation utilized the minimum staffing required by the Technical Specifications consistent with their roles and responsibilities. The criteria for validation of future EOP revisions is included in GSAD-6 contained in Attachment 4.

7. The verification and validation program must determine if the instruments and controls that were identified during the task analysis are the ones that are referred to in the EOPs, and are available in the control room. A discussion of this should be included in the PGP. (This task may be done in conjunction with the Control Room Design Review).

Response:

This was accomplished in the DCRDR SFTA activity as discussed in our response to item A.3.a above.

8. The PGP should describe the specific items (i.e., provide checklists) that are to be verified and validated. This should include appropriate items from both the P-STG and the writer's guide.

Response:

Checklists are included in the validation and verification procedures GSAD-6 and 7, contained in Attachments 4 and 5.

D. Training Program

1. Although the PGP states that the Indian Point Unit No. 2 simulator will be used for operator training, the training program description should be of the EOPs that cannot be run on the simulator.

   a. Discuss the method to be used to train the operators in areas where the simulator does not react like the plant and in parts of the EOPs that cannot be run on the simulator.

Response:

The simulator capability assessment conducted by Westinghouse prior to the EOP Validation was evaluated for its use in the EOP training phase. This resulted in making some software enhancements which increased the number of EOPs that can be run on the

simulator. The full inadequate core cooling (ICC) scenario could not be run because of modeling restraints and a walk through for the remainder of the scenario was conducted and provided good experience. The Indian Point Unit No. 2 simulator does display reasonable plant conditions and trends for most accident(s) and/or equipment failures introduced (exhibits a remarkable amount of stability during complicated accident scenarios). The simulator also displays reasonable plant conditions and trends during most of the operator interfaces with the simulator. Many of the simulator training scenarios required interface between the in-house and Westinghouse instructors, simulator, and students in order to make the scenarios work.

1.b. Indicate the use of a wide variety of scenarios, including multiple (simultaneous and sequential) failures, to fully exercise the EOPs on the simulator and thus expose the operators to a wide variety of EOP uses.

Response:

The simulator training scenarios used during the 2 week Simulator Training session were:

1) Inadvertent Reactor Trip
2) Inadvertent Safety Injection
3) Loss of Off-Site Power-Natural Circulation Cooldown
4) Small Loss of Reactor Coolant Accident
5) Large Loss of Reactor Coolant Accident
6) Loss of Reactor Coolant Outside Containment
7) Steamline Break Inside Containment
8) Feedline Break Inside Containment
9) Depressurization of All Steam Generators
10) Small Steam Generator Tube Rupture
11) Large Steam Generator Tube Rupture
12) SG Tube Rupture Recovery Procedures
13) Loss of All AC Power
14) SGTR without PRZR Pressure Control
15) Steamline Break with SG Tube Rupture
16) Anticipated Transient Without Scram
17) Loss of Heat Sink - Condensate System Available
18) Loss of Heat Sink - RCS Feed and Bleed
19) Inadequate Core Cooling
20) RCS Voids due to Rapid Cooldown
21) Pressurized Thermal Shock
22) Containment Integrity

Various EOPs were exercised during each of the scenarios covering the full compliment.

2. Although the PGP states that walk-throughs will be used for operator training, the training program description should be expanded to address the following items:

a. Discuss the extent that the EOPs will be covered by all operators particularly if walk-throughs will be used to train aspects of EOPs not taught in the simulator.

b. Indicate the use of a wide variety of scenarios to fully exercise the EOPs during the walk-throughs.

Response:

As described earlier, all licensed operators received six weeks of training in the EOPs. All EOPs were covered in the program. A wide variety of scenarios were used as indicated in the above response to item 1 and when coupled with the instructor's interface with the simulator and the students, the walk-through portion of the ICC scenario was easily accomplished.

3. The PGP should include a commitment to train all operators on all EOPs prior to EOP implementation in the control room.

Response:

As indicated earlier, all licensed operators were trained on all EOPs prior to their final issuance in the control room.

4. Section 6.6 (page 9) states that training on major revisions will be conducted in the classroom if both the plant and the simulator are unavailable. Classroom training alone is acceptable for minor changes, but is not acceptable for training on major revisions. This section should be revised accordingly.

Response:

As described in GSAD-3, EOP revisions are sent to training after they have undergone validation. Depending on the type of validation conducted and its results, a determination is made by the Operations Department as to the degree of training necessary in the revision. Classroom training is acceptable for any type of revision and, on the basis of the validation and verification activities, it may be the preferred method of training in an EOP revision.

5. Although the PGP table of contents refers to a section covering operator evaluations following training (Section 6.8, page 9) and effects on the current refresher training program, these sections are missing from the PGP. The PGP should state that operator's performance with the EOPs will be evaluated and that evaluation

will follow any training on revisions to the EOPs and refresher training program, these sections are missing from the PGP. The PGP should state that operators' performance with the EOPs will be evaluated and that evaluation will follow any training on revisions to the EOPs and refresher training.

Response:

During the initial training in the upgraded EOPs, exams were given each week for the first four weeks including a comprehensive final exam prior to the start of the 2-week simulator training phase. A comprehensive evaluation on the simulator was conducted at the end of the sixth week. Operator performance evaluations will generally not be given on each EOP revision. If a major change in training is necessary due to an EOP revision (e.g. new mitigative strategy) operator performance evaluations may be considered necessary. For operator requalification, a five day classroom/simulator combined training is conducted over a two year retraining cycle reviewing the more important aspects of the EOPs. Written and simulator exams are conducted as part of the requalification program.

Attachment 2

EOP Step Differences

Consolidated Edison Company of New York, Inc.
Indian Point Unit No. 2
February , 1987

INDIAN POINT UNIT 2 EOP STEP DOCUMENTATION FORM

INTRODUCTION

The EOP step documentation form was developed for the purpose of documenting the technical differences between the WOG ERGs and the Indian Point Unit 2 EOPs. Recorded on these forms are the technical differences, and the explanations or bases for them. The documentation forms are compiled in order of procedure number, and can be used effectively with the following information:

1) When there are technical differences between a given EOP and its corresponding ERG, the EOP step number will be listed in the left column of the form. The step number of the respective ERG step will be listed in the center column, and the explanation or basis of the difference will be given in the right column.

2) A copy of the ERGs and EOPs must be used in conjunction with step documentation forms as a step text is not presented on the forms.

3) For EOP steps not listed on the forms, there are no technical differences from the ERG steps. Therefore, no explanation or bases are needed.

INDIAN POINT UNIT 2 EOP STEP DOCUMENTATION FORM

EOP No.: E-0 Rev.: 1

Title: Reactor Trip or Safety Injection

Prepared by: J. G. Del Percio Date: 01/10/87

Reviewed by: R. Redding Date: 01/13/87

IP2 STEP NO.	ERG STEP NO.	EXPLANATION OR BASIS FOR DIFFERENCE
Cover Page	-	Adverse containment conditions were added to the cover page as a reminder to the operator.
Note before Step 1	-	Added note to remind operators to monitor status trees after transitioning from E-0.
1	1	Removed check of reactor trip bypass breakers as a verification for a reactor trip because these breakers are normally racked out, sufficient indications of reactor trip exist in the operator's main panel area, and contingency actions to shut down the reactor are provided.
1 RNO	1 RNO	Added a contingency for tripping the reactor before transitioning to FR-S.1 because the busses can be de-energized/ energized from the control room with minimal time constraints.
2	2	Turbine governor valves were added as an expected response. Contingency actions were added for manually tripping the turbine. If the stop valves can not be closed, then the MSIVs are to be shut to stop steaming to the turbine. A third contingency of running back the turbine was also added.

IP2 STEP NO.	ERG STEP NO.	EXPLANATION OR BASIS FOR DIFFERENCE
3	4	The order of Steps 3 and 4 of the ERGs were switched because of plant specific design of SI actuation. All busses strip momentarily with equipment sequenced back on an SI signal. Since this is comparable to a blackout condition on the reference plant, the step was placed before the "verify power" step to decipher this similarity.
CAUTION before Step 4	-	Two cautions were added to address the diesel generator load limits.
4	3	Expected responses for generator trip were added to this step since the SI actuation step was placed prior to this, resulting in an immediate generator trip on SI. Based on SI actuation design, lighting and MCCs must be reset at this time due to insufficient lighting from plant design. Also, the starting of a charging pump is desireable at this time for RCP seal injection.
CAUTION before Step 5	-	A caution warning against the starting of the CCW pumps if a containment spray pump is running was added.
5	9	Bus 6A does not load a CCW pump in the IP design. If 6A is the only available bus, the de-energized buses must be stripped and bus-tie breakers closed to provide an available power source for running a CCW pump to provide cooling to the SI pumps. If a CCW pump can not be started, the operator is instructed to trip the RCPs and refer to an abnormal plant procedure. Also, the ACC pumps are verified to be running.
6	5	Boiler feed pump tripped and discharge valve closure was added as an expected response for FW isolation due to plant specific design. Also, SG sample isolation valves were deleted because they are downstream of the blowdown isolation valves.

IP2 STEP NO.	ERG STEP NO.	EXPLANATION OR BASIS FOR DIFFERENCE	
7	18	High-level step was rearranged for clarity since there is no emergency alignment indication in the control room.	
8	6	Isolation valve seal water system valves were added due to plant specific system design.	1 1
11	10	Three service water pumps are required on the essential header to provide essential cooling and the importance of providing diesel generator cooling is also stressed.	
12	11	Step was changed to reflect the difference between plant design and the reference plant design. The IP2 fan coolers have only one speed and on an SI signal, fan coolers are realigned through charcoal filters.	
14	-	Air conditioner status step was added as essential equipment required by specific plant design.	
16	14	The negative response was removed per Westinghouse recommendation and utility concurrence with step being rewritten accordingly.	
19	17	IP2 does not have an indication for proper emergency alignment of AFW flow to all trains so the flow indicators are checked.	
20	-	This step was deleted in Revision 1 of IP2 EOPs due to BIT being eliminated from the plant design. SI pump suction is aligned to the RWST for the injection phase and provides sufficient boron for all analyzed accident conditions. Throughout the EOP network the ERG guidance to transfer SI pump suction to the RWST on BAT low level if SI has been reset is not applicable.	1

IP2 STEP NO.	ERG STEP NO.	EXPLANATION OR BASIS FOR DIFFERENCE
CAUTION before Step 21, Step 21	CAUTION before Step 19, Step 19	Step 19 of the ERGs to check RCP seal cooling was deleted and replaced with "verifying a charging pump running at minimum speed for seal injection" for the following reasons: 1) SI does not need to be reset to start charging pumps so ERG caution can be eliminated. 2) The concern of this step is to verify a charging pump is running to establish seal injection to protect the seals and prevent unfiltered water from entering the RCS. 3) Seal cooling is not a concern at this time and is covered in the charging flow established step (Step 42). 4) CCW flow check to RCP thermal barriers is deleted due to the plant specific steps included in Step 5.
22	-	Verification of one service water pump on non-essential header was added as essential equipment required by specific plant design.
23	-	Battery charger step was added as essential equipment required by specific plant design.
24	-	The step for verifying/establishing an air supply was added because it is highly desireable to have an air supply as soon as possible.
26 RNO	21 RNO	PRZR PORV block valves are in the closed position during normal plant operation so the step was rewritten to verify them closed.

IP2 STEP NO.	ERG STEP NO.	EXPLANATION OR BASIS FOR DIFFERENCE
28	23	The negative response was removed per Westinghouse recommendation and utility concurrence with step being rewritten accordingly.
29	24	Same as Step 27.
31d RNO	26d RNO	Eliminated part of step to stabilize pressure using spray because charging pumps are PD pumps and spraying to maintain pressure will not help to fill the pressurizer.
2nd CAUTION before Step 33	-	A caution was added addressing the potential for water hammer caused by excessive AFW flow to intact SGs. 1
34b	29b	SG narrow range level was changed from 50% to 65% to be less constrictive in controlling level.
2nd CAUTION before Step 37	-	The caution regarding automatic re-initiation of SI from Basic version of ERGs was added per utility request. 1
-	2nd CAUTION before Step 33	Caution was deleted due to system design having no BIT and SI aligned to take suction from the RWST. 1
Step 37	Step 33	Added appropriate actions required for resetting SI and re-energizing all MOVs on MCC 26 A and B.

IP2 STEP NO.	ERG STEP NO.	EXPLANATION OR BASIS FOR DIFFERENCE
40	30	Step was moved after the reset of SI since activity samples could not be taken until SI has been reset.
-	37	ERG step was deleted because the actions which satisfy the requirements for starting a charging pump was covered earlier in the procedure.

1 1

INDIAN POINT UNIT 2 EOP STEP DOCUMENTATION FORM

EOP No.: ES-0.0 Rev.: 0

Title: Rediagnosis

Prepared by: K. J. Victor Date: 07/12/84

Reviewed by: S. R. Prokopovich, R. R. Oft Date: 07/16/84

IP2 STEP NO.	ERG STEP NO.	EXPLANATION OR BASIS FOR DIFFERENCE
Cover Page		Adverse containment conditions were added to the cover page as a reminder to the operator.
1,2, & 3	1,2, & 3	The negative expected responses were deleted per Westinghouse recommendation and utility concurrence, and reworded accordingly.
4	4	Due to the change of Step 3 expected response, the transitioning of Step 3 RNO and Step 4 were switched.

INDIAN POINT UNIT 2 EOP STEP DOCUMENTATION FORM

EOP No.: ES-0.1 Rev.: 1

Title: Reactor Trip Response

Prepared by: J. D. Del Percio Date: 01/10/87

Reviewed by: R. Redding Date: 01/13/87

IP2 STEP NO.	ERG STEP NO.	EXPLANATION OR BASIS FOR DIFFERENCE	
Cover Page	-	Adverse containment conditions were added to the cover page as a reminder to the operator.	
2nd & 3rd CAUTION before Step 1	-	Two cautions were added to address the diesel generator load limits.	
1	-	The entire step of verifying power to ac 480V busses was extracted from E-0 because the order of the SI actuation step and this one were switched in E-0 (Steps 3 and 4), resulting in the need for this step in ES-0.1 if there was a reactor trip with no SI signal. The note relating to the generator trip was added because there is a time delay associated with it for a reactor or turbine protection trip with no SI. Also, based on SI actuation design, lighting & MCCs have to be reset at this time due to insufficient lighting from plant design. Also, the starting of a charging pump is desireable at this time for RCP seal injection.	1 1
3b	2b	FW bypass regulating valves were added because these valves close on a reactor trip and low T_{avg} signal as part of the steam line break analysis at low reactor power ($<$30%) when FW bypass may be feeding the S/Gs.	1

IP2 STEP NO.	ERG STEP NO.	EXPLANATION OR BASIS FOR DIFFERENCE
3c	2c	Main FW on bypass was deleted as a contingency to establishing feed flow to the SGs per utility request because of control system problems necessitating local action to start a main FW pump involving time constraints and also will result in additional cooldown. The status trees will cover the transition to FR-H.1 where starting a main feed pump will be covered. Subsequent to the pending FW system modification (Lovejoy) consideration should be given to including this contingency step.
4	-	A list of automatic actions of a reactor trip was listed per utility request as necessary information.
6	4	Substep b of the ERGs was broken up into separate charging and letdown steps to add information to the contingency actions. As a result of doing this, "verify charging" was placed before the level check corresponding to the letdown isolation setpoint and Substeps b4) and 5) were added to place letdown in service and go to Step 6d when PRZR level greater than 18%.
7b RNO	5b RNO	PRZR PORV block valves are in the closed position during normal plant operation so the step was rewritten to verify them closed if a PRZR PORV could not be closed and pressure is less than 2235. If pressure is greater than 2235 and auxiliary spray can not be used, a block valve must be opened along with a PORV.
CAUTION Step 8	-	A caution addressing the potential for water hammer caused by excessive AFW flow to the intact SGs was added.
-	CAUTION Step 9	Caution deleted because IP2 does not have an RTD bypass loop in plant design.
15	-	Added step from present IP2 procedures because it will prevent the bowing of the turbine and expedite startup from a spurious SI.

INDIAN POINT UNIT 2 EOP STEP DOCUMENTATION FORM

EOP No.: ES-0.2 Rev.: 1

Title: Natural Circulation Cooldown

Prepared by: J. G. Del Percio Date: 01/10/87

Reviewed by: R. Redding Date: 01/13/87

IP2 STEP NO.	ERG STEP NO.	EXPLANATION OR BASIS FOR DIFFERENCE
Cover Page	-	Adverse containment conditions were added to the cover page as a reminder to the operators.
2, 3 & 4	2, 3 & 4	Boration of RCS step was changed to use the Graphs Book for guidance rather than borating to cold shutdown conditions. The looping arrangements in Steps 3 and 4 were also changed to accommodate this.
8a RNO	8a RNO	The contingency to depressurize the RCS if letdown can not be established is to use a PRZR PORV. For IP2, the block valve must also be opened to provide a flow path.
9	9	IP2 does not have a low steamline pressure SI signal actuation logic.
12b	12b	Hot leg RTDs were used for RCS subcooling because core exit TCs are not qualified.
12c	12c	A block valve must be used in conjunction with a PORV to provide the necessary flow path.
Note before Step 13	-	POP3.3 was referred to because the concern for total plant cooldown must be addressed. The ERGs only cover core conditions.
15 & 16	15	ERG step of locking out SI system was broken up into two steps to comply with the Writers Guide since it involves two separate actions. The accumulators and the SI pumps have to be checked in order to accomplish the ERG intent.

IP2 STEP NO.	ERG STEP NO.	EXPLANATION OR BASIS FOR DIFFERENCE
20	-	The step was added to provide the necessary instruction for establishing the nitrogen bubble in the PRZR required for cooldown to cold shutdown conditions.
Note before Step 23	-	A note was added addressing the time constraints of allowing the head to cool. This information was extracted from the background documents.

INDIAN POINT UNIT 2 EOP STEP DOCUMENTATION FORM

EOP No.: ES-0.3 Rev.: 1

Title: Natural Circulation Cooldown With Steam Void in Vessel (With RVLIS)

Prepared by: J. G. Del Percio Date: 01/10/87

Reviewed by: R. Redding Date: 01/13/87

IP2 STEP NO.	ERG STEP NO.	EXPLANATION OR BASIS FOR DIFFERENCE
Cover Page	-	Adverse containment conditions were added to the cover page as a reminder to the operators.
1	-	The new step was added to determine if RVLIS is available, and if not, the transition to ES-0.4 should be performed. The ERG procedures were written for plants with/without RVLIS instrumentation installed. Utility decided to keep both procedures even though it has RVLIS installed in the unlikely event that both RVLIS trains became unabailable.
2	1	The conditions for starting an RCP were placed before the check for RVLIS indication since the intent of the step is starting an RCP. Also, RVLIS full range was changed to RVLIS natural circulation range due to plant design of having two RVLIS ranges.
3	2	The PRZR level indication was changed from 30% to 25% to be consistent with Step 2 of ES-0.4, and in doing so, it becomes more conservative.
Note before Step 4	-	POP 3.3 was referred to because the concern for total plant cooldown must be addressed. The ERGs only cover core conditions.

1

IP2 STEP NO.	ERG STEP NO.	EXPLANATION OR BASIS FOR DIFFERENCE
4b	3b	Hot leg wide range RTDs were used for subcooling since core exit TCs are not qualified.
4d RNO	3d RNO	The PRZR PORV block valve must also be opened to provide the necessary flow path to depressurize RCS.
4e	3e	Plant specific means for establishing auxiliary spray was added.
6	5	IP2 does not have the upper range indication of RVLIS. The natural circulation range covers the upper range as well and must be used. Also, the plant specific means of repressurizing the RCS was added. 1
7 & 8	6	The ERG step for locking out the SI system is covered under one high level statement. To accomplish this, IP2 must check if the accumulators should be isolated and if the SI pumps should be isolated. To comply with Writers Guide, two steps were used.
12	-	The step was added to provide the necessary instruction for establishing the nitrogen bubble in the PRZR required for cooldown to cold shutdown conditions.
14c	11c	IP2 does not have the upper range indication of RVLIS. The natural circulation range covers the upper range as well and must be used. 1
Note before Step 15	-	A note was added addressing the time constraints of allowing the head to cool. This information was extracted from the background documents.

INDIAN POINT UNIT 2 EOP STEP DOCUMENTATION FORM

EOP No.: ES-0.4 Rev.: 0

Title: Natural Circulation Cooldown With Steam Void in Vessel (Without RVLIS)

Prepared by: K. J. Victor Date: 07/26/84

Reviewed by: R. R. Oft Date: 07/31/84

IP2 STEP NO.	ERG STEP NO.	EXPLANATION OR BASIS FOR DIFFERENCE
Cover Page	Cover Page	The symptoms or entry conditions was changed to ES-0.3 if RVLIS is not available since IP2 elected to incorporate both natural circulation cooldown procedures (with and without RVLIS).
Cover Page	-	Adverse containment conditions were added to the cover page as a reminder to the operators.
-	2nd CAUTION before Step 1	The caution relating to ES-0.2 was deleted since after the first eleven steps of ES-0.2, the operator is instructed to go to ES-0.3 if necessary to check if RVLIS is available. If not, then this procedure is used.
1	1	The step for establishing conditions for starting an RCP was placed before the checks on PRZR level and RCS subcooling since the intent of the step is to try to restart an RCP.
1c	1c	Hot leg wide range RTDs were used for subcooling since core exit TCs are not qualified.
4a RNO	4a RNO	The PRZR PORV block valve must also be opened in conjunction with a PORV to provide the necessary flow path.

ES-0.4, Natural Circulation Cooldown With Steam Void in Vessel (Without RVLIS) (cont.)

IP2 STEP NO.	ERG STEP NO.	EXPLANATION OR BASIS FOR DIFFERENCE
1st Note before Step 5	-	POP 3.3 was referred to because the concern for total plant cooldown must be addressed. The ERGs only cover core conditions.
2nd Note before Step 5	Note before Step 5	Westinghouse reworded the content of the note per utility request that the ERG wording is confusing.
5	5	The step was changed to decrease the RCS hot leg temperature to 400F because IP2 has the capability to cooldown faster than what is called for by the ERGs. Consequently, several steps have been deleted from the ERGs since it took two iterations in the ERGs to get down to 400F.
8	10	For locking out SI system at IP2, it is required to check the accumulators and the SI pumps. Only the accumulators are checked here since the SI pumps have a 350F constraint on being isolated. This check is done when the operator has been instructed to decrease RCS hot leg temperature to 350F.
9c	8c	Change was made to depressurize RCS to 600 psig instead of the 800 psig in the ERGs to make plant specific.
14c	13c	Change was made to depressurize RCS to 450 psig instead of the 600 psig in the ERGs to make plant specific.
17	-	The step for establishing a nitrogen bubble in the PRZR was added since it is a concern at this time before cooling down to cold shutdown conditions.
Note before Step 20	-	A note was added addressing the time constraints of allowing the head to cool. This information was extracted from the background documents.

INDIAN POINT UNIT 2 EOP STEP DOCUMENTATION FORM

EOP No.: Foldout - ECA-3.2 Rev.: 0

Title: Foldout for ECA-3.2 Procedures

Prepared by: R. J. Lopiccolo Date: 09/10/84

Reviewed by: R. R. Oft Date: 09/14/84

IP2 STEP NO.	ERG STEP NO.	EXPLANATION OR BASIS FOR DIFFERENCE
1	1	Plant design has two RVLIS instrument range indications compared to the three ranges of the reference plant. The natural circulation range and the RCP running range compare to the full range and the dynamic head range of the reference plant, respectively.
5	2	The Red Path Summary was moved to the end of the page due to the validation finding of being the least important item on the foldout page.

INDIAN POINT UNIT 2 EOP STEP DOCUMENTATION FORM

EOP No.: Foldout - E-0 Series Rev.: 0

Title: Foldout for E-0 Series Procedures

Prepared by: K. J. Victor Date: 07/26/84

Reviewed by: R. R. Oft Date: 07/31/84

IP2 STEP NO.	ERG STEP NO.	EXPLANATION OR BASIS FOR DIFFERENCE
2	2	The SI actuation criteria was changed to SI pump operation criteria because if the SI pumps are required, they are to be operated as necessary rather than actuating SI to start the pumps to avoid placing a transient on the plant of all busses stripping and reloading on an SI signal.
2	2	Hot leg wide range RTDs were used for subcooling because core exit TCs are not qualified.
4	3	The Red Path Summary was moved to the end of the page due to the validation finding of being the least important item on the foldout page.

INDIAN POINT UNIT 2 EOP STEP DOCUMENTATION FORM

EOP No.: E-1 Rev.: 1

Title: Loss of Reactor or Secondary Coolant

Prepared by: J. G. Del Percio Date: 01/10/87

Reviewed by: R. Redding Date: 01/13/87

IP2 STEP NO.	ERG STEP NO.	EXPLANATION OR BASIS FOR DIFFERENCE	
Cover Page	-	Adverse containment conditions were added as a reminder to the operators.	
CAUTION before Step 1	-	A caution was added to address the concern of stopping RCPs. If RVLIS indication is low, RCPs shall be operated as per FR-C.2 for core cooling concerns.	1
2	2	The negative response was removed per Westinghouse recommendation and utility concurrence with step being rewritten accordingly. Also, a substep was added to verify that faulted SG(s) were previously isolated.	
CAUTION before Step 2	-	A caution addressing the potential for water hammer caused by excessive AFW flow to the intact SGs was added.	1
8	4	ERG step was moved to Step 8 since sampling can not be accomplished until SI has been reset.	
4	5	Substep c of the ERGs was deleted because IP2 operates with PRZR block valves closed.	
-	2nd CAUTION before Step 6	Caution was deleted due to system design having no BIT and SI aligned to take suction from the RWST.	1

E-1, Loss of Reactor or Secondary Coolant (cont.)

IP2 STEP NO.	ERG STEP NO.	EXPLANATION OR BASIS FOR DIFFERENCE
2nd CAUTION before Step 5	-	The caution regarding automatic reinitiation of SI from Basic was used per utility request.
5	6	Added appropriate actions required for resetting SI and re-energizing all MOVs on MCCs 26A and 26B.
6	7	IP2 has a "daisy chain" design for its containment isolation valves. All valve switches must be in the closed position, except for the IVSW switches, in order to reset the containment isolation signal. The design includes override key switches to reset Phases A & B in the unlikely event that the "daisy chain" circuit arrangement malfunctioned preventing a desired reset action even though the valves are closed.
-	9	Step was deleted because the start of a charging pump was covered early in E-0, so at this time, a charging pump should be running.
10d RNO	11d RNO	Eliminated part of the step to stabilize RCS pressure with PRZR spray because charging pumps are PD pumps and spraying to maintain pressure will not help to fill the pressurizer.
13	CAUTION before Step 14 and Step 14	Substep b has been removed because SI will have already been reset by this time. By doing this, the caution regarding SI reset can also be deleted.
16a RNO	17a RNO	The contingency of trying to restore cold leg recirculation capability was added before transitioning to ECA-1.1.
-	22	Step was deleted because energizing all MOVs on MCC 26A and MCC 26B will energize the valves necessary for hot leg recirculation as well as cold leg recirculation. MCC 26A and MCC 26B were energized in Step 5.
CAUTION before Step 19	-	A caution was added to prevent main steamline isolation.

INDIAN POINT UNIT 2 EOP STEP DOCUMENTATION FORM

EOP No.: ES-1.1 Rev.: 1

Title: SI Termination

Prepared by: J. G. Del Percio Date: 01/10/87

Reviewed by: R. Redding Date: 01/13/87

IP2 STEP NO.	ERG STEP NO.	EXPLANATION OR BASIS FOR DIFFERENCE	
Cover Page	-	Adverse containment conditions were added to the cover page as a reminder to the operator.	
-	2nd CAUTION before Step 1	Caution was deleted due to system design having no BIT and SI aligned to take suction from the RWST	1
2nd CAUTION before Step 1	-	The caution regarding automatic re-initiation of SI from basic was added per utility request.	1
1	1	Added appropriate actions required for resetting SI and re-energizing all MOVs on MCC 26A and B.	
2	2	IP2 has a "daisy chain" design for its containment isolation valves. All valve switches must be in the closed position except for the IVSW switches, in order to reset the containment isolation signal. The design includes override key switches to reset Phases A and B in the unlikely event that the "daisy chain" circuit arrangement malfunctioned preventing a desired reset action even though the valves are closed.	1

IP2 STEP NO.	ERG STEP NO.	EXPLANATION OR BASIS FOR DIFFERENCE	
-	4	Step was deleted because SI pumps are always aligned to the RWST during injection and the design does not have a BIT.	1
6	7	Hot leg wide range RTDs were used for subcooling because the core exit TCs are not qualified.	
7	-	A step was added to check for a stuck rod because if SI was spurious, pressure would remain high and no injection would be present. Boration would be required with a stuck rod. ERG maintenance item No. DW-85-081.	1
12	17	Step 17 of the ERGs was moved so RCP seal cooling was checked before seal return flow. Also, seal injection does not need to be covered in the seal return flow step since it is covered in seal cooling.	
16 RNO	15 RNO	Plant specific means for using auxiliary spray were added. Also PRZR block valve must be used with a PORV to provide the necessary flow path if auxiliary spray can not be used.	
CAUTION before Step 17	-	A caution addressing the potential for water hammer caused by excessive AFW flow to the intact SGs was added.	1
CAUTION before Step 18	-	A caution addressing the diesel generator load limits was added.	
-	2nd CAUTION before Step 19	Caution was deleted because IP2 does not have an RTD bypass loop in plant design. Added step from present IP2 procedure because it will prevent the bowing of the turbine and expedite startup from a spurious SI.	

IP2 STEP NO.	ERG STEP NO.	EXPLANATION OR BASIS FOR DIFFERENCE
26	-	A step was added to reset FCU services and CCR ventilation because this action is required following an SI actuation. By placing this step in SI TERMINATION, it will cover all cases.

INDIAN POINT UNIT 2 EOP STEP DOCUMENTATION FORM

EOP No.: ES-1.2 Rev.: 1

Title: Post-Loca Cooldown and Depressurization

Prepared by: J. G. Del Percio Date: 01/10/87

Reviewed by: R. Redding Date: 01/13/87

IP2 STEP NO.	ERG STEP NO.	EXPLANATION OR BASIS FOR DIFFERENCE		
Cover Page	-	Adverse containment conditions were added to the cover page as a reminder to the operator.		
2nd CAUTION before Step 1	1b RNO	Step 1b of ERGs addressing the load on the diesel was made into a caution since it is essential to have the charging pumps running in this optimal recovery procedure. incorporated the starting of the pumps.	E-0	1
CAUTION before Step 3	-	A caution was added due to the plant specific design of the charging pump suction lines being routed to an elevation above the pump and then back down over a wall which may cause cavitation of the pump (loop seal) if the pump was not previously running. This is monitored by first observing the level of the RWST.		1
CAUTION before Step 4	-	A caution addressing the potential for water hammer caused by excessive AFW flow concern of adding AFW flow to intact SGs was added.		1
-	Note before Step 5	Note was removed because IP2 does not have a low steamline pressure SI signal.		
6	6	Hot leg wide range RTDs were used for subcooling because core exit TCs are not qualified.		

IP2 STEP NO.	ERG STEP NO.	EXPLANATION OR BASIS FOR DIFFERENCE
7	7	Step was changed to cover SI pumps running and RHR pumps injecting to cover the step looping arrangements for the SI reduction scheme. By adding the RHR pump criteria in Step 7, it eliminates adding the requirements in Steps 14, 15, 16, and 17.
9a	9a	Step was rewritten to inform the operator to use maximum PRZR spray to refill PRZR. If spray is not available, a PRZR PORV and block valve must be opened to provide the necessary flow path.
-	2nd CAUTION before Step 10	Caution was deleted because there is no RTD bypass loop in plant design.
10	10	Hot leg wide range RTDs were used for subcooling because core exit TCs are not qualified.
11,12,13	11	The ERG step of stopping one SI pump each time through the loop arrangement was broken down into three individual steps (one for stopping each pump) to satisfy the plant specific SI reduction scheme.
-	2nd CAUTION before Step 13	Caution was deleted because there is no RTD bypass loop in plant design.
16a RNO	14a RNO	A PRZR PORV block valve must also be used in conjunction with the PORV to provide the necessary flow path if normal PRZR spray is not available.
16c	14c	Hot leg wide range RTDs were used for subcooling because core exit TCs are not qualified.
18a	16a	Hot leg wide range RTDs were used for subcooling because core exit TCs are not qualified.

IP2 STEP NO.	ERG STEP NO.	EXPLANATION OR BASIS FOR DIFFERENCE
19a	19a	Hot leg wide range RTDs were used for subcooling because core exit TCs are not qualified.
19c RNO	17c RNO	Plant specific means for venting the accumulators were added.
19d	-	A step was added to open the accumulator isolation valve breakers, after the isolation valves have been closed, to lock out the accumulators.
23	23	This step was moved after the RCP seal return flow check so that all three RCP checks are together (RCP seal cooling, RCP seal return, and RCP stop check).
Note before Step 26	-	POP 3.3 was referred to because the concern for total plant cooldown must be addressed. The ERGs only cover core conditions.

INDIAN POINT UNIT 2 EOP STEP DOCUMENTATION FORM

EOP No.: ES-1.3 Rev.: 1

Title: Transfer to Cold Leg Recirculation

Prepared by: J. G. Del Percio Date: 01/10/87

Reviewed by: R. Redding Date: 01/13/87

IP2 STEP NO.	ERG STEP NO.	EXPLANATION OR BASIS FOR DIFFERENCE
Cover Page	-	Adverse containment conditions were added to the cover page as a reminder to the operators.
1st CAUTION before Step 1	1st CAUTION before Step 1	The caution was expanded to state that FRPs should not be implemented before completing Steps 1-23 because cold leg recirculation actions have priority over the FRPs.
4th CAUTION before Step 1	-	The caution regarding automatic reinitiation of SI from Basic version of ERGs was added per utility request.
Step 1	Step 1	Added appropriate actions required for resetting SI and re-energizing all MOVs on MCC 26A and 26B.
General	General	The ERG guideline of the typical steps pertaining to transfer were not followed due to IP2 Recirculation System design and Recirculation Switches sequence.

INDIAN POINT UNIT 2 EOP STEP DOCUMENTATION FORM

EOP No.: ES-1.4 Rev.: 0

Title: Transfer to Hot Leg Recirculation

Prepared by: K. J. Victor Date: 08/10/84

Reviewed by: R. R. Oft Date: 08/17/84

IP2 STEP NO.	ERG STEP NO.	EXPLANATION OR BASIS FOR DIFFERENCE
Cover Page	-	Adverse containment conditions were added to the cover page as a reminder to the operators.

INDIAN POINT UNIT 2 EOP STEP DOCUMENTATION FORM

EOP No.: Foldout - E-1 Series Rev.: 0

Title: Foldout for E-1 Series Procedures

Prepared by: K. J. Victor Date: 08/10/84

Reviewed by: R. R. Oft Date: 08/17/84

IP2 STEP NO.	ERG STEP NO.	EXPLANATION OR BASIS FOR DIFFERENCE
2	2	Hot leg wide range RTDs were used for subcooling because core exit TCs are not qualified.
7	3	The Red Path Summary was moved to the end of the page due to the validation finding of being the least important item on the foldout page.

INDIAN POINT UNIT 2 EOP STEP DOCUMENTATION FORM

EOP No.: E-2 Rev.: 1

Title: Faulted Steam Generator Isolation

Prepared by: J. G. Del Percio Date: 01/10/87

Reviewed by: R. Redding Date: 01/13/87

IP2 STEP NO.	ERG STEP NO.	EXPLANATION OR BASIS FOR DIFFERENCE	
Cover Page	-	Adverse containment conditions were added to the cover page as a reminder to the operators.	
1	1	MSIV bypass valves were deleted because valves are normally closed and are manually operated locally.	1
2	2	The negative response was removed per Westinghouse recommendation and utility concurrence with step being written accordingly.	
3a RNO	3a RNO	The contingency action of searching for the initiating break was deleted because of the hazard of sending personnel into the area of the break.	
CAUTION before Step 4	-	A caution warning against potential high radiation fields was added for attempting to close the steam supply header valves since these are local valves.	
6	6	The unisolated secondary radiation monitors from the ERGs were expanded to include only main steamline radiation. Condenser air ejector radiation recorder, and SG blowdown radiation recorders were added so that the recorded reading prior to their isolation could be observed.	1

INDIAN POINT UNIT 2 EOP STEP DOCUMENTATION FORM

EOP No.: E-3 Rev.: 1

Title: Steam Generator Tube Rupture

Prepared by: J. G. Del Percio Date: 01/10/87

Reviewed by: R. Redding Date: 01/13/87

IP2 STEP NO.	ERG STEP NO.	EXPLANATION OR BASIS FOR DIFFERENCE
Cover Page	-	Adverse containment conditions were added to the cover page as a reminder to the operator.
3rd CAUTION before Step 3	-	A caution warning against potential high radiation fields was added for attempting to close the steam supply header valves since these are local valves.
3b	-	An RCS temperature check was added to determine if a cooldown is required.
3c 2) RNO	3b 2) RNO	MSIV bypass valves were deleted because valves are normally closed and there is no control or indication in the control room.
3f	3d	Since the steam supply header valves are local valves, the ERG step was rewritten to check if a motor-driven AFW pump is running. If not, and turbine-driven AFW pump is the only available source of feed, then an operator is dispatched to attempt to locally close steam supply header valves from ruptured SG(s) to turbine-driven AFW pump as necessary (i.e., if a ruptured steam generator is the source of steam). Skip space
Space 3g	-	Space The steam supply regulator valve was added since it could be closed from the control room.
3h	-	A step was added to close the steam traps upstream of the MSIVs and the MSIV bypass valves (even though the valves may already be closed).

1

1

IP2 STEP NO.	ERG STEP NO.	EXPLANATION OR BASIS FOR DIFFERENCE	
5b RNO	5b RNO	The ERG step was changed to verify block valve closed if PORVs can not be closed since block valves are normally closed during operation.	
-	5c	Block valves step was deleted since valves are normally closed during operation.	
6	6	The negative response was removed per Westinghouse recommendation and utility concurrence, with step being reworded appropriately.	
2nd CAUTION before Step 7	-	A caution addressing the potential for water hammer due to excessive AFW flow to intact SGs was added.	1
-	2nd CAUTION before Step 8	Caution was deleted due to system design having no BIT and SI aligned to take suction from the RWST.	1
2nd CAUTION before Step 8	-	The caution regarding automatic reinitiation of SI from Basic version of ERGs was used per utility request.	1
8	8	Added appropriate actions required for resetting SI and re-energizing all MOVs on MCC 26A and 26B.	
9	9	IP2 has a "daisy chain" design for its containment isolation valves. All valve switches must be in the closed position except for the IVSW switches, in order to reset the containment isolation signal. The design includes override key switches to reset Phases A and B in the unlikely event that the "daisy chain" circuit arrangement malfunctioned preventing a desired reset action even though the valves are closed.	1
CAUTION before Step 11	-	A caution regarding the diesel generator load limits was added.	
-	CAUTION before Step 14	Caution was deleted because there is no low steamline pressure SI setpoint in plant design.	

IP2 STEP NO.	ERG STEP NO.	EXPLANATION OR BASIS FOR DIFFERENCE	
CAUTION before Step 14	-	Caution was added to prevent main steamline isolation.	
14b	14b	Step was reworded to dump steam to establish required core exit temperature per utility request. This provides insight to the operator.	1
14b RNO	14b RNO	The use of the faulted SG to cooldown the RCS was rewritten for clarity.	
CAUTION before Step 15	-	A caution was added due to the plant specific design of the charging pump suction line being routed to an elevation above the pump and then back down over a wall which may cause cavitation of the pump (loop seal) if the pump was not previously running. This is monitored by first observing the level of the RWST.	1
16 RNO	16 RNO	Words were added to the RNO for continuing pressure decrease to clarify the requirements of transitioning to ECA-3.1.	
17	17	Hot leg wide range RTDs were used for subcooling because core exit TCs are not qualified.	
18b	18b	Hot leg wide range RTDs were used for subcooling because core exit TCs are not qualified.	
18c	18c	Isolating the auxiliary spray line requires local manual action so the contingency action was removed.	1
19	19	Step was rewritten to stress PRZR PORV flow path since a block valve will have to be opened along with a PORV to provide one available flow path.	
19a RNO	19a RNO	Plant specific means for establishing auxiliary spray were added.	

IP2 STEP NO.	ERG STEP NO.	EXPLANATION OR BASIS FOR DIFFERENCE
19b	19b	Hot leg wide range RTDs were used for subcooling because core exit TCs are not qualified.
21a	21a	Hot leg wide range RTDs were used for subcooling because core exit TCs are not qualified.
-	23	Step was deleted because SI pumps are aligned to the RWST during injection and the design having no BIT. 1
24	25	Hot leg wide range RTDs were used for subcooling because core exit TCs are not qualified.
Note before Step 28	-	Note was added per utility request to maintain SG level in the narrow range.
28b RNO	29b RNO	A block valve must also be used along with a PRZR PORV to provide a flow path if auxiliary spray can not be used.
-	2nd CAUTION before Step 25	Caution was deleted because there is no RTD bypass loop in plant design.
34a RNO	35a RNO	Hot leg wide range RTDs were used for subcooling because core exit TCs are not qualified.
1st CAUTION before Step 37	-	A caution was added per utility request as a reminder that an offsite dose calculation must be completed before transitioning to ES-3.2 or ES-3.3.
2nd CAUTION before Step 37	-	A caution was added per utility request so that the operations manager makes the decision as to what post-SGTR cooldown method should be used.

INDIAN POINT UNIT 2 EOP STEP DOCUMENTATION FORM

EOP No.: ES-3.1 Rev.: 0

Title: Post-SGRT Cooldown Using Backfill

Prepared by: R. J. Lopiccolo Date: 07/26/84

Reviewed by: R. R. Oft Date: 07/31/84

IP2 STEP NO.	ERG STEP NO.	EXPLANATION OR BASIS FOR DIFFERENCE
Cover Page	-	Adverse containment conditions were added to the cover page as a reminder to the operators.
2a	2a	Hot leg wide range RTDs were used for subcooling because the core exit TCs are not qualified.
2c RNO	2c RNO	An attempt should be made to locally close accumulator isolation valves before venting. Also plant specific means for venting the accumulators were added.
2d	-	Step was added to open accumulator isolation valve breakers after the valves are closed to lockout the accumulators.
NOTE before Step 3	-	A note was added to remind the operator to sample RCS boron concentration for adequate shutdown margin during the RCS cooldown and depressurization.
2nd CAUTION before Step 4	-	A caution addressing the potential for water hammer caused by excessive AFW flow to intact SGs was added.
5c RNO	5c RNO	The use of the faulted SG to cooldown the RCS was rewritten for clarity.
8a RNO	8a RNO	Plant specific means of using auxiliary spray were added. Also the use of a block valve and a PRZR PORV is required to establish a flow path if auxiliary spray can not be used.

IP2 STEP NO.	ERG STEP NO.	EXPLANATION OR BASIS FOR DIFFERENCE
8c	8c	Hot leg wide range RTDs were used for subcooling because the core exit TCs are not qualified.
Note before Step 9	-	POP 3.3 was referred to because the concern for total plant cooldown must be addressed. The ERGs only cover core conditions.

INDIAN POINT UNIT 2 EOP STEP DOCUMENTATION FORM

EOP No.: ES-3.2 Rev.: 0

Title: Post-SGTR Cooldown Using Blowdown

Prepared by: R. J. Lopiccolo Date: 07/26/84

Reviewed by: R. R. Oft Date: 07/31/84

Cover Page	-	Adverse containment conditions were added to the cover page as a reminder to the operator.
CAUTION before Step 1	-	A caution was added to remind the operator that the emergency plan requires an offsite dose calculation if an environmental release as possible.
2a	2a	Hot leg wide range RTDs were used for subcooling because the core exit TCs are not qualified.
2c RNO	2c RNO	An attempt should be made to locally close accumulator isolation valves before venting. Also plant specific means for venting the accumulators were added.
2d	-	Step was added to open breakers after accumulator isolation valves are closed to lock out accumulators.
NOTE before Step 3	-	A note was added to remind the operator to sample RCS boron concentration for adequate shutdown margin during the RCS cooldown and depressurization.
2nd CAUTION before Step 4	-	A caution addressing the potential for water hammer caused by excessive AFW flow intact SGs was added.
5b RNO	5b RNO	The use of the faulted SG to cooldown the RCS was rewritten for clarity.

IP2 STEP NO.	ERG STEP NO.	EXPLANATION OR BASIS FOR DIFFERENCE
6b RNO	6b RNO	Plant specific means of using auxiliary spray were added and the use of a block valve along with a PRZR PORV is required to establish a flow path if auxiliary spray can not be used.
Note before Step 7	-	POP 3.3 was referred to because the concern for total plant cooldown must be addressed. The ERGs only cover core conditions.
11a RNO	11a RNO	A PRZR PORV and block valve must be used to establish a flow path if auxiliary spray can not be used.
11d	11d	Hot leg wide range RTDs were used for subcooling because the core exit TCs are not qualified.
14c RNO	14c RNO	The use of the faulted SG to cooldown the RCS was rewritten for clarity.

INDIAN POINT UNIT 2 EOP STEP DOCUMENTATION FORM

EOP No.: ES-3.3 Rev.: 0

Title: Post-SGTR Cooldown Using Steam Dump

Prepared by: R. J. Lopiccolo Date: 07/26/84

Reviewed by: R. R. Oft Date: 07/31/84

IP2 STEP NO.	ERG STEP NO.	EXPLANATION OR BASIS FOR DIFFERENCE
Cover Page	-	Adverse containment conditions were added to the cover page as a reminder to the operators.
2a	2a	Hot leg wide range RTDs were used for subcooling because the core exit TCs are not qualified.
2c RNO	2c RNO	An attempt should be made to locally close accumulator isolation valves before venting. Also, plant specific means for venting the accumulators were added.
2d	-	Step was added to open breakers after accumulator isolation valves are closed to lock out accumulators.
NOTE before Step 3	-	A note was added to remind the operator to sample RCS boron concentration for adequate shutdown margin during the RCS cooldown and depressurization.
2nd CAUTION before Step 4	-	A caution was added addressing the potential for water hammer caused by excessive AFW flow to intact SGs. 1
5b RNO	5b RNO	The use of the faulted SG to cooldown the RCS was rewritten for clarity.
6b RNO	6b RNO	Plant specific means for establishing auxiliary spray were added along with using a PRZR PORV and block valve to establish a flow path if auxiliary spray can not be used.

IP2 STEP NO.	ERG STEP NO.	EXPLANATION OR BASIS FOR DIFFERENCE
Note before Step 7	Note before Step 7	Note was rewritten due to plant design preference of running a motor-driven AFW pump if the necessary power sources are available.
9	9	The BAT temperature portion of this step was deleted because the SI pumps are normally aligned to the RWST and not BAT.
14a RNO	14a RNO	The PRZR PORV block valve must also be used along with the PORV and heaters to maintain RCS pressure.
-	CAUTION before Step 15	Caution was deleted because there is no RTD bypass loop in plant design.
15	15	Hot leg wide range RTDs were used for subcooling because the core exit TCs are not qualified.
21	21	High-level step was changed to plant cooldown because of the need to consult the operations manager to determine if a natural circulation cooldown is required. Also the check on RCP status was deleted because if an RCP was running this procedure would not be in progress.

INDIAN POINT UNIT 2 EOP STEP DOCUMENTATION FORM

EOP No.: ECA-0.2 Rev.: 1

Title: Loss of All AC Power Recovery With SI Required

Prepared by: J. G. Del Percio Date: 01/16/87

Reviewed by: R. Redding Date: 01/20/87

IP2 STEP NO.	ERG STEP NO.	EXPLANATION OR BASIS FOR DIFFERENCE
Cover Page	-	Adverse containment conditions were added to the cover page as a reminder to the operator.
1	3	The thermal barrier isolation step was placed before the RWST level check because if level is below the switchover setpoint, the recirculation mode must be established per ES-1.3 (Step 2) which requires CCW thermal barrier isolation to be completed.
-	CAUTION before Step 2	Caution was deleted due to system design of having no BIT and SI pumps normally aligned to the RWST. 1
2 RNO	1 RNO	If recirculation mode is required, the system is aligned per ES-1.3 which also covers loading the equipment on the busses. In the ERGs, it is assumed only the recirculation valve alignment is performed and manual loading of the equipment is still required. Also, after recirculation is established, the transition to Step 5 skips over the manual loading step.

IP2 STEP NO.	ERG STEP NO.	EXPLANATION OR BASIS FOR DIFFERENCE
3	2	Step was rewritten since SI pumps are normally aligned to take suction for the RWST.
CAUTION before Step 4	-	A caution was added to stress the importance of getting a CCW pump started to establish cooling to the SI and RHR pumps.
4	4	Fan cooler units were deleted from this step and were added as new Step 5 because the RWST level step was changed to a transition to Step 5 if cold leg recirculation was established. (ES-1.3 only starts the pumps, it does nothing with fan coolers which is still essential equipment to be started.)
5	-	Reason given in Step 4 explanation.
3rd CAUTION before Step 6	-	A caution addressing the potential for water hammer caused by excessive AFW flow to intact SGs was added.
Note before Step 6	Note before Step 5	Note was rewritten due to plant design preference of running motor-driven AFW pumps instead of the turbine-driven AFW pumps if the necessary power sources are available.
7	6	Step was rewritten to check RWST level before placing containment spray pumps in AUTO because if level was inadequate and cold leg recirculation was established, the pump switches should NOT be placed in AUTO.

INDIAN POINT UNIT 2 EOP STEP DOCUMENTATION FORM

EOP No.: ECA-1.1 Rev.: 0

Title: Loss of Emergency Coolant Recirculation

Prepared by: K. J. Victor Date: 08/27/84

Reviewed by: R. R. Oft Date: 08/31/84

IP2 STEP NO.	ERG STEP NO.	EXPLANATION OR BASIS FOR DIFFERENCE
Cover Page	-	A new entry condition from ES-1.3 was added if an RHR recirculation path cannot be established. Adverse containment conditions were added to the cover page as a reminder to the operators.
1	1	The step of trying to restore necessary equipment was rewritten to address the validation finding of the operators not understanding the intent of the step. 11
3b RNO	3b RNO	The use of the faulted SG to cooldown the RCS if no intact SG is available was rewritten for clarity.
4	4	Step was changed to show the difference between IP2 plant design and reference plant design. The IP2 fan coolers have only one speed and on an SI signal are re-aligned through charcoal filters.
6	6	In the best estimate case with RWST level between 2 and 10.23 feet, a condition of two spray pumps are required when no fan coolers are running when containment pressure is between 2 and 47 psig. 11

IP2 STEP NO.	ERG STEP NO.	EXPLANATION OR BASIS FOR DIFFERENCE
-	7	Step was deleted due to plant design that the containment spray pumps can not be aligned for spray recirculation. Separate recirculation pumps (or RHR pumps) are used for spraying during recirculation.
2nd CAUTION before Step 7	-	The caution regarding automatic reinitiation of SI from Basic version of ERGs was used per utility request.
7	8	Added appropriate actions required for resetting SI and re-energizing all MOVs on MCC 26A and 26B.
9	10	Step emphasized to prevent backflow from RWST to containment sump. IP2 plant design has recirculation sump and containment sump.
12	13	Plant design has two RVLIS instrument range indications compared to the three ranges of the reference plant. The two RVLIS ranges cover the upper range as well. The natural circulation range and the RCP running range compare to full range and the dynamic head range of the reference plant respectively. The RVLIS natural circulation indication is used regardless of whether or not RCPs are running.
17	18	Same justification as Step 12.
18b RNO	19b RNO	An attempt should be made to locally close accumulator isolation valves before venting. Also, plant specific means for venting the accumulators were added.
18c	-	Step was added to open breakers after accumulator isolation valves were closed to lock out accumulators.
22b RNO	23b RNO	The use of the faulted SG to cooldown the RCS was rewritten for clarity.

INDIAN POINT UNIT 2 EOP STEP DOCUMENTATION FORM

EOP No.: ECA-1.2 Rev.: 0

Title: Loss of Emergency Coolant Recirculation

Prepared by: K. J. Victor Date: 08/27/84

Reviewed by: R. R. Oft Date: 08/31/84

IP2 STEP NO.	ERG STEP NO.	EXPLANATION OR BASIS FOR DIFFERENCE
Cover Page	-	Adverse coantainment conditions were added to the cover page as a reminder to the operators.
CAUTION	-	A caution was added warning against potential high radiaiton fields for attempting to close other valves to outside containment because these are local valves.
2, 3, 4	-	The standard IP2 steps were added to reset SI, containment isolation and to establish instrument air because they are required actions in order to perform Step 5.

INDIAN POINT UNIT 2 EOP STEP DOCUMENTATION FORM

EOP No.: ECA-2.1 Rev.: 1

Title: Uncontrolled Depressurization of All Steam Generators

Prepared by: J. G. Del Percio Date: 01/16/87

Reviewed by: R. Redding Date: 01/20/87

IP2 STEP NO.	ERG STEP NO.	EXPLANATION OR BASIS FOR DIFFERENCE	
Cover Page	-	Adverse containment conditions were added to the cover page as a reminder to the operators.	
4th CAUTION before Step 1	-	A caution warning against potential adverse local environmental conditions was added for attempting to close the steam supply header valves since these are local valves.	1 1
1	1	Steam supply header valves are local manual valves rather than motor-operated valves as in the reference plant; therefore, the step was rewritten to dispatch an operator to attempt to close the valves.	1 1
5b RNO	5b RNO	Block valves are normally closed during operation so step was changed to verify their closure.	
-	5c	Step deleted since block valves are normally closed.	
2nd CAUTION before Step 8	-	The caution regarding automatic reinitiation of SI from Basic version of ERGs was used per utility request.	1 1

IP2 STEP NO.	ERG STEP NO.	EXPLANATION OR BASIS FOR DIFFERENCE
-	2nd CAUTION before Step 9	Caution was deleted due to system design having no BIT and SI pumps normally aligned from the RWST.
8	9	Added appropriate actions required for resetting SI and re-energizing all MOVs on MCC 26A and 26B.
9	10	IP2 has a "daisy chain" design for their containment isolation valves. All valve switches must be in the closed position, except for the IVSW switches, in order to reset the containment isolation signal. The design includes override key switches to reset Phases A and B in the unlikely event that the "daisy chain" circuit arrangment malfunctions preventing a desired reset action even though the valves are closed.
11	6	The RHR stop step was moved after the SI reset step so Substep b (reset SI if necessary) could be eliminated. By doing this, there were no adverse effects on the pumps because they can run for long periods of time on recirculation flow without an overheating concern. Also, two of the cautions preceding Step 6 can be deleted since they also appear before the SI reset step. Only the caution monitoring RCS pressure is then required.
-	12	Step of offsite power available was deleted because the charging pump step was placed directly after the immediate actions of E-0. At this time, the pumps probably will already be running.
CAUTION before Step 12	-	A caution regarding the diesel generator load limits was added.
13c RNO	14c RNO	Eliminated part of the step to stabilize RCS pressure with PRZR spray because charging pumps are PD pumps and spraying to maintain pressure will not help to fill the PRZR.

IP2 STEP NO.	ERG STEP NO.	EXPLANATION OR BASIS FOR DIFFERENCE
-	15	Step was deleted because SI pumps are normally aligned to RWST.
18 RNO	20 RNO	The RNO column was changed to include a PRZR level check. If level is too low, letdown cannot be established.
22	26	RCP cooling step was moved before the RCP seal return flow for consistency throughout the procedures.
-	2nd CAUTION before Step 28	Caution was deleted due to plant design of no RTD bypass loop.
32c RNO	34c RNO	An attempt should be made to locally close accumulator isolation valves before venting. Also, plant specific means for venting the accumulators were added.
32d	-	Step was added to open breakers after acumulator isolation valves were closed to lock out accumulators.
Note before Step 33	-	POP 3.3 was referred to because the concern for total plant cooldown must be addressed. The ERGs only cover core conditions.

1

INDIAN POINT UNIT 2 EOP STEP DOCUMENTATION FORM

EOP No.: Foldout - ECA-2.1 Rev.: 0

Title: Foldout For ECA-2.1 Procedure

Prepared by: K. J. Victor Date: 08/27/84

Reviewed by: R. R. Oft Date: 08/31/84

IP2 STEP NO.	ERG STEP NO.	EXPLANATION OR BASIS FOR DIFFERENCE
1	1	Hot leg wide range RTDs were used for subcooling because the core exit TCs are not qualified.
5	2	The Red Path Summary was moved to the end of the page due to the validation finding of being the least important item on the foldout page.

INDIAN POINT UNIT 2 EOP STEP DOCUMENTATION FORM

EOP No.: ECA-3.1 Rev.: 1

Title: SGTR With Loss of Reactor Coolant - Subcooled Recovery Desired

Prepared by: J. G. Del Percio Date: 01/16/87

Reviewed by: R. Redding Date: 01/20/87

IP2 STEP NO.	ERG STEP NO.	EXPLANATION OR BASIS FOR DIFFERENCE
Cover Page B.3)	Cover Page B.3)	The transition to E-3 Step 13 is dependent upon the ruptured SG pressure being less than 400 psig since plant design does not have a low steamline SI setpoint.
Cover Page	-	Adverse containment conditions were added to the cover page as a reminder to the operators.
-	3rd CAUTION before Step 1	Caution was deleted due to system design of having no BIT and the SI pumps normally aligned to take suction from the RWST. 1
3rd CAUTION before Step 1	-	The caution regarding automatic reinitiation of SI from Basic version of ERGs was added per utility request. 1
1	1	Added appropriate actions required for resetting SI and re-energizing all MOVs on MCC 26A and 26B.
2	2	IP2 has a "daisy chain" design for its containment isolation valves. All valve switches must be in the closed position except for the IVSW switches in order to reset the containment isolation signal. 1 They do have override key switches to reset Phases A and B in the unlikely event that the "daisy chain" circuit malfuctions preventing a desired reset action even though the valves are closed. 1

IP2 STEP NO.	ERG STEP NO.	EXPLANATION OR BASIS FOR DIFFERENCE
CAUTION before Step 4	-	A caution addressing diesel generator load limits was added.
4b RNO	-	Step was deleted because the charging pumps should have been loaded in E-0.
CAUTION before Step 8	-	A caution was added due to the plant specific design of the charging pump suction line being routed to an elevation above the pump and then back down over a wall which may cause cavitation of the pump if RWST level is low (loop seal).
9	9	The negative response was removed per Westinghouse recommendation and utility concurrence with step being rewritten accordingly.
2nd CAUTION before Step 10	-	A caution regarding the potential for caused by excessive AFW flow to intact SGs was added.
-	2nd Note before Step 11	Note was deleted because there is no low steamline pressure SI signal.
11c RNO	11c RNO	The use of the faulted SG for RCS cooldown was rewritten for clarity.
12	12	Hot leg wide range RTDs were used for subcooling because the core exit TCs are not qualified.
14	14	Step was changed to cover both SI pumps running and RHR pumps injecting to cover the step looping arrangements for the SI reduction scheme. By adding the RHR pump criteria to Step 14, it eliminates adding the requirements in Steps 14, 15, 16, and 17.

IP2 STEP NO.	ERG STEP NO.	EXPLANATION OR BASIS FOR DIFFERENCE
16	16	Instruction was given to the operator to use maximum PRZR spray to depressurize the RCS. If not available, a PRZR block valve must also be used along with the PORV to establish the necessary flow path to depressurize. Also, plant specific means for establishing auxiliary spray were added.
-	2nd CAUTION before Step 17	Caution was deleted because there is no RTD bypass loop in plant design.
18, 19, 20	18	The ERG step of stopping one SI pump each time through the loop arrangement was broken down into three individual steps (one for stopping each pump) to satisfy the plant specific SI reduction scheme.
-	2nd CAUTION before Step 20	Caution was deleted because there is no RTD bypass loop in plant design.
26c RNO	24c RNO	An attempt should be made to locally close accumulator isolation valves before venting. Also, plant specific means for venting the accumulators were added.
26d	-	Step was added to open breakers after accumulator isolation valves were closed to lock out the accumulators.
31	32	Step which checks if RCPs must be stopped was moved after the seal return step so all the RCP checks could be done at the same time.
Note before Step 35	-	POP 3.3 is referred to because the concern for total plant cooldown must be addressed. The ERGs only cover the core conditions.

INDIAN POINT UNIT 2 EOP STEP DOCUMENTATION FORM

EOP No.: Foldout - ECA-3.1 Rev.: 0

Title: Foldout for ECA-3.1 Procedure

Prepared by: R. J. Lopiccolo Date: 09/10/84

Reviewed by: R. R. Oft Date: 09/14/84

IP2 STEP NO.	ERG STEP NO.	EXPLANATION OR BASIS FOR DIFFERENCE
1	1	Hot leg wide range RTDs were used for subcooling because the core exit TCs are not qualified.
5	2	The Red Path Summary was moved to the end of the page due to the validation finding of being the least important item on the foldout page.

INDIAN POINT UNIT 2 EOP STEP DOCUMENTATION FORM

EOP No.: ECA-3.2 Rev.: 0

Title: SGTR With Loss of Reactor Coolant - Saturated Recovery Desired

Prepared by: R. J. Lopiccolo Date: 09/10/84

Reviewed by: R. R. Oft Date: 09/14/84

IP2 STEP NO.	ERG STEP NO.	EXPLANATION OR BASIS FOR DIFFERENCE
Cover Page	-	Adverse containment conditions were added to the cover page as a reminder to the operator.
3	3	The negative response was removed per Westinghouse recommendation and utility concurrence and step was rewritten accordingly.
2nd CAUTION before Step 4	-	A caution addressing the potential for water hammer caused by excessive AFW flow to intact SGs was added. 1
-	2nd Note before Step 5	Note was deleted because there is no low steamline pressure SI signal in plant design.
5c RNO	5c RNO	The use of the faulted SG to cool down the RCS was rewritten for clarity.
6	6	Hot leg wide range RTDs were used for subcooling because the core exit TCs are not qualified.
7	7	Step was changed to cover both SI pumps running and RHR pumps injecting to cover the step looping arrangements for the SI reduction scheme. By adding the RHR pump criteria to Step 7, it eliminates adding the requirements in Steps 14, 15, 16, and 17.

IP2 STEP NO.	ERG STEP NO.	EXPLANATION OR BASIS FOR DIFFERENCE
9	9	Instruction was given to the operator to use maximum PRZR spray to depressurize the RCS. If not available, a PRZR block valve must also be used along with the PORV to establish the necessary flow path to depressurize. Also, plant specific means for establishing auxiliary spray were added.
-	2nd CAUTION before Step 10	Caution was deleted because there is no RTD bypass loop in plant design.
11, 12, & 13	11	The ERG step of stopping one SI pump each time through the loop arrangement was broken down into three individual steps (one for stopping each pump) to satisfy the plant specific SI reduction scheme.
14	12	Plant design has two RVLIS instrument range indications compared to the three ranges of the reference plant. The two RVLIS ranges cover the upper range as well. The natural circulation range and the RCP running range compare to the full range and the dynamic head range of the reference plant, respectively.
-	2nd CAUTION before Step 13	Caution was deleted because there is no RTD bypass loop in plant design.
16b RNO	14b RNO	The use of a PORV block valve in conjunction with the PORV is required to establish a flow path if auxiliary spray could not be used.
18b	16b	Plant design has two RVLIS instrument range indications compared to the three ranges of the reference plant. The two RVLIS ranges cover the upper range as well. The natural circulation range and the RCP running range compare to the full range and the dynamic head range of the reference plant, respectively.

IP2 STEP NO.	ERG STEP NO.	EXPLANATION OR BASIS FOR DIFFERENCE
19c RNO	17c RNO	An attempt should be made to locally close accumulator isolation valves before venting. Plant specific means for venting were also added.
19d	-	Step was added to open accumulator valve breakers after the valves are closed to lock out the accumulators.
24	25	RCP stop step was moved after the checks for seal cooling a seal return for consistency of having all RCP checks together.
Note before Step 28	-	POP 3.3 was referred to because the concern for total plant cooldown must be addressed. The ERGs only cover the core conditions.

INDIAN POINT UNIT 2 EOP STEP DOCUMENTATION FORM

EOP No.: ECA-3.3 Rev.: 0

Title: SGTR Without Pressurizer Pressure Control

Prepared by: R. J. Lopiccolo Date: 09/10/84

Reviewed by: R. R. Oft Date: 09/14/84

IP2 STEP NO.	ERG STEP NO.	EXPLANATION OR BASIS FOR DIFFERENCE
Cover Page	-	Adverse containment conditions were added to the cover page as a reminder to the operators.
3a RNO	3a RNO	Step was changed to read PRZR PORV flow path because a condition required to open a PORV is that the block valves also are powered and are capable of being opened.
2nd CAUTION before Step 5	-	A caution addressing the potential for water hammer caused by excessive AFW flow to intact SGs was added. 1
7c	7c	RVLIS full range indication was changed to natural circulation range due to plant design of having two RVLIS ranges. The two RVLIS ranges cover the upper range as well. 1
10	10	RVLIS full range indication was changed to natural circulation range regardless of whether the RCPs are running due to plant design of having two RVLIS ranges.
17	18	Steps 17 and 18 were switched around for consistency throughout the EOPs of having the RCP cooling step before the RCP seal return step.
21c RNO	21c RNO	An attempt should be made to locally close accumulator isolation valves before venting the accumulators. Also, plant specific means for venting were added to the procedure.

IP2 STEP NO.	ERG STEP NO.	EXPLANATION OR BASIS FOR DIFFERENCE
21d	-	Step was added to open accumulator isolation valve breakers after valves are closed to lock out accumulators.
24b RNO	24b RNO	If no intact SG is available, the use of the faulted SG to cool down the RCS was rewritten for clarity.
Note before Step 29	-	A note was added to consult the operations manager to determine which cooldown method is appropriate.
Note before Step 30	-	POP 3.3 was referred to because the concern for total plant cooldown must be addressed. The ERGs only cover the core conditions.
32c RNO	32c RNO	The use of faulted SG to cool down the RCS was rewritten for clarity.

INDIAN POINT UNIT 2 EOP STEP DOCUMENTATION FORM

EOP No.: Foldout - ECA-3.3 Rev.: 0

Title: Foldout for ECA-3.3 Procedures

Prepared by: R. J. Lopiccolo Date: 09/10/84

Reviewed by: R. R. Oft Date: 09/14/84

IP2 STEP NO.	ERG STEP NO.	EXPLANATION OR BASIS FOR DIFFERENCE
1	1	RVLIS full range indication was changed to natural circulation range regardless of whether the RCPs are running, due to plant design of having two RVLIS ranges.
4	2	The Red Path Summary was moved to the end of the page due to the validation finding of being the least important item on the foldout page.

INDIAN POINT UNIT 2 EOP STEP DOCUMENTATION FORM

EOP No.: Status Trees Rev.: 0

Title: Status Trees

Prepared by: K. J. Victor Date: 09/10/84

Reviewed by: R. R. Oft Date: 09/14/84

IP2 STEP NO.	ERG STEP NO.	EXPLANATION OR BASIS FOR DIFFERENCE
		Status tree format was changed to match the format of the SPDS since the goal is to put the status trees on the SPDS. Also, normal and adverse containment conditions were added where applicable.
F-0.4	F-0.4	Figure F04-2 was added to show the cold overpressure limit curve for determining RCS pressure from the status tree.

INDIAN POINT UNIT 2 EOP STEP DOCUMENTATION FORM

EOP No.: FR-S.1 Rev.: 1

Title: Response to Nuclear Power Generation/ATWS

Prepared by: J. D. Del Percio Date: 01/16/87

Reviewed by: R. Redding Date: 01/20/87

IP2 STEP NO.	ERG STEP NO.	EXPLANATION OR BASIS FOR DIFFERENCE
Cover Page	-	Adverse containment conditions were added to the cover page as a reminder to the operators.
1	1	Removed check of reactor trip bypass breakers tripped as a verification for reactor trip because these breakers are normally racked out, sufficient indications of reactor trip exist in the operators main panel area, and contingency actions to shut down the reactor are provided. 1 1
1 RNO	1 RNO	Added another contingency of de-energize/energize the busses to dump the MG sets because this can be done from the control room with minimal time constraints.
2	2	Turbine governor valve closure was added as an expected response.
2 RNO	2 RNO	Closing the MSIVs was moved before running back the turbine if the turbine will not trip because the MSIVs provide a more simple means of isolating steam from the turbine.
3b RNO	3b RNO	Since the steam supply valves to the turbine-driven AFW pump are local valves, step was rewritten to use the steam regulator valve and the steam supply speed control valve as necessary.
4	-	A new step was added to check if the reactor was subcritical before emergency boration was initiated. Submitted to ERG maintenance item No. DW-85-077. 1

IP2 STEP NO.	ERG STEP NO.	EXPLANATION OR BASIS FOR DIFFERENCE
CAUTION before Step 5	-	A caution was added due to the plant specific design of the charging pump suction line being routed to an elevation above the pump and then back down over a wall which may cause cavitation of the pump if RWST level is low (loop seal).
5b RNO	5b RNO	A contingency was added to align emergency boration path if normal boration can not be established. A second level contingency of using the SI pumps and depressurizing the RCS after low PRZR pressure SI was blocked was also added if a negative startup rate could not be achieved.
5c	5c	Step was changed to establish maximum charging per utility request.
5d RNO	5d RNO	Plant specific means for verifying containment isolation was added.
10	10	MSIV bypass valves were deleted because they are normally closed manually operated local valves. 1
CAUTION before Step 12	-	A caution warning against potential adverse local environmental conditions was added for attempting to close the steam supply header valves since these are local valves. 1
12	12	Since the steam supply valves to turbine-driven AFW pump are local valves, step was rewritten to attempt to close them depending upon environmental conditions.

INDIAN POINT UNIT 2 EOP STEP DOCUMENTATION FORM

EOP No.: FR-S.2 Rev.: 0

Title: Response to Loss of Core Shutdown

Prepared by: K. J. Victor Date: 08/10/84

Reviewed by: R. R. Oft Date: 08/17/84

IP2 STEP NO.	ERG STEP NO.	EXPLANATION OR BASIS FOR DIFFERENCE
Cover Page	-	Adverse containment conditions were added to the cover page as a reminder to the operators.

INDIAN POINT UNIT 2 EOP STEP DOCUMENTATION FORM

EOP No.: FR-C.1 Rev.: 0

Title: Response to Inadequate Core Cooling

Prepared by: K. J. Victor Date: 08/27/84

Reviewed by: R. R. Oft Date: 08/31/84

IP2 STEP NO.	ERG STEP NO.	EXPLANATION OR BASIS FOR DIFFERENCE
Cover Page	-	Adverse containment conditions were added to the cover page as a reminder to the operators.
3rd Note before Step 1	-	A note was added to alert the operator to manually restart the RHR pumps if RCS pressure should decrease to less than the shutoff head pressure of the pumps.
6	6	RVLIS full range indication was changed to natural circulation range due to plant design of having two RVLIS ranges.
8b	8b	Hydrogen concentration of 6% was changed to 4% because that is the setpoint for the recombiners.
8c RNO	8c RNO	The operations manager must make the decision of whether or not the hydrogen recombiners should be turned on.
-	10c	Block valve step was deleted because block valves are normally in the closed position during operation.
CAUTION before Step 11	-	A caution was added to prevent main steam-line isolation.
12b RNO	12b RNO	Plant specific means for venting the accumulators were added per utility request.
12c	-	Step was added to open the accumulator isolation valve breakers after the valves are closed to lock out the accumulators.

IP2 STEP NO.	ERG STEP NO.	EXPLANATION OR BASIS FOR DIFFERENCE
20	20	Same comment as Step 12.
23	23	RVLIS full range indication was changed to natural circulation range due to plant design of having two RVLIS ranges.

INDIAN POINT UNIT 2 EOP STEP DOCUMENTATION FORM

EOP No.: FR-C.2 Rev.: 0

Title: Response to Degraded Core Cooling

Prepared by: K. J. Victor Date: 09/10/84

Reviewed by: R. R. Oft Date: 09/14/84

IP2 STEP NO.	ERG STEP NO.	EXPLANATION OR BASIS FOR DIFFERENCE
Cover Page	-	Adverse containment conditions were added to the cover page as a reminder to the operators.
-	3c	Block valve check was deleted because valves are in closed position during operation.
5	5	RVLIS dynamic head range was changed to RCP running range due to plant design of having two RVLIS ranges.
7	7	RVLIS full range indication was changed to natural circulation range due to plant design of having two RVLIS ranges.
12b RNO	12b RNO	Plant specific means for venting the accumulators were added.
12c	-	Step was added to open accumulator isolation valve breakers when valves are closed to lock out accumulators.
16	16	High-level step was changed to isolating the accumulators because we also want to open the valve breakers after the valves are closed. Also, plant specific means for venting the accumulators were added as a contingency.

FR-C.2, Response to Degraded Core Cooling (cont.)

IP2 STEP NO.	ERG STEP NO.	EXPLANATION OR BASIS FOR DIFFERENCE
18	18	RVLIS full range indication was changed to natural circulation range due to plant design of having two RVLIS ranges.

INDIAN POINT UNIT 2 EOP STEP DOCUMENTATION FORM

EOP No.: FR-C.3 Rev.: 0

Title: Response to Saturated Core Cooling

Prepared by: D. D. Davis Date: 09/27/84

Reviewed by: R. R. Oft Date: 10/01/84

IP2 STEP NO.	ERG STEP NO.	EXPLANATION OR BASIS FOR DIFFERENCE
Cover Page	-	Adverse containment conditions were added to the cover page as a reminder to the operators.
1 RNO	1 RNO	An attempt to start an RHR pump was added before going to plant specific procedure for loss of RHR. Also, if a pump can be started, the plant specific procedure for RHR operation is referenced to verify proper valve alignment.
-	3c	Block valve check was deleted because valves are in the closed position during normal operation.

INDIAN POINT UNIT 2 EOP STEP DOCUMENTATION FORM

EOP No.: FR-H.1 Rev.: 1

Title: Response to Loss of Secondary Heat Sink

Prepared by: J. G. Del Percio Date: 01/16/87

Reviewed by: R. Redding Date: 01/20/87

IP2 STEP NO.	ERG STEP NO.	EXPLANATION OR BASIS FOR DIFFERENCE
Cover Page	-	Adverse containment conditions were added to the cover page as a reminder to the operators.
1st CAUTION before Step 1	-	The caution was expanded to include FR-P.1 because the same concern applies there also.
3rd CAUTION before Step 1	3rd CAUTION before Step 1	The caution was expanded to be more restrictive in that minimum feed flow must also be available to the non-faulted SG otherwise, feed flow to the faulted SG should be established.
2nd CAUTION before Step 4	-	The caution regarding automatic re-initiation of SI from Basic version of ERGs was added per utility request.
4b 1) RNO	4b 1) RNO	Added appropriate actions required for resetting SI and re-energizing all MOVs on MCC 26A and 26B.
-	4b 2) RNO	Step was deleted because FW isolation does not need to be reset to open the FW stop valves.
2nd Note before Step 6	-	A note was added to address the issue of SG depressurization may cause WP SI. The operator is informed that the loop in the procedure will handle this situation.

1

IP2 STEP NO.	ERG STEP NO.	EXPLANATION OR BASIS FOR DIFFERENCE
6a	-	A step was added to check if the condensate system is in service before depressurizing. Although this is also checked in Step 4, it was deemed necessary again in case it was lost.
6b RNO	6b RNO	A PORV block valve must also be used in conjunction with the PORV to provide the necessary flow path.
6a 2)	6a 2)	Plant specific means for using auxiliary spray were added.
-	6b	Low steamline pressure SI signal portion of step was deleted because that setpoint is not in plant design.
-	9	The step of actuating SI was deleted due to plant design of all the busses stripping on an SI signal and reloading. This transient on the plant is avoided by manually actuating Phase A and manually starting all SI pumps.
9	-	The step to actuate Phase A is required because Phase A will not be actuated automatically upon manual SI actuation and/or SI pump start.
10	-	Starting all SI pumps manually is accomplishing the ERG intent of actuating SI, yet avoids the transient on the plant associated with SI actuation (as explained above).
-	11,12,13	Resetting SI and Phase A is not required here because instrument air does not need to be established to operate the PRZR PORVs because they are nitrogen operated by plant design. The reset of SI will be done later in the procedure and Phase A and instrument air will be covered by transitioning to ES-1.1 at the end of this procedure. By eliminating them here, valuable time will be saved.
CAUTION before Step 12	-	A caution was added to block SI because opening the PRZR PORVs would decrease pressure below 1940 psig which would result in SI actuation.

IP2 STEP NO.	ERG STEP NO.	EXPLANATION OR BASIS FOR DIFFERENCE
12b	14b	The step was changed to open all PORV block valves because valves are normally in the closed position during operation.
CAUTION before Step 15	-	A caution was added addressing the diesel generator load limits for starting a charging pump.
-	17	Step was deleted because charging pumps will already be running because the step for checking the power supply and starting a pump was included in E-0.
CAUTION before Step 19	-	The caution regarding automatic re-initiation of SI from Basic version of ERGs was added per utility request.
19	-	Step was added to reset SI at this time because it is necessary to complete Step 20 since it was not done after bleed and feed. Also, appropriate actions required fo resetting SI and re-energizing all MOVs on MCC 26A and 26B were added.
20,21,22	22	The ERG step of stopping one SI pump each time through the loop arrangement was broken down into three individual steps (one for stopping each pump) to satisfy the plant specific SI reduction scheme.

INDIAN POINT UNIT 2 EOP STEP DOCUMENTATION FORM

EOP No.: FR-H.2 Rev.: 0

Title: Response to Steam Generator Overpressure

Prepared by: K. J. Victor Date: 09/27/84

Reviewed by: R. R. Oft Date: 10/01/84

IP2 STEP NO.	ERG STEP NO.	EXPLANATION OR BASIS FOR DIFFERENCE
Cover Page	-	Adverse containment conditions were added to the cover page as a reminder to the operators.
4	4	1) MSIV bypass valves were deleted because these are normally closed manually operated local valves. They will be covered in Step 8 only.
		2) Using the turbine-driven AFW pump is another means for dumping steam. The ERG steam supply header valves were deleted, however, because due to plant design, these valves are local and usually open, so starting the pump is sufficient.
		3) SG blowdown isolation valves were added as another means of dumping steam.

1

INDIAN POINT UNIT 2 EOP STEP DOCUMENTATION FORM

EOP No.: FR-H.3 Rev.: 0

Title: Response to Steam Generator High Level

Prepared by: D. D. Davis Date: 09/27/84

Reviewed by: R. R. Oft Date: 10/01/84

IP2 STEP NO.	ERG STEP NO.	EXPLANATION OR BASIS FOR DIFFERENCE	
Cover Page	-	Adverse containment conditions were added to the cover page as a reminder to the operators.	
2	2	Main boiler feed pumps tripped and main boiler feed pump discharge valve closure was added as an expected response for FW isolation.	
CAUTION before Step 5	-	A caution warning against potential adverse environmental conditions was added for attempting to close the steam supply header valves since these are manually operated local valves.	1 1
5	5	Step was rewritten to dispatch operator to attempt to close steam supply header valves because these are local valves.	
6	6	MSIV bypass valves were deleted from high level step because valves are manually operated local valves. Also, these valves are normally closed during plant operation.	1

INDIAN POINT UNIT 2 EOP STEP DOCUMENTATION FORM

EOP No.: FR-H.4 Rev.: 0

Title: Response to Loss of Normal Steam Release Capabilities

Prepared by: D. D. Davis Date: 09/27/84

Reviewed by: R. R. Oft Date: 10/01/84

IP2 STEP NO.	ERG STEP NO.	EXPLANATION OR BASIS FOR DIFFERENCE
Cover Page	-	Adverse containment conditions were added to the cover page as a reminder to the operators.

INDIAN POINT UNIT 2 EOP STEP DOCUMENTATION FORM

EOP No.: FR-H.5 Rev.: 0

Title: Response to Steam Generator Low Level

Prepared by: D. D. Davis Date: 09/27/84

Reviewed by: R. R. Oft Date: 10/01/84

IP2 STEP NO.	ERG STEP NO.	EXPLANATION OR BASIS FOR DIFFERENCE
Cover Page	-	Adverse containment conditions were added to the cover page as a reminder to the operators.
3	3	The negative response was deleted per Westinghouse recommendation and utility concurrence with step being rewritten accordingly.
CAUTION before Step 4	-	A caution addressing the potential for water hammer caused by excessive AFW flow to intact SGs was added.

1

INDIAN POINT UNIT 2 EOP STEP DOCUMENTATION FORM

EOP No.: FR-P.1 Rev.: 1

Title: Response to Imminent Pressurized Thermal Shock Condition

Prepared by: J. G. Del Percio Date: 01/16/87

Reviewed by: R. Redding Date: 01/20/87

IP2 STEP NO.	ERG STEP NO.	EXPLANATION OR BASIS FOR DIFFERENCE
Cover Page	-	Adverse containment conditions were added to the cover page as a reminder to the operators.
1st CAUTION before Step 1	-	A caution was added addressing the source of feed flow to the turbine-driven AFW pump because in Step 1 RNO there is a step of isolating the faulted SG so if the turbine-driven AFW pump is the only source of feed, the caution is needed.
2nd CAUTION before Step 1	-	A caution was added to alert the operator that a transition to FR-H.1 is required only if minimum feed flow capability is lost.
1c RNO	1c RNO	MSIV bypass valves were deleted because they are normally closed manually operated local valves. 1
2	2	High-level step was rewritten to check if power is available to the block valves because of plant design of the block being normally closed during operation. Therefore, the check for one block valve open can be deleted.
3a RNO	3a RNO	A block valve was also opened to provide the necessary flow path.

IP2 STEP NO.	ERG STEP NO.	EXPLANATION OR BASIS FOR DIFFERENCE
5 (first bullet)	5 (first bullet)	RCS subcooling was changed to check RCS pressure on the subcooling curves. The standard subcooling tables used throughout the rest of the EOPs are too restrictive here because of the large subcooling errors. Curves are more beneficial.
5 (second bullet)	5 (second bullet)	Plant design has two RVLIS instrument range indications compared to the three ranges of the reference plant. The natural circulation range and the RCP running range cover the full range and the dynamic head range of the reference plant, respectively.
2nd CAUTION before Step 6	-	The caution regarding automatic reinitiation of SI from Basic version of ERGs was added per utility request.
6	6	Added appropriate actions required for resetting SI and re-energizing all MOVs on MCC 26A and 26B.
7	7	IP2 has a "daisy chain" design for its containment isolation valves. All valve switches must be in the closed position (except for the IVSW switches) in order to reset the containment isolation signal. They do have override key switches to reset Phases A and B in the unlikely event that the "daisy chain" circuit malfunctioned, potentially preventing a desired reset action, even though the valves are closed.
-	10	Step was deleted because SI pumps are manually aligned to RWST and there is no BIT in the design.

IP2 STEP NO.	ERG STEP NO.	EXPLANATION OR BASIS FOR DIFFERENCE
11 (first bullet)	12 (first bullet)	RCS subcooling was changed to check RCS pressure on the subcooling curves. The standard subcooling tables used throughout the rest of the EOPs are too restrictive here because of the large subcooling errors. Curves are more beneficial.
11 (second bullet)	12 (second bullet)	Plant design has two RVLIS instrument range indications compared to the three ranges of the reference plant. The natural circulation range and the RCP running range covers full range and the dynamic head range of the reference plant, respectively.
13b RNO	14b RNO	An attempt should be made to locally close the accumulator isolation valves before venting. Also, plant specific means for venting were added.
13c	-	Accumulator isolation valve breakers should be opened after the isolation valves are closed to lock out the accumulators.
14a RNO	15a RNO	A block valve must be used along with a PORV if PRZR spray can not be used. Also, plant specific means for auxiliary spray were added.
14b	15b	RCS subcooling was changed to check RCS pressure on the subcooling curves. The standard subcooling tables used throughout the rest of the EOPs are too restrictive here because of the large subcooling errors. Curves are more beneficial.
20a RNO	21a RNO	A block valve must be used along with a PORV if auxiliary spray can not be used.
14a	-	A step was added to determine the target pressure for depressurization from the appropriate figure. This was added to prevent the operator from overshooting the desired pressure once depressurization is underway.

1 4

IP2 STEP NO.	ERG STEP NO.	EXPLANATION OR BASIS FOR DIFFERENCE
21	22	RCS subcooling was changed to check RCS pressure on the subcooling curves. The standard subcooling tables used throughout the rest of the EOPs are too restrictive here because of the large subcooling errors. Curves are more beneficial.

INDIAN POINT UNIT 2 EOP STEP DOCUMENTATION FORM

EOP No.: FR-P.2 Rev.: 1

Title: Response to Anticipated Pressurized Thermal Shock Condition

Prepared by: J. G. Del Percio Date: 01/16/87

Reviewed by: R. Redding Date: 01/20/87

IP2 STEP NO.	ERG STEP NO.	EXPLANATION OR BASIS FOR DIFFERENCE
Cover Page	-	Adverse containment conditions were added to the cover page as a reminder to the operators.
CAUTION before Step 1	-	A caution was added addressing the source of feed flow to the turbine-driven AFW pump because in Step 1 RNO there is a step of isolating the faulted SG so if the turbine-driven AFW pump is the only source of feed, the caution is needed.
1c RNO	1c RNO	MSIV bypass valves were deleted because they are normally closed manually operated local valves.
3 RNO	3 RNO	Plant specific means for auxiliary spray were added. Also, if auxiliary spray can not be established, a PRZR PORV block valve must be used in conjunction with a PORV to provide the necessary flow path.

1

INDIAN POINT UNIT 2 EOP STEP DOCUMENTATION FORM

EOP No.: FR-Z.1 Rev.: 0

Title: Response to High Containment Pressure

Prepared by: K. J. Victor Date: 09/27/84

Reviewed by: R. R. Oft Date: 10/01/84

IP2 STEP NO.	ERG STEP NO.	EXPLANATION OR BASIS FOR DIFFERENCE
Cover Page	-	Adverse containment conditions were added to the cover page as a reminder to the operators.
1	1	Isolation valve seal water system valves were added due to system design to provide secondary means of isolating containment due to geographic location.
3b	-	A step was added to check RWST level due to plant design of the containment spray pumps being aligned to the RWST and separate recirculation pumps that are capable of providing spray from the recirculation sump.
4	4	Step was changed to reflect the difference between plant design and the reference plant design. The IP2 fan coolers have only one speed and on an SI signal, fan coolers are re-aligned through charcoal filters.
5	5	MSIV bypass valves were deleted because they are normally closed manually operated local valves.
7c RNO	7c RNO	Due to utility concern of using the hydrogen recombiner system, the operations manager should be consulted.

IP2 STEP NO.	ERG STEP NO.	EXPLANATION OR BASIS FOR DIFFERENCE
10b	10b	Due to utility concern of using the hydrogen recombiner system, the operations manager should be consulted.

INDIAN POINT UNIT 2 EOP STEP DOCUMENTATION FORM

EOP No.: FR-Z.2 Rev.: 0

Title: Response to Containment Flooding

Prepared by: K. J. Victor Date: 09/27/84

Reviewed by: R. R. Oft Date: 10/01/84

IP2 STEP NO.	ERG STEP NO.	EXPLANATION OR BASIS FOR DIFFERENCE
Cover Page	-	Adverse containment conditions were added to the cover page as a reminder to the operators.
Note before Step 1	-	A note was added to reference an abnormal plant procedure in conjunction with this procedure for additional containment flooding considerations.

INDIAN POINT UNIT 2 EOP STEP DOCUMENTATION FORM

EOP No.: FR-Z.3 Rev.: 0

Title: Response to High Containment Radiation Level

Prepared by: K. J. Victor Date: 09/27/84

Reviewed by: R. R. Oft Date: 10/01/84

IP2 STEP NO.	ERG STEP NO.	EXPLANATION OR BASIS FOR DIFFERENCE
Cover Page	-	Adverse containment conditions were added to the cover page as a reminder to the operators.
2	2	Step was rewritten to relate to plant design of the containment fan coolers being aligned through charcoal filters on an SI signal. This provides the necessary containment atmosphere filtration.
3	-	A new step was added to start the iodine filter and fan units for containment atmosphere filtration.

1 1

INDIAN POINT UNIT 2 EOP STEP DOCUMENTATION FORM

EOP No.: FR-I.1 Rev.: 0

Title: Response to High Pressurizer Level

Prepared by: K. J. Victor Date: 09/27/84

Reviewed by: R. R. Oft Date: 10/01/84

IP2 STEP NO.	ERG STEP NO.	EXPLANATION OR BASIS FOR DIFFERENCE
Cover Page	-	Adverse containment conditions were added to the cover page as a reminder to the operators.
2c 9) RNO	2c 9) RNO	The transition from this step to checking PRZR pressure (Step 5) was changed to checking if seal return flow should be established (Step 4) because seal flow should be established even if there isn't sufficient flow to cool the regenerative heat exchanger.
5a RNO	5a RNO	A PRZR PORV block valve must be used along with the PORV to provide the necessary flow path if PRZR pressure is greater than 2335 psig.
8b RNO	8b RNO	There is no way to isolate the auxiliary spray line due to plant design so portion of step was deleted.

INDIAN POINT UNIT 2 EOP STEP DOCUMENTATION FORM

EOP No.: FR-I.2 Rev.: 0

Title: Response to Low Pressurizer Level

Prepared by: K. J. Victor Date: 09/27/84

Reviewed by: R. R. Oft Date: 10/01/84

IP2 STEP NO.	ERG STEP NO.	EXPLANATION OR BASIS FOR DIFFERENCE
Cover Page	-	Adverse containment conditions were added to the cover page as a reminder to the operators.

INDIAN POINT UNIT 2 EOP STEP DOCUMENTATION FORM

EOP No.: FR-I.3 Rev.: 0

Title: Response to Voids in Reactor Vessel

Prepared by: K. J. Victor Date: 09/27/84

Reviewed by: R. R. Oft Date: 10/01/84

IP2 STEP NO.	ERG STEP NO.	EXPLANATION OR BASIS FOR DIFFERENCE
Cover Page	-	Adverse containment conditions were added to the cover page as a reminder to the operators.
4b RNO	4b RNO	Plant specific means for auxiliary spray were added.
6a	6a	Tech spec cooldown and heatup curves were added for convenience to the operator in checking RCS pressure.
8	8	RVLIS upper range indication was changed to natural circulation range due to the plant design of having two RVLIS ranges.
9a	9a	Hot leg wide range RTDs were used for subcooling because the core exit TCs are not qualified.
9a RNO	9a RNO	Words were added to attempt to establish conditions for starting an RCP before transitioning to Step 12.
10	10	An attachment was added for checking if the upper head is full due to the RVLIS plant design.
13a	13a	A PRZR PORV block valve must be used in conjunction with a PORV to provide the necessary flow path if auxiliary spray can not be used.

IP2 STEP NO.	ERG STEP NO.	EXPLANATION OR BASIS FOR DIFFERENCE
15c	15c	Hot leg wide range RTDs were used for subcooling because the core exit TCs are not qualified.
16	16	Substep c was added to include a power supply for the reactor vent valves.
18	18	Hot leg wide range RTDs were used for subcooling because the core exit TCs are not qualified.
19	19	Reactor vent path step was changed to reflect the plant design of having only one vent path with two vent valves in series.

INDIAN POINT UNIT 2 EOP STEP DOCUMENTATION FORM

EOP No.: Foldout - E-3 Series Rev.: 0

Title: Foldout for E-3 Series Procedures

Prepared by: K. J. Victor Date: 07/26/84

Reviewed by: R. R. Oft Date: 07/31/84

IP2 STEP NO.	ERG STEP NO.	EXPLANATION OR BASIS FOR DIFFERENCE
1	1	Hot leg wide range RTDs were used for subcooling because core exit TCs are not qualified.
5	2	The Red Path Summary was moved to the end of the page due to the validation finding of being the least important item on the foldout page.

INDIAN POINT UNIT 2 EOP STEP DOCUMENTATION FORM

EOP No.: ECA-0.0 Rev.: 1

Title: Loss of All AC Power

Prepared by: J. G. Del Percio Date: 01/10/87

Reviewed by: R. Redding Date: 01/13/87

IP2 STEP NO.	ERG STEP NO.	EXPLANATION OR BASIS FOR DIFFERENCE	
Cover Page	-	Adverse containment conditions were added to the cover page as a reminder to the operators.	
1	1	Removed check of reactor trip bypass breakers tripped as a verification for reactor trip because these breakers are normally racked out, sufficient indications of reactor trip exist in the operator's main panel area and contingency actions to shut down the reactor are provided. Also removed rod bottom lights and rod position indicators because without AC power, these will not be available.	1
2	2	Turbine governor valves were added as an expected response. Contingency actions were added for manually tripping the turbine. If the stop valves can not be closed, then the MSIVs are to be shut to stop steaming to the turbine. A third contingency of running back the turbine was also added.	
3	3	To check if the RCS is isolated, there is one letdown isolation valve (LCV-459) and one excess letdown isolation valve (HCV-123).	
4	4	Per utility request and good human engineering practices, the RNO column was broken up with the verify statements being moved to the expected response column for consistency. Also, there is no automatic emergency alignment; valves must be positioned manually.	1
5	-	Step was added to verify a generator trip.	

IP2 STEP NO.	ERG STEP NO.	EXPLANATION OR BASIS FOR DIFFERENCE
CAUTION before Step 6	-	A caution regarding the diesel generator load limits was added.
6	5	In trying to restore power to a bus, the step was rewritten to first check if a diesel is running. If it is running but an ac 480V bus can not be energized, the concern for diesel cooling becomes a problem so the operator is instructed to trip the diesel and blackstart the gas turbine to attempt to energize a bus. Once a bus can be energized, a service water pump can be started to satisfy the diesel cooling concern and a diesel can be restarted.
3rd CAUTION before Step 7	3rd CAUTION before Step 6	The caution was rewritten to stress the importance of providing cooling to the diesel generators.
8	7	Step was rewritten to check if 480V switchgear and cabling is available once there is a power supply before transitioning to A-27.1.9. At the present time, A-27.1.9 is the only available plant procedure to attempt to locally restore ac power.
11a	10a	MSIV bypass valves were deleted because they are local valves with no control from the control room.
2nd CAUTION before Step 12	-	A caution warning against potential adverse environmental conditions was added for attempting to close the steam supply header valves since these are local valves.
12	11	The negative response was removed per Westinghouse recommendation and utility concurrence, with step being rewritten accordingly.

ECA-0.0, Loss of All AC Power (cont.)

IP2 STEP NO.	ERG STEP NO.	EXPLANATION OR BASIS FOR DIFFERENCE
13	12	The negative response was removed per Westinghouse recommendation and utility concurrence, with step being rewritten accordingly.
16 RNO	15 RNO	City water is the only available alternate water supply to the AFW pumps.
CAUTION before Step 19	-	The caution regarding automatic reinitiation of SI from Basic version of ERGs was added per utility request. 1
Note before Step 19	Note before Step 18	The part of the note stating SI actuation will result from SG depressurization is left in because it is needed to verify Phase A isolation. The resetting of SI is covered in Step 19b, so it is not needed here.
19b	18b	Added appropriate actions required for resetting SI and re-energizing all MOVs on MCC 26A and 26B.
20	19	Isolation valve seal water system valves were added due to system design to provide secondary means of isolating containment due to geographic location.
26 & 27	25 & 26	These two steps were reversed per utility request, in order to have a service water pump running to address the diesel cooling concern as soon as possible.
27	25	Communications was deleted from equipment loaded on ac 480V busses because it is loaded on the battery chargers which, in turn, are loaded on the busses.
28a	-	Hot leg wide range RTDs were used for subcooling because the core exit TCs are not qualified.
28c	27c	The negative response for SI equipment was deleted with c RNO and substep d being rewritten accordingly.

INDIAN POINT UNIT 2 EOP STEP DOCUMENTATION FORM

EOP No.: ECA-0.1 Rev.: 1

Title: Loss of All AC Power Recovery Without SI Required

Prepared by: J. G. Del Percio Date: 01/16/87

Reviewed by: R. Redding Date: 01/20/87

IP2 STEP NO.	ERG STEP NO.	EXPLANATION OR BASIS FOR DIFFERENCE
Cover Page	-	Adverse containment conditions were added to the cover page as a reminder to the operator.
1b RNO	1b RNO	There is no motor-operated CCW return isolation valve inside containment in plant design. If RCP thermal barrier CCW return isolation valve outside containment can not be closed, the only alternative is to close the CCW return flow control valve outside containment.
CAUTION before Step 3	-	A caution was added due to the plant specific design of the charging pump suction line being routed to an elevation above the pump and then back down over a wall which may cause cavitation of the pump if RWST level is low (loop seal).
3b	3b	CCW valves are all manual valves so a loss of ac power wouldn't swap valve positions, so all that is needed is to start a CCW pump.
5a	5a	Hot leg wide range RTDs were used for subcooling because the core exit TCs are not qualified.
3rd CAUTION before Step 7	-	A caution addressing the potential for water hammer caused by excessive AFW flow to the intact SGs was added.

1

IP2 STEP NO.	ERG STEP NO.	EXPLANATION OR BASIS FOR DIFFERENCE
Note Before Step 7	-	POP 3.3 was referred to because the concern for total plant cooldown must be addressed. The ERGs only cover core conditions.
9	9	Instruction was given for dumping steam to the condenser because MSIV bypass valves are manually operated local valves.
11a RNO	11a RNO	A PRZR PORV and block valve must be used to establish a flow path if auxiliary spray can not be used.
11d	11d	Hot leg wide range RTDs were used for subcooling because the core exit TCs are not qualified.
14c RNO	14c RNO	The use of the faulted SG to cooldown the RCS was rewritten for clarity.

Attachment 3

Design Difference and Generic Analysis
Applicability Evaluations

Consolidated Edison Company of New York, Inc.
Indian Point Unit No. 2
February , 1987

INDIAN POINT 2 PLANT DESIGN DIFFERENCES

AND GENERIC ANALYSIS APPLICABILITY

REV. 1

FEBRUARY 1987

INDIAN POINT 2 PLANT DESIGN DIFFERENCES AND GENERIC ANALYSIS APPLICABILITY

TABLE OF CONTENTS

SUBJECT	PAGE
1. INTRODUCTION	2
2. COMPARISON OF SYSTEM DESIGNS	3
3. DISCUSSION OF ANALYSES	12
4. BASIS FOR USING THE GENERIC WESTINGHOUSE ERGs	13
5. METHOD FOR DEVELOPING EOPs FROM ERGs	14
6. CONCLUSION	17
APPENDIX A - COMPARISON OF SYSTEM DESIGNS	18
APPENDIX B - APPLICABILITY OF ERG ANALYSES TO THE INDIAN POINT 2 PLANT	34
APPENDIX C - ERGs, REVISION 1 LISTING	55
APPENDIX D - EOP STEP DOCUMENTATION FORM	58
APPENDIX E - WOG LP REFERENCE PLANT DESCRIPTION	59
APPENDIX F - LIST OF INDIAN POINT 2 SYSTEM DESCRIPTIONS	60

1. INTRODUCTION

The development of plant-specific technical guidelines is one of the four elements of the Procedures Generation Package, which is required by NUREG-0899 and Supplement 1 to NUREG-0737. For the Indian Point 2 Plant, the generic Westinghouse Emergency Response Guidelines (ERGs), Revision 1 is used as the basis for writing the plant specific Emergency Operating Procedures (EOPs).

This document describes the method of developing plant specific EOPs from the generic Westinghouse ERGs for the Indian Point 2 Plant. Also, plant specific information for the Indian Point 2 plant, which highlights differences from the generic Westinghouse ERGs, is included in this document.

2. COMPARISON OF SYSTEM DESIGNS

During the development of the generic Westinghouse Emergency Response Guidelines (ERGs), a generic reference plant design configuration was assumed, and the technical content included in the ERGs is based upon the reference plant design. The following systems are included in the reference plant:

- Reactor Trip Actuation System
- ESF Actuation System
- Nuclear Instrumentation System
- Control Rod Instrumentation System
- Containment Instrumentation System
- Reactor Coolant System
- Chemical & Volume Control System
- Safety Injection System
- Residual Heat Removal System
- Radiation Monitoring System
- Containment Spray System
- Containment Atmosphere Control System
- Component Cooling Water System
- Service Water System
- Main Feedwater and Condensate System
- Main Steam System
- Auxiliary Feedwater System
- Steam Generator Blowdown System
- Sampling System
- Spent Fuel Storage and Cooling System
- Control Rod Drive Mechanism Cooling System
- Control Rod Control System
- Turbine Control System
- Electric Power System
- Pneumatic Power System

2. COMPARISON OF SYSTEM DESIGNS (Cont.)

To aid in the development of the plant specific EOPs for the Indian Point 2 plant, a comparison of the above systems from an emergency operations perspective for the Indian Point 2 and reference plant was made. This comparison was done in a systematic and complete manner by reviewing all of the above systems. The purpose of the comparison was to identify areas of the Indian Point 2 plant which are different from the reference plant from the standpoint of emergency system operations, and thus these areas are explicitly considered and included as appropriate during the development of the Indian Point 2 EOPs. The source documents, which were utilized to perform this comparison, were the WOG Low-Pressure Reference Plant Description and the Indian Point 2 Plant System Descriptions. The Low-Pressure Reference Plant Description provides a description of the reference plant design configuration upon which the generic Westinghouse ERGs (low-pressure version) were based, while the Indian Point 2 System Descriptions describe the Indian Point 2 plant design. A copy of the Low-Pressure Reference Plant Description is presented in Appendix E. A list of the Indian Point 2 System Descriptions which were used is included in Appendix F.

Appendix A was developed to provide a detailed comparison of each system based upon its use in the ERGs. Appendix A should be referred to during the following comparison of each system. The term "same" used in Appendix A indicates that from the standpoint of emergency system operations the specific design feature for Indian Point 2 and the reference plant are the same on a functional level, i.e., when writing the Indian Point 2 EOPs no change to the structure or operational recovery strategy of the generic ERGs is required and thus, these differences are not safety significant. However, differences on the component level may require modifications to be made to particular steps in the generic ERGs in order to properly reflect the Indian Point 2 detailed plant design and accomplish the intent of that particular generic ERG step. In these cases, the Indian Point 2 plant specific information must be included in the EOPs. These differences are not considered to be safety significant as defined in SRP 13.5.2. The comparison for each system follows.

2. COMPARISON OF SYSTEM DESIGNS (Cont.)

REACTOR TRIP ACTUATION SYSTEM

The function of the Reactor Trip Actuation System (RTAS) is to monitor specified process parameters and equipment status and to actuate reactor trip if conditions exceed specified limits. From the standpoint of emergency operations, the RTAS is the same for the Indian Point 2 and reference plant.

ESF ACTUATION SYSTEM

The function of the ESF Actuation System (ESFAS) is to monitor specified process parameters and to actuate engineered safety features (ESF) operation if conditions exceed specified limits. From the standpoint of emergency operations, the ESFAS is the same for the Indian Point 2 and reference plant except for the feedwater isolation signal reset and the main steamline isolation signal block as shown in Appendix A. The reset block function associated with Safety Injection Actuation (which cause feedwater and main steamline isolation) is sufficient to accomplish the operationaly recovery strategy of the ERGs.

NUCLEAR INSTRUMENTATION SYSTEM

The function of the Nuclear Instrumentation System (NIS) is to monitor and display the reactivity state of the reactor core. From the standpoint of emergency operations, the NIS is the same for the Indian Point 2 and reference plant.

CONTROL ROD INSTRUMENTATION SYSTEM

The function of the Control Rod Instrumentation System (CRIS) is to monitor and display the position of the reactor core control rods. From the standpoint of emergency operations, the CRIS is the same for the Indian Point 2 and reference plant.

2. COMPARISON OF SYSTEM DESIGNS (Cont.)

CONTAINMENT INSTRUMENTATION SYSTEM

The function of the Containment Instrumentation System (CIS) is to monitor the environmental condition and isolation status of the containment. From the standpoint of emergency operations, the CIS is the same for the Indian Point 2 and reference plant except for the additional sump level instrumentation as shown in Appendix A..

REACTOR COOLANT SYSTEM

The function of the Reactor Coolant System (RCS) is to transfer heat from the reactor core to the main steam system or residual heat removal system and to provide a barrier against the release of reactor coolant or radioactive material to the containment environment. From the standpoint of emergency operations, the RCS is the same for the Indian Point 2 and reference plant with the exception of the RTD bypass, RVLIS, and the core exit thermocouples as shown in Appendix A.

CHEMICAL AND VOLUME CONTROL SYSTEM

The function of the Chemical and Volume Control System (CVCS) system is to provide coolant to the reactor coolant system and to provide reactivity control for normal operations and any event that does not require engineered safety features operation. From the standpoint of emergency operations, the CVCS is the same for the Indian Point 2 and reference plant.

SAFETY INJECTION SYSTEM

The function of the Safety Injection System (SIS) is to provide coolant to the reactor coolant system and to introduce negative reactivity or restrict the addition of positive reactivity for events that require engineered safety features operation. From the standpoint of emergency operations, the SIS is the same for the Indian Point 2 and reference plant except for Subsystem B as shown in Appendix A.

2. COMPARISON OF SYSTEM DESIGNS (Cont.)

RESIDUAL HEAT REMOVAL SYSTEM

The function of the Residual Heat Removal System (RHRS) is to remove residual heat from the reactor coolant system during plant shutdown operations at low reactor coolant system pressures. From the standpoint of emergency operations, the RHRS is the same for the Indian Point 2 and reference plant.

RADIATION MONITORING SYSTEM

The function of the Radiation Monitoring System (RMS) is to monitor the radiation levels in specified process systems and specified areas internal and external to the plant. From the standpoint of emergency operations, the RMS is the same for the Indian Point 2 and reference plant.

CONTAINMENT SPRAY SYSTEM

The function of the Containment Spray System (CSS) is to provide containment pressure suppression and airborne fission product removal for events that require engineered safety features actuation. From the standpoint of emergency operations, the CSS is the same for the Indian Point 2 and reference plant except for the recirculation pumps as shown in Appendix A.

CONTAINMENT ATMOSPHERE CONTROL SYSTEM

The function of the Containment Atmosphere Control System (CACS) is to provide containment heat removal and combustible gas mixture control. The Indian Point 2 design is different from the reference plant as shown in Appendix A and these differences are incorporated in the EOPs with the exception of the post accident containment vent system.

2. COMPARISON OF SYSTEM DESIGNS (Cont.)

AUXILIARY FEEDWATER SYSTEM

The function of the Auxiliary Feedwater System (AFS) is to provide coolant to the secondary side of the steam generators during plant shutdown operations and for events that require engineered safety features operations. From the standpoint of emergency operations, the AFS is the same for the Indian Point 2 and reference plant.

MAIN STEAM SYSTEM

The function of the Main Steam System (MSS) is to provide controlled heat removal from the reactor coolant system via the steam generators. From the standpoint of emergency operations, the MSS is the same for the Indian Point 2 and reference plant with the exception of the manaul bypass valves and manual steam supply header valves to the turbine-driven AFW pump as shown by the comparison given in Appendix A.

COMPONENT COOLING WATER SYSTEM

The function of the Component Cooling Water System (CCWS) is to provide heat removal from system process and equipment via an intermediate closed-loop system. From the standpoint of emergency operations, the CCWS is the same for the Indian Point 2 and reference plant with the exception of the auxiliary component cooling pumps as shown in Appendix A.

SERVICE WATER SYSTEM

The function of the Service Water System (SWS) is to provide heat removal from system processes and equipment to the ultimate heat sink via an open-loop system. From the standpoint of emergency operations, the SWS is the same for the Indian Point 2 and reference plant.

2. COMPARISON OF SYSTEM DESIGNS (Cont.)

MAIN FEEDWATER AND CONDENSATE SYSTEM

The function of the Main Feedwater and Condensate System (MFCS) is to provide water to the secondary side of the steam generators during plant power operations. From the standpoint of emergency operations, the MFCS is the same for the Indian Point 2 and reference plant.

STEAM GENERATOR BLOWDOWN SYSTEM

The function of the Steam Generator Blowdown System (SGBS) is to provide letdown from the secondary side of the steam generators. From the standpoint of emergency operations, the Indian Point 2 design is the same as the reference plant.

SAMPLING SYSTEM

The function of the Sampling System (SS) is to provide a means for sampling process systems. From the standpoint of emergency operations, the Indian Point 2 design is the same as the reference plant.

SPENT FUEL STORAGE AND COOLING SYSTEM

The function of the Spent Fuel Storage and Cooling System (SFSCS) is to control fuel storage positions to ensure a subcritical geometric configuration and to provide heat removal to maintain stored fuel within specified temperature limits. From the standpoint of emergency operations, the Indian Point 2 design is the same as the reference plant.

CONTROL ROD DRIVE MECHANISM COOLING SYSTEM

The function of the Control Rod Drive Mechanism Cooling System (CRDMCS) is to provide heat removal from the control rod drive mechanisms. From the standpoint of emergency operations, the Indian Point 2 design is the same as the reference plant.

2. COMPARISON OF SYSTEM DESIGNS (Cont.)

CONTROL ROD CONTROL SYSTEM

The function of the Control Rod Control System (CRCS) is to control the position of the control rods in the reactor core. From the standpoint of emergency operations, the Indian Point 2 design is the same as the reference plant.

TURBINE CONTROL SYSTEM

The function of the Turbine Control System (TCS) is to control the turbine-generator. From the standpoint of emergency operations, the Indian Point 2 design is the same as the reference plant.

ELECTRICAL POWER SYSTEM

The function of the Electrical Power System (EPS) is to provide ac and dc electrical power to equipment that require electrical power to accomplish their functions. The Indian Point 2 design is different from the reference plant as shown in Appendix A and the IP2 EOPs reflect these differences.

PNEUMATIC POWER SYSTEM

The function of the Pneumatic Power System (PPS) is to supply pneumatic power (typically control air) to equipment that require pneumatic power to accomplish their functions. From the standpoint of emergency operations, the Indian Point 2 design is the same as the reference plant with the exception of the Station Air System as shown in Appendix A.

2. COMPARISON OF SYSTEM DESIGNS (Cont.)

ISOLATION VALVE SEAL WATER SYSTEM

The Isolation Valve Seal Water System (IVSWS) is not included in the reference plant design. On the Indian Point 2 plant design, the function of the IVSWS is to provide a water seal at the containment isolation valves to assure the effectiveness of these valves during any condition which requires containment isolation. The IVSWS is incorporated during the writing of the Indian Point 2 EOPs as shown in Appendix A.

3. DISCUSSION OF ANALYSES

A review has been conducted to confirm that the reference plant analyses which were performed for the Emergency Response Guidelines (ERGs) are applicable to Indian Point Unit 2.

The analyses which are discussed in the background documents for the ERGs were reviewed relative to the Indian Point Unit 2 design. The comments regarding the applicability of the analyses to Indian Point Unit 2 are presented in Appendix B.

Based on the results of this review, Westinghouse concludes that the reference plant analyses are applicable to Indian Point Unit 2 and that no additional analysis is required to support the use of the ERGs in developing plant-specific procedures for Indian Point Unit 2.

4. BASIS FOR USING THE GENERIC WESTINGHOUSE ERGs

To the greatest practicable extent, the Westinghouse Emergency Response Guidelines (ERGs) have been constructed to be generic and applicable to all Westinghouse-designed commercial PWR plants. It can be seen from the comparison made in Section 2 that the Indian Point 2 plant is very similar to the reference plant, which was used as the basis for developing the ERGs. Also, as noted in the analyses discussion provided in Section 3, the analyses performed to support the generic ERGs are also applicable to the Indian Point 2 plant, and no additional analysis is required. Accordingly, the Indian Point 2 EOPs are based upon the generic Westinghouse ERGs, LP-Revision 1. When writing the EOPs, modifications to ERG steps are made to account for the Indian Point 2 plant design differences which are delineated in Section 2 and expanded upon in Appendix A.

5. METHOD FOR DEVELOPING EOPs FROM ERGs

5.1 General

The generic Westinghouse Emergency Response Guidelines (ERGs), LP-Revision 1 was used as the basis for writing the EOPs for the Indian Point 2 plant. A final list of the Revision 1 ERGs is included as Appendix C.

This section describes the method that was used to convert the generic guidelines into EOPs.

5.2 Preparation

The EOP development team obtained and reviewed the following source documents for the Indian Point 2 plant:

- Westinghouse generic ERGs, Rev. 1 and Background Documents
- Indian Point 2 Plant Design Differences and Generic Analysis Applicability
- Indian Point 2 Writers Guide for EOPs
- Technical Specifications
- ERG Footnote Values for Indian Point 2 Unit (plant specific EOP setpoints)
- Engineering Flow Diagrams
- System Descriptions
- Present Plant Procedures

5.3 Method

The EOP development team followed the ERGs step by step. The source documents were researched and then the EOP and an associated EOP Step Documentation Form (Appendix D) were constructed. This EOP Step Documentation Form shows how the differences of each generic guideline step is used in the EOP and also list any additional steps added to the EOP with its basis, if applicable. Any

5.3 Method (Cont.)

difference between the ERG step and the Indian Point 2 EOP step is explained. Otherwise, the ERG step and the EOP step are the same and no explanation is needed. The text of each step is not presented in the forms so that the ERGs and the EOPs must be used in conjunction with these forms

The following additional instructions for writing the EOPs and completing the documentation form are provided.

1. If the generic step is compatible with the Indian Point 2 plant design, then the step is copied into the Indian Point 2 EOP. Since the technical basis for the step is explained in the ERG Background Document, there is no need to repeat this on the documentation form.

2. When an ERG step specifies a numerical value to be calculated, the value will be determined and documented in the plant specific EOP setpoints and put into the Indian Point 2 EOP.

3. When an ERG step requests plant specific details or actions to be added to the procedure, the information is added to the procedure. However, if the operator actions are highly routine or well within the knowledge of the operator, the specific details should not be included and/or referencing another operating procedure is acceptable. The reason for this should be noted on the documentation form.

4. If the ERG guideline fails to identify or address systems or actions that are unique to Indian Point 2 (Refer to Appendix A), then steps were included to encompass the necessary actions. These are noted on the documentation form.

5. If an ERG step specifies an action that cannot be performed at Indian Point 2, the need to conduct the step was evaluated for its effect on the mitigative strategy and the step was deleted or modified and the reason explained on the documentation form.

5.3 Method (Cont.)

6. If an ERG step is modified such that the intent of the step is changed, then the effect on the overall mitigative strategy is evaulated and the basis explained on the documentation form. These differences were not considered to be safety significant since the mitigative strategy was not significantly imparted by the step change.

7. Minor modifications to ERGs steps are acceptable without extensive justification provided that the modification does not alter the intent of the guideline. Examples of these types of modifications are as follows:

   a. Deletions of level of detail (see item #3).

   b. Rewording of ERG steps to conform to standard Indian Point 2 terminology, abbreviations and acronyms.

   c. Rearranging ERG steps to streamline the procedure due to Indian Point 2 control room design and for operator convenience.

8. Safety significant modifications to ERG steps must be identified and justified. Although no safety significant deviations were identified in this development effort, controls will be established such that if one is found it can be appropriately justified.

6. CONCLUSION

For the Indian Point 2 plant, the generic Westinghouse Emergency Response Guidelines (ERGs), Revision 1 are used as the basis for developing the plant specific Emergency Operating Procedures. This document provides a description of the planned method for developing the Indian Point 2 EOPs from the generic Westinghouse guidelines. Also, deviations from the generic guidelines from an emergency operations perspective resulting from differences between the reference plant and Indian Point 2 designs have been identified. This documentation along with Indian Point 2 Writers Guide for EOPs are used to aid in the preparation of the Indian Point 2 EOPs. Also, based on the design difference and generic analysis applicability evaluations along with the method for converting the ERGs to EOPs, it is concluded that differences between the ERGs and EOPs are not considered to be safety significant as defined in Standard Review Plan 13.5.2 in that the flow and mitigative strategies were not significantly affected. The differences identified on the step documentation forms are primarily due to (a) plant differences, (2) ERG maintenance items resolution, (c) writers guide and (d) operator feedback. These are not judged significant enough to warrant rework of the flow or mitigative strategy of the EOP and most were considered enhancements.

APPENDIX A

COMPARISON OF SYSTEM DESIGNS

APPENDIX A

COMPARISON OF SYSTEM DESIGNS

REACTOR TRIP ACTUATION SYSTEM

Reference Plant	IP2
O Reactor Trip Signal	Same
O Turbine Trip Signal	Same

ESF ACTUATION SYSTEM

Reference Plant	IP2
O SI Actuation and Reset Signals	Same
O Containment Spray Signal and Reset	Same
O Feedwater Isolation Signal and Reset	No Separate (1) Reset
O Main Steamline Isolation Signal and Reset	No Block (2)
O Cont. Isolation Phase A Signal Reset	Same
O Cont. Isolation Phase B Signal Reset	Same

APPENDIX A

COMPARISON OF SYSTEM DESIGNS

NUCLEAR INSTRUMENTATION SYSTEM

Reference Plant	IP2
O Source Range Startup Rate	Same
O Neutron Flux Recorder	Same

CONTROL ROD INSTRUMENTATION SYSTEM

Reference Plant	IP2
O Control Rod Position	Same
O Control Rod Bottom Lights	Same

CONTAINMENT INSTRUMENTATION SYSTEM

Reference Plant	IP2
O Containment Pressure	Same
O Containment Temperature	Same
O Containment Recirculation Sump Level	Same (3)

APPENDIX A

COMPARISON OF SYSTEM DESIGNS

REACTOR COOLANT SYSTEM

Reference Plant	IP2
O 4-Loop	Same
O Hot & Cold Leg RTD Bypass	N/A (4)
O Four Reactor Coolant Pumps	Same
O Two PORVs & Associated Block Valves	Same
O Two Pressurizer spray Valves	Same
O RV Head Vent to Containment	Same
O RVLIS (3 ranges)	2 Ranges (5)
O Core Exit TC Temperature	TCs Not (6) Qualified

CHEMICAL & VOLUME CONTROL SYSTEM

Reference Plant	IP2
O Three PD Pumps	Same
O Charging & RCP Seal Injection using one Charging Pump	Same
O Letdown-Regenerative HX, Letdown HX to VCT	Same
O 4% Boric Acid System	12% (7)
O Boric Acid Pumps Supply Charging pumps through either normal make-up or Emergency Boration Path	Same

APPENDIX A

COMPARISON OF SYSTEM DESIGNS

SAFETY INJECTION SYSTEM

Subsystem A

Reference Plant	IP2
O Two High-Head SI Pumps with Shutoff Head of 1500 psig	Three high-head SI pumps (7)
O High-Head SI Pumps take suction from RWST or Low-Head SI Pumps	Suction from RWST, low-head SI pumps (RHR) or Recirculation Pumps (8)
O 12% BAT and valving at suction of high-head SI pumps	N/A (7)

APPENDIX A

COMPARISON OF SYSTEM DESIGNS

Subsystem B

Reference Plant	IP2
O Two Low-Head SI Pumps	Same
O Low-Head SI Pumps take suction from RWST or Containment Sump	Low-head SI Pumps[8] are Back-up to Recirculation Pumps for Sump Recirculation Phases, otherwise low-head SI is the same, (i.e., suction from RWST for low-head injection).
O N/A	Two Recirculation[8] Pumps take suction from containment sump
O Switchover Initiation-Automatic Sump Valve Opening	Switchover[8] Initiation - Manual using eight switch sequence

Subsystem C

Reference Plant	IP2
O 4 Accumulator Tanks with Nitrogen Cover Gas	Same

RESIDUAL HEAT REMOVAL SYSTEM

Reference Plant	IP2
O Two Low-Head Pumps	Same
O Low-Head Pumps take suction from One Hot Leg and return Flow to Four Cold Legs	Same

APPENDIX A

COMPARISON OF SYSTEM DESIGNS

RADIATION MONITORING SYSTEM

Reference Plant	IP2
O Condenser Air Injector Monitor	Same
O SG Blowdown Monitor	Same
O Containment Atmosphere Monitor	Same
O Auxiliary Building Monitor	Same
O SG Steamline Monitor	Same

CONTAINMENT SPRAY SYSTEM

Reference Plant	IP2
O Two Low-Head Containment Spray Pumps	Same
O N/A	Spray capability[7] to fan cooler charcoal filters for fire suppression
O N/A	Recirculation[8] Pumps provide spray during recirculation phase

CONTAINMENT ATMOSPHERE CONTROL SYSTEM

Reference Plant	IP2
O Four Emergency Fan Coolers (two speeds)	Five fan coolers[9] (one speed with charcoal filters)
O Two Hydrogen Recombiners - Manual Actuation	Same
O N/A	Post Accident[10] Containment Venting System

APPENDIX A

COMPARISON OF SYSTEM DESIGNS

AUXILIARY FEEDWATER SYSTEM

Reference Plant	IP2
O Two Motor Driven Pumps	Same
O One Steam Driven Pump	Same
O Condensate Storage Tank	Same
O Alternate Water Supply	Same
O AFW Control Valves	Same

MAIN STEAM SYSTEM

Reference Plant	IP2
O Steam Generator PORVs	Same
O Steam Generator Safety Valves	Same
O Condenser Steam Dump Valves	Same
O Main Steamline Isolation Valves	Same
O Main Steamline Bypass Valves	Locally Operated Manual Valves (11)
O Steam Supply Header Valves to Turbine-Driven AFW Pump	Locally Operated Manual Valves (12)

APPENDIX A

COMPARISON OF SYSTEM DESIGNS

COMPONENT COOLING WATER SYSTEM

Reference Plant	IP2
O CCW Pumps	Same
O RCP Thermal Barrier Valves	Same
O N/A	Two Auxiliary[13] component cooling pumps

SERVICE WATER SYSTEM

Reference Plant	IP2
O Service Water Pumps	Same
O Service Water Valves	Same

MAIN FEEDWATER AND CONDENSATE SYSTEM

Reference Plant	IP2
O Feedwater Flow Control Valves	Same
O Feedwater Flow Control Bypass Valves	Same
O Feedwater Isolation Valves	Same

APPENDIX A

COMPARISON OF SYSTEM DESIGNS

STEAM GENERATOR BLOWDOWN SYSTEM

Reference Plant	IP2
O SG Blowdown Isolation Valves	Same

SAMPLING SYSTEM

Reference Plant	IP2
O SG Blowdown Sample Isolation Valves	Same

SPENT FUEL STORAGE AND COOLING SYSTEM

Reference Plant	IP2
O Spent Fuel Pit level	Same

CONTROL ROD DRIVE MECHANISM COOLING SYSTEM

Reference Plant	IP2
O Control Rod Drive Mechanism Fans	Same

APPENDIX A

COMPARISON OF SYSTEM DESIGNS

CONTROL ROD CONTROL SYSTEM

Reference Plant	IP2
O Control Rods	Same

TURBINE CONTROL SYSTEM

Reference Plant	IP2
O Turbine Runback	Same

ELECTRIC POWER SYSTEM

Reference Plant	IP2
O Two Diesel-Generators	Three Diesel-Generators (14)
O N/A	Emergency Bus Stripping (15)

PNEUMATIC POWER SYSTEM

Reference Plant	IP2
O Instrument Air Compressor	Same
O Instrument Air Valves	Same
O N/A	Station Air System (16)

ISOLATION VALVE SEAL WATER SYSTEM

Reference Plant	IP2
O N/A	IVSWS Valves (17)

APPENDIX A

COMPARISON OF SYSTEM DESIGNS

FOOTNOTES:

(1) On the Indian Point 2 plant design, a SI reset will also reset the main feedwater isolation signal. However, on the reference plant design a separate main feedwater isolation reset is provided. Therefore, FR-H.1 has been modified to delete the feedwater isolation reset.

(2) A safety injection signal and a main steamline isolation signal for Indian Point 2 is generated by high steamline flow in coincidence with either low Tavg or low steamline pressure, whereas on the reference plant design the safety injection and main steamline isolation signals are generated by low steamline pressure. The reference plant has a block on the main control board for this signal, while Indian Point 2 does not. E-1 and E-3 take into account the absence of the main steamline block in the control room.

(3) In addition to the containment recirculation sump level indication, the IP2 design has two additional qualified instruments for measuring sump level; i.e., the containment sump level and reactor cavity sump level indications. E-0 includes these additional instruments.

(4) The RTD bypass is not included in the IP2 plant design. However, the IP2 design has three RTD's protruding directly into each main loop hot leg and three into each loop cold leg. Similar to the hot and cold RTD bypasses, they are used to determine the loop average and loop WT, which are used for indication and control and protection. This design difference has a small impact on the IP2 EOPs. Specifically, cautions in the ERGs, which refer to the RTD bypasses, are deleted as applicable.

APPENDIX A

COMPARISON OF SYSTEM DESIGNS

FOOTNOTES: (Cont.)

(5) For the reference plant design, the RVLIS has three instrument ranges, which are upper range, full range and dynamic head range. The IP2 RVLIS has only two ranges (natural circulation and RCS pumps running ranges), which correspond to the full and dynamic head ranges of the reference RVLIS, respectively. IP2 RVLIS does not have the upper range indication. ES-0.3 and FR-I.3 use the natural circulation range in place of the upper range indication.

(6) The core exit thermocouples are not qualified for IP2. In the ERGs, RCS subcooling is based on core exit thermocouples. Therefore, the IP2 EOPs use hot leg wide range RTDs in place of the core exit thermocouples for determining RCS subcooling. Instrumentation for the detection of inadequate core cooling (Generic Letter 82-28) utilizes the core exit thermocouples which are to be upgraded in accordance with the NRC order confirming NUREG-0737 Supplement 1 commitments.

(7) No impact on the conversion of the ERGs to the IP2 EOPs.

(8) ES-1.3 and ES-1.4 are written to include the plant specific transfer to cold and hot leg recirculation for IP2, which is included in the IP2 SIS System Description.

(9) The reference plant has safety related containment fan coolers, which have two speeds (normal and emergency mode). The IP2 plant has safety related containment fan coolers. However, the IP2 containment fan coolers have only one speed; and, on a safety injection signal they are realigned through charcoal filters. Therefore, steps in E-0, ECA-0.2, ECA-1.1 and FR-Z.1 reflect the IP2 containment fan cooler design.

APPENDIX A

COMPARISON OF SYSTEM DESIGNS

FOOTNOTES: (Cont.)

(10) The Post Accident Containment Venting System provides a backup method to the hydrogen recombiners, for controlling potential hydrogen accumulation in the containment. This is accomplished by the controlled venting of the containment atmosphere to the vent stack. Incorporation of the Post Accident Containment Venting System (e.g. into FR-C.1 and FR-Z.1) is not recommended. The Post Accident Containment Venting System should be utilized under administrative control instead of directly incorporated into the EOPs.

(11) Main steamline bypass valve operation and position status are from outside the control room. Therefore, steps in the EOPs reflect local operation of the bypass valves.

(12) Operation and position indication of the steam supply header valves to turbine-driven AFW pump are from outside the control room. Therefore, steps in the EOPs reflect local operation of the steam supply header valves.

(13) The auxiliary component cooling pumps automatically start on a safety injection signal. These pumps are started to protect the motors of the SIS Recirculation pumps, (located inside containment) from the containment accident atmosphere by supplying cooling water to the Recirculation pump motor heat exchangers. E-0 and ES-1.3 include the operation of the auxiliary component cooling pumps.

APPENDIX A

COMPARISON OF SYSTEM DESIGNS

FOOTNOTES: (Cont.)

(14) The IP2 design requires two diesels for minimum safeguards, while the reference plant only requires one diesel for minimum safeguards. Additional emphasis is added to E-0 to energize appropriate 480 V ac busses.

Also, the IP2 plant design has three CCW pumps. However, one pump is powered from the first bus, two pumps are powered from the second bus and no CCW pump is powered from the third bus (bus 6A). Therefore, to ensure a power supply to at least one CCW pump, a contingency is included in E-0 to cross-tie emergency busses if bus 6A is the only powered bus for the purpose of starting a CCW pump.

(15) For IP2 the 480 volt emergency busses strip on a SI signal and then safeguards loads are sequenced on independent of the busses being powered by either offsite power or the diesel generators. For the reference plant the emergency busses do not strip if offsite power is maintained. The IP2 EOPs are written to include the restart of any non-safeguards equipment which is desired to assist in plant recovery.

(16) The Station Air System normally supplies the Instrument Air System. The EOPs are written to inlcude use of the instrument air compressors should Station Air System not be capable of maintaining instrument air header pressure.

APPENDIX A

COMPARISON OF SYSTEM DESIGNS

FOOTNOTES: (Cont.)

(17) The Isolation Valve Seal Water System (IVSWS) is not included in the reference plant design. On the IP2 plant design, the IVSWS provides a water seal at the containment isolation valves to assure the effectiveness of these valves during any condition which requires containment isolation. System operation is initiated either remote manually or by any automatic safety injection signal. The IVSWS is included in E-0, ECA-0.0 and FR-Z.1. Also, steps in the ERGs dealing with reset of containment isolation incorporate the IVSWS.

APPENDIX B

APPLICABILITY OF ERG ANALYSES TO THE INDIAN POINT 2 PLANT

APPLICABILITY OF ERG ANALYSES TO INDIAN POINT UNIT #2

A review has been conducted to confirm that the reference plant analyses which were performed for the Emergency Response Guidelines (ERGs) are applicable to Indian Point Unit #2.

The analyses which are discussed in the background documents for the ERG's were reviewed relative to Indian Point Unit #2 design. The comments regarding the applicability of the analyses to Indian Point Unit #2 are presented on the following pages for each of the designated ERGs.

Based on the results of this review, Westinghouse concludes that the reference plant analyses are applicable to Indian Point Unit #2 and that no additional analysis is required to support the use of the ERGs in developing plant-specific procedures for Indian Point Unit #2.

Guideline: E-0 REACTOR TRIP OR SAFETY INJECTION
LP-Rev. 1 September 1, 1983

Analyses Performed: RCP Trip Criteria Evaluation

Reason for Analysis:

To determine the operator action time available to trip the RCP's for small LOCA events.

To demonstrate that the proposed RCP trip setpoint is adequate for small LOCA events, but will not result in RCP trip for non-LOCA events such as SGTR.

During some small LOCA events, tripping the RCPs at an inappropriate time will result in greater core damage than would have occurred had the RCPs been tripped at reactor trip or not been tripped at all. Keeping the RCPs running for small LOCA events results in a lower vessel liquid inventory and higher RCS pressure than would have occurred had the RCPs been tripped. If the RCPs are tripped when the vessel liquid inventory is low and the RCS pressure still relatively high, core uncovery resulting from void collapse will be deep and slow to recover causing substantially higher peak clad temperatures and fuel damage.

In order to determine a RCP trip setpoint which will avoid this problem, 3 RCP trip criteria were evaluated to determine the available operator action time. This time is defined as the time interval between the time the RCP trip setpoint is reached and the time RCP trip is required to prevent the problem described above. The analysis has shown that the 3 RCP trip setpoints, as determined from the 3 criteria (RCS pressure, RCS subcooling and RCS/SG differential pressure) were all effective in providing ample operator action time to trip the RCPs for small LOCA events.

For non-LOCA events, such as SGTR and steamline break, the RCP's can remain running. They provide forced circulation cooling and pressurizes spray capability for greater plant control.

The choice of which criteria to use to determine the RCP trip setpoint can be made based on the ability of the criteria to prevent RCP trip for non-LOCA events. In order to aid the utility in making this choice, a generic analysis, covering most domestic Westinghouse plants was performed to determine minimum values for RCS subcooling, RCS pressure and RCS/SG differential pressure for several different non-LOCA transients. Plants were categorized according to number of loops, type of SI system (HP or LP), SG type, no load average temperature, etc. A representative plant from each category was chosen for the analysis.

The minimum values for the RCP trip criteria for Indian Point Unit #2 may be founds in the Generic Issues Section of the ERG Executive Volume.

Guideline: ES-0.2 NATURAL CIRCULATION COOLDOWN
LP-Rev. 1 September 1, 1983

Analysis Performed: Natural Circulation Cooldown

Reason for Analysis:

To determine the maximum permissible RCS cooldown rate to avoid bubble formation in the upper head.

To determine the minimum indicated RCS subcooling required to avoid bubble formation in the upper head.

Downcomer fluid normally passes into the vessel upper head through the spray holes, keeping the upper head temperature somewhere between the hot and cold leg temperatures. When the RCPs are tripped and natural circulation is established, flow reverses and the upper head temperature rises. Poor flow communication between the upper head and the rest of the RCS causes concern of void formation when the RCS is depressurized on natural circulation.

The natural circulation cooldown analysis bounds Westinghouse plants by assuming a minimum upper head flow rate and maximum upper head volume. With these assumptions, a maximum cooldown rate and minimum subcooling requirement were determined to prevent upper head void formation for both T_{HOT} and T_{COLD} upper head plants.

Indian Point Unit #2 has a smaller upper head volume, more upper head flow and more upper head cooling capacity from the CRDM fans than the analysis plant model. Therefore, the analysis for the T_{HOT} upper head plant bounds Indian Point Unit #2.

Guideline: ECA-0.0 LOSS OF ALL AC POWER
LP-Rev.1 September 1, 1984

Analyses Performed: Loss of All AC-Small LOCA

Reason for Analysis:

To describe the thermal hydraulic behavior associated with a loss of all AC event.

A loss of all AC power will result in a loss of CCW to the thermal barrier and a loss of charging flow for seal injection. The resulting high pressure thermal transient could result in an increase in RCP seal leakage and a loss of RCS inventory. This guideline attempts to minimize the loss of RCS inventory with time. AC power must eventually be restored to restore RCS inventory.

Best estimate analyses assuming a total loss of all AC power, were performed for standard Westinghouse 2, 3 and 4 loop plants. Initial leakage rates of 5, 50 and 300 gpm per RCP were analyzed to cover the expected to severely degraded seal cases. To minimize the RCP seal leakage, an operator controlled cooldown/depressurization of the RCS was simulated.

Since the analyses were qualitative in nature, describing the typical thermal hydraulic behavior associated with a small LOCA caused by a loss of CCW and charging flow to the RCPs, they are applicable to Indian Point Unit #2.

Guideline: E-1 LOSS OF REACTOR SECONDARY COOLANT
LP-Rev. 1 September 1, 1983

Analyses Performed: Large (Double ended) LOCA
Small (2" cold leg) LOCA
Intermediate Steamline Break

Reason for Analysis:

To describe the thermal hydraulic behavior associated with a large LOCA, a small LOCA, and an intermediate steam line break.

The RCS response to a loss of coolant is dependent upon the size and location of the break. Small LOCAs will slowly depressurize the RCS as inventory is depleted. If safety injection is not adequate to match break flow, the core will uncover. Large LOCAs will rapidly blowdown the RCS and low pressure safety injection will slowly refill the system.

Conservative FSAR assumptions were used to generate the LOCA transients. Sensitivities to the initial power level, break size and location, SI flow capability and power shape were also determined. The thermal hydraulic behavior associated with a LOCA transient was qualitatively categorized and a break size spectrum was associated with each category.

Although best estimate LOCA analyses for Indian Point Unit #2 would have different quantitative results, the qualitative results i.e., the trend in RCS thermal hydraulic response would be the same. Since this analysis was provided to demonstrate typical LOCA transient behavior, it also applies to Indian Point Unit #2.

The RCS response to a loss of secondary coolant is also dependent on the size and location of the break. A small secondary break may be compensated by normal plant control systems. Larger breaks will cause the secondary to depressurize, causing RCS trip and subsequent cooldown/depressurization.

A best estimate analysis for an intermediate size steamline break was included in the background document. A 3 loop plant with Model D Steam generators was modelled in the analysis. Sensitivities to break size, location, power level and SI flow capability were also determined.

Although the quantitative results for this analysis would differ from one performed specifically for Indian Point Unit #2, the qualitative results (i.e., the trend in RCS and secondary thermal hydraulic responses) would be similar. Since this analysis was provided to demonstrate the thermal hydraulic behavior associated with typical secondary breaks, it also applies to Indian Point Unit #2.

Guideline: ES-1.2 POST LOCA COOLDOWN AND DEPRESSURIZATION
LP-Rev. 1 September 1, 1983

Analyses Performed: Post LOCA Cooldown and Depressurization

Reason for Analysis:

To demonstrate the applicability of the guideline in restoring the RCS to a cold shutdown (RHRS) condition following a small LOCA.

The purpose of the Post LOCA Cooldown and Depressurization guideline is to reduce RCS pressure and temperature to RHRS conditions while maintaining adequate RCS subcooling and inventory. An SI reduction scheme was developed for stopping the SI pumps, based on minimum subcooling requirements, as the system pressure and temperature are reduced. This reduction scheme can be determined on a plant specific basis by using the REDUCE program found in the ERG Executive Volume (See SI REDUCTION SEQUENCE EVALUATION in the Generic Issues Section).

The purpose of the analyses was to demonstrate the applicability of the guideline for the post LOCA recovery scheme. Best estimate analyses were performed for both a high pressure and low pressure SI system on a 4 loop plant. An interactive code (TREAT) was used to simulate operator actions.

The modelled plant systems required to cooldown and depressurize the RCS (SG steam dump, PRZR PORVs, PRZR spray) are also typical of those at Indian Point Unit #2. Additionally, Indian Point Unit #2 may align and adjust the flow from the positive displacement charging pumps, similar to the manner in which the charging flow was modelled in the LP analysis. Since the analysis is qualitative, describing the thermal hydraulic behavior associated with various operator actions in the guideline, it applies to Indian Point Unit #2.

Guideline: E-2 FAULTED STEAM GENERATOR ISOLATION
LP-Rev. 1 September 1, 1984

Analyses Performed: Intermediate Steamline Break
Double Ended Feedline Break

Reasons for Analysis:

To describe the thermal hydraulic behavior associated with a steamline of feedline break.

The RCS response to a loss of secondary coolant is dependent on the size and location of the break. A small secondary break may be compensated by normal plant control systems. Larger breaks will cause the secondary to depressurize, causing reactor trip and subsequent RCS cooldown/depressurization.

The transient results presented in the background document describe the RCS thermal hydraulic response to both an intermediate (0.6 ft^2) steamline break and a double ended feedline break. Best estimate modelling assumptions for a 3 loop Westinghouse PWR were used in the analysis. Sensitivities to break size, power level and SI flow capability were also made.

Although the analysis results presented in the background document are based on a 3 loop plant, the transient trends and response is similar for all plant types. Therefore, the results are applicable to Indian Point Unit #2 in that they present typical RCS thermal hydraulic behavior in a qualitative manner as intended.

Guideline: ECA-2.1 UNCONTROLLED DEPRESSURIZATION OF ALL STEAM GENERATORS
LP-Rev. 1 September 1, 1983

Analyses Performed: Multiple SG Depressurization
Large and Intermediate Size Breaks

Reason for Analysis:

To describe the thermal hydraulic behavior associated with an uncontrollable blowdown of all steam generators.

The RCS response to a loss of secondary coolant is dependent on the size and location of the break. A small secondary break may be compensated by normal plant control systems. Larger breaks will cause the secondary to depressurize, causing reactor trip and subsequent RCS cooldown/depressurization.

The transient results presented in the background document describe the RCS thermal hydraulic response to both an intermediate (0.6 ft^2) steamline break and a double ended rupture of a steamline. Best estimate modelling assumptions for a 3 loop Westinghouse PWR were used in the analysis. Sensitivities to break size and SI flow capability were made. Operator actions consistent with this guideline were modelled. They include control of auxiliary feedwater flow and SI termination.

Although the analysis results presented in the background document are based on a 3 loop plant, the transient trends and response is similar for all plant types. Therefore, the results are applicable to Indian Point Unit #2 in that they present typical RCS thermal hydraulic behavior in a qualitative manner as intended.

Guideline: E-3 STEAM GENERATOR TUBE RUPTURE
LP-Rev. 1 September 1, 1983

Analyses Performed: SGTR with Offsite Power
SGTR without Offsite Power

Reason for Analysis:

To describe the thermal hydraulic behavior associated with a SGTR event and subsequent recovery actions.

A steam generator tube rupture event requires several operator actions to minimize radiological release and terminate primary to secondary leakage. The operator must: identify and isolate the ruptured SG, cooldown the RCS to establish a subcooling margin, depressurize the RCS to restore inventory, terminate SI flow to stop primary to secondary leakage, and then prepare for cooldown to cold shutdown.

The analysis presented in the background document is based on a 4 loop plant with low pressure SI and model F steam generators. Best estimate operator action times and operator actions based on the given RCS symptoms are modelled.

Indian Point Unit #2 has model 44 steam generators. These SGs have larger tube diameters, operate approximately 200 psi lower in pressure and have approximately 20% less secondary volume than the model F SGs used in the background document analysis. This impacts the analysis results in 2 ways. First the break flow for a double ended tube rupture would be higher and the time to SG overfill would be shorter had a plant specific Indian Point Unit #2 analysis been performed. The qualitative analysis results would be similar, however, the time sequence of events would differ. Since the emergency response guideline is based on system symptoms such as RCS pressure, subcooling, secondary pressure, etc., and since the analysis was intended to describe typical thermal hydraulic behavior to operator recovery actions, the analysis is applicable to Indian Point.

Additionally, a plant specific RETRAN-02 analysis was conducted of SGTR events with improved detailed modeling of the break section. The RCS pressure predictions from this analysis indicate that the RCS pressure does not fall below the IP2 setpoint value for manual reactor coolant pump trip on low RCS pressure.

Guideline: ES-3.1 POST-SGTR COOLDOWN USING BACKFILL
LP-Rev. 1 September 1, 1983

Analyses Performed: SGTR Cooldown with Backfill

Reason for Analysis:

To describe the RCS thermal hydraulic response to the cooldown and depressurization using the backfill method for SGTR recovery.

The backfill method for SGTR recovery is designed to minimize radioactive releases to the environment while cooling and depressurizing the RCS and ruptured SG. The RCS is depressurized below the ruptured SG pressure in order to promote secondary to primary leakage through the break.

The analysis presented in the background document is based on a 4 loop plant with low pressure SI and model F steam generators. Best estimate operator action times and operator actions based on the given RCS symptoms are modelled.

Indian Point Unit #2 has model 44 steam generators. These SGs have large tube diameters, operate approximately 220 psi lower in pressure and have approximately 20% less secondary volume than the model F SGs used in the background document analysis. This impacts the analysis results in 2 ways. First the break flow for a double ended tube rupture would be higher and the time to SG overfill would be shorter had a plant specific Indian Point Unit #2 analysis been performed. The qualitative analysis results would be similar, however, the time sequence of events would differ. Since the emergency response guideline is based on system symptoms such as RCS pressure, subcooling secondary pressure, etc., and since the analysis was intended to describe typical thermal hydraulic behavior to operator recovery actions, the analysis is applicable to Indian Point.

Guideline: ES-3.2 POST-SGTR COOLDOWN USING BLOWDOWN
LP-Rev. 1 September 1, 1983

Analyses Performed: SGTR Cooldown with Blowdown

Reason for Analysis:

To describe the RCS thermal hydraulic response to the cooldown and depressurization with blowdown for SGTR recovery.

The blowdown method for SGTR recovery is designed to both minimize radiological releases to the environment and minimize secondary to primary leak flow. The RCS is cooled down to the RHR system operating temperature via steaming the intact SGs and then depressurized. The ruptured SG is simultaneously depressurized through the blowdown lines.

The analysis presented in the background document is based on a 4 loop plant with low pressure SI and model F steam generators. Best estimate operator action times and operator actions based on the given RCS symptoms are modelled.

Indian Point Unit #2 has model 44 steam generators. These SGs have large tube diameters, operate approximately 220 psi lower in pressure and have approximately 20% less secondary volume than the model F SGs used in the background document analysis. This impacts the analysis results in 2 ways. First the break flow for a double ended tube rupture would be higher and the time to SG overfill would be shorter had a plant specific Indian Point Unit #2 analysis been performed. The qualitative analysis results would be similar, however, the time sequence of events would differ. Since the emergency response guideline is based on system symptoms such as RCS pressure, subcooling secondary pressure, etc., and since the analysis was intended to describe typical thermal hydraulic behavior to operator recovery actions, the analysis is applicable to Indian Point.

Guideline: ES-3.3 POST-SGTR COOLDOWN USING STEAM DUMP
LP-Rev. 1 September 1, 1983

Analyses Performed: SGTR Cooldown with Steam Dump

Reason for Analysis:

To describe the RCS thermal hydraulic response to the cooldown and depressurization with steam dump recovery method.

The steam dump method for SGTR recovery is the most rapid of the 3 possible recovery methods. The RCS is cooled down to the RHR system operating temperature via steaming the intact SGs and then depressurized. The ruptured SG is depressurized by releasing steam, preferably to the condenser.

The analysis presented in the background document is based on a 4 loop plant with low pressure SI and model F steam generators. Best estimate operator action times and operator actions based on the given RCS symptoms are modelled.

Indian Point Unit #2 has model 44 steam generators. These SGs have large tube diameters, operate approximately 220 psi lower in pressure and have approximately 20% less secondary volume than the model F SGs used in the background document analysis. This impacts the analysis results in 2 ways. First the break flow for a double ended tube rupture would be higher and the time to SG overfill would be shorter had a plant specific Indian Point Unit #2 analysis been performed. The qualitative analysis results would be similar, however, the time sequence of events would differ. Since the emergency response guideline is based on system symptoms such as RCS pressure, subcooling secondary pressure, etc., and since the analysis was intended to describe typical thermal hydraulic behavior to operator recovery actions, the analysis is applicable to Indian Point.

Guideline: ECA-3.1 SGTR WITH LOSS OF REACTOR COOLANT - SUBCOOLED RECOVERY DESIRED
LP-Rev. 1 September 1, 1983

Analyses Performed: SGTR with Subsequent Failure of an Atmospheric Relief Valve on the Same SG

Reason for Analysis:

To describe the RCS thermal hydraulic response to a SGTR coincident with a LOCA.

To describe the RCS thermal hydraulic response to the operator actions required to recover from the above event under subcooled RCS conditions.

The plant response to a SGTR coupled with a LOCA depends on both the type and timing of the various failures. The analysis presented in the background document describes a SGTR followed by a stuck open atmospheric relief valve on the same steam generator. This results in a small LOCA outside containment.

Due to the size of the break, an operator may choose to use a subcooled recovery method. This guideline provides instructions to reduce RCS pressure and temperature while reducing SI flow to minimize leakage from the RCS.

The analysis presented in the background document is based on a 4 loop plant with low pressure SI and model F steam generators. Best estimate operator action times and operator actions based on the given RCS symptoms are modelled.

Indian Point Unit #2 has model 44 steam generators. These SGs have larger tube diameters, operate approximately 200 psi lower in pressure and have approximately 20% less secondary volume than the model F SGs used in the background document analysis. This impacts the analysis results in 2 ways. First the break flow for a double ended tube rupture would be higher and the time to SG overfill would be shorter had a plant specific Indian Point

Unit #2 analysis been performed. The qualitative analysis results would be similar, however, the time sequence of events would differ. Since the emergency response guideline is based on system symptoms such as RCS pressure, subcooling, secondary pressure, etc., and since the analysis was intended to describe typical thermal hydraulic behavior to operator recovery actions, the analysis is applicable to Indian Point.

Guideline: ECA-3.2 SGTR WITH LOSS OF REACTOR COOLANT - SATURATED RECOVERY DESIRED
LP-Rev. 1 September 1, 1983

Analyses Performed: SGTR (2 tubes) With Subsequent Failure of an Atmospheric Relief Valve on the same SG.

Reason for Analysis:

To describe the RCS thermal hydraulic response to a SGTR coincident with LOCA.

To describe the RCS thermal hydraulic response to the operator actions required to recover from the above event under saturated RCS conditions.

The plant response to a SGTR coupled with a LOCA depends on both the type and timing of the various failures. The analysis presented in the background document describes a SGTR followed by a stuck open atmospheric relief valve on the same steam generator. This results in a small LOCA outside containment.

Due to the size and location of the break, an operator may choose the saturated recovery method. Minimizing RCS leakage is also an important consideration for this event due to the limited RWST supply. This guideline provides instructions to reduce RCS pressure and temperature while reducing SI flow to minimize leakage from the RCS.

The analysis presented in the background document is based on a 4 loop plant with low pressure SI and model F steam generators. Best estimate operator action times and operator actions based on the given RCS symptoms are modelled.

Indian Point Unit #2 has model 44 steam generators. These SGs have larger tube diameters, operate approximately 220 psi lower in pressure and have approximately 20% less secondary volume than the model F SGs used in the background document analysis. This impacts the analysis results in 2 ways.
First the break flow for a double ended tube rupture would be higher and the time to SG overfill would be shorter had a plant specific Indian Point

Unit #2 analysis been performed. The qualitative analysis results would be similar, however, the time sequence of events would differ. Since the emergency response guideline is based on system symptoms such as RCS pressure, subcooling, secondary pressure, etc., and since the analysis was intended to describe typical thermal hydraulic behavior to operator recovery actions, the analysis is applicable to Indian Point.

Guideline: ECA-3.3 SGTR WITHOUT PRESSURIZER PRESSURE CONTROL
LP-Rev. 1 September 1, 1983

Analyses Performed: SGTR Without Pressurizer Pressure Control

Reason for Analysis:

To describe the RCS thermal hydraulic response to a SGTR with operator actions excluding pressurizer pressure control.

The RCS must be depressurized to the ruptured SG pressure to terminate the SGTR break flow. Without pressurizer pressure control, the RCS cannot be depressurized without terminating SI. This guideline allows the operator to terminate SI for a SGTR. RCS pressure is controlled by charging flow.

The analysis presented in the background document is based on a 4 loop plant with low pressure SI and model F steam generators. Best estimate operator action times and operator actions based on the given RCS symptoms are modelled.

Indian Point Unit #2 has model 44 steam generators. These SGs have larger tube diameters, operate approximately 200 psi lower in pressure and have approximately 20% less secondary volume than the model F SGs used in the background document analysis. This impacts the analysis results in 2 ways. First the break flow for a double ended tube rupture would be higher and the time to SG overfill would be shorter had a plant specific Indian Point Unit #2 analysis been performed. The qualitative analysis results would be similar, however, the time sequence of events would differ. Since the emergency response guideline is based on system symptoms such as RCS pressure, subcooling, secondary pressure, etc., and since the analysis was intended to describe typical thermal hydraulic behavior to operator recovery actions, the analysis is applicable to Indian Point.

Guideline: FR-S.1 RESPONSE TO NUCLEAR POWER GENERATION/ATWS
LP-Rev. 1 September 1, 1983

Analyses Performed:

1. Loss of Load/Turbine Trip
2. Loss of Normal Feedwater
3. Loss of Offsite Power
4. Accidental RCS Depressurization
5. Uncontrolled RCCA Bank Withdrawal

Reason for Analysis:

To describe the RCS thermal hydraulic response to an ATWS.

The RCS thermal hydraulic conditions at the time the operator identifies an ATWS event can be very different, depending on the initiating event. Cases 1, 2, 3 and 5 result in simultaneous increases in RCS pressure and temperature caused by core heat generation greater than SG heat removal. However, Case 4, Accidental RCS Depressurization, does not. The only reliable symtom of an ATWS is an abnormal core power range flux indication and/or rod position indication.

The analyses were performed for 2, 3 and 4 loop plants with different combinations of steam generators. Sensitivity studies to numerous input assumptions were also made to generalize the analysis for different plants. In particular, important parameters for Indian Point Unit #2 include 600 gpm total auxiliary feed flow limit at the 35% regulating valve position, core power of 2758 MWt, and SG design pressure of 1085 psig. Sensitivities to these and other parameters were considered in the analyses. Since the analyses are general and conservatively bounding, they are applicable to Indian Point Unit #2.

Guideline: FR-C.1 RESPONSE TO INADEQUATE CORE COOLING
LP-Rev. 1 September 1, 1983

Analyses Performed: Inadequate Core Cooling

Reason for Analysis:

To describe the RCS thermal hydraulic response leading to an inadequate core cooling condition.

To describe the RCS thermal hydraulic response to operator actions taken to recover from an inadequate core cooling condition.

The indication of an inadequate core cooling condition requires prompt operator action. Without adequate heat removal, core decay energy will cause fuel temperatures to increase, thus endangering the clad integrity. The purpose of the ICC guideline is to restore core cooling.

Three different methods were developed to recover from an ICC event. The recovery actions are: reinitiation of high pressure safety injection, rapid SG depressurization/RCS cooldown and opening pressurizer PORVs and restarting RCPs. The guideline uses the trends in RCS inventory and core exit temperature to determine the effect of each recovery method.

The analyses were based on best estimate design data for a standard Westinghouse 4 loop plant. Separate LOCA analyses were performed for a one inch and a four inch equivalent diameter break size. In order to achieve ICC conditions, a loss of all high head safety injection was assumed. Additionally, the accumulators were locked out in the four inch break analysis. Starting from the point inadequate core cooling conditions were indicated, each recovery action was modelled to determine the effectiveness of that method in restoring core cooling in a timely manner.

The results of these analyses were used to define the onset of ICC and to determine the order of recovery actions in the guideline. The RCS thermal hydraulic behavior leading to an ICC condition and following a recovery action should be similar for all Westinghouse plants. Therefore, the analysis is applicable to Indian Point Unit #2.

Guideline: FR-H.1 RESPONSE TO LOSS OF SECONDARY HEAT SINK
LP-Rev. 1 September 1, 1983

Analyses Performed: Loss of Secondary Heat Sink

Reason for Analysis:

To describe the RCS thermal hydraulic response to a loss of secondary heat sink.

To evaluate the bleed and feed recovery method.

A loss of secondary heat sink is characterized by decreasing SG levels caused by minimum or no feedwater supply to the SGs; followed by increasing RCS pressure and temperature. The bleed and feed recovery method is used if AFW is unavailable or ineffective in restoring the secondary heat sink. This method involves opening the Pressurizer PORVs to reduce RCS pressure and initiating high pressure SI to provide core cooling and to replace inventory lost through the PORVs.

The analyses were performed for both a 4 loop, 3025 MW_{th}, low pressure SI plant and a 4 loop, 3411 MW_{th} high pressure SI plant. Conservative FSAR assumptions were applied. The analyses were performed to evaluate the time at which RCS bleed and feed must be initiated to prevent sustained core uncovery.

In order to determine generic symptoms for loss of secondary heat sink , the analyses were performed for a range of PORV capacity/core power ratios. The ratio of PORV capacity/core power for Indian Point Unit #2 is 129.8 lbm/hr/MW_{th}.

Based on this value, the results of the analysis indicate that Indian Point Unit #2 must initiate bleed and feed prior to steam generator dryout. The generic symptoms for loss of secondary heat sink for plants with PORV capacity/core power ratios less than 177 lbm/hr/MW_{th} apply to Indian Point Unit #2.

The figures presented in the background document are for a PORV capacity/core power ratio of 177 lbm/hr/MW_{th}. This is somewhat higher than Indian Point Unit #2. A more applicable set of figures may be found in WCAP-9914, Cases S through X.

Due to the generic basis and the bounding assumptions made for this analysis it applies to Indian Point Unit #2.

Guideline: FR-P.1 RESPONSE TO IMMINENT PRESSURIZED THERMAL SHOCK CONDITION
LP-Rev. 1 September 1, 1983

Analyses Performed: PTS Flaw Initiation

Reason for Analysis:

To determine the generic flaw initiation curve known as "Limit A."

A concern for reactor vessel integrity arises when a PTS condition occurs. A rapid vessel cooldown at relatively high pressure causes the stress on the vessel wall to increase. Flaws in the wall may begin to grow (crack initiation) as a result of this stress if the fracture resistance of the wall has been reduced because of neutron irradiation.

In order to give guidance to plant operators during PTS conditions, analyses were performed to establish pressure - temperature limit curves for three categories of reactor vessels, depending upon the projected RT_{NDT}. The three categories cover all of the reactor vessels for Westinghouse plants. Currently, Indian Point Unit #2 is in category 2, thus the analysis is applicable to this plant.

APPENDIX C

EMERGENCY RESPONSE GUIDELINES, REVISION 1 LISTING

APPENDIX C

EMERGENCY RESPONSE GUIDELINES
OPTIMAL RECOVERY GUIDELINES

E-0	Reactor Trip or Safety Injection
ES-0.0	Rediagnosis
ES-0.1	Reactor Trip Response
ES-0.2	Natural Circulation Cooldown
ES-0.3	Natural Circulation Cooldown for Steam Void in Vessel (with RVLIS)
ES-0.4	Natural Circulation Cooldown for Steam Void in Vessel (without RVLIS)
E-1	Loss of Reactor or Secondary Coolant
ES-1.1	SI Termination
ES-1.2	Post-LOCA Cooldown and Depressurization
ES-1.3	Transfer to Cold Leg Recirculation
ES-1.4	Transfer to Hot Leg Recirculation
E-2	Faulted Steam Generator Isolation
E-3	Steam Generator Tube Rupture
ES-3.1	Post-SGTR Cooldown Using Backfill
ES-3.2	Post-SGTR Cooldown Using Blowdown
ES-3.3	Post-SGTR Cooldown Using Steam Dump
ECA-0.0	Loss of All A.C. Power
ECA-0.1	Loss of All A.C. Power Recovery Without S.I. Required
ECA-0.2	Loss of All A.C. Power Recovery With S.I. Required
ECA-1.1	Loss of Emergency Coolant Recirculation
ECA-1.2	LOCA Outside Containment
ECA-2.1	Uncontrolled Depressurization of All Steam Generators
ECA-3.1	SGTR With Loss of Reactor Coolant - Subcooled Recovery Desired
ECA-3.2	SGTR With Loss of Reactor Coolant - Saturated Recovery Desired
ECA-3.3	SGTR Without Pressurizer Pressure Control

APPENDIX C

EMERGENCY RESPONSE GUIDELINES
FUNCTION RESTORATION GUIDELINES

F-0	The Critical Safety Function Status Trees
F-0.1	Subcriticality
F-0.2	Core Cooling
F-0.3	Heat Sink
F-0.4	Integrity
F-0.5	Containment
F-0.6	Inventory
FR-S.1	Response to Nuclear Power Generation/ATWS
FR-S.2	Response to Loss of Core Shutdown
FR-C.1	Response to Inadequate Core Cooling
FR-C.2	Response to Degraded Core Cooling
FR-C.3	Response to Saturated Core Cooling Conditions
FR-H.1	Response to Loss of Secondary Heat Sink
FR-H.2	Response to Steam Generator Overpressure
FR-H.3	Response to Steam Generator High level
FR-H.4	Response to Loss of Normal Steam Release Capabilities
FR-H.5	Response to Steam Generator Low level
FR-P.1	Response to Imminent Pressurized Thermal Shock Conditions
FR-P.2	Response to Anticipated Pressurized Thermal Shock Conditions
FR-Z.1	Response to High Containment Pressure
FR-Z.2	Response to Containment Flooding
FR-Z.3	Response to High Containment Radiation Level
FR-I.1	Response to High Pressurizer Level
FR-I.2	Response to Low Pressurizer Level
FR-I.3	Response to Voids in Reactor Vessel

APPENDIX D

INDIAN POINT 2 EOP STEP DOCUMENTATION FORM

PAGE ____ OF ____

APPENDIX D

EOP STEP DOCUMENTATION FORM

EOP NO. _____ REV.: _____

TITLE _____

PREPARED BY: _____ DATE _____

REVIEWED BY: _____ DATE _____

EOP STEP NO.	ERG STEP NO.	EXPLANATION OR BASIS OF DIFFERENCE

APPENDIX E

WOG LP REFERENCE PLANT DESCRIPTION

REV. 1

WESTINGHOUSE OWNERS GROUP
EMERGENCY RESPONSE GUIDELINES

LOW-PRESSURE
REFERENCE PLANT DESCRIPTION

September 1, 1983

TABLE OF CONTENTS

SECTION		PAGE
1.	INTRODUCTION	1
2.	PLANT SYSTEMS	2
2.1	Reactor Trip Actuation System	5
2.2	Engineered Safeguards Features Actuation System	5
2.3	Nuclear Instrumentation System	11
2.4	Control Rod Instrumentation System	11
2.5	Radiation Instrumentation System	12
2.6	Containment Instrumentation System	12
2.7	Reactor Coolant System	12
2.8	Safety Injection System	15
2.9	Residual Heat Removal System	18
2.10	Chemical and Volume Control System	21
2.11	Component Cooling Water System	23
2.12	Service Water System	23
2.13	Containment Spray System	23
2.14	Containment Atmosphere Control System	26
2.15	Main Steam System	26
2.16	Main Feedwater and Condensate System	28
2.17	Auxiliary Feedwater System	30
2.18	Steam Generator Blowdown System	30
2.19	Sampling System	30
2.20	Spent Fuel Storage and Cooling System	32
2.21	Control Rod Drive Mechanism Cooling System	32
2.22	Control Rod Control System	32
2.23	Turbine Control System	32
2.24	Electrical Power System	32
2.25	Pneumatic Power System	34
3.	PLANT INSTRUMENTATION AND CONTROLS	35

TABLE OF CONTENTS (Cont)

FIGURE	PAGE
1. REACTOR COOLANT SYSTEM	14
2. HIGH-HEAD SI SUBSYSTEM	17
3. LOW-HEAD SI SUBSYSTEM	19
4. SI-ACCUMULATOR SUBSYSTEM	20
5. RESIDUAL HEAT REMOVAL SYSTEM	22
6. CHEMICAL AND VOLUME CONTROL SYSTEM	24
7. COMPONENT COOLING WATER TO REACTOR COOLANT PUMPS	25
8. CONTAINMENT SPRAY SYSTEM	27
9. MAIN STEAM SYSTEM	29
10. AUXILIARY FEEDWATER SYSTEM	31

TABLE	
1. PLANT SYSTEMS	3
2. LEGEND FOR FIGURES	4
3. INSTRUMENTATION AND CONTROL REQUIREMENTS	36

1. INTRODUCTION

The Emergency Response Guidelines (ERGs) provide generic technical guidance applicable to all Westinghouse-designed commercial pressurized water reactor plants. The ERGs are developed in low-pressure (LP) and high-pressure (HP) versions to address the most significant difference in plant design configuration from a standpoint of the plant response to emergency transients, i.e., the maximum shutoff pressure of the safety injection system. The HP version is applicable to plants that are designed with a safety injection system shutoff pressure greater than the reactor coolant system pressurizer power operated relief valve (PORV) pressure setpoint. High-pressure plants utilize the charging pumps as safety injection pumps. The LP version is applicable to plants that are designed with a safety injection system shutoff pressure less than the reactor coolant system pressurizer power operated relief valve (PORV) pressure setpoint. Low-pressure plants do not utilize the charging pumps as safety injection pumps.

Each version of the ERGs is based on a generic reference plant configuration. The reference plant is developed to sufficiently define a configuration for which technical guidance can be developed while maximizing the applicability of the technical guidance. Application of the ERGs to a plant-specific configuration requires that the utility review the plant-specific configuration relative to the reference plant configuration. This review will establish applicability of the ERGs to the specific plant and provide input to the plant-specific procedure development effort.

This document defines the reference plant for the LP version of the ERGs. The LP reference plant is basically an "n-loop" plant with system design features similar to earlier Westinghouse-design 2-loop plants.

2. PLANT SYSTEMS

The reference plant is defined in terms of twenty-five separate plant systems which form a generic set that has general applicability to a broad range of plants. The plant systems are grouped into four categories:

1) Control and Protection Actuation Systems
2) Instrumentation Systems
3) Process Control Systems
4) Support Systems

Each system is defined to the extent necessary to maximize technical guidance with respect to system operation in response to an emergency transient and to maximize the generic applicability of that technical guidance.

The reference plant systems are identified by category in Table 1. The following subsections describe the systems from an emergency operations perspective. Figures are included to show the reference plant systems where appropriate. Table 2 provides a legend of symbols used in the figures. Detail shown on the figures is consistent with the instrumentation and equipment specifically identified in the ERGs, aiding the user of this document in identifying and comparing the reference plant instrumentation and equipment to the plant-specific instrumentation and equipment. Additional detail (e.g., valves) is not shown where the detail exceeds that specifically identified in the ERGs.

TABLE 1
PLANT SYSTEMS

Control and Protection Actuation Systems

- Reactor Trip Actuation System
- Engineered Safeguards Features Actuation System

Instrumentation Systems

- Nuclear Instrumentation System
- Control Rod Instrumentation System
- Radiation Instrumentation System
- Containment Instrumentation System

Process Control Systems

- Reactor Coolant System
- Safety Injection System
- Residual Heat Removal System
- Chemical and Volume Control System
- Component Cooling Water System
- Service Water System
- Containment Spray System
- Containment Atmosphere Control System
- Main Steam System
- Main Feedwater and Condensate System
- Auxiliary Feedwater System
- Steam Generator Blowdown System
- Sampling System
- Spent Fuel Storage and Cooling System
- Control Rod Drive Mechanism Cooling System
- Control Rod Control System
- Turbine Control System

Support Systems

- Electrical Power System
- Pneumatic Power System

TABLE 2

LEGEND FOR FIGURES

SYMBOLS

Motor Operated Valve

Hydraulic Operated Valve

Air Operated Valve

Air Operated Control Valve

Safety Valve

Centrifugal Pump

Positive Displacement (PD) Pump

Instrumentation

F - Flow T - Temperature

L - Level P - Pressure

ACRONYMNS (unique to Figures)

ACC	- Accumulator	IRC	- Inside Reactor Containment
Aux.	- Auxiliary	LHSI	- Low-head SI
CHSI	- Charging/SI	ORC	- Outside Reactor Containment
EX	- Excess	RTD	- Resistance Temperature Detector
HHSI	- High-head SI	RV	- Reactor Vessel

2.1 Reactor Trip Actuation System

The reactor trip actuation system monitors specified process parameters and equipment status and actuates reactor trip if conditions exceed specified limits. The reactor trip actuation system includes automatic actuations that occur concurrent with actuation of reactor trip.

The process parameters and equipment status monitored by the reactor trip actuation system are plant-specific. A reactor trip signal is automatically generated if any condition exceeds its specified limit. Concurrent with opening of reactor trip breakers, a P-4 signal is generated and provides the following:

- o Turbine trip
- o Input signal to feedwater isolation logic
- o Input signal to SI block logic

2.2 Engineered Safeguards Features Actuation System

The engineered safeguards features (ESF) actuation system monitors specified process parameters and actuates ESF operation if conditions exceed specified limits. The ESF Actuation System consists of the following automatic actuation signals.

Safety Injection Signal

The safety injection (SI) signal is the primary ESF actuation signal. It is automatically generated on any of the following:

- o Low pressurizer pressure
- o Low steamline pressure
- o High-1 containment pressure
- o Manual operator actuation

The following plant equipment are automatically actuated by an SI signal:

- o Reactor trip
- o Feedwater isolation (including closure of feedwater isolation, flow control and bypass valves)
- o Auxiliary feedwater (AFW) start (including start of motor-driven AFW pumps and closure of steam generator blowdown isolation and sample valves)
- o Diesel-generator start
- o Emergency fan cooler start
- o Safety injection system start
- o Component cooling water system start (CCW pumps will not automatically start if a blackout signal exists)
- o Service water system start
- o Containment isolation Phase A
- o Containment ventilation isolation

The SI signal actuation logic includes the following reset/block features:

- o Manual block/reset for low pressurizer pressure actuation signal (concurrent with a P-11 low pressurizer pressure permissive signal)
- o Manual block/reset for low steamline pressure actuation signal (concurrent with a P-11 low pressurizer pressure permissive signal)
- o Manual block/reset for SI signal (concurrent with expiration of the SI signal reset time delay and P-4 reactor trip input signal)

Containment Spray Signal

The containment spray signal automatically actuates on any of the following:

- o High-3 containment pressure
- o Manual operator actuation

The following plant equipment automatically actuate on a containment spray signal:

- o Containment spray system start
- o Containment isolation Phase B

The containment spray signal actuation logic includes the following reset capabilities:

- o Manual reset for containment spray system start signal
- o Manual reset for containment isolation Phase B signal

Auxiliary Feedwater Start Signal

The auxiliary feedwater (AFW) system consists of one turbine-driven and two motor-driven AFW pumps. These pumps are started on different actuation signals.

The motor-driven AFW pumps automatically start on any of the following:

- o Trip of all main feedwater pumps
- o SI signal
- o Blackout signal (generated by low voltage on normal power supplies feeding ac emergency buses) from associated ac emergency bus
- o Low-low level in any steam generator

The turbine-driven AFW pump automatically starts on any of the following:

- o Low-low level in two steam generators
- o Loss of power signal (generated by low voltage on RCP buses)

An auxiliary feedwater start signal that actuates the AFW pumps also actuates closure of steam generator blowdown isolation and sample valves.

Containment Isolation Phase A Signal

The containment isolation Phase A signal automatically isolates non-essential containment penetrations to prevent or minimize the release of radioactive material outside containment. This signal automatically actuates on any of the following input signals:

- o SI signal
- o Manual operator actuation of Phase A signal

The containment isolation Phase A signal closes valves in plant systems that penetrate containment. The actuation logic includes separate reset capability for each input actuation signal.

Containment Isolation Phase B Signal

The containment isolation Phase B signal automatically isolates essential containment penetrations to prevent the release of radioactive material outside containment. The signal automatically actuates on any of the following input signals:

- o High-3 containment pressure
- o Manual operator actuation of containment spray signal

The containment isolation Phase B signal automatically closes the containment isolation valves in the component cooling water lines to the reactor coolant pumps. The actuation logic includes separate reset capability for each input actuation signal.

Main Steamline Isolation Signal

Main steamline isolation for all steam generators is actuated on any of the following:

- o High-2 containment pressure
- o Manual operator actuation

Main steamline isolation for only the affected steam generator is actuated on any of the following:

- o Low steamline pressure in any main steamline (when pressurizer pressure above P-11)
- o High steam pressure rate in any main steamline (when pressurizer pressure below P-11)

The following plant equipment automatically actuate on a main steamline isolation signal:

- o Main steamline isolation valves close
- o Main steamline isolation bypass valves close

The main steamline isolation logic includes the following reset capabilities:

- o Manual block/reset for low steamline pressure actuation signal (concurrent with a P-11 low pressurizer pressure permissive signal)
- o Manual block/reset for high steam pressure rate actuation signal (concurrent with a P-11 low pressurizer pressure permissive signal)
- o Manual reset for main steamline isolation signal

Containment Ventilation Isolation Signal

The containment ventilation isolation signal automatically isolates containment ventilation penetrations to prevent the release of radioactive material outside containment. This signal automatically actuates on any of the following input signals:

- o SI signal
- o High containment radiation
- o Manual operator actuation of containment spray signal
- o Manual operator actuation of containment isolation Phase A signal

The containment ventilation isolation signal closes dampers in the ventilation system. The actuation logic includes separate reset capability for each input actuation signal.

Main Feedwater Isolation Signal

The main feedwater isolation signal automatically isolates the main feedwater lines to prevent excessive filling of the steam generators. The signal automatically actuates on any of the following input signals:

- o SI signal
- o High-high level (P-14 signal) in any steam generator
- o Reactor trip (P-4 signal) coincident with low reactor coolant system average temperature (T_{avg})

The main feedwater isolation signal closes the following valves:

- o Main feedwater isolation valves
- o Main feedwater flow control valves
- o Main feedwater bypass valves

The main feedwater isolation signal includes the following reset/block capabilities:

- Manual reset for the reactor trip (P-4) signal coincident with RCS low T_{avg}
- Manual reset/block for the SI signal. This is the same reset/block feature discussed under SI signal.

2.3 Nuclear Instrumentation System

The nuclear instrumentation system (NIS) monitors and displays the reactivity state of the reactor core. It consists of instrumentation that monitors leakage neutron flux outside the reactor vessel. Neutron flux is monitored over the source, intermediate, and power ranges. Startup rate is calculated over the source and intermediate ranges. The NIS includes a neutron flux recorder that can be switched to record different ranges. The source range neutron flux detectors automatically energize when flux decreases below the source range high flux trip (P-6) setpoint following a reactor trip, permitting the neutron flux recorder to be manually transferred to the source range scale.

2.4 Control Rod Instrumentation System

The control rod instrumentation system monitors and displays the position of the control rods in the reactor core. It provides control rod position and rod bottom light indications.

2.5 Radiation Instrumentation System

The radiation instrumentation system monitors radiation levels in specified process systems and specified areas internal and external to the plant. It consists of the following:

- Radiation instrumentation located inside containment
- Radiation instrumentation located in the main steam system and steam generator blowdown system
- Radiation instrumentation located inside the auxiliary building

2.6 Containment Instrumentation System

The containment instrumentation system monitors the environmental condition and isolation status of containment. It consists of containment pressure and temperature instrumentation, containment recirculation sump level instrumentation, and position indication for containment isolation valves and dampers.

2.7 Reactor Coolant System

The reactor coolant system (RCS) transfers heat from the reactor core to the main steam system or residual heat removal system and provides a barrier against the release of reactor coolant or radioactive material to the containment environment.

The RCS consists of two identical heat transfer loops (connected in parallel to the reactor vessel), a pressurizer and a pressurizer relief tank. Each loop includes a RTD bypass loop. Flow from the RCS hot leg and cold leg enters a bypass loop and returns via a common header to the reactor coolant pump (RCP) suction. Each bypass loop contains a hot leg and cold leg manifold that includes RTD temperature sensors used in plant control and protection.

The pressurizer is connected to the hot leg of one loop via the pressurizer surge line and the cold legs of two loops via the pressurizer spray lines. The pressurizer has two power operated relief valves (PORVs) with associated block valves, three ASME code safety valves, and heaters. RCS pressure is controlled by use of the pressurizer where water and steam are maintained in equilibrium through use of the heaters, water spray, and steam release.

The pressurizer PORVs and safety valves discharge to the pressurizer relief tank where steam discharge is condensed and cooled by mixing with water.

Normal operating pressure of 2235 psig in the RCS is maintained by a Pressure Control System which automatically energizes heaters and normal spray in the pressurizer as necessary to maintain pressure. Pressurizer PORVs are automatically controlled to open at 2335 psig, and the safety valves have a lift pressure of 2485 psig.

A Cold Overpressure Protection System functions to limit RCS pressure to a programmed maximum (as a function of temperature) at low RCS temperatures. This control system must be manually placed in service and utilizes only the pressurizer PORVs to limit RCS pressure.

The reference plant RCS is shown in Figure 1.

Figure 1. REACTOR COOLANT SYSTEM

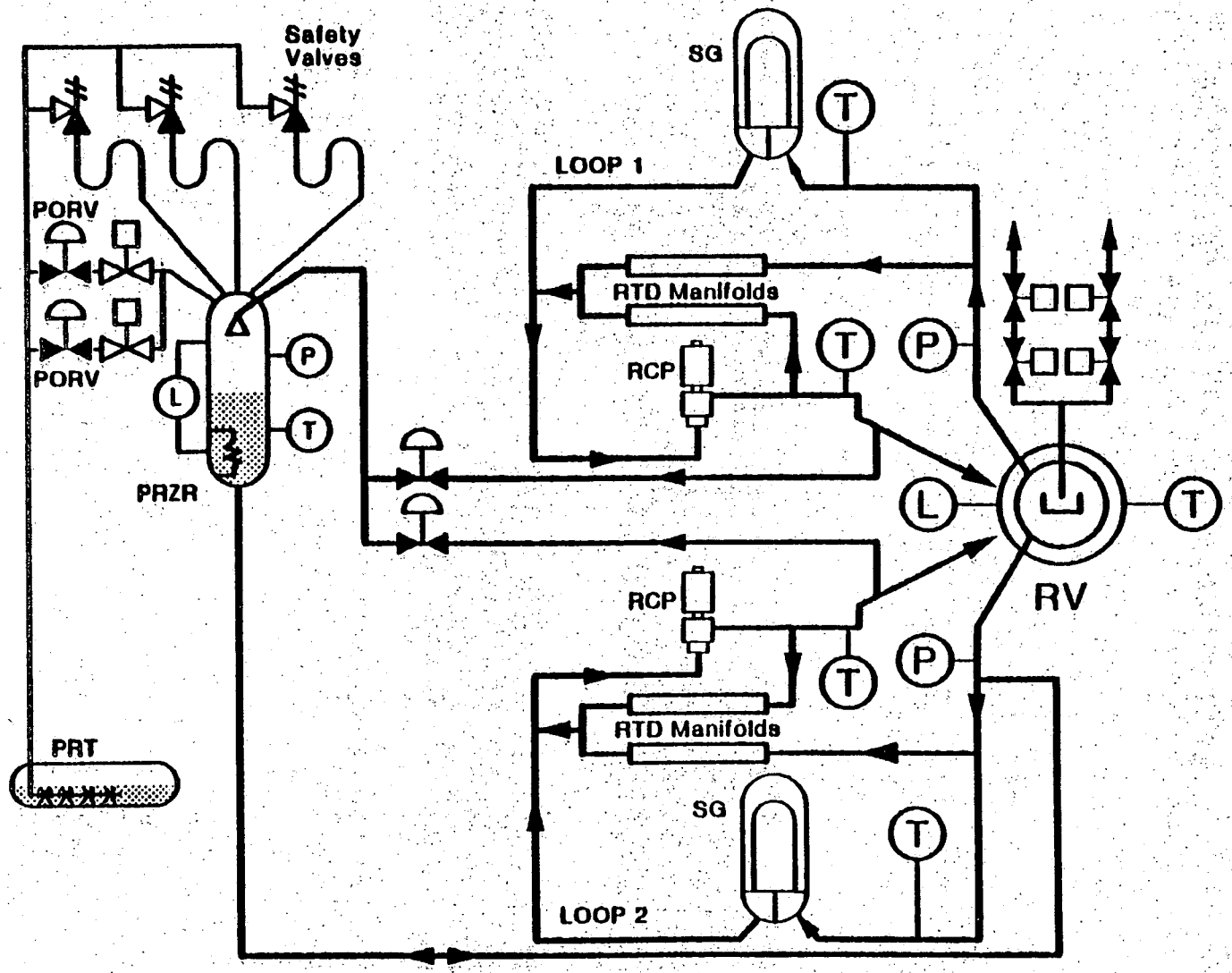

5570006846.038

2.8 Safety Injection System

The safety injection (SI) system provides borated water to the reactor coolant system for events that require engineered safeguards features operation. The safety injection system is designed to operate in three physical configurations or modes depending on the plant transient and time into the plant transient:

- Cold leg injection mode (short-term core cooling mode)

The cold leg injection mode is defined as that configuration in which borated water is delivered from the refueling water storage tank (RWST) to the RCS cold legs.

- Cold leg recirculation mode (long-term core cooling mode)

The cold leg recirculation mode is defined as that configuration in which borated water is recirculated from the containment sump to the RCS cold legs. This mode is initiated by manual operator action to open the containment sump isolation valves to the Safety Injection System.

- Hot leg recirculation mode (long-term core cooling and boron concentration control)

The hot leg recirculation mode is that configuration in which borated water is recirculated from the containment sump to both the RCS hot legs and RCS cold legs. This mode is initiated by manual operator action based on time into the transient.

The safety injection system consists of the following three major subsystems.

High-Head SI Subsystem

The high-head SI subsystem consists of two centrifugal high-head SI pumps. These pumps are part of the SI system and are normally aligned for SI cold leg injection. Upon receipt of an SI signal, the high-head SI pumps automatically start in the SI cold leg injection mode. In this mode the high-head SI pumps take suction from the boric acid tank (BAT) and discharge to all RCS cold legs (through the accumulator discharge lines). Upon depletion of BAT contents, the high-head SI pump suction is automatically transferred to the RWST on low BAT level. During recirculation modes, the high-head SI pumps are aligned to take suction from the low-head SI pump discharge and to discharge to all RCS cold legs or hot legs depending on recirculation mode.

The discharge shutoff head pressure of the high-head SI pumps is approximately 1500 psig.

The BAT contains 12 weight percent (21000 ppm boron) boric acid solution. During normal operation the BAT contents are isolated by parallel sets of motor operated valves.

The reference plant high-head SI subsystem is shown in Figure 2.

Low-Head SI Subsystem

The low-head SI subsystem consists of two centrifugal pumps and two heat exchangers. These pumps and heat exchangers are part of the residual heat removal system and provide normal plant shutdown heat removal. During normal operation, these pumps are aligned for SI cold leg injection. Upon receipt of an SI signal, the low-head SI pumps automatically start in the SI cold leg injection mode. In this mode the low-head SI pumps take suction from the RWST and discharge to all RCS cold legs. During recirculation modes, the low-head SI pumps are aligned to take suction from the containment recirculation sump and to discharge to the suction of the high-head SI pumps as well as to all RCS cold legs.

Figure 2. HIGH-HEAD SI SUBSYSTEM

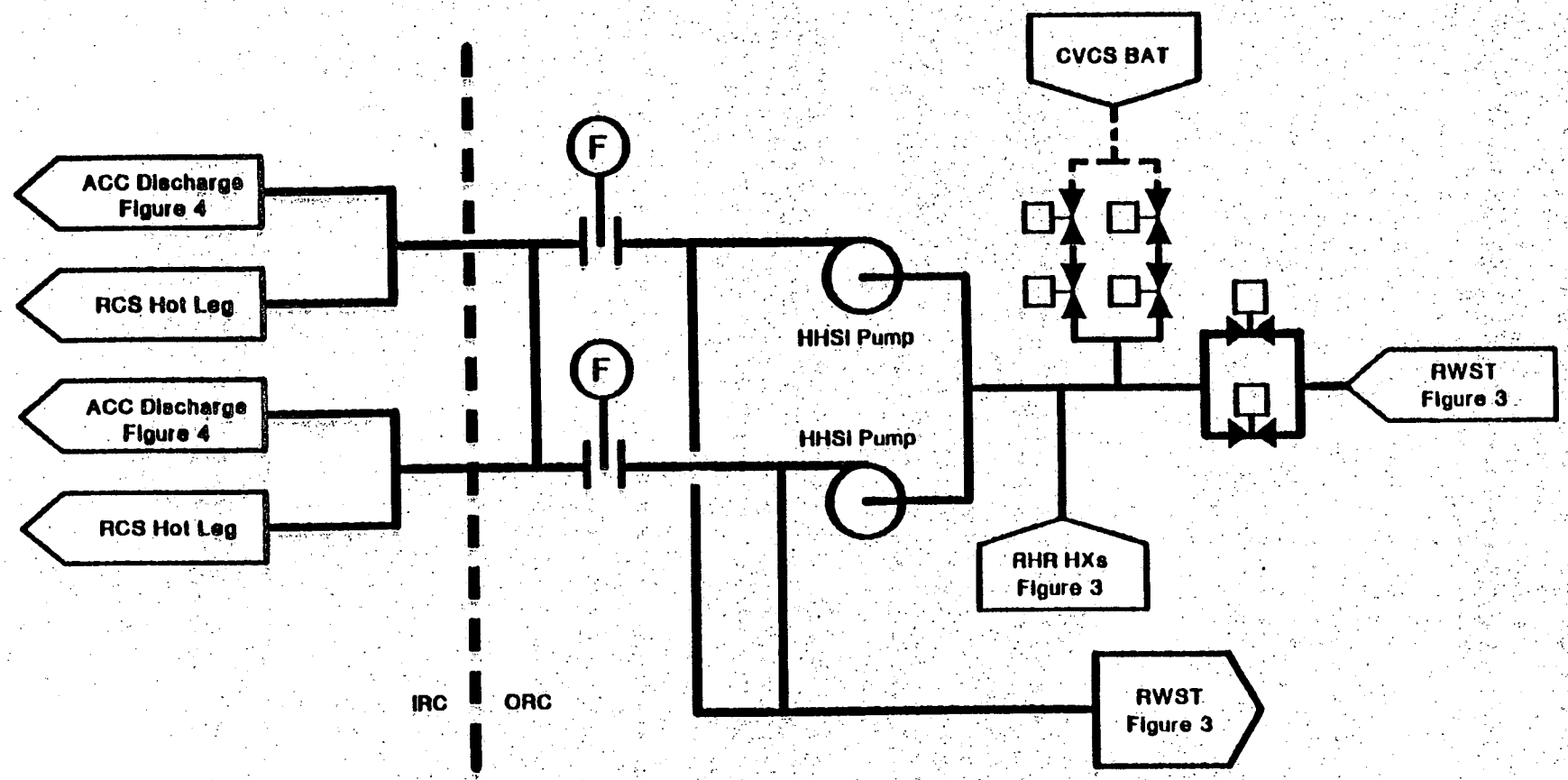

657D006846.039

The discharge shutoff pressure of the low-head SI pumps is approximately 250 psig.

The heat exchangers are supplied with component cooling water during SI recirculation modes.

The reference plant low-head SI subsystem is shown in Figure 3. Those portions of the low-head SI subsystem that are part of the residual heat removal system are shown as dashed in Figure 3.

SI-Accumulator Subsystem

The SI-accumulator subsystem consists of two accumulator tanks, each connecting to one RCS cold leg via an accumulator injection line. Each tank contains borated water and is pressurized to a nominal 750 psig with a nitrogen cover gas. A single isolation valve is provided in each accumulator injection line and series vent valves are provided in the accumulator nitrogen supply lines. During normal operation the injection isolation valves are open with power removed from the valve operators. The accumulators are available to deliver their contents to the RCS cold legs during the injection mode of any emergency transient that is accompanied by RCS depressurization below the accumulator pressure.

The reference plant SI-accumulator subsystem is shown in Figure 4.

2.9 Residual Heat Removal System

The residual heat removal (RHR) system removes heat from the reactor coolant system during plant shutdown operations at low reactor coolant system pressures.

The RHR system consists of two RHR pumps (that also function as low-head SI pumps) and two RHR heat exchangers. The RHR system provides normal shutdown heat removal when RCS pressure and temperature are reduced to approximately 400 psig and 350°F. During normal shutdown heat removal operations, the RHR

Figure 3. LOW-HEAD SI SUBSYSTEM

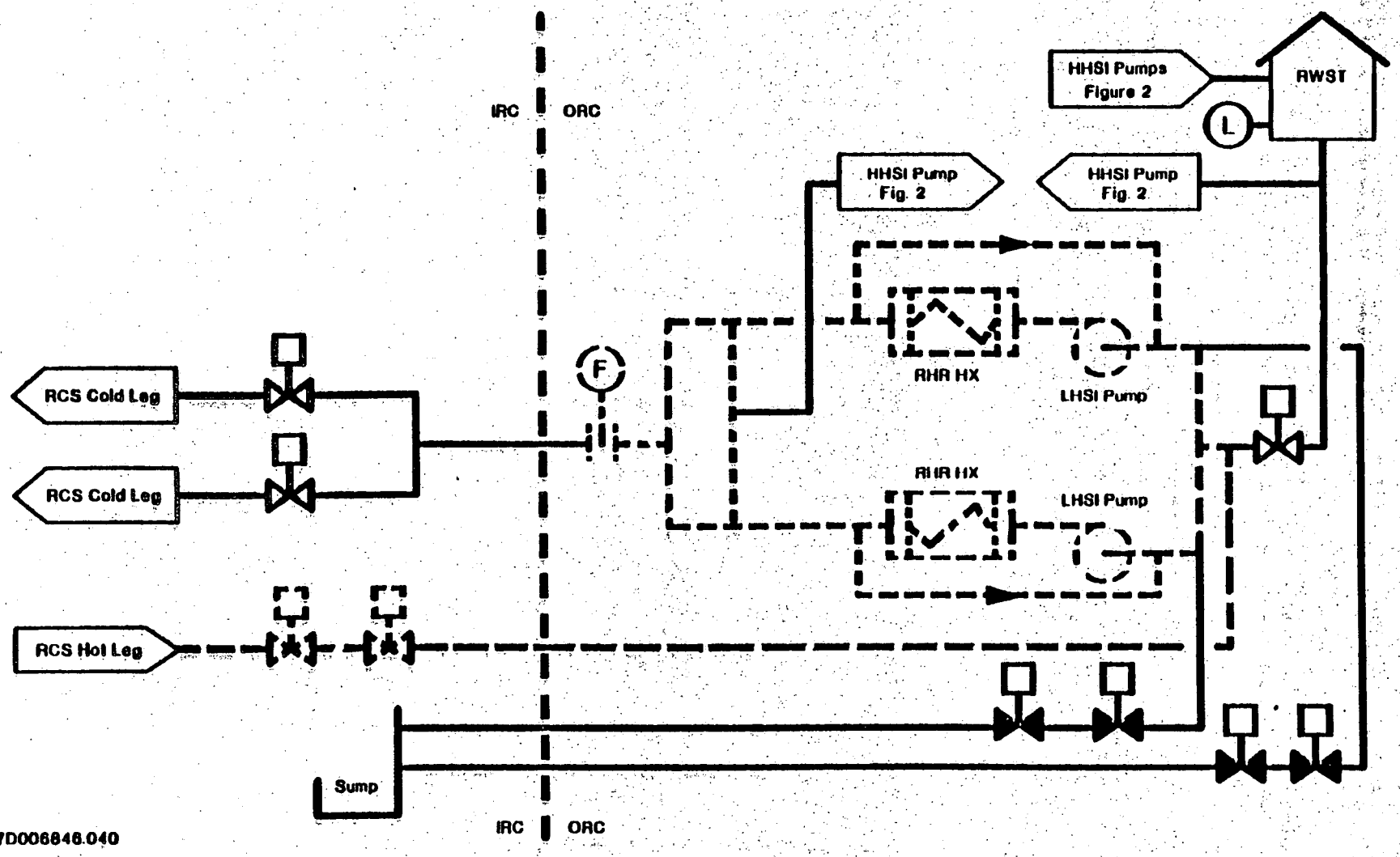

Figure 4. SI-ACCUMULATOR SUBSYSTEM

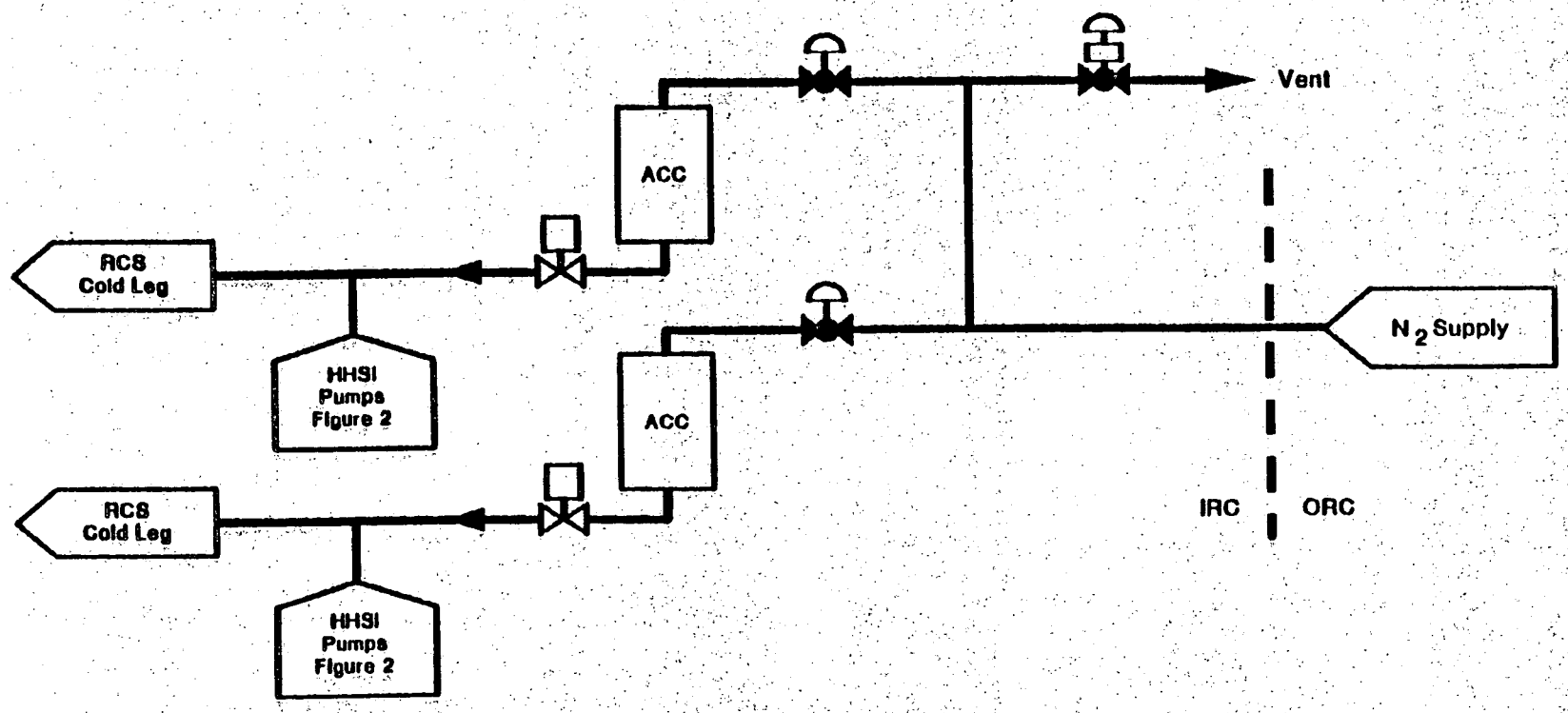

557D006846.041

pump suction is aligned to one RCS hot leg and the RHR pump discharge is aligned to all RCS cold legs.

Portions of the RHR system also function as part of the low-head SI subsystem. This shared function is described in Section 2.8.

The reference plant residual heat removal system is shown in Figure 5.

2.10 Chemical and Volume Control System

The chemical and volume control system (CVCS) provides water to the reactor coolant system and provides core reactivity control for normal operations and any event that does not require ESF operation.

The CVCS consists of charging and letdown capability for control of RCS inventory. Letdown capability is provided by two letdown paths (the letdown line and the excess letdown line, with the excess letdown line providing a lower capacity alternate letdown path to the letdown line). Charging capability is provided by three positive displacement charging pumps that deliver flow to the RCS through a charging line and RCP seal injection lines. The RCP seal injection lines deliver to each RCP and provide RCP seal cooling. A single RCP seal return line returns RCP seal leakoff flow to the suction of the charging pumps. The charging pumps automatically stop on an SI signal and the letdown, charging and RCP seal return lines are automatically isolated on a containment isolation Phase A signal.

Suction flow to the charging pumps is provided by the volume control tank (VCT) which is connected to the letdown line or by the refueling water storage tank (RWST) located in the SI system. The charging pumps suction is normally aligned to the VCT, but is automatically transferred to the RWST on a VCT low-low level signal.

The CVCS includes a boric acid tank (BAT) that provides boric acid solution to the VCT or to the suction of the charging pumps for core reactivity control. The BAT contains 12 weight percent (21000 ppm boron) boric acid solution.

Figure 5. RESIDUAL HEAT REMOVAL SYSTEM

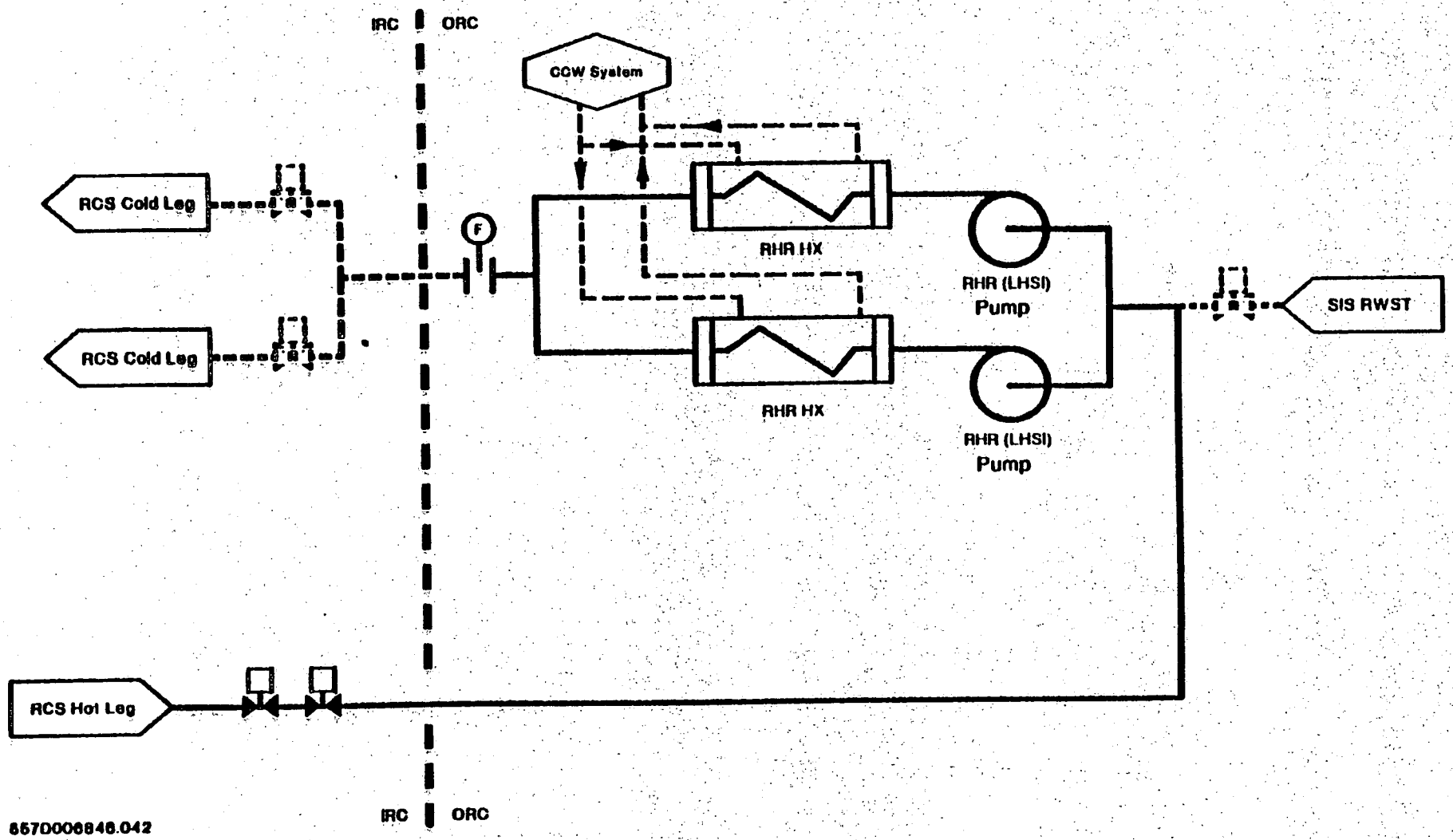

Portions of the CVCS (e.g., the BAT) also function as part of the high-head SI subsystem. This shared function is described in Section 2.8.

The reference plant CVCS is shown in Figure 6.

2.11 Component Cooling Water System

The component cooling water (CCW) system provides heat removal from potentially radioactive system processes and equipment, including the following equipment:

- o RHR heat exchangers
- o Seal water heat exchanger
- o Containment fan coolers
- o RCPs (motor bearing oil coolers and thermal barrier)

The reference plant CCW system for supplying cooling water to the RCPs is shown in Figure 7.

2.12 Service Water System

The service water (SW) system provides heat removal from non-radioactive system processes and equipment and the CCW system to the ultimate heat sink.

2.13 Containment Spray System

The containment spray system provides containment pressure suppression and airborne fission product removal for events that require ESF operation.

The containment spray system is designed to operate in two modes:

- o Injection mode

The injection mode is defined as that configuration in which water is delivered from the RWST to the containment atmosphere.

Figure 6. CHEMICAL AND VOLULME CONTROL SYSTEM

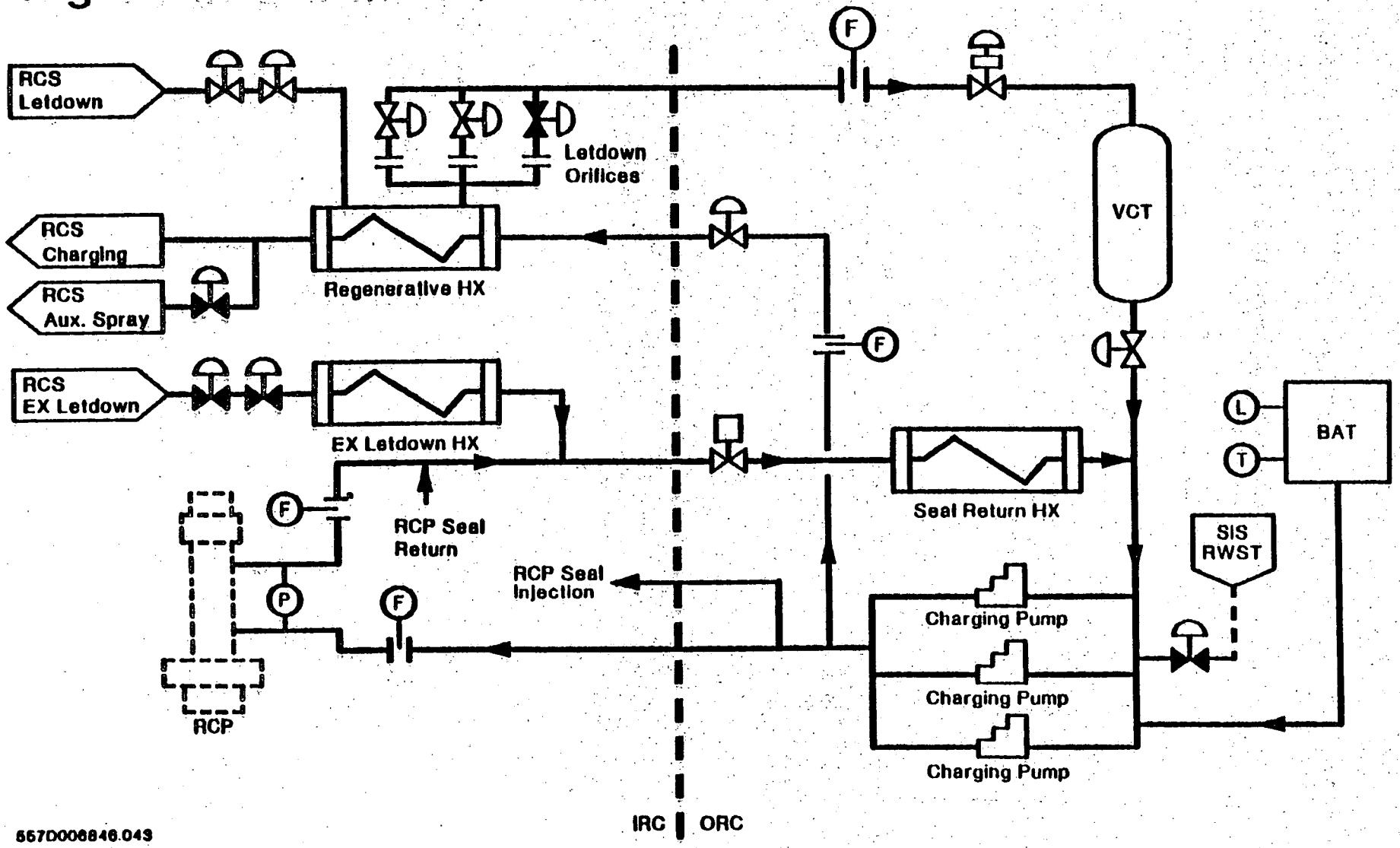

Figure 7. COMPONENT COOLING WATER TO REACTOR COOLANT PUMPS

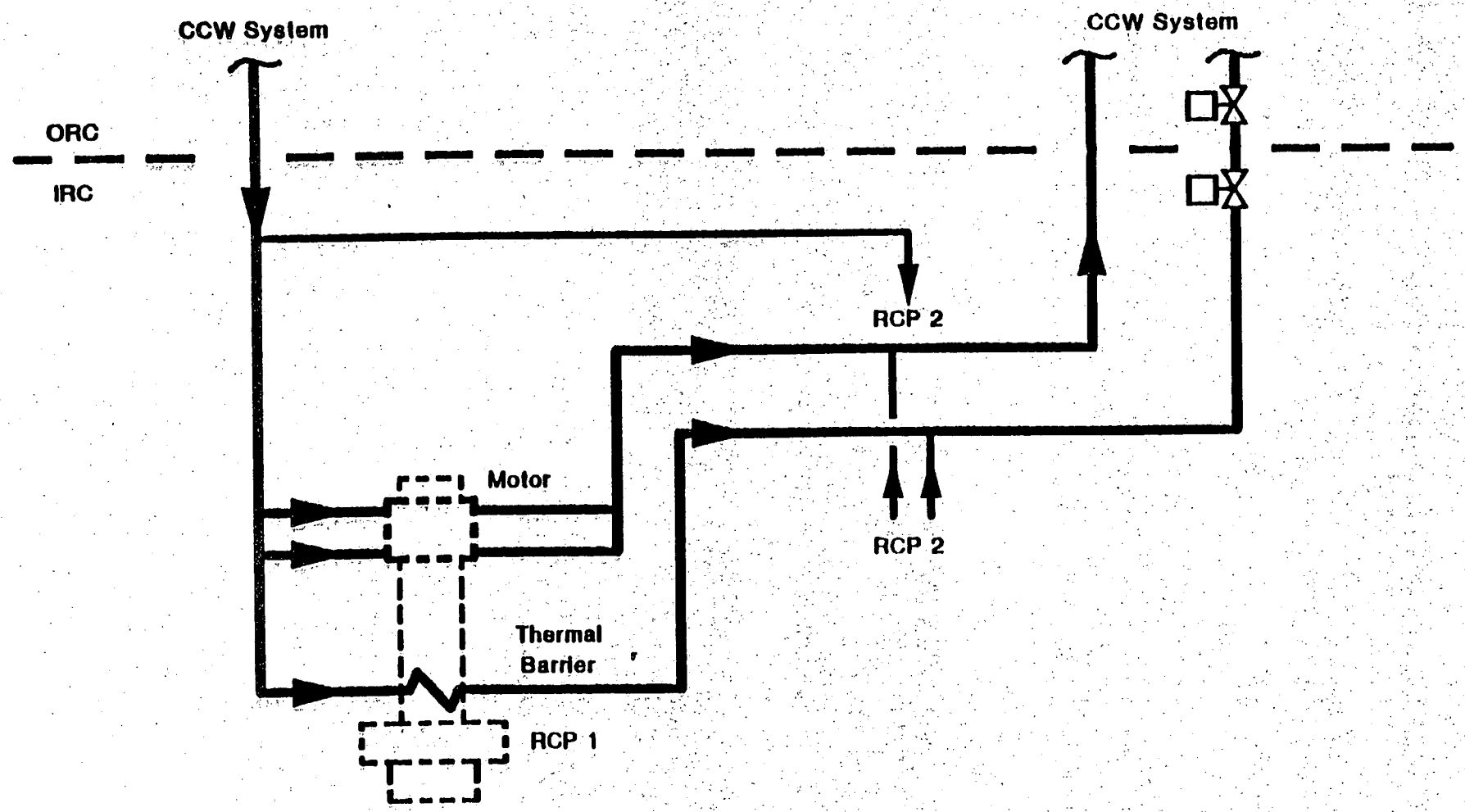

o Recirculation mode

The recirculation mode is defined as that configuration in which water is recirculated from the containment recirculation sump to the containment atmosphere. The piping and valves which connect the containment recirculation sump to the containment spray system are separate from the piping and valves which connect the containment recirculation sump to the low-head SI subsystem.

The containment spray system includes two centrifugal containment spray pumps.

The reference plant containment spray system is shown in Figure 8.

2.14 Containment Atmosphere Control System

The containment atmosphere control system provides containment atmosphere heat removal, filtration, and combustible gas mixture control. It includes the containment fan coolers, containment electric hydrogen recombiners and containment ventilation equipment that provide for mixing of the containment atmosphere.

The fan coolers are used for containment heat removal during emergency transients.

2.15 Main Steam System

The main steam system provides controlled heat removal from the reactor coolant system via the steam generators. It consists of separate main steamlines from each steam generator that join to form a common steam header leading to the turbine-generator and condenser. The steam generators can be isolated from the main steam header by main steamline isolation and bypass valves located in the individual main steamlines. The valves can be selectively closed via operator action in the control room to isolate a specific steam generator. All main steamline isolation and bypass valves automatically close on a main steamline isolation signal.

Figure 8. CONTAINMENT SPRAY SYSTEM

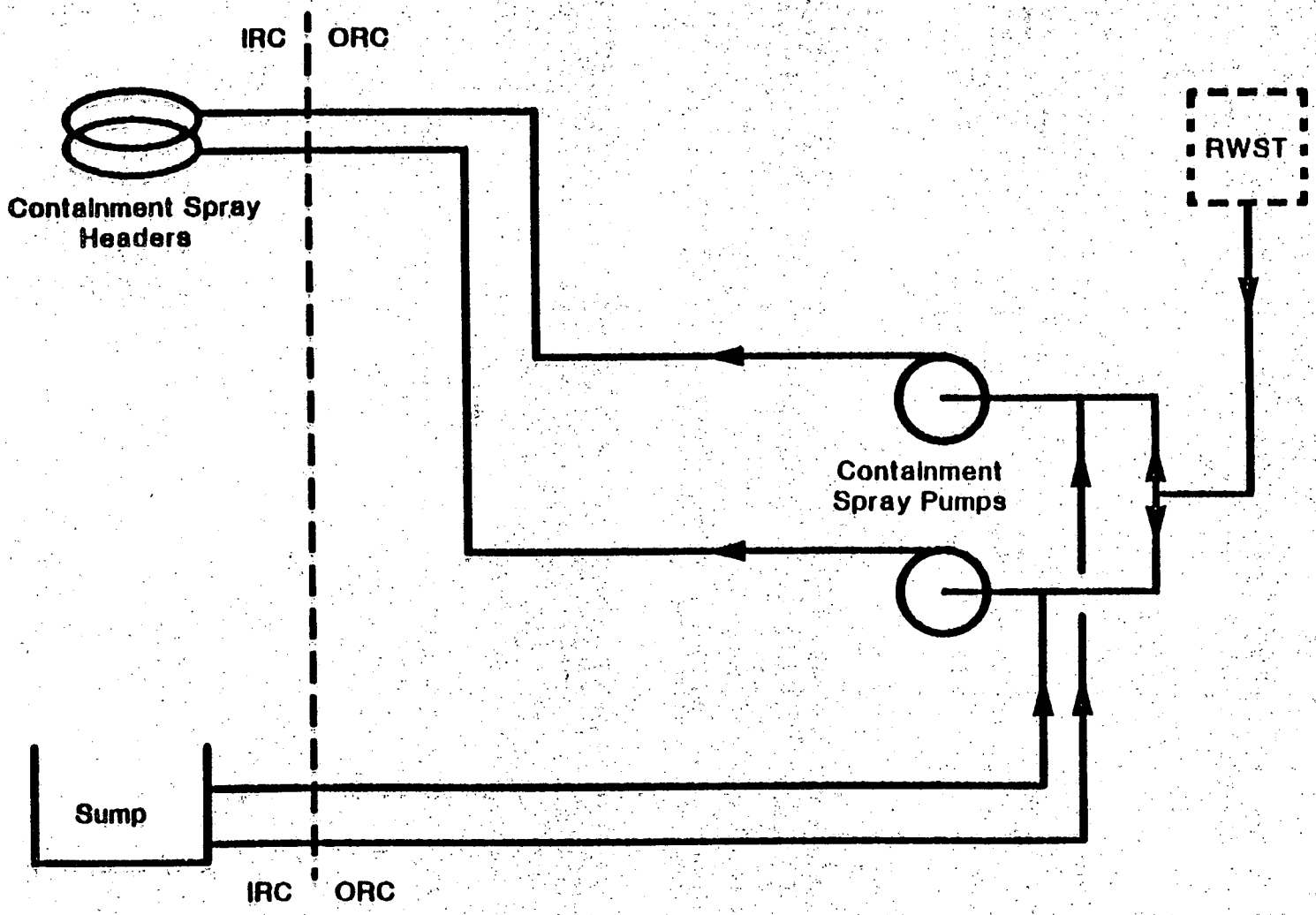

657D006846.045

Main steam release capability is provided via the condenser steam dump system and the atmospheric steam dump system. The condenser steam dump system uses the main steam header and steam dump valves to the condenser. The atmospheric steam dump system uses power operated relief valves upstream of the main steamline isolation valves to release steam to the atmosphere.

Each main steamline contains ASME code safety valves for overpressure protection. Steam supply lines from the main steamlines to the turbine-driven AFW pump are provided from both steam generators. The steam supply lines include isolation valves for initiation and isolation of steam supply to the turbine-driven AFW pump.

The design and normal operating (no-load) pressures of the main steam system are approximately 1185 psig and 1100 psig, respectively.
The setpoint pressures of the main steamline safety valves and steamline PORVs are approximately 1185 psig (lowest valve setpoint) and 1125 psig, respectively. In the "pressure control mode," condenser steam dumps are set to maintain no-load pressure.

The reference plant main steam system is shown in Figure 9.

2.16 Main Feedwater and Condensate System

The main feedwater and condensate system provides water to the secondary side of the steam generators during plant power operation. It consists of separate main feedwater lines to each steam generator that originate from a common main feedwater header. The steam generators can be isolated from the main feedwater header by feedwater flow control valves, bypass valves and isolation valves located in the individual main feedwater lines.

The main feedwater system includes one motor-driven and two turbine-driven feedwater pumps. The condensate system includes only motor-driven condensate pumps. The discharge shutoff pressure of the condensate pumps is approximately 600 psig.

Figure 9. MAIN STEAM SYSTEM

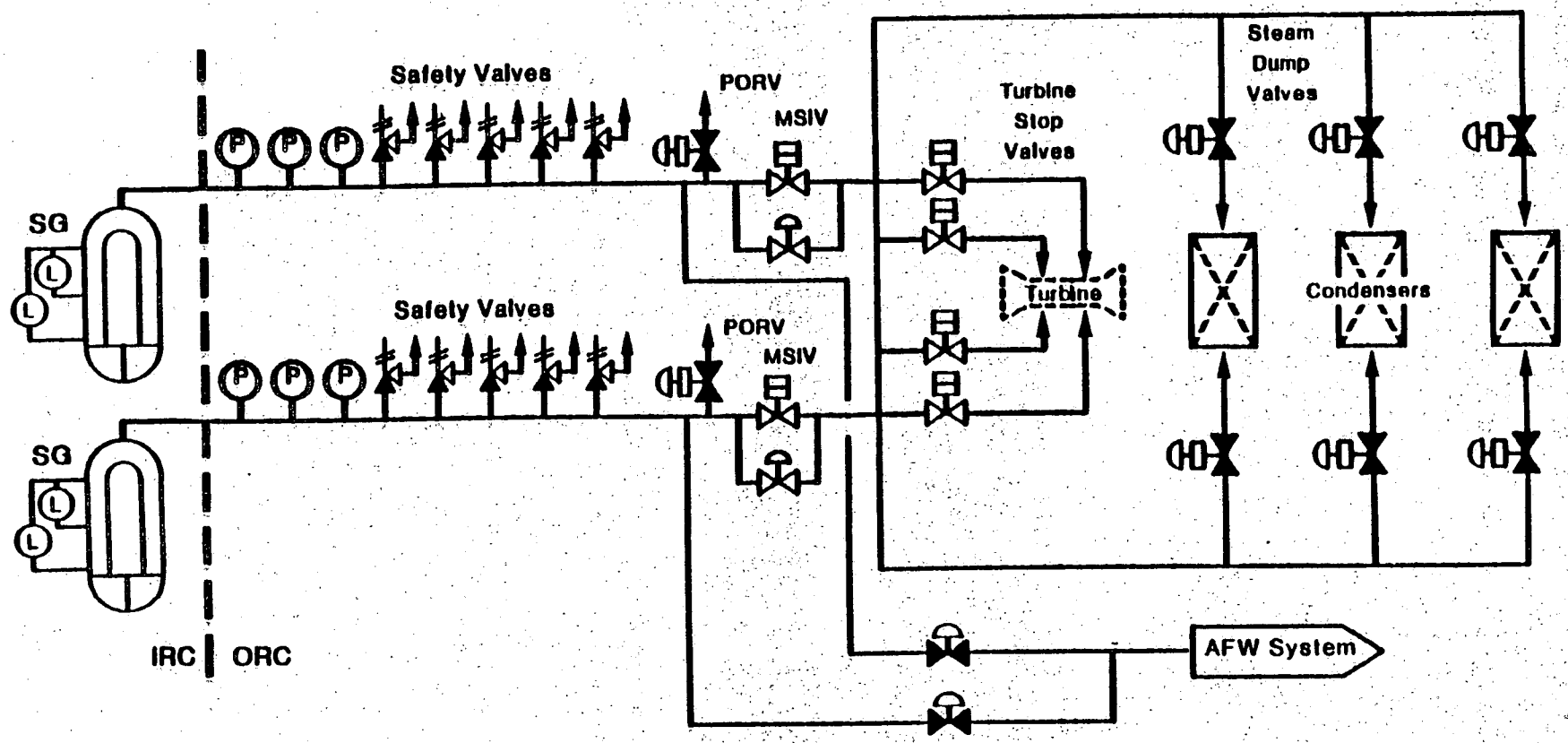

557D006846M.046

2.17 Auxiliary Feedwater System

The auxiliary feedwater (AFW) system provides coolant to the secondary side of the steam generators during plant shutdown operations and for events that require ESF operation. It consists of two motor-driven AFW pumps and one turbine-driven AFW pump that deliver water from the condensate storage tank (CST) to each steam generator. Each motor-driven AFW pump can be aligned to one steam generator. The turbine-driven AFW pump can be aligned to both steam generators.

The AFW pumps can be aligned to alternate water supplies if the CST inventory is depleted. The AFW system includes capability to permit AFW flow to be isolated to any steam generator while continuing to supply AFW flow to the other steam generators.

The reference plant AFW system is shown in Figure 10.

2.18 Steam Generator Blowdown System

The steam generator blowdown system provides letdown from the secondary side of the steam generators. It consists of separate blowdown lines from each steam generator that join to form a common header to a recirculation or discharge location. The steam generators can be isolated by blowdown isolation valves located in the individual blowdown lines.

2.19 Sampling System

The sampling system provides means for sampling process systems. It consists of the sampling system equipment that can be used to sample the RCS, steam generators and containment recirculation sump.

Figure 10. AUXILIARY FEEDWATER SYSTEM

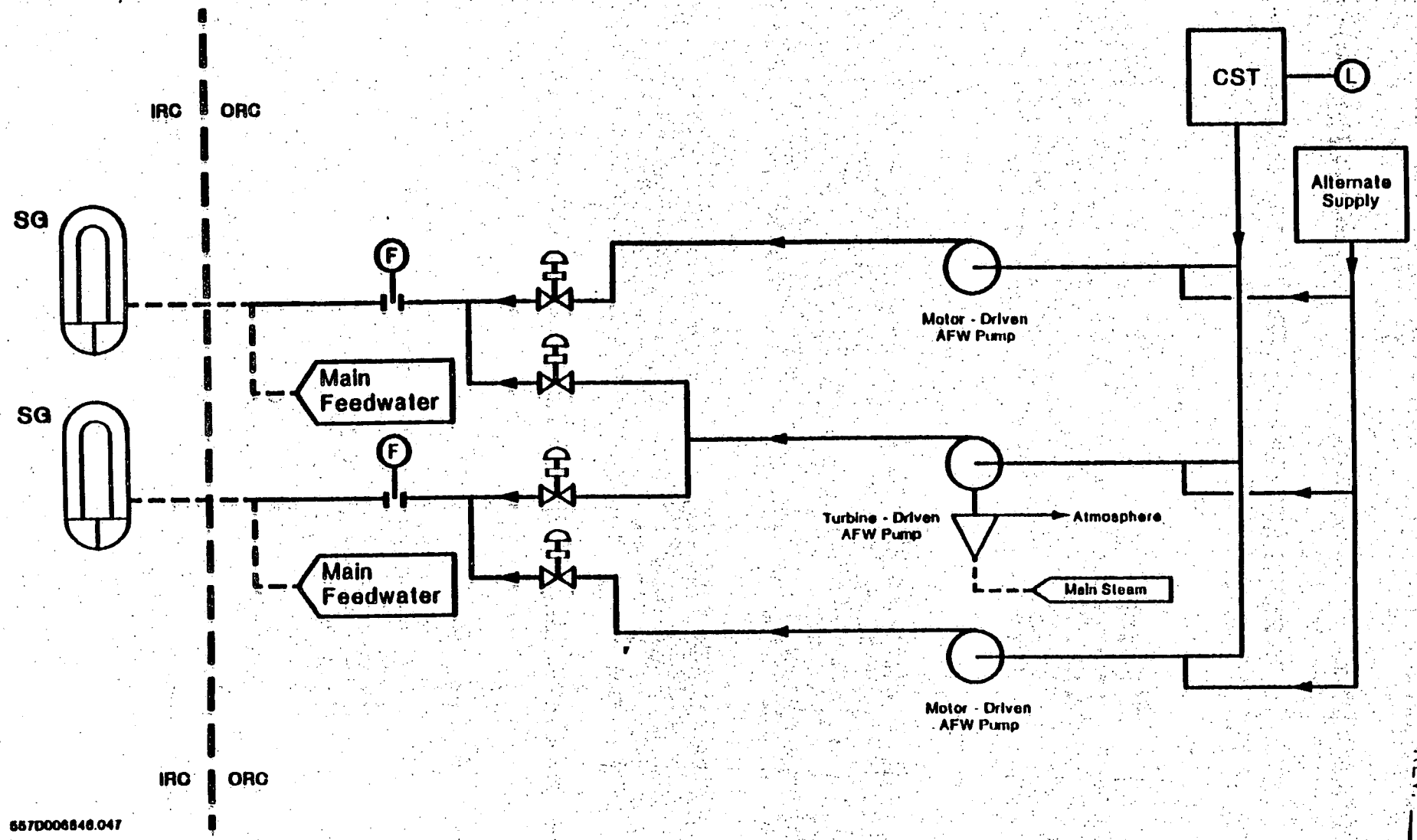

2.20 Spent Fuel Storage and Cooling System

The spent fuel storage and cooling system controls fuel storage positions to ensure a subcritical geometric configuration and provides heat removal to maintain stored fuel within specified temperature limits. It includes the level instrumentation for the spent fuel pit.

2.21 Control Rod Drive Mechanism Cooling System

The control rod drive mechanism (CRDM) cooling system provides heat removal from the control rod drive mechanisms. It consists of the ventilation fans used to circulate air around the control rod drive mechanisms.

2.22 Control Rod Control System

The control rod control system controls the position of the control rods in the reactor core. It includes those controls used to manually insert control rods.

2.23 Turbine Control System

The turbine control system controls the turbine-generator. It includes those controls used to manually runback the turbine-generator.

2.24 Electrical Power System

The electrical power system provides ac and dc electrical power to equipment that require electrical power to accomplish their functions. It consists of an offsite ac power supply and onsite emergency ac and dc powered supplies. The emergency ac power supply is a two train system powered by separate diesel-generators. The dc power supply is a two train system powered by separate battery banks. Vital ac instrument power can be supplied by either the emergency ac power supply or the dc power supply via inverters.

The emergency diesel-generators automatically start on the following:

- o SI signal
- o Blackout signal (generated by low voltage on normal power supplies feeding ac emergency buses)

The diesel-generators automatically energize their associated emergency buses if offsite power is not available. The following major loads are sequenced on the energized ac emergency busses in accordance with associated start signal.

- o Blackout signal:
  - o Charging pumps
  - o CCW pumps
  - o SW pumps
  - o Containment fan coolers
- o SI signal:
  - o High-head SI pumps
  - o Low-head SI pumps
  - o CCW pumps (will not automatically start if blackout signal exists)
  - o SW pumps
  - o Containment fan coolers
- o Containment spray signal:
  - o Containment spray pumps

2.25 Pneumatic Power System

The pneumatic power system supp ies pneumatic power (typically control air) to equipment that require pneumati: power to accomplish their functions. Equipment in this category incl ıde:

- o Pressurizer PORVs
- o Steam generator PORVs
- o Condenser steam dump valves
- o Letdown line isolation valves

The air supply to equipment located inside containment is automatically isolated on a containment isolation Phase A signal which closes the containment isolation valves in the air supply line(s).

3. PLANT INSTRUMENTATION AND CONTROLS

The reference plant consists of instrumentation and controls necessary to operate the reference plant systems in response to the emergency transient. Instrumentation and controls are defined to the extent necessary to maximize technical guidance with respect to system operation while maximizing the generic applicability of the technical guidance.

The instrumentation and controls associated with the reference plant systems are identified in Table 3. These instruments and controls are within the defined scope of the reference plant and specifically identified in the ERGs. These instruments and controls are also consistent with the figures in Section 2. Plant-specific systems utilize instruments and controls in addition to those itemized in Table 3. Table 3 is provided to aid the user of this document in identifying and comparing the reference plant instrumentation and controls to the plant-specific instrumentation and controls.

Instrumentation and control requirements are discussed, as appropriate, in the GENERIC INSTRUMENTATION document in the Generic Issues section of the Executive Volume and in the ERG background documents in the Background Volumes.

TABLE 3

INSTRUMENTATION AND CONTROL REQUIREMENTS

ITEM	REQUIREMENTS	
	I(1)	C(1)
Reactor Trip Actuation System		
Reactor Trip Annunicator	X	-
Reactor Trip and Bypass Breakers	X	-
Reactor Trip Signal	X	X
Turbine Trip Signal	X	X
ESF Actuation System		
SI Annunciator	X	-
SI Signal	X	X
SI Signal Reset/Block	X	X
Low Steamline Pressure SI Actuation Signal Block	X	X
Low PRZR Pressure SI Actuation Signal Block	X	X
Containment Isolation Phase A Signal	X	X
Containment Isolation Phase A Signal Reset	X	X
Containment Isolation Phase B Signal Reset	X	X
Feedwater Isolation Signal Reset	X	X
Containment Spray Signal	X	X
Containment Spray Signal Reset	X	X
Main Steamline Isolation Signal	X	X
Nuclear Instrumentation System		
Power Range Neutron Flux	X	-
Intermediate Range Neutron Flux	X	-
Intermediate Range Startup Rate	X	-

TABLE 3 (Cont)

INSTRUMENTATION AND CONTROL REQUIREMENTS

ITEM	REQUIREMENTS I(1)	REQUIREMENTS C(1)
Nuclear Instrumentation System (Cont)		
Source Range Neutron Flux	X	-
Source Range Startup Rate	X	-
Neutron Flux Recorder	X	X
Source Range Detectors (Energize)	X	X
Control Rod Instrumentation System		
Control Rod Position	X	-
Control Rod Bottom Lights	X	-
Radiation Instrumentation System		
Containment Radiation	X	-
SG Blowdown Radiation	X	-
Condenser Air Ejector Radiation	X	-
Auxiliary Building Radiation	X	-
SG Steamline Radiation	X	-
Containment Instrumentation System		
Containment Pressure	X	-
Containment Temperature	X	-
Containment Recirculation Sump Level	X	-
Containment Hydrogen Concentration (Sample)	X	-
Phase A Containment Isolation Valves	X	X
Phase B Containment Isolation Valves	X	X
Containment Ventilation Isolation Dampers	X	X

TABLE 3 (Cont)

INSTRUMENTATION AND CONTROL REQUIREMENTS

ITEM	REQUIREMENTS	
	I(1)	C(1)
Reactor Coolant System		
RCS Pressure	X	-
PRZR Pressure	X	-
RCS Hot Leg Wide Range Temperature	X	-
RCS Cold Leg Wide Range Temperature	X	-
RCS Average Temperature	X	-
Core Exit TC Temperature	X	-
PRZR Water Temperature	X	-
PRZR Level	X	-
Reactor Vessel Liquid Inventory System (RVLIS)	X	-
Reactor Coolant Pumps	X	X
PRZR PORVs	X	X
PRZR PORV Block Valves	X	X
PRZR Spray Valves	X	X
Reactor Vessel Vent Valves	X	X
Pressurizer Heaters	X	X

TABLE 3 (Cont)

INSTRUMENTATION AND CONTROL REQUIREMENTS

ITEM	REQUIREMENTS	
	I(1)	C(1)
Safety Injection System		
Refueling Water Storage Tank (RWST) Level	X	-
High-Head SI Flow	X	-
High-Head SI Pumps	X	X
Accumulator Isolation Valves	X	X
Accumulator Vent Valves	X	X
Low-Head SI Pump Suction Valves from Containment Recirculation Sump	X	X
Low-Head SI Pump Suction Valves from RWST	X	X
High-Head SI Pump Suction from BAT	X	X
High-Head SI Pump Suction Valves from RWST	X	X
Low-Head SI Pump Discharge Valves to RCS Cold Legs	X	X
SI Valves	X	X

INSTRUMENTATION AND CONTROL REQUIREMENTS

ITEM	REQUIREMENTS I(1)	REQUIREMENTS C(1)
Residual Heat Removal System		
Low-Head SI (RHR) Flow	X	-
Low-Head SI (RHR) Pumps	X	X
Low-Head SI (RHR) Pump Suction Valves from RCS	X	X
Chemical and Volume Control System		
Boric Acid Tank Temperature	X	-
Boric Acid Tank Level	X	-
Charging Flow	X	-
RCP Seal Injection Flow	X	-
Letdown Flow	X	-
RCP Number 1 Seal Leakoff Flow	X	-
RCP Number 1 Seal Differential Pressure	X	-
Charging Pumps	X	X
Charging Pump Suction Valve from RWST	X	X
Charging Pump Suction Valve from VCT	X	X
Charging Line Isolation Valve	X	X
Pressurizer Auxiliary Spray Valve	X	X
RCP Seal Return Outside Containment Isolation Valve	X	X
Letdown Isolation Valves	X	X
Letdown Orifice Isolation Valves	X	X
Low Pressure Letdown Control Valve	X	X
Excess Letdown Isolation Valves	X	X

TABLE 3 (Cont)

INSTRUMENTATION AND CONTROL REQUIREMENTS

ITEM	REQUIREMENTS	
	I(1)	C(1)
Chemical and Volume Control System (Continued)		
VCT Makeup Control System	X	X
VCT Makeup Control System (mode selector)	X	X
Component Cooling Water System		
CCW Pumps	X	X
RCP Thermal Barrier CCW Return Inside Containment Isolation Valve	X	X
RCP Thermal Barrier CCW Return Outside Containment Isolation Valve	X	X
CCW Valves	X	X
Service Water System		
Service Water Pumps	X	X
Service Water Valves	X	X
Containment Spray System		
Containment Spray Pumps	X	X
Containment Spray Valves	X	X

TABLE 3 (Cont)

INSTRUMENTATION AND CONTROL REQUIREMENTS

ITEM	REQUIREMENTS	
	I(1)	C(1)
Containment Atmosphere Control System		
Containment Ventilation Isolation Dampers	X	X
Containment Fan Coolers	X	X
Hydrogen Recombiners	X	X
Containment Air Circulation Equipment	X	X
Containment Filtration Equipment	X	X
Main Steam System		
SG Pressure	X	-
SG Narrow Range Level	X	-
SG Wide Range Level	X	-
SG PORVs	X	X
Condenser Steam Dump Valves	X	X
Main Steamline Isolation Valves	X	X
Main Steamline Isolation Bypass Valves	X	X
Steam Supply Valves to Turbine-Driven AFW Pump	X	X
Turbine Stop Valves	X	-
Main Feedwater and Condensate System		
FW Flow Control Valves	X	X
FW Flow Control Bypass Valves	X	X
FW Isolation Valves	X	X

TABLE 3 (Cont)

INSTRUMENTATION AND CONTROL REQUIREMENTS

ITEM	REQUIREMENTS	
	I(1)	C(1)
Auxiliary Feedwater System		
Auxiliary Feedwater Flow	X	-
Condensate Storage Tank Level	X	-
MD AFW Pumps	X	X
Condensate Storage Tank to Hotwell Isolation Valves	X	X
AFW Valves	X	X
Steam Generator Blowdown System		
SG Blowdown Isolation Valves	X	X
Sampling System		
SG Blowdown Sample Isolation Valves	X	X
Spent Fuel Storage and Cooling System		
Spent Fuel Pit Level	X	-
Control Rod Drive Mechanism Cooling System		
Control Rod Drive Mechanism Fans	X	X

TABLE 3 (Cont)

INSTRUMENTATION AND CONTROL REQUIREMENTS

ITEM	REQUIREMENTS	
	I(1)	C(1)
Control Rod Control System		
Control Rods	X	X
Turbine Control System		
Turbine Runback	X	X
Electric Power System		
Diesel-Generators	X	X
Pneumatic Power System		
Instrument Air Compressor	X	X
Instrument Air Valves	X	X

Notes

(1) I - Instrumentation requirements column

C - Control requirements column

An "X" entry indicates an instrumentation or control requirement within the scope of the reference plant.

A "-" entry indicates no requirement.

APPENDIX F

LIST OF INDIAN POINT 2 SYSTEM DESCRIPTIONS

INDIAN POINT 2 SYSTEM DESCRIPTIONS

NUMBER	TITLE	REVISION, DATE
1	Reactor Coolant System	3, 2/81
3	Chemical & Volume Control System	3, 2/81
4.1	Component Coolant Loop	1, 2/81
4.2	Residual Heat Removal Loop	3, 2/81
4.3	Spent Fuel Pit Cooling Loop	1, 2/81
6	Primary Make-Up Water System	2, 2/81
9	Primary Sampling System	1, 3/81
10.1	Safety Injection	3, 2/81
10.2	Containment Spray System	1, 2/81
10.3	Containment Cooling & Filtration System	1, 2/81
10.4	Isolation Valve Seal Water System	2, 2/81
10.5	Weld Channel & Containment Pentration Pressurization System	2, 1/81
10.7	Containment Isolation System	1, 2/81
10.9	Post Accident Hydrogen Control System	2, 2/81
11	Ventilation Systems	2, 2/81
12	Radiation Monitoring and Protection System	2, 2/81
18	Main and Reheat Steam	3, 2/81
20	Condensate System	2, 2/81
21	Feedwater System	3, 2/81
24	Service Water Systems	1, 2/81
27.1	Electrical Systems	3, 2/81
27.3	Emergency Diesels	1, 2/81
28	Overall Unit Protection System	3, 2/81
29.2	Instrument Air System	2, 2/81
29.3	Station Air System	2, 2/81

Attachment 4

Generation Support Administrative Directive 6;
EOP Validation Process

Consolidated Edison Company of New York, Inc.
Indian Point Unit No. 2
February , 1987

INDIAN POINT STATION

Generation Support Section

GENERATION SUPPORT ADMINISTRATIVE DIRECTIVE 6 REV. 0

EMERGENCY OPERATING PROCEDURES VALIDATION PROCESS

Written by

Reviewed by

Concurrence by
General Manager / Section Head

Alice Hayes #1074, 2/3/87
SNSC Review Mtg. No. / Date

2/3/87
Approved by Date

Effective Date

Q.A. Program Document

TABLE OF CONTENTS

Section		Page
1	INTRODUCTION	1
	1.1 Purpose	1
	1.2 Scope	1
	1.3 Applicability	1
2	RESPONSIBILITIES	1
	2.1 Operations Manager	1
	2.2 Generation Support Manager	1
3	PROCESS FOR EOP VALIDATION	2
	3.1 Preparation	2
	3.2 Assessment	3
	3.3 Resolution	3
4	DOCUMENTATION	3
5	VALIDATION EVALUATION CRITERIA	3

ATTACHMENTS

1	CHECKLIST FOR SIMULATOR METHOD OF VALIDATION	5
2	CHECKLIST FOR TABLE-TOP/WALK-THROUGH METHODS OF VALIDATION	9
3	EVALUATION CRITERIA	13
4	DEVIATION SHEET	20
5	VALIDATION FORM	22

EMERGENCY OPERATING PROCEDURES VALIDATION PROCESS

1 INTRODUCTION

1.1 Purpose

The purpose of this procedure is to guide the administrative process used in validating any Indian Point Two emergency operating procedures (EOPs) revision and to assign responsibilities for the process.

1.2 Scope

This procedure identifies the aspects of the EOP validation program process and gives guidance that encompasses the simulator validation, walk-through, and table-top methods. Specific guidance for each method is presented in appropriate checklists (see Attachments 1 and 2).

1.3 Applicability

This procedure applies to EOP validation prior to any EOP Revision implementation for Indian Point Two.

2 RESPONSIBILITIES

2.1 Operations Manager

The Operations Manager shall approve all EOP revisions.

2.2 Generation Support Manager

The Generation Support Manager shall be responsible to ensure the following tasks are performed by an SRO licensed person, other than the writer, who can make management decisions:

- Managing the validation program
- Determining if validation is needed and its scope (Attachment 5)

- Selecting the validation method or methods

NOTES: 1 Simulator scenario will be used for all validations unless it is determined the simulator cannot perform the task to validate the step.

2 It is recommended that the initial EOP validation method and scenario be used for comparison purposes.

- Appointing and training an observation team
- Completing applicable portions of the EOP Validation Form
- Arranging operating team(s) for the training/ validation sessions
- Scheduling simulator time for validation training and testing purposes as appropriate
- Reviewing discrepancies and resolutions forwarded by the observation team leader
- Forwarding recommended resolutions and procedure changes to the Operations Manager for approval

3 PROCESS FOR EOP VALIDATION

Regardless of the validation method, the EOP validation process can be described by three phases: preparation, assessment, and resolution.

3.1 Preparation

Each validation method will use the applicable evaluation criteria presented in Attachment 3, and the scenario to be used will be recorded on the appropriate scenario form:

- Simulator Scenario Form IPV-3 (Attachment 1)
- Table-Top/Walk Through Scenario Form IPV-2 (Attachment 2)

NOTE: Simulator scenario is the preferred method

Further specific guidance in preparation for each validation method is presented in the checklist for the validation method (Attachments 1 and 2).

3.2 Assessment

Specific guidance for assessment using each validation method is presented on the checklist for each validation method (Attachments 1 and 2).

3.3 Resolution

Resolution will be accomplished by reviewing discrepancies and comments presented on the Deviation Sheet, Form IPV-4 (Attachment 4). The observation team and operator crew will propose solutions, if needed, and forward all necessary documentation to the Generation Support Manager for approval.

4 DOCUMENTATION

The documented items needed to provide a history of the validation program are specified on each validation method checklist (Attachments 1 and 2). These items will be maintained as a validation package by the EOP maintenance coordinator.

5 VALIDATION EVALUATION CRITERIA

In order to accurately assess the effectiveness of the EOPs during simulated accident conditions, specific criteria have been developed. The EOP evaluation criteria is broken down into the following two major areas:

- o usability
  - level of detail
  - understandability
- o operational correctness
  - plant compatibility
  - operator compatibility

The questions in each area were assembled from the evaluation of the ERG interfaces.

The success of the validation is contingent upon input from both the observation team and the operator crew. Without comprehensive input from both teams, the results of the validation may not be all inclusive. Input from the team and crew is broken down into the following three basic parts:

- o observation team member input
- o Senior Reactor Operator (SRO and STA input)
- o input from operators other than the SS and STA

Attachment 3 contains the evaluation criteria sheets to be used by each input group. The observation team member should use the evaluation criteria as a detailed guide for recording any possible procedure problems. The operator crew should be very familiar with the evaluation criteria in order to provide more comprehensive input during the debriefings. At the conclusion of each test, the operators should use their evaluation criteria to record any identified procedure problems. During the debriefing sessions, the three input groups can each provide their comments based on their experiences or observations

Some of the criteria may not be applicable for each validation method. Any criterion which is not applicable (N/A) for one or more of the validation methods will contain the following information in parentheses at the conclusion of the step: (N/A specific method or methods)
Example: (N/A T-T and W-T)

Validation Methods
S: simulator
W-T: walk-through
T-T: table-top

ATTACHMENT 1

CHECKLIST FOR SIMULATOR METHOD OF VALIDATION

1 PURPOSE

The purpose of this checklist is to provide guidance for the simulator method of validating revised EOPs.

2 VALIDATION PROCESS

EOP validation will be conducted in three parts: preparation, assessment, and resolution.

2.1 Preparation

The designated observation team leader shall be responsible for the following:

- using and completing the EOP Validation Form
- reviewing the scope of the validation as directed by the Generation Support Manager or his representative
- developing or modifying scenario runs to support the scope of validation
- completing the upper portion of the Simulator Scenario Form
- developing data collection techniques
- evaluating plant-to-simulator characteristics
- making any required adjustments to the EOP set to use on the simulator
- selecting and scheduling the operating crews
- selecting the evaluation criteria located in Attachment 3 to support the scope of validation
- selecting operators that are trained to the level expected of all the operators (RO must have RO license or equivalent, SRO must have SRO license or equivalent)
- ensuring the availability of EOPs and supporting procedures

2.2 Assessment

The designated observation team leader shall perform the following duties:

- o brief the operating crew on the scope of the validation and how the assessment will be conducted
- o ensure the observation team members do not interfere or interact with the operating crew
- o brief the operating crew on initial plant conditions for each scenario run
- o conduct a debriefing with the operators as soon as possible after each scenario run with the following sequence:
  - brief the participants on the purpose and objectives of the debriefing
  - have operators and observation team members present problems and deviations which they have identified during the assessment
  - have operators and observation team members provide possible reasons for the problems
  - summarize the findings of the debriefing
- o record deviations and resolutions on Form IPV-4 (Attachment 4)

2.3 Resolution

The designated observation team leader shall perform the following duties:

- o review comments and deviations
- o propose resolutions on Form IPV-4 (Attachment 4) for the Generation Support Manager
- o submit the validation package to the Generation Support Manager

The Generation Support Manager will perform the following duties:

- o review proposed resolutions with appropriate staff
- o select resolutions for incorporation in the EOPs
- o present the revised EOPs to the Operations Manager for approval

3 DOCUMENTATION

All documentation will be submitted with the validation package to the EOP maintenance coordinator.

INDIAN POINT TWO
SIMULATOR SCENARIO FORM IPV-3

SCENARIO NO.:

PROCEDURE NO.: _____

REVISION: _____

TITLE: _____

DATE: _____ IC NO: _____

PURPOSE: _____

SCENARIO DESCRIPTION: _____

INITIAL PLANT CONDITIONS: _____

SIMULATOR SEQUENCE OF MALFUNCTIONS:

DESCRIPTION	NO.	OPTIONS

SPECIAL INSTRUCTIONS:

ATTACHMENT 2

CHECKLIST FOR TABLE-TOP/WALK-THROUGH METHODS OF VALIDATION

1 PURPOSE

The purpose of this checklist is to provide guidance for the table-top and walk-through methods of validating EOPs.

2 VALIDATION PROCESS

EOP validation will be conducted in three parts: preparation, assessment, and resolution.

2.1 Preparation

The designated observation team leader shall be responsible for the following:

- using and completing the EOP Validation Form
- reviewing the scope of the validation designated by the Generation Support manager or his representative
- developing or modifying scenarios to support the scope of validation and filling out the Table-Top/Walk-Through Scenario Form
- modifying/selecting the developed evaluation criteria to support the scope of validation (see Attachment 3)
- selecting operators that are representative of the training level expected of all the operators in the use of the EOPs
- scheduling the needed resources for the table-top method
  - observation team
  - operator(s) involved
  - conference room
  - sets of EOPs and support procedures
- scheduling the needed resources for the walk-through method
  - observation team
  - operator(s) involved
  - control room or control room mock-up
  - set of EOPs and support procedures

2.2 Assessment

The designated observation team leader shall perform the following duties:

- o brief the operator(s) on the scope of validation and how the assessment will be conducted
- o follow the developed or modified scenario by first giving the plant initial conditions and then give the changing plant parameters while talking or walking through the procedures
- o stop the talk-through or walk-through assessment for discussion of any identified discrepancies
- o conduct a debriefing with the operators as soon as possible after each walk-through assessment with the following sequence:
  - brief the participants on the purpose and objectives for debriefing
  - have operators and observation team members present problems and discrepancies which they have identified during assessment
  - have operators and observation team members provide possible reasons for problems
  - summarize the findings of the debriefing for the operator team and the observation team
- o record deviations and resolutions on Form IPV-4 (Attachment 4)

2.3 Resolution

The designated observation team leader shall perform the following duties:

- o review comments and deviations
- o propose resolutions on Form IPV-4 (Attachment 4) for the operations staff manager
- o submit the validation package to the Generation Support Manager

The Generation Support Manager shall perform the following duties:

- o review proposed resolutions with appropriate staff
- o select resolutions for incorporation in the EOPs
- o present the revised EOPs to the Operations Manager for approval

3 DOCUMENTATION

All documentation will be submitted as a validation package to the EOP maintenance coordinator.

INDIAN POINT TWO

TABLE-TOP/WALK-THROUGH SCENARIO FORM IPV-2

EOP NUMBER: _____

TITLE: _____

DATE: _____

PURPOSE: _____

SCENARIO DESCRIPTION: _____

INITIAL PLANT CONDITIONS: _____

PROCEDURE STEP DESCRIPTION	PLANT PARAMETER/ SYMPTOM TO CAUSE TRANSITION	TRANSITION TO (PROCEDURE, STEP)

ATTACHMENT 3

EVALUATION CRITERIA

Observation Team Members:

_____ _____
_____ _____
_____ _____

Shift Supervisor/STA:

_____ _____

Control Room Operators:

_____ _____

Alternate: _____

Date: _____ EOP(s): _____ Rev.: _____

I. USABILITY

A. Level of Detail

1. Is sufficient information provided in order to perform the specified actions for each step?

EOP	Step No.	Explanation

2. Are the actions explicit or adequately described at each decision point (use of "OR")?

EOP	Step No.	Explanation

3. Are the labeling, abbreviations, and location information that is provided in the EOP sufficient to assist the operator in finding needed equipment?

EOP	Step No.	Explanation

4. Does the EOP contain all information needed to manage the emergency condition?

EOP	Explanation

5. Are the contingency actions sufficient to address the observed symptoms?

EOP	Step No.	Explanation

6. Are the titles and numbers sufficiently descriptive to enable the operator to find referenced and branched procedures?

EOP	Step No.	Explanation

B. Understandability

1. Is the EOP easy to read?

EOP	Step No.	Explanation

2. Are the figures and tables easy to read with sufficient accuracy?

EOP	Figure/Table No.	Explanation

3. Can the values on figures and charts be easily determined?

EOP	Figure/Chart No.	Explanation

4. Are caution and note statements readily understandable and complied with?

EOP	Step No.	Explanation

5. Are the EOP steps readily understandable and complied with?

EOP	Step No.	Explanation

6. Is the organization of the EOPs understood?

_____
_____
_____

II. OPERATIONAL CORRECTNESS

A. Plant Compatibility

1. Can the actions specified in the procedure be performed in the designated sequence? (N/A T-T)

EOP	Step No.	Explanation

2. Have all alternate success paths been removed from all procedures outside the EOPs?

EOP	Step No.	Explanation

3. Can the information from the plant instrumentation be easily obtained, as specified by the EOP? (N/A T-T)

EOP	Step No.	Explanation

4. Are adequate plant symptoms that enable the operator to transition to the applicable EOP provided in the EOP? (N/A T-T and W-T)

EOP	Step No.	Explanation

5. Are the EOP entry conditions appropriate for the plant symptoms displayed to the operator? (N/A T-T and W-T)

EOP	Step No.	Explanation

6. Is information or equipment not required to accomplish the task specified in the EOP? (N/A T-T)

EOP	Step No.	Explanation

7. Do the plant responses agree with the EOP basis? (N/A T-T and W-T)

EOP	Step No.	Explanation

8. Are the instrument readings and tolerances stated in the EOP consistent with the instrument values displayed on the instruments? (N/A T-T)

EOP	Step No.	Explanation

9. Is the EOP physically compatible with the work situation (too bulky to hold, binding would not allow them to lay flat in the work space, insufficient area to allow use of EOPs)? (N/A T-T)

Explanation

10. Are the instrument readings and tolerances specified by the EOP for remotely located instruments accurate? (N/A T-T and S)

EOP	Step No.	Explanation

11. Could the CSF Status Trees by properly monitored? (N/A T-T)

Tree	Explanation

B. Operator Compatibility

1. If time intervals are specified, can the procedure action steps be performed on the plant within or at the designated time intervals? (N/A T-T)

EOP	Step No.	Explanation

2. Can the procedure action steps be performed by the operating shift? (N/A T-T)

EOP	Step No.	Explanation

3. If specific actions are assigned to individual shift personnel, does the EOP adequately aid in the coordination of actions among shift personnel where necessary? (N/A T-T)

EOP	Step No.	Explanation

4. Can the operating shift follow the designated action step sequences? (N/A T-T)

EOP	Step No.	Explanation

5. Can the particular steps or sets of steps be readily located when required? (N/A T-T)

EOP	Step No.	Explanation

6. Can the EOP exit point be returned to without omitting steps when required? (N/A T-T)

EOP	Step No.	Explanation

7. Can procedure branches be entered at the correct point?

EOP	Step No.	Explanation

8. Are EOP exit points specified adequately?

EOP	Step No.	Explanation

9. Could the foldout page be accessed and used properly?

Explanation

10. Were CSF Status Trees properly monitored and used to control function restoration procedure implementation? (N/A T-T)

Tree	Explanation

11. Were the operators able to distinguish the EOPs from other control room procedures? (N/A T-T)

Explanation

VALIDATION RECORDS FOR

EMERGENCY OPERATING PROCEDURE

IF all questions in Evaluation Criteria are answered Yes, then only this sheet is needed for record retention.

EOP TITLE: _____

EOP NUMBER: _____ Revision No. _____

SCOPE OF VALIDATION: _____

_____

_____

Assessment Completed On: _____

By: _____

ATTACHMENT 4

INDIAN POINT TWO

DEVIATION SHEET IPV-4

EOP: _____ REV.: _____ STEP NUMBER: _____

DEVIATION:

_____

_____

_____

_____

_____

_____

EVALUATOR: _____ DATE: _____

RESOLUTION:

_____

_____

_____

_____

_____

_____

SUPERVISOR: _____ DATE: _____

APPROVED: YES NO (circle one)

OPERATIONS SUPERVISOR: _____ DATE: _____

RESOLUTION INCORPORATED BY: _____ DATE: _____

ATTACHMENT 5

EOP VALIDATION

1 PURPOSE

To provide guidance for determining the degree of validation needed in revising EOPs.

2 PROCESS

2.1 Determine if step change is an administrative change by meeting one of the following conditions:

1 Change is only a change in title of procedure outside the framework of EOPs (example SOPs)

2 Change is only an enhancement to clarify the understanding of the step intent as described in the background document

3 Change is to correct spelling errors or typos

4 Change is a deletion of material no longer being used and covered by a safety review

5 Change is a replacement of curves as a result of Tech Spec amendment (example heatup and cooldown curves)

2.2 IF change is an administrative change, then state on Form IPV-1, "This is an administrative (reason) and no further validation is needed."

2.3 Determine if step to be validated is only used once or is the step repetitive in the EOPs.

2.4 IF step is repetitive in the EOPs, THEN determine when the step is first encountered in the normal flow of the EOPs as defined in the EOP users guide OAD 26.

2.5 Pick a scenario that will enter the beginning of the procedure that contains the step you wish to validate.

2.6 State any special instructions that must be done to exercise the step that is to be validated.

NOTE: This must be done in most cases where you want to exercise an FNO step

2.7 The scenario selected must exercise the step to the level of intent of the step as described in the background document.

ATTACHMENT 5

INDIAN POINT TWO
EOP VALIDATION FORM IPV-1

EOP Title: _____

EOP Number: _____ Revision: _____

Scope of Validation: _____

Validation Method or Methods to be Used: _____

Designated Observation Team Members:

Preparation Completed on _____ By: _____

Assessment Completed on _____ By: _____

Operator Team Members: Qualification: (SRO, RO, Other)

Resolution Completed on _____ By: _____

Documentation Package Forwarded on _____ By: _____

Attachment 5

Generation Support Administrative Directive 7;
EOP Verification Process

Consolidated Edison Company of New York, Inc.
Indian Point Unit No. 2
February , 1987

INDIAN POINT STATION

Generation Support Section

GENERATION SUPPORT ADMINISTRATIVE DIRECTIVE 7 REV.0

EMERGENCY OPERATING PROCEDURES VERIFICATION PROCESS

Written By

Frank Iozzillo
Reviewed By

Concurrence By
General Manager / Section Head

Alice Hayes #1074, 2/3/87
SNSC Review Mtg. No. / Date

2/3/87
Approved By / Date

Effective Date

Q.A. Program Document

TABLE OF CONTENTS

Section		Page
1	INTRODUCTION	1
	1.1 Purpose	1
	1.2 Scope	1
	1.3 Applicability	1
2	DEFINITIONS	1
3	RESPONSIBILITIES	2
	3.1 Operations Manager	2
	3.2 Generation Support Manager	2
4	EOP VERIFICATION PROCESS	2
	4.1 Preparation Phase	2
	4.1.1 Designate Personnel	3
	4.1.2 Obtain and Review the EOP Source Documents	3
	4.2 Assessment Phase	3
	4.3 Resolution Phase	4
	4.4 Documentation Phase	4
ATTACHMENT 1 - EOP Verification Forms/Discrepancy Sheets		5
ATTACHMENT 2 - Evaluation Criteria Checklist		8

EMERGENCY OPERATING PROCEDURES VERIFICATION PROCESS

1 INTRODUCTION

1.1 Purpose

The purpose of this procedure is to guide the administrative process used in the verification of the emergency operating procedures (EOPs) and to assign responsibilities for carrying out the activities of the process.

1.2 Scope

This procedure identifies and directs the phases of the verification process.

1.3 Applicability

This procedure applies to initial EOP implementation and revisions for Indian Point Unit 2.

2 DEFINITIONS

Emergency Operating Procedures (EOPs) - Plant procedures directing operator actions necessary to mitigate the consequences of transients and accidents that cause plant parameters to exceed reactor protection system setpoints, engineered safety features setpoints, or other appropriate technical limits.

Westinghouse Owners Group Emergency Response Guidelines (ERGs) Revision 1, LP Version - Guidelines that provide sound technical bases for the development of EOPs.

EOP Source Documents - Documents or records upon which EOPs are based.

EOP Technical Accuracy - A characteristic of EOPs that indicates the degree to which proper incorporation of generic and/or plant-specific technical information from EOP source documents and plant hardware has been made.

EOP Verification - The evaluation performed to confirm the written correctness of the EOPs and to ensure that the generic and/or plant-specific technical aspects have been properly incorporated.

EOP Written Correctness - A characteristic of EOPs that indicates the degree to which proper incorporation of information from the Indian Point Unit 2 writers guide for EOPs and other appropriate administrative policies has been made.

Symptoms - Plant characteristics that directly or indirectly indicate plant status.

3 RESPONSIBILITIES

3.1 Operations Manager

The Operations Manager shall approve all EOPs and revisions.

3.2 Generation Support Manager

The Generation Support Manager shall have overall responsibility for the EOP verification process. His responsibilities include:

- determining when EOP verification is needed and its scope (Attachment 1)
- managing the EOP verification process
- appointing personnel to perform the technical accuracy evaluation portion of the process
- appointing personnel to perform the written correctness evaluation portion of the process
- approving any verification resolutions

4 EOP VERIFICATION PROCESS

The process of EOP verification consists of four phases: preparation, assessment, resolution and documentation.

4.1 Preparation Phase

The preparation phase consists of the following activities:

- designate personnel to conduct the comparative evaluation
- obtain and review the EOP source documents

4.1.1 DESIGNATE PERSONNEL

The Generation Support Manager shall appoint the necessary personnel as evaluators to conduct the comparative evaluation. Personnel should be appointed based on operating experience and understanding of plant hardware, the EOPs and the writers guide.

4.1.2 OBTAIN AND REVIEW THE EOP SOURCE DOUCMENTS

The listing of EOP source documents is provided on the EOP Verification Forms (Attachment 1) and shall be reviewed by the personnel conducting the assessment phase. These documents shall be reviewed to ensure they are complete, current and applicable.

4.2 Assessment Phase

In the assessment phase the evaluator shall evaluate the EOPs against the source documents and considering the concerns enumerated by the EOP Verification Evaluation Criteria Checklist (Attachment 2). The evaluator also shall:

- Make a general review of each EOP using Section I of the evaluation criteria (Attachment 2) and source documents.

- Document on EOP Verification Forms (Attachment 1) that the PROCEDURE LEVEL EVALUATION was performed, either by checking the acceptable column or by documenting any procedure level discrepancies identified by filling in discrepancy sheets shown on Form #2 (Attachment 1).

- Make a step-by-step review of the EOP using Section II of the evaluation criteria (Attachment 2) and source documents. For each step, CAUTION, or NOTE level discrepancy identified, document concerns by filling in Form #2 (Attachment 1).

  The existence of any step, CAUTION or NOTE level discrepancies is identified by checking and filling in the appropriate block at the bottom of Form #1.

- Complete Form #3 (Attachment 1) of the EOP Verification Forms, attach the completed verification forms and the discrepancy sheets, and forwarded to the Generation Support Manager.

4.3 Resolution Phase

In the resolution phase, the Generation Support Manager shall:

- Review the evaluator's comments and resolve any conflicts between the writers' and evaluators' comments.
- Assign personnel to update applicable source documents and procedures with approved resolutions.

4.4 Documentation Phase

The documentation developed throughout the process will be maintained in accordance with Emergency Operating Procedures Maintenance Program GSAD 3.

Attachment 1

INDIAN POINT UNIT 2

EOP VERIFICATION FORM #1

EOP TITLE: _____

EOP NUMBER: _____ REVISION: _____

SCOPE OF VERIFICATION: _____

EVALUATOR(S): _____

EOP SOURCE DOCUMENTS USED:

1. Emergency Operating Procedures and Background Documents
2. FSAR
3. Indian Point 2 Plant Specific Technical Specifications
4. Emergency Operating Procedures Maintenance Program GSAD 3.
5. Emergency Operating Procedures Writers Guide GSAD 4.
6. Indian Point 2 System Descriptions

PROCEDURE LEVEL EVALUATION

1. WRITTEN CORRECTNESS

AREA	ACCEPTABLE	DISCREPANCY SHEET #(s)
LEGIBILITY	_____	_____
EOP FORMAT CONSISTENCY	_____	_____
IDENTIFICATION INFORMATION	_____	_____
2. TECHNICAL ACCURACY	_____	_____

STEP, CAUTION, NOTE-SPECIFIC VERIFICATION

Are there any Step, CAUTION, or NOTE level discrepancies for this procedure?

_____ YES, DISCREPANCY SHEET #(s) _____ _____ NO

Attachment 1

INDIAN POINT UNIT 2

EOP VERIFICATION FORM #2

DISCREPANCY SHEET

Area of Concern: _____ written correctness

(Check Applicable) _____ technical accuracy

EOP: _____ REV.: _____ STEP NUMBER: _____ (As applicable)

DISCREPANCY:

EVALUATOR: _____ DATE: _____

RESOLUTION:

APPROVED: YES NO (circle one)

GENERATION SUPPORT MANAGER: _____ DATE: _____
RESOLUTION INCORPORATED BY: _____ DATE: _____

Attachment 1

INDIAN POINT UNIT 2

EOP VERIFICATION FORM #3

Verification Completion Date: _____

Performed by: 1. _____

2. _____

3. _____

4. _____

5. _____

All actions required by the verification have been completed and approved.

_____ Date: _____
Generation Support Manager

Attachment 2

INDIAN POINT UNIT 2

EOP VERIFICATION

EVALUATION CRITERIA CHECKLIST

Area

I. PROCEDURE LEVEL EVALUATION

A. Written Correctness

1. Legibility

a. Are the printed borders visible on all procedure pages?

b. Are the text, tables, graphs, figures and charts legible to the evaluator?

2. EOP Format Consistency

a. Do the following sections exist in each EOP:

(1) Cover Sheet

(2) Operator Actions

(3) Foldout Page (if applicable)

b. Is the operator actions section presented in a dual-column format?

c. Is the page layout consistent with the sample page format?

3. Identification Information

a. Does the cover sheet correctly provide the following:

(1) procedure purpose
(2) symptoms or entry conditions
(3) adverse containment conditions (if applicable)

b. Does each page correctly provide the following:

(1) procedure number
(2) procedure title
(3) revision number
(4) Page _____ of _____ numbers

c. Does the procedure have all its pages in the correct order?

Area

Attachment 2

II. STEP, CAUTION, NOTE-SPECIFIC VERIFICATION

A. Written Correctness

1. Information Presentation

a. Are instruction steps numbered correctly?

b. Are instruction steps constructed to comply with the following:

(1) Steps are written in short and precise language.
(2) Operator actions are specifically stated.
(3) Operator actions are adequately stated.
(4) Punctuation and capitalization are proper.
(5) Abbreviations are correct and understandable to the operator.

c. Do instruction steps make proper use of logic structure?

d. When an action instruction is based on receipt of an annunciator alarm, is the setpoint of the alarm identified?

e. Are cautions properly used?

f. Are cautions properly placed?

g. Are cautions worded so that they do not contain operator actions?

h. Are notes properly used?

i. Are notes properly placed?

j. Are notes worded so that they do not contain operator actions?

k. Are numerical values properly written?

l. Are values specified in such a way that mathematical operations are not required of the user?

m. Is a chart or graph provided in the procedure for necessary operator calculations?

n. Are units of measurement in the EOP the same as those used on equipment?

Area

Attachment 2

2. Procedure Transitions

a. Do the referenced procedures identified in the EOPs exist for operator use?

b. Are the transition instructions correctly worded?

(1) "go to" (branching forward or out of an EOP)
(2) "return to" (branching backwards in an EOP)

B. Technical Accuracy

1. Entry Conditions or Symptoms Information

a. Are the entry conditions of the EOP listed correctly?

b. If additional entry conditions have been added, do they comply with the following:

(1) appropriate entry conditions for which the EOP should be used

(2) not excessive

2. Instructional Step, Caution and Note Information

a. Are EOP/ERG differences justified and documented?

b. Is the ERG technical foundation (strategy) changed by the following changes in EOP steps, cautions or notes:

(1) elimination
(2) addition
(3) sequence
(4) alteration

c. Are correct, plant-specific adaptations incorporated per ERG:

(1) systems
(2) instrumentation
(3) limits
(4) controls
(5) indications

Area

3. Quantitative Information

   a. Do the quantitative values, including tolerance bands, used in the EOP comply with applicable EOP source document?

   b. When calculations are required by the EOP, are equations presented with sufficient information for operator use?

4. Plant Hardware Information

   a. Is the following plant hardware specified in the EOP available for operator use:

      (1) equipment
      (2) controls
      (3) indicators
      (4) instrumentation

Attachment 6

EOP Validation Program Results

Consolidated Edison Company of New York, Inc.
Indian Point Unit No. 2
February , 1987

CONSOLIDATED EDISON COMPANY

OF NEW YORK

INDIAN POINT NO. 2

EMERGENCY OPERATING PROCEDURES

VALIDATION PROGRAM

FINAL REPORT

JANUARY 1, 1985

TABLE OF CONTENTS

SECTION	PAGE
1.0 INTRODUCTION	
1.1 Purpose	1
1.2 Scope	2
2.0 RESPONSIBILITIES	
2.1 Westinghouse	3
2.2 Indian Point Two	3
3.0 PREPARATION PHASE	
3.1 Procedure Writing	4
3.2 Validation Methods	4
3.3 Validation Evaluation Criteria	4
3.4 Simulator Capability	6
3.5 Test Week Data Collection	7
3.6 Text Scenarios	7
3.7 Operator Team	7
3.8 Training	9
3.9 Observation Team	10
4.0 ASSESSMENT PHASE	11
5.0 RESOLUTION PHASE	17
6.0 DOCUMENTATION PHASE	21
7.0 RESULTS AND CONCLUSIONS	23
8.0 REFERENCES	26

TABLE OF CONTENTS

SECTION		PAGE
APPENDICES		
A.	Definitions	A-1
B.	Validation Evaluation Criteria	B-1
C.	Validation Forms	C-1
D.	Validation Scenarios	D-1
E.	Validation Training Program Outline	E-1
F.	Summary of Validation Test Deviations and Resolutions	F-1

LIST OF TABLES

NO.	TITLE	PAGE
1	EOP Validation Method	8
2	Behavioral Symptoms Which Flag Possible Performance Deviations	13
3A	Assessment Phase Checklist For The Observation Team Leader	14
3B	Assessment Phase Checklist For The Observation Team Members	15
3C	Assessment Phase Checklist For The Operator Crew Members	16
4A	Resolution Phase Checklist For The Observation Team Leader	18
4B	Resolution Phase Checklist For The Observation Team and Operator Crew Members	20

LIST OF FIGURES

NO.	TITLE	PAGE
1	Emergency Response Capability SYSTEM Interfaces	5

1.0 INTRODUCTION

1.1 Purpose

The Westinghouse Owners Group (WOG) has developed and promulgated the Revision 1 Emergency Response Guidelines (ERGs) for implementation by member utilities. Plant specific emergency operating (EOPs) have been developed from the Low Pressure (LP) ERGs for Indian Point Two. A plant specific validation has been conducted on the Indian Point Two EOPs for the following reasons:

1. Even though the EOPs employ similar structure, format, wording, and technical content as the LP ERGs, differences do exist between the EOPs and generic source document in areas of procedure complexity, step sequence, and plant equipment. The validation was necessary to ensure that the differences between the EOPs and the LP ERGs did not in any way affect the usability of the EOPs for Indian Point Two.

2. The Indian Point Two philosophy of procedure usage and operator interaction may differ from those used during the generic Rev. 1 ERG validation at Seabrook. Any differences may impact the effectiveness of the EOPs and should be validated.

The generic Rev. 1 ERG Validation Program was extensive and covered multiple accident scenarios that had a very low probability of occurrence.

The results of the generic validation conducted at Seabrook, New Hampshire (Oct/Nov 1984), have shown that the ERGs are an effective element in the man/machine SYSTEM. The ERGs facilitate proper management of emergency conditions in the plant. Because the Rev. 1 ERG validation was so extensive and the results so favorable, a less extensive plant specific validation was conducted. The scope of the validation was such that all procedures were validated by at least one validation method.

1.2 Scope

Each EOP was validated based on its effectiveness in providing proper management of emergency plant conditions. The preferred method for the validation was on the Indian Point Two simulator. Many of the EOPs had to be validated with a combination of both the simulator and the walk-through methods. The hybrid method still provided a dynamic environment for the validation despite support personnel interactions with the control boards and the operators. A few of the EOPs did require a walk-through validation on the simulator because of simulator limitations.

2.0 RESPONSIBILITIES

The initial EOP validation and future EOP revision validations are the responsibility of Indian Point Two. However, Westinghouse Electric Corporation has been contracted to perform the initial EOP validation. The EOP revision validation program will be supervised and managed by the operations staff manager from Indian Point Two.

2.1 Westinghouse

Westinghouse was awarded a contract to conduct all phases of the initial EOP validation program.

2.2 Indian Point Two

Indian Point Two provided an operator crew, simulator support personnel, observation team members, plant specific simulator time, and classroom availability for the validation program.

3.0 PREPARATION PHASE

This phase was used to identify the resources needed in validating the EOPs. Proper test methods with accompanying test scenarios were selected and developed respectively so that each EOP would be properly exercised during the testing phase. The test crew was provided with training in the proper use of their EOPs so that any procedure problems would be accurately identified during the test week. Improper procedure usage by the operators (operator error or insufficient training) could have masked actual EOP user problems or prevent an accurate assessment of the EOP's operational correctness.

3.1 Procedure Writing

Westinghouse Electric Corporation has developed plant specific EOPs for Indian Point Two from the LP ERGs. The development process also included an EOP verification program. After the EOPs set was written and final reviews completed, then the EOPs were validated.

3.2 Validation Methods

The Indian Point Two plant specific simulator was used extensively to validate all the EOPs. Many EOPs were validated with scenarios that required both the simulator and walk-through validation methods. No EOP had to be validated with the table-top method.

3.3 Validation Evaluation Criteria

Validation criteria have been developed based on the Emergency Response Capability (ERC) System interfaces as seen in Figure 1. The evaluation criteria is listed in Appendix B. The observation team members, the shift supervisor (operator who actually uses the EOPs) and the STA (individual who monitors the CSF status trees), and the operators each had a knowledge of the evaluation criteria list which was used to evaluate problems in EOP usage.

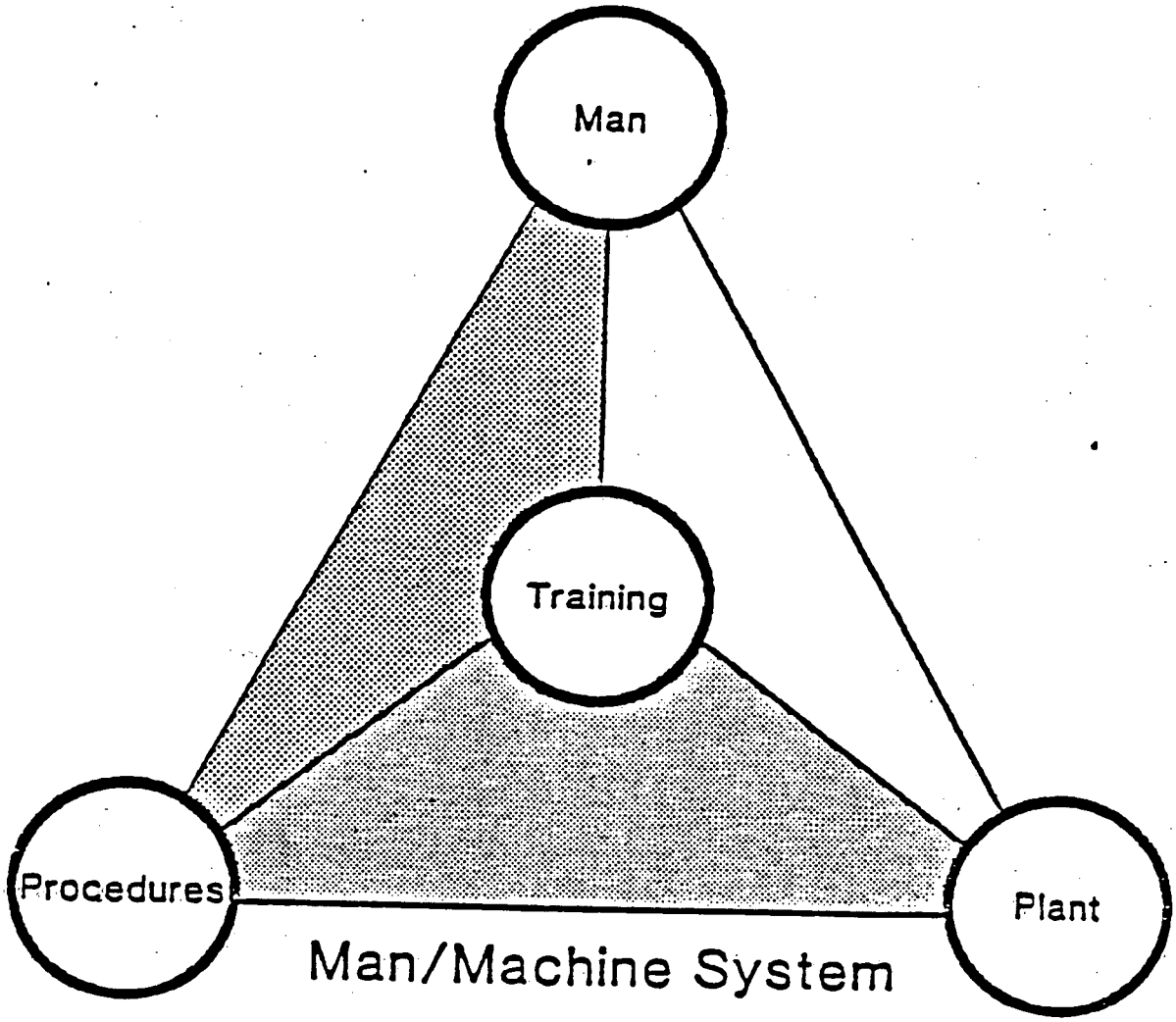

Figure 1. Emergency Response Capability SYSTEM Interfaces

3.4 Simulator Capability

The Indian Point No. 2 simulator is a replica (the control room is presently undergoing an upgrade based on control room design review results) of the Indian Point No. 2 control room. The simulator was supplied by the Link-Simulator Division of Singer Corporation and is located in the Visitors' Center at the Indian Point site. The simulator was designed to train operators in normal operations, abnormal operations, and major accidents based on the Final Safety Analysis Report (FSAR).

Scenarios were developed that could exercise all the EOPs. These scenarios were tested on the simulator with EOP drafts in order to assess if the simulator could produce results realistic enough to validate the EOPs.

The simulator assessment process required four simulator shifts. Two Westinghouse personnel with backgrounds in operations and simulator training conducted the assessment. Two licensed operators from Indian Point No. 2 also assisted in the assessment. Each simulator scenario was set up and run on the simulator with available EOP drafts. The scenarios were modified as necessary to best utilize overall simulator capability while still meeting the intent of the scenario.

The following assessment criteria were used to evaluate the effectiveness of the simulator for each validation scenario:

a. Does the simulator display reasonable plant conditions and trends for the accident(s) and/or equipment failures introduced? For example, does pressurizer level decrease when a LOCA is initiated in an RCS loop?

b. Does the simulator display reasonable plant conditions and trends during any interfacing of man with the machine? For example, do indications of natural circulation flow trend in the proper direction when the steam dump rate is increased?

Each scenario was carefully evaluated based on the above assessment criteria in order to finalize the validation method to be used for each EOP. Table 1 lists each EOP and its intended validation method. Table top validation for any EOP was not necessary.

3.5 Test Week Data Collection

Data collection during the validation test week was very important in the resolution of EOP deficiencies. Data that was collected during the test week consisted of the following items:

1. Transition Flow Chart with the actual operations path as compared to the predicted path

2. Deviation sheets for each scenario

3. Validation evaluation criteria forms filled out for each scenario

4. Audio tapes for each test and debriefing session

5. Any recorder chart paper or recorded data that may be useful in reconstructing the scenario

Appendix C contains various forms to be used for EOP validation.

3.6 Test Scenarios

Scenarios were selected in order to exercise each EOP at least once during the test week. The scenarios for each validation method are listed in Appendix D along with the completed scenario forms.

3.7 Operator Team

The usefulness of the EOPs were validated by the normal control room operator compliment.

TABLE 1

EOP VALIDATION METHOD

Simulator	Walk-Through
E-O	ES-0.2
ES-0.1	ES-0.3
ES-1	ES-0.4
ES-1.1	FR-S.2
ES-1.2	FR-C.1
ES-1.3	FR-C.2
ES-1.4	FR-C.3
E-2	FR-H.2
*E-3	FR-H.4
*ES-3.1	FR-H.5
*ECA-0.0	FR-Z.2
ECA-0.1	FR-I.3
ECA-0.2	
*ECA-1.1	
*ECA-1.2	
*ECA-2.1	
*ECA-3.1	
*ECA-3.2	
*ECA-3.3	
*FR-S.1	
*FR-H.1	
FR-H.3	
FR-P.1	
FR-P.3	
FR-Z.1	
FR-Z.3	
FR-I.1	
FR-I.2	
F-0.1	
*F-0.2	
F-0.3	
F-0.4	
F-0.5	
*F-0.6	

* Instrumentation and/or controls have to be tagged in order for the scenario to be effective on the simulator.

The control room operator compliment consisted of the following personnel:

- o reactor operators (2)
- o shift supervisor (1)
- o shift engineer/STA (1)
- o alternate (1)

The alternate was capable of assuming any of the operator stations in the event that the normal operator was absent.

3.8 Training

A training program to present the validation test program and EOPs to the operating team was developed for Indian Point Two. This program used the established validation criteria to assure that the proper interfaces with the EOPs, control room, and operators was considered. Much of the program structure closely followed the corresponding training program used in the Revision 1 ERG Validation Program at Seabrook. Again, however, the training was compressed into a single week because of personnel and equipment constraints. Therefore, detailed background information concerning EOP steps was not presented unless requested.

The training program basically covered two areas. Obviously, the new set of EOPs was covered as thoroughly as time permits, both in the classroom and on the simulator. Special emphasis was placed on procedure usage, since strict adherence to proper usage was "requested" of the operators during the validation test. However, equally important to the success of the program was a validation overview that introduced the operators to all aspects of the validation test program. For this reason, the training program covered such things as the observation team's responsibilities, transition flow chart usage, and especially the training debriefing process. The operators were trained on scenarios similar to the actual test week scenarios so that they will familiar with the types of test week transients.

The operators were also exposed to the full list of validation evaluation criteria to be used by the observers/evaluators and themselves during the test

week. The evaluation criteria was reviewed throughout the training week in order to prepare the operator crew for the test week. The debriefing sessions were more meaningful because the operators understood the EOP validation evaluation criteria.

Most importantly, the operators were reminded that their personal abilities would not be judged, but that they would be performing a valuable service in the overall program implementation. During the training week, each operator had a complete copy of the EOPs for familiarization purposes. These EOPs were the same ones used during the test, so that continuity was maintained. During the training week any operator's comments concerning the EOPs was included in the test week data.

The five day course was set up with three daily phases as outlined in Appendix E. Phase I consisted of classroom presentations on procedures with emphasis on high level action summaries and transition flow charts. Phase II consisted of "walk-throughs" on the simulator to allow the operators to become familiar with the control board/procedure interface. Phase III consisted of extensive accident scenarios run on the simulator (based on simulator capability). Upon conclusion of the five day course, the operators understood how to properly use the EOPs during major plant accidents and were ready to perform the actual validation test.

3.9 Observation Team

Each validation test scenario being performed on the simulator control room was observed by a specially selected and trained observation team. This team was responsible for documenting any deviation from nominal (expected) performance observed during each scenario. This team consisted of the following personnel:

- One member familiar with EOP/ERG development and the training program developed for this test.

- One or more members familiar with EOP/ERG development and background documentation.

- One member with knowledge of EOP/ERG development and human engineering skills.

- One or more members from the Indian Point Two staff familiar with the control room and the operators.

Each individual on the observation team was instructed on the duties of an observer. Special checklists stating the validation evaluation criteria was provided to each team member as a reminder of the expected nominal performance of the EOPs. Team members were briefed on the use of the transition flow charts for each test scenario.

It was the observation team's responsibility to record all observed deviations (real or suspected, positive or negative), discuss them subsequently with the operators during the debriefing session, make an initial evaluation of the cause, and with the operators input, suggest possible resolutions. The complete debriefing session was tape recorded for the resolution phase.

4.0 ASSESSMENT PHASE

During the assessment phase, performance observations which may potentially be deviations (actual versus expected responses) were recorded by observation team members on Form IPV-4 as each validation method or combination of validation methods was performed. The performance observations were then used to identify potential problems with the EOPs. The assessment phase only identified potential deviations but did not classify them. Classification of the deviations occurred during resolution.

Assessment for the walk-through, and simulator methods was the detection plus documentation of performance deviations. During this assessment, the observer/reviewers were able to detect and record the occurrence of performance deviations by observing or discussing plant responses and operator actions. Table 2 contains a list of behavioral

symptoms that were used to aid in this detection by the observers. Failure or success in achieving expected plant parameter response determined the technical adequacy of the EOP instructions.

Certain actions were necessary in the performance of the assessment phase based on the validation method used. These actions are outlined in Tables 3A through 3C. The observation team leader had the responsibility of ensuring that all team actions were properly performed. Table 3A was used by the team leader as a checklist to ensure that each scenario was ready to be tested. The other checklists in Tables 3B and 3C prepared the team and crew for their responsibilities. Although the EOPs were validated without using the table-top validation method, Tables 3A, 3B and 3C retain checklist review for table-top for possible future use.

Before starting the assessment phase, the test crew and observation crew members were briefed on the following responsibilities:

- objectives of the assessment
- procedures for conducting the assessment
- the responsibilities of each team member (observation and test)

The observation team members were introduced to the operators. Their individual responsibilities during the assessment were also explained. The use of observation and debriefing forms were reviewed with the operators. The briefing acquainted the operators with the observers and familiarized the operators with the overall purpose and technique of the assessment. It was re-emphasized to the operators that the assessment was of the EOPs and not the operators. Although their actions and responses were important to the validation program, the operators themselves were not being critiqued.

TABLE 2

BEHAVIORAL SYMPTOMS WHICH FLAG POSSIBLE PERFORMANCE DEVIATIONS

OPERATOR COMMISSION DEVIATION INDICATORS

- does not walk to anticipated area of control room
- does not look at anticipated display
- does not touch anticipated control
- does not set control to anticipated value
- performs an action not in the procedure
- does not select proper procedures
- selects too many procedures
- has difficulty determining values from charts, graphs, tables, etc.

OPERATOR OMISSION DEVIATION INDICATORS

- does not perform an action or step
- allows a limit to be exceeded
- fails to detect symptom(s)
- fails to perform task within specified time (when required)

SEQUENCE TYPE ERROR INDICATOR

- performs action out of sequence

UNCERTAINTY INDICATORS

- has to interpolate from charts, graphs, etc.
- has to re-read procedures
- takes excessive time to read procedures
- takes excessive time to complete action
- cannot remember what to do once procedures have been read
- does not use procedures (when procedures are available is tentative or confused)
- cannot find key information in procedures

TABLE 3A

ASSESSMENT PHASE CHECKLIST FOR THE

OBSERVATION TEAM LEADER

Applicable to: T-T	W-T	S	Checklist
X	X	X	1. Select applicable scenario run sheet
X	X	O	2. Distribute copies of run sheet to observation team members
O	O	X	3. Provide a scenario run sheet to the simulator instructor
O	O	X	4. Brief the observation team members on the scenario
O	O	X	5. Have simulator instructor implement the simulator check list
X	X	X	6. Ensure all communications systems, data recorders, and audio/video systems are operable and ready for the scenario run
X	X	O	7. Brief the operator team on the initial conditions of the plant including any evolutions in progress
X	X	X	8. Distribute validation evaluation criteria forms to the observation team and the test team
X	X	X	9. Commence the run after the observation team and the test team are ready
X	X	O	10. Direct the path of the scenario by providing the test team with pertinent information at the proper time
X	X	X	11. Conclude the scenario run after all observation team members feel the intent of the run has been met

TABLE 3B
ASSESSMENT PHASE CHECKLIST FOR
OBSERVATION TEAM MEMBERS

Applicable to: T-T	W-T	S	Checklist
X	X	O	1. Obtain a copy of the scenario run sheet from the observation team leader
X	X	X	2. Obtain validation evaluation criteria forms to reference during the run
X	X	X	3. Inform the observation team leader when you are ready to commence the run
X	X	X	4. Note any problems or discrepancies encountered by the operators during the use of the EOPs

TABLE 3C
ASSESSMENT PHASE CHECKLIST FOR
OPERATOR CREW MEMBERS

Applicable to: T-T	W-T	S	Checklist
X	X	X	1. Obtain a brief on plant conditions and evolutions in progress
X	X	X	2. Obtain a copy of the validation evaluation criteria form and know its contents
X	X	X	3. Use the procedures as you have been taught during the training week
X	X	O	4. Walk and/or talk through the EOP actions to be taken during specific scenario runs
X	X	O	5. Identify controls used to carry out actions, expected system response(s), how response(s) are verified, and action(s) to be taken if response(s) do not occur

5.0 RESOLUTION PHASE

In resolution, the deviations identified during assessment on Form IPV-4 were evaluated with the results being contained in Appendix F. Many deviations did not require any resolution but merely were observations. Deviations that were determined to require resolution were evaluated for their apparent cause with relationship to the personnel, training, plant design, or EOP. Possible solutions were then determined for each deviation. For example, if the operating crew felt that the EOPs were not detailed enough, possible solutions might be either to increase the level of detail in the EOP or to increase the training emphasis on the indicated steps with a follow-up evaluation to ensure that the operator does not need additional procedure detail. A resolution would be chosen from these two possible solutions.

For the walk-through and simulator methods an operator debriefing session were conducted for resolutions immediately after the running of each scenario during the assessment. In this way, the events of the scenario were fresh in the operators' and observers' minds. The debriefing/resolution session was recorded by tape recorder.

The debriefing session was designed to identify and resolve all possible EOP deviations. Tables 4A and 4B provided checklists that were used during the debriefing session. These checklists are applicable to all three validation methods.

TABLE 4A

RESOLUTION PHASE CHECKLIST FOR THE

OBSERVATION TEAM LEADER

Checklist

1. Assemble the observation team and operator crew for the debriefing session

2. Brief the participants on the purpose and objectives for debriefing

3. Review the scenario with the observation team and operator crew

4. Explain any differences from the expected paths on the transition flow charts

5. Solicit comments from the operator crew based on the validation evaluation criteria.

   - identify deviations
   - resolve deviations based on the source of the problems

6. Solicit observation team comments based on the validation evaluation criteria

   - identify deviations
   - resolve deviations based on the source of the problems

7. Solicit any other comments that may affect the usability of the EOPs

   - identify deviations
   - resolve deviations based on the source of the problems

8. Record all pertinent deviations with resolutions on the validation evaluation criteria work sheet

TABLE 4A (cont)

RESOLUTION PHASE CHECKLIST FOR THE

OBSERVATION TEAM LEADER

Checklist

9. Collect the following information at the conclusion of the debriefing session for the documentation phase

   - all written comments, observations, deviations, etc., from the observation team and operator crew
   - validation evaluation criteria form
   - scenario run sheet
   - transition flow charts
   - plant parameter data
   - audio/video tapes

10. Summarize the findings of the debriefing

TABLE 4B

RESOLUTION PHASE CHECKLIST FOR THE

OBSERVATION TEAM AND OPERATOR CREW MEMBERS

Checklist

1. Provide input in identifying and resolving any EOP deviations

2. Provide the observation team leaders with all your notes that pertain to the run at the conclusion of the debriefing session (please record your name on each sheet in case any questions arise during the documentation phase).

6.0 DOCUMENTATION PHASE

In order to provide an accurate and traceable record of the validation phase, the documentation contained in this report and its Appendicies is retained on file and used as a guide for all future EOP validations. The Validation Procedure for EOP Revisions (GSAD-6) provides guidance for the planning and the implementation of any future EOP validations.

7.0 RESULTS AND CONCLUSIONS

7.1 Results of Validation

The two week validation program proved to be very productive for the following reasons:

- o all EOPs were validated
- o no major deviations were noted during the validation
- o training personnel and operations personnel received initial training on their new EOPs plus valuable operational experience on their plant specific simulator
- o the operator crew provided outstanding input on the EOPs
  - several deviations observed by the operators are applicable to the generic ERGs
  - their extensive operating experience helped them to evaluate the EOPs with objectivity
- o simulator capability assessed
  - exhibited much more stability than expected based on the complexity of many of the scenarios
  - required extensive interface among the instructor, the operators, and the simulator in order to make many of the scenarios work (hanging "equipment inoperable" tags, providing information to the operators based on erroneous or unavailable information, entering simulator malfunctions, etc.)

- many improvements were made after the capability of the simulator was initially assessed in September 1984 (natural circulation adequately modeled, one-line fix for SGTR reverse heat transfer modeled, etc.)

- despite the many improvements to the simulator capability, it still contains some limitations which are known and being addressed as part of the simulator upgrade.

* unable to simulate two phase flow in RCS

* PRZR bubble is too soft and its volume appears to be too small

* instructor console is not user friendly

* insufficient malfunctions modeled

* important control board instrumentation inoperable (RVLIS, CRTs, etc.)

7.2 Conclusions

The extensive EOP development program for Indian Point No. 2 resulted in a set of procedures with few problems. During the test week 119 deviations were recorded on Form IPV-4 which are reformated and summarized in Appendix F. None of the deviations challenged the technical accuracy of the EOPs. A few of the deviations had generic implications and were submitted to the WOG Maintenance Program for further evaluation. Most of the deviations resulted in minor changes to the EOPs, but will improve the EOP's usefulness to the operators. Another benefit of the validation pertains to training. Training personnel received valuable experience in the use of the EOPs. This experience should be very useful for future training and retraining of plant operators. Also, the trainers received first-hand experience concerning the plant specific simulator capabilities.

The validation process has demonstrated the usefulness of the EOPs for response to emergency plant conditions. The generic validation of the ERGs at the Seabrook simulator provided data that supports the technical accuracy of the guidelines. The plant specific validation confirmed the operational correctness of the Indian Point No. 2 EOPs and further demonstrated the usability of each procedure.

8.0 REFERENCES

1. Summary Report - Emergency Response Guidelines Validation Program, WCAP-10204, September, 1982.

2. Emergency Operating Procedure Validation Guidelines, INPO 83-006, July, 1983.

3. Component Verification and System Validation Guideline, INPO 83.047, December, 1983 (NUTAC).

4. Emergency Operating Procedures Verification Guideline, INPO 83-004, March, 1983.

5. Westinghouse Owners Group Emergency Response Guidelines - Revision 1, September 1, 1983.

6. Final Report - Emergency Response Guidelines Validation Program, WCAP 10599, June 1984.

APPENDIX A

DEFINITIONS

APPENDIX A
DEFINITIONS

Control Room Simulator - Dynamic device which imitate functions of control room hardware in real, fast, or slowed time.

Deviations - All observations made by observation team members or operator crew members that may or may not require some EOP related resolution.

Emergency Operating Procedures (EOPs) - Plant procedures which provide operator actions necessary in mitigating the consequences of transients and accidents that cause plant parameters to exceed reactor protection setpoints, engineered safety feature setpoints, or other appropriate technical limits.

Emergency Operating Procedure Guidelines (EPGs) - Guidelines that provide technical bases for the development of EOPs.

EOP Validation - The evaluation performed to determine that the actions specified in the EOP can be followed by trained operators in the management of emergency plant conditions.

Emergency Response Guidelines (ERG) - A complex and detailed network of generic emergency guidance for W plants.

Function Restoration Guideline (FRG) - Those sets of operator action steps which are specifically intended to respond to a Critical Safety Function challenge as determined by plant symptoms.

Operator-Plant-Procedure-Training System (System) - To address Emergency Response Capabilities (ERC) the system elements used to mitigate the consequences of an emergency condition are as follows:

- "operator" consists of the control room operating crew.
- "plant" consists of the plant as seen from its control room with its instruments and controls. It may either include or not include a Safety Parameter Display System (SPDS).

- o "procedure" consists of the EOP set and supporting system operating procedures (EOP Network).
- o "training" consists of the EOP training program.

Mock-Up - Static device (e.g., 3-D photos, 2-D photos, drawings) which portrays control room hardware and configuration.

Observation Team - Multidisciplinary team with knowledge of EOP development, usage, and human engineering.

Operator Crew - Team of trained operators consisting of the normal control room compliment plus an alternate. This team has received the one week validation training or a normal EOP training program or an EOP retraining program before the validation test.

Optimal Recovery Guideline (ORG) - Those sets of operator action steps in the ERG network which respond to a specific, diagnosed event. Guidance is provided to recover the plant from the event in the most efficient manner.

Paced Simulator Performance - Method of validation whereby actions are carried out by control room operating personnel in response to cues from simulated equipment in real, fast, or slowed time.

Plant Functions - Performance requirements and objectives of the plant design, such as core cooling, reactivity control, inventory control and electricity generation.

Real Equipment - On-line, functional hardware contained in a nuclear power plant control room.

Real Performance - Method of validation whereby actions are carried out by control room operating personnel in response to cues from functional on-line equipment in real time.

Reference Validation - Method of validation whereby data developed in a common EOP validation program is referenced by similar plants.

(Critical) Safety Functions - A limited set of plant functions which, if maintained, will prevent core damage and/or radioactivity release to the environment. An activity which assures the integrity of the physical barriers against radiation release.

Simulator Validation - Method of validation whereby control room operators perform actual control functions on simulated equipment based on a specific scenario. The observation team observes all actions and records possible deviations.

Source Documents - Documents or records upon which the System components are based.

Status Tree - Graphical device to quickly evaluate the condition of a Critical Safety Function. Identifies off-normal conditions and the appropriate FRG for restoration of the function.

Symptoms - Displayed plant characteristics which directly or indirectly indicate plant status.

System Operational Correctness - A characteristic of the System which indicates the degree to which the components are compatible.

System Validation - The overall System (operator, control room, EOPs and training) evaluation performed to determine that the system components work together to accomplish the desired results.

Table-Top - Method of validation whereby an operating crew explains or discusses their step-by-step actions during a proposed event scenario to an observation team.

Verification - The evaluation performed to ensure consistency between any System element and its appropriate source documents.

Walk-Through - Method of validation whereby an operating crew conducts a step-by-step enhancement of their actions during a proposed event scenario without carrying out the actual control functions.

Westinghouse Owners Group (WOG) - Organization of utilities which own nuclear power plants with Westinghouse-supplied Nuclear Steam Supply Systems. Activities involve generic engineering, licensing, and operational issues relating to Westinghouse-designed nuclear units.

Writers Guide for EOPs - A plant document that provides instructions for writing EOPs, emphasizing the incorporation of good writing principles.

APPENDIX B

VALIDATION EVALUATION CRITERIA

VALIDATION EVALUATION CRITERIA

1.0 SCOPE

In order to accurately assess the effectiveness of the EOPs during simulated accident conditions, specific criteria have been developed. The EOP evaluation criteria is broken down into the following two major areas:

- o usability
  - level of detail
  - understandability
- o operational correctness
  - plant compatibility
  - operator compatibility

The questions in each area were assembled from the evaluation of the ERC interfaces.

The success of the validation is contingent upon input from both the observation team and the operator crew. Without comprehensive input from both teams, the results of the validation may not be all inclusive. Input from the team and crew is broken down into the following three basic parts:

- o observation team member input
- o shift supervisor (SS and STA input)
- o input from operators other than the SS and STA

Therefore, this appendix contains the evaluation criteria sheets to be used by each input group. The observation team members should use the evaluation criteria as a detailed guide for recording any possible procedure problems. The operator crew should be very familiar with the evaluation criteria in order to provide more comprehensive input during the debriefings. During the debriefing sessions the three input groups can each provide their comments based on their experiences or observations.

Some of the criteria may not be applicable for each validation method. Any criterion which is not applicable (N/A) for one or more of the validation methods will contain the following information in parentheses at the conclusion of the step: (N/A specific method or methods) Example: (N/A T-T and W-T). Although table-top validation for the EOPs was not necessary, it is retained here for possible future use.

Validation Methods

T-T: table-top

W-T: walk-through

S: simulator

2.0 EVALUATION CRITERIA

Observation Team Members:

_____ _____

_____ _____

_____ _____

Shift Supervisor/STA:

_____ _____

Control Room Operators:

_____ _____

Alternate: _____

Date: _____ EOP(s): _____ Rev.: _____

I. USABILITY

A. Level of Detail

1. Is sufficient information provided in order to perform the specified actions for each step?

EOP	Step No.	Explanation

2. Are the actions explicit or adequately described at each decision point (use of "OR")?

EOP	Step No.	Explanation

3. Are the labeling, abbreviations, and location information that is provided in the EOP sufficient to assist the operator in finding needed equipment?

EOP	Step No.	Explanation

4. Is the EOP missing information needed to manage the emergency condition?

EOP	Explanation

5. Are the contingency actions sufficient to address the observed symptoms?

EOP	Step No.	Explanation

6. Are the titles and numbers sufficiently descriptive to enable the operator to find referenced and branched procedures?

EOP	Step No.	Explanation

B. Understandability

1. Is the EOP easy to read?

EOP	Step No.	Explanation

2. Are the figures and tables easy to read with sufficient accuracy?

EOP	Figure/Table No.	Explanation

3. Can the values on figures and charts be easily determined?

EOP	Figure/Chart No.	Explanation

4. Are caution and note statements readily understandable and complied with?

EOP	Step No.	Explanation

5. Are the EOP steps readily understandable and complied with?

EOP	Step No.	Explanation

6. Is the organization of the EOPs understood?

_____

_____

_____

II. OPERATIONAL CORRECTNESS

A. Plant Compatibility

1. Can the actions specified in the procedure be performed in the designated sequence? (N/A T-T)

EOP	Step No.	Explanation

2. Are there alternate success paths that are not included in the EOPs?

EOP	Step No.	Explanation

3. Can the information from the plant instrumentation be easily obtained, as specified by the EOP? (N/A T-T)

EOP	Step No.	Explanation

4. Are adequate plant symptoms that enable the operator to transition to the applicable EOP provided in the EOP? (N/A T-T and W-T)

EOP	Step No.	Explanation

5. Are the EOP entry conditions appropriate for the plant symptoms displayed to the operator? (N/A T-T and W-T)

EOP	Step No.	Explanation

6. Is information or equipment not specified in the EOP required to accomplish the task? (N/A T-T)

EOP	Step No.	Explanation

7. Do the plant responses agree with the EOP basis? (N/A T-T and W-T)

EOP	Step No.	Explanation

8. Are the instrument readings and tolerances stated in the EOP consistent with the instrument values displayed on the instruments? (N/A T-T)

EOP	Step No.	Explanation

9. Is the EOP physically compatible with the work situation (too bulky to hold, binding would not allow them to lay flat in the work space, insufficient area to allow use of EOPs)? (N/A T-T)

Explanation

_____

_____

_____

10. Are the instrument readings and tolerances specified by the EOP for remotely located instruments accurate? (N/A T-T and S)

EOP	Step No.	Explanation

11. Could the CSF Status Trees by properly monitored? (N/A T-T)

Tree	Explanation

B. Operator Compatibility

1. If time intervals are specified, can the procedure action steps be performed on the plant within or at the designated time intervals? (N/A T-T)

EOP	Step No.	Explanation

2. Can the procedure action steps be performed by the operating shift? (N/A T-T)

EOP	Step No.	Explanation

3. If specific actions are assigned to individual shift personnel, does the EOP adequately aid in the coordination of actions among shift personnel where necessary? (N/A T-T)

EOP	Step No.	Explanation

4. Can the operating shift follow the designated action step sequences? (N/A T-T)

EOP	Step No.	Explanation

5. Can the particular steps or sets of steps be readily located when required? (N/A T-T)

EOP	Step No.	Explanation

6. Can the EOP exit point be returned to without omitting steps when required? (N/A T-T)

EOP	Step No.	Explanation

7. Can procedure branches be entered at the correct point?

EOP	Step No.	Explanation

8. Are EOP exit points specified adequately?

EOP	Step No.	Explanation

9. Could the foldout page be accessed and used properly?

Explanation

10. Were CSF Status Trees properly monitored and used to control function restoration procedure implementation? (N/A T-T)

Tree	Explanation

11. Were the operators able to distinguish the EOPs from other control room procedures? (N/A T-T)

Explanation

_____

_____

_____

APPENDIX C
VALIDATION FORMS

INDIAN POINT TWO

EOP VALIDATION FORM

Page __ of __

EOP Title: _____

EOP Number: _____ Revision: _____

Scope of Validation: _____

_____

Validation Method or Methods to be Used: _____

_____

Designated Observation Team Members:

_____

_____

_____

Preparation Completed on _____ By: _____

Assessment Completed on _____ By: _____

Operator Team Members: Qualification: (SRO, RO, Other)

_____ _____

_____ _____

_____ _____

_____ _____

_____ _____

_____ _____

Resolution Completed on _____ By: _____

Documentation Package Forwarded on _____ By: _____

(FORM IPV-1)

INDIAN POINT TWO

TABLE-TOP/WALK-THROUGH SCENARIO FORM

Page __ of __

EOP NUMBER: _____

TITLE: _____

DATE: _____

PURPOSE: _____

_____

SCENARIO DESCRIPTION: _____

_____

_____

_____

_____

INITIAL PLANT CONDITIONS: _____

_____

_____

PROCEDURE STEP DESCRIPTION	PLANT PARAMETER/ SYMPTOM TO CAUSE TRANSITION	TRANSITION TO (PROCEDURE, STEP)

(FORM IPV-2)

INDIAN POINT TWO

TABLE-TOP/WALK-THROUGH SCENARIO FORM (Cont)

Page __ of __

PROCEDURE STEP DESCRIPTION	PLANT PARAMETER/ SYMPTOM TO CAUSE TRANSITION	TRANSITION TO (PROCEDURE, STEP)

(FORM IPV-2A)

INDIAN POINT TWO

SIMULATOR SCENARIO FORM

Page __ of __

SCENARIO NO.:

PROCEDURE NO.: _____ REVISION: _____

TITLE: _____

DATE: _____ IC NO: _____

PURPOSE: _____

SCENARIO DESCRIPTION: _____

INITIAL PLANT CONDITIONS: _____

SIMULATOR SEQUENCE OF MALFUNCTIONS:

DESCRIPTION	NO.	OPTIONS

SPECIAL INSTRUCTIONS:

(FORM IPV-3)

INDIAN POINT TWO

SIMULATOR SCENARIO FORM (Cont)

Page __ of __

SPECIAL INSTRUCTIONS:

(FORM IPV-3A)

INDIAN POINT TWO

DEVIATION SHEET NUMBER: _____

Page __ of __

EOP: _____ REV.: _____ STEP NUMBER: _____

DEVIATION:

_____

_____

_____

_____

_____

_____

EVALUATOR: _____ DATE: _____

RESOLUTION:

_____

_____

_____

_____

_____

_____

SUPERVISOR: _____ DATE: _____

APPROVED: YES NO (circle one)

OPERATIONS SUPERVISOR: _____ DATE: _____

RESOLUTION INCORPORATED BY: _____ DATE: _____

(FORM IPV-4)

APPENDIX D

VALIDATION SCENARIOS

TABLE OF CONTENTS

SECTION	PAGE
TABLE OF CONTENTS	D-2
INTRODUCTION	D-3

SCENARIO NO.	TITLE	PAGE
S-1	Reactor Trip	D-4
S-2	Response to Nuclear Power Generation/ATWS	D-5
S-3	Loss of Secondary Heat Sink	D-7
S-4	Faulted S/G Isolation	D-9
S-5	Uncontrolled Depressurization of All S/Gs	D-10
S-6	Steam Generator Tube Rupture (SGTR)	D-12
S-6A	SGTR With Loss of Reactor Coolant	D-14
S-6A (1)	SGTR With Loss of Reactor Coolant - Saturated Recovery Desired	D-16
S-6B	SGTR Without PRZR Pressure Control	D-18
S-7	Loss of Reactor Coolant (LOCA)	D-20
S-7A	Loss of Emergency Coolant Recirculation	D-22
S-8	Post LOCA Cooldown and Depressurization	D-23
S-9	Inadvertent SI	D-24
S-10	LOCA Outside Containment	D-25
S-11	Loss of All AC Power Recovery Without SI Required	D-27
S-11A	Loss of All AC Power Recovery With SI Required	D-29
S-12	Natural Circulation Cooldown	D-30
S-12A	Natural Circulation Cooldown With Steam Void	D-32
WT-1	Natural Circulation Cooldown	D-34
WT-2	Natural Circulation Cooldown With Steam Void in Vessel	D-35
WT-3	Response to Loss of Core Shutdown	D-36
WT-4	Inadequate Core Cooling	D-37
WT-5	S/G Overpressure	D-38
WT-6	Containment Flooding	D-39
WT-7	Voids in Reactor Vessel	D-40
P-1	Steam Break and SGTR	D-41

INTRODUCTION

The validation test scenarios were developed to exercise all the EOPs to the fullest extent possible while maintaining some semblance of a realistic control room environment. Each scenario contained all the information needed to run the scenario with the exception of walk-throughs. Besides the walk-through scenario form, anotated EOPs and support data were used by support personnel to provide specific information to the operators.

Many scenario had to be modified during the training and test weeks and the changes are listed below:

1. Reactor Trip (S-1) was combined with the Natural Circulation Cooldown scenario (S-12).

2. Since the modeling for natural circulation was upgraded before the validation program commenced, the Natural Circulation cooldown was upgraded from walk-through to simulator (WT-I to S-12).

3. Faulted S/G Isolation (S-4) was added to Loss of Reactor Coolant (S-7).

4. Inadequate Core Cooling (WT-4) was added to Loss of Emergency Coolant Recirculation (S-7A).

5. A practice scenario (P-1) provided the operators with some valuable experience concerning test week implementation procedures.

INDIAN POINT TWO

SIMULATOR SCENARIO FORM

SCENARIO NO.: S-1

PROCEDURE NO.: E-0, ES-0.1 REVISION: 0

TITLE: Reactor Trip

DATE: December 17-21, 1984 IC NO: 11

PURPOSE: 1) E-0 and ES-0.1 are usable by the control room operators; 2) proper transition to ES-0.1 occurs after Rx trip; 3) the plant is controlled and stabilized by using ES-0.1.

SCENARIO DESCRIPTION: A reactor trip occurs on low S/G level following the trip of both MBFPs.

INITIAL PLANT CONDITIONS: 100% power, equilibrium conditions, EOL, all equipment is operable.

SIMULATOR SEQUENCE OF MALFUNCTIONS:

DESCRIPTION	NO.	OPTIONS
Loss of Both MBFPs (loss of turbine lube oil)	65	N/A

SPECIAL INSTRUCTIONS:

1) Allow the operators sufficient time to become familiar with plant conditions before initiating any events.
2) Initiate malfunction 65.
3) Terminate the scenario upon receipt of signal from the validation coordinator.

INDIAN POINT TWO

SIMULATOR SCENARIO FORM

SCENARIO NO.: S-2

PROCEDURE NO.: E-0, FR-S.1 REVISION: 0

TITLE: Response To Nuclear Power Generation/ATWS

DATE: December 17-21, 1984 IC NO: 11

PURPOSE: 1) E-0 and FR-S.1 are usable by the control room operators; 2) proper transition from E-0 to FR-S.1 after noting that rods are not inserted when Rx trip is required; 3) FR-S.1 provides a means to shutdown an observed critical core.

SCENARIO DESCRIPTION: An ATWS occurs after a low S/G level trip signal fails to cause a reactor trip.

INITIAL PLANT CONDITIONS: 100% power, equilibrium conditions, EOL, all equipment is operable.

SIMULATOR SEQUENCE OF MALFUNCTIONS:

DESCRIPTION	NO.	OPTIONS
Failure of Auto Trips	55	N/A
Failure of Manual Trip	56	N/A
Loss of both MBFPs	65	N/A

SPECIAL INSTRUCTIONS:

1) Insert malfunctions 55 and 56 at the beginning of the scenario.
2) Allow the operators sufficient time to become familiar with plant conditions before initiating malfunction 65.
3) Initiate malfunction 65.

(FORM IPV-3)

INDIAN POINT TWO

SIMULATOR SCENARIO FORM (Cont)

SPECIAL INSTRUCTIONS:

4) Hang tags on power sources (breakers 2A and 6A for 480 V busses) to control rod MG sets (prevent operators from securing power to MG sets). These tags should be hung immediately after the Rx trip signal is received.
5) Terminate the scenario upon receipt of signal from the validation coordinator.

(FORM IPV-3A)

INDIAN POINT TWO

SIMULATOR SCENARIO FORM

SCENARIO NO.: S-3

PROCEDURE NO.: E-0, FR-H.1 REVISION: 0

TITLE: Loss Of Secondary Heat Sink

DATE: December 17-21, 1984 IC NO: 11

PURPOSE: 1) E-0 and FR-H.1 are usable by the control room operators; 2) proper transition to FR-H.1 occurs because of inadequate S/G feed; 3) FR-H.1 adequately responds to a loss of secondary heat sink in all S/GS.

SCENARIO DESCRIPTION: After the Rx trip on low S/G level, all feedwater systems are found to be inoperable.

INITIAL PLANT CONDITIONS: 100% power, equilibrium conditions, EOL, all plant systems are functioning properly.

SIMULATOR SEQUENCE OF MALFUNCTIONS:

DESCRIPTION	NO.	OPTIONS
Loss of both MBFPs	65	N/A

SPECIAL INSTRUCTIONS:

1) Allow the operators sufficient time to become familiar with plant conditions before initiating any events.
2) Initiate malfunction 65.

(FORM IPV-3)

INDIAN POINT TWO

SIMULATOR SCENARIO FORM (Cont)

SPECIAL INSTRUCTIONS:

3) After the reactor trips on low S/G level or is manually tripped then secure all auxiliary feed pumps. Hang tags on the pumps to prevent operator use.
4) After step 4 is complete then secure and hang tags on all condensate pumps.
5) After bleed and feed is established (step 14 completed), then provide aux feedwater pumps for feeding the SGs.
6) Terminate the scenario upon receipt of signal from the validation coordinator.

(FORM IPV-3A)

INDIAN POINT TWO

SIMULATOR SCENARIO FORM

SCENARIO NO.: S-4

PROCEDURE NO.: E-0, E-2 REVISION: 0

TITLE: Faulted S/G Isolation

DATE: December 17-21, 1984 IC NO: 11

PURPOSE: 1) E-0 and E-2 are usable by the control room operators; 2) Proper transition to E-2 occurs; 3) all faulted S/Gs are identified and isolated with E-2.

SCENARIO DESCRIPTION: An unisolable feedwater break occurs.

INITIAL PLANT CONDITIONS: 100% power, equilibrium conditions, EOL, all equipment is operable.

SIMULATOR SEQUENCE OF MALFUNCTIONS:

DESCRIPTION	NO.	OPTIONS
Feedwater Break Outside Ctmt	161A	25% of max break

SPECIAL INSTRUCTIONS:

1) Allow the operators sufficient time to become familiar with plant conditions before initiating any event.
2) Initiate malfunction 161A
3) Terminate the scenario upon receipt of signal from the validation coordinator.

Note: If FR-H.5 was not previously done, then it should be done if a yellow condition arises.

(FORM IPV-3)

INDIAN POINT TWO

SIMULATOR SCENARIO FORM

SCENARIO NO.: S-5

PROCEDURE NO.: E-0, E-2, ECA-2.1, FR-P.1, FR-P.2, FR-I.1 REVISION: 0

TITLE: Uncontrolled Depressurization Of All S/Gs

DATE: December 17-21, 1984 IC NO: 11

PURPOSE: 1) E-0, E-2, ECA-2.1, FR-P.1, FR-P.2, and FR-I.1 are usable by the control room operators; 2) Proper transitions from E-0 to E-2 to ECA-2.1; 3) actions are provided in ECA-2.1 for loss of secondary coolant affecting all S/Gs.

SCENARIO DESCRIPTION: The plant is operating at 100% power when the external electrical load drops to zero instantaneously. All S/G safeties stick open.

INITIAL PLANT CONDITIONS: 100% power, equilibrium conditions, EOL, all equipment functioning.

SIMULATOR SEQUENCE OF MALFUNCTIONS:

DESCRIPTION	NO.	OPTIONS
Failed Steam Dump Indication	21C	N/A
Failed Steam Dump 5% open	22A	N/A
Failed Steam Dump 30% open	23A	N/A
Loss of External Electrical Load	26	N/A

SPECIAL INSTRUCTIONS:

1) Allow the operators sufficient time to become familiar with plant conditions before initiating any events.

(FORM IPV-3)

INDIAN POINT TWO

SIMULATOR SCENARIO FORM (Cont)

SPECIAL INSTRUCTIONS:

2) Initiate malfunction 26 then initiate 22A one minute after Rx trip.
3) Initiate 23A 2 minutes after Rx trip.
4) After turbine loading drops to zero then manually open all S/G PORVs. Hang tags on all S/G PORVs to prevent closure of the valves by the operators.
5) Terminate the scenario upon receipt of signal from the validation coordinator.

NOTE - The plant appears to go solid relatively fast. After the plant goes solid, it is very difficult to restore a bubble in the PZR. These problems appear to be model related.

(FORM IPV-3A)

INDIAN POINT TWO

SIMULATOR SCENARIO FORM

SCENARIO NO.: S-6

PROCEDURE NO.: E-0, E-3, ES-3.1, ES-3.2, ES-3.3, FR-I.2, FR-H.3 REVISION: 0

TITLE: Steam Generator Tube Rupture (SGTR)

DATE: December 17-21, 1984 IC NO: 11

PURPOSE: 1) E-0, E-3, ES-3.1, ES-3.2, ES-3.3, FR-I.2, and FR-H.5 are usable by the control room operators; 2) Proper transitions from E-0 to E-3 to ES-3.1 occurs; 3) terminate RCS leakage in E-3 and cooldown to cold shutdown using backing method in ES-3.1.

SCENARIO DESCRIPTION: A large SGTR occurs because of mechanical erosion of one tube.

INITIAL PLANT CONDITIONS: 100% power, equilibrium conditions, EOL, all equipment is operable.

SIMULATOR SEQUENCE OF MALFUNCTIONS:

DESCRIPTION	NO.	OPTIONS
SGTR	80	600-700 GPM

SPECIAL INSTRUCTIONS:

1) Allow the operators sufficient time to become familiar with plant conditions before initiating any events.
2) Initiate malfunction 80. If the SGTR is of insufficient size to cause an SI, then trip CTMT Hi Pressure bistables (2/3) to get an SI after symptoms appear.

(FORM IPV-3)

INDIAN POINT TWO

SIMULATOR SCENARIO FORM (Cont)

SPECIAL INSTRUCTIONS:

3) Take a snapshot in E-3 right after the maximum rate cooldown and right before plant depressurization for S-6A scenario.

4) Contingency actions
   - o If one-line fix is functioning
     - continue with E-3 into ES-3.1
     - ensure that ES-3.1 is entered even if tag must be hung on ruptured S/G pressure indicators.
   - o If one-line fix is not functioning
     - must hang tags on ruptured S/Gs pressure meters prior to max. rate cooldown
     - inform operators that ruptured S/G pressure is steady at the pressure at which the S/G was isolated
     - during the cooldown the operators must be informed of ruptured S/G pressure (use good engineering judgment).

5) Take a SNAPSHOT just before the completion of E-3. Use this SNAPSHOT to validate ES-3.2 and ES-3.3 (continue initial scenario into ES-3.1). At the completion of ES-3.1 then re-initialize the SNAPSHOT for validation of ES-3.2 and ES-3.3.

6) Terminate the scenario upon receipt of signal from the validation coordinator.

(FORM IPV-3A)

INDIAN POINT TWO

SIMULATOR SCENARIO FORM

SCENARIO NO.: S-6A

PROCEDURE NO.: E-3, ECA-3.1 REVISION: 0

TITLE: SGTR With Loss Of Reactor Coolant

DATE: December 17-21, 1984 IC NO: SNAPSHOT from S-6

PURPOSE: 1) E-3 and ECA-3.1 are usable by the control room operators; 2) Proper transition from E-3 to ECA-3.1 occurs; 3) Use ECA-3.1 to establish cold shutdown conditions while minimizing RCS voiding and inventory loss.

SCENARIO DESCRIPTION: An SGTR recovery is in progress when a station blackout occurs. With the plant in natural circulation (N.C.) the PZR PORV must be used for depressurization. The PZR PORV sticks open.

INITIAL PLANT CONDITIONS: A 600-700 gpm SGTR is in progress. A rapid cooldown has been completed. Plant depressurization is ready to begin.

SIMULATOR SEQUENCE OF MALFUNCTIONS:

DESCRIPTION	NO.	OPTIONS
Station Blackout	28	N/A

SPECIAL INSTRUCTIONS:

1) Initialize plant in SNAPSHOT taken in scenario S-6. Provide an accurate turn-over of plant conditions including procedure/step (cooldown step).
2) Initiate malfunction 28 after the operators begin the use of E-3.

(FORM IPV-3)

INDIAN POINT TWO

SIMULATOR SCENARIO FORM (Cont)

SPECIAL INSTRUCTIONS:

3) After RCS depressurization has begun then tag open the PZR PORV and its respective block valve (make sure it is the PORV being used for depressurization).
4) The following plant conditions must not be exceeded during the use of ECA-3.1.
   - o ruptured S/G level must remain less than 100%
   - o RCS subcooling must remain in specification
5) Take a SNAPSHOT just as soon as ECA-3.1 is entered for scenario S-6A(1)
6) Terminate the scenario upon receipt of signal from the validation coordinator.

(FORM IPV-3A)

INDIAN POINT TWO

SIMULATOR SCENARIO FORM

SCENARIO NO.: S-6A(1)

PROCEDURE NO.: ECA-3.1, ECA-3.2, FR-H.3 REVISION: 0

TITLE: SGTR With Loss Of Reactor Coolant - Saturated Recovery Desired

DATE: December 17-21, 1984 IC NO: SNAPSHOT from S-6A

PURPOSE: 1) ECA-3.1, ECA-3.2, and FR-H.3 are usable by the control room operators; 2) Proper transition from ECA-3.1 to ECA-3.2 occurs; 3) ECA-3.2 is used to establish cold shutdown conditions while minimizing RCS inventory losses.

SCENARIO DESCRIPTION: A large SGTR coupled with a stuck open PZR PORV and block valve is in progress. A saturated recovery is desired because the ruptured S/G level is > 100%.

INITIAL PLANT CONDITIONS: Actions are being taken in ECA-3.1 for the SGTR and the stuck open PZR PORV/block valve.

SIMULATOR SEQUENCE OF MALFUNCTIONS:

DESCRIPTION	NO.	OPTIONS
N/A	N/A	N/A

SPECIAL INSTRUCTIONS:

1) Initialize in SNAPSHOT taken in scenario S-6A.
2) Have the operators begin with step 1 of ECA-3.1.
3) Ensure that the ruptured S/G level is greater than 100% before the subcooled recovery determination step a is encountered by the supervisor.

(FORM IPV-3)

INDIAN POINT TWO

SIMULATOR SCENARIO FORM (Cont)

SPECIAL INSTRUCTIONS:

4) Contingency instructions
   - o If one-line fix is in software
     - open the ruptured S/G PORV and hang a tag to prevent operator use (do this after ECA-3.1 is entered)
   - o If one-line fix is not operable
     - nothing should have to be done to get ruptured S/G level >100%
     - if level is not >100%, then tag open the ruptured S/G PORV.
5) Terminate the scenario upon receipt of signal from the validation coordinator.

(FORM IPV-3A)

INDIAN POINT TWO

SIMULATOR SCENARIO FORM (Cont)

SPECIAL INSTRUCTIONS:

4) Contingency instructions
   - o If one-line fix is in software
     - open the ruptured S/G PORV and hang a tag to prevent operator use (do this after ECA-3.1 is entered)
   - o If one-line fix is not operable
     - nothing should have to be done to get ruptured S/G level >100%
     - if level is not >100%, then tag open the ruptured S/G PORV.
5) Terminate the scenario upon receipt of signal from the validation coordinator.

(FORM IPV-3A)

INDIAN POINT TWO

SIMULATOR SCENARIO FORM

SCENARIO NO.: S-6B

PROCEDURE NO.: E-3, ECA-3.3 REVISION: 0

TITLE: SGTR Without PRZR Pressure Control

DATE: December 17-21, 1984 IC NO: SNAPSHOT from S-6

PURPOSE: 1) E-3 and ECA-3.3 are usable by the control room operators; 2) Proper transition from E-3 to ECA-3.3 occurs; 3) ECA-3.3 provides actions for SGTR coincident with loss of pressure control.

SCENARIO DESCRIPTION: An SGTR recovery is in progress (E-3) when it is discovered that no PRZR pressure control system is operable for plant depressurization.

INITIAL PLANT CONDITIONS: SGTR recovery is in progress with the cooldown completed and depressurization ready to begin.

SIMULATOR SEQUENCE OF MALFUNCTIONS:

DESCRIPTION	NO.	OPTIONS
Both PZR Spray Valves Fail Closed	125	N/A

SPECIAL INSTRUCTIONS:

1) Initialize the simulator with the SNAPSHOT taken in Scenario S-6.
2) Initiate malfunction 125.
3) Just as soon as the operators begin steps in E-3 then tag out the following equipment:
   - o PRZR PORVs tagged closed
   - o Aux spray valve tagged closed

(FORM IPV-3)

INDIAN POINT TWO

SIMULATOR SCENARIO FORM (Cont)

SPECIAL INSTRUCTIONS:

4) If the one-line fix is not incorporated into the software then hang a tag on the ruptured S/G pressure meters or grease pencil in an arrow to show the S/G pressure when it was isolated (if the meters are tagged then the operator should be told the information he needs).

5) Terminate the scenario upon receipt of signal from the validation coordinator.

(FORM IPV-3A)

INDIAN POINT TWO

SIMULATOR SCENARIO FORM

SCENARIO NO.: S-7

PROCEDURE NO.: E-0, E-1, ES-1.3, ES-1.4, F-0 Series, FR-Z.1, FR-Z.3 REVISION: 0

TITLE: Loss Of Reactor Coolant (LOCA)

DATE: December 17-21, 1984 IC NO: 11

PURPOSE: 1) E-0, E-1, ES-1.3, ES-1.4, F-0 Series, FR-Z.1, and FR-Z.3 are usable; 2) Proper transitions occur in the EOPs listed; 3) EOPs provide actions to recover from an LOCA.

SCENARIO DESCRIPTION: A large LOCA occurs while the plant is operating at 100% power.

INITIAL PLANT CONDITIONS: 100% power, equilibrium conditions, EOL, all equipment is operable.

SIMULATOR SEQUENCE OF MALFUNCTIONS:

DESCRIPTION	NO.	OPTIONS
Rupture of Main Steam Piping (S/G No. 23) Within CTMT	19A	N/A
RCS Hot Leg Break	104A	100%

SPECIAL INSTRUCTIONS:

1) Allow the operators sufficient time to become familiar with plant conditions before initiating any events.

(FORM IPV-3)

INDIAN POINT TWO

SIMULATOR SCENARIO FORM (Cont)

SPECIAL INSTRUCTIONS:

2) Initiate malfunction 104A (ensure that RCS pressure will decrease to _ the RHR pump shutoff head) and 19A.
3) Take a SNAPSHOT for use in Scenario S-7A just before the evaluation of plant status is determined for cold leg recirculation.
4) Terminate the scenario upon receipt of signal from the validation coordinator.

Note:
- o If CTMT pressure does not exceed 28 psig then tag CTMT pressure meter. Inform STA that CTMT pressure is 30 psig.
- o If CTMT radiation does not exceed 2 R/HR then tag the meter and inform the STA that CTMT radiation is 3 R/HR.

(FORM IPV-3A)

INDIAN POINT TWO

SIMULATOR SCENARIO FORM

SCENARIO NO.: S-7A

PROCEDURE NO.: E-1, ECA-1.1 REVISION: 0

TITLE: Loss Of Emergency Coolant Recirculation

DATE: December 17-21, 1984 IC NO: SNAPSHOT from S-7

PURPOSE: 1) E-1 and ECA-1.1 are usable by the control room operators; 2) Proper transition of E-1 to ECA-1.1 occurs; 3) ECA-1.1 provides actions to restore recirculation capability, delay RWST depletion, and minimize break flow through RCS depressurization.

SCENARIO DESCRIPTION: E-1 has been implemented for a large LOCA. Since the RHR and CTMT recirculation pumps are unavailable, actions must be taken to restore capability.

INITIAL PLANT CONDITIONS: Large LOCA has occurred with actions being taken in E-1.

SIMULATOR SEQUENCE OF MALFUNCTIONS:

DESCRIPTION	NO.	OPTIONS
N/A	N/A	N/A

SPECIAL INSTRUCTIONS:

1) Initialize the plant with the SNAPSHOT taken in scenario S-7.
2) Disable all RHR pumps and CTMT recirculation pumps and hang tags after the operators commence using E-1.
3) Terminate the scenario upon receipt of signal from the validation coordinator.

(FORM IPV-3)

INDIAN POINT TWO

SIMULATOR SCENARIO FORM

SCENARIO NO.: S-8

PROCEDURE NO.: E-0, E-1, ES-1.2 REVISION: 0

TITLE: Post LOCA Cooldown And Depressurization

DATE: December 17-21, 1984 IC NO: 11

PURPOSE: 1) E-1, E-1, ES-1.2 are usable by the control room operators; 2) Proper transitions from E-0 to E-1 and ES-1.2 occur; 3) ES-1.2 provides actions to place the plant in cold shutdown conditions during an LOCA.

SCENARIO DESCRIPTION: A small LOCA occurs while operating at 100% power.

INITIAL PLANT CONDITIONS: 100% power, equilibrium conditions, EOL, all systems operable.

SIMULATOR SEQUENCE OF MALFUNCTIONS:

DESCRIPTION	NO.	OPTIONS
Accidental opening of safety valve No. 464	057A	safety valve set to reseat at 0 PSIG, remains 75% open

SPECIAL INSTRUCTIONS:

1) Allow the operators sufficient time to become familiar with plant conditions before initiating any events.
2) Initiate malfunction 057A. Insure leak rate is sufficient to cause an SI.
3) Terminate the scenario upon receipt of signal from validation coordinator.

(FORM IPV-3)

INDIAN POINT TWO

SIMULATOR SCENARIO FORM

SCENARIO NO.: S-9

PROCEDURE NO.: E-0, ES-1.1 REVISION: 0

TITLE: Inadvertent SI

DATE: December 17-21, 1984 IC NO: 11

PURPOSE: 1) E-0 and ES-1.1 are usable by the control room operators; 2) Proper transition from E-0 to ES-1.1 occur; 3) ES-1.1 provides instructions to terminate SI and stabilize plant conditions.

SCENARIO DESCRIPTION: An inadvertent SI occurs because of human error.

INITIAL PLANT CONDITIONS: 100% power, equilibrium conditions, EOL, all systems operable.

SIMULATOR SEQUENCE OF MALFUNCTIONS:

DESCRIPTION	NO.	OPTIONS
N/A	N/A	N/A

SPECIAL INSTRUCTIONS:

1) Allow the operators sufficient time to become familiar with plant conditions before initiating any events.
2) Trip CTMT Hi Pressure SI bistables (2/3) to initiate the inadvertent SI.
3) Terminate the scenario upon receipt of signal from validation coordinator.

(FORM IPV-3)

INDIAN POINT TWO

SIMULATOR SCENARIO FORM

SCENARIO NO.: S-10

PROCEDURE NO.: E-0, ECA-1.2 REVISION: 0

TITLE: LOCA Outside Containment

DATE: December 17-21, 1984 IC NO: 11

PURPOSE: 1) E-0 and ECA-1.2 are usable by the control room operators; 2) Proper transition from E-0 to ECA-1.2 occurs; 3) ECA-1.2 provides actions to identify and isolate an LOCA outside CTMT.

SCENARIO DESCRIPTION: While operating at 100% power an LOCA occurs outside CTMT.

INITIAL PLANT CONDITIONS: 100% power, equilibrium conditions, EOL, all equipment operable.

SIMULATOR SEQUENCE OF MALFUNCTIONS:

DESCRIPTION	NO.	OPTIONS
RCS Hot Leg Break	104	1% Break

SPECIAL INSTRUCTIONS:

1) Allow the operators sufficient time to become familiar with plant conditions before initiating any events.
2) Initiate malfunction 104

(FORM IPV-3)

INDIAN POINT TWO

SIMULATOR SCENARIO FORM (Cont)

SPECIAL INSTRUCTIONS:

3) Immediately after initiating the malfunction tag the following CTMT instrumentation.
   - o pressure
   - o dew point
   - o all CTMT radiation monitors
   - o sump levels
   - o PRT temperature

   Inform the operators that all CTMT parameters are normal.
4) Tag the auxiliary building radiation monitors and inform the operator (when asked) that the auxiliary building radiation particulate is abnormally high.
5) Terminate the scenario upon receipt of signal from validation coordinator.

(FORM IPV-3A)

INDIAN POINT TWO

SIMULATOR SCENARIO FORM

SCENARIO NO.: S-11

PROCEDURE NO.: ECA-0.0, ECA-0.1 REVISION: 0

TITLE: Loss of All AC Power/Recovery Without SI Required

DATE: December 17-21, 1984 IC NO: 11

PURPOSE: 1) ECA-0.0 and ECA-0.1 are usable by control room operators; 2) Proper transition from ECA-0.0 to ECA-0.1 occurs; 3) ECA-0.0 provides proper actions to respond to a loss of all AC and ECA-0.1 provides actions to stabilize the plant following 480V restoration.

INITIAL PLANT CONDITIONS: 100% power, equilibrium conditions, EOL, all equipment operable except one diesel generator (tagged out for routine preventative maintenance).

SCENARIO DESCRIPTION: A fault on the grid causes a blackout. However, emergency generation equipment fail to energize the 480V busses.

DESCRIPTION	NO.	OPTIONS
Manual Reactor Trip	39A	N/A
Station Blackout	28	N/A
23 E.D.G. Failure	38	N/A

SPECIAL INSTRUCTIONS:

1) Allow the operators sufficient time to become familiar with plant conditions before initiating any events.

(FORM IPV-3)

INDIAN POINT TWO

SIMULATOR SCENARIO FORM (Cont)

SPECIAL INSTRUCTIONS:

2) Inform the supervisor that the diesel will be tagged out for four hours (has been down for one hour already).
3) Initiate malfunctions 28 and 38.
4) Hang equipment inoperable tags on all the emergency power generation equipment
5) After ECA-0.0 step 17 has been completed then return the diesel to service that was tagged out for maintenance.
6) Terminate the scenario upon receipt of signal from the validation coordinator.

(FORM IPV-3A)

INDIAN POINT TWO

SIMULATOR SCENARIO FORM

SCENARIO NO.: S-11A

PROCEDURE NO.: ECA-0.2 REVISION: 0

TITLE: Loss of All AC Power Recovery With SI Required

DATE: December 17-21, 1984 IC NO: N/A

PURPOSE: 1) ECA-0.2 is usable by control room operators; 2) Proper transition from ECA-0.0 to ECA-0.1 occurs; 3) ECA-0.2 provides actions to use engineered safeguards systems to recover plant conditions.

INITIAL PLANT CONDITIONS: Recovery from loss of all AC is in progress. Supervisor is in ECA-0.0 on step 26.

SCENARIO DESCRIPTION: A loss of all AC has occurred. The failure of RCP seals requires the use of safeguards equipment for the recovery.

DESCRIPTION	NO.	OPTIONS
RCS Hot Leg Break	104A	20%

SPECIAL INSTRUCTIONS:

1) Initialize simulator in SNAPSHOT taken in S-11.
2) Initiate malfunction 104A (ensure break is large enough to force entry into ECA-0.2).
3) Terminate the scenario upon receipt of signal from the validation coordinator.

(FORM IPV-3)

INDIAN POINT TWO

SIMULATOR SCENARIO FORM

SCENARIO NO.: S-12

PROCEDURE NO.: ES-0.2 REVISION: 0

TITLE: Natural Circulation Cooldown

DATE: December 17-21, 1984 IC NO: 11

PURPOSE: 1) ES-0.2 is usable by control room operators; 2) An RCS cooldown and depressurization to cold shutdown (no upper head voiding) is achieved with ES-0.2.

INITIAL PLANT CONDITIONS: 100% power, equilibrium conditions, EOL, all equipment operable, refueling outage planned in two weeks.

SCENARIO DESCRIPTION: During a severe thunder storm, lightning struck the grid. The plant tripped because of the surge. A blackout occurs (station aux transformer has failed). Cooldown to cold shutdown is ordered.

DESCRIPTION	NO.	OPTIONS
Manual Reactor Trip	39	N/A
Station Blackout	28	N/A

SPECIAL INSTRUCTIONS:

1) Allow the operators sufficient time to become familiar with plant conditions before initiating any events.
2) Initiate malfunctions 39 and 28.

(FORM IPV-3)

INDIAN POINT TWO

SIMULATOR SCENARIO FORM (Cont)

SPECIAL INSTRUCTIONS:

3) Plant management decides to conduct a cooldown for the refueling outage two weeks early.
4) Take a SNAPSHOT at the conclusion of ES-0.1.
5) Terminate the scenario upon receipt of signal from the validation coordinator.

Note: Set in max decay heat for this scenario.

(FORM IPV-3A)

INDIAN POINT TWO

SIMULATOR SCENARIO FORM

SCENARIO NO.: S-12A

PROCEDURE NO.: ES-0.3 and ES-0.4 REVISION: 0

TITLE: Natural Circulation Cooldown with Steam Void

DATE: December 17-21, 1984 IC NO: 11

PURPOSE: 1) ES-0.3 and ES-0.4 is usable by control room operators; 2) Cold shutdown conditions achieved with ES-0.3 and ES-0.4 despite potential for upper head region void formation.

INITIAL PLANT CONDITIONS: N.C. cooldown (ES-0.2) in progress after Rx trip (caused by loss of CCW to RCPs). RCP seal injection flow was also lost.

SCENARIO DESCRIPTION: RCP seal failure is imminent based on plant conditions (head voids may form). A max cooldown rate is desired in order to reduce plant pressure.

DESCRIPTION	NO.	OPTIONS
N/A	N/A	N/A

SPECIAL INSTRUCTIONS:

1) Reinitialize in SNAPSHOT taken in scenario S-12.
2) ES-0.2 has just been implemented for N.C. cooldown.
3) Isolate RCP seal injection flow and hand inoperable tags.
4) ES-0.3 should be implemented with an instructor providing RVLIS readings as needed.

(FORM IPV-3)

INDIAN POINT TWO

SIMULATOR SCENARIO FORM (Cont)

SPECIAL INSTRUCTIONS:

5) After ES-0.3 is done then re-initialize in the SNAPSHOT taken in scenario S-12. RVLIS is not functioning so ES-0.4 should be implemented.
6) Terminate the scenario upon receipt of signal from the validation coordinator.

(FORM IPV-3A)

INDIAN POINT TWO

TABLE-TOP/WALK-THROUGH SCENARIO FORM

SCENARIO NO.: WT-1

EOP NO.: ES-0.2

TITLE: Natural Circulation Cooldown

DATE: December 17-21, 1984

PURPOSE: 1) ES-0.2 is usable by the control room operators; 2) An RCS cooldown and depressurization to cold shutdown (no upper head voiding) is achieved with ES-0.2.

INITIAL PLANT CONDITIONS: 100% power, equilibrium conditions, EOL, all equipment operable, refueling outage planned in two weeks.

SCENARIO DESCRIPTION: During a severe thunder storm, lightning struck the grid. The plant tripped due to the surge. A blackout occurs (the station aux transformer has failed). Management decides to start the refueling outage 2 weeks early. A cooldown to refueling mode is ordered upon completion of ES-0.1.

PROCEDURE STEP DESCRIPTION	PLANT PARAMETER/ SYMPTOM TO CAUSE TRANSITION	TRANSITION TO (PROCEDURE, STEP)
ES-0.1;16	o cooldown required o no RCPs due to blackout	ES-0.2:1

(FORM IPV-2)

INDIAN POINT TWO

TABLE-TOP/WALK-THROUGH SCENARIO FORM

SCENARIO NO.: WT-2

EOP NO.: ES-0.3

TITLE: Natural Circulation Cooldown With Steam Void In Vessel

DATE: December 17-21, 1984

PURPOSE: 1) ES-0.3 is usable by the control room operators; 2) Cold shutdown conditions achieved with ES-0.3 despite potential for upper head region void formation.

INITIAL PLANT CONDITIONS: Natural circulation cooldown (ES-0.2) is in progress after the Rx trip. Rx trip was caused by a loss of CCW to the RCPs. Seal injection flow was also lost due to sabotage of the RCP seal injection valves.

SCENARIO DESCRIPTION: RCP seal failure is imminent based on plant conditions. Therefore, upper head region voiding formation may occur during the cooldown. Also, a maximum allowed cooldown rate is desired to reduce plant pressure.

PROCEDURE STEP DESCRIPTION	PLANT PARAMETER/ SYMPTOM TO CAUSE TRANSITION	TRANSITION TO (PROCEDURE, STEP)
ES-0.2:12 NOTE	Cooldown must be performed at a rate that may cause steam void formation....	ES-0.3:1

(FORM IPV-2)

INDIAN POINT TWO

TABLE-TOP/WALK-THROUGH SCENARIO FORM

SCENARIO NO.: WT-3

EOP NO.: F-0.1, FR-S.2

TITLE: Response To Loss Of Core Shutdown

DATE: December 17-21, 1984

PURPOSE: 1) FR-S.2 is usable by control room operators; 2) proper transition from F-0.1 to FR-S.2; 3) FR-S.2 restores core to an adequate shutdown condition.

INITIAL PLANT CONDITIONS: Reactor has tripped on low S/G level. Operators are in ES-0.1 after transition from E-0.

SCENARIO DESCRIPTION: The plant has tripped from 100% power because of low S/G level. After transitioning from E-0 to ES-0.1, the STA notes that I.R. SUR is approximately -0.1 DPM (S.R. deenergized). I.R. flux is not decreasing but holding steady.

PROCEDURE STEP DESCRIPTION	PLANT PARAMETER/ SYMPTOM TO CAUSE TRANSITION	TRANSITION TO (PROCEDURE, STEP)
F-0.1 Yellow Terminus	Intermediate Range $>$ - 0.2 DPM but $<$ 0 DPM	FR-S.2:1

(FORM IPV-2)

INDIAN POINT TWO

TABLE-TOP/WALK-THROUGH SCENARIO FORM

SCENARIO NO.: WT-4

EOP NO.: F-0.2, FR-C.1, FR-C.2, FR-C.3

TITLE: Inadequate Core Cooling

DATE: December 17-21, 1984

PURPOSE: 1) F-0.2 and FR-C.1, C.2, C.3 are usable by the control room operators; 2) FR-C.1, C.2, C.3 provide actions to either restore subcooled core conditions or restore adequate core cooling.

INITIAL PLANT CONDITIONS: Operators are beginning to take actions in E-1 for the LOCA.

SCENARIO DESCRIPTION: A large LOCA has occurred and the ECCS system has failed to function as designed (no charging, SI or RHR pumps). Inadequate core cooling quickly becomes a problem. Station auxiliary transformer failed on a fault after Reactor Trip (No RCPs).

PROCEDURE STEP DESCRIPTION	PLANT PARAMETER/ SYMPTOM TO CAUSE TRANSITION	TRANSITION TO (PROCEDURE, STEP)
F-0.2 Yellow Terminus	o Core Exit RCs < 700°F o RVLIS NC Range > 39%	FR-C.3:1
F-0.2 Orange Terminus	o Core Exit TCs < 700°F o RVLIS NC Range < 39%	FR-C.2:1
F-0.2 Red Terminus	o Core Exit TCs > 700°F o RVLIS NC Range < 39%	FR-C.2:1

(FORM IPV-2)

INDIAN POINT TWO

TABLE-TOP/WALK-THROUGH SCENARIO FORM

SCENARIO NO.: WT-5

EOP NO.: F-0.3, FR-H.2, FR-H.4

TITLE: S/G Overpressure

DATE: December 17-21, 1984

PURPOSE: 1) F-0.3, FR-H.2, and FR-H.4 are usable by control room operators; 2) FR-H.4 and FR-H.2 provide actions for S/G steam release capability and minimize any overpressure situation.

INITIAL PLANT CONDITIONS: Operators have just transitioned to ES-0.1 for the reactor trip.

SCENARIO DESCRIPTION: The reactor trips from 100% power because S/G "A" MSIV failed to a closed position. The affected S/G PORV and safeties fail to open which causes an overpressure situation.

PROCEDURE STEP DESCRIPTION		PLANT PARAMETER/ SYMPTOM TO CAUSE TRANSITION	TRANSITION TO (PROCEDURE, STEP)
F-0.3 Yellow Terminus	o	Pressure in S/G with failed MSIV > 1065 psig	FR-H.4:1
F-0.3 Yellow Terminus	o	Pressure in S/G with failed MSIV > 1120 psig	FR-H.2:1

(FORM IPV-2)

INDIAN POINT TWO

TABLE-TOP/WALK-THROUGH SCENARIO FORM

SCENARIO NO.: WT-6

EOP NO.: F-0.5, FR-Z.2

TITLE: Containment Flooding

DATE: December 17-21, 1984

PURPOSE: 1) F-0.5 and FR-Z.2 are usable by the control room operators.

INITIAL PLANT CONDITIONS: A Rx trip and SI has occurred because of a large LOCA. Transition from E-0 to E-1 has just taken place.

SCENARIO DESCRIPTION: A large LOCA has occurred inside CTMT.

PROCEDURE STEP DESCRIPTION	PLANT PARAMETER/ SYMPTOM TO CAUSE TRANSITION	TRANSITION TO (PROCEDURE, STEP)
F-0.5 Orange Terminus	CTMT sump level > 49'9"	FR-Z.2:1

(FORM IPV-2)

INDIAN POINT TWO

TABLE-TOP/WALK-THROUGH SCENARIO FORM

SCENARIO NO.: WT-7

EOP NO.: F-0.6, FR-I.3

TITLE: Voids In Reactor Vessel

DATE: December 17-21, 1984

PURPOSE: 1) F-0.6 and FR-I.3 are usable by the control room operators; 2) FR-I.3 provides actions to respond to voids in the reactor vessel head.

INITIAL PLANT CONDITIONS: Operators are in ES-1.2 step 15 for cooldown and depressurization to cold shutdown conditions. An LOCA is in progress. SI pumps have been stopped.

SCENARIO DESCRIPTION: A previous LOCA and failure of the ECCS has produced a degraded core condition. ECCS pumps were repaired and core level recovered. However, RVLIS indicates that a hydrogen bubble exists in the head.

PROCEDURE STEP DESCRIPTION	PLANT PARAMETER/ SYMPTOM TO CAUSE TRANSITION	TRANSITION TO (PROCEDURE, STEP)
F-0.6 Yellow Terminus	o PRZR level < 92% but > 18% o RVLIS upper head level < 94%	FR-I.3:1

(FORM IPV-2)

INDIAN POINT TWO

SIMULATOR SCENARIO FORM

SCENARIO NO.: P-1

PROCEDURE NO.: E-0, E-2, E-2, and FR-H.5 REVISION: 0

TITLE: Steam Break and SGTR

DATE: December 14, 1984 IC NO: 11

PURPOSE: 1) E-0, E-2, E-3, and FR-H.5 are usable by control room operators; 2) Proper transitions occur between EOPs; 3) Plant is cooled down and depressurized while minimizing RCS inventory losses and voiding.

INITIAL PLANT CONDITIONS: 100% power, equilibrium conditions, EOL, all equipment operable.

SCENARIO DESCRIPTION: While operating at 100% power all external load was lost. The RCS pressure surge caused S/G No. 21 to have an SGTR along with the S/G PORV failing open.

DESCRIPTION	NO.	OPTIONS
Loss of External Electrical Load	26A	N/A
SGTR (S/G No. 21)	80	Max Size

SPECIAL INSTRUCTIONS:

1) Allow the operators sufficient time to become familiar with plant conditions before initiating any events.
2) Initiate malfunction 26A.

(FORM IPV-3)

INDIAN POINT TWO

SIMULATOR SCENARIO FORM (Cont)

SPECIAL INSTRUCTIONS:

3) After Rx trips then perform the following actions:
   - o initiate Malf. 80
   - o open S/G No. 21 PORV 100% and then tag
4) Terminate the scenario upon receipt of signal from the validation coordinator.

4) Take a SNAPSHOT at the conclusion of ES-0.1.
5) Terminate the scenario upon receipt of signal from the validation coordinator.

Note: Set in max decay heat for this scenario.

(FORM IPV-3A)

APPENDIX E

VALIDATION TRAINING PROGRAM OUTLINE

INDIAN POINT NO. 2 VALIDATION TRAINING COURSE

	DAY 1	DAY 2	DAY 3	DAY 4	DAY 5
CLASSROOM	o Validation Test Program o Introduction to EOPs o TFCs o Demonstration of EOPs o Users Guide o E-O Series o CSF Status Trees	o Review o E-1 Series o FR-Z.1, Z.2 & Z.3 o FR-C.1, C.2 & C.3 o ECA-0.0 o ECA-0.1 o ECA-0.2	o Review o ES-1.1 o E-2 o ECA-1.1 o FCA-1.2	o Review o E-3 Series o FR-I.2 & I.3 o ECA-3.1 o ECA-3.2 o FR-H.2, H.3, H.4 & H.5 o ECA-3.3	o Review o FR-S.1 & S.2 o FR-H.1 o ECA-2.1 o FR-P.1 o FR-P.2 o FR-I.1
WALKTHROUGH	o E-O o ES-0.0 o ES-0.1 o ES-0.2 o ES-0.3 o CSF Status Trees	o E-1 o ES-1.2 o ES-1.3 o ES-1.4 o FR-C.1, C.2 & C.3 o FR-Z.1, Z.2, & Z.3 o ECA-0.0 o ECA-0.1 o ECA-0.2	o ES-1.1 o E-2 o ECA-1.1 o ECA-1.2	o E-3 o ES-3.1, 3.2 & 3.3 o FR-I.2 & I.3 o ECA-3.1, 3.2 & 3.3 o FR-H.2, H.3, H.4 & H.5	o FR-S.1 & S.2 o FR-H.1 o ECA-2.1 o FR-P.1 o FR-P.2 o FR-I.1
SIMULATOR	o RX Trip (S-1) o NC Cooldown (WT-1 & WT-2)	o Large LOCA (S-7) o Small LOCA (S-8) o Loss of All AC (S-11)	o Loss of Emergency Coolant Recirculation Capability (S-7A) o Inadvertent SI (S-9) o LOCA OUtside CTMT (S-10) o Steam Break (S-4)	o SGTR (S-6) o SGTR with LOCA (S-6A & S-6A1) o SGTR Without Pressure Control (S-6B)	o ATWS (S-2) o Loss of Seconda Heat Sink (S-3) o Uncontrolled Depressurizatio of all S/Gs (S-

APPENDIX F

SUMMARY OF VALIDATION TEST DEVIATIONS AND RESOLUTIONS

INTRODUCTION

During the validation test week all deviations identified during scenario runs were recorded in numerical order on Form IPV-4 as they were presented during the debriefing sessions. Since many EOPs were covered multiple times during the test week, many deviations pertaining to individual EOPs were not in numerical order. Therefore, deviations previously recorded on Form IPV-4 have been segregated into groups pertaining to a specific EOP. Furthermore, these groups have been separated into specific categories. Category A contains all deviations that will result in specific changes to the EOPs. Category B contains deviations of a nature that do not require any specific action for resolution. Deviations that are to be submitted to the Westinghouse Owners Group Maintenance Program are starred (*) for identification purposes.

CATEGORY A DEVIATIONS

DEV. NO.	EOP/ STEP NO.	"S" NO.	DEVIATION	RESOLUTION
4	E-0/4	9	o Add the following to step 4: 4g. Start one charging o Reword step 21 to "verify one charging ..."	o Add step 4g. "Start one charging pump as necessary" o Reword step 21 "Verify one charging pump running at.."
6	E-0/6	9	Remove information in last bullet	Delete "S/G sample isolation valve-closed" based on design change
7	E-0/11	9	Revise wording "Verify service water bypass gates - OPEN" and RNO to "Manually open ..."	Revise 11c. to read "Verify service water bypass gates OPEN" and RNO to "Manually open associated ..."
8	E-0/9	29	Add R-7 to containment radiation monitor	Revise monitors to "(R-2, R-7)"
20	E-0/ foldout	11	Switch numbers 3. and 4. on E-0 series foldout page	Shift RED path summaries to last on all foldout pages
36	E-0/4c	9	Step 4c. requires rewording	Revise step 4c. to "Unit power - 6.9KV busses transferred to busses 5 and 6" (also incorporate this change in ES-0.1)
75	E-0/29	10	Consider rewording "gaseous particulate monitor recorder radiation"	Delete "monitor" in both bullets where it appears

CATEGORY A DEVIATIONS (cont.)

DEV. NO.	EOP/ STEP NO.	"S" NO.	DEVIATION	RESOLUTION
9	E-0/36	9	This step should be modified to reflect current modifications.	Step revised to reflect modified SI reset circuit.
101	E-0/4c	9	Make changes to "6.9 KV" and "Busses 5 and 6"	See deviation number 36
73	E-0	10	Many times the foldout was not opened.	o Many plants are putting the foldout page on the back of each EOP page. o Another option would be to place a color tab on each foldout page for easier identification. o Training should emphasize the proper use of the foldout pages.
63	ES-0.1/ 3a RNO	12	Change RNO to "If temperatures to 541°F"	Revise RNO to "If temperature decreases to less than 541°F, then do steps 3b and c"
64 *	ES-0.1/ 6	12	If PRZR level < 18%, no guidance to place letdown in service is contained in the remainder of the EOP	Between substeps 3) and 4) include a substep "When PRZR level greater than 18%, then place letdown in service"
66 *	ES-0.1/ 3a	12	Add "average" to the 541°F check	Revise step to read "RCS average temperature"

CATEGORY A DEVIATIONS (cont.)

DEV. NO.	EOP/ STEP NO.	"S" NO.	DEVIATION	RESOLUTION
67	ES-0.1/ 15	12	Add "after shafts stop" at the end of step	o Revise step 15 by adding "after shafts stop" at end of step o Also revise the same step in ES-1.1
68	ES-0.2/ 6d	12	Include Tech Spec cooldown curve figure 3.1-2 as figure 3.1-2 as figure ES02-2 (or renumber)	o Include current wording but insert "(refer to figure ES02-1)" and renumber the other figures o factor this change into other affected EOPs
70	ES-0.3/ 15 RNO	12	Change to "Depressurize"	Correct "Pressurize" to "Depressurize"
71	ES-0.3/ 4e	12	If aux. spray was started in ES-0.2, then are the substeps really necessary	o Step 4e should be a followup depressurization from ES-0.2. Details in substeps can be deleted o Comparable step in ES-0.4
72	ES-0.3/ 1 note	12	Change note from "on RCP" to "an RCP"	Correct note by changing "on" to "an"
85	ES-0.4/ 4b	12A	This deviation is the same as number 71	See deviation 71

CATEGORY A DEVIATIONS (cont.)

DEV. NO.	EOP/ STEP NO.	"S" NO.	DEVIATION	RESOLUTION
86	ES-0.4/ 8	12A	High level step included twice	Correct to make consistent with ES-0.3 step
87	ES-0.1	12A	Attach Tech Spec curves for this EOP	See resolution for deviation number 68
90	E-1	WT-4	Foldout page not was missed.	See deviation 73
10	ES-1.1/ 2	9	The "SO" panel should really be the "SN" panel	Change "SO" to "SN"
13	ES-1.1	9	Add "flush SI lines" to ES-1.1	Add caution which was originally deleted from ERGs
106	ES-1.2	8	Initially confused "charging pump status" with "SI pump status"	o Reorder substep 136 to first check one charging pump running before RCS subcooling table o Eliminate "none running" case from subcooling table
57	ES-1.4/ 7 RNO	7	Add "switch #7" with "switch #1"	Add "switch #6"
61	ES-1.4/ 86		Insert after 86 "check switch No. 7 - off" to A/ER and insert "place in OFF position" in RNO	Make change as noted in deviation

CATEGORY A DEVIATIONS (cont.)

DEV. NO.	EOP/ STEP NO.	"S" NO.	DEVIATION	RESOLUTION
1	E-3/ 16 RNO	P-1	The information "pressure continues to decrease to less than 100 psi more than intact S/G pressure" was so confusing to the operators that they incorrectly transitioned to ECA-3.1	Change "more than" to "above the" and "SG pressure" to "SG pressures"
39	E-3/ 3	S-6	Add to step 36 "When Tavg less than 541°F"	Make addition as stated in deviation
40	E-3/ 37	S-6	"Consult COE" is missing in this step	Add caution "consult COE to determine appropriate cooldown method"
41	E-3/ 146		An excessive steam flowrate ($>10^6$ lbm/hr) will cause automatic closure of MSIVs	Add caution "Steam dump to the condenser should be maintained less than 33% steam flow (10^6 lbm/hr) to prevent main steam-line isolation"
50	ES-3.1/ 10a	6	RCP are required to be tripped when flow $<$.3 gpm while the SOP requirement is 0.2 gpm	Verify the SOP flow rate and change 0.3 to 0.2 if necessary

CATEGORY A DEVIATIONS (cont.)

DEV. NO.	EOP/ STEP NO.	"S" NO.	DEVIATION	RESOLUTION
16	ECA-0.0/ 7	11	Change "unenergized 480 v busses" to "unenergized MCCS" and "instrumentation and control" to "instrumentation busses"	Make change as specified in deviation
21	ECA-0.0/ 7	11	Change the order of equipment to: Containment spray pumps SI pumps FCUS MD AFW pumps CCW pumps RHR pumps	Change step to the preferred order specified in deviation
22	ECA-0.0/ 14	11	Delete the caution prior to this step since ECA-0.0 is more severe than a RED or an ORANGE FRP	Delete caution
23	ECA-0.0/ 8	11	An inconsistency exists between transition to step 24 or 25	Alter 8c. to read "Go to step 25"
115	ECA-0.0	11A	Instrument air was established after power was restored (around step 10)	The instrument air step is needed in ECA-0.2. Add to step 4.

CATEGORY A DEVIATIONS (cont.)

DEV. NO.	EOP/ STEP NO.	"S" NO.	DEVIATION	RESOLUTION
15	ECA-0.1/ 14	11	RNO "use PRZR heaters..." needs "as necessary" added	Add "as necessary" after "block valve" in RNO
17	ECA-0.1/ 8	11	Add "if necessary" in part C	Make addition as stated in deviation
18	ECA-0.1/ 4		Change 25 gpm to 32 gpm since the speed controller will not allow a flow<32 gpm	Change 25 gpm to 32 gpm and revise footnote document
24	ECA-0.1/ 7	11	High level step needs to be revised to include "for energized busses"	High level step should read "place pump switches for energized busses in Auto"
112	ECA-0.2/ 1	11A	City water can be used as an alternate water supply in CCW. This information should be taken into consideration for other steps (especially the AC 480 v bus cross-tie).	Not necessary. Covered in "A" procedures.
113	ECA-0.2/ 4	11A	Specify service water pump first	Make specified change
82	ECA-1.1/ 1	10	This step requires more detail.	Detail added.

CATEGORY A DEVIATIONS (cont.)

DEV. NO.	EOP/ STEP NO.	"S" NO.	DEVIATION	RESOLUTION
77	ECA-1.2/ 2	10	In order for operator to perform the specified step SI and phase A need to be reset	Add steps (2, 3, and 4) to reset SI, phase A and B, plus establish instrument air
78	ECA-1.2/ 2	10	Operators initially misinterpretted the requirement to sequentially open and close sets of valves	Change "valves" to "valve set" in two places
79	ECA-1.2/ 2	10	Consider shutting all valves in this step	o Performing 2.a.1) isolates the potentially largest break first o See deviation 78 resolution o Training
93	ECA-3.1/ 14	6A	An "-or-" is missing which caused an incorrect transition	Add an "-or-"
95	ECA-3.1/ 13	6A	Recirculation sump level should be converted to feet-inches in elevation (34' 0" elevation = 0" on graph)	Change scale on figure ECA 31-1 and relabel as elevation
117	ECA-3.1/ 6	T.W.	Delete "SI"	Make change

CATEGORY A DEVIATIONS (cont.)

DEV. NO.	EOP/ STEP NO.	"S" NO.	DEVIATION	RESOLUTION
2	ECA-3.2	P-1	The two paragraph do not appear to wrong together. The statements appear to coincide with C.1) and C.2) when they actually belong to C RNO. The two statements should be separated by an "or"	Refer to the resolution in deviation 106
94	ECA-3.2/ 24 RNO	6A(1)	Step 23 should be step 25	Make change
56	ECA-3.3/ 29	6B	Consult COE to determine which cooldown method to use	Add caution as resolved in deviation 40
55	F-0.4	6B	For cold overpressure which temperature should be used (Tc, Th, or TAVG)	Use cold leg temperature
107	F-0.6	S-8	Change RVLIS to a table for both pumps running and natural circulation. Also note that no upper head range is available	Insert table on status tree for reference (see FR-I.3 attachment for table)

CATEGORY A DEVIATIONS (cont.)

DEV. NO.	EOP/ STEP NO.	"S" NO.	DEVIATION	RESOLUTION
25 *	FR-S.1/ 3		Proposed that the following step be inserted before step 4 to prevent unnecessary boration: "Verify reactor subcritical	Make addition as specified in deviation
			a. power range channels - less than 5%	a. Go to step 5
			b. intermediate range channels - negative startup rate	b. Go to step 5
			c. return to procedure and step in effect"	
26	FR-S.1/ 4	2	Rewrite step 4 RNO: 1) start one SI pump 2) block low pressure SI 3) depressurizer... and delete BIT level requirement	Add "2) Block low PRZR pressure SI as necessary and delete BIT level substep"
91	FR-C.1/ 11	WT4	Excessive steam dumping may cause an unwanted closure of MSIVs	See deviation 41 resolution
28	FR-H.1/ 12		SI needs to be blocked prior to step 12	Add a caution before step 12 to block SI after pressure has decreased below 1940 psig

CATEGORY A DEVIATIONS (cont.)

DEV. NO.	EOP/ STEP NO.	"S" NO.	DEVIATION	RESOLUTION
29	FR-H.1/ 6	3	Condensate is lost after step 4 but before step 6. Step 6 assumes that condensate is available when it may not be	Add step 4a as step 6a
33	FR-H.1/ 6		Add an additional contingency (from A-21-1) to part d. This contingency involves the lifting and relocation of a live lead.	Step revised to include this contingency.
30	FR-H.1/ 12		Opening an PORV will initiate SI	Refer to deviation 28
97	FR-P.1	5	A conflict exists among ECA-2.1, FR-P.1, and FR-H.1 interactions	A note or caution is needed in FR-P.1. Add caution to ECA-2.1 and a modified caution in FR-H.1
99	FR-P.1/ 3		Wording confused the operators	o The question may be asked "Is the cold overpressure system in service" o See deviation 100
100	FR-P.1/ 3	5	Cold overpressure system is referred to as overpressure system (OPS)	Change "cold overpressure system" to OPS in FR-P.1 and F-0.4
109	FR-P.2/ 1e RNO	WT-3	Change "RCS control" to "RCS temperature control"	Make change as indicated in deviation

CATEGORY A DEVIATIONS (cont.)

DEV. NO.	EOP/ STEP NO.	"S" NO.	DEVIATION	RESOLUTION
110	FR-P.2/ 3	WT-3	Provide Tech Spec cooldown curve as attachment	Include curve as an attachment
103 *	FR-I.3/ 17	8	Change "Temperature + 460, containment pressure + 14.7, and containment volume number" on figure in Attachment B	Make change as indicated in deviation
3	All	P-1	Phase A reset should be changed from SO panel to SN panel throughout the EOPs	o Make change as indicated in deviation o See deviation 10

CATEGORY B DEVIATIONS

DEV. NO.	EOP/ STEP NO.	"S" NO.	DEVIATION	RESOLUTION
5	E-0/ 3	9	Concerned with saving the BIT if needed later or allowing the BIT to recirc back to the RWST. Tech Specs would require plant cooldown to 350°F if the BIT did not have the correct boron concentration and volume. Investigate the possibility of isolating the BIT if RCS pressure > SI pump shutoff head pressure	No action warranted. The EOPs are presently written within the design basis of the FSAR
58	E-0/ 22	7	Have NPO check battery chargers	Provide operator training
59	E-0/ 24	7	The operator did not dump steam as required with Tavg at 555°F based on his knowledge of a large break	Requires operator training
60	E-0	7	RWST level of 10.23 cannot be read on the meter	RWST level of 10.23 represents an alarm setpoint so training should emphasize this
62	E-0/ 3	12	Initially missed the step but later returned	The operators need further experience in using the EOPs

CATEGORY B DEVIATIONS (cont.)

DEV. NO.	EOP/ STEP NO.	"S" NO.	DEVIATION	RESOLUTION
74	E-0/ 24	10	Meter and recorder trending need to be emphasized in training	Training item
89	E-0/ 26	WT-4	Operator responded based on SI pumps running and injection flow (pressure < pump shutoff head)	In reality, SI pumps would not be running with suction values closed. The EOP wording "at least one running" would provide correct response if RCS pressure was higher than pump shutoff head. This is a training item
76	E-0/ 33b RNO	10	Consider revising RNO as a note.	No change recommended at this time. This deviation should be submitted to the WOG Maintenance Program.
65	ES-0.1/ 2	12	Trending should be emphasized in training for all steps requesting trend indications	A requirement for EOP training
69	ES-0.2/ 8	12	Step 8 was partially performed before the cooldown to 550°F was completed	o Operator actions were acceptable provided that depreciation was not performed (avoid upper head bubble formation) o Should be emphasized in training

CATEGORY B DEVIATIONS (cont.)

DEV. NO.	EOP/ STEP NO.	"S" NO.	DEVIATION	RESOLUTION
84	ES-0.4/ 36	12A	Instead of requiring a specific pressure, a pressure band should be stipulated	Training should define the meaning of "at" to mean close to but no fixed value or band need be specified
88	ES-0.4/ 17	12A	This step requires containment access	EOPs ES-0.2, ES-0.3 and ES-0.4 are for non-accident cases. Normal operator training should emphasize what action can be taken if the containment is inaccessible
92	E-1/ 8, 16		Not all samples were requested	Importance of sampling should be emphasized in training
102	E-1	8	Operator skipped step 16	The entire page was skipped. More extensive training on the EOPs and background information will probably avert this problem. The operator will be more aware of proper EOP step flow
119	E-1/ 1		RCP trip criteria is applicable throughout the EOP	Training needs to emphasize EOP steps that are applicable throughout the EOP

CATEGORY B DEVIATIONS (cont.)

DEV. NO.	EOP/ STEP NO.	"S" NO.	DEVIATION	RESOLUTION
11	ES-1.1/ 8	9	Letdown was established before the EOP step directed it based on increasing PRZR level	If the operator has a good understanding of EOP intent, then taking an action before specified in the EOP is allowable just so the action does not adversely affect steps prior to the actual step.
12	ES-1.1	9	Make sure BIT is isolated in ES-1.1	See deviation 5
105	ES-1.2/ 13 RNO	8	Initially missed RNO	More training and greater EOP familiarity should avert this problem
38	E-3/ 2		Identify ruptured SG(s) with additional symptoms such as feed regulating valve position and steam/feed flow mismatch	The EOPs are concerned with post trip information rather then pre-trip information
43	E-3/ 28	6	Operators had difficulty in maintaining RCS and ruptured SG pressures equal when SG and PRZR levels were offscale high. Can heaters be turned off?	If heaters are not secured then increasing RCS pressure will cause rupture flow. This step needs to be trained on in detail to ensure complete operator understanding

CATEGORY B DEVIATIONS (cont.)

DEV. NO.	EOP/ STEP NO.	"S" NO.	DEVIATION	RESOLUTION
44	E-3/ 28b	6	When the PRZR level is offscale high than the use of normal spray is confusing	Operators need to be trained on solid plant pressure control
45	E-3/ 28	6	Decreasing makeup is not clear. Adding "or increase letdown" may reduce confusion	The confusion can be averted if operators are trained to know that decreasing makeup can be accomplished by either reducing charging flow or increasing letdown flow.
46	E-3/ 4	6	Is it wise to feed a ruptured SG until it is in the narrow range. The probability of getting an overfill problem is increased.	A qualified indication of SG inventory is required to prevent tube uncovery. If ruptured SG heaters the narrow range, then AFW flow should be reduced until isolated.
47	E-3/ 19	6	"or's" are confusing	Training must emphasize any steps containing "or's" or prevent misunderstandings
48	E-3/ 14d	6	Add "and stabilize temperature"	This should be emphasized in training

CATEGORY B DEVIATIONS (cont.)

DEV. NO.	EOP/ STEP NO.	"S" NO.	DEVIATION	RESOLUTION
118	E-3/ 16		Missed caution before step 16 which resulted in a transition to ECA-3.1 before the cooldown was complete.	Starting the cooldown as early as possible is important. Therefore, recommend leaving the steps as presently ordered and have this problem discussed in training.
49	ES-3.1/ 3	6	Training should emphasize the need to determine shut-down margin before backfill is commenced.	Training
52	ES-3.3/ 9	6	Intent was to dump steam to 400 psig (below RHR cut-in pressure)	Training
53	ES-3.3/ 11	6	Plant conditions required the use of two PORVs rather than one.	Attributal to a simulator modeling problem
116	ECA-0.0/ 8	11A	The transition from 8a RNO to 8b was not understood	This step was included for Browns Ferry type incident. Cover in Training.

CATEGORY B DEVIATIONS (cont.)

DEV. NO.	EOP/ STEP NO.	"S" NO.	DEVIATION	RESOLUTION
114	ECA-0.0/ 28	11A	The SRO was reluctant to transition to ECA-0.2 based on symptoms requiring an SI (LOCA). He decided to manually actuate SI and return to E-0.	This is a training problem. ECA-0.0 series has the highest priority.
19	ECA-0.1/ 10	11	The supervisor did not inform the operators of the note, however, FRPs were being monitored prior to the note anyway.	Should be emphasized in training.
81	ECA-1.1	10	Evaluate the benefits of eliminating the titles for EOPs when referenced in steps. Title tended to be confusing at times.	As the operators become more familiar with EOPs from training, title problems will probably dissipate.
80 *	ECA-1.1/ 1	10	Consider placing the RCP restart step earlier in this EOP.	Leave step as is until it can be further evaluated as an WOG Maintenance Program submittal. Early RCP restart may cause a loss of inventory or an PCT concern.

CATEGORY B DEVIATIONS (cont.)

DEV. NO.	EOP/ STEP NO.	"S" NO.	DEVIATION	RESOLUTION
83	ECA-1.1/ 17a	10	The RVLIS input caused problems in performing the step.	It appeared that simulator modeling problems were partially at fault. An RVLIS of 60% indicates the core is still covered. Excessive subcooling can reduce vessel level based on coolant losses.
96	ECA-3.1/ 8.b.2)	6A(1)	The VCT valve switch must be held until low level occurs. Also note that this applies to FR-S.1 Step 4.	Step correct as worded.
54	ECA-3.3/ 13 RNO	6B	Place LCV-112B and LCV-112C in automatic.	No change recommended. In auto mode, valve may reopen if VCT is above low level cutoff.
27	FR-S.1/ 1		Auto rod insertion provides a more rapid insertion of rods initially. However, as Tavg approaches the no-load temperature then manual control is faster.	The operators must be trained to take those actions that will shut the reactor down in the shortest time interval. Auto rod insertion followed by manual insertion is a feasible way of doing it.
37	FR-C.3/ 1	6	A problem exists with negative in left-hand column.	The operator will have to be trained to adequately deal with it.

CATEGORY B DEVIATIONS (cont.)

DEV. NO.	EOP/ STEP NO.	"S" NO.	DEVIATION	RESOLUTION
31	FR-H.1/ 10		If an SI occurs during bleed and feed, are proper recovery actions included?	All necessary actions for restoring a heat sink are included.
35	FR-H.1/ 15		Is maximum charging clearly understood by the operators and could plant equipment be damaged if PD pump is started.	No change recommended.
32	FR-H.1/ 23		The operators were very concerned with closing an	This concern should be presented to the WOG maintenance program.
34	FR-H.1		Active monitoring of CSF status trees would have caused an earlier transition to FR-H.1	It appeared that the transition was properly done.
51	FR-H.3/ 8	6	While establishing blowdown the transition was missed in step 7.	This is a problem with operator familiarity of the EOPs.
98	FR-P.1/ 1 RNO	5	Substeps 1c and 1f should be on the same page.	Substep order should be preserved; no change recommended.

CATEGORY B DEVIATIONS (cont.)

DEV. NO.	EOP/ STEP NO.	"S" NO.	DEVIATION	RESOLUTION
108	FR-P.2/ 1d RNO	WT-3	Substep is confusing. The operators would prefer to have the 420 gpm limits before the control feed flow action.	Combine this deviation with deviation 98.
111	FR-P.2/ 4	WT-3	Provide adverse containment cooldown limit curves in "footnote document" and Background document key utility decision points." This comment also applies to FR-P.1.	Information provided.
104	FR-I.3/ 16	8	What does "17 MR" mean?	"7MR" is the proper designation of the breaker #.
14		11	Bus 5A that supplies instrument air must close tie-breaker (similar to CCW step).	
42			Add "start CRDM fans" after RCPs are stopped.	This deviation should be submitted to the WOG Maintenance Program for evaluation.