TECHNICAL EVALUATION REPORT

MASONRY WALL DESIGN (B-59)

CONSOLIDATED EDISON COMPANY

INDIAN POINT UNIT 2

NRC DOCKET NO. 50-247

NRC TAC NO. 42962

NRC CONTRACT NO. NRC-03-81-130

FRC PROJECT C5506

FRC ASSIGNMENT 6

FRC TASK 160

Prepared by

Franklin Research Center
20th and Race Street
Philadelphia, PA 19103

Author: V. N. Con, A. K. Le

FRC Group Leader: V. N. Con

Prepared for

Nuclear Regulatory Commission
Washington, D.C. 20555

Lead NRC Engineer: N. Chokshi

September 8, 1983

Prepared by:	Reviewed by:	Approved by:
Vu Ngoc Con	S. Pandey	Vu Ngoc Con (for Sal Cafagno)
Principal Author	Project Manager	Department Director
Date: 9/8/83	Date: 9/8/83	Date: 9-8-83

Franklin Research Center
A Division of The Franklin Institute
The Benjamin Franklin Parkway, Phila., Pa. 19103 (215) 448-1000

CONTENTS

FOREWORD

This Technical Evaluation Report was prepared by Franklin Research Center under a contract with the U.S. Nuclear Regulatory Commission (Office of Nuclear Reactor Regulation, Division of Operating Reactors) for technical assistance in support of NRC operating reactor licensing actions. The technical evaluation was conducted in accordance with criteria established by the NRC.

1. INTRODUCTION

1.1 PURPOSE OF REVIEW

The purpose of this review is to provide a technical evaluation of the Licensee response to IE Bulletin 80-11 [1] with respect to compliance with the Nuclear Regulatory Commission (NRC) masonry wall criteria. In addition, if the Licensee plans repair work on masonry walls, the planned methods and procedures are reviewed for acceptability.

1.2 GENERIC ISSUE BACKGROUND

In the course of conducting inspections at the Trojan Nuclear Plant, Portland General Electric Company determined that some concrete masonry walls did not have adequate structural strength. Further investigation indicated that the problem resulted from errors in engineering judgment, a lack of established procedures and procedural details, and inadequate design criteria. Because of the implication of similar deficiencies at other operating plants, the NRC issued IE Bulletin 80-11 on May 8, 1980.

IE Bulletin 80-11 required licensees to identify plant masonry walls and their intended functions. Licensees were also required to present reevaluation criteria for the masonry walls with the analyses to justify those criteria. If modifications were proposed, licensees were to state the methods and schedules for the modifications.

1.3 PLANT-SPECIFIC BACKGROUND

In response to IE Bulletin 80-11, Consolidated Edison Company submitted to the NRC a letter with documents regarding masonry wall design at Indian Point Unit 2 [2-5]. Based on the information supplied by the Licensee, the status of masonry walls at Indian Point Unit 2 was reviewed. As a result of the review, a request for additional information was sent to the Licensee on December 22, 1981 [6]. The Licensee responded to this request on February 24, 1982 [7] and again on August 16, 1982 [8]. After review of References 6 and

2. EVALUATION CRITERIA

The basic documents used for guidance in this review were the criteria developed by the Structural and Geotechnical Engineering Branch (SGEB) of the NRC [11] (attached as Appendix A to this report), the Uniform Building Code [12], and ACI 531-79 [13].

In general, the materials, testing, analysis, design, construction, and inspection of safety-related concrete masonry walls should conform to the SGEB criteria [11]. For operating plants, the loads and load combinations for qualifying the masonry walls should conform to the appropriate specifications in the Final Safety Analysis Report (FSAR) for the plant. Allowable stresses are specified in Reference 13 and the appropriate increase factors for abnormal and extreme environmental loads are given in Reference 11.

Response 1

The Licensee stated that the response spectrum method using the normal modes was adopted in the analysis, and this method implicitly includes multimode effects [7]. In a later response [8], it was pointed out that a modal analysis for each wall was performed to extract the first five modes and that the individual modal responses were combined using the square root of the sum of the squares.

The Licensee also indicated that the reference to a factor greater than 1.0 originally introduced in the reevaluation criteria to account for the multimode effects will be deleted from the Licensee's criteria.

For all practical purposes, the contribution of the first five modes should be adequate to represent the total response of each wall. In many cases at other plants, it has been found that the first mode usually contributes 95% or more to the total responses. Therefore, it can be concluded that the Licensee's approach is satisfactory and in compliance with the SGEB criteria.

Request 2

Since the SGEB criteria require that multiple wythe and composite masonry analyses be reviewed on a case-by-case basis, the Licensee should discuss the analytical approach and allowable stresses used for collar joints. With reference to the application of the results of Bechtel's 3/8-in collar joint test, the Licensee should discuss the applicability to Indian Point Unit 2 of the Trojan test cited in the submittal.

Request 1 of Reference 9

The Licensee stated that the brick walls in the control building were constructed as three-wythe units with header courses every sixth course. The Licensee is to identify building codes which allow this type of construction and verify if the wall construction is in compliance with the code

Response 3

The Licensee selected four multi-wythe walls for analysis using both a single-wythe and multi-wythe assumption. A finite element plate analysis was conducted to assess the out-of-plane response using the computer program SAP5A, and the following results were given:

a. The frequency of multi-wythe walls is increased compared to the single-wythe assumption and its frequency falls into the rigid range.

b. For multi-wythe walls, the maximum stress ratio between the calculated and allowable stress is reduced by factors ranging from 3 to 16 and the maximum reduction occurred for walls with equipment loads because the equipment loads were distributed over the greater wall thickness.

The results of analysis of four multi-wythe walls indicated that the single-wythe assumption produced more conservative estimates. As such, the Licensee's approach is technically adequate and in compliance with the SGEB criteria.

Request 4

The Licensee stated that the Final Safety Analysis Report (FSAR) for the plant takes into account a two-direction (vertical and horizontal) earthquake. However, the analysis includes only the horizontal component of motion. SRP Section 3.7.1 requires design response spectra for three directions (one vertical and two orthogonal horizontal directions). The Licensee should explain why the earthquake's vertical component was not considered.

Request 2 of Reference 9

With regard to Response 4, the Licensee stated, "For these reasons the vertical accelerations have not been included explicity in the wall evaluation. Their effects have been considered implicitly and determined to have no detrimental effects on the allowable stresses." The Licensee is to clarify whether vertical accelerations were actually considered in the analysis. If so, provide a sample calculation.

reinforced masonry walls and therefore has been deleted from the revised criteria [8].

The Licensee's response has resolved this concern.

Request 6

The Licensee should provide details for References 25 and 26, which are cited but not included in the submitted documents.

Response 6

The Licensee provided References 25 and 26, which are cited in the original submittal [4] but not included in the reference list. These references are as follows:

25. Levingston, A. R., Mangolich, E., and Dikkers, R., "Flexural Strength of Hollow Unit Concrete Masonry Walls in the Horizontal Span," Technical Report No. 62, NEMA, 1958.

26. Cox, F. W., and Ennenga, J. L., "Transverse Strength of Concrete Block Walls," Proceedings ACI, Vol. 54, p. 951, 1958.

Request 7

The Licensee should justify the proposed 67% increase in gross shear strains for factored loads.

Response 7

The Licensee used the results from test programs performed at the Earthquake Engineering Research Center, University of California, Berkeley to justify the proposed 67% increase in gross shear strains due to in-plane interstory drift effects for factored loads.

Regarding the applicability of these tests to the masonry walls in the plant, the following information was presented:

a. Loading

Although a seismic time history was not applied to the test walls, cyclic loading used in these tests should be appropriate to study the structural performance of the walls subject to a reversed load type.

Licensee's allowable strain of 0.0008 for an operating basis earthquake (OBE) event ranges from 2.15 to 2.90 and based on the allowable strain of 0.0017 for a safe shutdown earthquake (SSE) event ranges from 2.13 to 2.61.

It should be noted that even though the SGEB criteria do not specify the allowable strains, the values used by the Licensee are reasonably small. In addition, the results above demonstrate that a significant margin of safety associated with the Licensee's allowable strains exists in both OBE and SSE cases. Furthermore, the ratio of calculated and allowable strain for the applicable walls is significantly smaller than 1 (the maximum is 0.064). Therefore, it is concluded that the Licensee's response is adequate and satisfactory.

Request 8

The Licensee should justify the proposed 33-1/3% increase in bond stress for factored loads.

Response 8

The Licensee stated that the one-third increase for bond stress was specified for reinforced walls. However, the walls at the plant are not reinforced. Hence, the increase factor was not actually used and has been deleted from the Licensee's criteria [8]. This response has resolved the concern.

Request 9

The Licensee should justify using $E = 1200\ f'_m$ instead of the ACI Code value, $E = 1000\ f'_m$.

Response 9

Regarding the evaluation of the fundamental frequency of the wall, the uncertainties due to variations in mass, material, and section properties were accounted for by selecting $1000\ f'_m$ as the modulus of elasticity with a

Based on the information provided above, it is believed that the condition of the wall is good and assumptions concerning the material properties used in the analysis are considered satisfactory. Therefore, it is concluded that the Licensee's allowable stresses could be considered to belong to the special inspection category and in compliance with the SGEB criteria.

Request 11

The Licensee should explain the applicability of several test results presented in Reference 2 to the masonry structure at Indian Point Unit 2 with specific reference to the type of mortar, the actual boundary conditions, and the dynamic nature of the loading. The following deviations from SGEB criteria are observed in the Licensee's criteria for allowable stresses applied to factored loads and should be justified by the Licensee:

a. For factored loads, the Licensee suggests a 67% increase in allowable stresses for tension parallel to and perpendicular to the bed joint. However, the SGEB criteria allow only 50% and 30% increases, respectively.

b. The Licensee suggests a 67 to 70% increase in the allowable shear for both masonry and reinforcement for factored loads. In the corresponding SGEB criteria, increases for factored loads are 30% for the masonry and 50% for the reinforcement.

Response 11

a. Regarding the applicability of test data, the following information was noted based on the Licensee's response:

   - In general, the tests with mortar similar to that used at Indian Point Unit 2 are selected for statistical analysis.

   - The walls tested have similar boundary conditions as compared to the walls at the plant.

   - Even though the tests are static and monotonic, it is noted that an unreinforced wall should exhibit an elastic response to seismic loads provided it is not cracked. Furthermore, there are no test results indicating that the dynamic loading would reduce the tensile strength normal to the bed joint.

   Information regarding the tension parallel and normal to bed joint is given below.

a. The Licensee has outlined certain alternative acceptance criteria to be used when the allowable stresses for unreinforced masonry are exceeded. These are based on the "arching theory for masonry walls." The Licensee is advised not to use such criteria in the absence of conclusive evidence of their validity as applied to masonry structures.

b. For walls spanning between two floors, the Licensee is advised to use the envelope of the response spectra for the two floors and not their average, as indicated in Section 6.2 of Attachment 1.

c. It is recommended that the Licensee follow Standard Review Plan (SRP) Section 3.7.2 and use a factor of 1.5 times the peak floor acceleration to multiply the weight of the equipment, or provide proper justification if a different factor is used.

Response 12

a. The "arching theory" was not used and will be deleted from the Licensee's criteria.

b. For walls spanning between two floors, the Licensee agreed not to use the average of the floor response spectra. Instead, the envelope of the floor response spectra was used.

c. The Licensee stated that all attached equipment at Indian Point Unit 2 is rigid and its effects were considered using added mass in the wall models. With reference to Response 1, it was indicated that a response spectrum analysis method was used and that the multimode effects were included in the analysis. Therefore, the recommended factor of 1.5 is not applicable.

The Licensee's response is satisfactory and in compliance with the SGEB criteria.

Request 13

The Licensee should supply the following:

a. Either the final reevaluaton of masonry walls mentioned in Reference 2 or a schedule for when it will be submitted.

b. Information on the method and schedule of any planned modification of masonry walls.

4. CONCLUSIONS

A detailed study was performed to provide a technical evaluation of the masonry walls at Indian Point Unit 2. Review of the Licensee's criteria and additional information provided by the Licensee led to the conclusions given below.

The criteria used for reevaluation of the masonry walls, along with the additional information provided by the Licensee, indicate that the Licensee's criteria are in compliance with the SGEB criteria [11], except for the stress increase factor for tension normal to the bed joint. However, as previously identified in Response 11 of Section 3.1, only two walls required a factor greater than 1.3 (SGEB criteria). These factors were 12% and 16% higher than the SGEB allowable. The Licensee, however, used conservative damping values (2% for OBE and 5% for DBE as opposed to 4% and 7%). A conservative approach was used to evaluate the wall's fundamental frequency (see Response 9). In addition, the specified minimum strengths for the material properties were used in the analysis. This circumstance warrants some relaxation of the allowable stresses.

Reference 8 indicated that the wall modifications will assure that stresses are maintained within the stress limits established by the reevaluation criteria. In view of this, the Licensee's approach to wall modifications is considered adequate and satisfactory.

10. J. D. O'Toole (Consolidated Edison)
Letter to S. A. Varga (NRC)
Subject: Additional Information Concerning IE Bulletin 80-11
"Masonry Wall Design"
June 30, 1983

11. SGEB Criteria for Safety-Related Masonry Wall Evaluation
Developed by the Structural Engineering Branch (SGEB) of the NRC
July 1981

12. Uniform Building Code
International Conference of Building Officials, 1979

13. ACI 531-79 and Commentary ACI 531-R-79 "Building Code Requirements for Concrete Masonry Structures"
American Concrete Institute, 1979

14. Tentative Provisions for the Development of Seismic Regulations for Buildings
Applied Technology Council
ATC-3-06

APPENDIX A

SGEB CRITERIA FOR SAFETY-RELATED MASONRY WALL EVALUATION (DEVELOPED BY THE STRUCTURAL AND GEOTECHNICAL ENGINEERING BRANCH [SGEB] OF THE NRC)

Franklin Research Center
A Division of The Franklin Institute
The Benjamin Franklin Parkway, Phila., Pa. 19103 (215) 448-1000

CONTENTS

1. General Requirements

The materials, testing, analysis, design, construction, and inspection related to the design and construction of safety-related concrete masonry walls should conform to the applicable requirements contained in Uniform Building Code - 1979, unless specified otherwise, by the provisions in this criteria.

The use of other standards or codes, such as ACI-531, ATC-3, or NCMA, is also acceptable. However, when the provisions of these codes are less conservative than the corresponding provisions of the criteria, their use should be justified on a case-by-case basis.

In new construction, no unreinforced masonry walls will be permitted. For operating plants, existing unreinforced walls will be evaluated by the provisions of these criteria. Plants which are applying for an operating license and which have already built unreinforced masonry walls will be evaluated on a case-by-case basis.

2. Loads and Load Combinations

The loads and load combinations shall include consideration of normal loads, severe environmental loads, extreme environmental loads, and abnormal loads. Specifically, for operating plants, the load combinations provided in the plant's FSAR shall govern. For operating license applications, the following load combinations shall apply (for definition of load terms, see SRP Section 3.8.4II-3).

(a) Service Load Conditions

(1) $D + L$

(2) $D + L + E$

(3) $D + L + W$

If thermal stresses due to T_o and R_o are present, they should be included in the above combinations as follows:

(1a) $D + L + T_o + R_o$

(2a) $D + L + T_o + R_o + E$

(3a) $D + L + T_o + R_o + W$

Check load combination for controlling condition for maximum 'L' and for no 'L'.

Type of Stress	Factor
Axial or Flexural Compression[1]	2.5
Bearing	2.5
Reinforcement stress except shear	2.0 but not to exceed 0.9 fy
Shear reinforcement and/or bolts	1.5
Masonry tension parallel to bed joint	1.5
Shear carried by masonry	1.3
Masonry tension perpendicular to bed joint	
for reinforced masonry	0
for unreinforced masonry[2]	1.3

Notes

(1) When anchor bolts are used, design should prevent facial spalling of masonry unit.

(2) See 3(c).

4. Design and Analysis Considerations

(a) The analysis should follow established principles of engineering mechanics and take into account sound engineering practices.

(b) Assumptions and modeling techniques used shall give proper considerations to boundary conditions, cracking of sections, if any, and the dynamic behavior of masonry walls.

(c) Damping values to be used for dynamic analysis shall be those for reinforced concrete given in Regulatory Guide 1.61.

(d) In general, for operating plants, the seismic analysis and Category I structural requirements of FSAR shall apply. For other plants, corresponding SRP requirements shall apply. The seismic analysis shall account for the variations and uncertainties in mass, materials, and other pertinent parameters used.

(e) The analysis should consider both in-plane and out-of-plane loads.

(f) Interstory drift effects should be considered.

APPENDIX B

FLOOR PLANS IDENTIFYING WALL LOCATIONS AND CONFIGURATION

FLOOR PLANS IDENTIFYING MASONRY WALL LOCATIONS AND CONFIGURATION

List of Drawings

DRAWING NUMBER	BUILDING	ELEVATION
547-81	FAN HOUSE	88'-0"
547-82	BORIC ACID	81'-8" and 91'-8"
547-83	FUEL STORAGE	80'-0"
547-84	CONTROL	15'-0"
547-85	CONTROL	33'-0"
547-86	CONTROL	53'-0"
547-87	PRIMARY AUXILIARY	80'-0" and 98'-0"

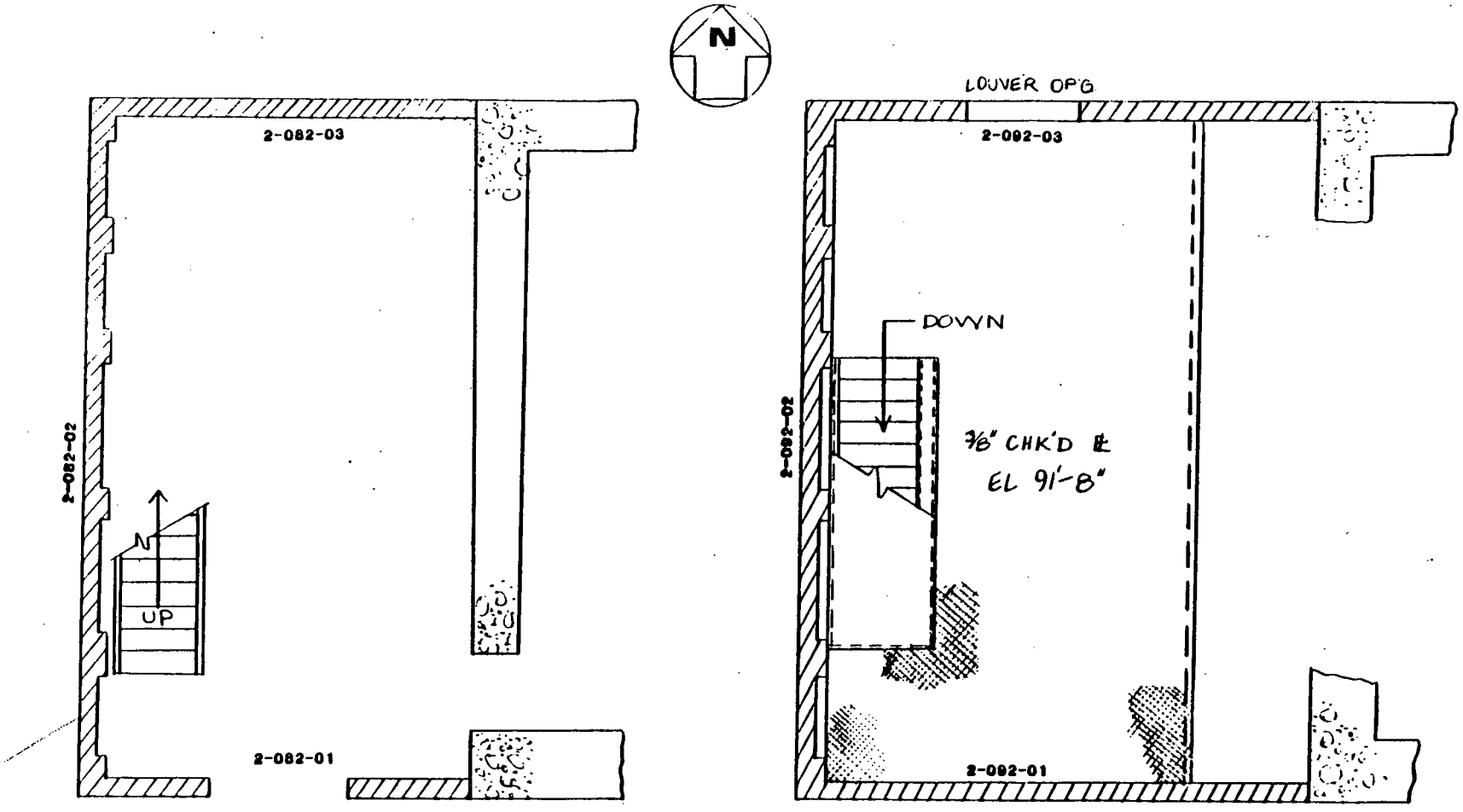

FLOOR PLANS

Boric Acid Building

CONSOLIDATED EDISON CO. New York, NY		
SCALE: 1/4" = 1'-0"	APPROVED BY:	DRAWN BY OD
DATE:		REVISED
INDIAN POINT GENERATING STATION, UNIT 2 BORIC ACID BUILDING (02) -MASONRY WALL KEY PLAN		
COMPUTECH engineering services inc Berkeley, CA		DRAWING NUMBER 547-B2

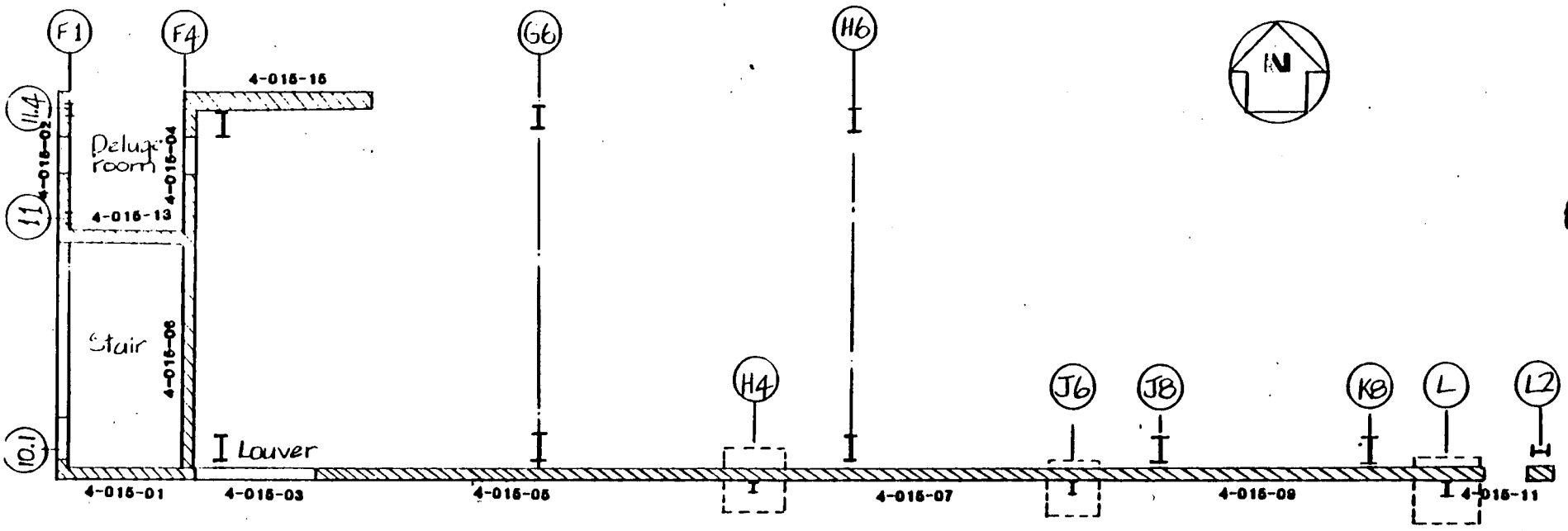

FLOOR PLAN EL. 15'-0"

Control Building

CONSOLIDATED EDISON CO. New York, NY		
SCALE: 1/8" = 1'-0"	APPROVED BY:	DRAWN BY O.D.
DATE: 5/81		REVISED
INDIAN POINT GENERATING STATION, UNIT 2		
CONTROL BUILDING (04) - MASONRY WALL KEY PLAN		
COMPUTECH engineering services inc Berkeley, CA		DRAWING NUMBER 547-B4

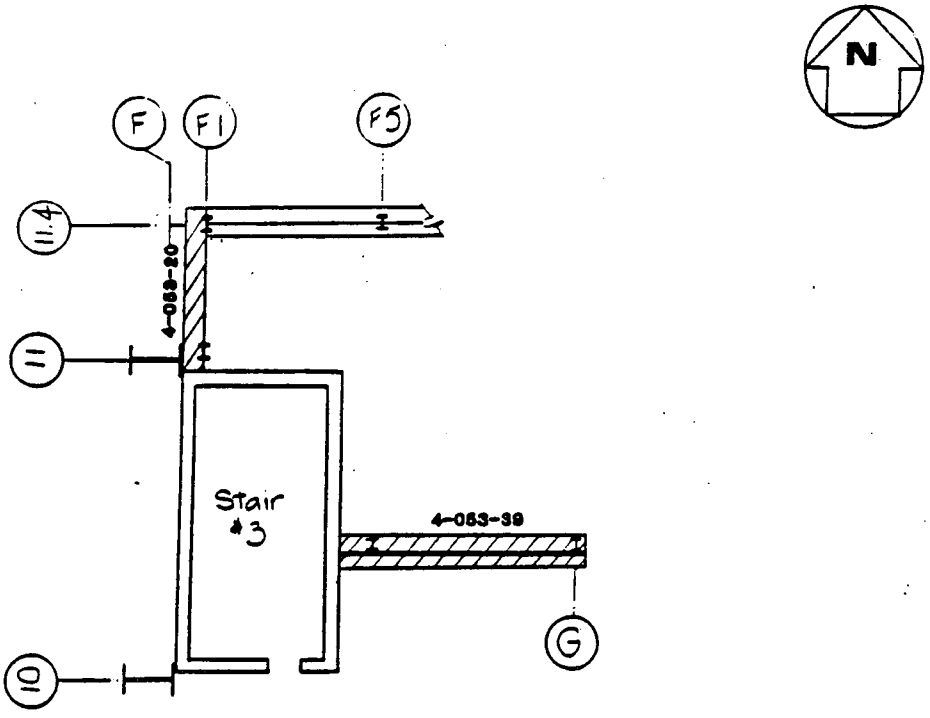

FLOOR PLAN EL 53'-0"

Control Building

CONSOLIDATED EDISON CO. New York, NY		
SCALE: 1/8" = 1'-0"	APPROVED BY:	DRAWN BY Q.D.
DATE: 5/81		REVISED
INDIAN POINT GENERATING STATION, UNIT 2 CONTROL BUILDING (04) - MASONRY WALL KEY PLAN		
COMPUTECH engineering services inc Berkeley, CA		DRAWING NUMBER 547-86