EGG-EA-5307, REV. 1

SEPTEMBER 1982

ADEQUACY OF STATION ELECTRIC DISTRIBUTION SYSTEM VOLTAGES, INDIAN POINT NUCLEAR STATION, UNIT NO. 2

A. C. Udy
D. A. Weber

Idaho National Engineering Laboratory
Operated by the U.S. Department of Energy

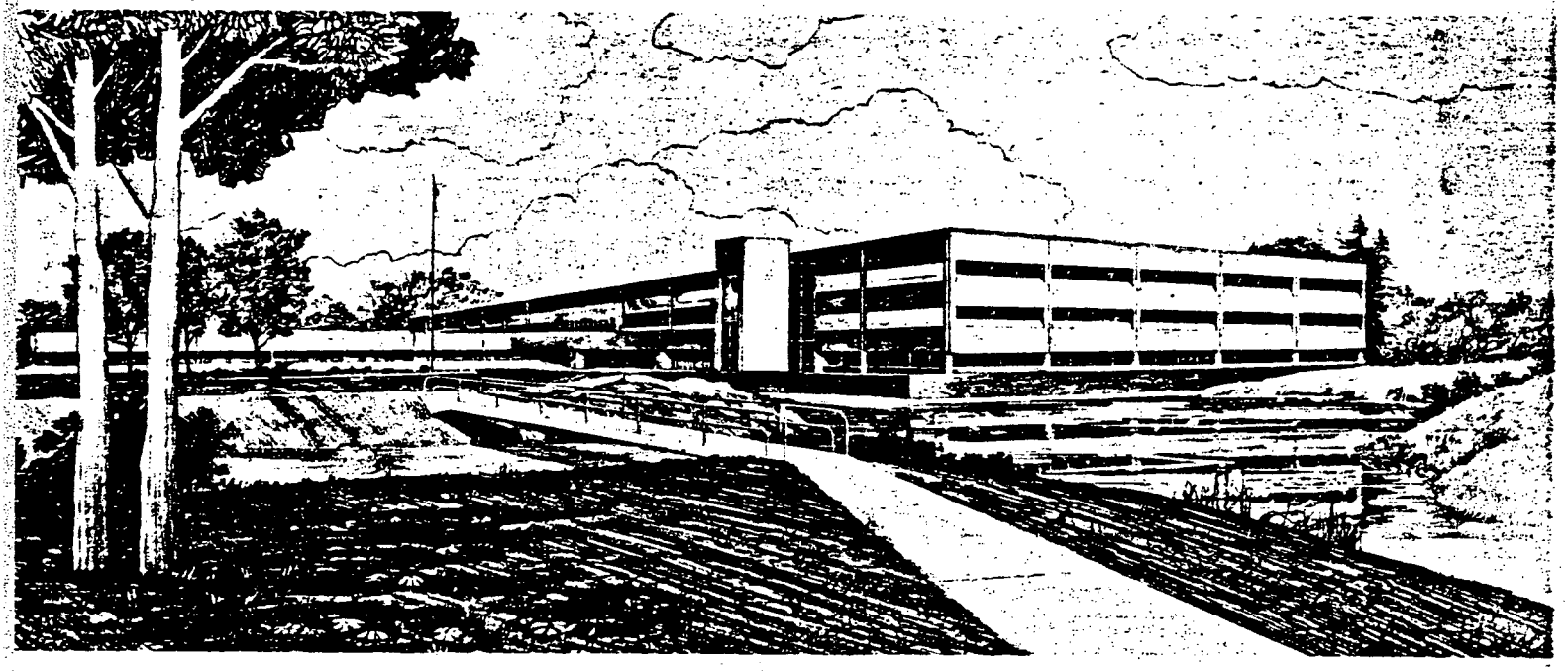

This is an informal report intended for use as a preliminary or working document

Prepared for the
U.S. NUCLEAR REGULATORY COMMISSION
Under DOE Contract No. DE-AC07-76ID01570
FIN No. A6429

EG&G Idaho

8210280432 821018
PDR ADOCK 05000247
P PDR

EG&G Idaho, Inc.

FORM EG&G-398
(Rev. 03-82)

Accession No. _____

Report No. EGG-EA-5307, Rev. 1

Contract Program or Project Title:

Selected Operating Reactors Issues

Subject of this Document:

Adequacy of Station Electric Distribution System Voltages, Indian Point Nuclear Station, Unit No. 2

Type of Document:

Letter Report

Author(s):

A. C. Udy
D. A. Weber

Date of Document:

September 1982

Responsible NRC Individual and NRC Office or Division:

R. L. Prevatte, Division of Systems Integration

EG&G Idaho, Inc.
Idaho Falls, Idaho 83415

Prepared for the
U.S. Nuclear Regulatory Commission
Washington, D.C.
Under DOE Contract No. DE-AC07-76ID01570
NRC FIN No. A6429

ADEQUACY OF STATION ELECTRIC DISTRIBUTION SYSTEM VOLTAGES

INDIAN POINT NUCLEAR STATION, UNIT NO. 2

September 1982

A. C. Udy
D. A. Weber
Reliability and Statistics Branch
Engineering Analysis Division
EG&G Idaho, Inc.

Docket No. 50-247
TAC No. 12992

ABSTRACT

This EG&G Idaho, Inc. report reviews the capacity and the capability of the onsite power distribution system at Unit No. 2 of the Indian Point Nuclear Station, in conjunction with the offsite power sources, to automatically start and continuously operate all required safety-related loads.

FOREWORD

This report is supplied as part of the "Selected Operating Reactors Issues" being conducted for the U.S. Nuclear Regulatory Commission, Office of Nuclear Reactor Regulation, Division of Licensing, by EG&G Idaho, Inc., Reliability and Statistics Branch.

The U.S. Nuclear Regulatory Commission funded the work under the authorization B&R 20 19 10 11.

CONTENTS

ABSTRACT ii

FOREWORD ii

1.0 INTRODUCTION 1

2.0 DESIGN BASIS CRITERIA 1

3.0 SYSTEM DESCRIPTION 2

4.0 ANALYSIS DESCRIPTION 4

4.1 Operation Changes 4
4.2 Analysis Conditions 4
4.3 Analysis Results 6
4.4 Analysis Verification 6

5.0 EVALUATION 7

6.0 CONCLUSIONS 8

7.0 REFERENCES 10

FIGURE

1. Indian Point electrical single-line diagram 3

TABLE

1. Class 1E Equipment Voltage Ratings and Analyzed Worst Case Terminal Voltages 5

ADEQUACY OF STATION ELECTRIC DISTRIBUTION SYSTEM VOLTAGES

INDIAN POINT NUCLEAR STATION, UNIT NO. 2

1.0 INTRODUCTION

An event at the Arkansas Nuclear One station on September 16, 1978, is described in NRC IE Information Notice No. 79-04. As a result of this event, station conformance to General Design Criteria (GDC) 17 is being questioned at all nuclear power stations. The NRC, in the generic letter of August 8, 1979, "Adequacy of Station Electric Distribution Systems Voltages,"[1] required each licensee to confirm, by analysis, the adequacy of the voltage at the Class 1E loads. This letter included 13 specific guidelines to be followed in determining if the load terminal voltage is adequate to start and continuously operate the Class 1E loads.

In response to the NRC generic letter, Consolidated Edison Company of New York (Con Ed) submitted a voltage analysis on April 28, 1980.[3] This review is based on this submittal, Con Ed's submittals of October 16, 1979,[2] August 1, 1980,[4] a telecon on January 16, 1981,[5] and the Final Safety Analysis Report (FSAR) for Unit 2. The results of the analysis verification testing was submitted on July 9, 1982,[6] and discussed by telephone on September 2, 1982.[7]

Based on the information supplied by Con Ed, this report addresses the capacity and capability of the onsite distribution system of Unit 2 of the Indian Point Nuclear Station, in conjunction with the offsite power system, to maintain the voltage for the required Class 1E equipment within acceptable limits for the worst-case starting and load conditions.

2.0 DESIGN BASIS CRITERIA

The positions applied in determining the acceptability of the offsite voltage conditions in supplying power to the Class 1E equipment are derived from the following:

1. General Design Criterion 17 (GDC 17), Electric Power Systems, of Appendix A, General Design Criteria for Nuclear Power Plants, of 10 CFR 50.

2. General Design Criterion 5 (GDC 5), Sharing of Structures, Systems, and Components, of Appendix A, General Design Criteria for Nuclear Power Plants, of 10 CFR 50.

3. General Design Criterion 13 (GDC 13), Instrumentation and Control, of Appendix A, General Design Criteria for Nuclear Power Plants, of 10 CFR 50.

4. IEEE Standard 308-1974, IEEE Standard Criteria for Class 1E Power Systems for Nuclear Power Generating Stations.

5. Staff positions as detailed in a letter sent to the licensee, dated August 8, 1979.[1]

6. ANSI C84.1-1977, Voltage Ratings for Electric Power Systems and Equipment (60 Hz).

Six review positions have been established from the NRC analysis guidelines[1] and the above-listed documents. These positions are stated in Section 5.0.

3.0 SYSTEM DESCRIPTION

A single-line diagram of the AC electrical system at Indian Point 2 is shown in Figure 1.

During normal operation, the 6.9kV buses 1, 2, 3, and 4 and the 480V IE buses 2A and 3A are supplied from the 22kV Unit Auxiliary Transformer (UAT). The 6.9kV buses 5 and 6 and the 480V buses 5A and 6A are supplied from the 138kV normal offsite source via the Station Auxiliary Transformer (SAT). The 6.9kV and 480V buses normally supplied from the UAT will automatically fast transfer to the SAT should the reactor or turbine trip.

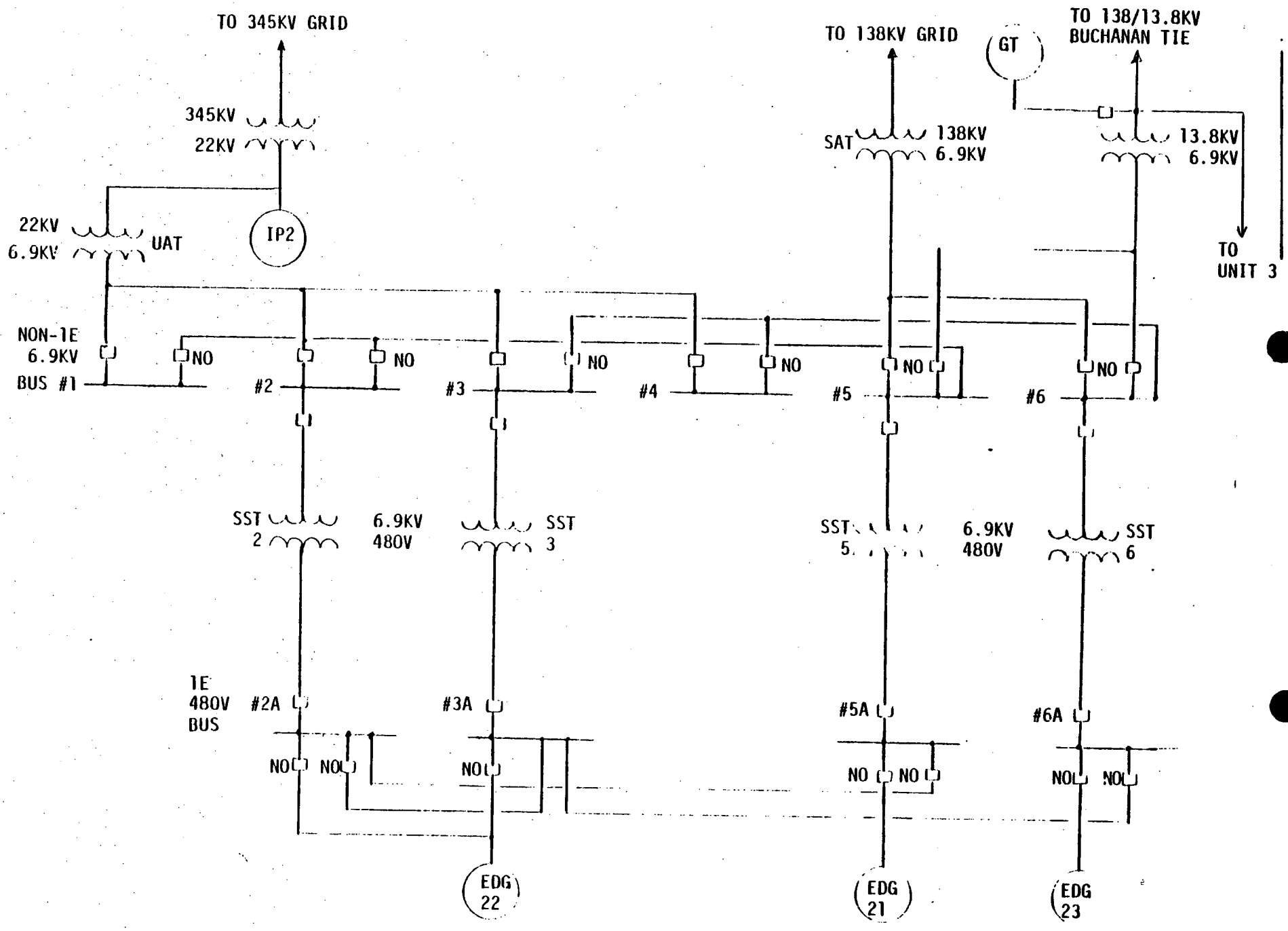

FIGURE 1. INDIAN POINT UNIT 2 ONE-LINE

In addition to the 138kV normal offsite source, the loads on the 6.9kV buses 5 and 6 and IE buses 5A and 6A can be supplied from the 138/13.8kV Buchanan tie via the 13.8/6.9kV transformer.

The technical specifications require the Class 1E 480V bus ties to be open when Unit 2 is operating.

The Class 1E 480V buses supply two battery chargers and four instrumentation buses in addition to their normal load. The two battery chargers maintain voltage on the two 125V DC battery systems in addition to supplying the normal DC loads. Two of the instrumentation buses are energized through constant voltage transformers and the other through station interties.

4.0 ANALYSIS DESCRIPTION

4.1 Operation Changes

The voltages shown in Table 1 are based on the following licensee action:

When the 13.8/6.9kV transformer is supplying the 6.9kV buses 5 and 6, the fast transfer of buses 1, 2, 3, and 4 from the 138kV source to the 13.8kV source will be prevented by "locking out" and tagging the circuit breaker control switches in the control room.[5]

4.2 Analysis Conditions

Con Ed has determined by load flow analysis that the maximum expected offsite grid voltage is 145.7kV for the 138kV system and the minimum is 13.7kV for the 13.8kV system.

Con Ed has analyzed two offsite sources (the 138kV and the 13.8kV sources) to the onsite distribution system under extremes of load and

TABLE 1. CLASS 1E EQUIPMENT VOLTAGE RATINGS AND ANALYZED WORST CASE TERMINAL VOLTAGES (% of nominal voltage)

		Maximum[a]		Minimum[b]		
					Analyzed	
Equipment	Condition	Rated	Analyzed	Rated	Steady State	Transient
440V Motors	Start	--	--	80		80.45[c]
	Operate	110	112[d]	90	92.7	--
460V Motors	Start	--	--	80		87.3[c]
	Operate	110	107	90	94.1	--
480V Starters	Pickup	--	--	80[e]	--	--
	Dropout	--	--	70[e]	--	--
	Operate	110	103	90	90.2	--
Other Equipment[f]						

a. 138kV source: maximum analyzed = 105.6%.

b. 13.8kV source: minimum analyzed = 99.27%.

c. These values are for individual 440V and 460V motors with the lowest starting voltage under conditions of minimum grid and bus voltage.[3]

d. This is for a no load condition. As load is added to the station buses, the voltage will drop to acceptable levels.

e. Testing of a typical starter showed that it would pick up at 78% and drop out at 49%.[7]

f. Analyzed voltages are within the operating range of the 480V battery chargers. Instrument buses are supplied by inverters from 125V batteries and are unaffected by any offsite occurrences.[4]

offsite voltage conditions to determine the terminal voltages to Class 1E equipment. The worst case Class 1E equipment terminal voltages occur under the following conditions:

1. The maximum voltage occurs when the offsite 138kV grid is at its maximum expected value of 145.7kV and no load on the station buses.

2. The minimum voltage occurs when the offsite 13.8kV system is at its minimum expected value of 13.7kV; the 13.8/6.9kV transformer is supplying 6.9kV buses 2, 3, 5, and 6, and 480V buses 2A, 3A, 5A, and 6A; and all IE loads are in operation.

3. The worst case transient voltages occur when starting the 900 hp Circulating Water Pump and the 13.8kV system is at its minimum value and supplying maximum loads.

4.3 Analysis Result

Table 1 shows the projected worst case Class 1E equipment terminal voltages based on the action requirements in Section 4.1.

4.4 Analysis Verification

The voltage analysis was verified by measuring the voltage at the grid and at two 480V Class 1E buses and at two 480V Class 1E Motor Control Centers (MCC). This was done with the unit at full power, with normal operating unit loads on the Class 1E buses and MCCs. An analysis was done using the measured grid voltage and loads. The accuracy of the licensee's analysis was verified by comparing the results of this analysis with the test data.

Comparison of the measured and the analyzed voltages shows that the difference between the two values is less than 0.4%. This close correlation verifies the accuracy of the analysis.

5.0 EVALUATION

Six review positions have been established from the NRC analysis guidelines[1] and the documents listed in Section 2.0 of this report. Each review position is stated below followed by an evaluation of the licensee submittals. The evaluations are based on completion of changes described in Section 4.1.

Position 1--With the minimum expected offsite grid voltage and maximum load condition, each offsite source and distribution system connection combination must be capable of starting and of continuously operating all Class 1E equipment within the equipment voltage ratings.

Con Ed has shown, by analysis, that the 138kV and 13.8kV systems have sufficient capability and capacity for starting and continuously operating the Class 1E loads of Unit 2 within the equipment voltage ratings (Table 1).

Position 2--With the maximum expected offsite grid voltage and minimum load condition, each offsite source and distribution system connection combination must be capable of continuously operating the required Class 1E equipment without exceeding the equipment voltage ratings.

Con Ed has shown, by analysis, that the voltage ratings of the Class 1E equipment will not be exceeded.

Position 3--Loss of offsite power to either of the redundant Class 1E distribution systems due to operation of voltage protection relays must not occur when the offsite power source is within expected voltage limits.

EG&G Idaho, Inc., will verify, in a separate report, that the requirements of this position are satisfied (TAC No. 10028).

Position 4--The NRC letter[1] requires that test results verify the accuracy of the voltage analyses supplied.

Con Ed has verified the accuracy of the voltage analyses..

Position 5--No event or condition should result in the simultaneous or consequential loss of both required circuits from the offsite power network to the onsite distribution system (GDC 17).

Con Ed has analyzed the 138kV and 13.8kV connections to the offsite power grid, and determined that no potential exists for simultaneous or consequential loss of both circuits from the offsite grid.

Position 6--As required by GDC 5, each offsite source shared between units in a multi-unit station must be capable of supplying adequate starting and operating voltage for all required Class 1E loads with an accident in one unit and an orderly shutdown and cooldown in the remaining units.

Indian Point is the site of two operating nuclear units. The preferred (138kV) and alternate (13.8kV) offsite sources are connected independently to the onsite distribution system of each unit. No common electrical connection exists between units; therefore, this position does not apply to the Indian Point Nuclear Station.

6.0 CONCLUSIONS

The voltage analyses submitted by Con Ed for Unit No. 2 of the Indian Point Nuclear Station were evaluated in Section 5.0 of this report. With the procedure described in Section 4.1, it is found that:

1. Voltages within the operating limits of the Class 1E equipment of Unit 2 are supplied for all projected combinations of plant load and normal offsite power grid conditions; including an accident in one unit and the safe shutdown of the other unit.

2. The licensee has performed a test that verifies the accuracy of the analysis.

3. Con Ed has determined that no potential exists for either a simultaneous or a consequential loss of both offsite power sources.

EG&G Idaho, Inc., is performing a separate review of the undervoltage relay protection at the Indian Point Nuclear Station. This will evaluate the relay setpoints and time delays to determine that spurious tripping of the Class 1E buses will not occur with normal offsite source voltages.

7.0 REFERENCES

1. NRC letter, William Gammill, to All Power Reactor Licensees (Except Humboldt Bay), "Adequacy of Station Electric Distribution Systems Voltage," August 8, 1979.

2. Con Ed letter, W. J. Cahill, Jr. to W. Gammill, NRC, October 16, 1979.

3. Con Ed letter, W. J. Cahill, Jr. to Director of Nuclear Reactor Regulation, NRC, April 28, 1980.

4. Con Ed letter, P. Zarakas to Director of Nuclear Regulation, August 1, 1980.

5. Telecon, L. Olshan, NRC, D. Weber, EG&G Idaho, Inc., M. Scott and P. Szabados, Con Ed, January 16, 1981.

6. Con Ed Letter, J. D. O'Toole to Director of Nuclear Reactor Regulation, NRC, July 9, 1982.

7. Telecon, A. Udy, EG&G Idaho, Inc., M. Scott, P. Szabados, T. Wong and P. Doggon, Con Ed, September 2, 1982.