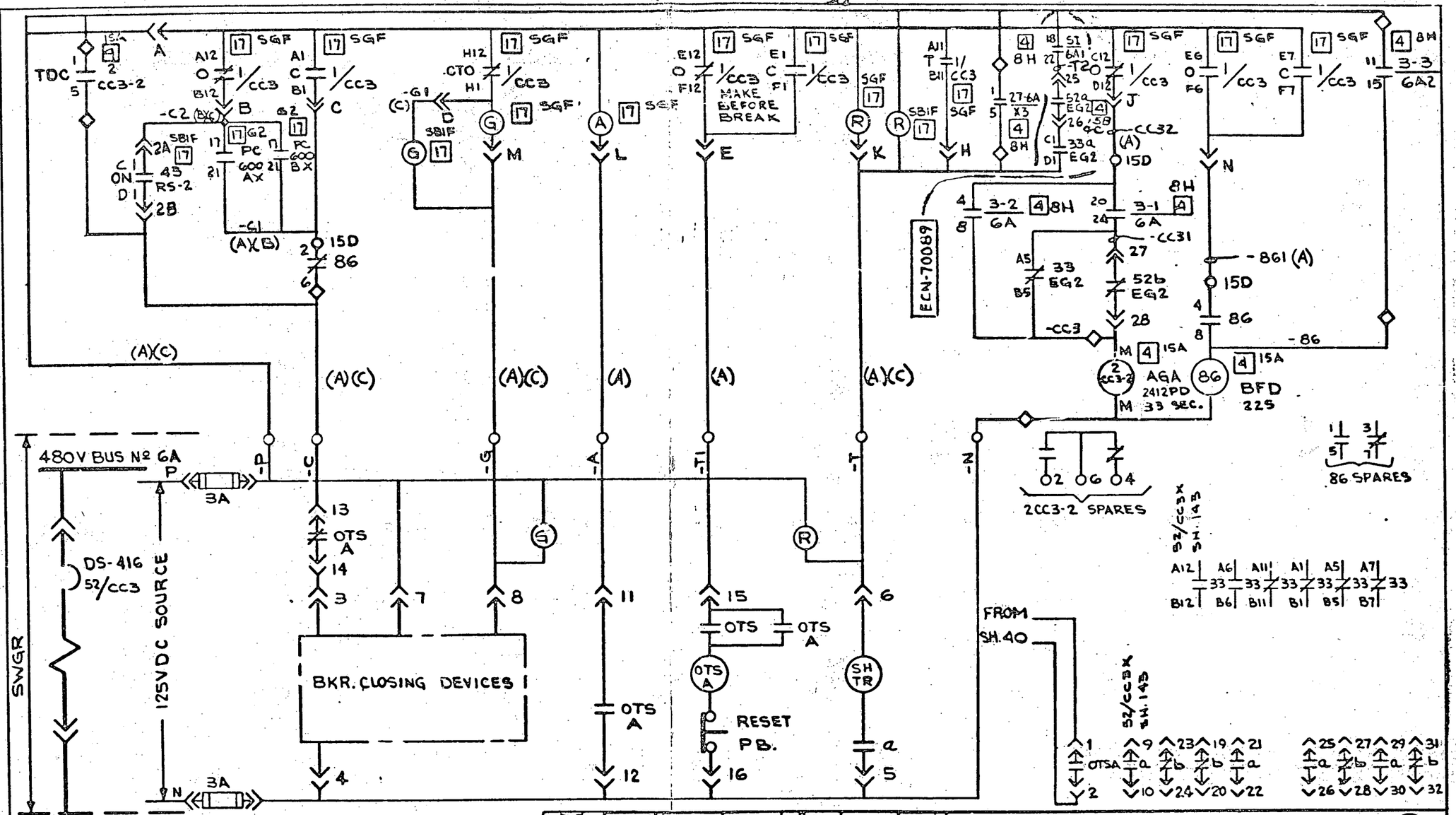

NOTES:

1. WIRE DESIG. PREFIXED WITH 15D
2. 1/CC3 SW. DEV. SH. 9
3. 49/RS-2 SW. DEV. SH. 14
4. ◇ SHOP WIRED
5. LETTER (A) REFERS TO CABLE SCHEMATIC DWG. 9321-LL-31183 SH. 41A

ECN-30407 P. HEARN 7-31-74 8-6-74 8-8-74	ECN-9750 W.C.D. 5-9-73 5-9-73 5-9-73	ECN-9678 W.C.D. 3-6-73 3-19-73 3-26-73	ECN-6087 T.A. 3-31-71 3-31-71 9-2-71	ECN-6087 NEARS 12/24/70 1/4/71 1/5/71	ECN-6087 12-8-70 12-8-70 12-8-70	S.O. INT.-385
7		5	4	3	2	

Westinghouse Electric Corporation

TITLE: CONSOLIDATED EDISON CO.
INDIAN POINT STATION - UNIT NO. 3

ELEMENTARY WIRING DIAG. — COMPONENT COOLING PUMP 33

Wm Solbig 10/4/70 — 10-27-70 — 10-27-70

500B971

SHEET- 46

NUCLEAR ENERGY SYSTEMS — PITTSBURGH, PA., U.S.A.

811070431

811070431