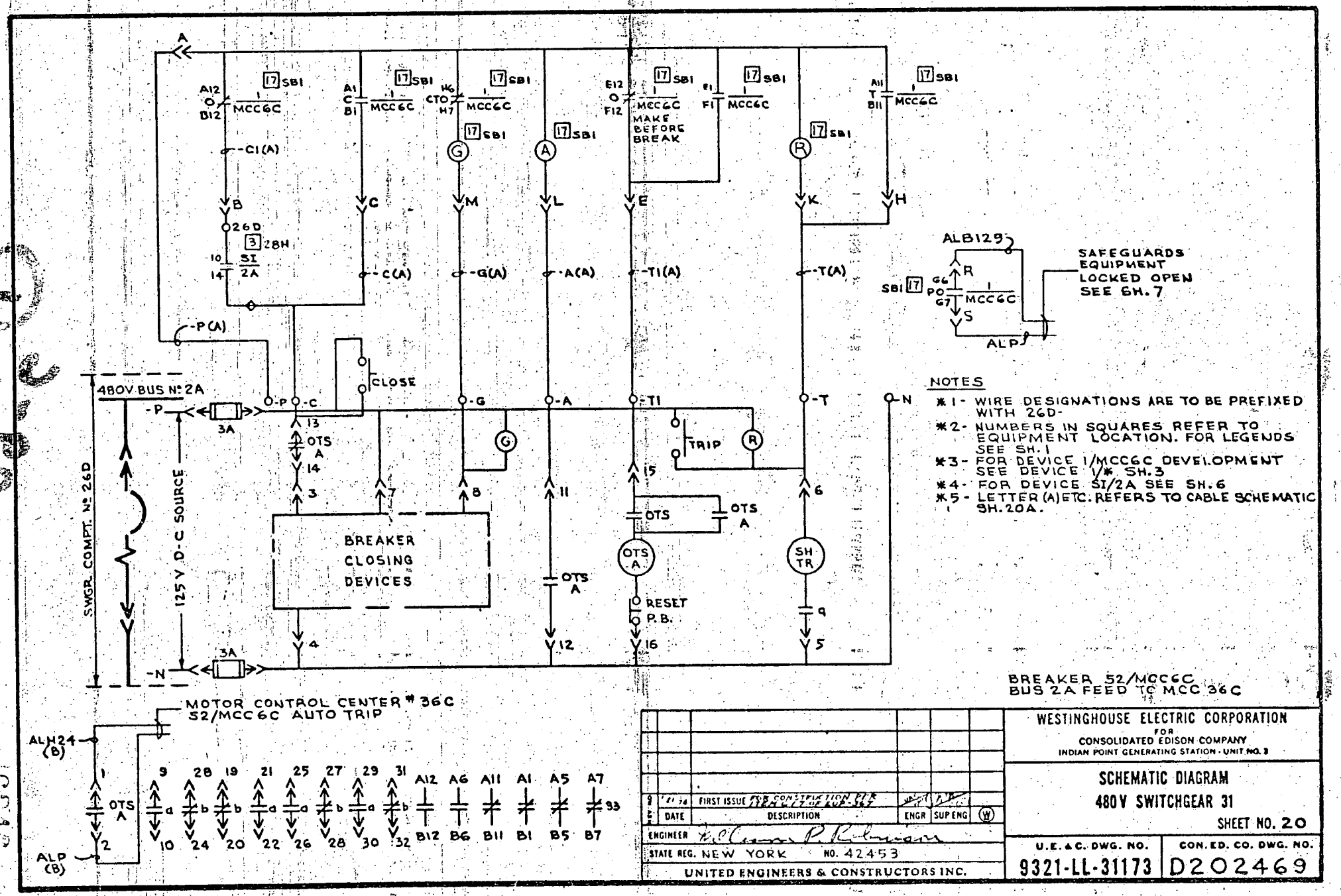

9	'61 '74	FIRST ISSUE FOR CONSTRUCTION PER ITEM 61 OF ECP-367			
8	DATE	DESCRIPTION	ENGR	SUP ENG	W

ENGINEER R. C. Cross P. R. Lemon

STATE REG. NEW YORK NO. 42453

UNITED ENGINEERS & CONSTRUCTORS INC.

WESTINGHOUSE ELECTRIC CORPORATION
FOR
CONSOLIDATED EDISON COMPANY
INDIAN POINT GENERATING STATION - UNIT NO. 3

SCHEMATIC DIAGRAM
480V SWITCHGEAR 31

SHEET NO. 20

U.E.&C. DWG. NO.	CON. ED. CO. DWG. NO.
9321-LL-31173	D202469

8111030097

RECEIVED
JUL 10 1974
U.S. Atomic Energy Commission
Regulatory
Mail Section

29-6 ①