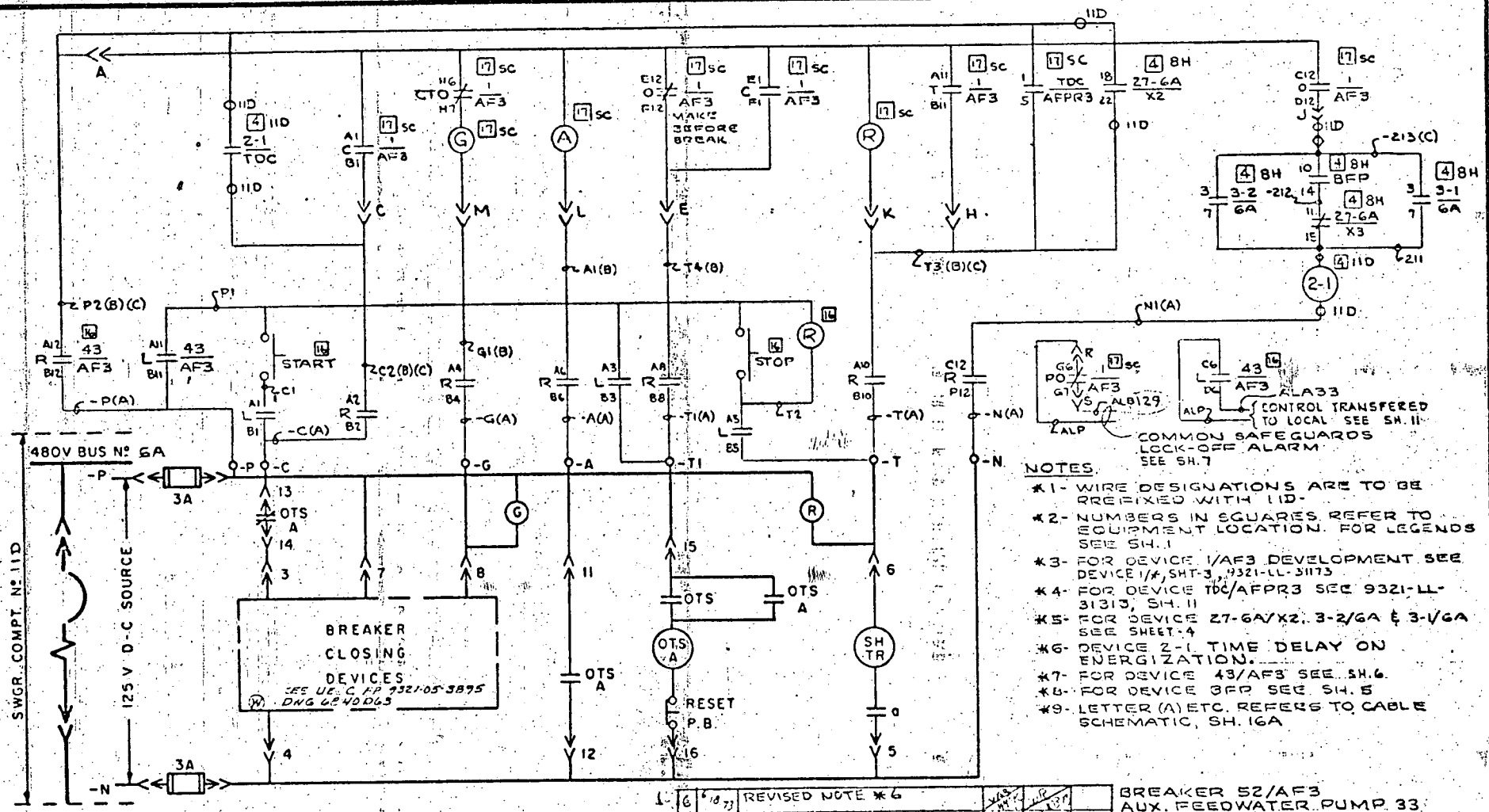

6	6/18/73	REVISED NOTE *6		
5	1/15/73	ADDED DWG NO. TO NOTE 3		
4	1/15/72	REV. CONTACT NO'S		
3	9/3/71	[illegible]		
2	2/3/71	ADDED CABLE LETTERS & NOTE #9		
1	12/16/70	GENERAL REVISION		
0	11/6/70	FIRST ISSUE FOR CONSTRUCTION		
REV.	DATE	DESCRIPTION	ENGR	SUP ENG

ENGINEER [illegible]

STATE REG. NEW YORK NO. 42453

UNITED ENGINEERS & CONSTRUCTORS INC.

BREAKER 52/AF3
AUX. FEEDWATER PUMP 33

WESTINGHOUSE ELECTRIC CORPORATION
FOR
CONSOLIDATED EDISON COMPANY
INDIAN POINT GENERATING STATION - UNIT NO. 3

SCHEMATIC DIAGRAM
480 V. SWITCHGEAR 32

SHEET NO. 16

U.E.&C. DWG. NO. 9321-LL-31183

CON. ED. CO. DWG. NO. D202470

8110030084

RECEIVED
JUL 10 1974
U.S. ATOMIC ENERGY
COMMISSION
Regulatory
Mail Section