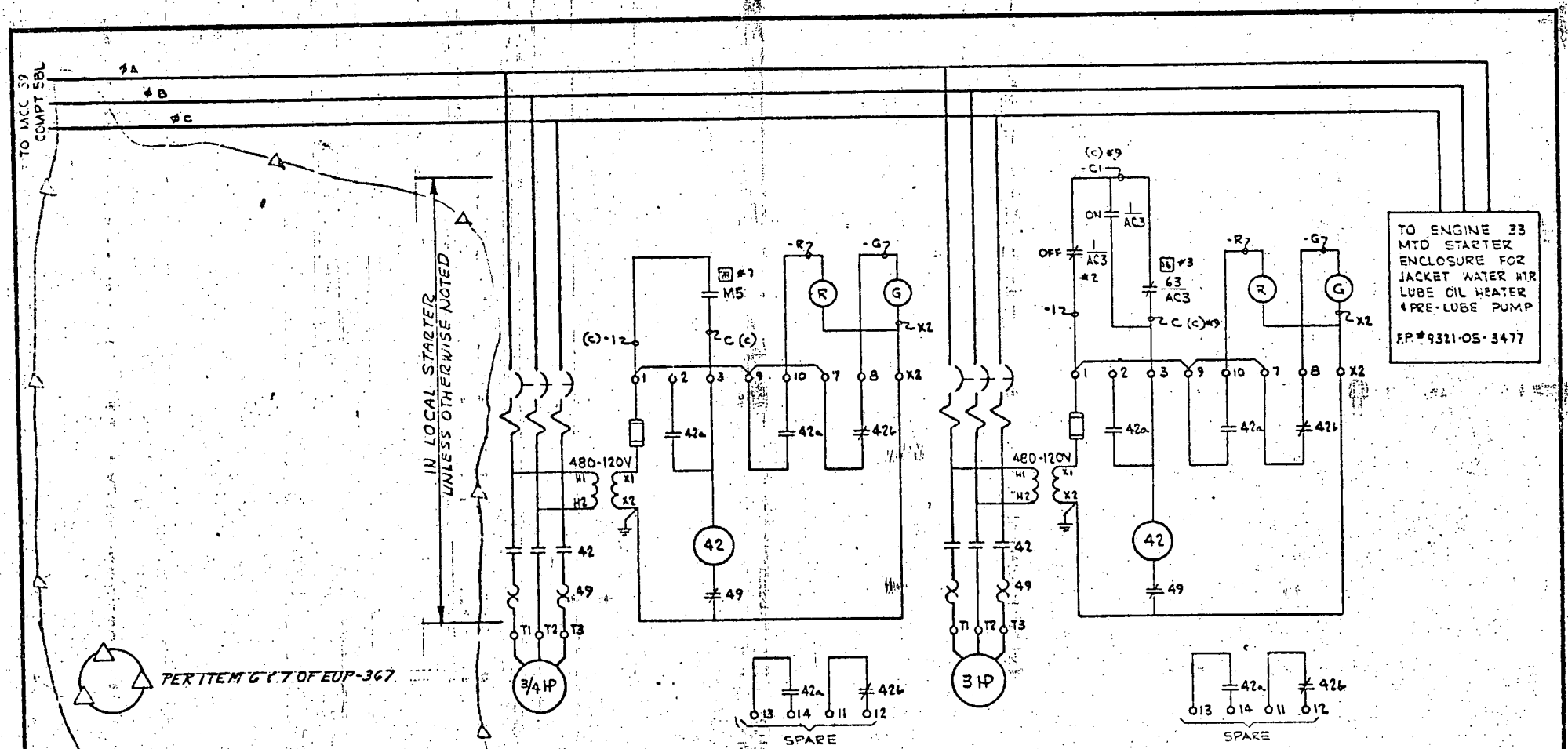

NOTES:

- #1-
- #2- FOR DEVICE 1/AC3, SEE SHEET 1 ARRGT 2
- #3- DEVICE 63/AC3 CLOSES ON PRESS DECREASE TO 275 PSI AND OPENS ON INCREASE TO 300 PSI
- #4-
- #5-
- #6-
- #7- FOR DEVICE M5, SEE F.P. #9321-05-2852
- 8- LETTER (C) REFERS TO CABLE SCHEMATIC SHEET 2A
- #9- LETTER (C) REFERS TO CABLE SCHEMATIC SHEET 2B

REV	DATE	DESCRIPTION	ENGR.	SUP ENG	W
3	1/21/76	REVISED PER ITEM G 6.7 OF EUP-367			
2	1/13/72	RENUMBER (C) SYM. FOR WIRES C1 & C1			
1	5/3/71	ADDED CABLE LETTER REF & NOTES & REV EQUIP LOC INDEX No.			
0	12/7/70	FIRST ISSUE FOR CONSTRUCTION			

ENGINEER Kathleen P. Coleman

STATE REG. NEW YORK NO. 42453

UNITED ENGINEERS & CONSTRUCTORS INC.

WESTINGHOUSE ELECTRIC CORPORATION
FOR
CONSOLIDATED EDISON COMPANY
INDIAN POINT GENERATING STATION - UNIT NO. 3

SCHEMATIC DIAGRAM
DIESEL GENERATOR AUXILIARIES
SHEET NO. 4

U.E. & C. DWG. NO. 9321-LL-31333

CON. ED. CO. DWG. NO. D202471

8111030048

RECEIVED
JUL 3 1974
U.S. GEOLOGICAL SURVEY
DENVER, COLORADO