RECEIVED
JUL 10 1974
U.S. ... COMMISSION
Regulatory
Mail Section

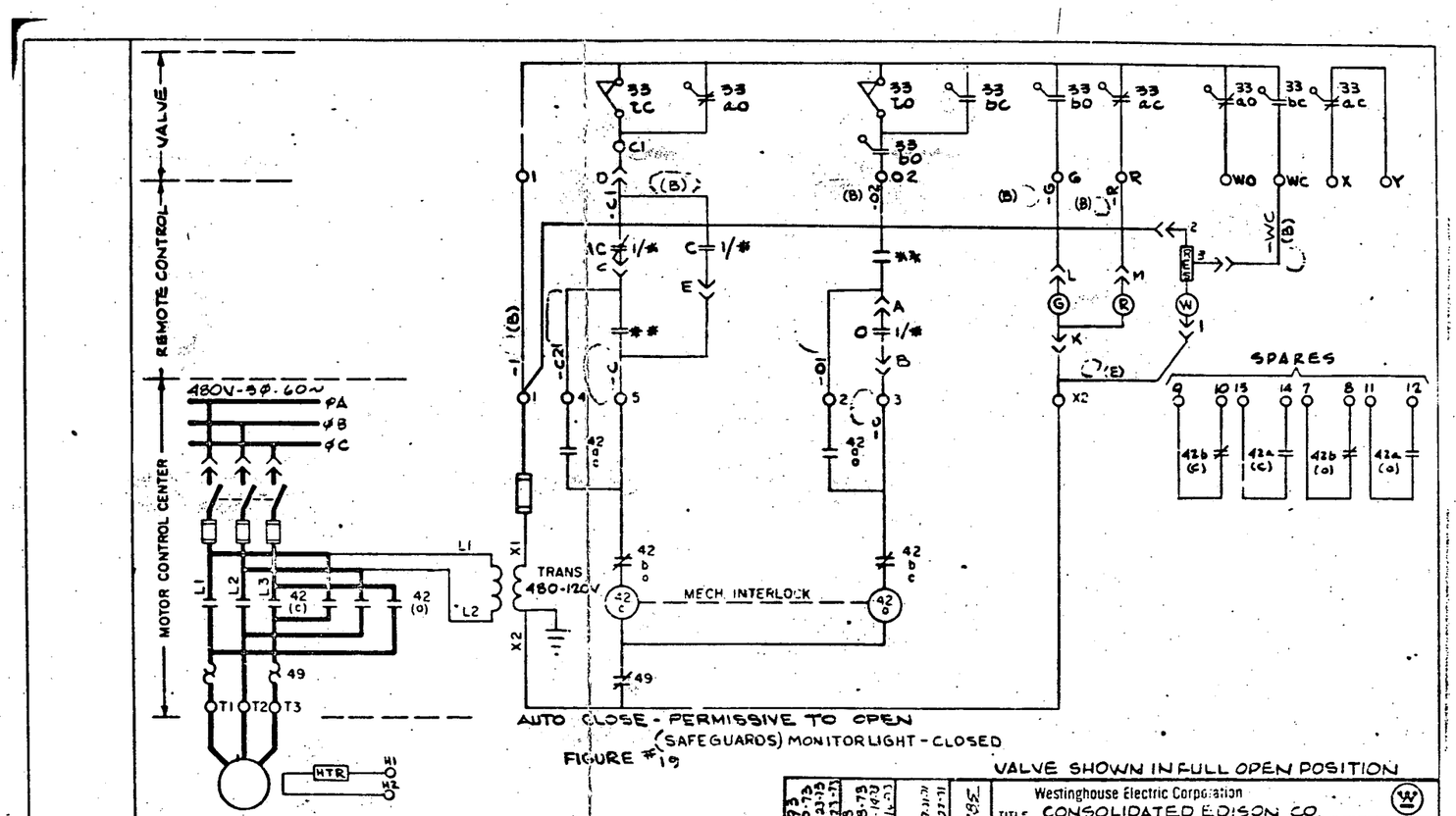

FIGURE #19

VALVE SHOWN IN FULL OPEN POSITION

NOTE:
1. WIRE DESIGNATION ARE TO BE PREFIXED WITH VALVE NO.
2. LETTER (A) ETC. REFERS TO CABLE SCHEMATIC.

ECN-9793 W.C.D. 7-10-73	ECN-9678 W.C.D. 3-8-73	ECN-8051	S.O. INT-385	
4	3	2	SUB	

Westinghouse Electric Corporation
TITLE CONSOLIDATED EDISON CO.
INDIAN POINT STATION - UNIT No 3
ELEMENTARY WIRING DIAG. MOTOR OPERATED VALVE
J. GERBER 6-23-71
500B971
SHEET - 15a
ATOMIC POWER DIV. PITTSBURGH, PA., U.S.A.

~~8111030025~~

24 C B A C 24

6246

8111030025