File Cy.

Regulatory

Received w/Ltr Dated 6-28-73

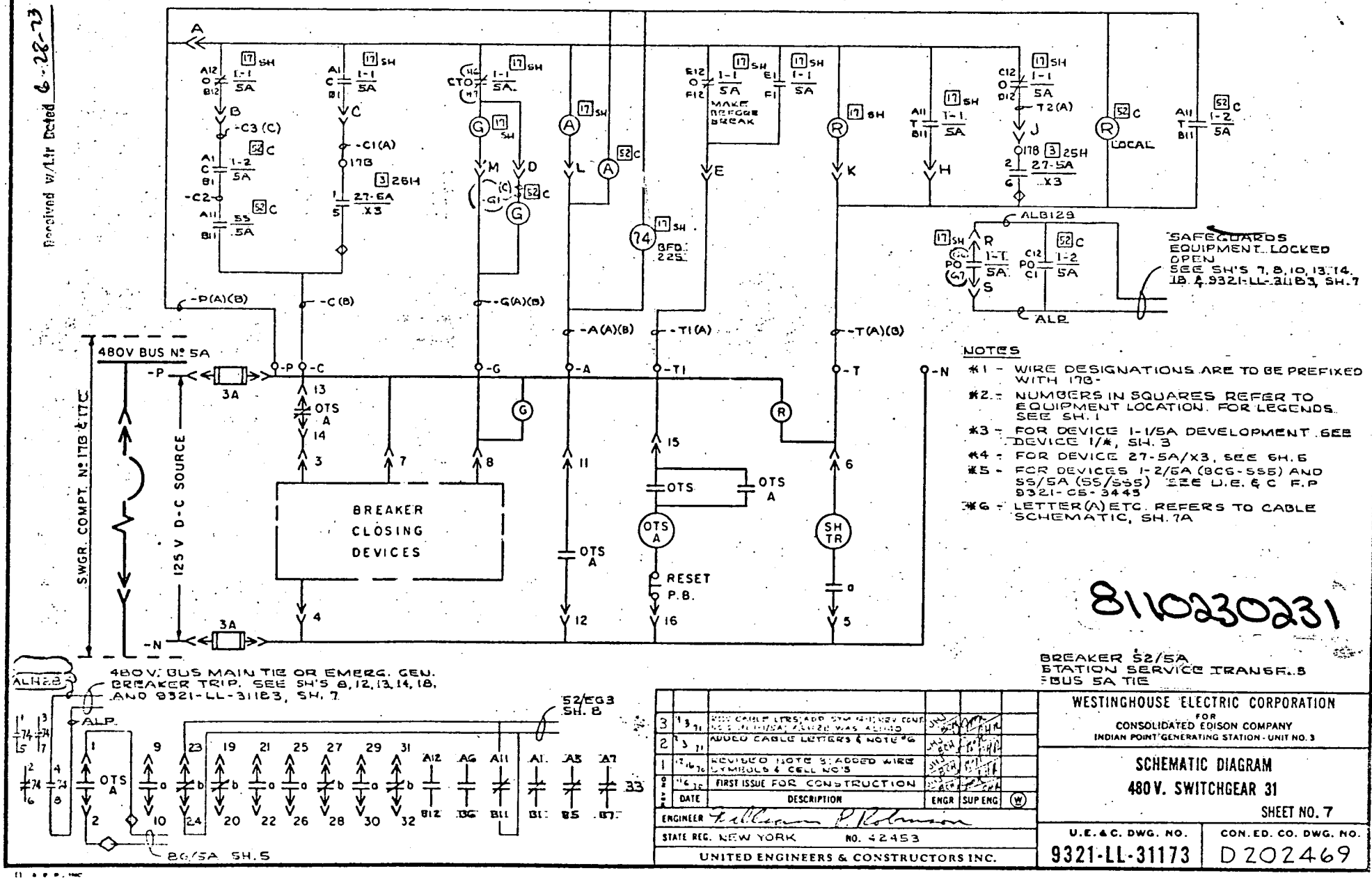

NOTES

*1 - WIRE DESIGNATIONS ARE TO BE PREFIXED WITH 17B-

*2 - NUMBERS IN SQUARES REFER TO EQUIPMENT LOCATION. FOR LEGENDS SEE SH. 1

3 - FOR DEVICE 1-1/5A DEVELOPMENT SEE DEVICE 1/, SH. 3

*4 - FOR DEVICE 27-5A/X3, SEE SH. 6

*5 - FOR DEVICES 1-2/5A (BCG-SSS) AND SS/5A (SS/SSS) SEE U.E. & C F.P 9321-CS-3445

*6 - LETTER (A) ETC. REFERS TO CABLE SCHEMATIC, SH. 7A

8110230231

BREAKER 52/5A
STATION SERVICE TRANSF. 5
BUS 5A TIE

NO.	DATE	DESCRIPTION	ENGR	SUP ENG	W
3	1-3-71	[illegible]	[illegible]	[illegible]	
2	1-3-71	ADDED CABLE LETTERS & NOTE *6	[illegible]	[illegible]	
1	12-16-70	REVISED NOTE 3; ADDED WIRE SYMBOLS & CELL NO'S	[illegible]	[illegible]	
0	11-16-70	FIRST ISSUE FOR CONSTRUCTION	[illegible]	[illegible]	

ENGINEER William P. Robinson

STATE REG. NEW YORK NO. 42453

UNITED ENGINEERS & CONSTRUCTORS INC.

WESTINGHOUSE ELECTRIC CORPORATION
FOR
CONSOLIDATED EDISON COMPANY
INDIAN POINT GENERATING STATION - UNIT NO. 3

SCHEMATIC DIAGRAM
480 V. SWITCHGEAR 31

SHEET NO. 7

U.E.&C. DWG. NO. 9321-LL-31173

CON. ED. CO. DWG. NO. D202469