29-6

File Cy.

Regulatory

Received w/Ltr Dated 6-28-73

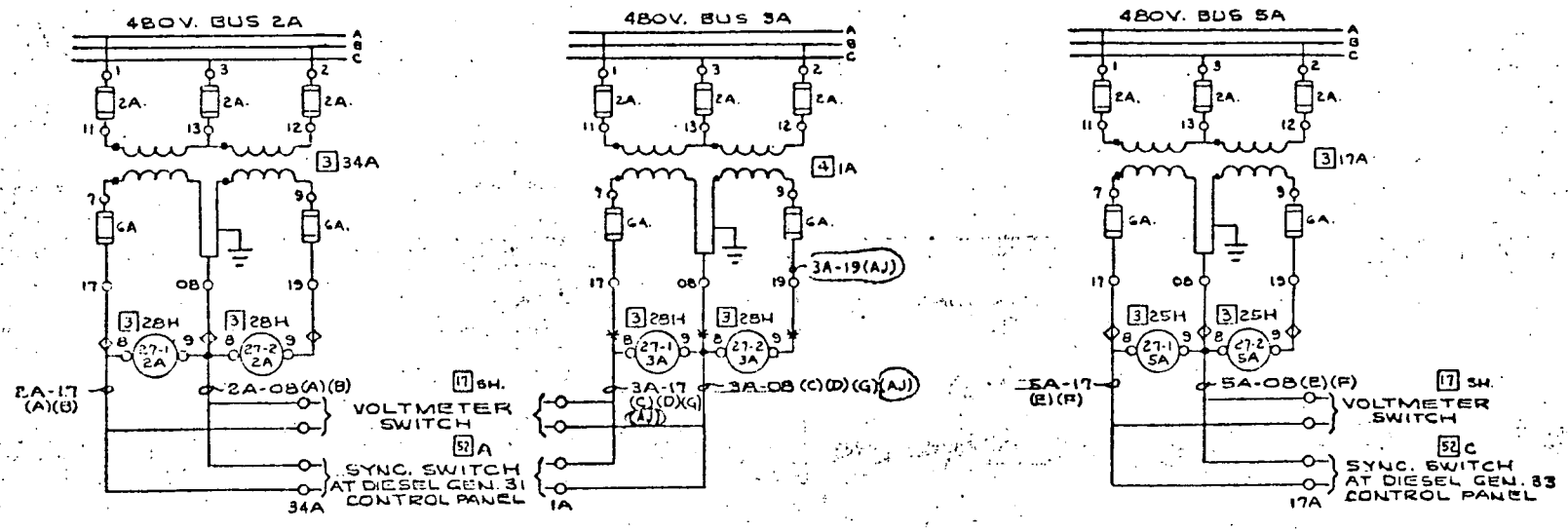

NOTES

*1 - NUMBERS IN SQUARES REFER TO EQUIPMENT LOCATION. FOR LEGENDS SEE SH. 1

*2 - FOR DEVICE 27-1/2A, 27-2/2A, 27-1/3A & 27-2/3A CONTACTS SEE SH. 6.

*3 - FOR DEVICE 27-1/5A & 27-2/5A CONTACTS SEE SH. 5

*4 - FOR SYNC. SWITCH CONNECTIONS AND ADDITIONAL DETAILS SEE 9321-F-30073.

*5 - LETTER (A) ETC. REFERS TO CABLE SCHEMATIC, DWG. 9321-F-30033

8110230229

BUS 2A, 3A, & 5A
UNDERVOLTAGE RELAYS

REV	DATE	DESCRIPTION	ENGR	SUP ENG
4	2-4-72	ADDED 3A-19 & CABLE LTRS (AJ)		
3	4-3-71	REV. NOTE #5		
2	4-3-71	ADDED CABLE LETTERS & NOTE #5		
1	12-16-70	ADDED WIRE SYMBOLS & CELL NOTE		
0	12-6-70	FIRST ISSUE FOR CONSTRUCTION		

ENGINEER William P. Kelman

STATE REG. NEW YORK NO. 42453

UNITED ENGINEERS & CONSTRUCTORS INC.

WESTINGHOUSE ELECTRIC CORPORATION
FOR
CONSOLIDATED EDISON COMPANY
INDIAN POINT GENERATING STATION - UNIT NO. 3

SCHEMATIC DIAGRAM
480 V. SWITCHGEAR 31
SHEET NO. 2

U.E.&C. DWG. NO.	CON. ED. CO. DWG. NO.
9321-LL-31173	D202469