Regulatory File Cy.
Received w/Ltr Dated 6-26-73

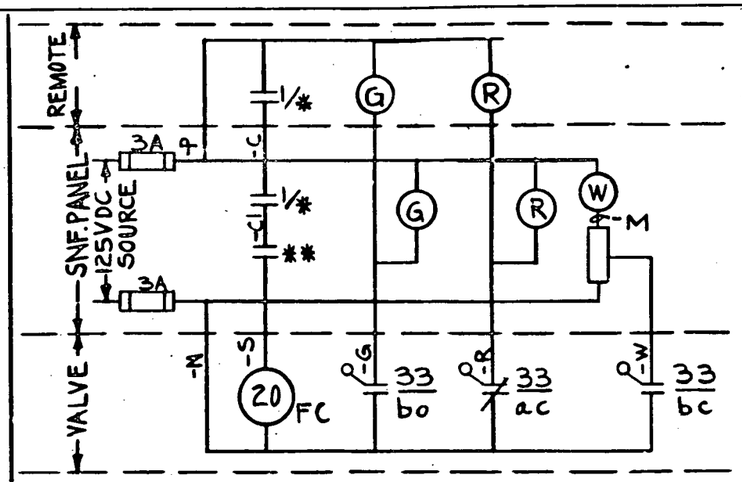

FIG. 19

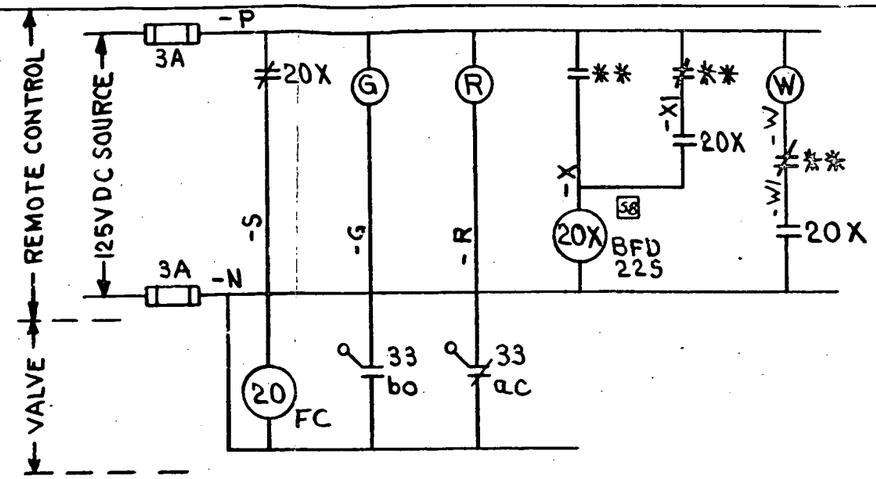

FIG. 20

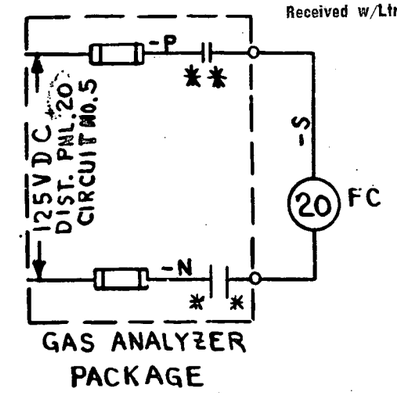

FIG. 21

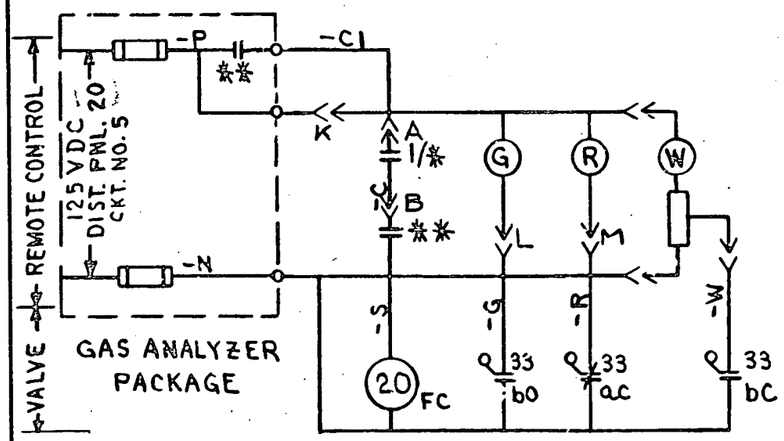

FIG. 22

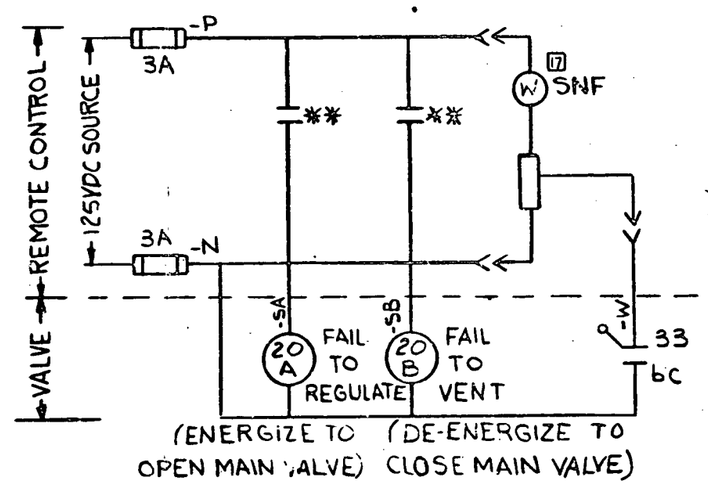

FIG. 23

VALVES SHOWN IN FULL OPEN POSITION.

TERA APERTURE CARD

PRC APERTURE CARD

NOTES:

1. WIRE DESIGNATIONS ARE TO BE PREFIXED WITH VALVE Nº
   SOLENOID & PILOT SOLENOID OPERATED AIR DIAPHRAM VALVES.

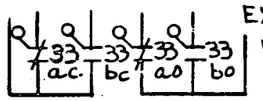

EXTRA CONTACTS SUPPLIED WITH EACH VALVE

ECN-9678 WSP 3-7-73	ECN-7161 3-8-71 4-2-71	ECN-6811 10-1-70 10-2-70	ECN-5511 3-26-70	S.O. ZNT-385	SUB
5	4	3	2		

Westinghouse Electric Corporation

TITLE: CONSOLIDATED EDISON CO
INDIAN POINT STATION UNIT Nº 3
ELEMENTRY WIRING DIA. REMOTE OPER. VALVE

M. HABERCHAK	8-8-69		8/11/69	500B971
			8/11/69	SHEET-123

ATOMIC POWER DIV., PITTSBURGH, PA., U.S.A.

8110230144