Regulatory File Cy.
Received W/Ltr Dated 6-28-73

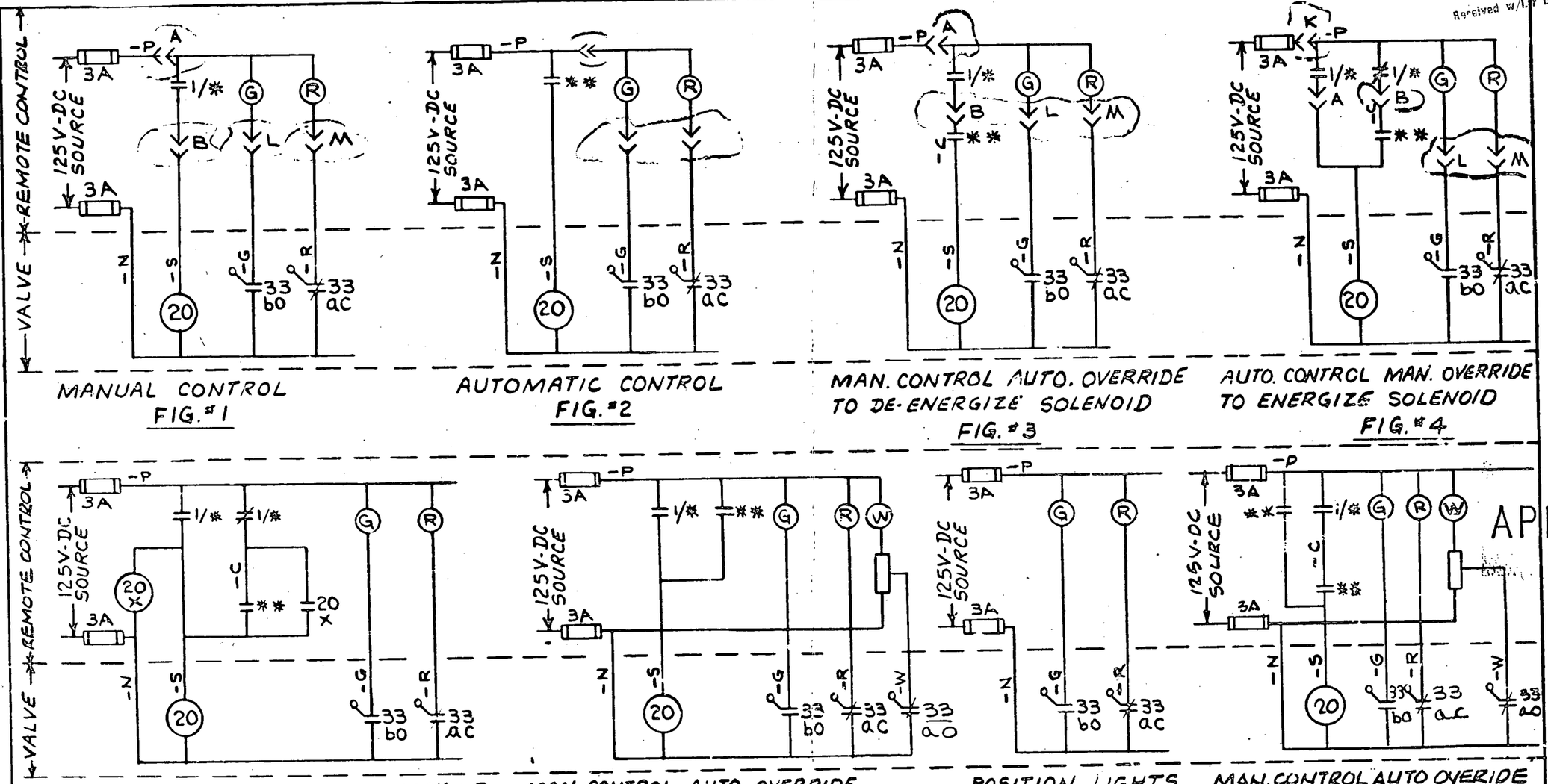

MANUAL CONTROL
FIG. #1

AUTOMATIC CONTROL
FIG. #2

MAN. CONTROL AUTO. OVERRIDE TO DE-ENERGIZE SOLENOID
FIG. #3

AUTO. CONTROL MAN. OVERRIDE TO ENERGIZE SOLENOID
FIG. #4

AUTOMATIC CONTROL WITH LOCK-UP MANUAL OVERRIDE TO RESET
FIG. #5

MAN. CONTROL AUTO. OVERRIDE TO ENERGIZE SOLENOID
FIG. #6

POSITION LIGHTS
FIG. #7

MAN. CONTROL AUTO OVERIDE TO ENERGIZE OR DE-ENERGIZE SOL.
FIG. #8

PRC APERTURE CARD

NOTE: VALVES SHOWN FULL OPEN
WIRE DESIGNATIONS ARE TO BE PREFIXED WITH VALVE Nº
33 ac, 33 bc, 33 ao, 33 bo — EXTRA CONTACTS SUPPLIED WITH EACH VALVE.
SOLENOID & PILOT SOLENOID OPERATED AIR DIAPHRAM VALVES

TERA APERTURE CARD

2	1 SUB	S.O. INT-385

Westinghouse Electric Corporation
TITLE: CONSOLIDATED EDISON CO.
INDIAN POINT STATION - UNIT Nº 3
ELEMENTARY WIRING DIAG. — REMOTE OPERATED VALVES
M. HABERCHAK — 2/11/69 — 500B971
SHEET - 120
ATOMIC POWER DIV. — PITTSBURGH, PA., U.S.A.

8110230140