Regulatory File Cy.

Received w/Ltr Dated 6-28-73

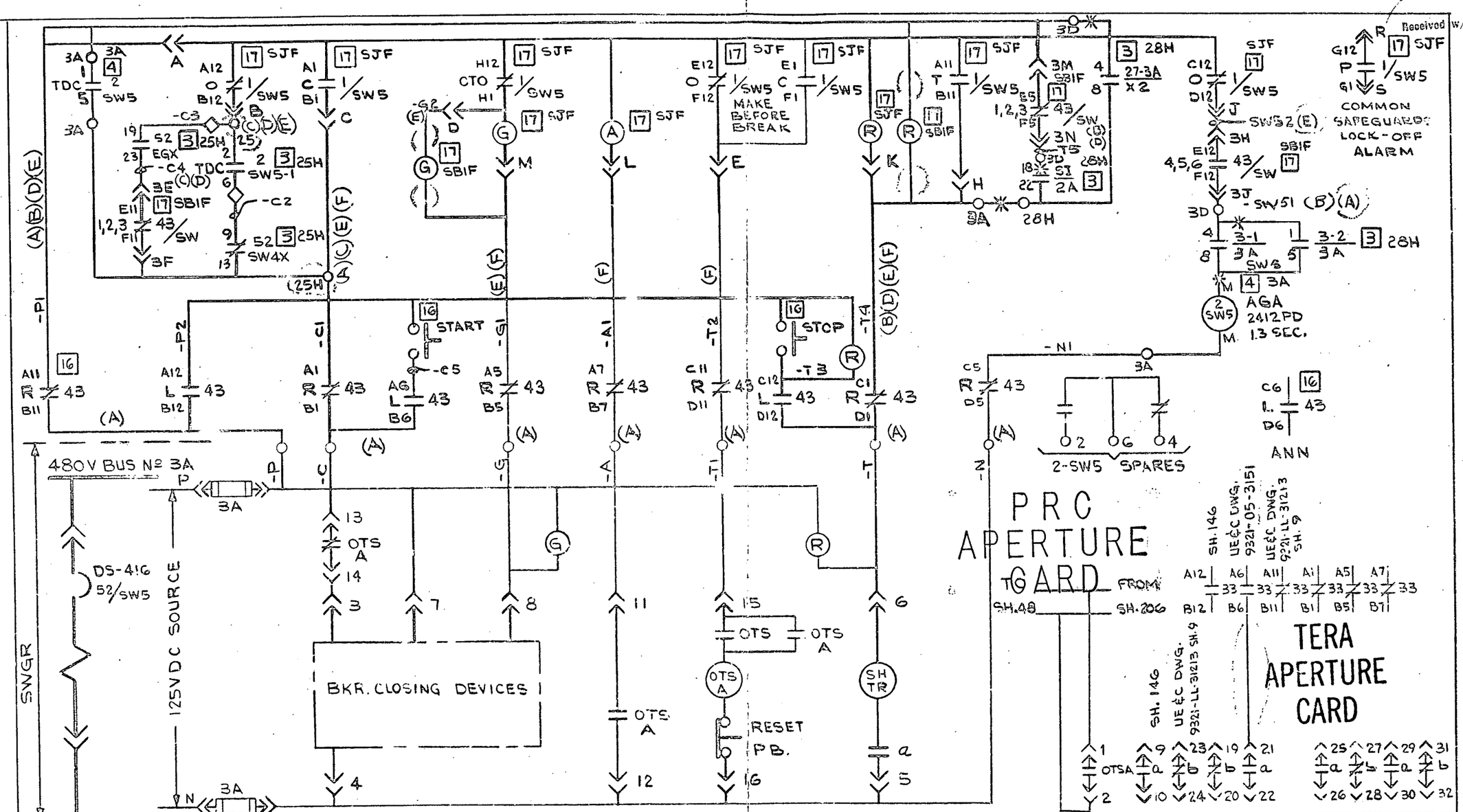

NOTES:

1. WIRE DESIG. PREFIXED WITH 3D
2. 1/SW5 SW. DEV. SH. 9
3. 43/SW SW. DEV. SH. 14
4. 43 SW. DEV. SH. 13
5. ◇ SHOP WIRED
6. ✳ COMMON SFGDS. WIRE-UNIT 5
7. LETTER (A) ETC. REFERS TO CABLE SCHEMATIC DWG. 9321-LL-31183 SH.31A

ECN-96/8 W.C.D. 3-6-73 3-14-73 3-14-73

S.O. INT.-385

6

Westinghouse Electric Corporation

TITLE: CONSOLIDATED EDISON CO.
INDIAN POINT STATION-UNIT NO. 3
ELEMENTARY WIRING DIAG. | SERVICE WATER PUMP 35

Wm Soles	9/29/70		10-27-70
			10-30-70

500B971

SHEET- 34

NUCLEAR ENERGY SYSTEMS PITTSBURGH, PA., U.S.A.

8110230069