April 1988

NEW YORK POWER AUTHORITY

Inservice Inspection Program

Indian Point Unit No. 3
Second Ten Year Interval
August 30, 1986 Through August 30, 1996

This document is the property of and contains proprietary information owned by the Westinghouse Electric Corporation and/or its subcontractors and suppliers, is transmitted to you in confidence and trust, and is to be returned upon request. No permission is granted to publish, use, reproduce, transmit or disclose to another any information contained in this document, in whole or in part, without the prior written permission of an authorized employee of said Corporation.

Prepared by
Westinghouse Electric Corporation
Nuclear Services Integration Division
Pittsburgh, Pennsylvania 15230

9005300014 900618
PDR ADOCK 05000286
Q PDR

INDIAN POINT UNIT NO. 3
INSERVICE INSPECTION PROGRAM
2ND INTERVAL AUGUST 30, 1986 THRU AUGUST 30, 1996

FOR

NEW YORK POWER AUTHORITY
123 MAIN STREET
WHITE PLAINS, NEW YORK 10601

4589R/249R880516:50

NEW YORK POWER AUTHORITY
INDIAN POINT UNIT NO. 3
SECOND TEN-YEAR INSERVICE INSPECTION INTERVAL PROGRAM
AUGUST 30, 1986 THRU AUGUST 30, 1996

INDIAN POINT UNIT NO. 3 WELD AND SUPPORT ISI PLAN REV. 1
(IP3-W&S-KJ) REV. 1

Prepared by: Phillip C. Bukes 7-11-89
Phillip E. Bukes, ISI Engineer
Westinghouse Nuclear Service Division
Inspection Service

Approved by: 7/11/89
Steve R. Armbrister, Manager
Westinghouse Nuclear Service Division
Inspection Service

Approved by: _____
K. Jacobs, Senior Nuclear Operations
and Maintenance Engineer - PWR
New York Power Authority

Approved by: _____
K. R. Chapple, Director of Nuclear
Operations and Maintenance - Pwr -
New York Power Authority

ID:0536b/60889:50-4

NEW YORK POWER AUTHORITY
INDIAN POINT UNIT NO. 3

INSERVICE INSPECTION PROGRAM
SECOND TEN-YEAR INTERVAL
AUGUST 30, 1986 THRU AUGUST 30, 1996

CONTENTS

TAB	TABLE	TITLE	PAGE
1.0	1.0	Introduction	1, 2 & 3
2.0	2.0	Administrative Control	1
3.0	3.0	System Boundaries	1, 2
3.0	3.0	Class 1 Components and Piping	2 thru 7
3.0	3.0	Class 2 Components and Piping	7 thru 14
3.0	3.0	Class 3 Components and Piping	15 thru 24
3.0	3.0	Class 1, 2 & 3 Component and Piping Supports	25
4.0	4.0	Class 1 Program	1 thru 13
4.0	4.0	Class 2 Program	14 thru 42
4.0	4.0	Class 3 Program	43, 44, 45
4.0	4.0	Class 1, 2 & 3 Component & Piping Support Program	46 thru 54
4.0	4.0	Notes for Class 1, 2 and 3 Program	55 and 56
4.0	4.0	Relief Requests for Class 1, 2 and 3 Program	57 thru 76
5.0	--	Class 1 Component Surveillance Schedule	1 thru 104
5.0	--	Class 2 Component Surveillance Schedule	1 thru 52
5.0	--	Class 3 Componenet Surveillance Schedule	1 thru 13
5.0	--	Class 1, 2 and 3 Supports Surveillance Schedule	1 thru 35

NEW YORK POWER AUTHORITY
INDIAN POINT UNIT NO. 3

INSERVICE INSPECTION PROGRAM
SECOND TEN-YEAR INTERVAL
AUGUST 30, 1986 THRU AUGUST 30, 1996

CONTENTS

TAB	TABLE	TITLE	PAGE
6.0	--	Class 1, 2 and 3 Accountability Tables by Sketch	1 thru 19
6.0	--	Class 1, 2 and 3 Accountability Tables by Item	1 thru 7
6.0	--	Class 1, 2 and 3 Accountability Tables by Category	1 thru 5
7.0	--	Class 1, 2 and 3 Component, Piping and Support Sketches	--

INTRODUCTION AND BACKGROUND

INTRODUCTION

The Indian Point Unit No. 3 Nuclear Power Plant's Weld and Support Inservice Inspection (ISI) Plan is prepared for the Second Ten-Year Inspection Interval from August 30, 1986 thru August 30, 1996.

The Weld and Support ISI Plan encompasses the Indian Point Unit No. 3 ISI Class 1, 2, 3 and Augmented Inspections for Components, Piping and Supports which are idenified by the System Boundaries (Table 3.0). This ISI plan is developed by giving due consideration to the following documents and applicable relief requests (Table 4.0).

1.0 Code of Federal Regulations 10CFR50.55A

2.0 ASME Boiler and Pressure Vessel Code Section V-1983 Edition thru Summer 1983 Addenda.

3.0 ASME Boiler and Pressure Vessel Code Section XI - 1983 Edition thru Summer 1983 Addenda.

4.0 ASME Boiler and Pressure Vessel Code Section XI - 1974 Edition thru Summer 1975 Addenda.

5.0 United States Nuclear Regulatory Commission Regulatory Guides

- 5.1 Regulatory Guide 1.14 Rev. 1
- 5.2 Regulatory Guide 1.16 Rev. 4
- 5.3 Regulatory Guide 1.26 Rev. 2 Draft
- 5.4 Regulatory Guide 1.83 Rev. 1
- 5.5 Regulatory Guide 1.147 Rev. 3
- 5.6 Regulatory Guide 1.150 Rev. 1

6.0 Indian Point Unit No. 3 FSAR

7.0 Indian Point Unit No. 3 Technical Specification

8.0 Indian Point Unit No. 3 Preservice Inspection Plan

9.0 Indian Point Unit No. 3 1st Ten-Year Inservice Inspection Plan

This plan outlines the ISI requirements for the Indian Point Unit No. 3 Second Ten-Year Interval which started August 30, 1986 and ends August 30, 1996. This interval will be divided into three periods of three years, four years and three years for the first, second and third periods respectively. The ISI Class 1, Class 2 and Class 3 Components, Piping and their Supports will meet the standards in the ASME Boiler and Pressure Vessel Code Section XI-1983 Edition thru Summer 1983 Addenda...except for applicable Relief Requests.

Due to United States Regulatory Commission Implementation, Optional Owner Upgrades, Plant Modidifications, reverification of existing components, piping and supports, this Inservice Inspection Program is subject to change. Changes will be effected by Relief Requests or document revisions. The Indian Point Unit No. 3 Inservice Inspection Program will be updated as required to reflect changes as previously noted.

In certain cases, strict compliance with ASME Boiler and Pressure Vessel Code Section XI-1983 Edition thru Summer 1983 Addenda has been determined to be impractical for Indian Point Unit No. 3. It is stated in 10 CFR50.55 a(g) (iii) that:

"If the licensee has determined that conformance with certain code requirements is impractical for his facility, the licensee shall notify the Commission and submit information to support his determinations.

Relief from the examination requirements of ASME Boiler and Pressure Vessel Code Section XI-1983 Edition thru Summer 1983 Addenda for ISI Class 1, Class 2 and Class 3 components, piping and supports at Indian Point Unit No. 3 are discussed and referenced in Tables 3 and 4. Relief from the examination requirements is requested based upon the justification and alternative examination methods provided.

The Inservice Inspection Program has been developed from an engineering review of the systems, components and supports at Indian Point Unit No. 3. A provision in 10 CFR 50.55 a(g) allows for taking exception to examination of components in the event that unforseen difficulties are encountered. When an examination is determined to be impractical during the process of performing inspections or test, the exception will be identified in the Inservice Inspection Outage Report and relief will be requested by revision to the Inservice Inspection Program.

The following items that are to be examined under ASME Boiler and Pressure Vessel Code Section XI-1983 Edition thru Summer 1983 Addenda and are not included in this plan will be controlled and covered under the Indian Point Unit No. 3 Technical Specifications.

1.0 Steam Generator Tubing IWB-2500-1 Category B-Q Item No. B16.20 are to be examined by eddy current in accordance with the requirements of Technical Specification 4.9 per Section XI-Subarticle IWB-2413.

2.0 System leakage and Hydrostatic Pressure Tests are scheduled and controlled under specific Indian Point Unit No. 3 procedures. Reports of test results will be included in each Inservice Inspection Summary Report.

3.0 Performance Testing of Snubbers - will be scheduled and controlled under specific Indian Point Unit No. 3 procedures and technical specifications.

4.0 Inservice Testing of Component Supports - IWF-2500-1-VT4 Paragraph B examinations will be scheduled and controlled under specific Indian Point Unit No. 3 procedures.

5.0 Inservice Testing of Pumps and Valves - Subsections IWP and IWV will be scheduled and controlled under specific Indian Point Unit No. 3 Pump and Valve Testing Program.

6.0 Repairs, modifications, replacements and alterations to pressure retaining components will be made in accordance with ASME Boiler and Pressure Vessel Code Section XI-1983 Edition thru Summer 1983 Addenda Subsections IWA-4000, IWB-4000, IWC-4000, IWD-4000, IWF-4000, IWA-7000, IWB-7000, IWC-7000, IWD-7000, and IWF-7000, as applicable.

BACKGROUND

The Preservice Inspection (completed 1976) and First 3 1/3 year Inservice Inspection Period (August 1976 thru December 1979) were conducted in accordance with ASME Boiler and Pressure Vessel Code Section XI-January 1970 and to the requirements of Indian Point Unit No. 3 Technical Specification 4.2.1.

The Second and Third periods of the 1st Ten-year Inservice inspection Plan (January 1980 thru August 1987) were conducted in accordance with ASME Boiler and Pressure Vessel Code Section XI-1974 Edition thru Summer 1975 Addenda.

CALIBRATION BLOCKS

Calibration blocks for the Second Ten-Year Inservice Inspection Program will be those used during the 1st Ten-Year Interval - 2nd and 3rd Periods.

Existing calibration blocks used during the 1st Ten-Year Interval - 2nd and 3rd periods were reviewed by Westinghouse NSID in August 1987 to compare to those recommended by ASME Boiler and Pressure Vessel Code Section V and XI-1983 Edition thru Summer 1983 Addenda. Calibration blocks that deviated from the intent of Section V and XI-1983 Edition thru Summer 1983 Addenda were recommended to be replaced by Indian Point No. 3. Additional calibration blocks will be supplied as required.

Reference Westinghouse Nuclear Services Integration Division -- Inspection Services Report: Indian Point Unit No. 3 Calibration Blocks for Inservice Examination -- August 1987.

ADMINISTRATIVE CONTROL

1.0 The Indian Point Unit No. 3 Inservice Inspection Program 2nd Ten Year Interval August 30, 1986 thru August 30, 1996 as required by ASME Boiler and Pressure Vessel Code Section XI-1983 Edition thru Summer 1983 Addenda as required for ISI Class 1, 2 and 3 Components, Piping and Supports has been prepared and reviewed by:

1.1 New York Power Authority
1.2 Westinghouse Nuclear Services Division - Inspection Services

2.0 The status of this 2nd Ten Year Inspection Program is to be maintained in a current condition. This program shall be revised, if required, following the performance of each on-site examinations to reflect any changes to scope, methods or procedures found necessary.

3.0 New York Power Authority shall be responsible for advising Westinghouse NSID - Inspection Service of any changes to the plant installed condition due to maintenance, repair or replacement or of any changes in program scope or applicability due to changes in commitments to USNRC Regulatory Guide requirements.

4.0 New York Power Authority shall be responsible for supplying the Authorized Inspection Agency for all ASME Boiler and Pressure Vessel Code Section XI-1983 Edition thru Summer 1983 Addenda examinations.

5.0 Westinghouse NSID - Inspection Services as subcontractor to New York Power Authority shall be responsible for maintaining the original copy of the program plan for the 2nd Ten-Year Interval in a current condition and ensuring that all copies of all revisions are sent to New York Power Authority representative for insertion in the controlled copies.

6.0 All items to be examined during a given period are to be scheduled for completion by the end of the applicable period. A summary Inservice Inspection report as required by ASME Boiler and Pressure Vessel Code Section XI-1983 Edition thru Summer 1983 Addenda IWA-6000 for ISI Class 1, 2 and 3 components, piping and their supports shall be filed within 90 days after completion of the Inservice Inspection, with the Enforcement and Regulatory Authority having jurisdiction at the plant. The summary Inservice Inspection Report will be prepared jointly by Westinghouse Nuclear Service Integration Division and New York Power Authority and reviewed by New York Power Authority and their Authorized Inspection Agency for final acceptance.

SYSTEM BOUNDARIES

1.0 Inservice Inspection for the 2nd Interval of ISI Class 1, 2 and 3 Components, Piping and Supports for Indian Point Unit No. 3 are required to meet the standards in ASME Boiler and Pressure Vessel Code Section XI-1983 Edition thru Summer 1983 Addenda with the exception of Table IWB-2500-1 Category B-J and Table IWC-2500-1 Category C-F, which will meet the selection criteria identified in ASME Boiler and Pressure Vessel Code Section XI-1974 Edition thru Summer 1975 Addenda.

1.1 Class 1 Components and Piping have been scheduled for examination in accordance with the Inspection Program outlined in Paragraphs IWB-2412 (Inspection Program B), IWB-2420 and IWB-2430. Table 4.0 presents the summary of these examinations for the Second Ten-Year Interval.

1.2 Class 2 Components and Piping have been scheduled for examination in accordance with the Inspection Program outlined in Paragraphs IWC-2412 (Inspection Program B), IWC-2420 and IWC-2430. Table 4.0 presents the summary of these examinations for the Second Ten-Year Interval.

1.3 Class 3 Components and Piping have been scheduled for examination in accordance with the Inspection Program outlined in IWD-2400. Table 4.0 presents the summary of these examinations for the Second Ten-Year Interval.

1.4 Class 1, 2 and 3 Component Supports have been scheduled for examination in accordance with the Inspection Program outlined in IWF-2400. Table 4.0 presents the summary of these examinations for the Second Ten-Year Interval.

2.0 Inservice Inspection of ISI Class 1, 2 and 3 System Boundaries for Indian Point Unit No. 3 - 2nd Ten Year Interval are identified on the following Drawings.

System	New York Power Authority Drawing No.
Reactor Coolant System Sheet No. 1	ISI-27383
Reactor Coolant System Sheet No. 2	ISI-27473
Auxiliary Coolant System Sheet No. 1	ISI-27203
Auxiliary Coolant System Sheet No. 2	ISI-27513
Safety Injection System Sheet No. 1	ISI-27353
Safety Injection System Sheet No. 2	ISI-27503
Chemical & Volume Control System Sheet No. 1	ISI-27363
Main Steam	ISI-20173
Steam Generator Blowdown System	ISI-27293
Boiler Feedwater	ISI-20193
Sampling System	ISI-27453

System	New York Power Authority Drawing No.
Isolation Valve Seal Water System	ISI-27463
Service Water System Nuclear Steam Supply Plant	ISI-27223
Condensate & Boiler Feed Pump Suction	ISI-20183
Waste Disposal System Sheet No. 1	ISI-27193
Auxiliary Steam Supply and Condensate Return System	ISI-40573
Primary Make-Up Water System Nuclear Steam Supply Plant	ISI-27243
Instrument Air	ISI-20363
Station Air	ISI-20353
Hydrogen Recombiner System	ISI-27533
Nitrogen to Nuclear Equipment	ISI-27233
Penetration and Liner Weld Joint Channel Pressurization System	ISI-27263
Post Accident Containment Sampling System	ISI-26533
Post Accident Containment Venting System	ISI-40793

CLASS 1 COMPONENTS AND PIPING

3.0 Class 1 Components and Piping, with the exception of Category B-J components and piping, have been scheduled in accordance with the regular Inspection Program outlined in ASME Boiler and Pressure Vessel Code Section XI-1983 Edition thru Summer 1983 Addenda, Paragraphs IWB-2412, IWB-2420 and IWB-2430. Because the application for a construction permit for the Indian Point Unit No. 3 Nuclear Power Plant was
". . . docketed prior to July 1, 1978, the extent of examination for Code Class 1 pipe welds may be determined by the requirements of Tables IWB-2500 and IWB-2600 Category B-J of ASME Boiler and Pressure Vessel Code Section XI-1974 Edition thru Summer 1975 Addenda . . ." per 10 CFR 55a(b) (2)(ii). With the exception of items covered under Category B-J, the extent of examination for all Class 1 Components was determined by the requirements of Table IWB-2500-1 of the ASME Boiler and Pressure Vessel Code Section XI-1983 Edition thru Summer 1983 Addenda. Table 4.0 lists and quantifies these requirements. Acceptance standards for flaw indications, repair procedures, system pressure tests and replacements are defined in Paragraphs IWB-3000, IWB-4000, IWB-5000 and IWB-7000, respectively.

Sections 4.1 and 4.2 is a listing of Class 1 components and piping to be examined and Section 4.3 is a listing of those Class 1 Components and Piping which have been exempted from examination under the provisions of ASME Boiler and Pressure Vessel Code Section XI-1983 Edition thru Summer 1983 Addenda.

The Class 1 Components and Piping requiring examination at the Indian Point Unit No. 3 Nuclear Power Plant are:

3.1 Reactor Vessel
3.2 Pressurizer
3.3 Steam Generators 31, 32, 33 and 34
3.4 Piping Pressure Boundary
3.5 Reactor Coolant Pumps 31, 32, 33 and 34
3.6 Valve Pressure Boundary

Refer to Section 4.2.6 for augmented examinations to be performed at Indian Point Unit No. 3 in excess of ASME Boiler and Pressure Vessel Code Section XI-1983 Edition thru Summer 1983 Addenda requirements.

4.0 Class 1 System Boundaries

The Systems listed below include those Class 1 Systems which have been included in the Indian Point Unit No. 3 Inservice Inspection Program.

System	New York Power Authority Drawing No.
Reactor Coolant System Sheet No. 1	ISI-27383
Reactor Coolant System Sheet No. 2	ISI-27473
Auxiliary Coolant System Sheet No. 1	ISI-27203
Safety Injection System Sheet No. 1	ISI-27353
Chemical and Volume Control System Sheet No. 1	ISI-27363
Sampling System	ISI-27453

4.1 Class 1 Components which require Volumetric, Surface or Visual examination are:

4.1.1 Reactor Vessel
4.1.2 Pressurizer
4.1.3 Steam Generators 31, 32, 33 & 34
4.1.4 Reactor Coolant Pumps 31, 32, 33 and 34

4.2 Class 1 Piping Pressure Boundary

Portions of the Piping Systems in the Reactor Coolant System, Auxiliary Coolant System, Safety Injection System, Chemical and Volume Control System and Sampling System are Class 1. Class 1 Piping Pressure Boundaries which require Volumetric, Surface or Visual examination under Category B-J are:

4.2.1 Loop 31

4.2.1.1 Reactor Coolant Pipe
4.2.1.2 10" Accumulator Discharge Line 351 to Check Valve 895A
4.2.1.3 6" RHR Line 355 to Check Valve 838A

4.2.1.4 2" SIS Line 56A to Check Valve 857A
4.2.1.5 10" Plocap to 2" SIS Line 843 to Check Valve 857P
4.2.1.6 3" Letdown Line 79 and 2" Drain Line 81 to Valves LCV460 and Valve 508B
4.2.1.7 3" RTD Line 775 to Cap and 2" RTD Line 775 to Cap
4.2.1.8 3" Charging Line 96 to Check Valve 210B
4.2.1.9 2" & 1 1/2" SIS Coldleg Line 753 to Check Valve 857L
4.2.1.10 2" & 1 1/2" Seal Injection Line 41 to Check Valve 251J

4.2.2 Loop 32

4.2.2.1 Reactor Coolant Pipe
4.2.2.2 14" RHR Line 10 to Valve 730
4.2.2.3 10" Accumulator Discharge Line 352 to Check Valve 895B
4.2.2.4 6" RHR Line 356 to Check Valve 838B
4.2.2.5 2" SIS Line 845 to Check Valve 857S
4.2.2.6 10" Plocap
4.2.2.7 3" RTD Line 777 to Cap and 2" RTD Line 777 to Cap
4.2.2.8 3" Charging Line 80 to Check Valve 210A
4.2.2.9 2" and 1 1/2" SIS Line 16A to Check Valve 857K
4.2.2.10 2" & 1 1/2" Seal Injection Line 42 to Check Valve 251K
4.2.2.11 2" Drain Line 82 to Valve 505B

4.2.3 Loop 33

4.2.3.1 Reactor Coolant Pipe
4.2.3.2 10" Accumulator Discharge Line 353 to Check Valve 895C
4.2.3.3 6" RHR Line 358 to Check Valve 838C
4.2.3.4 2" SIS Line 844 to Check Valve 857Q
4.2.3.5 10" Plocap to 2" SIS Line 56 to Check Valve 857H
4.2.3.6 3" RTD Line 788 to Cap and 2" RTD Line 788 to Cap
4.2.3.7 2" & 1 1/2" SIS Line 754 to Check Valve 857M
4.2.3.8 2" & 1 1/2" Seal Injection Line 43 to Check Valve 251L
4.2.3.9 2" Drain Line 83 to Valve 511B

4.2.4 Loop 34

4.2.4.1 Reactor Coolant Pipe
4.2.4.2 10" Accumulator Discharge Line 350 to Check Valve 895D
4.2.4.3 6" RHR Line 361 to Check Valve 838D

4.2.4.4 2" SIS Line 846 to Check Valve 857U
4.2.4.5 10" Plocap
4.2.4.6 3" RTD Line 790 to Cap and 2" RTD Line 790 to Cap
4.2.4.7 2" & 1 1/2" SIS Line 16 to Check Valve 857J
4.2.4.8 2" & 1 1/2" Seal Injection Line 44 to Check Valve 251M
4.2.4.9 2" Drain Line 84 to Valve 515B

4.2.5 Pressurizer

4.2.5.1 14" Pressurizer Surge Line 63
4.2.5.2 6" Pressurizer Safety Line 342 to Valve PCV 464
4.2.5.3 6" Pressurizer Safety Line 343 to Valve PCV 466
4.2.5.4 6" Pressurizer Safety Line 344 to Valve PCV 468
4.2.5.5 4" & 3" Pressurizer Spray Line 61 and Line 62
4.2.5.6 4" & 3" Pressurizer Relief Line 70 to Valves PCV 455C and PCV 456
4.2.5.7 2" Auxiliary Spray Line 64 to Valve 212

4.2.6 Augmented Examinations

4.2.6.1 Reactor Vessel - United States Nuclear Regulatory Commission Regulatory Guide 1.150 Rev. 1

4.2.6.2 Reactor Coolant Pumps 31, 32, 33 & 34 - United States Nuclear Regulatory Commission Regulatory Guide 1.14.

4.3 Class 1 Exempt Components and Piping

The following Class 1 Components and Piping or parts of components and piping for Indian Point Unit No. 3 are exempted from volumetric and surface examination by ASME Boiler and Pressure Vessel Code - Section XI - 1983 Edition thru Summer 1983 Addenda Paragraph IWB-1220 according to the following criteria:

(a) Components that are connected to the reactor coolant system and part of the reactor coolant pressure boundary and that are of such a size and shape so that upon postulated rupture the resulting flow of coolant from the reactor coolant system under normal plant operating conditions is within the capacity of makeup systems which are operable from on-site emergency power.

(b) (1) piping of 1 in. nominal pipe size and smaller, except for steam generator tubing

(2) components and their connections in piping of 1 in. nominal pipe size and smaller

(c) Reactor vessel head connections and associated piping, 2 in. nominal pipe size and smaller, made inaccessible by control rod drive penetrations

Class 1 Components and Piping and supports exempted under these guidelines will be visually examined during system leakage and hydrostatic tests as required by Table IWB-2500-1 Category B-P Item No. B15.10, B15.11, B15.20, B15.21, B15.30, B15.31, B15.50, B15.51, B15.60, B15.61, B15.70 and B15.71

4.3.1 Class 1 Piping and components which are exempt from volumetric and surface examinations by IWB-1220(b) are:

4.3.1.1 Reactor Coolant System 3/4" Flow Temperature Lines to Valves 503, 506, 509, 513, 504A, 504B, 504C, 507A, 507B, 507C, 510A, 510B, 510C, 514A, 514B and 514C

4.3.1.2 Reactor Coolant System RTD Temperature Element Lines to TE & TW413A, TE & TW413B, TE & TW423A, TE & TW423B, TE & TW 433A, TE & TW433B, TW443A and TE & TW443B

4.3.1.3 Reactor Coolant System 1" Sampling Line 59A to Valve 955A and 1" Sampling Line 59 to Valve 955B

4.3.1.4 Reactor Coolant System 1" Hotleg Take-Off Lines to caps

4.3.1.5 Reactor Coolant System 3/8" Line 447 to Valve 540

4.3.1.6 Reactor Coolant System 3/4" Line to Valve 512

4.3.1.7 Reactor Vessel 3/4" Line 522 to Valve 657

4.3.1.8 Reactor Vessel 3/4" Line 340 and Line 445 to Valves 502 and 501

4.3.1.9 Excess Letdown 1" Line 97 to Valve 213B

4.3.1.10 Reactor Vessel 1" Line 3031 to Valves RCS-SOV-653 and RCS-SOV-655

4.3.1.11 Pressurizer 3/4" Lines to Valves 527, 531, 532, 533, 534, 537, 538, 574A, 574B, 574C, RC-524, RC-525, RC593 and RC596

4.3.1.12 Pressurizer Sampling System 3/4" Lines 25 and 26 to Valves 951 and 953

4.3.1.13 Safety Injection System 3/4" Lines to Valves 110, 112, 113, 119, 120, 123, 124, 130, 139, 153, 156, 157, 159, 160 and 163

4.3.1.14 Safety Injection System 3/4" Line 31 to Valve 839H, Line 605 to Valve 839D, Line 606 to Valve 839F and Line 607 to Valve 839B

4.3.1.15 Reactor Coolant Pump 3/4" Seal By Pass to Flow Orifices Lines 75, 76, 77 & 78

4.3.1.16 Reactor Coolant Pump 3/4" Lines to Valves 141, 143, 144, 145, 252A, 253A, 254A, 255A, 260A, 252B, 253B, 254B, 255B, 260B, 252C, 253C, 254C, 255C, 260C, 252D, 253D, 254D, 255D and 260D.

CLASS 2 COMPONENTS AND PIPING

5.0 Class 2 Components and Piping, with the exception of Category C-F Components and Piping, have been scheduled in accordance with the regular Inspection Program outlined in ASME Boiler and Pressure Vessel Code Section XI-1983 Edition thru Summer 1983 Addenda Paragraphs IWC-2412, IWC-2420, IWC-2430 and IWC-2500. Because the application for a construction permit for the Indian Point Unit No. 3 Nuclear Power Plant was ". . . docketed prior to July 1, 1978, the extent of examination for Code Class 2 pipe welds may be determined by the requirements of Paragraph IWC-1220, Table IWC-2520, Category C-F and C-G and Paragraph IWC-2411 in the ASME Boiler and Pressure Vessel Code Section XI-1974 Edition thru Summer 1975 Addenda . . ." per 10 CFR 50.55a(b)(iv)(B). The actual welds selected for the Second Ten-Year Interval include 100% of the welds done during the 1st Ten-Year Interval 2nd and 3rd periods plus additional welds necessary to meet the 1st period and additional welds evaluated as necessary to meet the requirements of IWC-2430. Table 4.0 lists and quantifies these requirements. Acceptance standards for flaw indications, repair procedures, system pressure tests and replacements are defined in IWC-3000 (in course of preparation, rules of IWB-3000 may be used), IWC-4000, IWC-5000 and IWC-7000, respectively.

Section 6.1 and 6.2 is a listing of Class 2 Components and Piping to be examined and Section 6.3 is a listing of those Class 2 Components and Piping which have been exempted from examination under the provisions of ASME Boiler and Pressure Vessel Code Section XI-1983 Edition thru Summer 1983 Addenda.

The Class 2 Components and Piping requiring examination at the Indian Point Unit No. 3 Nuclear Power Plant are:

5.1 Steam Generators 31, 32, 33 & 34
5.2 Residual Heat Exchangers 31 & 32
5.3 Regenerative Heat Exchanger
5.4 Seal Water Heat Exchanger
5.5 Non-Regenerative Letdown Heat Exchanger
5.6 Excess Letdown Heat Exchanger
5.7 Volume Control Tank
5.8 Accumulator Tanks 31, 32, 33 & 34
5.9 Boron Injection Tank
5.10 Seal Water Injection Filters 31 & 32
5.11 Reactor Coolant Filter
5.12 Seal Water Return Filter
5.13 Piping Pressure Boundary
5.14 Residual Heat Removal Pumps 31 & 32
5.15 Safety Injection Pumps 31, 32 & 33
5.16 Charging Pumps 31, 32 & 33
5.17 Valve Pressure Boundary

6.0 Class 2 System Boundaries

The Systems listed below include those Class 2 Systems which have been included in the Indian Point Unit No. 3 Inservice Inspection Program.

System	New York Power Authority Drawing No.
Reactor Coolant System Sheet No. 1	ISI-27383
Reactor Coolant System Sheet No. 2	ISI-27473
Auxiliary Coolant System Sheet No. 1	ISI-27203
Auxiliary Coolant System Sheet No. 2	ISI-27513
Chemical and Volume Control System Sheet No. 1	ISI-27363
Safety Injection System Sheet No. 1	ISI-27353
Safety Injection System Sheet No. 2	ISI-27503
Main Steam	ISI-20173
Steam Generator Blowdown System	ISI-27293
Boiler Feedwater	ISI-20193
Sampling System	ISI-27453
Isolation Valve Seal Water System	ISI-27463

6.1 Class 2 Components which require Volumetric, Surface or Visual examinations are:

6.1.1 Steam Generators 31, 32, 33 and 34
6.1.2 Residual Heat Exchangers 31 & 32
6.1.3 Regenerative Heat Exchanger
6.1.4 Seal Water Heat Exchanger
6.1.5 Non-Regenerative Letdown Heat Exchanger
6.1.6 Excess Letdown Heat Exchanger
6.1.7 Volume Control Tank

6.1.8 Accumulator Tanks 31, 32, 33 & 34
6.1.9 Boron Injection Tank
6.1.10 Seal Water Injection Filters 31 & 32
6.1.11 Reactor Coolant Filter
6.1.12 Seal Water Return Filter
6.1.13 Residual Heat Removal Pumps 31 & 32
6.1.14 Safety Injection Pumps 31, 32 and 33

6.2 Class 2 Piping Pressure Boundary

Portions of the Piping Systems in the Reactor Coolant, Auxiliary Coolant, Safety Injection, Main Steam, Steam Generator Blowdown, Boiler Feedwater, Sampling and Isolation Valve Seal Water are Class 2. Class 2 Piping Pressure Boundaries which require Volumetric, Surface or Visual examination under Category C-F are:

6.2.1 Loop 31 Mainsteam: 31" and 28" Line 2 from Steam Generator to Check Valve MS2; 12" & 8" Lines to Relief Valves MS45, MS46, MS47, MS48 and MS49; 12" Line to Cap and 12" & 6" Line 1020 to Safety Relief Valve PCV1134

6.2.2 Loop 32 Mainsteam: 31" and 28" Line 1 from Steam Generator to Check Valve MS2; 12" & 8" Lines to Relief Valves MS45, MS46, MS47, MS48 and MS49; 12" Line to Cap and 12" and 6" Line 1018 to Safety Relief Valve PCV1135

6.2.3 Loop 33 Mainsteam: 31" and 28" Line 3 from Steam Generator to Check Valve MS2; 12" & 8" Lines to Relief Valves MS45, MS46, MS47, MS48 and MS49; 12" Line to Cap and 12" and 6" Line 1022 to Safety Relief Valve PCV1136

6.2.4 Loop 34 Mainsteam: 31" and 28" Line 4 from Steam Generator to Check Valve MS2; 12" and 8" Lines to Relief Valves MS45, MS46, MS47, MS48 and MS49; 12" Line to Cap and 12" and 6" Line 1024 to Safety Relief Valve PCV1137

6.2.5 Loop 31 18" Feedwater Line 6 to Check Valve BFD6

6.2.6 Loop 32 18" Feedwater Line 5 to Check Valve BFD6

6.2.7 Loop 33 18" Feedwater Line 7 to Check Valve BFD6

6.2.8 Loop 34 18" Feedwater Line 8 to Check Valve BFD6

6.2.9 14" RHR Line 10, 14" RHR Line 653, 14" RHR Line 57 and 12" RHR Line 155 from RHR Pump 31 and RHR Pump 32 to Valves 882, 885B and 730

6.2.10 12" & 8" RHR Line 9 from RHR Heat Exchanger 31 to Valve 883; and 8" RHR Line 9 and 8" RHR Line 654 to RHR Pump 31 and RHR Pump 32 and 8" RHR Line 9 to RHR Heat Exchanger 32

6.2.11 10" & 8" RHR Line 293 from RHR Heat Exchanger 32 to Valve 1802A and Valve 1802B

6.2.12 10" Accumulator Discharge Line 351 from Accumulator Tank 31 to Check Valve 895A

6.2.13 10" Accumulator Discharge Line 352 from Accumulator Tank 32 to Check Valve 895B

6.2.14 10" Accumulator Discharge Line 353 from Accumulator Tank 33 to Check Valve 895C

6.2.15 10" Accumulator Discharge Line 350 from Accumulator Tank 34 to Check Valve 895D

6.2.16 8" RHR Line 93 from RHR Heat Exchanger 32 to Valve 889A; 8" RHR Line 94 from RHR Heat Exchanger 31 to Valve 889B and 6" RHR Line 89 from 8" RHR Line 93 and 8" RHR Line 94 to 8" RHR Line 60. 8" RHR Line 60 to Valve 888A and Valve 888B.

6.2.17 8" RHR Line 355 from 8" RHR Line 94 to 6" RHR Line 356 and 6" RHR Line 355 from 8" RHR Line 355 to Check Valve 838A

6.2.18 8" & 6" RHR Line 358 from 8" RHR Line 93 to Check Valve 838C

6.2.19 8" RHR Line 359 from 8" RHR Line 355 to 8" RHR Line 358

6.2.20 6" RHR Line 356 from 8" RHR Line 355 to Check Valve 838B

6.2.21 6" RHR Line 361 from 8" RHR Line 358 to Check Valve 838D

6.2.22 6" SIS Line 56 from 6" x 2" Reducer to 6" x 4" Reducer

6.2.23 6" SIS Line 550 from Boron Injection Tank to 6" x 4" Reducing Elbow & 6" x 6" x 4" Reducing Tee

6.3 Class 2 Exempt Components

The following Class 2 components and piping or parts of components and piping for Indian Point Unit No. 3 are exempted from Volumetric and Surface examination by ASME Boiler and Pressure Vessel Code-Section XI-1983 Edition thru Summer 1983 Addenda Paragraph IWC-1220 according to the following criteria:

(A) Components of systems or portions of systems that during normal plant operating conditions are not required to operate or perform a system function but remain flooded under static conditions at a pressure of at least 80% of the pressure that the component or system will be subjected to when required to operate.

(B) Components of systems or portions of systems other than Residual Heat Removal Systems and Emergency Core Cooling Systems that are not required to operate above a pressure of 275 psig or above a temperature of 200°F.

(C) Component connections (including nozzles in vessels and pumps), piping and associated valves, and vessels and their attachments that are 4 in. nominal pipe size and smaller.

6.3.1 Although the CVC System is not considered essential to safety in accordance with General Design Criteria No. 1 of 10CFR50, Specific portions of this system will be examined to ASME Boiler and Pressure Vessel Code Section XI-1983 Edition up to and including Summer 1983 Addenda. This is done to satisfy a request of the NRC Regulatory Commission ISI Reviewing Staff to examine the CVC System. This request was made based on NRC's April 1-2, 1980 Review of the 1st Ten Year Interval Inservice Inspection Program and a conference call with the NRC Reviewing Staff on October 2, 1980. During this call, it was agreed that the scope of this Inspection will be limited to Visual and/or Surface examination of selected portions of the CVC System.

6.4 Class 2 Piping and Components which are exempted from Volumetric and Surface examinations by IWC-1220 (B) are:

6.4.1 Safety Injection System Sheet No. 1 Drawing No. ISI-27353

6.4.1.1 8" Containment Spray Line 93 from Valve 889A to Spray Header and 8" Containment Spray Line 94 from Valve 889B to Spray Header have an operating pressure of 210 psig and operating temperature of 140°F.

6.4.1.2 8" Containment Spray Line 15 from Containment Spray Pump 32 to Spray Header and 8" Containment Spray Line 51 from Containment Spray Pump 31 to Spray Header have an operating pressure of 210 psig and operating temperature of 68°.

6.4.1.3 12", 10" and 8" Recirculation Spray Line 91 from Recirculation Pump 32 to Valve 1802B and 12", 10" & 8" Recirculation Spray Line 293 from Recirculation Spray Pump 31 to Valve 1802A and to 8" Line 91 have an operating Pressure of 150 psig and operating temperature of less than 200°F.

6.4.1.4 Recirculation Spray Pumps 31 and 32 have an operating pressure of 150 psig and an operating temperature of less than 200°F.

6.4.2 Safety Injection System Sheet No. 2 Drawing No. ISI-27503

6.4.2.1 12" & 10" Line 181 from Refueling Water Storage Tank to Containment Spray Pump 32 has a design pressure of 240 psig and design temperature of 200°F.

6.4.2.2 10" Line 314 from 12" Line 181 to Containment Spray Pump 31 has a design pressure of 240 psig and design temperature of 200°F.

6.4.2.3 16", 14" and 12" Line 155 from Refueling Water Storage Tank to Valve 882 has a design pressure of 240 psig and design temperature of 200°F.

6.4.2.4 8" Line 190 from 12" Line 155 to Valve 883 has a design pressure of 240 psig and design temperature of 200°F.

6.4.2.5 8" Line 189 from 16" Line 155 to 6" Line 277 has a design pressure of 240 psig and design temperature of 200°F.

6.4.2.6 8" Line 60 from Valves 888A and 888B to 6"Lines 60, 277 and 278 has a design pressure of 240 psig and design temperature of 200°F.

6.4.2.7 6" Line 60 from 8" Line 60 to Safety Injection Pump 33, 6" Line 277 from 8" Line 60 to Safety Injection Pump 32 and 6" Line 278 from 8" Line 60 to Safety Injection Pump 31 have a design pressure of 240 psig and design temperature of 200°F.

6.4.2.8 18" and 14" Line 57 from Containment Sump to Valve 885A has a design pressure of 240 psig and design temperature of 200°F.

6.4.2.9 6" Line 518 from 12" Line 155 to 6" Line 277 has a design pressure of 240 psig and design temperature of 200°F.

6.4.2.10 Refueling Water Storage Tank has an atmospheric operating pressure and operating temperature of 68°F.

6.4.2.11 Containment Spray Pumps 31 and 32 have an operating pressure of 210 psig and operating temperature of 140°F.

6.5 Class 2 Piping and Components which are exempted from volumetric and surface examinations by IWC-1220(c) are:

6.5.1 Reactor Coolant System Sheet No. 2 Drawing No. ISI-27473:

6.5.1.1 All piping not identified in 6.2 and located on ISI-27473 is 4" nominal pipe size and smaller.

6.5.2 Chemical and Volume Control System Sheet No. 1 Drawing No. ISI-27363:

6.5.2.1 All piping not identified in 6.2 and located on ISI-27363 is 4" nominal pipe size and smaller.

6.5.3 Auxiliary Coolant System Sheet No. 1 Drawing No. ISI-27203:

6.5.3.1 All Piping not identified in 6.2 and located on ISI-27203 is 4" nominal pipe size and smaller.

6.5.4 Auxiliary Coolant System Sheet No. 2 Drawing No. ISI-27513

6.5.4.1 All Piping not identified in 6.2 and located on ISI-27513 is 4" nominal pipe size and smaller.

6.5.5 Safety Inspection System Sheet No. 1 Drawing No. ISI-27353

6.5.5.1 All piping not identified in 6.2 or 6.4 and located on ISI-27353 is 4" nominal pipe size and smaller.

6.5.6 Safety Inspection System Sheet No. 2 Drawing No. ISI-27503

6.5.6.1 All piping not identified in 6.2 or 6.4 and located on ISI-27503 is 4" nominal pipe size and smaller.

6.5.7 Main Steam Drawing No. ISI-20173

6.5.7.1 All Piping not identified in 6.2 and located on ISI-20173 is 4" nominal pipe size and smaller.

6.5.8 Steam Generator Blowdown System Drawing No. ISI-27293

6.5.8.1 All piping located on ISI-27293 is 4" nominal pipe size and smaller

6.5.9 Boiler Feedwater Drawing No. ISI-20193

6.5.9.1 All piping not identified in 6.2 and located on ISI-20193 is 4" nominal pipe size and smaller

6.5.10 Sampling System Drawing No. ISI-27453

6.5.10.1 All piping located on ISI-27453 is 4" nominal pipe size and smaller.

6.5.11 Isolation Valve Seal Water System Drawing No. ISI-27463

6.5.11.1 All piping located on ISI-27463 is 4" nominal pipe size and smaller.

CLASS 3 COMPONENTS AND PIPING

7.0 Class 3 Components and Piping have been scheduled for examination in accordance with the regular Inservice Inspection Program outlined in ASME Boiler and Pressure Vessel Code Section XI-1983 Edition thru Summer 1983 Addenda Paragraph IWD-2400. Acceptance standards for flaw indications, repair procedures, system pressure tests and replacements are defined in IWD-3000 (in course of preparation, rules of IWB-3000 may be used), IWD-4000, IWD-5000 and IWD-7000, respectively.

Sections 8.1 and 8.2 are a listing of Class 3 Components and Piping to be examined and Section 8.3 is a listing of those Class 3 components and piping which have been exempted from examination under the provisions of ASME Boiler and Pressure Vessel Code Section XI-1983 Edition thru Summer 1983 Addenda.

The Class 3 Components and Piping requiring examination at the Indian Point Unit No. 3 Nuclear Power Plant are:

7.1 Systems in Support of Reactor Vessel Shutdown Function

7.2 Systems in Support of Emergency Core Cooling, Containment Heat Removal, Atmosphere Cleanup and Reactor Residual Heat Removal

7.3 Systems in Support of Residual Heat Removal from Spent Fuel Storage Pool

8.0 Class 3 System Boundaries

The Systems below include those Class 3 Systems which have been included in the Indian Point Unit 3 Inservice Inspection Program.

System	New York Power Authority Drawing No.
Auxiliary Coolant System Sheet No. 1	ISI-27203
Auxiliary Coolant System Sheet No. 2	ISI-27513
Safety Injection System Sheet No. 2	ISI-27503
Chemical & Volume Control System Sheet No. 1	ISI-27363

System	New York Power Authority Drawing No.
Main Steam	ISI-20173
Steam Generator Blowdown System	ISI-27293
Boiler Feedwater	ISI-20193
Isolation Valve Seal Water System	ISI-27463
Service Water System Nuclear Steam Supply Plant	ISI-27223
Condensate and Boiler Feed Pump Suction	ISI-20183
Waste Disposal System No. 1	ISI-27193

8.1 Class 3 Components which require visual examination of supports are:

8.1.1 Residual Heat Exchangers 31 & 32

8.1.2 Spent Fuel Pool Heat Exchanger 31

8.1.3 Component Cooling Heat Exchangers 31 & 32

8.1.4 Component Cooling Surge Tanks 31 & 32

8.1.5 Residual Heat Removal Pumps 31 & 32 Seal Heat Exchangers

8.1.6 Auxiliary Component Cooling Pumps 31, 32, 33 and 34

8.1.7 Safety Injection Pumps 31, 32 & 33 Oil Coolers

8.1.8 Component Cooling Pumps 31, 32 and 33

8.1.9 Reactor Coolant Pumps 31, 32, 33 and 34 Lube Oil Coolers

8.1.10 Recirculation Spray Pumps 31 and 32 Motor Coolers

8.1.11 Spray Additive Tank 31

8.1.12 Auxiliary Feedwater Turbine Driven Pump 32

8.1.13 Auxiliary Feedwater Motor Driven Pumps 31 & 33

8.1.14 Nuclear Service Water Pumps 34, 35 and 36

8.1.15 Nuclear Service Water Pumps 34, 35 and 36 Strainers

8.1.16 Conventional Service Water Pumps 31, 32 and 33

8.1.17 Conventional Service Water Pumps 31, 32 and 33 Strainers

8.1.18 Diesel Generators 31, 32 and 33 Jacket Water Coolers

8.1.19 Diesel Generators 31, 32 and 33 Lube Oil Coolers

8.1.20 Cooling Water Heat Exchangers 31 and 32

8.1.21 Recirculation Fan Coolers 31, 32, 33, 34 and 35

8.1.22 Condensate Storage Tank

8.1.23 Spent Fuel Pit Pumps 31 and 32

8.1.24 Spent Fuel Pit Strainer

8.1.25 Non-Regenerative Letdown Heat Exchanger 31

8.1.26 Seal Water Heat Exchanger 31

8.1.27 Excess Letdown Heat Exchanger 31

8.1.28 Charging Pumps 31, 32 and 33 Fluid Drive Cooleers

8.1.29 Boric Acid Tanks 31 & 32

8.1.30 Boric Acid Filter 31

8.1.31 Boric Acid Blender

8.1.32 Boric Acid Transfer Pumps 31 & 32

8.2 Class 3 Piping Pressure Boundary

Portions of the Piping Systems in the Auxiliary Coolant, Safety Injection, Mainsteam, Boiler Feedwater, Isolation Valve Seal Water System, Service Water System and Condensate and Boiler Feedpump Suction are Class 3. Class 3 Piping Pressure Boundaries which require visual examination of supports under Categories D-A, D-B and D-C are:

8.2.1 14" Service Water Lines 1081, 1082 and 1083 from Conventional Service Water Pumps 31, 32 and 33 to 24" Service Water Line 409

8.2.2 24" Service Water Line 409 from 14" Service Water Lines 1081, 1082 and 1083 to 8" Valve SWN4, Valve SWN100-4, 20" Line 407 and 18" Line 409

8.2.3 10" Service Water Line 1221 from 24" Line 409 to Valve SWN-7

8.2.4 16" Service Water Line 1219 from 24" Line 409 to Valve SWN112

8.2.5 14" Service Water Lines 1084, 1085 and 1086 from Nuclear Service Water Pumps 34, 35 and 36 to 24" Service Water Line 408

8.2.6 24" Service Water Line 408 from 14" Lines 1084, 1085 and 1086 to 8" Valve SWN-5, Valve SWN100-3, 20" Line 411 and 18" Line 408

8.2.7 10" Service Water Line 1222 from 24" Line 408 to Valve SWN-6

8.2.8 16"Service Water Line 1220 from 24" Line 408 to Valve SWN-111

8.2.9 18" Service Water Line 408 from 24" Line 408 to 10" Service Water Lines 11A, 11B, 11C and 14" Line 408

8.2.10 14" Service Water Line 408 to 10" Service Water Lines 11D and 11E

8.2.11 10" Service Water Line 11E from 14" Line 408 to Recirculation Fan 35

8.2.12 10" Service Water Line 11D from 14" Line 408 to Recirculation Fan 32

8.2.13 10" Service Water Line 11A from 18" Line 408 to Recirculation Fan 31

8.2.14 10" Service Water Line 11B from 18" Line 408 to Recirculation Fan 33

8.2.15 10" Service Water Line 11C from 18" Line 408 to Recirculation Fan 34

8.2.16 20" Service Water Line 411 from 24" Line 408 to Component Cooling Water Heat Exchanger 31 and Valve SWN 33-1

8.2.17 20" Service Water Line 407 from 24" Line 409 to Valve SWN33-1 and 18" Service Water Line 407

8.2.18 18" Service Water Line 407 to Component Cooling Water Heat Exchanger 32

8.2.19 18" Service Water Line 409 from 24" Line 409 to 18" Line 408

8.2.20 24" & 18" Service Water Lines 405 & 509 from Component Cooling Heat Exchangers 31 and 32 to 24" Service Water Line 405

8.2.21 24" Service Water Line 405 to 14" Vent and Discharge Canal

8.2.22 10" Service Water Line 12B from Recirculation Fan 31 to 18" Line 406

8.2.23 10" Service Water Line 12D from Recirculation Fan 32 to 14" Line 406

8.2.24 10" Service Water Line 12A from Recirculation Fan 33 to 18" Line 406

8.2.25 10" Service Water Line 12C from Recirculation Fan 34 to 18" Line 406

8.2.26 10" Service Water Line 12E from Recirculation Fan 35 to 14" Line 406

8.2.27 18" & 14" Service Water Line 406 from 10" Lines 12A, 12B, 12C, 12D and 12E to 18" Line 408, 10" & 8" Line 408 and 24" Line 405

8.2.28 18" Line 408 to 18" Line 406

8.2.29 6" Service Water Lines 1096, 1097 and 1098 from Diesel Generator Jacket Water Coolers 31, 32 and 33 (6" x 4" Red.) to 10" Line 1096

8.2.30 6" Steam Generator Blowdown Line 390 from 24" Line 405 to Valve SWN-53

8.2.31 10" Service Water Line 1096 to 24" Service Water Line 405

8.2.32 6" Service Water Line 1301 from 24" Line 409 to 6" x 4" Red.

8.2.33 6" Service Water Line 1303 from 24" Line 409 to Valve SWN137

8.2.34 6" Service Water Lines 1093 and 1099 from Diesel Generator 31 Lube Oil Cooler (6" x 4" Red.) to 10" Service Water Lines 1093 and 1099

8.2.35 6" Service Water Lines 1094 and 1100 from Diesel Generator 32 Lube Oil Cooler (6" x 4" Red.) to 10" Service Water Lines 1093 and 1099

8.2.36 6" Service Water Lines 1095 and 1101 from Diesel Generator 33 Lube Oil Cooler (6" x 4" Red.) to 10" Service Water Line 1093 and 1099

8.2.37 10" Service Water Lines 1099 from 6" Lines 1099, 1100 and 1101 to 24" Line 408

8.2.38 10" Service Water Line 1093 from 6" Lines 1093, 1094 and 1095 to 24" Line 409

8.2.39 14" Component Cooling Water Line 53 from Component Cooling Water Heat Exchanger 32 to 16" Component Cooling Water Line 53A

8.2.40 16" Component Cooling Water Line 53A to 12" Line 53A to Valve 766C and 10" Line 148 and 14" Line 53A

8.2.41 10" Component Cooling Water Line 148 from 16" Line 53A to 6" Line 148 and Non-Regenerativve Letdown Heat Exchanger 31 and to 8" Line 515

8.2.42 8" Component Cooling Water Line 515 from 10" Line 148 to 6" Line 515 to 6" Cap

8.2.43 14" Component Cooling Water Line 53A from 16" Line 53A to 12" Line 53A to Residual Heat Exchanger 32

8.2.44 6" Component Cooling Water Line 13 from 14" Line 53A to 6" x 4" Reducer

8.2.45 16" & 14" Component Cooling Water Line 53 from Component Cooling Water Heat Exchanger 31 to 8" Line 167 and 14" Line 53

8.2.46 8" Component Cooling Water Line 167 from 16" Line 53 to 6" Line 167 to 6" Cap

8.2.47 14" Component Cooling Water Line 53 from 16" Line 53 to 12" Line 53 to Residual Heat Exchanger 31

8.2.48 12" Component Cooling Water Line 52A from Component Cooling Pumps 32 and 33 to 16" Line 52A and 12" Line 52

8.2.49 12" Component Cooling Water Line 52 from Component Cooling Water Pump 31 to 16" Line 52A

8.2.50 16" Component Cooling Water Line 52 from 16" Line 52A to 14" Line 52 and 8" Line 168

8.2.51 16" Component Cooling Water Line 52A from 12" Line 52A to 14" Line 52A and 10" Line 149

8.2.52 14" Component Cooling Water Line 52A from 16" Line 52A to 12" Line 52A to Residual Heat Exchanger 32

8.2.53 14" Component Cooling Water line 52 from 16" Line 52 to 12" Line 52 to Residual Heat Exchanger 31

8.2.54 8" Component Cooling Water Line 168 from 16" Line 52 to 6" Line 168 to 6" Cap

8.2.55 10" Component Cooling Water Line 149 from 16" Line 52A to 6" Line 149 and Non-Regenerative Letdown Heat Exchanger 31 and to 8" Line 516

8.2.56 8" Component Cooling Water Line 516 from 6" Line 149 to 6" Line 516 to 6" Cap

8.2.57 10" Component Cooling Water Line 199 from Component Cooling Pump 31 to 14" Line 211

8.2.58 10" Component Cooling Water Line 209 from Component Cooling Pump 32 to 14" Line 211

8.2.59 10" Component Cooling Water Line 211 from Component Cooling Pump 33 to 14" Line 211

8.2.60 14" Component Cooling Water Line 211 from 10" Lines 199, 209 and 211 to 14" Line 199 and Component Cooling Heat Exchanger 32

8.2.61 14" Component Cooling Water Line 199 from 14" Line 211 to Component Cooling Heat Exchanger 31

8.2.62 8" Component Cooling Water Line 325 from Spent Fuel Pit Heat Exchanger 31 to 14" Line 52

8.2.63 8" Component Cooling Water Line 326 from Spent Fuel Pit Heat Exchanger 31 to 14" Line 53

8.2.64 6" Component Cooling Water Line 14 from 14" Line 52A to 6" x 4" Reducer

8.2.65 10" Spent Fuel Pit Line 329 from Spent Fuel Pit Pumps 31 and 32 to Spent Fuel Pit

8.2.66 8" Spent Fuel Pit Line 327 from Spent Fuel Pit Pumps 31 & 32 to Spent Fuel Pit Heat Exchanger 31 and 8" Cap

8.2.67 8" Spent Fuel Pit Line 328 from Spent Fuel Pit Heat Exchanger 31 to Spent Fuel Pit, 8" Cap and 8" x 3" Reducer

8.2.68 12" Auxiliary Feedpump Line 1017 from Turbine Driven Auxiliary Feed Pump 32 to Vent

8.2.69 10" & 6" Auxiliary Feedpump 32 Turbine Driven Line 1016 from 4" Valve 52 to Vent

8.2.70 8" Auxiliary Feed Pump Line 1071 from Turbine Driven Auxiliary Feed Pump 32 to 8" Line 1076 and Valve CT28 and 12" Line 1070

8.2.71 12" Auxiliary Feed Pump Line 1070 from 8" Line 1071 to Valve LCV 1158 and Condensate Storage Tank

8.2.72 6" Auxiliary Feed Pump Line 1072 from Motor Driven Auxiliary Feedwater Pump 33 to 6" Line 1074 and Valve CT31 and to 8" Line 1071

8.2.73 6" Auxiliary Feed Pump Line 1073 from Motor Driven Auxiliary Feedwater Pump 31 to 6" Line 1075 and Valve CT25 and to 8" Line 1071

8.2.74 6" Auxiliary Feed Pump Line 1005 from Turbine Driven Auxiliary Feed Pump 32 to 6" Cap

8.2.75 4" & 3" Auxiliary Feedwater Line 1001 from Valve 70 to Motor Driven Auxiliary Feedwater Pump 33 and to 3" Line 1007

8.2.76 3" Auxiliary Feedwater Line 1007 from 4" Line 1001 to 6" Line 1005

8.2.77 4" & 3" Auxiliary Feedwater Line 1002 from Valve 69 to 4" Line 1001 and 3" Line 1008

8.2.78 3" Auxiliary Feedwater Line 1008 from 4" Line 1002 to 6" Line 1005

8.2.79 4" & 3" Auxiliary Feedwater Line 1003 from Valve 68 to Motor Driven Auxiliary Feedwater Pump 31 and 3" Line 1005

8.2.80 3" Auxiliary Feedwater Line 1005 from 4" Line 1003 to 6" Line 1005

8.2.81 4" & 3" Auxiliary Feedwater Line 1004 from Valve 67 to 4" Line 1003 and 3" Line 1006

8.2.82 3" Auxiliary Feedwater Line 1006 from 4" Line 1004 to 6" Line 1005

8.3 Class 3 Exempt Components

The following Class 3 Components and Piping or parts of Components and Piping for Indian Point Unit No. 3 are exempt from Visual examination of Supports by ASME Boiler and Pressure Vessel Code - Section XI - 1983 Edition thru Summer 1983 Addenda Paragraph IWD-1220 according to the following criteria:

IWD-1220.1 Integral attachments of supports and restraints to components that are 4 in. nominal pipe size and smaller within the system boundaries of Examination Categories D-A, D-B and D-C of Table IWD-2500-1 shall be exempt from the visual examination VT-3, except for PWR Auxiliary Feedwater Systems.

IWD-1220.2 Integral attachments of supports and restraints to components exceeding 4 in. nominal pipe size may be exempted from the visual examination VT-3 of Table IWD-2500-1 provided:

(a) the components are located in systems (or portions of systems) whose function is not required in support of reactor residual heat removal, containment heat removal and emergency core cooling; and

(b) the components operate at a pressure of 275 psig or less and at a temperature of 200°F or less.

8.4 Class 3 Piping which are exempted from Visual examinations of Supports by IWD-1220.1 are:

8.4.1 Auxiliary Coolant System Sheet No. 1 Drawing No. ISI-27203

8.4.1.1 All piping not identified in Paragraph 8.2 and located on ISI-27203 is 4 in. nominal pipe size and smaller

8.4.2 Auxiliary Coolant System Sheet No. 2 Drawing No. ISI-27513

8.4.2.1 All piping not identified in Paragraph 8.2 and located on ISI-27513 is 4 in. nominal pipe size and smaller

8.4.3 Safety Injection System Sheet No. 2 Drawing No. ISI-27503

8.4.3.1 All piping located on ISI-27503 is 4 in nominal pipe size and smaller

8.4.4 Chemical & Volume Control System Sheet No. 1 Drawing No. ISI-27363

8.4.4.1 All piping located on ISI-27363 is 4 in. nominal pipe size and smaller.

8.4.5 Main Steam Drawing No. ISI-20173

8.4.5.1 All piping not identified in Paragraph 8.2 and located on ISI-20173 is 4 in. nominal pipe size and smaller

8.4.6 Steam Generator Blowdown System Drawing No. ISI-27293:

8.4.6.1 All piping not identified in Paragraph 8.2 and located on ISI-27293 is 4 in. nominal pipe size and smaller.

8.4.7 Boiler Feedwater Drawing No. ISI-20193

8.4.7.1 All piping not identified in Paragraph 8.2 and located on ISI-20193 is 4 in. nominal pipe size and smaller

8.4.8 Isolation Valve Seal Water System Drawing No. ISI-27463

8.4.8.1 All Piping located on ISI-27463 is 4 in. nominal pipe size and smaller

8.4.9 Service Water System Nuclear Steam Supply Plant Drawing No. ISI-27223

8.4.9.1 All piping not identified in Paragraph 8.2 and located on ISI-27223 is 4 in. nominal pipe size and smaller

8.4.10 Condensate and Boiler Feed Pump Suction Drawing No. ISI-20183

8.4.10.1 All piping not identified in Paragraph 8.2 and located on ISI-20183 is 4 in. nominal pipe size and smaller

8.4.11 Waste Disposal System Sheet No. 1 Drawing No. ISI-27193

8.4.11.1 All piping located on ISI-27193 is 4 in.nominal pipe size and smaller

CLASS 1, 2 and 3 COMPONENT AND PIPING SUPPORTS

9.0 Class 1, 2 and 3 Component and Piping Supports have been scheduled for examination in accordance with the regular Inservice Inspection Program outlined in ASME Boiler and Pressure Vessel Code Section XI-1983 Edition thru Summer 1983 Addenda Paragraph IWF-1200. Acceptance standards for examination evaluations, repair procedures, inservice test requirements, and replacements are defined in Paragraphs IWF-3000, IWF-4000, IWF-5000 and IWF-7000, respectively.

Class 1, 2 and 3 System requiring visual examinations of Component and Piping Supports at the Indian Point Unit No. 3 Nuclear Power Plant are:

9.1 Class 1 Reference Section 4.1 and 4.2

9.2 Class 2 Reference Section 6.1 and 6.2

9.3 Class 3 Reference Section 8.1 and 8.2

ASME Boiler and Pressure Vessel Code Section XI-1983 Edition thru Summer 1983 Addena Paragraph IWF-1230 "Supports Exempt from Examination and Test" is in the course of preparation, Exemptions listed are based on exempt components for IWB-2500-1, IWC-2500-1 and IWD-2500-1.

Class 1, 2 and 3 Systems which are exempt from visual examinations of Component and Piping Supports at the Indian Point Unit No. 3 Nuclear Power Plant are:

9.4 Class 1 Reference Section 4.3.1

9.5 Class 2 Reference Section 6.4 and 6.5

9.6 Class 3 Reference Section 8.4

NEW YORK POWER AUTHORITY
INDIAN POINT UNIT NO. 3
INSERVICE INSPECTION PROGRAM
2ND INTERVAL AUGUST 30, 1986 THRU AUGUST 30, 1996

SECTION XI EDITION: 1983 THRU SUMMER 1983 ADDENDA
COMPONENT: Reactor Vessel RCPCR-V1
CODE CLASS: 1
CODE TABLE: IWB-2500-1

ITEM NO.	EXAM. CAT.	COMPONENT IDENTIFICATION	METHOD OF EXAMINATION	EXTENT OF EXAMINATION 1ST PERIOD	2ND PERIOD	3RD PERIOD	REMARKS
B1.10	B-A	Shell Welds					
B1.11	B-A	Circumferential (2)	Volumetric			1 Beltline Region Weld	Relief Request No. 1
B1.12	B-A	Longitudinal (9)	Volumetric			1 Beltline Region Weld	Relief Request No. 1
B1.20	B-A	Head Welds					
B1.21	B-A	Circumferential (3)	Volumetric			Accessible Length of 1 Weld	Relief Request No. 1 and No. 2
B1.22	B-A	Meridional (12)	Volumetric			Accessible Length of 1 Weld	Relief Request No. 1 and No. 3
B1.30	B-A	Shell to Flange Weld (1)	Volumetric	50% of Weld		50% of Weld	Relief Request No. 1 and No. 4
B1.40	B-A	Head to Flange Weld (1)	Volumetric and Surface	33.3% of Weld	33.3% of Weld	33.3% of Weld	Relief Request No. 1 and No. 5
B1.50	B-A	Repair Welds					
B1.51	B-A	Beltline Region	Not Applicable				Note No. 1
B3.90	B-D	Nozzle to Vessel Welds (8)	Volumetric	4 Nozzles		4 Nozzles	Relief Request No. 1
B3.100	B-D	Nozzle Inside Radius Section (8)	Volumetric	4 Nozzles		4 Nozzles	Relief Request No. 1
B4.10	B-E	Partial Penetration Welds					
B4.11	B-E	Vessel Nozzles	Not Applicable				Note No. 2

SECTION XI EDITION: 1983 THRU SUMMER 1983 ADDENDA
COMPONENT: Reactor Vessel RCPCR-V1
CODE CLASS: 1
CODE TABLE: IWB-2500-1

ITEM NO.	EXAM. CAT.	COMPONENT IDENTIFICATION	METHOD OF EXAMINATION	EXTENT OF EXAMINATION 1ST PERIOD	2ND PERIOD	3RD PERIOD	REMARKS
B4.12	B-E	Control Rod Drive Nozzles (78)	Visual, VT-2			20 Nozzles	
B4.13	B-E	Instrumentation Nozzles (58)	Visual, VT-2			15 Nozzles	
B5.10	B-F	Nominal pipe size equal to or greater than 4 in. nozzle to safe end butt welds	Volumetric and Surface	4 Nozzles		4 Nozzles	Relief Request No. 6
B5.20	B-F	Nominal pipe size less than 4 in. nozzle to safe end butt welds	Not Applicable				Note No. 3
B5.30	B-F	Nozzle to Safe End Socket Welds	Not Applicable				Note No. 4
B6.10	B-G-1	Closure Head Nuts (54)	Surface	18 Nuts	18 Nuts	18 Nuts	
B6.20	B-G-1	Closure Studs, in place	Not Applicable				Note No. 5
B6.30	B-G-1	Closure Studs, when removed (54)	Volumetric and Surface	18 Studs	18 Studs	18 Studs	
B6.40	B-G-1	Threads in Flange (54)	Volumetric	27 Stud Holes		27 Stud Holes	Relief Request No. 7
B6.50	B-G-1	Closure Washers, Bushings (54)	Visual, VT-1	18 Washers	18 Washers	18 Washers	
B7.10	B-G-2	Bolts, Studs and Nuts	Not Applicable				Note No. 6
B7.80	B-G-2	CRD Housings, Bolts, Studs and Nuts (5)	Visual, VT-1	1 Conoseal	2 Conoseals	2 Conoseals	
B8.10	B-H	Integrally Welded Attachments	Not Applicable				Note No. 7

SECTION XI EDITION: 1983 THRU SUMMER 1983 ADDENDA
COMPONENT: Reactor Vessel RCPCR-V1
CODE CLASS: 1
CODE TABLE: IWB-2500-1

ITEM NO.	EXAM. CAT.	COMPONENT IDENTIFICATION	METHOD OF EXAMINATION	EXTENT OF EXAMINATION 1ST PERIOD	2ND PERIOD	3RD PERIOD	REMARKS
B13.10	B-N-1	Vessel Interior	Visual, VT-3	Accessible Areas	Accessible Areas	Accessible Areas	
B13.50	B-N-2	Interior Attachments within Beltline Region	Visual, VT-1			Accessible Areas	
B13.60	B-N-2	Interior Attachments Beyond Beltline Region	Visual, VT-3			Accessible Areas	
B13.70	B-N-3	Core Support Structures	Visual, VT-3			Accessible Areas	
B14.10	B-O	Welds in CRD Housing (78) (33 Peripheral)	Volumetric or Surface			4 Control Rod Drive Housings	
B15.10	B-P	Pressure Retaining Boundary	Visual, VT-2	Each Refueling Outage	Each Refueling Outage	Each Refueling Outage	Relief Request No. 19
B15.11	B-P	Pressure Retaining Boundary	Visual, VT-2			1 Test	Relief Request No. 19

NEW YORK POWER AUTHORITY
INDIAN POINT UNIT NO. 3
INSERVICE INSPECTION PROGRAM
2ND INTERVAL AUGUST 30, 1986 THRU AUGUST 30, 1996

SECTION XI EDITION: 1983 THRU SUMMER 1983 ADDENDA
COMPONENT: Pressurizer RCPCPR1
CODE CLASS: 1
CODE TABLE: IWB-2500-1

ITEM NO.	EXAM. CAT.	COMPONENT IDENTIFICATION	METHOD OF EXAMINATION	EXTENT OF EXAMINATION 1ST PERIOD	2ND PERIOD	3RD PERIOD	REMARKS
B2.10	B-B	Shell to Head Welds					
B2.11	B-B	Circumferential (2)	Volumetric	33.3% One Weld	33.3% One Weld	33.3% One Weld	Relief Request No. 5 and No. 8
B2.12	B-B	Longitudinal (2)	Volumetric	4" One Weld	4" One Weld	4" One Weld	Relief Request No. 5 and No. 8
B2.20	B-B	Head Welds					
B2.21	B-B	Circumferential	Not Applicable				Note No. 8
B2.22	B-B	Meridional	Not Applicable				Note No. 9
B3.110	B-D	Nozzle to Vessel Welds	Not Applicable				Note No. 10
B3.120	B-D	Nozzle Inside Radius Section (6)	Volumetric				Relief Request No. 9
B4.20	B-E	Heater Penetration Welds (78)	Visual, VT-2			78 Welds	
B5.40	B-F	Nominal pipe size equal to or greater than 4 in. nozzle to safe end butt welds (6)	Volumetric and Surface	2 Nozzles	2 Nozzles	2 Nozzles	
B5.50	B-F	Nominal pipe size less than 4 in. nozzle to safe end butt welds	Not Applicable				Note No. 3
B5.60	B-F	Nozzle to Safe End Socket Welds	Not Applicable				Note No. 4
B6.60	B-G-1	Bolts and Studs	Not Applicable				Note No. 11

SECTION XI EDITION: 1983 THRU SUMMER 1983 ADDENDA
COMPONENT: Pressurizer RCPCPR1
CODE CLASS: 1
CODE TABLE: IWB-2500-1

ITEM NO.	EXAM. CAT.	COMPONENT IDENTIFICATION	METHOD OF EXAMINATION	EXTENT OF EXAMINATION 1ST PERIOD	2ND PERIOD	3RD PERIOD	REMARKS
B6.70	B-G-1	Flange Surface, when Connection Disassembled	Not Applicable				Note No. 11
B6.80	B-G-1	Nuts, Bushings and Washers	Not Applicable				Note No. 11
B7.20	B-G-2	Bolts, Studs and Nuts (16)	Visual, VT-1	5 Bolts	5 Bolts	6 Bolts	
B8.20	B-H	Integrally Welded Attachments (2)	Volumetric	33.3% of Each Weld	33.3% of Each Weld	33.3% of Each Weld	Relief Request No. 5
B15.20	B-P	Pressure Retaining Boundary	Visual, VT-2	Each Refueling Outage	Each Refueling Outage	Each Refueling Outage	Relief Request No. 19
B15.21	B-P	Pressure Retaining Boundary	Visual, VT-2			One Test	Relief Request No. 19

NEW YORK POWER AUTHORITY
INDIAN POINT UNIT NO. 3
INSERVICE INSPECTION PROGRAM
2ND INTERVAL AUGUST 30, 1986 THRU AUGUST 30, 1996

SECTION XI EDITION: 1983 THRU SUMMER 1983 ADDENDA
COMPONENT: Steam Generators RCPCSG1-31, RCPCSG2-32, RCPCSG3-33 and RCPCSG4-34
CODE CLASS: 1
CODE TABLE: IWB-2500-1

ITEM NO.	EXAM. CAT.	COMPONENT IDENTIFICATION	METHOD OF EXAMINATION	EXTENT OF EXAMINATION 1ST PERIOD	2ND PERIOD	3RD PERIOD	REMARKS
B2.30	B-B	Head Welds					
B2.31	B-B	Circumferential	Not Applicable				Note No. 8
B2.32	B-B	Meridional	Not Applicable				Note No. 9
B2.40	B-B	Tubesheet to Shell Welds (4)	Volumetric	33.3% One Weld	33.3% One Weld	33.3% One Weld	Relief Request No. 5
B3.130	B-D	Nozzle to Vessel Weld	Not Applicable				Note No. 10
B3.140	B-D	Nozzle Inside Radius Sections (8)	Volumetric				Relief Request No. 5
B5.70	B-F	Nominal pipe size equal to or greater than 4 in. nozzle to safe end butt welds (8)	Volumetric and Surface	2 Nozzles	3 Nozzles	3 Nozzles	Relief Request No. 5
B5.80	B-F	Nominal pipe size less than 4 in. nozzle to safe end butt welds	Not Applicable				Note No. 3
B5.90	B-F	Nozzle to Safe End Socket Welds	Not Applicable				Note No. 4
B6.90	B-G-1	Bolts and Studs	Not Applicable				Note No. 11
B6.100	B-G-1	Flange Surface, when Connection, Disassembled	Not Applicable				Note No. 11
B6.110	B-G-1	Nuts, Bushings, and Washers	Not Applicable				Note No. 11

NEW YORK POWER AUTHORITY
INDIAN POINT UNIT NO. 3
INSERVICE INSPECTION PROGRAM
2ND INTERVAL AUGUST 30, 1986 THRU AUGUST 30, 1996

SECTION XI EDITION: 1983 THRU SUMMER 1983 ADDENDA
COMPONENT: Steam Generators RCPCSG1-31, RCPCSG2-32, RCPCSG3-33 and RCPCSG4-34
CODE CLASS: 1
CODE TABLE: IWB-2500-1

ITEM NO.	EXAM. CAT.	COMPONENT IDENTIFICATION	METHOD OF EXAMINATION	EXTENT OF EXAMINATION 1ST PERIOD	2ND PERIOD	3RD PERIOD	REMARKS
B7.30	B-G-2	Bolts, Studs, and Nuts 32 Studs, 32 Nuts and 64 Washers Each Steam Generator	Visual, VT-1	32 Studs 32 Nuts 64 Washers	48 Studs 48 Nuts 96 Washers	48 Studs 48 Nuts 96 Washers	
B8.30	B-H	Integrally Welded Attachments	Not Applicable				Note No. 7
B15.30	B-P	Pressure Retaining Boundary	Visual, VT-2	Each Refueling Outage	Each Refueling Outage	Each Refueling Outage	Relief Request No. 19
B15.31	B-P	Pressure Retaining Boundary	Visual, VT-2			One Test	Relief Request No. 19
B16.20	B-Q	Steam Generator Tubing in U-Tube Design	Volumetric				Reference INT Technical Specification 4.9

NEW YORK POWER AUTHORITY
INDIAN POINT UNIT NO. 3
INSERVICE INSPECTION PROGRAM
2ND INTERVAL AUGUST 30, 1986 THRU AUGUST 30, 1996

SECTION XI EDITION: 1983 THRU SUMMER 1983 ADDENDA
COMPONENT: Heat Exchangers
CODE CLASS: 1
CODE TABLE: IWB-2500-1

ITEM NO.	EXAM. CAT.	COMPONENT IDENTIFICATION	METHOD OF EXAMINATION	EXTENT OF EXAMINATION 1ST PERIOD	2ND PERIOD	3RD PERIOD	REMARKS
B2.50	B-B	Head Welds					
B2.51	B-B	Circumferential	Not Applicable				Note No. 12
B2.52	B-B	Meridional	Not Applicable				Note No. 12
B2.60	B-B	Tubesheet to Head Welds	Not Applicable				Note No. 12
B2.70	B-B	Longitudinal Welds	Not Applicable				Note No. 12
B2.80	B-B	Tubesheet to Shell Welds	Not Applicable				Note No. 12
B3.150	B-D	Nozzle to Vessel Welds	Not Applicable				Note No. 12
B3.160	B-D	Nozzle Inside Radius Section	Not Applicable				Note No. 12
B5.100	B-F	Nominal pipe size equal to or greater than 4 in. nozzle to safe end butt welds	Not Applicable				Note No. 12
B5.110	B-F	Nominal pipe size less than 4 in. nozzle to safe end butt welds.	Not Applicable				Note No. 12
B5.120	B-F	Nozzle to Safe End Socket Welds	Not Applicable				Note No. 12
B6.120	B-G-1	Bolts and Studs	Not Applicable				Note No. 12
B6.130	B-G-1	Flange Surface, when Connection Disassembled	Not Applicable				Note No. 12

SECTION XI EDITION: 1983 THRU SUMMER 1983 ADDENDA
COMPONENT: Heat Exchangers
CODE CLASS: 1
CODE TABLE: IWB-2500-1

ITEM NO.	EXAM. CAT.	COMPONENT IDENTIFICATION	METHOD OF EXAMINATION	EXTENT OF EXAMINATION 1ST PERIOD	2ND PERIOD	3RD PERIOD	REMARKS
B6.140	B-G-1	Nuts, Bushings, and Washers	Not Applicable				Note No. 12
B7.40	B-G-2	Bolts, Studs and Nuts	Not Applicable				Note No. 12
B8.40	B-H	Integrally Welded Attachments	Not Applicable				Note No. 12
B15.40	B-P	Pressure Retaining Boundary	Not Applicable				Note No. 12
B15.41	B-P	Pressure Retaining Boundary	Not Applicable				Note No. 12

NEW YORK POWER AUTHORITY
INDIAN POINT UNIT NO. 3
INSERVICE INSPECTION PROGRAM
2ND INTERVAL AUGUST 30, 1986 THRU AUGUST 30, 1996

SECTION XI EDITION: 1983 THRU SUMMER 1983 ADDENDA
COMPONENT: Piping
CODE CLASS: 1
CODE TABLE: IWB-2500-1

ITEM NO.	EXAM. CAT.	COMPONENT IDENTIFICATION	METHOD OF EXAMINATION	EXTENT OF EXAMINATION 1ST PERIOD	2ND PERIOD	3RD PERIOD	REMARKS
B5.130	B-F	Nominal pipe size equal to or greater than 4 in. dissimilar metal butt welds	Not Applicable				Note No. 13
B5.140	B-F	Nominal pipe size less than 4 in. dissimilar metal butt welds	Not Applicable				Note No. 14
B5.150	B-F	Dissimilar Metal Socket Welds	Not Applicable				Note No. 15
B6.150	B-G-1	Bolts and Studs	Not Applicable				Note No. 11
B6.160	B-G-1	Flange Surface, when Connection Dissassembled	Not Applicable				Note No. 11
B6.170	B-G-1	Nuts, Bushings and Washers	Not Applicable				Note No. 11
B7.50	B-G-2	Bolts, Studs and Nuts (52)	Visual, VT-1	18 Studs	16 Studs	18 Studs	
B9.10	B-J	Nominal pipe size equal to or greater than 4 in.					
B9.11	B-J	Circumferential Welds (170)	Surface and Volumetric	15 Welds	15 Welds	15 Welds	Relief Request No. 5 & No. 10
B9.12	B-J	Longitudinal Welds (16)	Surface and Volumetric	2 Welds		2 Welds	Relief Request No. 5 & No. 11
B9.20	B-J	Nominal Pipe Size less than 4 in.					

TABLE NO. 4

NEW YORK POWER AUTHORITY
INDIAN POINT UNIT NO. 3
INSERVICE INSPECTION PROGRAM
2ND INTERVAL AUGUST 30, 1986 THRU AUGUST 30, 1996

SECTION XI EDITION: 1983 THRU SUMMER 1983 ADDENDA
COMPONENT: Piping
CODE CLASS: 1
CODE TABLE: IWB-2500-1

ITEM NO.	EXAM. CAT.	COMPONENT IDENTIFICATION	METHOD OF EXAMINATION	EXTENT OF EXAMINATION 1ST PERIOD	2ND PERIOD	3RD PERIOD	REMARKS
B9.21	B-J	Circumferential Welds (85)	Surface	8 Welds	8 Welds	7 Welds	Relief Request No. 5
B9.22	B-J	Longitudinal Welds	Not Applicable				
B9.30	B-J	Branch Pipe Connection Welds					Note No. 16
B9.31	B-J	Nominal pipe size equal to or greater than 4 in. (10)	Surface and Volumetric	1 Weld	1 Weld	1 Weld	Relief Request No. 5
B9.32	B-J	Nominal pipe size less than 4 in. (27)	Surface	2 Welds	2 Welds	3 Welds	Relief Request No. 5
B9.40	B-J	Socket Welds (313)	Surface	27 Welds	27 Welds	27 Welds	Relief Request No. 5
B10.10	B-K-1	Integrally Welded Attachments (7)	Volumetric or Surface	1 Welded Attachment	3 Welded Attachments	3 Welded Attachments	Relief Request No. 5
B15.50	B-P	Pressure Retaining Boundary	Visual, VT-2	Each Refueling Outage	Each Refueling Outage	Each Refueling Outage	Relief Request No. 19
B15.51	B-P	Pressure Retaining Boundary	Visual, VT-2			One Test	Relief Request No. 19

SECTION XI EDITION: 1983 THRU SUMMER 1983 ADDENDA
COMPONENT: Reactor Coolant Pumps RCPCP1-31, RCPCP2-32, RCPCP3-33 and RCPCP4-34
CODE CLASS: 1
CODE TABLE: IWB-2500-1

ITEM NO.	EXAM. CAT.	COMPONENT IDENTIFICATION	METHOD OF EXAMINATION	EXTENT OF EXAMINATION 1ST PERIOD	2ND PERIOD	3RD PERIOD	REMARKS
B6.180	B-G-1	Bolts and Studs - 96 (24 Each Pump)	Volumetric	24 Studs	24 Studs	48 Studs	Relief Request No. 5
B6.190	B-G-1	Flange Surface, when Connection Disassembled	Visual, VT-1	1 Pump	1 Pump	2 Pumps	
B6.200	B-G-1	Nuts, Bushings and Washers	Visual, VT-1	24 Nuts	24 Nuts	48 Nuts	
B7.60	B-G-2	Bolts, Studs and Nuts 72 (18 each pump)	Visual, VT-1	18 Bolts	18 Bolts	36 Bolts	
B10.20	B-K-1	Integrally Welded Attachments-12 (3 each pump)	Volumetric or Surface	3 Welded Attachments	3 Welded Attachments	6 Welded Attachments	Relief Request No. 5
B12.10	B-L-1	Pump Casing Welds-12 (3 each pump)	Volumetric			3 Welds	Relief Request No. 12
B12.20	B-L-2	Pump Casing - 4 (1 each pump)	Visual, VT-3			1 Pump	Relief Request No. 12
B15.60	B-P	Pressure Retaining Boundary	Visual, VT-2	Each Refueling Outage	Each Refueling Outage	Each Refueling Outage	Relief Request No. 19
B15.61	B-P	Pressure Retaining Boundary	Visual, VT-2			One Test	Relief Request No. 19
---	---	Flywheels	Volumetric and Surface	1 Flywheel	1 Flywheel	2 Flywheels	Relief Request No. 13

SECTION XI EDITION: 1983 THRU SUMMER 1983 ADDENDA
COMPONENT: Valves
CODE CLASS: 1
CODE TABLE: IWB-2500-1

ITEM NO.	EXAM. CAT.	COMPONENT IDENTIFICATION	METHOD OF EXAMINATION	EXTENT OF EXAMINATION 1ST PERIOD	2ND PERIOD	3RD PERIOD	REMARKS
B6.210	B-G-1	Bolts and Studs	Not Applicable				Note No. 11
B6.220	B-G-1	Flange Surface, when Connection Disassembled	Not Applicable				Note No. 11
B6.230	B-G-1	Nuts, Bushings and Washers	Not Applicable				Note No. 11
B7.70	B-G-2	Bolts, Studs and Nuts (342)	Visual, VT-1	106 Studs	122 Studs	114 Studs	
B10.30	B-K-1	Integrally Welded Attachments	Not Applicable				Note No. 7
B12.30	B-M-1	Valves, nominal pipe size less than 4 in. valve body welds.	Not Applicable				Note No. 17
B12.40	B-M-1	Valves, nominal pipe size equal to or greater than 4 in. valve body welds	Not Applicable				Note No. 18
B12.50	B-M-2	Valve body, exceeding 4 in. nominal pipe size (17)	Visual, VT-3	2 Valves		2 Valves	Relief Request No. 14
B15.70	B-P	Pressure Retaining Boundary	Visual, VT-2	Each Refueling Outage	Each Refueling Outage	Each Refueling Outage	Relief Request No. 19
B15.71	B-P	Pressure Retaining Boundary	Visual, VT-2			One Test	Relief Request No. 19

NEW YORK POWER AUTHORITY
INDIAN POINT UNIT NO. 3
INSERVICE INSPECTION PROGRAM
2ND INTERVAL AUGUST 30, 1986 THRU AUGUST 30, 1996

SECTION XI EDITION: 1983 THRU SUMMER 1983 ADDENDA
COMPONENT: Steam Generators RCPCSG1-31, RCPCSG2-32, RCPCSG3-33 and RCPCSG4-34
CODE CLASS: 2
CODE TABLE: IWC-2500-1

ITEM NO.	EXAM. CAT.	COMPONENT IDENTIFICATION	METHOD OF EXAMINATION	EXTENT OF EXAMINATION 1ST PERIOD	2ND PERIOD	3RD PERIOD	REMARKS
C1.10	C-A	Shell Circumferential Welds 12 (3 each Steam Generator)	Volumetric	33.3% each of 3 Welds	33.3% each of 3 Welds	33.3% each of 3 Welds	Relief Request No. 15
C1.20	C-A	Head Circumferential Welds 4 (1 each Steam Generator)	Volumetric	33.3% each of 1 Weld	33.3% each of 1 Weld	33.3% each of 1 Weld	Relief Request No. 15
C1.30	C-A	Tubesheet to Shell Welds 4 (1 each Steam Generator)	Volumetric	33.3% each of 1 Weld	33.3% each of 1 Weld	33.3% each of 1 Weld	Relief Request No. 15
C2.10	C-B	Nozzle in vessels equal to or less than 1/2 in. nominal thickness					
C2.11	C-B	Nozzle to shell (or head) Weld	Not Applicable				Note No. 19
C2.20	C-B	Nozzles without reinforcing plate in vessels greater than 1/2 in. nominal thickness					
C2.21	C-B	Nozzle to Shell (or head) Welds 8 (2 each Steam Generator)	Surface and Volumetric		2 Nozzles		Relief Request No. 15
C2.22	C-B	Nozzle Inside Radius Sections 8 (2 each Steam Generator)	Volumetric		2 Nozzles		Relief Request No. 15 & No. 16

SECTION XI EDITION: 1983 THRU SUMMER 1983 ADDENDA
COMPONENT: Steam Generators RCPCSG1-31, RCPCSG2-32, RCPCSG3-33 and RCPCSG4-34
CODE CLASS: 2
CODE TABLE: IWC-2500-1

ITEM NO.	EXAM. CAT.	COMPONENT IDENTIFICATION	METHOD OF EXAMINATION	EXTENT OF EXAMINATION 1ST PERIOD	2ND PERIOD	3RD PERIOD	REMARKS
C2.30	C-B	Nozzles with reinforcing plate in vessels greater than 1/2 in. nominal thickness					
C2.31	C-B	Reinforcing Plate Welds to Nozzle and Vessel	Not Applicable				Note No. 20
C2.32	C-B	Nozzle to Shell (or Head) Welds when inside of Vessel is Accessible	Not Applicable				Note No. 21
C2.33	C-B	Nozzle to Shell (or Head) when inside of Vessel is Inaccessible	Not Applicable				Note No. 22
C3.10	C-C	Integrally Welded Attachments	Not Applicable				Note No. 7
C4.10	C-D	Bolts and Studs	Not Applicable				Note No. 11
C7.10	C-H	Pressure Retaining Components	Visual, VT-2	One Test	One Test	One Test	Relief Request No. 19
C7.20	C-H	Pressure Retaining Components	Visual, VT-2			One Test	Relief Request No. 19

NEW YORK POWER AUTHORITY
INDIAN POINT UNIT NO. 3
INSERVICE INSPECTION PROGRAM
2ND INTERVAL AUGUST 30, 1986 THRU AUGUST 30, 1996

SECTION XI EDITION: 1983 THRU SUMMER 1983 ADDENDA
COMPONENT: Regenerative Heat Exchanger CSAHRG1-31
CODE CLASS: 2
CODE TABLE: IWC-2500-1

ITEM NO.	EXAM. CAT.	COMPONENT IDENTIFICATION	METHOD OF EXAMINATION	EXTENT OF EXAMINATION 1ST PERIOD	2ND PERIOD	3RD PERIOD	REMARKS
C1.10	C-A	Shell Circumferential Welds	Not Applicable				Note No. 23
C1.20	C-A	Head Circumferential Welds (6)	Volumetric	1 Weld		1 Weld	Relief Request No. 15
C1.30	C-A	Tubesheet to Shell Welds (6)	Volumetric	1 Weld		1 Weld	Relief Request No. 15
C2.10	C-B	Nozzle in vessels equal to or less than 1/2 in. nominal thickness					
C2.11	C-B	Nozzle to shell (or head) Weld	Not Applicable				Note No. 19
C2.20	C-B	Nozzles without reinforcing plate in vessels greater than 1/2 in. nominal thickness					
C2.21	C-B	Nozzle to Shell (or head) Weld	Not Applicable				Note No. 24
C2.22	C-B	Nozzle Inside Radius Section	Not Applicable				Note No. 25

TABLE NO. 4

NEW YORK POWER AUTHORITY
INDIAN POINT UNIT NO. 3
INSERVICE INSPECTION PROGRAM
2ND INTERVAL AUGUST 30, 1986 THRU AUGUST 30, 1996

SECTION XI EDITION: 1983 THRU SUMMER 1983 ADDENDA
COMPONENT: Regenerative Heat Exchanger CSAHRG1-31
CODE CLASS: 2
CODE TABLE: IWC-2500-1

ITEM NO.	EXAM. CAT.	COMPONENT IDENTIFICATION	METHOD OF EXAMINATION	EXTENT OF EXAMINATION 1ST PERIOD	2ND PERIOD	3RD PERIOD	REMARKS
C2.30	C-B	Nozzles with reinforcing plate in vessels greater than 1/2 in. nominal thickness					
C2.31	C-B	Reinforcing Plate Welds to Nozzle and Vessel	Not Applicable				Note No. 20
C2.32	C-B	Nozzle to Shell (or Head) Welds when inside of Vessel is Accessible	Not Applicable				Note No. 21
C2.33	C-B	Nozzle to Shell (or Head) when inside of Vessel is Inaccessible	Not Applicable				Note No. 22
C3.10	C-C	Integrally Welded Attachments	Not Applicable				Note No. 7
C4.10	C-D	Bolts and Studs	Not Applicable				Note No. 11
C7.10	C-H	Pressure Retaining Components	Visual, VT-2	One Test	One Test	One Test	Relief Request No. 19
C7.20	C-H	Pressure Retaining Components	Visual, VT-2			One Test	Relief Request No. 19

SECTION XI EDITION: 1983 THRU SUMMER 1983 ADDENDA
COMPONENT: Residual Heat Exchangers ACAHRS1-31 and ACAHRS2-32
CODE CLASS: 2
CODE TABLE: IWC-2500-1

ITEM NO.	EXAM. CAT.	COMPONENT IDENTIFICATION	METHOD OF EXAMINATION	EXTENT OF EXAMINATION 1ST PERIOD	2ND PERIOD	3RD PERIOD	REMARKS
C1.10	C-A	Shell Circumferential Welds 2 (One each Heat Exchanger)	Volumetric	33.3% One Weld	33.3% One Weld	33.3% One Weld	Relief Request No. 15
C1.20	C-A	Head Circumferential Welds 2 (One each Heat Exchanger)	Volumetric	33.3% One Weld	33.3% One Weld	33.3% One Weld	Relief Request No. 15
C1.30	C-A	Tubesheet to Shell Welds	Not Applicable				Note No. 26
C2.10	C-B	Nozzle in vessels equal to or less than 1/2 in. nominal thickness					
C2.11	C-B	Nozzle to shell (or head) Weld	Not Applicable				Note No. 19
C2.20	C-B	Nozzles without reinforcing plate in vessels greater than 1/2 in. nominal thickness					
C2.21	C-B	Nozzle to Shell (or head) Weld	Not Applicable				Note No. 24
C2.22	C-B	Nozzle Inside Radius Section	Not Applicable				Note No. 25

SECTION XI EDITION: 1983 THRU SUMMER 1983 ADDENDA
COMPONENT: Residual Heat Exchangers ACAHRS1-31 and ACAHRS2-32
CODE CLASS: 2
CODE TABLE: IWC-2500-1

ITEM NO.	EXAM. CAT.	COMPONENT IDENTIFICATION	METHOD OF EXAMINATION	EXTENT OF EXAMINATION 1ST PERIOD	2ND PERIOD	3RD PERIOD	REMARKS
C2.30	C-B	Nozzles with reinforcing plate in vessels greater than 1/2 in. nominal thickness					
C2.31	C-B	Reinforcing Plate Welds to Nozzle and Vessel - 4 (2 each Heat Exchanger)	Surface	1 Nozzle		1 Nozzle	Relief Request No. 15
C2.32	C-B	Nozzle to Shell (or Head) Welds when inside of Vessel is Accessible	Not Applicable				Note No. 21
C2.33	C-B	Nozzle to Shell (or Head) when inside of Vessel is Inaccessible - 4 (2 each Heat Exchanger)	Visual, VT-2	1 Nozzle		1 Nozzle	
C3.10	C-C	Integrally Welded Attachments - 4 (2 each Heat Exchanger)	Surface	1 Welded Attachment		1 Welded Attachment	Relief Request No. 15
C4.10	C-D	Bolts and Studs	Not Applicable				Note No. 11
C7.10	C-H	Pressure Retaining Components	Visual, VT-2	One Test	One Test	One Test	Relief Request No. 19
C7.20	C-H	Pressure Retaining Components	Visual, VT-2			One Test	Relief Request No. 19

SECTION XI EDITION: 1983 THRU SUMMER 1983 ADDENDA
COMPONENT: Seal Water Heat Exchanger CSAHSW1-31
CODE CLASS: 2
CODE TABLE: IWC-2500-1

ITEM NO.	EXAM. CAT.	COMPONENT IDENTIFICATION	METHOD OF EXAMINATION	EXTENT OF EXAMINATION 1ST PERIOD	2ND PERIOD	3RD PERIOD	REMARKS
C1.10	C-A	Shell Circumferential Weld (1)	Volumetric	33.3% of Weld	33.3% of Weld	33.3% of Weld	Relief Request No. 15 & No. 17
C1.20	C-A	Head Circumferential Weld (1)	Volumetric	33.3% of Weld	33.3% of Weld	33.3% of Weld	Relief Request No. 15 & No. 17
C1.30	C-A	Tubesheet to Shell Welds	Not Applicable				Note No. 26
C2.10	C-B	Nozzle in vessels equal to or less than 1/2 in. nominal thickness					
C2.11	C-B	Nozzle to shell (or head) Weld	Not Applicable				Note No. 19
C2.20	C-B	Nozzles without reinforcing plate in vessels greater than 1/2 in. nominal thickness					
C2.21	C-B	Nozzle to Shell (or head) Weld	Not Applicable				Note No. 24
C2.22	C-B	Nozzle Inside Radius Section	Not Applicable				Note No. 25

SECTION XI EDITION: 1983 THRU SUMMER 1983 ADDENDA
COMPONENT: Seal Water Heat Exchanger CSAHSW1-31
CODE CLASS: 2
CODE TABLE: IWC-2500-1

ITEM NO.	EXAM. CAT.	COMPONENT IDENTIFICATION	METHOD OF EXAMINATION	EXTENT OF EXAMINATION 1ST PERIOD	2ND PERIOD	3RD PERIOD	REMARKS
C2.30	C-B	Nozzles with reinforcing plate in vessels greater than 1/2 in. nominal thickness					
C2.31	C-B	Reinforcing Plate Welds to Nozzle and Vessel	Not Applicable				Note No. 20
C2.32	C-B	Nozzle to Shell (or Head) Welds when inside of Vessel is Accessible	Not Applicable				Note No. 21
C2.33	C-B	Nozzle to Shell (or Head) when inside of Vessel is Inaccessible	Not Applicable				Note No. 22
C3.10	C-C	Integrally Welded Attachments	Not Applicable				Note No. 7
C4.10	C-D	Bolts and Studs	Not Applicable				Note No. 11
C7.10	C-H	Pressure Retaining Components	Visual, VT-2	One Test	One Test	One Test	Relief Request No. 19
C7.20	C-H	Pressure Retaining Components	Visual, VT-2			One Test	Relief Request No. 19

SECTION XI EDITION: 1983 THRU SUMMER 1983 ADDENDA
COMPONENT: Non Regenerative Letdown Heat Exchanger CSAHNRT-31
CODE CLASS: 2
CODE TABLE: IWC-2500-1

ITEM NO.	EXAM. CAT.	COMPONENT IDENTIFICATION	METHOD OF EXAMINATION	EXTENT OF EXAMINATION 1ST PERIOD	2ND PERIOD	3RD PERIOD	REMARKS
C1.10	C-A	Shell Circumferential Weld (1)	Volumetric	33.3% of Weld	33.3% of Weld	33.3% of Weld	Relief Request No. 15
C1.20	C-A	Head Circumferential Weld (1)	Volumetric	33.3% of Weld	33.3% of Weld	33.3% of Weld	Relief Request No. 15
C1.30	C-A	Tubesheet to Shell Welds	Not Applicable				Note No. 26
C2.10	C-B	Nozzle in vessels equal to or less than 1/2 in. nominal thickness					
C2.11	C-B	Nozzle to shell (or head) Weld	Not Applicable				Note No. 19
C2.20	C-B	Nozzles without reinforcing plate in vessels greater than 1/2 in. nominal thickness					
C2.21	C-B	Nozzle to Shell (or head) Weld	Not Applicable				Note No. 24
C2.22	C-B	Nozzle Inside Radius Section	Not Applicable				Note No. 25

SECTION XI EDITION: 1983 THRU SUMMER 1983 ADDENDA
COMPONENT: Non Regenerative Letdown Heat Exchanger CSAHNRT-31
CODE CLASS: 2
CODE TABLE: IWC-2500-1

ITEM NO.	EXAM. CAT.	COMPONENT IDENTIFICATION	METHOD OF EXAMINATION	EXTENT OF EXAMINATION 1ST PERIOD	2ND PERIOD	3RD PERIOD	REMARKS
C2.30	C-B	Nozzles with reinforcing plate in vessels greater than 1/2 in. nominal thickness					
C2.31	C-B	Reinforcing Plate Welds to Nozzle and Vessel	Not Applicable				Note No. 20
C2.32	C-B	Nozzle to Shell (or Head) Welds when inside of Vessel is Accessible	Not Applicable				Note No. 21
C2.33	C-B	Nozzle to Shell (or Head) when inside of Vessel is Inaccessible	Not Applicable				Note No. 22
C3.10	C-C	Integrally Welded Attachments	Not Applicable				Note No. 7
C4.10	C-D	Bolts and Studs	Not Applicable				Note No. 11
C7.10	C-H	Pressure Retaining Components	Visual, VT-2	One Test	One Test	One Test	Relief Request No. 19
C7.20	C-H	Pressure Retaining Components	Visual, VT-2			One Test	Relief Request No. 19

SECTION XI EDITION: 1983 THRU SUMMER 1983 ADDENDA
COMPONENT: Excess Letdown Heat Exchanger CSAHEL1-31
CODE CLASS: 2
CODE TABLE: IWC-2500-1

ITEM NO.	EXAM. CAT.	COMPONENT IDENTIFICATION	METHOD OF EXAMINATION	EXTENT OF EXAMINATION 1ST PERIOD	2ND PERIOD	3RD PERIOD	REMARKS
C1.10	C-A	Shell Circumferential Weld (1)	Volumetric	33.3% of Weld	33.3% of Weld	33.3% of Weld	Relief Request No. 15
C1.20	C-A	Head Circumferential Weld (1)	Volumetric	33.3% of Weld	33.3% of Weld	33.3% of Weld	Relief Request No. 15
C1.30	C-A	Tubesheet to Shell Welds	Not Applicable				Note No. 26
C2.10	C-B	Nozzle in vessels equal to or less than 1/2 in. nominal thickness					
C2.11	C-B	Nozzle to shell (or head) Weld	Not Applicable				Note No. 19
C2.20	C-B	Nozzles without reinforcing plate in vessels greater than 1/2 in. nominal thickness					
C2.21	C-B	Nozzle to Shell (or head) Weld	Not Applicable				Note No. 24
C2.22	C-B	Nozzle Inside Radius Section	Not Applicable				Note No. 25

SECTION XI EDITION: 1983 THRU SUMMER 1983 ADDENDA
COMPONENT: Excess Letdown Heat Exchanger CSAHEL1-31
CODE CLASS: 2
CODE TABLE: IWC-2500-1

ITEM NO.	EXAM. CAT.	COMPONENT IDENTIFICATION	METHOD OF EXAMINATION	EXTENT OF EXAMINATION 1ST PERIOD	2ND PERIOD	3RD PERIOD	REMARKS
C2.30	C-B	Nozzles with reinforcing plate in vessels greater than 1/2 in. nominal thickness					
C2.31	C-B	Reinforcing Plate Welds to Nozzle and Vessel	Not Applicable				Note No. 20
C2.32	C-B	Nozzle to Shell (or Head) Welds when inside of Vessel is Accessible	Not Applicable				Note No. 21
C2.33	C-B	Nozzle to Shell (or Head) when inside of Vessel is Inaccessible	Not Applicable				Note No. 22
C3.10	C-C	Integrally Welded Attachments	Not Applicable				Note No. 7
C4.10	C-D	Bolts and Studs	Not Applicable				Note No. 11
C7.10	C-H	Pressure Retaining Components	Visual, VT-2	One Test	One Test	One Test	Relief Request No. 19
C7.20	C-H	Pressure Retaining Components	Visual, VT-2	-		One Test	Relief Request No. 19

NEW YORK POWER AUTHORITY
INDIAN POINT UNIT NO. 3
INSERVICE INSPECTION PROGRAM
2ND INTERVAL AUGUST 30, 1986 THRU AUGUST 30, 1996

SECTION XI EDITION: 1983 THRU SUMMER 1983 ADDENDA
COMPONENT: Volume Control Tank CSATVC1-31
CODE CLASS: 2
CODE TABLE: IWC-2500-1

ITEM NO.	EXAM. CAT.	COMPONENT IDENTIFICATION	METHOD OF EXAMINATION	EXTENT OF EXAMINATION 1ST PERIOD	2ND PERIOD	3RD PERIOD	REMARKS
C1.10	C-A	Shell Circumferential Weld	Not Applicable				Note No. 23
C1.20	C-A	Head Circumferential Weld (2)	Volumetric	33.3% of each Weld	33.3% of each Weld	33.3% of each Weld	Relief Request No. 15
C1.30	C-A	Tubesheet to Shell Welds	Not Applicable				Note No. 26
C2.10	C-B	Nozzle in vessels equal to or less than 1/2 in. nominal thickness					
C2.11	C-B	Nozzle to shell (or head) Weld	Not Applicable				Note No. 19
C2.20	C-B	Nozzles without reinforcing plate in vessels greater than 1/2 in. nominal thickness					
C2.21	C-B	Nozzle to Shell (or head) Weld	Not Applicable				Note No. 24
C2.22	C-B	Nozzle Inside Radius Section	Not Applicable				Note No. 25

SECTION XI EDITION: 1983 THRU SUMMER 1983 ADDENDA
COMPONENT: Volume Control Tank CSATVC1-31
CODE CLASS: 2
CODE TABLE: IWC-2500-1

ITEM NO.	EXAM. CAT.	COMPONENT IDENTIFICATION	METHOD OF EXAMINATION	EXTENT OF EXAMINATION 1ST PERIOD	2ND PERIOD	3RD PERIOD	REMARKS
C2.30	C-B	Nozzles with reinforcing plate in vessels greater than 1/2 in. nominal thickness					
C2.31	C-B	Reinforcing Plate Welds to Nozzle and Vessel	Not Applicable				Note No. 20
C2.32	C-B	Nozzle to Shell (or Head) Welds when inside of Vessel is Accessible	Not Applicable				Note No. 21
C2.33	C-B	Nozzle to Shell (or Head) when inside of Vessel is Inaccessible	Not Applicable				Note No. 22
C3.10	C-C	Integrally Welded Attachments	Not Applicable				Note No. 7
C4.10	C-D	Bolts and Studs	Not Applicable				Note No. 11
C7.10	C-H	Pressure Retaining Components	Visual, VT-2	One Test	One Test	One Test	Relief Request No. 19
C7.20	C-H	Pressure Retaining Components	Visual, VT-2			One Test	Relief Request No. 19

SECTION XI EDITION: 1983 THRU SUMMER 1983 ADDENDA
COMPONENT: Accumulator Tanks INTSIATAT1-31, INTSIATAT2-32, INTSIATAT3-33 and INTSIATAT4-34
CODE CLASS: 2
CODE TABLE: IWC-2500-1

ITEM NO.	EXAM. CAT.	COMPONENT IDENTIFICATION	METHOD OF EXAMINATION	EXTENT OF EXAMINATION 1ST PERIOD	2ND PERIOD	3RD PERIOD	REMARKS
C1.10	C-A	Shell Circumferential Welds 4 (1 each Accumulator)	Volumetric	33.3% of 1 Weld	33.3% of 1 Weld	33.3% of 1 Weld	Relief Request No. 15
C1.20	C-A	Head Circumferential Welds 8 (2 each Accumulator)	Volumetric	33.3% each of 2 Welds	33.3% each of 2 Welds	33.3% each of 2 Welds	Relief Request No. 15
C1.30	C-A	Tubesheet to Shell Welds	Not Applicable				Note No. 26
C2.10	C-B	Nozzle in vessels equal to or less than 1/2 in. nominal thickness					
C2.11	C-B	Nozzle to shell (or head) Weld	Not Applicable				Note No. 19
C2.20	C-B	Nozzles without reinforcing plate in vessels greater than 1/2 in. nominal thickness					
C2.21	C-B	Nozzle to Shell (or head) Weld	Not Applicable				Note No. 24
C2.22	C-B	Nozzle Inside Radius Section	Not Applicable				Note No. 25

SECTION XI EDITION: 1983 THRU SUMMER 1983 ADDENDA
COMPONENT: Accumulator Tanks INTSIATAT1-31, INTSIATAT2-32, INTSIATAT3-33 and INTSIATAT4-34
CODE CLASS: 2
CODE TABLE: IWC-2500-1

ITEM NO.	EXAM. CAT.	COMPONENT IDENTIFICATION	METHOD OF EXAMINATION	EXTENT OF EXAMINATION 1ST PERIOD	2ND PERIOD	3RD PERIOD	REMARKS
C2.30	C-B	Nozzles with reinforcing plate in vessels greater than 1/2 in. nominal thickness					
C2.31	C-B	Reinforcing Plate Welds to Nozzle and Vessel	Not Applicable				Note No. 20
C2.32	C-B	Nozzle to Shell (or Head) Welds when inside of Vessel is Accessible	Not Applicable				Note No. 21
C2.33	C-B	Nozzle to Shell (or Head) when inside of Vessel is Inaccessible	Not Applicable				Note No. 22
C3.10	C-C	Integrally Welded Attachments	Not Applicable				Note No. 7
C4.10	C-D	Bolts and Studs	Not Applicable				Note No. 11
C7.10	C-H	Pressure Retaining Components	Visual, VT-2	One Test	One Test	One Test	Relief Request No. 19
C7.20	C-H	Pressure Retaining Components	Visual, VT-2			One Test	Relief Request No. 19

SECTION XI EDITION: 1983 THRU SUMMER 1983 ADDENDA
COMPONENT: Boron Injection Tank INTSIATSI
CODE CLASS: 2
CODE TABLE: IWC-2500-1

ITEM NO.	EXAM. CAT.	COMPONENT IDENTIFICATION	METHOD OF EXAMINATION	EXTENT OF EXAMINATION 1ST PERIOD	2ND PERIOD	3RD PERIOD	REMARKS
C1.10	C-A	Shell Circumferential Welds	Not Applicable				Note No. 23
C1.20	C-A	Head Circumferential Welds (2)	Volumetric	33.3% each of 2 Welds	33.3% each of 2 Welds	33.3% each of 2 Welds	Relief Request No. 15
C1.30	C-A	Tubesheet to Shell Welds	Not Applicable				Note No. 26
C2.10	C-B	Nozzle in vessels equal to or less than 1/2 in. nominal thickness					
C2.11	C-B	Nozzle to shell (or head) Weld	Not Applicable				Note No. 19
C2.20	C-B	Nozzles without reinforcing plate in vessels greater than 1/2 in. nominal thickness					
C2.21	C-B	Nozzle to Shell (or head) Weld	Not Applicable				Note No. 24
C2.22	C-B	Nozzle Inside Radius Section	Not Applicable				Note No. 25

SECTION XI EDITION: 1983 THRU SUMMER 1983 ADDENDA
COMPONENT: Boron Injection Tank INTSIATSI
CODE CLASS: 2
CODE TABLE: IWC-2500-1

ITEM NO.	EXAM. CAT.	COMPONENT IDENTIFICATION	METHOD OF EXAMINATION	EXTENT OF EXAMINATION 1ST PERIOD	2ND PERIOD	3RD PERIOD	REMARKS
C2.30	C-B	Nozzles with reinforcing plate in vessels greater than 1/2 in. nominal thickness					
C2.31	C-B	Reinforcing Plate Welds to Nozzle and Vessel (2)	Surface	1 Nozzle		1 Nozzle	Relief Request No. 15
C2.32	C-B	Nozzle to Shell (or Head) Welds when inside of Vessel is Accessible	Not Applicable				Note No. 21
C2.33	C-B	Nozzle to Shell (or Head) when inside of Vessel is Inaccessible	Visual, VT-2	1 Nozzle		1 Nozzle	
C3.10	C-C	Integrally Welded Attachments	Not Applicable				Note No. 7
C4.10	C-D	Bolts and Studs	Not Applicable				Note No. 11
C7.10	C-H	Pressure Retaining Components	Visual, VT-2	One Test	One Test	One Test	Relief Request No. 19
C7.20	C-H	Pressure Retaining Components	Visual, VT-2			One Test	Relief Request No. 19

SECTION XI EDITION: 1983 THRU SUMMER 1983 ADDENDA
COMPONENT: Seal Water Injection Filters CSFLS1-31 and CSFLS1-32
CODE CLASS: 2
CODE TABLE: IWC-2500-1

ITEM NO.	EXAM. CAT.	COMPONENT IDENTIFICATION	METHOD OF EXAMINATION	EXTENT OF EXAMINATION 1ST PERIOD	2ND PERIOD	3RD PERIOD	REMARKS
C1.10	C-A	Shell Circumferential Welds 2 (One each Filter)	Volumetric	33.3% One Weld	33.3% One Weld	33.3% One Weld	Relief Request No. 15
C1.20	C-A	Head Circumferential Welds 2 (One each Filter)	Volumetric	33.3% One Weld	33.3% One Weld	33.3% One Weld	Relief Request No. 15
C1.30	C-A	Tubesheet to Shell Welds	Not Applicable				Note No. 26
C2.10	C-B	Nozzle in vessels equal to or less than 1/2 in. nominal thickness					
C2.11	C-B	Nozzle to shell (or head) Weld	Not Applicable				Note No. 19
C2.20	C-B	Nozzles without reinforcing plate in vessels greater than 1/2 in. nominal thickness					
C2.21	C-B	Nozzle to Shell (or head) Weld	Not Applicable				Note No. 24
C2.22	C-B	Nozzle Inside Radius Section	Not Applicable				Note No. 25

SECTION XI EDITION: 1983 THRU SUMMER 1983 ADDENDA
COMPONENT: Seal Water Injection Filters CSFLS1-31 and CSFLS1-32
CODE CLASS: 2
CODE TABLE: IWC-2500-1

ITEM NO.	EXAM. CAT.	COMPONENT IDENTIFICATION	METHOD OF EXAMINATION	EXTENT OF EXAMINATION 1ST PERIOD	2ND PERIOD	3RD PERIOD	REMARKS
C2.30	C-B	Nozzles with reinforcing plate in vessels greater than 1/2 in. nominal thickness					
C2.31	C-B	Reinforcing Plate Welds to Nozzle and Vessel	Not Applicable				Note No. 20
C2.32	C-B	Nozzle to Shell (or Head) Welds when inside of Vessel is Accessible	Not Applicable				Note No. 21
C2.33	C-B	Nozzle to Shell (or Head) when inside of Vessel is Inaccessible	Not Applicable				Note No. 22
C3.10	C-C	Integrally Welded Attachments	Not Applicable				Note No. 7
C4.10	C-D	Bolts and Studs	Not Applicable				Note No. 11
C7.10	C-H	Pressure Retaining Components	Visual, VT-2	One Test	One Test	One Test	Relief Request No. 19
C7.20	C-H	Pressure Retaining Components	Visual, VT-2			One Test	Relief Request No. 19

SECTION XI EDITION: 1983 THRU SUMMER 1983 ADDENDA
COMPONENT: Reactor Coolant Filter CSFLRC1-31
CODE CLASS: 2
CODE TABLE: IWC-2500-1

ITEM NO.	EXAM. CAT.	COMPONENT IDENTIFICATION	METHOD OF EXAMINATION	EXTENT OF EXAMINATION 1ST PERIOD	2ND PERIOD	3RD PERIOD	REMARKS
C1.10	C-A	Shell Circumferential Weld (1)	Volumetric	33.3% of Weld	33.3% of Weld	33.3% of Weld	Relief Request No. 15
C1.20	C-A	Head Circumferential Welds (2)	Volumetric	33.3% of 2 Welds	33.3% of 2 Welds	33.3% of 2 Welds	Relief Request No. 15
C1.30	C-A	Tubesheet to Shell Welds	Not Applicable				Note No. 26
C2.10	C-B	Nozzle in vessels equal to or less than 1/2 in. nominal thickness					
C2.11	C-B	Nozzle to shell (or head) Weld	Not Applicable				Note No. 19
C2.20	C-B	Nozzles without reinforcing plate in vessels greater than 1/2 in. nominal thickness					
C2.21	C-B	Nozzle to Shell (or head) Weld	Not Applicable				Note No. 24
C2.22	C-B	Nozzle Inside Radius Section	Not Applicable				Note No. 25

SECTION XI EDITION: 1983 THRU SUMMER 1983 ADDENDA
COMPONENT: Reactor Coolant Filter CSFLRC1-31
CODE CLASS: 2
CODE TABLE: IWC-2500-1

ITEM NO.	EXAM. CAT.	COMPONENT IDENTIFICATION	METHOD OF EXAMINATION	EXTENT OF EXAMINATION 1ST PERIOD	2ND PERIOD	3RD PERIOD	REMARKS
C2.30	C-B	Nozzles with reinforcing plate in vessels greater than 1/2 in. nominal thickness					
C2.31	C-B	Reinforcing Plate Welds to Nozzle and Vessel	Not Applicable				Note No. 20
C2.32	C-B	Nozzle to Shell (or Head) Welds when inside of Vessel is Accessible	Not Applicable				Note No. 21
C2.33	C-B	Nozzle to Shell (or Head) when inside of Vessel is Inaccessible	Not Applicable				Note No. 22
C3.10	C-C	Integrally Welded Attachments	Not Applicable				Note No. 7
C4.10	C-D	Bolts and Studs	Not Applicable				Note No. 11
C7.10	C-H	Pressure Retaining Components	Visual, VT-2	One Test	One Test	One Test	Relief Request No. 19
C7.20	C-H	Pressure Retaining Components	Visual, VT-2			One Test	Relief Request No. 19

SECTION XI EDITION: 1983 THRU SUMMER 1983 ADDENDA
COMPONENT: Seal Water Return Filter CSFLSW1-31
CODE CLASS: 2
CODE TABLE: IWC-2500-1

ITEM NO.	EXAM. CAT.	COMPONENT IDENTIFICATION	METHOD OF EXAMINATION	EXTENT OF EXAMINATION 1ST PERIOD	2ND PERIOD	3RD PERIOD	REMARKS
C1.10	C-A	Shell Circumferential Weld (1)	Volumetric	33.3% of Weld	33.3% of Weld	33.3% of Weld	Relief Request No. 15 & No. 18
C1.20	C-A	Head Circumferential Welds (2)	Volumetric	33.3% of 2 Welds	33.3% of 2 Welds	33.3% of 2 Welds	Relief Request No. 15 & No. 18
C1.30	C-A	Tubesheet to Shell Welds	Not Applicable				Note No. 26
C2.10	C-B	Nozzle in vessels equal to or less than 1/2 in. nominal thickness					
C2.11	C-B	Nozzle to shell (or head) Weld	Not Applicable				Note No. 19
C2.20	C-B	Nozzles without reinforcing plate in vessels greater than 1/2 in. nominal thickness					
C2.21	C-B	Nozzle to Shell (or head) Weld	Not Applicable				Note No. 24
C2.22	C-B	Nozzle Inside Radius Section	Not Applicable				Note No. 25

SECTION XI EDITION: 1983 THRU SUMMER 1983 ADDENDA
COMPONENT: Seal Water Return Filter CSFLSW1-31
CODE CLASS: 2
CODE TABLE: IWC-2500-1

ITEM NO.	EXAM. CAT.	COMPONENT IDENTIFICATION	METHOD OF EXAMINATION	EXTENT OF EXAMINATION 1ST PERIOD	2ND PERIOD	3RD PERIOD	REMARKS
C2.30	C-B	Nozzles with reinforcing plate in vessels greater than 1/2 in. nominal thickness					
C2.31	C-B	Reinforcing Plate Welds to Nozzle and Vessel	Not Applicable				Note No. 20
C2.32	C-B	Nozzle to Shell (or Head) Welds when inside of Vessel is Accessible	Not Applicable				Note No. 21
C2.33	C-B	Nozzle to Shell (or Head) when inside of Vessel is Inaccessible	Not Applicable				Note No. 22
C3.10	C-C	Integrally Welded Attachments	Not Applicable				Note No. 7
C4.10	C-D	Bolts and Studs	Not Applicable				Note No. 11
C7.10	C-H	Pressure Retaining Components	Visual, VT-2	One Test	One Test	One Test	Relief Request No. 19
C7.20	C-H	Pressure Retaining Components	Visual, VT-2			One Test	Relief Request No. 19

SECTION XI EDITION: 1983 THRU SUMMER 1983 ADDENDA
COMPONENT: Piping
CODE CLASS: 2
CODE TABLE: IWC-2500-1

ITEM NO.	EXAM. CAT.	COMPONENT IDENTIFICATION	METHOD OF EXAMINATION	EXTENT OF EXAMINATION 1ST PERIOD	2ND PERIOD	3RD PERIOD	REMARKS
C3.20	C-C	Integrally Welded Attachments (104)	Surface	18 Welded Attachments	48 Welded Attachments	38 Welded Attachments	Relief Request No. 15
C4.20	C-D	Bolts and Studs	Not Applicable				Note No. 11
C5.10	C-F	Piping Welds equal to or less than 1/2 in. nominal thickness					
C5.11	C-F	Circumferential Welds (387)	Surface	27 Welds	27 Welds	27 Welds	Relief Request No. 15
C5.12	C-F	Longitudinal Welds (24)	Surface	2 Welds	2 Welds	2 Welds	Relief Request No. 15
C5.20	C-F	Piping Welds greater than 1/2 in. nominal wall thickness					
C5.21	C-F	Circumferential Welds (343)	Surface and Volumetric	22 Welds	22 Welds	22 Welds	Relief Request No. 15
C5.22	C-F	Longitudinal Welds (8)	Surface and Volumetric	1 Weld	3 Welds	1 Weld	Relief Request No. 15
C5.30	C-F	Pipe Branch Connections greater than 4 in. nominal branch pipe size					
C5.31	C-F	Circumferential Welds (28)	Surface	2 Welds	2 Welds	3 Welds	Relief Request No. 15
C5.32	C-F	Longitudinal Weld	Not Applicable				Note No. 27
C7.30	C-H	Pressure Retaining Components	Visual, VT-2	One Test	One Test	One Test	Relief Request No. 19
C7.40	C-H	Pressure Retaining Components	Visual, VT-2			One Test	Relief Request No. 19

SECTION XI EDITION: 1983 THRU SUMMER 1983 ADDENDA
COMPONENT: Residual Heat Removal Pumps ACAPRH1-31 and ACRPRH2-32
CODE CLASS: 2
CODE TABLE: IWC-2500-1

ITEM NO.	EXAM. CAT.	COMPONENT IDENTIFICATION	METHOD OF EXAMINATION	EXTENT OF EXAMINATION 1ST PERIOD	2ND PERIOD	3RD PERIOD	REMARKS
C3.30	C-C	Integrally Welded Attachments	Not Applicable				Note No. 7
C4.30	C-D	Bolts and Studs	Not Applicable				Note No. 11
C6.10	C-G	Pump Casing Welds	Not Applicable				Note No. 28
C7.50	C-H	Pressure Retaining Components	Visual, VT-2	One Test	One Test	One Test	Relief Request No. 19
C7.60	C-H	Pressure Retaining Components	Visual, VT-2			One Test	Relief Request No. 19

SECTION XI EDITION: 1983 THRU SUMMER 1983 ADDENDA
COMPONENT: Charging Pumps CSAPCH1-31, CSAPCH2-32 and CSAPCH3-33
CODE CLASS: 2
CODE TABLE: IWC-2500-1

ITEM NO.	EXAM. CAT.	COMPONENT IDENTIFICATION	METHOD OF EXAMINATION	EXTENT OF EXAMINATION 1ST PERIOD	2ND PERIOD	3RD PERIOD	REMARKS
C3.30	C-C	Integrally Welded Attachments	Not Applicable				Note No. 7
C4.30	C-D	Bolts and Studs	Not Applicable				Note No. 11
C6.10	C-G	Pump Casing	Not Applicable				Note No. 28
C7.50	C-H	Pressure Retaining Components	Visual, VT-2	One Test	One Test	One Test	Relief Request No. 19
C7.60	C-H	Pressure Retaining Components	Visual, VT-2			One Test	Relief Request No. 19

SECTION XI EDITION: 1983 THRU SUMMER 1983 ADDENDA
COMPONENT: Safety Injection Pumps INTSIAPS11-31, INTSIAPS12-32 and INTSIAPS13-33
CODE CLASS: 2
CODE TABLE: IWC-2500-1

ITEM NO.	EXAM. CAT.	COMPONENT IDENTIFICATION	METHOD OF EXAMINATION	EXTENT OF EXAMINATION 1ST PERIOD	2ND PERIOD	3RD PERIOD	REMARKS
C3.30	C-C	Integrally Welded Attachments	Not Applicable				Note No. 7
C4.30	C-D	Bolts and Studs - 24 (8 each Pump)	Volumetric	2 Bolts	3 Bolts	3 Bolts	
C6.10	C-G	Pump Casing	Not Applicable				Note No. 28
C7.50	C-H	Pressure Retaining Components	Visual, VT-2	One Test	One Test	One Test	Relief Request No. 19
C7.60	C-H	Pressure Retaining Components	Visual, VT-2			One Test	Relief Request No. 19

NEW YORK POWER AUTHORITY
INDIAN POINT UNIT NO. 3
INSERVICE INSPECTION PROGRAM
2ND INTERVAL AUGUST 30, 1986 THRU AUGUST 30, 1996

SECTION XI EDITION: 1983 THRU SUMMER 1983 ADDENDA
COMPONENT: Valves
CODE CLASS: 2
CODE TABLE: IWC-2500-1

ITEM NO.	EXAM. CAT.	COMPONENT IDENTIFICATION	METHOD OF EXAMINATION	EXTENT OF EXAMINATION 1ST PERIOD	2ND PERIOD	3RD PERIOD	REMARKS
C3.40	C-C	Integrally Welded Attachments	Not Applicable				Note No. 7
C4.40	C-D	Bolts and Studs	Not Applicable				Note No. 11
C6.20	C-G	Valve Body Welds	Not Applicable				Note No. 29
C7.70	C-H	Pressure Retaining Components	Visual, VT-2	One Test	One Test	One Test	Relief Request No. 19
C7.80	C-H	Pressure Retaining Components	Visual, VT-2			One Test	Relief Request No. 19

SECTION XI EDITION: 1983 THRU SUMMER 1983 ADDENDA
COMPONENT: Systems in Support of Reactor Shutdown Function
CODE CLASS: 3
CODE TABLE: IWD-2500-1

ITEM NO.	EXAM. CAT.	COMPONENT IDENTIFICATION	METHOD OF EXAMINATION	EXTENT OF EXAMINATION 1ST PERIOD	2ND PERIOD	3RD PERIOD	REMARKS
D1.10	D-A	Pressure Retaining Components	Visual, VT-2	System Pressure Test	System Pressure Test	System Hydrostatic Test	Relief Request No. 19
D1.20	D-A	Integral Attachment - Component Supports and Restraints (3)	Visual, VT-3	1 Attachment	1 Attachment	1 Attachment	
D1.30	D-A	Integral Attachment - Mechanical and Hydraulic Snubbers	Not Applicable				Note No. 30
D1.40	D-A	Integral Attachment - Spring Type Supports	Not Applicable				Note No. 30
D1.50	D-A	Integral Attachment - Constant Load Type Supports	Not Applicable				Note No. 30
D1.60	D-A	Integral Attachment - Shock Absorbers	Not Applicable				Note No. 30

SECTION XI EDITION: 1983 THRU SUMMER 1983 ADDENDA

COMPONENT: Systems in Support of Emergency Core Cooling, Containment Heat Removal, Atmosphere Cleanup and Reactor Residual Heat Removal

CODE CLASS: 3

CODE TABLE: IWD-2500-1

ITEM NO.	EXAM. CAT.	COMPONENT IDENTIFICATION	METHOD OF EXAMINATION	EXTENT OF EXAMINATION 1ST PERIOD	2ND PERIOD	3RD PERIOD	REMARKS
D2.10	D-B	Pressure Retaining Components	Visual, VT-2	System Pressure Test	System Pressure Test	System Hydro-static Test	Relief Request No. 19
D2.20	D-B	Integral Attachment - Component Supports and Restraints (144)	Visual, VT-3	49 Supports	48 Supports	47 Supports	
D2.30	D-B	Integral Attachment - Mechanical and Hydraulic Snubbers (1)	Visual, VT-3	1 Support			
D2.40	D-B	Integral Attachment - Spring Type Supports (7)	Visual, VT-3	3 Supports	2 Supports	2 Supports	
D2.50	D-B	Integral Attachment - Constant Load Type Supports	Not Applicable				Note No. 30
D2.60	D-B	Integral Attachment - Shock Absorbers	Not Applicable				Note No. 30

SECTION XI EDITION: 1983 THRU SUMMER 1983 ADDENDA
COMPONENT: Systems in Support of Residual Heat Removal from Spent Fuel Storage Pool
CODE CLASS: 3
CODE TABLE: IWD-2500-1

ITEM NO.	EXAM. CAT.	COMPONENT IDENTIFICATION	METHOD OF EXAMINATION	EXTENT OF EXAMINATION 1ST PERIOD	2ND PERIOD	3RD PERIOD	REMARKS
D3.10	D-C	Pressure Retaining Components	Visual, VT-2	System Pressure Test	System Pressure Test	System Hydro-static Test	Relief Request No. 19
D3.20	D-C	Integral Attachment - Component Supports and Restraints (6)	Visual, VT-3	2 Supports	2 Supports	2 Supports	
D3.30	D-C	Integral Attachment - Mechanical and Hydraulic Snubbers	Not Applicable				Note No. 30
D3.40	D-C	Integral Attachment - Spring Type Supports	Not Applicable				Note No. 30
D3.50	D-C	Integral Attachment - Constant Load Type Supports	Not Applicable				Note No. 30
D3.60	D-C	Integral Attachment - Shock Absorbers	Not Applicable				Note No. 30

SECTION XI EDITION: 1983 THRU SUMMER 1983 ADDENDA
COMPONENT: Plate and Shell Type Supports
CODE CLASS: 1
CODE TABLE: IWF-2500-1

ITEM NO.	EXAM. CAT.	COMPONENT IDENTIFICATION	METHOD OF EXAMINATION	EXTENT OF EXAMINATION 1ST PERIOD	2ND PERIOD	3RD PERIOD	REMARKS
F1.10	F-A	Mechanical Connections to Pressure Retaining Components and Building Structure	Not Applicable				Note No. 31
F1.20	F-A	Weld Connections to Building Structure	Not Applicable				Note No. 31
F1.30	F-A	Weld and Mechanical Connections at intermediate joints in multiconnected integral and non-integral supports (1)	Visual, VT-3	33.3% of Support	33.3% of Support	33.3% of Support	
F1.40	F-A	Component displacement settings of guides and stops, misalignment of supports, assembly of support items.	Not Applicable				Note No. 31

SECTION XI EDITION: 1983 THRU SUMMER 1983 ADDENDA
COMPONENT: Linear Type Supports
CODE CLASS: 1
CODE TABLE: IWF-2500-1

ITEM NO.	EXAM. CAT.	COMPONENT IDENTIFICATION	METHOD OF EXAMINATION	EXTENT OF EXAMINATION 1ST PERIOD	2ND PERIOD	3RD PERIOD	REMARKS
F2.10	F-B	Mechanical Connections to Pressure Retaining Components and Building Structure	Not Applicable				Note No. 32
F2.20	F-B	Weld Connections to Building Structure	Not Applicable				Note No. 32
F2.30	F-B	Weld and Mechanical Connections at intermediate joints in multiconnected integral and non-integral supports	Not Applicable				Note No. 32
F2.40	F-B	Component displacement settings of guides and stops, misalignment of supports, assembly of support items.	Not Applicable				Note No. 32

SECTION XI EDITION: 1983 THRU SUMMER 1983 ADDENDA
COMPONENT: Component Standard Supports
CODE CLASS: 1
CODE TABLE: IWF-2500-1

ITEM NO.	EXAM. CAT.	COMPONENT IDENTIFICATION	METHOD OF EXAMINATION	EXTENT OF EXAMINATION 1ST PERIOD	2ND PERIOD	3RD PERIOD	REMARKS
F3.10	F-C	Mechanical Connections to Pressure Retaining Components and Building Structure	Visual, VT-3	33.3%	33.3%	33.3%	
F3.20	F-C	Weld Connections to Building Structure	Visual, VT-3	33.3%	33.3%	33.3%	
F3.30	F-C	Weld and Mechanical Connections at intermediate joints in multiconnected integral and non-integral supports	Visual, VT-3	33.3%	33.3%	33.3%	
F3.40	F-C	Component displacement settings of guides and stops, misalignment of supports, assembly of support items.	Visual, VT-3	33.3%	33.3%	33.3%	
F3.50	F-C	Spring type supports, constant load type supports, shock absorbers, hydraulic and mechanical type snubbers.	Visual, VT-4	33.3%	33.3%	33.3%	

SECTION XI EDITION: 1983 THRU SUMMER 1983 ADDENDA
COMPONENT: Plate an Shell Type Supports
CODE CLASS: 2
CODE TABLE: IWF-2500-1

ITEM NO.	EXAM. CAT.	COMPONENT IDENTIFICATION	METHOD OF EXAMINATION	EXTENT OF EXAMINATION 1ST PERIOD	2ND PERIOD	3RD PERIOD	REMARKS
F1.10	F-A	Mechanical Connections to Pressure Retaining Components and Building Structure	Not Applicable				Note No. 31
F1.20	F-A	Weld Connections to Building Structure	Not Applicable				Note No. 31
F1.30	F-A	Weld and Mechanical Connections at intermediate joints in multiconnected integral and non-integral supports (4)	Visual, VT-3	1 Support	1 Support	2 Supports	
F1.40	F-A	Component displacement settings of guides and stops, misalignment of supports, assembly of support items.	Not Applicable				Note No. 31

SECTION XI EDITION: 1983 THRU SUMMER 1983 ADDENDA
COMPONENT: Linear Type Supports
CODE CLASS: 2
CODE TABLE: IWF-2500-1

ITEM NO.	EXAM. CAT.	COMPONENT IDENTIFICATION	METHOD OF EXAMINATION	EXTENT OF EXAMINATION 1ST PERIOD	2ND PERIOD	3RD PERIOD	REMARKS
F2.10	F-B	Mechanical Connections to Pressure Retaining Components and Building Structure	Not Applicable				Note No. 32
F2.20	F-B	Weld Connections to Building Structure	Not Applicable				Note No. 32
F2.30	F-B	Weld and Mechanical Connections at intermediate joints in multiconnected integral and non-integral supports	Not Applicable				Note No. 32
F2.40	F-B	Component displacement settings of guides and stops, misalignment of supports, assembly of support items.	Not Applicable				Note No. 32

SECTION XI EDITION: 1983 THRU SUMMER 1983 ADDENDA
COMPONENT: Component Standard Supports
CODE CLASS: 2
CODE TABLE: IWF-2500-1

ITEM NO.	EXAM. CAT.	COMPONENT IDENTIFICATION	METHOD OF EXAMINATION	EXTENT OF EXAMINATION 1ST PERIOD	2ND PERIOD	3RD PERIOD	REMARKS
F3.10	F-C	Mechanical Connections to Pressure Retaining Components and Building Structure	Visual, VT-3	33.3%	33.3%	33.3%	
F3.20	F-C	Weld Connections to Building Structure	Visual, VT-3	33.3%	33.3%	33.3%	
F3.30	F-C	Weld and Mechanical Connections at intermediate joints in multiconnected integral and non-integral supports	Visual, VT-3	33.3%	33.3%	33.3%	
F3.40	F-C	Component displacement settings of guides and stops, misalignment of supports, assembly of support items.	Visual, VT-3	33.3%	33.3%	33.3%	
F3.50	F-C	Spring type supports, constant load type supports, shock absorbers, hydraulic and mechanical type snubbers.	Visual, VT-4	33.3%	33.3%	33.3%	

SECTION XI EDITION: 1983 THRU SUMMER 1983 ADDENDA
COMPONENT: Plate and Shell Type Supports
CODE CLASS: 3
CODE TABLE: IWF-2500-1

ITEM NO.	EXAM. CAT.	COMPONENT IDENTIFICATION	METHOD OF EXAMINATION	EXTENT OF EXAMINATION 1ST PERIOD	2ND PERIOD	3RD PERIOD	REMARKS
F1.10	F-A	Mechanical Connections to Pressure Retaining Components and Building Structure	Not Applicable				Note No. 31
F1.20	F-A	Weld Connections to Building Structure	Not Applicable				Note No. 31
F1.30	F-A	Weld and Mechanical Connections at intermediate joints in multiconnected integral and non-integral supports	Not Applicable				Note No. 31
F1.40	F-A	Component displacement settings of guides and stops, misalignment of supports, assembly of support items.	Not Applicable				Note No. 31

SECTION XI EDITION: 1983 THRU SUMMER 1983 ADDENDA
COMPONENT: Linear Type Supports
CODE CLASS: 3
CODE TABLE: IWF-2500-1

ITEM NO.	EXAM. CAT.	COMPONENT IDENTIFICATION	METHOD OF EXAMINATION	EXTENT OF EXAMINATION 1ST PERIOD	2ND PERIOD	3RD PERIOD	REMARKS
F2.10	F-B	Mechanical Connections to Pressure Retaining Components and Building Structure	Not Applicable				Note No. 32
F2.20	F-B	Weld Connections to Building Structure	Not Applicable				Note No. 32
F2.30	F-B	Weld and Mechanical Connections at intermediate joints in multiconnected integral and non-integral supports	Not Applicable				Note No. 32
F2.40	F-B	Component displacement settings of guides and stops, misalignment of supports, assembly of support items.	Not Applicable				Note No. 32

SECTION XI EDITION: 1983 THRU SUMMER 1983 ADDENDA
COMPONENT: Component Standard Supports
CODE CLASS: 3
CODE TABLE: IWF-2500-1

ITEM NO.	EXAM. CAT.	COMPONENT IDENTIFICATION	METHOD OF EXAMINATION	EXTENT OF EXAMINATION 1ST PERIOD	2ND PERIOD	3RD PERIOD	REMARKS
F3.10	F-C	Mechanical Connections to Pressure Retaining Components and Building Structure	Visual, VT-3	33.3%	33.3%	33.3%	Relief Request No. 20
F3.20	F-C	Weld Connections to Building Structure	Visual, VT-3	33.3%	33.3%	33.3%	Relief Request No. 20
F3.30	F-C	Weld and Mechanical Connections at intermediate joints in multiconnected integral and non-integral supports	Visual, VT-3	33.3%	33.3%	33.3%	Relief Request No. 20
F3.40	F-C	Component displacement settings of guides and stops, misalignment of supports, assembly of support items.	Visual, VT-3	33.3%	33.3%	33.3%	Relief Request No. 20
F3.50	F-C	Spring type supports, constant load type supports, shock absorbers, hydraulic and mechanical type snubbers.	Visual, VT-4	33.3%	33.3%	33.3%	Relief Request No. 20

NOTES:

1. There are no weld repair areas in the reactor vessel beltline region.
2. There are no partial penetration reactor vessel nozzle welds.
3. There are no nominal pipe size less than 4 in. nozzle to safe-end butt welds.
4. There are no nozzle to safe-end socket welds.
5. Reactor vessel closure heads studs are removed during refueling outages and will be examined under Item. No. B6.30.
6. There are no bolts, studs and nuts 2 in. or less.
7. There are no integrally welded attachments.
8. There are no circumferential head welds.
9. There are no meridional head welds.
10. There are no nozzle to vessel welds.
11. There are no bolts or studs greater than 2 in.
12. There are no Class 1 heat exchangers other than the steam generators.
13. There are no nominal pipe size equal to or greater than 4 in. dissimilar metal butt welds.
14. There are no nominal pipe size less than 4 in. dissimilar metal butt welds.
15. There are no dissimilar metal socket welds.
16. There are no longitudinal pipe welds.
17. There are no valves, nominal pipe size less than 4 in. valve body welds.
18. There are no valves, nominal pipe size equal to or greater than 4 in. valve body welds.
19. There are no nozzle to shell (or head) weld in vessels equal to or less than 1/2 in. nominal thickness.
20. There are no reinforcing plate welds to nozzle and vessel in vessels greater than 1/2 in. nominal thickness.
21. There are no nozzle to shell (or head) welds when inside of vessel is accessible in vessels greater than 1/2 in. nominal thickness.
22. There are no nozzle to shell (or head) welds when inside of vessel is inaccessible in vessels greater than 1/2 in. nominal thickness.
23. There are no shell circumferential welds.
24. There are no nozzle to shell (or head) welds without reinforcing plate in vessels greater than 1/2 in. nominal thickness.
25. There are no nozzle inside radius section without reinforcing plate in vessels greater than 1/2 in. nominal thickness.
26. There are no tubesheet to shell welds.
27. There are no longitudinal welds on pipe branch connections greater than 4 in. nominal branch pipe size.

28. There are no pump casing welds.
29. There are no valve body welds.
30. There are no Class 3 Integral Attachments in this Item No. and Examination Category.
31. There are no Class 1, Class 2 or Class 3 Plate and Shell Type Supports in this Item No. and Examination Category.
32. There are no Class 1, Class 2 or Class 3 Linear Type Supports in this Item No. and Examination Category.

SECTION XI EDITION:	1983 THRU SUMMER 1983 ADDENDA
COMPONENT:	Reactor Vessel RCPCR-V1 Shell Circumferential (2) and Longitudinal (9) Welds; Head Circumferential (3) and Meridional Welds (12); Shell to Flange Weld; Head to Flange Weld; Nozzle to Vessel Welds (8) and Nozzle Inside Radius Sections (8).
CODE CLASS:	1
CODE TABLE:	IWB-2500-1
CODE CATEGORY:	B-A; B-A; B-A; B-A; B-A; B-A; B-D; B-D
CODE ITEM NO.:	B1.11; B1.12; B1.21; B1.22; B1.30; B1.40; B3.90; B3.100
EXAMINATION REQUIREMENT:	Alternate volumetric examination per United States Nuclear Regulatory Commission Regulatory Guide 1.150 Rev. 1
BASIS FOR RELIEF:	Reference attached Westinghouse NSID Position Paper on United States Nuclear Regulatory Commission "Regulatory Guide 1.150 Rev. 1."
ALTERNATIVE EXAMINATION:	Reference attached Westinghouse NSID Position Paper on United States Nuclear Regulatory Commission "Regulatory Guide 1.150 Rev. 1."

APPLICATION OF REGULATORY GUIDE 1.150
AT THE
INDIAN POINT UNIT NO. 3 NUCLEAR POWER PLANT

INTRODUCTION

The following paragraphs describe the extent to which the recommendations of USNRC Regulatory Guide 1.150, "Ultrasonic Testing of Reactor Vessel Welds During Preservice and Inservice Examination," are applied during execution of Reactor Vessel examinations at New York Power Authority's Indian Point Unit No. 3 Nuclear Power Plant. The basis for implementation of the document is Appendix A to Revision 1 of Regulatory Guide 1.150, dated February 1983, where the recommendations of the Electric Power Research Institute are adopted as an acceptable approach to the base document.

REMOTE ULTRASONIC EXAMINATIONS OF REACTOR VESSEL NOZZLE INNER RADIUS; SHELL, FLANGE, NOZZLE AND BOTTOM HEAD WELDS

1.0 INSTRUMENT PERFORMANCE CHECKS

Paragraphs 1.1a and 1.1b recommend records of the RF (radiofrequency) pulse waveform from a reference reflector be obtained for each search unit in a manner which will provide frequency-amplitude information. The procedures and equipment used for this process must be documented and the checks are to be made within six months prior to performing reactor vessel examinations.

The recommendations of paragraphs 1.1a and 1.1b are met via implementation of paragraph 1.2c of the Regulatory Guide, wherein it is recommended that records of the RF pulse waveform be made before and after examining all welds that must be examined during one outage. Photographic records of the RF pulse waveform are made prior to reactor vessel examinations during the calibration process and on site after reactor vessel examinations are completed. Results are documented and maintained in the reactor vessel examination data package.

1.2 FIELD PERFORMANCE CHECKS

Paragraph 1.2a recommends that RF waveforms, screen height and amplitude control linearity, and angle beam profile characterization be verified before and after examining all welds that must be examined during one outage.

The recommendations of paragraph 1.2a are met with the exception of angle beam profile characterization, which is performed prior to reactor vessel examinations only, during the calibration sequence. Only in the event significant reflectors are detected with a transducer would these measurements be made after examinations are completed.

Paragraph 1.2b recommends the instrument sensitivity during performance of the amplitude control linearity verification be at the calibration sensitivity or at some point between the calibration sensitivity and the scanning sensitivity.

The recommendations of paragraph 1.2b are met as amplitude control linearity verification is performed at the calibration sensitivity. These verifications are documented in the calibration data package.

Paragraph 1.2c recommends records of the RF (radiofrequency) pulse waveform from a reference reflector be obtained and recorded in a manner that will permit extraction of frequency-amplitude information.

The recommendations of paragraph 1.2c are met. Photographic records of the RF waveforms are collected for each transducer in a manner in which frequency-amplitude information can be extracted before the vessel examination, during the calibration sequence, and after the vessel examinations are completed. Results are documented and maintained in the reactor vessel examination data package.

Paragraph 1.2d recommends verification of screen height linearity according to the requirements of Appendix I, Article 4, of Section V of the ASME Boiler and Pressure Vessel Code.

The recommendations of paragraph 1.2d are met. Screen height linearity is verified prior to the calibration sequence and before and after each series of Reactor Vessel examinations performed in one outage. Documentation of these verifications is maintained in the Reactor Vessel examination data package.

Paragraph 1.2e recommends verification of amplitude control linearity according to Appendix II, Article 4, of Section V of the ASME Boiler and Pressure Vessel Code.

The recommendations of paragraph 1.2e are met. Amplitude control linearity is verified prior to the calibration sequence and before and after each series of reactor vessel examinations performed in one outage. Documentation of these verifications is maintained in the reactor vessel examination data package.

Paragraph 1.2f recommends the vertical beam profile be determined for each search unit used during the examination by a procedure similar to that outlined in Article 4 of Section V of the ASME Boiler and pressure Vessel Code.

The recommendations of paragraph 1.2f are met. All angle beam search units are characterized in terms of beam profile by collecting sweep and transducer location data at 20 percent DAC and 50 percent DAC limits during the calibration sequence. Documentation of these characterizations is maintained in the reactor vessel examination data package.

2.0 CALIBRATION

This paragraph recommends calibration be performed to establish the distance-amplitude-curve and sweep range calibration in accordance with Article 4, Section V of the ASME Boiler and Pressure Vessel Code. Calibration confirmation is recommended before and after each examination or each week the system is in use, whichever is less. It is also recommended, where possible, the same calibration block be used for successive vessel examinations.

The recommendations of paragraph 2.0 are met. Calibrations for vessel examinations are established per Article 4, Section V of the ASME Boiler and Pressure Vessel Code, calibration confirmation is performed within specified intervals, and the same calibration blocks are used for successive examinations of the reactor vessel where possible. All calibration data are documented and maintained in the reactor vessel examination data package.

Paragraph 2.1 recommends static calibrations for instances where sizing is performed using static transducers. When signals are maximized during calibration, they should also be maximized during sizing. Reference hole detection should be shown at the scanning speed.

The recommendations of paragraph 2.1 are met. manual calibrations and sizing are performed statically, signals are maximized during calibration and sizing, and manual scanning is performed at 2X to 5X the calibration level to assure reflector detection during the examination process.

Paragraph 2.2 provides recommendations for various options intended to assure adequate detection during mechanized scanning. Options include:

1) dynamic calibration using the scanning mechanism used for vessel examinations or a mechanism that duplicates critical parameters of the actual vessel scanner,

2) employing a calibration speed at or greater than the vessel scanning speed, and

3) development of correction factors between static and dynamic responses.

The recommendations of paragraph 2.2 are met. Calibration procedures specify transducers be mounted on the array plate which will be used for the reactor vessel examinations. The array plate is manipulated on a device which simulates the motions of the actual reactor vessel inspection device. Distance-amplitude curves are developed statically and verified dynamically at or higher than the specified scanning speed for the vessel.

2.3 CALIBRATION CONFIRMATION

This paragraph provides recommendations concerning the performance of mid-shift or interim confirmations of calibration. The stability requirements of paragraph T-433, Article 4, Section V of the ASME Boiler and Pressure Vessel Code are referenced. When electronic simulators are used, it is recommended that target reflectors be used to supplement simulator checks. A minimum of two targets separated by a distance representing 75 percent of maximum thickness should be used for the supplementary checks. Written records of the calibrations should be developed for both the target reflector responses and the Code calibration block distance-amplitude curves for each transducer.

Finally, it is recommended that measures be taken to ensure environmental control of the calibrated electronics.

The recommendations of paragraph 2.3 are met. System calibration is confirmed, as a minimum, before and after each series of reactor vessel examinations performed with a particular transducer array plate. In addition, instrument stability is verified as a minimum once each shift using an Electronic Block Simulator (EBS). Complete ultrasonic system performance is confirmed using an array of cylindrical reflectors called a Mechanical Calibration Transfer Standard. Responses from reflectors in the array are referenced to the distance-amplitude curves generated with the basic calibration blocks per Article 4 of Section V of the ASME Boiler and Pressure Vessel Code. The design of the array allows at least a two-point check of sweep and sensitivity. Typically, a minimum of three reflectors are selected for verification which appear at transit times representative of the primary reflectors in the basic calibration block. Written records are developed for the Electronic Block Simulator information, the target reflector responses, and the distance-amplitude-curves for each search unit/inspection channel combination. All instrumentation is protected from temperature, vibration, and shock via the trailer mounted control center which employs provisions for shock mounting and environmental control.

2.4 CALIBRATION BLOCKS

This paragraph recommends calibration block designs comply with Article 4, Section V of the ASME Boiler and Pressure Vessel Code. When alternative or new blocks are used, a comparison of acoustic response with blocks used previously is recommended. Block and reference reflector surfaces should be protected during storage and should not be modifed between successive examinations. If blocks or reflector surfaces are modified in any way, these modifications should be documented.

The recommendations of this paragraph are met. Basic calibration blocks are designed per the requirements of Article 4, Section V of the ASME Boiler and Pressure Vessel Code. Block surfaces and surfaces of reference reflectors are protected, and block modifications are not permitted without prior approval and documentation.

3.0 EXAMINATION

This paragraph recommends the scope and extent of the ultrasonic examinations performed comply with IWA-2000, Section XI of the ASME Boiler and Pressure Vessel Code. Furthermore, if electronic gating is used the entire required thickness should be within the gated region. If single gates are used, they should be capable of recording multiple indications within the gate. Finally, examinations should be conducted with a minimum of 25 percent overlap based on the transducer element size.

The recommendations of paragraph 3.0 are met. The scope and extent of examinations performed are selected based upon IWA-2000, Section XI of the ASME Boiler and Pressure Vessel Code. Electronic gating, capable of detecting up to four indications appearing simultaneously within the range, is applied. Gates are set to include the entire examination volume to the extent practical. Examinations are conducted with a minimum of 25 percent overlap based upon transducer element size. Typically, a 50 percent scan overlap is applied.

Paragraph 3.1 provides recommendations for interrogration of the internal clad/base metal interface region of the reactor vessel. Procedures fo examining this region should be capable of detecting the 2 percent, 90 degree corner reflector which penetrates the clad surface of the calibration block defined by Article 4, Section V of the ASME Boiler and Pressure Vessel Code. Alternate reflectors are permissible provided they are located in the clad/base metal interface region, do not exceed the maximum allowable defect size, and are demonstrated to provide equivalent or superior results. The volume of interest is defined as one inch of metal as measured perpendicular to the nominal location of the clad/base metal interface.

The recommendations of paragraph 3.1 are met by application of examination procedures for supplementing Code required examinations with techniques specifically intended to interrogate volumes of material within one inch of the clad/base metal interface when scanning vessel shell beltline region welds. Procedures provide for implementation of near surface examination methods capable of identifying the clad side, 2 percent 90 degree corner reflector in the basic calibration bloc specified in Article 4, Section V of the ASME Boiler and Pressure Vessel Code. Either 45 degree full node or shallow angle techniques may be used to comply with this recommendation.

Paragraph 3.2 recommends that beam angles selected to scan welds be based on the geometry of the weld/parent metal interface. In particular, welds identified in paragraph T-441.4.3, Article 4, Section V of the ASME Boiler and Pressure Vessel Code should be examined such that at least one beam angle is perpendicular, plus or minus 15 degrees, to the weld/parent metal interface. If this is not feasible, demonstration that unfavorably oriented flaws can be detected or use of alternative NDE techniques is recommended.

The recommendations of paragraph 3.2 are met. Beam angles are selected for examinations of nozzle-to-shell welds from the nozzle bores and the vessel flange-to-shell weld from the flange seal surface based on their ability to provide near normal incidence to the weld/base metal interface. Ability to adhere to the plus or minus 15 degree tolerance suggested is dependent upon component geometry.

4.0 BEAM PROFILE

These recommendations are discussed in 1.2f.

5.0 SCANNING WELD/METAL INTERFACE

The recommendations are discussed in 3.2.

6.0 RECORDING AND SIZING

This paragraph recommends the capability to detect, record, and size flaws defined by paragraph IWB-3500, Section XI of the ASME Boiler and Pressure Vessel Code be demonstrated. The measurement tolerance established should be applied when sizing flaws detected and recorded during scanning.

The ability to detect, record and size flaws is demonstrated to the extent that calibrations are required by Article 4, Section V of the ASME Boiler and Pressure Vessel Code. Experience suggests procedures, equipment, and personnel utilized for these examinations are capable of detecting and recording reflectors which exceed the recording criteria defined in Article 4, Section V of the ASME Boiler and Pressure Vessel Code as augmented by USNRC Regulatory Guide 1.150. Experience is being developed with advanced sizing methods and automated data acquisition and recording equipment. Application of these emerging technologies will be considered in the event significant reflectors are detected.

Paragraph 6.1 recommends indications from geometric sources need not be sized. Recording should be at 50 percent DAC. Once sufficient information has been gathered to identify the origin of the geometric indication, further evaluation and recording are not required.

The recommendations of paragraph 6.1 are met. All indications which exceed the recording level are automatically identified on the remote inspection tool data printout in terms of amplitude, sweep position, and location in the vessel. All indications are investigated to determine their origin and the interpretation, along with the basis for that interpretation are documented in the vessel examination records.

6.2 INDICATIONS WITH CHANGING METAL PATH

This paragraph provides recommendations for recording of indications which change metal path for a distance greater than that recorded from the calibration reflector. Reflectors at metal paths representing 25 percent and greater of the through-wall thickness of the vessel wall as measured from the inner surface should be recorded per Sections V and XI of the ASME Boiler and Pressure Vessel Code and characterized at 50 percent DAC. Reflectors within the inner 25 percent of the vessel through-wall thickness should be recorded at 20 percent DAC. Characterization should be in accordance with methods demonstrated in paragraph 6.0. Indications sized to 20 percent DAC may have their size corrected by subtracting the beam width in the through thickness direction as based on data collected from a calibration hole at a depth similar to that of the reflector. This size should be compared to the reflector size determined based on 50 percent DAC without beam spread correction. The size used for evaluation should be the larger size as determined by the two methods.

The recommendations of paragraph 6.2 are met. Valid angle beam indications at metal paths representing 25 percent and greater of the vessel through-wall thickness measured from the inner surface are recorded and characterized at 50 percent DAC regardless of indication travel. Valid angle beam indications within the inner 25 percent of the vessel wall thickness measured from the vessel inner surface are recorded at 20 percent DAC regardless of indication travel. If indications within the inner 25 percent of the vessel inner surface exceed 50 percent DAC, they are recorded at 20 percent and 50 percent DAC limits. The size is determined by the larger of the 20 percent DAC size minus beam width or 50 percent DAC without beam spread correction.

6.3 INDICATIONS WITHOUT CHANGING METAL PATH

This paragraph recommends that indications which do not change metal path and are within the outer 75 percent of the through-wall dimension be recorded only when any continuous dimension exceeds one inch. If such an indication falls within the inner 25 percent of the through-wall dimension it should be recorded at 20 percent DAC and evaluated at 50 percent DAC. A precautionary note is included which provides some guidance in determining whether a reflector is truly of the non-traveling variety.

The recommendations of paragraph 6.3 are met. Procedures employed do not discriminate between traveling and non-traveling indications during the recording process. Thus, valid angle beam indications at metal paths representing 25 percent and greater of the vessel wall thickness are recorded at 50 percent DAC, regardless of the extent to which they might be observed to travel. Valid angle beam indications within the inner 25 percent of the vessel wall thickness as measured from the inner surface are recorded at 20 percent DAC, regardless of the extent to which they might be observed to travel. When indications in the inner 25 percent of the vessel wall thickness exceed 50 percent DAC, they are recorded at 20 percent and 50 percent DAC limits. The size is determined by the larger of the 20 percent DAC size minus beam width or 50 percent DAC without beam spread correction.

6.4 ADDITIONAL RECORDING CRITERIA

This paragraph recommends supplementary recording criteria for reflectors which are reportable according to the Regulatory Guide. Reportable indications should be recorded at scan intervals no greater than one-fourth inch. The recorded information should include metal path and transducer location data for 20 percent DAC, 50 percent DAC, 100 percent DAC, and the peak amplitude locations, where applicable. Electronic gating systems shall provide on-line, reproducible, recorded information regarding metal path, amplitude, and positin of all indications exceeding a preset level, representing the minimum recording level required. Preferred methods are to employ multiple gates or a single gate for each cahnnel with multi-indication recording capability.

The recommendations of this paragraph are met. Reportable indications are recorded at scan intervals of one-fourth inch, maximum. Recording procedures require collection and documentation of indication transit time and transducer location for 20 percent DAC, 50 percent DAC, 100 percent DAC, and peak amplitude locations, where applicable. Information presented automatically on the data printout include indication amplitude, sweep position, and location in the vessel. The gating system employed is capable of recording up to four indications which might appear in the gate simultaneously.

7.0 REPORTING OF RESULTS

This paragraph recommends that records obtained while following the recommendations of Regulatory Positions 1.0, 2.0, 3.0, and 6.0 along with any discussion and explanation be kept available at the site. Indications determined by Regulatory Positions 6.2 or 6.3 to exceed the allowable limits of Section XI of the ASME Boiler and Pressure Vessel Code should be reported as abnormal degradation of the reactor pressure boundary in accordance with the recommendations of Regulatory Position 2a(3) of Regulatory Guide 1.16.

The report of the ultrasonic examination should also include the best estimate of the tolerances in sizing flaws at the sensitivity specified in 6.0 and the basis for this estimate, a description of the technique used to qualify the effectiveness of the examination procedure, the best estimate of volumes not efficiently examined, and sketches of equipment and identification of reference points and necessary dimensions to allow a reviewer to follow the equipment's indication location scheme. Finally, if other volumetric techniques are used, they should be described in the final report.

The recommendations of paragraph 7.0 are met as described below. The reactor vessel final report includes all records obtained per implementation of Regulatory Positions 1.0, 2.0, 3.0, and 6.0. Indications determined to exceed the allowable limits of Section XI of the ASME Boiler and Pressure Vessel Code are reported as required. The report of the ultrasonic examinations includes all calibration records and procedures; estimates of volumes inaccesible due to geometry, access, etc.; descriptions and sketches of the remote examination system which explain its operation, critical reference points, and dimensions; and descriptions of alternative volumetric techniques, if applied. Estimates of error bands associated with flaw sizing are not provided as they are considered subjective in nature and not readily substantiated with quantitative data. As more experience is developed with use of advanced sizing methods and automated data acquisition equipment, estimates of this nature may be possible in the future.

8.0 MANUAL ULTRASONIC EXAMINATIONS OF REACTOR VESSEL CLOSURE HEAD WELDS

Manual ultrasonic examinations of Reactor Vessel Closure Head Flange and Meriodional Welds will be performed to ASME Boiler and Pressure Vessel Code Section V and XI-1983 Edition thru Summer 1983 Addenda for calibration, examination and recording criteria. In addition, valid flaw indications which provide a response equal to or greater than 20% of primary reference DAC and are at sweep locations representing the inner 25% through wall thickness measured from the inner surface will be recorded per the requirements of USNRC Regulatory Guide 1.150 Rev. 1.

SECTION XI EDITION: 1983 THRU SUMMER 1983 ADDENDA

COMPONENT: Reactor Vessel RCPCR-V1 Closure Head and Reactor Vessel Bottom Head
CODE CLASS: 1
CODE TABLE: IWB-2500-1
CODE CATEGORY: B-A
CODE ITEM NO.: B1.21

EXAMINATION REQUIREMENT: Volumetric examination of 100% of Code Required Accessible Length of one Weld per IWB-2500-3.

BASIS FOR RELIEF: The Reactor Vessel Closure Head peel segment to disc circumferential weld is completely enclosed within the pattern of CRDM penetrations inside the shroud and are not accessible for Volumetric examination. Volumetric examination of the Reactor Vessel bottom head peel segment to disc circumferential weld is restricted from inside by the location of adjacent in-core instrumentation penetrations. Volumetric examination from the outside of the Reactor Vessel is restricted by incore instrumentation conduits which prevent sufficient scanning path for Volumetric examination.

ALTERNATIVE EXAMINATION: As required by Section XI-Category B-A, Item No. B1.21-100% of "accessible length of one weld" is to be examined during the Second Interval. Therefore, the 3rd weld in this category (Reactor Vessel Lower Head Circumferential Weld) will be examined volumetrically 100% of accessible length.

SECTION XI EDITION: 1983 THRU SUMMER 1983 ADDENDA

COMPONENT: Reactor Vessel RCPCR-V1: Closure Head Meridional Welds (6) and Bottom Head Meridional Welds (6)
CODE CLASS: 1
CODE TABLE: IWB-2500-1
CODE CATEGORY: B-A
CODE ITEM NO.: B1.22

EXAMINATION REQUIREMENT: Volumetric Examination of 100% of Code Required Accessible Length of One Weld per IWB-2500-3.

BASIS FOR RELIEF: The Reactor Vessel Closure Head Meridional Welds are restricted by the shroud enclosing the CRDM penetrations for Volumetric examination. The Reactor Vessel Bottom Head Meridional Welds are restricted from inside the Reactor Vessel by the location of adjacent in-core instrumentation penetrations. Volumetric examination from the outside of the Reactor Vessel is restricted by in-core instrumentation conduits which prevent sufficient scanning path for Volumetric examination.

ALTERNATIVE EXAMINATION: As required by Section XI-Category B-1, Item No. 1.22-100% of "Accessible Length of Weld" will be examined during the Second Interval.

SECTION XI EDITION: 1983 THRU SUMMER 1983 ADDENDA

COMPONENT: Reactor Vessel RCPCR-V1 Shell to Flange Weld
CODE CLASS: 1
CODE TABLE: IWB-2500-1
CODE CATEGORY: B-A
CODE ITEM NO.: B1.30

EXAMINATION REQUIREMENT: Volumetric Examination of 100% of Code Required Area per IWB-2500-8.

BASIS FOR RELIEF: Volumetric examinations of the Reactor Vessel Shell to Flange Weld from the Seal Surface is restricted due to 2 Guide Studs at Reactor Vessel Core locations #12 and #44.

ALTERNATIVE EXAMINATION: Volumetric examination of the Reactor Vessel Shell to Flange Weld is performed utilizing the automated Reactor Vessel Tool. 1. From the Seal Surface (when the Core Barrel is in place) and 2. From the Reactor Vessel I.D. and Seal Surface (when the Core Barrel is removed). Volumetric examination will be performed on approximately 86% of the Reactor Vessel Shell to Flange Weld from the Seal Surface and 100% of the Reactor Vessel Shell to Flange Weld from the I.D.

SECTION XI EDITION: 1983 THRU SUMMER 1983 ADDENDA

COMPONENT: Class 1 Components and Piping Welds; Class 1 Integrally Welded Attachments
CODE CLASS: 1
CODE TABLE: IWB-2500-1
CODE CATEGORY: B-A; B-B; B-B; B-B; B-D; B-F; B-F; B-G-1; B-H; B-J; B-J; B-J; B-J; B-J; B-J; B-K-1; B-K-1
CODE ITEM NO.: B1.40; B2.11; B2.12; B2.40; B3.140; B5.40; B5.70; B6.180; B8.20; B9.11; B9.12; B9.21; B9.31; B9.32; B9.40; B10.10; B10.20

EXAMINATION REQUIREMENT: Volumetric and/or surface examination of 100% of Code Required Area per IWB-2500-1, IWB-2500-2, IWB-2500-5, IWB-2500-6, IWB-2500-8, IWB-2500-9, IWB-2500-10, IWB-2500-11, IWB-2500-12, IWB-2500-13, IWB-2500-14, and IWB-2500-15.

BASIS FOR RELIEF: Limitations may occur for the examination of Class 1 Component and Piping Welds when the welds are at geometric discontinuities such as pipe to vessel welds, pipe to valve or flange welds, elbow introdus or extrodus or vessel to flange welds. Limitations may also occur from welded pads, welded support lugs, welded name plates or component and Integrally Welded Attachment configurations. Limitations may occur for the examination of Reactor Coolant Pump Studs, when in place, due to electrical conduits and component piping.

ALTERNATIVE EXAMINATION: Volumetric and/or Surface examinations as required by ASME Boiler and Pressure Vessel Code Section XI-1983 Edition thru Summer 1983 Addenda will be performed to the maximum extent possible. Where limitations restrict examination of 100% code required area the limitation will be documented on the data sheet for the stud or weld examined and a Limitation to Examination Form describing approximate size, location and type of limitation. For Reactor Coolant Pump Studs, examinations will be performed on restricted studs when the Reactor Coolant Pumps are disassembled for maintenance.

SECTION XI EDITION: 1983 THRU SUMMER 1983 ADDENDA

COMPONENT: Reactor Vessel RCPCR-V1 Nozzle to Safe End Butt Welds (8)
CODE CLASS: 1
CODE TABLE: IWB-2500-1
CODE CATEGORY: B-F
CODE ITEM NO.: B5.10

EXAMINATION REQUIREMENT: Volumetric and Surface examination of 100% of Code Required Area per IWB-2500-8.

BASIS FOR RELIEF: The only access to the Reactor Vessel Nozzle to Safe End Butt Welds from the outside surfaces is through removable plugs in the primary shield. These plugs are located above the nozzle safe ends and are removable through the refueling cavity floor. With the plugs removed, the top insulated surfaces (approximately 25%) of the nozzle safe ends are visible, however the fixed insulation, designed as nonremovable, the limited space between the nozzle and cavity wall and expected high radiation levels precludes surface examinations.

ALTERNATIVE EXAMINATION: The Reactor Vessel Nozzle to Safe End Butt Welds will be volumetrically examined only during the 2nd Inspection Interval from the inside diameter with the automated Reactor Vessel Tool.

SECTION XI EDITION: 1983 THRU SUMMER 1983 ADDENDA

COMPONENT: Reactor Vessel RCPCR-V1 Threads in Flange (54)
CODE CLASS: 1
CODE TABLE: IWB-2500-1
CODE CATEGORY: B-G-1
CODE ITEM NO.: B6.40

EXAMINATION REQUIREMENT: Volumetric examination of 100% of Code Required Area per IWB-2500-12.

BASIS FOR RELIEF: The Reactor Vessel Threads in Flange are examined Volumetrically utilizing the automated Reactor Vessel Tool. Guide Studs located at Stud Holes #12 and #44 restrict examinations for a total of 6 Stud Holes (11, 12, 13, 43, 44 and 45).

ALTERNATIVE EXAMINATION: Visual examination of the 6 restricted threads in flange will be performed in conjunction and as accessible during Vessel Interior examinations performed under Section XI-Code, Item No. B.13.10.

SECTION XI EDITION: 1983 THRU SUMMER 1983 ADDENDA

COMPONENT: Pressurizer RCPCPR1 Circumferential (1) and Longitudinal (1) Welds
CODE CLASS: 1
CODE TABLE: IWB-2500-1
CODE CATEGORY: B-B
CODE ITEM NO.: B2.11 and B2.12

EXAMINATION REQUIREMENT: Volumetric examination of 100% of Code required area per IWB-2500-1 and IWB-2500-2.

BASIS FOR RELIEF: The Pressurizer Upper Head Circumferential and Longitudinal Welds are enclosed in a biological and missile shield and are inaccessible for examination.

ALTERNATIVE EXAMINATION: Visual examination for evidence of leakage will be performed during System Leakage and System Hydrostatic Tests per Section XI Code Items B15.20 and B15.21.

SECTION XI EDITION: 1983 THRU SUMMER 1983 ADDENDA

COMPONENT: Pressurizer RCPCPR1 Nozzle Inside Radius Sections (6)
CODE CLASS: 1
CODE TABLE: IWB-2500-1
CODE CATEGORY: B-D
CODE ITEM NO.: B3.120

EXAMINATION REQUIREMENT: Volumetric examination of 100% by Code required area per IWB-2500-7.

BASIS FOR RELIEF: The nozzles on the Pressurizer upper and lower head are cast with the vessel heads. The as cast surface of the heads, combined with the geometry of this area effectively preclude ultrasonic examination of the nozzle inner radii. The geometry and size of the nozzles are such that a radiographic examination is not feasible. Specifically, the radiographic test film cannot be situated properly from the I.D. due to lack of interior structure to work from. Placement of the source will not allow proper film to source distance, resulting in geometric unsharpness. Surface and visual examinations would be restricted by anticipated radiation levels and the as clad surface.

ALTERNATIVE EXAMINATION: Visual examination for evidence of leakage will be performed during System Leakage and System Hydrostatic Tests per Section XI, Code Items B15.20 and B15.21.

SECTION XI EDITION: 1983 THRU SUMMER 1983 ADDENDA

COMPONENT: Reactor Coolant Pipe Circumferential Welds (8)
CODE CLASS: 1
CODE TABLE: IWB-2500-1
CODE CATEGORY: B-J
CODE ITEM NO.: B9.11

EXAMINATION REQUIREMENT: Volumetric and Surface examination of 100% of Code Required area per IWB-2500-8.

BASIS FOR RELIEF: The only access to the first Reactor Coolant Pipe Circumferential Weld off the Hotleg and Coldleg at the Reactor Vessel from the outside surfaces is through removable plugs in the primary shield. These plugs are located above the Reactor Coolant Pipe Circumferential Weld and are removable through the refueling cavity floor. With the plugs removed, the top insulated surfaces (approximately 25%) of the Circumferential Welds are visible, however the fixed insulation, designed as nonremovable, the limited space between the Reactor Coolant Pipe and cavity wall and expected high radiation levels preclude surface examinations.

ALTERNATIVE EXAMINATION: The first Reactor Coolant Pipe Circumferential Weld off the Hotleg and Coldleg at the Reactor Vessel will be volumetrically examined in conjunction with the Reactor Vessel Nozzle to Safe End Butt Welds Section XI, Item No. B5.10 during the 2nd Inspection Interval from the Inside Diameter with the automated Reactor Vessel Tool.

SECTION XI EDITION: 1983 THRU SUMMER 1983 ADDENDA

COMPONENT: Reactor Coolant Pipe Longitudinal Welds (16)
CODE CLASS: 1
CODE TABLE: IWB-2500-1
CODE CATEGORY: B-J
CODE ITEM NO.: B9.12

EXAMINATION REQUIREMENT: Volumetric and Surface examination of 100% of Code required area per IWB-2500-8.

BASIS FOR RELIEF: The eight (8) ninety degree elbows on the crossover legs of the Reactor Coolant System are fabricated in two halves from austenitic stainless steel castings welded together by the electroslag process. The structure and nature of the electroslag weld in the case of the austenitic ninety degree elbows is such that the material is opaque to ultrasonic transmissions utilizing currently available techniques. Radiography would be restricted due to trying to obtain double wall shots on these components which are approximately 38" diameter, 3.5 inch wall thickness, containing a 2" thick splitter plate and having radiation levels up to 300 mr/hr on contact.

ALTERNATIVE EXAMINATION: Surface examination will be performed as required by Section XI - Code Item B9.12.

SECTION XI EDITION: 1983 THRU SUMMER 1983 ADDENDA

COMPONENT: Reactor Coolant Pumps RCPCP1-31, RCPCP2-32, RCPCP3-33 and RCPCP4-34 Pump Casing Welds (12) and Pump Casing (4)

CODE CLASS: 1

CODE TABLE: IWB-2500-1

CODE CATEGORY: B-L-1 and B-L-2

CODE ITEM NO.: B12.10 and B12.20

EXAMINATION REQUIREMENT: Volumetric and Visual VT-3 of 100% of Code required area per IWB-2500-16 and Internal Surfaces.

BASIS FOR RELIEF: The Code requirement to disassemble a Reactor Coolant Pump strictly for visual and volumetric examination has a very small potential for the identification of service induced flaws. This fact is demonstrated when reviewing the results from a number of Reactor Coolant Pump Casings examined in the industry at this time. No potentially degrading flaws or indications have been found during these examinations. The inappropriate balance of possible flaw detection and enormous impact on expenditures of Plant manpower does not justify a Reactor Coolant Pump disassembly solely for examination purposes. Also, when reviewing the substantial expenditures of man-rem and the small potential for finding flaws, justification for these inspections is not warranted and is very undesirable due to ALARA concerns. The design and construction of the pump casings greatly reduce any potential for failure in the areas which require inspection by the code; also, the Reactor Coolant Pumps are continually monitored for vibration, bearing temperature, seal flow and seal flow temperature. The Reactor Coolant Pumps are also visually inspected for leaks prior to startup after each refueling.

ALTERNATIVE EXAMINATION: Volumetric and Visual examinations will be performed when a Reactor Coolant Pump is required to be disassembled for maintenance purposes. However, a surface examination will be performed on the 3 Reactor Coolant Pump Welds from the OD and a visual examination on the Casing from the OD will be performed at the end of the 2nd Inspection Interval.

SECTION XI EDITION: 1983 THRU SUMMER 1983 ADDENDA

COMPONENT: Reactor Coolant Pumps RCPCP1-31, RCPCP2-32, RCPCP3-33 and RCPCP4-34 Flywheels
CODE CLASS: 1
CODE TABLE: Not Applicable
CODE CATEGORY: Not Applicable
CODE ITEM NO.: Not Applicable

EXAMINATION REQUIREMENT: United States Nuclear Regulatory Guide 1.14 requires Volumetric examination of each Reactor Coolant Pump Flywheel every 3 years and Surface examination once every 10 years.

BASIS FOR RELIEF: Volumetric examinations as required by Regulatory Guide 1.14 would require each Flywheel to be examined 3 times during the 2nd Ten Year Interval which exceeds normal Section XI examination extent and frequency for other components. Surface examinations are impractical due to the painted condition of the Flywheel.

ALTERNATIVE EXAMINATION: An in place ultrasonic volumetric examination of the areas of higher stress concentration at the bore and keyway will be performed on each Reactor Coolant Pump Flywheel once during the 2nd Ten year Interval. Scheduling will be equally divided throughout the 10 year period. As required by Section XI if a rejectable indication is noted the remaining Reactor Coolant Pump Flywheels will then be examined during the scheduled outage. Surface examination will be performed on each Flywheel unpainted bore and keyway surfaces when disassembled for maintenance.

SECTION XI EDITION: 1983 THRU SUMMER 1983 ADDENDA

COMPONENT: Valve Body (4)
CODE CLASS: 1
CODE TABLE: IWB-2500-1
CODE CATEGORY: B-M-2
CODE ITEM NO.: B12.50

EXAMINATION REQUIREMENT: Visual VT-3 of 100% of Code required area (Internal Surfaces).

BASIS FOR RELIEF: Code specified internal visual examinations is to verify continued integrity of the valve pressure boundary. All valves are visually examined for leakage after each refueling outage and during the hydrostatic tests of the Reactor Coolant System while subjected to full Reactor Coolant System pressure. The integrity of these valves have therefore been demonstrated by continued leakage for hydrostatic tests. Additionally, these valves are part of the IWV-3000 Inservice Testing Program. Disassembly therefore for Section XI requirements should not be required.

ALTERNATIVE EXAMINATION: Visual VT-3 examinations of the 4 required valves interior surfaces will be performed during the 2nd Ten Year Interval if disassembled for normal maintenance.

SECTION XI EDITION: 1983 THRU SUMMER 1983 ADDENDA

COMPONENT: Class 2 Component and Piping Welds; Class 2 Integrally Welded Attachments
CODE CLASS: 2
CODE TABLE: IWC-2500-1
CODE CATEGORY: C-A; C-A; C-A; C-B; C-B; C-B; C-C; C-C; C-F; C-F; C-F; C-F; C-F
CODE ITEM NO.: C1.10; C1.20; C1.30; C2.21; C2.22; C2.31; C3.10; C3.20; C5.11; C5.12; C5.21; C5.22; C5.31

EXAMINATION REQUIREMENT: Volumetric and or Surface examination of 100% of Code required area per IWC-2500-1, IWC-2500-2, IWC-2500-4(a) or (b), IWC-2500-4(c), IWC-2500-5, IWC-2500-7, IWC-2500-9, IWC-2500-10, IWC-2500-11, IWC-2500-12 and IWC-2500-13.

BASIS FOR RELIEF: Limitations may occur for the examinations of Class 2 component and piping welds when the welds occur at geometric discontinuities such as pipe to vessel welds, pipe to valve or flange welds, elbow introdus or extrodus or vessel to flange welds. Limitations may also occur from welded pads, welded support lugs, welded name plates or component and Integrally Welded Attachment configuration.

ALTERNATIVE EXAMINATION: Volumetric and or Surface examinations as required by ASME Boiler and Pressure Vessel Code Section XI-1983 Edition thru Summer 1983 Addenda will be performed to the maximum extent possible. Where limitations restrict examinations of 100% of Code required area the limitation will be documented on the data sheet for the weld examined and a limitation to Examination Form describing approximate size, location and type of limitation.

SECTION XI EDITION: 1983 THRU SUMMER 1983 ADDENDA

COMPONENT: Steam Generator RCPCSG1-31, RCPCSG2-32, RCPCSG3-33 and RCPCSG4-34 Mainsteam Nozzle Inside Radius Sections (4)

CODE CLASS: 2

CODE TABLE: IWC-2500-1

CODE CATEGORY: C-B

CODE ITEM NO.: C2.22

EXAMINATION REQUIREMENT: Volumetric examination of 100% of Code required area per IWC-2500-4(a) or (b).

BASIS FOR RELIEF: The inside radius section of the 4 Mainsteam Nozzles per Section XI are considered susceptible to flaw initiation and growth due to high thermal and mechanical stresses associated with the vessel and connected piping systems. In the case of Indian Point No. 3 steam generator nozzles, the nozzle is a one-piece forging containing a set of seven holes bored parallel to the nozzle centerline. Inconnel flow restrictors are subsequently installed within each of these holes and attached to cladding that is weld deposited onto the bottom surface of the nozzle. The cladding serves as a medium of attachment for the inconnel flow restrictors and as an erosion barrier to protect the nozzle forging. Since the ligaments between the holes distribute the stresses throughout the nozzle forging, there is no high stress, inside radius section for the mainsteam nozzle design.

ALTERNATIVE EXAMINATION: Visual examination, however, will be performed during System Leakage and System Hydrostatic tests as required by Section XI-Code Item No. 7.10 and 7.20.

SECTION XI EDITION: 1983 THRU SUMMER 1983 ADDENDA

COMPONENT: Seal Water Heat Exchanger CSAHSW1-31 Shell and Head Circumferential Welds
CODE CLASS: 2
CODE TABLE: IWC-2500-1
CODE CATEGORY: C-A
CODE ITEM NO.: C1.10 and C1.20

EXAMINATION REQUIREMENT: Volumetric examination of 100% of Code required area per IWC-2500-1.

BASIS FOR RELIEF: The thickness of the material (0.187 in.) used to construct the thin walled Pressure Vessel is such that the combined dead zone and near field effect of the ultrasonic transducer would render ultrasonic examination meaningless.

ALTERNATIVE EXAMINATION: Surface examination will be performed at the extent and frequency required in Table IWC-2500-1. Surface examination is permitted per ASME Code Case N-435-1 "Alternate Examination Requirements for Vessels With Wall Thickness 2 Inch or Less" which states that for welds in vessels with nominal wall thickness of .20" or less, surface examination may be applied in lieu of volumetric examination. ASME Code Case N-435-1 is listed as an acceptable code case in NRC Regulatory Guide 1.147, "Inservice Inspection Code Case Acceptability, ASME Boiler and Pressure Vessel Code Section XI, Division 1, Revision 6.

SECTION XI EDITION: 1983 THRU SUMMER 1983 ADDENDA

COMPONENT: Seal Water Return Filter CSFLSW1-31 Shell and Head Circumferential Welds
CODE CLASS: 2
CODE TABLE: IWC-2500-1
CODE CATEGORY: C-A
CODE ITEM NO.: C1.10 and C1.20

EXAMINATION REQUIREMENT: Volumetric examination of 100% of Code required area per IWC-2500-1.

BASIS FOR RELIEF: The thickness of the material (0.188 in.) used to construct the thin walled Pressure Vessel is such that the combined dead zone and near field effect of the ultrasonic transducer would render ultrasonic examination meaningless.

ALTERNATIVE EXAMINATION: Surface examination will be performed at the extent and frequency required in Table IWC-2500-1. Surface examination is permitted per ASME Code Case N-435-1 "Alternate Examination Requirements for Vessels With Wall Thickness 2 Inch or Less" which states that for welds in vessels with nominal wall thickness of .20" or less, surface examination may be applied in lieu of volumetric examination. ASME Code Case N-435-1 is listed as an acceptable code case in NRC Regulatory Guide 1.147, "Inservice Inspection Code Case Acceptability, ASME Boiler and Pressure Vessel Code Section XI, Division 1, Revision 6.

SECTION XI EDITION: 1983 THRU SUMMER 1983 ADDENDA

COMPONENT: Class 1, 2 and 3 Components
CODE CLASS: 1, 2 & 3
CODE TABLE: IWB-2500-1, IWC-2500-1 and IWD-2500-1
CODE CATEGORY: B-P, C-H, D-A, D-B and D-C
CODE ITEM NO.: B15.10; B15.11; B15.20; B15.21; B15.30; B15.31; B15.40; B15.41; B15.50; B15.51; B15.60; B15.61; B15.70; B15.71; C7.10; C7.20; C7.30; C7.40; C7.50; C7.60; C7.70; C7.80; D1.10; D2.10 and D3.10

EXAMINATION REQUIREMENT: Volumetric VT-2; during System Pressure and System Hydrostatic Tests.

BASIS FOR RELIEF: Certain components are made inaccessible by high radiation areas, congested piping and closed piping tunnels. It is proposed that they be inspected in accordance with the buried component provisions of Paragraph IWA-5244 of the ASME Boiler and Pressure Vessel Code, Section XI 1983 Edition through Summer 1983 Addenda (83/S83). Other portions and components of various Class 1, 2 and 3 systems cannot meet test pressure requirements of Section XI 83/S83 due to plant specific system configurations.

ALTERNATIVE EXAMINATION: The individual systems where relief is required and the alternative tests to be performed will be identified in the Indian Point Unit No. 3 System Pressure and Hydrostatic Tests Relief Requests.

SECTION XI EDITION: 1983 THRU SUMMER 1983 ADDENDA

COMPONENT: Class 3 Component Standard Supports
CODE CLASS: 3
CODE TABLE: IWF-2500-1
CODE CATEGORY: F-C, F-C, F-C, F-C, F-C
CODE ITEM NO.: F3.10; F3.20; F3.30; F3.40; F3.50

EXAMINATION REQUIREMENT: Visual examination of 100% of Code required area per IWF-2500-1.

BASIS FOR RELIEF: Areas of the Class 3 Service Water Piping and Component Water Piping are made inaccessible by sealed buried Tunnels and concrete shields.

ALTERNATIVE EXAMINATION: Component Standard Supports behind concrete shields will be examined in accordance with the buried component provisions of Paragraph IWA-5244 of the ASME Boiler and Pressure Vessel Code Section XI-1983 Edition thru Summer 1983 Addenda for System Pressure Tests. Component Standard Supports in sealed buried Tunnels will not be examined due to inaccessibility to visually examine Component Standard Supports.

NUCLEAR ENERGY SYSTEMS
FORM D037 08/25/87 Westinghouse Proprietary

NSID COMPONENT SURVEILLANCE SCHEDULE

Effective Date 10/25/89 Process Date 03/09/90

COMPONENT: R.V. CIRCUMFERENTIAL SHELL WELDS

83S	83S		INT		EXAMINATION METHODS			FIRST INTERVAL			SECOND INTERVAL			THIRD INTERVAL			FOURTH INTERVAL			
ITEM NUMBER	CATEGORY NUMBER	DESCRIPTION	SKETCH NUMBER	IDENT. NUMBER	VOL.	SUR.	VIS.	1ST PER	2ND PER	3RD PER	1ST PER	2ND PER	3RD PER	1ST PER	2ND PER	3RD PER	1ST PER	2ND PER	3RD PER	REMARKS
B1.11	B-A		1-1100	2	X															
B1.11	B-A		1-1100	3	X								/							REFERENCE TABLE 4.0
		TOTAL ID's for B1.11		2 *									1							

NSID COMPONENT SURVEILLANCE SCHEDULE

Effective Date 10/25/89 Process Date 03/09/90

COMPONENT: R.V. LONGITUDINAL SHELL WELDS

83S	83S		INT		EXAMINATION METHODS			FIRST INTERVAL			SECOND INTERVAL			THIRD INTERVAL			FOURTH INTERVAL			
ITEM NUMBER	CATEGORY NUMBER	DESCRIPTION	SKETCH NUMBER	IDENT. NUMBER	VOL.	SUR.	VIS.	1ST PER	2ND PER	3RD PER	1ST PER	2ND PER	3RD PER	1ST PER	2ND PER	3RD PER	1ST PER	2ND PER	3RD PER	REMARKS
B1.12	B-A		1-1100	5	X															
B1.12	B-A		1-1100	6	X															
B1.12	B-A		1-1100	7	X															
B1.12	B-A		1-1100	8	X															
B1.12	B-A		1-1100	9	X								/							REFERENCE TABLE 4.0
B1.12	B-A		1-1100	10	X															
B1.12	B-A		1-1100	11	X															
B1.12	B-A		1-1100	12	X															
B1.12	B-A		1-1100	13	X															
		TOTAL ID's for B1.12		9 *									1							

NUCLEAR ENERGY SYSTEMS
FORM D037 08/25/87 Westinghouse Proprietary

NSID COMPONENT SURVEILLANCE SCHEDULE

Effective Date 10/25/89 Process Date 03/09/90

COMPONENT: REACTOR COOLANT PUMP FLYWHEEL

83S	83S		INT		EXAMINATION METHODS			FIRST INTERVAL			SECOND INTERVAL			THIRD INTERVAL			FOURTH INTERVAL			
ITEM NUMBER	CATEGORY NUMBER	DESCRIPTION	SKETCH NUMBER	IDENT. NUMBER	VOL.	SUR.	VIS.	1ST PER	2ND PER	3RD PER	1ST PER	2ND PER	3RD PER	1ST PER	2ND PER	3RD PER	1ST PER	2ND PER	3RD PER	REMARKS
BRG1.14	R-G		1-5100	31 FLYWHL.	X						X									REFERENCE TABLE 4.0
BRG1.14	R-G		1-5100	32 FLYWHL.	X							/								
BRG1.14	R-G		1-5100	33 FLYWHL.	X								/							
BRG1.14	R-G		1-5100	34 FLYWHL.	X								/							
		TOTAL ID's for BRG1.14		4 *							1	1	2							

NSID COMPONENT SURVEILLANCE SCHEDULE

Effective Date 10/25/89 Process Date 03/09/90

COMPONENT: R.V. CIRCUMFERENTIAL HEAD WELDS

83S	83S		INT		EXAMINATION METHODS			FIRST INTERVAL			SECOND INTERVAL			THIRD INTERVAL			FOURTH INTERVAL			
ITEM NUMBER	CATEGORY NUMBER	DESCRIPTION	SKETCH NUMBER	IDENT. NUMBER	VOL.	SUR.	VIS.	1ST PER	2ND PER	3RD PER	1ST PER	2ND PER	3RD PER	1ST PER	2ND PER	3RD PER	1ST PER	2ND PER	3RD PER	REMARKS
B1.21	B-A		1-1100	4	X								/							REFERENCE TABLE 4.0
B1.21	B-A		1-1100	14	X															
B1.21	B-A		1-1300	8	X															
		TOTAL ID's for B1.21		3 *									1							

NUCLEAR ENERGY SYSTEMS
FORM D037 08/25/87 Westinghouse Proprietary

NSID COMPONENT SURVEILLANCE SCHEDULE

Effective Date 10/25/89 Process Date 03/09/90

COMPONENT: R.V. MERIDIONAL HEAD WELDS

83S	83S		INT		EXAMINATION METHODS			FIRST INTERVAL			SECOND INTERVAL			THIRD INTERVAL			FOURTH INTERVAL			
ITEM NUMBER	CATEGORY NUMBER	DESCRIPTION	SKETCH NUMBER	IDENT. NUMBER	VOL.	SUR.	VIS.	1ST PER	2ND PER	3RD PER	1ST PER	2ND PER	3RD PER	1ST PER	2ND PER	3RD PER	1ST PER	2ND PER	3RD PER	REMARKS
B1.22	B-A		1-1100	15	X															
B1.22	B-A		1-1100	16	X								/							REFERENCE TABLE 4.0
B1.22	B-A		1-1100	17	X															
B1.22	B-A		1-1100	18	X															
B1.22	B-A		1-1100	19	X															
B1.22	B-A		1-1100	20	X															
B1.22	B-A		1-1300	2	X															
B1.22	B-A		1-1300	3	X															
B1.22	B-A		1-1300	4	X															
B1.22	B-A		1-1300	5	X															
B1.22	B-A		1-1300	6	X															
B1.22	B-A		1-1300	7	X															
		TOTAL ID's for B1.22		12 *									1							

NSID COMPONENT SURVEILLANCE SCHEDULE

Effective Date 10/25/89 Process Date 03/09/90

COMPONENT: R.V. SHELL TO FLANGE WELD

83S	83S		INT		EXAMINATION METHODS			FIRST INTERVAL			SECOND INTERVAL			THIRD INTERVAL			FOURTH INTERVAL			
ITEM NUMBER	CATEGORY NUMBER	DESCRIPTION	SKETCH NUMBER	IDENT. NUMBER	VOL.	SUR.	VIS.	1ST PER	2ND PER	3RD PER	1ST PER	2ND PER	3RD PER	1ST PER	2ND PER	3RD PER	1ST PER	2ND PER	3RD PER	REMARKS
B1.30	B-A		1-1100	1	X						X		/							REFERENCE TABLE 4.0
		TOTAL ID's for B1.30		1 *							1		1							

NSID COMPONENT SURVEILLANCE SCHEDULE

Effective Date 10/25/89 Process Date 03/09/90

COMPONENT: R.V. HEAD TO FLANGE WELD

83S	83S		INT		EXAMINATION METHODS			FIRST INTERVAL			SECOND INTERVAL			THIRD INTERVAL			FOURTH INTERVAL			
ITEM NUMBER	CATEGORY NUMBER	DESCRIPTION	SKETCH NUMBER	IDENT. NUMBER	VOL.	SUR.	VIS.	1ST PER	2ND PER	3RD PER	1ST PER	2ND PER	3RD PER	1ST PER	2ND PER	3RD PER	1ST PER	2ND PER	3RD PER	REMARKS
B1.40	B-A		1-1300	1	X						X	/	/							REFERENCE TABLE 4.0
				1		X					X	/	/							
		TOTAL ID's for B1.40		1 *							1	1	1							

NSID COMPONENT SURVEILLANCE SCHEDULE

Effective Date 10/25/89 Process Date 03/09/90

COMPONENT: PRESSURIZER SHELL CIRC. WELDS

83S	83S		INT		EXAMINATION METHODS			FIRST INTERVAL			SECOND INTERVAL			THIRD INTERVAL			FOURTH INTERVAL			
ITEM NUMBER	CATEGORY NUMBER	DESCRIPTION	SKETCH NUMBER	IDENT. NUMBER	VOL.	SUR.	VIS.	1ST PER	2ND PER	3RD PER	1ST PER	2ND PER	3RD PER	1ST PER	2ND PER	3RD PER	1ST PER	2ND PER	3RD PER	REMARKS
B2.11	B-B		1-2100	1	X						X	/	/							REFERENCE TABLE 4.0
B2.11	B-B		1-2100	17			X				X	/	/							VT-2. REF.TABLE 4.0
		TOTAL ID's for B2.11		2 *							2	2	2							

NSID COMPONENT SURVEILLANCE SCHEDULE

Effective Date 10/25/89 Process Date 03/09/90

COMPONENT: PRESSURIZER SHELL LONG. WELDS

83S	83S		INT		EXAMINATION METHODS			FIRST INTERVAL			SECOND INTERVAL			THIRD INTERVAL			FOURTH INTERVAL			
ITEM NUMBER	CATEGORY NUMBER	DESCRIPTION	SKETCH NUMBER	IDENT. NUMBER	VOL.	SUR.	VIS.	1ST PER	2ND PER	3RD PER	1ST PER	2ND PER	3RD PER	1ST PER	2ND PER	3RD PER	1ST PER	2ND PER	3RD PER	REMARKS
B2.12	B-B		1-2100	2	X						X	/	/							REFERENCE TABLE 4.0
B2.12	B-B		1-2100	16			X				X	/	/							VT-2. REF.TABLE 4.0
		TOTAL ID's for B2.12		2 *							2	2	2							

NSID COMPONENT SURVEILLANCE SCHEDULE

Effective Date 10/25/89 Process Date 03/09/90

COMPONENT: STEAM GENERATOR TUBESHEET-TO-HEAD WELDS

83S	83S		INT		EXAMINATION METHODS			FIRST INTERVAL			SECOND INTERVAL			THIRD INTERVAL			FOURTH INTERVAL			
ITEM NUMBER	CATEGORY NUMBER	DESCRIPTION	SKETCH NUMBER	IDENT. NUMBER	VOL.	SUR.	VIS.	1ST PER	2ND PER	3RD PER	1ST PER	2ND PER	3RD PER	1ST PER	2ND PER	3RD PER	1ST PER	2ND PER	3RD PER	REMARKS
B2.40	B-B		1-3101	31-1	X						X	/	/							RFERENCE TABLE 4.0
B2.40	B-B		1-3101	32-1	X						X									
B2.40	B-B		1-3101	33-1	X						X									
B2.40	B-B		1-3101	34-1	X						X									
		TOTAL ID's for B2.40		4 *							4	1	1							

NSID COMPONENT SURVEILLANCE SCHEDULE

Effective Date 10/25/89 Process Date 03/09/90

COMPONENT: R.V. NOZZLE TO VESSEL WELDS

83S	83S		INT		EXAMINATION METHODS			FIRST INTERVAL			SECOND INTERVAL			THIRD INTERVAL			FOURTH INTERVAL			
ITEM NUMBER	CATEGORY NUMBER	DESCRIPTION	SKETCH NUMBER	IDENT. NUMBER	VOL.	SUR.	VIS.	1ST PER	2ND PER	3RD PER	1ST PER	2ND PER	3RD PER	1ST PER	2ND PER	3RD PER	1ST PER	2ND PER	3RD PER	REMARKS
B3.90	B-D		1-1100	21	X								/							REFERENCE TABLE 4.0
B3.90	B-D		1-1100	22	X						X									
B3.90	B-D		1-1100	23	X						X									
B3.90	B-D		1-1100	24	X								/							
B3.90	B-D		1-1100	25	X								/							
B3.90	B-D		1-1100	26	X						X									
B3.90	B-D		1-1100	27	X						X									
B3.90	B-D		1-1100	28	X								/							
		TOTAL ID's for B3.90		8 *							4		4							

NSID COMPONENT SURVEILLANCE SCHEDULE

Effective Date 10/25/89 Process Date 03/09/90

COMPONENT: R.V. NOZZLE INSIDE RADIUS SECTION

83S	83S		INT		EXAMINATION METHODS			FIRST INTERVAL			SECOND INTERVAL			THIRD INTERVAL			FOURTH INTERVAL			
ITEM NUMBER	CATEGORY NUMBER	DESCRIPTION	SKETCH NUMBER	IDENT. NUMBER	VOL.	SUR.	VIS.	1ST PER	2ND PER	3RD PER	1ST PER	2ND PER	3RD PER	1ST PER	2ND PER	3RD PER	1ST PER	2ND PER	3RD PER	REMARKS
B3.100	B-D		1-1100	21IR	X								/							REFERENCE TABLE 4.0
B3.100	B-D		1-1100	22IR	X						X									
B3.100	B-D		1-1100	23IR	X						X									
B3.100	B-D		1-1100	24IR	X								/							
B3.100	B-D		1-1100	25IR	X								/							
B3.100	B-D		1-1100	26IR	X						X									
B3.100	B-D		1-1100	27IR	X						X									
B3.100	B-D		1-1100	28IR	X								/							
		TOTAL ID's for B3.100		8 *							4		4							

NSID COMPONENT SURVEILLANCE SCHEDULE

Effective Date 10/25/89 Process Date 03/09/90

COMPONENT: PRESSURIZER NOZ. INSIDE RADIUS SECTION

83S	83S		INT		EXAMINATION METHODS			FIRST INTERVAL			SECOND INTERVAL			THIRD INTERVAL			FOURTH INTERVAL			
ITEM NUMBER	CATEGORY NUMBER	DESCRIPTION	SKETCH NUMBER	IDENT. NUMBER	VOL.	SUR.	VIS.	1ST PER	2ND PER	3RD PER	1ST PER	2ND PER	3RD PER	1ST PER	2ND PER	3RD PER	1ST PER	2ND PER	3RD PER	REMARKS
B3.120	B-D		1-2100	20IR			X				X	/	/							VT-2. REF.TABLE 4.0
B3.120	B-D		1-2100	21IR			X				X	/	/							
B3.120	B-D		1-2100	22IR			X				X	/	/							
B3.120	B-D		1-2100	23IR			X				X	/	/							
B3.120	B-D		1-2100	24IR			X				X	/	/							
B3.120	B-D		1-2100	25IR			X				X	/	/							
		TOTAL ID's for B3.120		6 *							6	6	6							

NSID COMPONENT SURVEILLANCE SCHEDULE

Effective Date 10/25/89 Process Date 03/09/90

COMPONENT: STEAM GEN. NOZ. INSIDE RADIUS SECTION

83S	83S		INT		EXAMINATION METHODS			FIRST INTERVAL			SECOND INTERVAL			THIRD INTERVAL			FOURTH INTERVAL			
ITEM NUMBER	CATEGORY NUMBER	DESCRIPTION	SKETCH NUMBER	IDENT. NUMBER	VOL.	SUR.	VIS.	1ST PER	2ND PER	3RD PER	1ST PER	2ND PER	3RD PER	1ST PER	2ND PER	3RD PER	1ST PER	2ND PER	3RD PER	REMARKS
B3.140	B-D		1-3101	31-1A	X						X	/								
B3.140	B-D		1-3101	31-1B	X						X	/								
B3.140	B-D		1-3101	32-1A	X						X		/							
B3.140	B-D		1-3101	32-1B	X						X		/							
B3.140	B-D		1-3101	33-1A	X						X		/							
B3.140	B-D		1-3101	33-1B	X						X									
B3.140	B-D		1-3101	34-1A	X						X									
B3.140	B-D		1-3101	34-1B	X						X									
		TOTAL ID's for B3.140		8 *							8	2	3							

NSID COMPONENT SURVEILLANCE SCHEDULE

Effective Date 10/25/89 Process Date 03/09/90

COMPONENT: CONTROL ROD DRIVES NOZZELS

83S	83S		INT		EXAMINATION METHODS			FIRST INTERVAL			SECOND INTERVAL			THIRD INTERVAL			FOURTH INTERVAL			
ITEM NUMBER	CATEGORY NUMBER	DESCRIPTION	SKETCH NUMBER	IDENT. NUMBER	VOL.	SUR.	VIS.	1ST PER	2ND PER	3RD PER	1ST PER	2ND PER	3RD PER	1ST PER	2ND PER	3RD PER	1ST PER	2ND PER	3RD PER	REMARKS
B4.12	B-E		1-1300	78(CRDN)			X						/							VT-2. EXAMINE 20 NOZ-ZLES (25%).
		TOTAL ID's for B4.12		1 *									1							

NSID COMPONENT SURVEILLANCE SCHEDULE

Effective Date 10/25/89 Process Date 03/09/90

COMPONENT: INTRUMENTATION NOZZLES

83S	83S		INT		EXAMINATION METHODS			FIRST INTERVAL			SECOND INTERVAL			THIRD INTERVAL			FOURTH INTERVAL			
ITEM NUMBER	CATEGORY NUMBER	DESCRIPTION	SKETCH NUMBER	IDENT. NUMBER	VOL.	SUR.	VIS.	1ST PER	2ND PER	3RD PER	1ST PER	2ND PER	3RD PER	1ST PER	2ND PER	3RD PER	1ST PER	2ND PER	3RD PER	REMARKS
B4.13	B-E		1-1100	58(NOZZ.)			X						/							VT-2. EXAMINE 15 NOZ-ZLES (25%).
		TOTAL ID's for B4.13		1 *									1							

NSID COMPONENT SURVEILLANCE SCHEDULE

Effective Date 10/25/89 Process Date 03/09/90

COMPONENT: PRESSURIZER HEATER PENETRATIONS

83S	83S		INT		EXAMINATION METHODS			FIRST INTERVAL			SECOND INTERVAL			THIRD INTERVAL			FOURTH INTERVAL			
ITEM NUMBER	CATEGORY NUMBER	DESCRIPTION	SKETCH NUMBER	IDENT. NUMBER	VOL.	SUR.	VIS.	1ST PER	2ND PER	3RD PER	1ST PER	2ND PER	3RD PER	1ST PER	2ND PER	3RD PER	1ST PER	2ND PER	3RD PER	REMARKS
B4.20	B-E		1-2100	HEAT.PEN.			X						/							VT-2. 78 TOTAL
		TOTAL ID's for B4.20		1 *									1							

NSID COMPONENT SURVEILLANCE SCHEDULE

Effective Date 10/25/89 Process Date 03/09/90

COMPONENT: R.V.NOZ.TO SAFE END NPS 4" AND GREATER

83S	83S		INT		EXAMINATION METHODS			FIRST INTERVAL			SECOND INTERVAL			THIRD INTERVAL			FOURTH INTERVAL			
ITEM NUMBER	CATEGORY NUMBER	DESCRIPTION	SKETCH NUMBER	IDENT. NUMBER	VOL.	SUR.	VIS.	1ST PER	2ND PER	3RD PER	1ST PER	2ND PER	3RD PER	1ST PER	2ND PER	3RD PER	1ST PER	2ND PER	3RD PER	REMARKS
B5.10	B-F		1-4100	1(DM)	X						X									REFERENCE TABLE 4.0
B5.10	B-F		1-4100	16(DM)	X								/							
B5.10	B-F		1-4200	1(DM)	X						X									
B5.10	B-F		1-4200	16(DM)	X								/							
B5.10	B-F		1-4300	1(DM)	X						X									
B5.10	B-F		1-4300	16(DM)	X								/							
B5.10	B-F		1-4400	1(DM)	X						X									
B5.10	B-F	-	1-4400	16(DM)	X								/							
		TOTAL ID's for B5.10		8 *							4		4							

NSID COMPONENT SURVEILLANCE SCHEDULE

Effective Date 10/25/89 Process Date 03/09/90

COMPONENT: PRESSURIZER - NOZ. TO SAFE END NPS.4" AND GREATER

83S	83S		INT		EXAMINATION METHODS			FIRST INTERVAL			SECOND INTERVAL			THIRD INTERVAL			FOURTH INTERVAL			
ITEM NUMBER	CATEGORY NUMBER	DESCRIPTION	SKETCH NUMBER	IDENT. NUMBER	VOL.	SUR.	VIS.	1ST PER	2ND PER	3RD PER	1ST PER	2ND PER	3RD PER	1ST PER	2ND PER	3RD PER	1ST PER	2ND PER	3RD PER	REMARKS
B5.40	B-F		1-4500	1(DM)	X						X									REFERENCE TABLE 4.0
				1(DM)		X					X									
B5.40	B-F		1-4501	1(DM)	X							/								
				1(DM)		X						/								
B5.40	B-F		1-4502	1(DM)	X						X									
				1(DM)		X					X									
B5.40	B-F		1-4503	1(DM)	X							/								
				1(DM)		X						/								
B5.40	B-F		1-4504	16(DM)	X								/							
				16(DM)		X							/							
B5.40	B-F		1-4505	1(DM)	X								/							
				1(DM)		X							/							
		TOTAL ID's for B5.40		6 *							2	2	2							

NSID COMPONENT SURVEILLANCE SCHEDULE

Effective Date 10/25/89 Process Date 03/09/90

COMPONENT: S.GEN. NOZ. TO SAFE END 4" NPS AND GREATER

83S	83S		INT		EXAMINATION METHODS			FIRST INTERVAL			SECOND INTERVAL			THIRD INTERVAL			FOURTH INTERVAL			
ITEM NUMBER	CATEGORY NUMBER	DESCRIPTION	SKETCH NUMBER	IDENT. NUMBER	VOL.	SUR.	VIS.	1ST PER	2ND PER	3RD PER	1ST PER	2ND PER	3RD PER	1ST PER	2ND PER	3RD PER	1ST PER	2ND PER	3RD PER	REMARKS
B5.70	B-F		1-4100	5(DM)	X						X	/								REFERENCE TABLE 4.0
				5(DM)		X					X	/								
B5.70	B-F		1-4100	6(DM)	X						X	/								
				6(DM)		X					X	/								
B5.70	B-F		1-4200	5(DM)	X						X	/								
				5(DM)		X					X	/								
B5.70	B-F		1-4200	6(DM)	X						X		/							
				6(DM)		X					X		/							
B5.70	B-F		1-4300	5(DM)	X						X		/							
				5(DM)		X					X		/							
B5.70	B-F		1-4300	6(DM)	X						X		/							
				6(DM)		X					X		/							
B5.70	B-F		1-4400	5(DM)	X						X									
				5(DM)		X					X									
B5.70	B-F		1-4400	6(DM)	X						X									
				6(DM)		X					X									
		TOTAL ID's for B5.70		8 *							8	3	3							

NSID COMPONENT SURVEILLANCE SCHEDULE

Effective Date 10/25/89 Process Date 03/09/90

COMPONENT: R.V. CLOSURE HEAD NUTS

83S	83S		INT		EXAMINATION METHODS			FIRST INTERVAL			SECOND INTERVAL			THIRD INTERVAL			FOURTH INTERVAL			
ITEM NUMBER	CATEGORY NUMBER	DESCRIPTION	SKETCH NUMBER	IDENT. NUMBER	VOL.	SUR.	VIS.	1ST PER	2ND PER	3RD PER	1ST PER	2ND PER	3RD PER	1ST PER	2ND PER	3RD PER	1ST PER	2ND PER	3RD PER	REMARKS
B6.10	B-G-1		1-1400	N01		X					X									
B6.10	B-G-1		1-1400	N02		X					X									
B6.10	B-G-1		1-1400	N03		X					X									
B6.10	B-G-1		1-1400	N04		X					X									
B6.10	B-G-1		1-1400	N05		X					X									
B6.10	B-G-1		1-1400	N06		X					X									
B6.10	B-G-1		1-1400	N07		X					X									
B6.10	B-G-1		1-1400	N08		X					X									
B6.10	B-G-1		1-1400	N09		X					X									
B6.10	B-G-1		1-1400	N10		X					X									
B6.10	B-G-1		1-1400	N11		X					X									
B6.10	B-G-1		1-1400	N12		X					X									
B6.10	B-G-1		1-1400	N13		X					X									
B6.10	B-G-1		1-1400	N14		X					X									
B6.10	B-G-1		1-1400	N15		X					X									
B6.10	B-G-1		1-1400	N16		X					X									
B6.10	B-G-1		1-1400	N17		X					X									
B6.10	B-G-1		1-1400	N18		X					X									
B6.10	B-G-1		1-1400	N19		X						/								
B6.10	B-G-1		1-1400	N20		X						/								
B6.10	B-G-1		1-1400	N21		X						/								
B6.10	B-G-1		1-1400	N22		X						/								
B6.10	B-G-1		1-1400	N23		X						/								
B6.10	B-G-1		1-1400	N24		X						/								
B6.10	B-G-1		1-1400	N25		X						/								
B6.10	B-G-1		1-1400	N26		X						/								
B6.10	B-G-1		1-1400	N27		X						/								
B6.10	B-G-1		1-1400	N28		X						/								
B6.10	B-G-1		1-1400	N29		X						/								
B6.10	B-G-1		1-1400	N30		X						/								
B6.10	B-G-1		1-1400	N31		X						/								
B6.10	B-G-1		1-1400	N32		X						/								
B6.10	B-G-1		1-1400	N33		X						/								
B6.10	B-G-1		1-1400	N34		X						/								
B6.10	B-G-1		1-1400	N35		X						/								
B6.10	B-G-1		1-1400	N36		X						/								
B6.10	B-G-1		1-1400	N37		X							/							
B6.10	B-G-1		1-1400	N38		X							/							
B6.10	B-G-1		1-1400	N39		X							/							
B6.10	B-G-1		1-1400	N40		X							/							
B6.10	B-G-1		1-1400	N41		X							/							
B6.10	B-G-1		1-1400	N42		X							/							
B6.10	B-G-1		1-1400	N43		X							/							

NSID COMPONENT SURVEILLANCE SCHEDULE

Effective Date 10/25/89 Process Date 03/09/90

COMPONENT: R.V. CLOSURE HEAD NUTS

83S	83S		INT		EXAMINATION METHODS			FIRST INTERVAL			SECOND INTERVAL			THIRD INTERVAL			FOURTH INTERVAL			
ITEM NUMBER	CATEGORY NUMBER	DESCRIPTION	SKETCH NUMBER	IDENT. NUMBER	VOL.	SUR.	VIS.	1ST PER	2ND PER	3RD PER	1ST PER	2ND PER	3RD PER	1ST PER	2ND PER	3RD PER	1ST PER	2ND PER	3RD PER	REMARKS
B6.10	B-G-1		1-1400	N44		X							/							
B6.10	B-G-1		1-1400	N45		X							/							
B6.10	B-G-1		1-1400	N46		X							/							
B6.10	B-G-1		1-1400	N47		X							/							
B6.10	B-G-1		1-1400	N48		X							/							
B6.10	B-G-1		1-1400	N49		X							/							
B6.10	B-G-1		1-1400	N50		X							/							
B6.10	B-G-1		1-1400	N51		X							/							
B6.10	B-G-1		1-1400	N52		X							/							
B6.10	B-G-1		1-1400	N53		X							/							
B6.10	B-G-1		1-1400	N54		X							/							
		TOTAL ID's for B6.10		54 *							18	18	18							

NSID COMPONENT SURVEILLANCE SCHEDULE

Effective Date 10/25/89 Process Date 03/09/90

COMPONENT: R.V. CLOSURE STUDS WHEN REMOVED

83S	83S		INT		EXAMINATION METHODS			FIRST INTERVAL			SECOND INTERVAL			THIRD INTERVAL			FOURTH INTERVAL			
ITEM NUMBER	CATEGORY NUMBER	DESCRIPTION	SKETCH NUMBER	IDENT. NUMBER	VOL.	SUR.	VIS.	1ST PER	2ND PER	3RD PER	1ST PER	2ND PER	3RD PER	1ST PER	2ND PER	3RD PER	1ST PER	2ND PER	3RD PER	REMARKS
B6.30	B-G-1		1-1400	S01	X						X									
				S01		X					X									
B6.30	B-G-1		1-1400	S02	X						X									
				S02		X					X									
B6.30	B-G-1		1-1400	S03	X						X									
				S03		X					X									
B6.30	B-G-1		1-1400	S04	X						X									
				S04		X					X									
B6.30	B-G-1		1-1400	S05	X						X									
				S05		X					X									
B6.30	B-G-1		1-1400	S06	X						X									
				S06		X					X									
B6.30	B-G-1		1-1400	S07	X						X									
				S07		X					X									
B6.30	B-G-1		1-1400	S08	X						X									
				S08		X					X									
B6.30	B-G-1		1-1400	S09	X						X									
				S09		X					X									
B6.30	B-G-1		1-1400	S10	X						X									
				S10		X					X									
B6.30	B-G-1		1-1400	S11	X						X									
				S11		X					X									
B6.30	B-G-1		1-1400	S12	X						X									
				S12		X					X									
B6.30	B-G-1		1-1400	S13	X						X									
				S13		X					X									
B6.30	B-G-1		1-1400	S14	X						X									
				S14		X					X									
B6.30	B-G-1		1-1400	S15	X						X									
				S15		X					X									
B6.30	B-G-1		1-1400	S16	X						X									
				S16		X					X									
B6.30	B-G-1		1-1400	S17	X						X									
				S17		X					X									
B6.30	B-G-1		1-1400	S18	X						X									
				S18		X					X									
B6.30	B-G-1		1-1400	S19	X							/								
				S19		X						/								
B6.30	B-G-1		1-1400	S20	X							/								
				S20		X						/								
B6.30	B-G-1		1-1400	S21	X							/								
				S21		X						/								

NSID COMPONENT SURVEILLANCE SCHEDULE

Effective Date 10/25/89 Process Date 03/09/90

COMPONENT: R.V. CLOSURE STUDS WHEN REMOVED

83S	83S		INT		EXAMINATION METHODS			FIRST INTERVAL			SECOND INTERVAL			THIRD INTERVAL			FOURTH INTERVAL			
ITEM NUMBER	CATEGORY NUMBER	DESCRIPTION	SKETCH NUMBER	IDENT. NUMBER	VOL.	SUR.	VIS.	1ST PER	2ND PER	3RD PER	1ST PER	2ND PER	3RD PER	1ST PER	2ND PER	3RD PER	1ST PER	2ND PER	3RD PER	REMARKS
B6.30	B-G-1		1-1400	S22	X							/								
				S22		X						/								
B6.30	B-G-1		1-1400	S23	X							/								
				S23		X						/								
B6.30	B-G-1		1-1400	S24	X							/								
				S24		X						/								
B6.30	B-G-1		1-1400	S25	X							/								
				S25		X						/								
B6.30	B-G-1		1-1400	S26	X							/								
				S26		X						/								
B6.30	B-G-1		1-1400	S27	X							/								
				S27		X						/								
B6.30	B-G-1		1-1400	S28	X							/								
				S28		X						/								
B6.30	B-G-1		1-1400	S29	X							/								
				S29		X						/								
B6.30	B-G-1		1-1400	S30	X							/								
				S30		X						/								
B6.30	B-G-1		1-1400	S31	X							/								
				S31		X						/								
B6.30	B-G-1		1-1400	S32	X							/								
				S32		X						/								
B6.30	B-G-1		1-1400	S33	X							/								
				S33		X						/								
B6.30	B-G-1		1-1400	S34	X							/								
				S34		X						/								
B6.30	B-G-1		1-1400	S35	X							/								
				S35		X						/								
B6.30	B-G-1		1-1400	S36	X							/								
				S36		X						/								
B6.30	B-G-1		1-1400	S37	X								/							
				S37		X							/							
B6.30	B-G-1		1-1400	S38	X								/							
				S38		X							/							
B6.30	B-G-1		1-1400	S39	X								/							
				S39		X							/							
B6.30	B-G-1		1-1400	S40	X								/							
				S40		X							/							
B6.30	B-G-1		1-1400	S41	X								/							
				S41		X							/							
B6.30	B-G-1		1-1400	S42	X								/							
				S42		X							/							

NSID COMPONENT SURVEILLANCE SCHEDULE

Effective Date 10/25/89 Process Date 03/09/90

COMPONENT: R.V. CLOSURE STUDS WHEN REMOVED

83S	83S		INT		EXAMINATION METHODS			FIRST INTERVAL			SECOND INTERVAL			THIRD INTERVAL			FOURTH INTERVAL			
ITEM NUMBER	CATEGORY NUMBER	DESCRIPTION	SKETCH NUMBER	IDENT. NUMBER	VOL.	SUR.	VIS.	1ST PER	2ND PER	3RD PER	1ST PER	2ND PER	3RD PER	1ST PER	2ND PER	3RD PER	1ST PER	2ND PER	3RD PER	REMARKS
B6.30	B-G-1		1-1400	S43	X								/							
				S43		X							/							
B6.30	B-G-1		1-1400	S44	X								/							
				S44		X							/							
B6.30	B-G-1		1-1400	S45	X								/							
				S45		X							/							
B6.30	B-G-1		1-1400	S46	X								/							
				S46		X							/							
B6.30	B-G-1		1-1400	S47	X								/							
				S47		X							/							
B6.30	B-G-1		1-1400	S48	X								/							
				S48		X							/							
B6.30	B-G-1		1-1400	S49	X								/							
				S49		X							/							
B6.30	B-G-1		1-1400	S50	X								/							
				S50		X							/							
B6.30	B-G-1		1-1400	S51	X								/							
				S51		X							/							
B6.30	B-G-1		1-1400	S52	X								/							
				S52		X							/							
B6.30	B-G-1		1-1400	S53	X								/							
				S53		X							/							
B6.30	B-G-1		1-1400	S54	X								/							
				S54		X							/							
		TOTAL ID's for B6.30		54 *							18	18	18							

NSID COMPONENT SURVEILLANCE SCHEDULE

Effective Date 10/25/89 Process Date 03/09/90

COMPONENT: R.V. THREADS IN FLANGE

83S	83S		INT		EXAMINATION METHODS			FIRST INTERVAL			SECOND INTERVAL			THIRD INTERVAL			FOURTH INTERVAL			
ITEM NUMBER	CATEGORY NUMBER	DESCRIPTION	SKETCH NUMBER	IDENT. NUMBER	VOL.	SUR.	VIS.	1ST PER	2ND PER	3RD PER	1ST PER	2ND PER	3RD PER	1ST PER	2ND PER	3RD PER	1ST PER	2ND PER	3RD PER	REMARKS
B6.40	B-G-1		1-1100	L01	X						X									
B6.40	B-G-1		1-1100	L02	X						X									
B6.40	B-G-1		1-1100	L03	X						X									
B6.40	B-G-1		1-1100	L04	X						X									
B6.40	B-G-1		1-1100	L05	X						X									
B6.40	B-G-1		1-1100	L06	X						X									
B6.40	B-G-1		1-1100	L07	X						X									
B6.40	B-G-1		1-1100	L08	X								/							
B6.40	B-G-1		1-1100	L09	X								/							
B6.40	B-G-1		1-1100	L10	X								/							
B6.40	B-G-1		1-1100	L11			X						/							VT-1. REF.TABLE 4.0
B6.40	B-G-1		1-1100	L12			X						/							VT-1. REF.TABLE 4.0
B6.40	B-G-1		1-1100	L13			X						/							VT-1. REF.TABLE 4.0
B6.40	B-G-1		1-1100	L14	X								/							
B6.40	B-G-1		1-1100	L15	X								/							
B6.40	B-G-1		1-1100	L16	X								/							
B6.40	B-G-1		1-1100	L17	X								/							
B6.40	B-G-1		1-1100	L18	X								/							
B6.40	B-G-1		1-1100	L19	X								/							
B6.40	B-G-1		1-1100	L20	X								/							
B6.40	B-G-1		1-1100	L21	X						X									
B6.40	B-G-1		1-1100	L22	X						X									
B6.40	B-G-1		1-1100	L23	X						X									
B6.40	B-G-1		1-1100	L24	X						X									
B6.40	B-G-1		1-1100	L25	X						X									
B6.40	B-G-1		1-1100	L26	X						X									
B6.40	B-G-1		1-1100	L27	X						X									
B6.40	B-G-1		1-1100	L28	X						X									
B6.40	B-G-1		1-1100	L29	X						X									
B6.40	B-G-1		1-1100	L30	X						X									
B6.40	B-G-1		1-1100	L31	X								/							
B6.40	B-G-1		1-1100	L32	X								/							
B6.40	B-G-1		1-1100	L33	X								/							
B6.40	B-G-1		1-1100	L34	X								/							
B6.40	B-G-1		1-1100	L35	X						X									
B6.40	B-G-1		1-1100	L36	X						X									
B6.40	B-G-1		1-1100	L37	X						X									
B6.40	B-G-1		1-1100	L38	X						X									
B6.40	B-G-1		1-1100	L39	X						X									
B6.40	B-G-1		1-1100	L40	X						X									
B6.40	B-G-1		1-1100	L41	X						X									
B6.40	B-G-1		1-1100	L42	X						X									
B6.40	B-G-1		1-1100	L43			X						/							VT-1. REF.TABLE 4.0

NSID COMPONENT SURVEILLANCE SCHEDULE

Effective Date 10/25/89 Process Date 03/09/90

COMPONENT: R.V. THREADS IN FLANGE

83S	83S		INT		EXAMINATION METHODS			FIRST INTERVAL			SECOND INTERVAL			THIRD INTERVAL			FOURTH INTERVAL			
ITEM NUMBER	CATEGORY NUMBER	DESCRIPTION	SKETCH NUMBER	IDENT. NUMBER	VOL.	SUR.	VIS.	1ST PER	2ND PER	3RD PER	1ST PER	2ND PER	3RD PER	1ST PER	2ND PER	3RD PER	1ST PER	2ND PER	3RD PER	REMARKS
B6.40	B-G-1		1-1100	L44			X						/							VT-1. REF.TABLE 4.0
B6.40	B-G-1		1-1100	L45			X						/							VT-1. REF.TABLE 4.0
B6.40	B-G-1		1-1100	L46	X								/							
B6.40	B-G-1		1-1100	L47	X								/							
B6.40	B-G-1		1-1100	L48	X								/							
B6.40	B-G-1		1-1100	L49	X								/							
B6.40	B-G-1		1-1100	L50	X								/							
B6.40	B-G-1		1-1100	L51	X								/							
B6.40	B-G-1		1-1100	L52	X								/							
B6.40	B-G-1		1-1100	L53	X						X									
B6.40	B-G-1		1-1100	L54	X						X									
		TOTAL ID's for B6.40		54 *							27		27							

NSID COMPONENT SURVEILLANCE SCHEDULE

Effective Date 10/25/89 Process Date 03/09/90

COMPONENT: R.V. CLOSURE WASHERS, BUSHINGS

83S	83S		INT		EXAMINATION METHODS			FIRST INTERVAL			SECOND INTERVAL			THIRD INTERVAL			FOURTH INTERVAL			
ITEM NUMBER	CATEGORY NUMBER	DESCRIPTION	SKETCH NUMBER	IDENT. NUMBER	VOL.	SUR.	VIS.	1ST PER	2ND PER	3RD PER	1ST PER	2ND PER	3RD PER	1ST PER	2ND PER	3RD PER	1ST PER	2ND PER	3RD PER	REMARKS
B6.50	B-G-1		1-1400	W01			X				X									VT-1
B6.50	B-G-1		1-1400	W02			X				X									
B6.50	B-G-1		1-1400	W03			X				X									
B6.50	B-G-1		1-1400	W04			X				X									
B6.50	B-G-1		1-1400	W05			X				X									
B6.50	B-G-1		1-1400	W06			X				X									
B6.50	B-G-1		1-1400	W07			X				X									
B6.50	B-G-1		1-1400	W08			X				X									
B6.50	B-G-1		1-1400	W09			X				X									
B6.50	B-G-1		1-1400	W10			X				X									
B6.50	B-G-1		1-1400	W11			X				X									
B6.50	B-G-1		1-1400	W12			X				X									
B6.50	B-G-1		1-1400	W13			X				X									
B6.50	B-G-1		1-1400	W14			X				X									
B6.50	B-G-1		1-1400	W15			X				X									
B6.50	B-G-1		1-1400	W16			X				X									
B6.50	B-G-1		1-1400	W17			X				X									
B6.50	B-G-1		1-1400	W18			X				X									
B6.50	B-G-1		1-1400	W19			X					/								
B6.50	B-G-1		1-1400	W20			X					/								
B6.50	B-G-1		1-1400	W21			X					/								
B6.50	B-G-1		1-1400	W22			X					/								
B6.50	B-G-1		1-1400	W23			X					/								
B6.50	B-G-1		1-1400	W24			X					/								
B6.50	B-G-1		1-1400	W25			X					/								
B6.50	B-G-1		1-1400	W26			X					/								
B6.50	B-G-1		1-1400	W27			X					/								
B6.50	B-G-1		1-1400	W28			X					/								
B6.50	B-G-1		1-1400	W29			X					/								
B6.50	B-G-1		1-1400	W30			X					/								
B6.50	B-G-1		1-1400	W31			X					/								
B6.50	B-G-1		1-1400	W32			X					/								
B6.50	B-G-1		1-1400	W33			X					/								
B6.50	B-G-1		1-1400	W34			X					/								
B6.50	B-G-1		1-1400	W35			X					/								
B6.50	B-G-1		1-1400	W36			X					/								
B6.50	B-G-1		1-1400	W37			X						/							
B6.50	B-G-1		1-1400	W38			X						/							
B6.50	B-G-1		1-1400	W39			X						/							
B6.50	B-G-1		1-1400	W40			X						/							
B6.50	B-G-1		1-1400	W41			X						/							
B6.50	B-G-1		1-1400	W42			X						/							
B6.50	B-G-1		1-1400	W43			X						/							

NSID COMPONENT SURVEILLANCE SCHEDULE

Effective Date 10/25/89 Process Date 03/09/90

COMPONENT: R.V. CLOSURE WASHERS, BUSHINGS

83S	83S		INT		EXAMINATION METHODS			FIRST INTERVAL			SECOND INTERVAL			THIRD INTERVAL			FOURTH INTERVAL			
ITEM NUMBER	CATEGORY NUMBER	DESCRIPTION	SKETCH NUMBER	IDENT. NUMBER	VOL.	SUR.	VIS.	1ST PER	2ND PER	3RD PER	1ST PER	2ND PER	3RD PER	1ST PER	2ND PER	3RD PER	1ST PER	2ND PER	3RD PER	REMARKS
B6.50	B-G-1		1-1400	W44			X						/							
B6.50	B-G-1		1-1400	W45			X						/							
B6.50	B-G-1		1-1400	W46			X						/							
B6.50	B-G-1		1-1400	W47			X						/							
B6.50	B-G-1		1-1400	W48			X						/							
B6.50	B-G-1		1-1400	W49			X						/							
B6.50	B-G-1		1-1400	W50			X						/							
B6.50	B-G-1		1-1400	W51			X						/							
B6.50	B-G-1		1-1400	W52			X						/							
B6.50	B-G-1		1-1400	W53			X						/							
B6.50	B-G-1		1-1400	W54			X						/							
		TOTAL ID's for B6.50		54 *							18	18	18							

NSID COMPONENT SURVEILLANCE SCHEDULE

Effective Date 10/25/89 Process Date 03/09/90

COMPONENT: PUMP BOLTS AND STUDS MAIN FLANGE

83S	83S		INT		EXAMINATION METHODS			FIRST INTERVAL			SECOND INTERVAL			THIRD INTERVAL			FOURTH INTERVAL			
ITEM NUMBER	CATEGORY NUMBER	DESCRIPTION	SKETCH NUMBER	IDENT. NUMBER	VOL.	SUR.	VIS.	1ST PER	2ND PER	3RD PER	1ST PER	2ND PER	3RD PER	1ST PER	2ND PER	3RD PER	1ST PER	2ND PER	3RD PER	REMARKS
B6.180	B-G-1		1-5100	31-B01	X						X									
B6.180	B-G-1		1-5100	31-B02	X						X									
B6.180	B-G-1		1-5100	31-B03	X						X									
B6.180	B-G-1		1-5100	31-B04	X						X									
B6.180	B-G-1		1-5100	31-B05	X						X									
B6.180	B-G-1		1-5100	31-B06	X						X									
B6.180	B-G-1		1-5100	31-B07	X						X									
B6.180	B-G-1		1-5100	31-B08	X						X									
B6.180	B-G-1		1-5100	31-B09	X						X									
B6.180	B-G-1		1-5100	31-B10	X															REFERENCE TABLE 4.0
B6.180	B-G-1		1-5100	31-B11	X															REFERENCE TABLE 4.0
B6.180	B-G-1		1-5100	31-B12	X						X									
B6.180	B-G-1		1-5100	31-B13	X						X									
B6.180	B-G-1		1-5100	31-B14	X						X									
B6.180	B-G-1		1-5100	31-B15	X						X									
B6.180	B-G-1		1-5100	31-B16	X						X									
B6.180	B-G-1		1-5100	31-B17	X						X									
B6.180	B-G-1		1-5100	31-B18	X						X									
B6.180	B-G-1		1-5100	31-B19	X						X									
B6.180	B-G-1		1-5100	31-B20	X						X									
B6.180	B-G-1		1-5100	31-B21	X						X									
B6.180	B-G-1		1-5100	31-B22	X						X									
B6.180	B-G-1		1-5100	31-B23	X						X									
B6.180	B-G-1		1-5100	31-B24	X						X									
B6.180	B-G-1		1-5100	32-B01	X							/								
B6.180	B-G-1		1-5100	32-B02	X							/								
B6.180	B-G-1		1-5100	32-B03	X							/								
B6.180	B-G-1		1-5100	32-B04	X							/								
B6.180	B-G-1		1-5100	32-B05	X							/								
B6.180	B-G-1		1-5100	32-B06	X							/								
B6.180	B-G-1		1-5100	32-B07	X							/								
B6.180	B-G-1		1-5100	32-B08	X							/								
B6.180	B-G-1		1-5100	32-B09	X							/								
B6.180	B-G-1		1-5100	32-B10	X							/								
B6.180	B-G-1		1-5100	32-B11	X							/								
B6.180	B-G-1		1-5100	32-B12	X							/								
B6.180	B-G-1		1-5100	32-B13	X							/								
B6.180	B-G-1		1-5100	32-B14	X							/								
B6.180	B-G-1		1-5100	32-B15	X							/								
B6.180	B-G-1		1-5100	32-B16	X							/								
B6.180	B-G-1		1-5100	32-B17	X							/								
B6.180	B-G-1		1-5100	32-B18	X							/								
B6.180	B-G-1		1-5100	32-B19	X							/								

NSID COMPONENT SURVEILLANCE SCHEDULE

Effective Date 10/25/89 Process Date 03/09/90

COMPONENT: PUMP BOLTS AND STUDS MAIN FLANGE

83S	83S		INT		EXAMINATION METHODS			FIRST INTERVAL			SECOND INTERVAL			THIRD INTERVAL			FOURTH INTERVAL			
ITEM NUMBER	CATEGORY NUMBER	DESCRIPTION	SKETCH NUMBER	IDENT. NUMBER	VOL.	SUR.	VIS.	1ST PER	2ND PER	3RD PER	1ST PER	2ND PER	3RD PER	1ST PER	2ND PER	3RD PER	1ST PER	2ND PER	3RD PER	REMARKS
B6.180	B-G-1		1-5100	32-B20	X							/								
B6.180	B-G-1		1-5100	32-B21	X							/								
B6.180	B-G-1		1-5100	32-B22	X							/								
B6.180	B-G-1		1-5100	32-B23	X							/								
B6.180	B-G-1		1-5100	32-B24	X							/								
B6.180	B-G-1		1-5100	33-B01	X								/							
B6.180	B-G-1		1-5100	33-B02	X								/							
B6.180	B-G-1		1-5100	33-B03	X								/							
B6.180	B-G-1		1-5100	33-B04	X								/							
B6.180	B-G-1		1-5100	33-B05	X								/							
B6.180	B-G-1		1-5100	33-B06	X								/							
B6.180	B-G-1		1-5100	33-B07	X								/							
B6.180	B-G-1		1-5100	33-B08	X								/							
B6.180	B-G-1		1-5100	33-B09	X								/							
B6.180	B-G-1		1-5100	33-B10	X								/							
B6.180	B-G-1		1-5100	33-B11	X								/							
B6.180	B-G-1		1-5100	33-B12	X								/							
B6.180	B-G-1		1-5100	33-B13	X								/							
B6.180	B-G-1		1-5100	33-B14	X								/							
B6.180	B-G-1		1-5100	33-B15	X								/							
B6.180	B-G-1		1-5100	33-B16	X								/							
B6.180	B-G-1		1-5100	33-B17	X								/							
B6.180	B-G-1		1-5100	33-B18	X								/							
B6.180	B-G-1		1-5100	33-B19	X								/							
B6.180	B-G-1		1-5100	33-B20	X								/							
B6.180	B-G-1		1-5100	33-B21	X								/							
B6.180	B-G-1		1-5100	33-B22	X								/							
B6.180	B-G-1		1-5100	33-B23	X								/							
B6.180	B-G-1		1-5100	33-B24	X								/							
B6.180	B-G-1		1-5100	34-B01	X								/							
B6.180	B-G-1		1-5100	34-B02	X								/							
B6.180	B-G-1		1-5100	34-B03	X								/							
B6.180	B-G-1		1-5100	34-B04	X								/							
B6.180	B-G-1		1-5100	34-B05	X								/							
B6.180	B-G-1		1-5100	34-B06	X								/							
B6.180	B-G-1		1-5100	34-B07	X								/							
B6.180	B-G-1		1-5100	34-B08	X								/							
B6.180	B-G-1		1-5100	34-B09	X								/							
B6.180	B-G-1		1-5100	34-B10	X								/							
B6.180	B-G-1		1-5100	34-B11	X								/							
B6.180	B-G-1		1-5100	34-B12	X								/							
B6.180	B-G-1		1-5100	34-B13	X								/							
B6.180	B-G-1		1-5100	34-B14	X								/							

NSID COMPONENT SURVEILLANCE SCHEDULE

Effective Date 10/25/89 Process Date 03/09/90

COMPONENT: PUMP BOLTS AND STUDS MAIN FLANGE

83S	83S		INT		EXAMINATION METHODS			FIRST INTERVAL			SECOND INTERVAL			THIRD INTERVAL			FOURTH INTERVAL			
ITEM NUMBER	CATEGORY NUMBER	DESCRIPTION	SKETCH NUMBER	IDENT. NUMBER	VOL.	SUR.	VIS.	1ST PER	2ND PER	3RD PER	1ST PER	2ND PER	3RD PER	1ST PER	2ND PER	3RD PER	1ST PER	2ND PER	3RD PER	REMARKS
B6.180	B-G-1		1-5100	34-B15	X								/							
B6.180	B-G-1		1-5100	34-B16	X								/							
B6.180	B-G-1		1-5100	34-B17	X								/							
B6.180	B-G-1		1-5100	34-B18	X								/							
B6.180	B-G-1		1-5100	34-B19	X								/							
B6.180	B-G-1		1-5100	34-B20	X								/							
B6.180	B-G-1		1-5100	34-B21	X								/							
B6.180	B-G-1		1-5100	34-B22	X								/							
B6.180	B-G-1		1-5100	34-B23	X								/							
B6.180	B-G-1		1-5100	34-B24	X								/							
		TOTAL ID's for B6.180		96 *							22	24	48							

NSID COMPONENT SURVEILLANCE SCHEDULE

Effective Date 10/25/89 Process Date 03/09/90

COMPONENT: PUMP FLANGE SURFACE WHEN DISASSEMBLED

83S	83S		INT		EXAMINATION METHODS			FIRST INTERVAL			SECOND INTERVAL			THIRD INTERVAL			FOURTH INTERVAL			
ITEM NUMBER	CATEGORY NUMBER	DESCRIPTION	SKETCH NUMBER	IDENT. NUMBER	VOL.	SUR.	VIS.	1ST PER	2ND PER	3RD PER	1ST PER	2ND PER	3RD PER	1ST PER	2ND PER	3RD PER	1ST PER	2ND PER	3RD PER	REMARKS
B6.190	B-G-1		1-5100	1-F1			X													VT-1
B6.190	B-G-1		1-5100	2-F1			X													
B6.190	B-G-1		1-5100	3-F1			X													
B6.190	B-G-1		1-5100	4-F1			X													
		TOTAL ID's for B6.190		4 *																

NSID COMPONENT SURVEILLANCE SCHEDULE

Effective Date 10/25/89 Process Date 03/09/90

COMPONENT: PUMP NUTS, BUSHING, AND WASHERS

83S	83S		INT		EXAMINATION METHODS			FIRST INTERVAL			SECOND INTERVAL			THIRD INTERVAL			FOURTH INTERVAL			
ITEM NUMBER	CATEGORY NUMBER	DESCRIPTION	SKETCH NUMBER	IDENT. NUMBER	VOL.	SUR.	VIS.	1ST PER	2ND PER	3RD PER	1ST PER	2ND PER	3RD PER	1ST PER	2ND PER	3RD PER	1ST PER	2ND PER	3RD PER	REMARKS
B6.200	B-G-1		1-5100	31-B01N			X				X									VT-1
B6.200	B-G-1		1-5100	31-B02N			X				X									
B6.200	B-G-1		1-5100	31-B03N			X				X									
B6.200	B-G-1		1-5100	31-B04N			X				X									
B6.200	B-G-1		1-5100	31-B05N			X				X									
B6.200	B-G-1		1-5100	31-B06N			X				X									
B6.200	B-G-1		1-5100	31-B07N			X				X									
B6.200	B-G-1		1-5100	31-B08N			X				X									
B6.200	B-G-1		1-5100	31-B09N			X				X									
B6.200	B-G-1		1-5100	31-B10N			X				X									
B6.200	B-G-1		1-5100	31-B11N			X				X									
B6.200	B-G-1		1-5100	31-B12N			X				X									
B6.200	B-G-1		1-5100	31-B13N			X				X									
B6.200	B-G-1		1-5100	31-B14N			X				X									
B6.200	B-G-1		1-5100	31-B15N			X				X									
B6.200	B-G-1		1-5100	31-B16N			X				X									
B6.200	B-G-1		1-5100	31-B17N			X				X									
B6.200	B-G-1		1-5100	31-B18N			X				X									
B6.200	B-G-1		1-5100	31-B19N			X				X									
B6.200	B-G-1		1-5100	31-B20N			X				X									
B6.200	B-G-1		1-5100	31-B21N			X				X									
B6.200	B-G-1		1-5100	31-B22N			X				X									
B6.200	B-G-1		1-5100	31-B23N			X				X									
B6.200	B-G-1		1-5100	31-B24N			X				X									
B6.200	B-G-1		1-5100	32-B01N			X					/								
B6.200	B-G-1		1-5100	32-B02N			X					/								
B6.200	B-G-1		1-5100	32-B03N			X					/								
B6.200	B-G-1		1-5100	32-B04N			X					/								
B6.200	B-G-1		1-5100	32-B05N			X					/								
B6.200	B-G-1		1-5100	32-B06N			X					/								
B6.200	B-G-1		1-5100	32-B07N			X					/								
B6.200	B-G-1		1-5100	32-B08N			X					/								
B6.200	B-G-1		1-5100	32-B09N			X					/								
B6.200	B-G-1		1-5100	32-B10N			X					/								
B6.200	B-G-1		1-5100	32-B11N			X					/								
B6.200	B-G-1		1-5100	32-B12N			X					/								
B6.200	B-G-1		1-5100	32-B13N			X					/								
B6.200	B-G-1		1-5100	32-B14N			X					/								
B6.200	B-G-1		1-5100	32-B15N			X					/								
B6.200	B-G-1		1-5100	32-B16N			X					/								
B6.200	B-G-1		1-5100	32-B17N			X					/								
B6.200	B-G-1		1-5100	32-B18N			X					/								
B6.200	B-G-1		1-5100	32-B19N			X					/								

NSID COMPONENT SURVEILLANCE SCHEDULE

Effective Date 10/25/89 Process Date 03/09/90

COMPONENT: PUMP NUTS, BUSHING, AND WASHERS

83S	83S		INT		EXAMINATION METHODS			FIRST INTERVAL			SECOND INTERVAL			THIRD INTERVAL			FOURTH INTERVAL			
ITEM NUMBER	CATEGORY NUMBER	DESCRIPTION	SKETCH NUMBER	IDENT. NUMBER	VOL.	SUR.	VIS.	1ST PER	2ND PER	3RD PER	1ST PER	2ND PER	3RD PER	1ST PER	2ND PER	3RD PER	1ST PER	2ND PER	3RD PER	REMARKS
B6.200	B-G-1		1-5100	32-B20N			X					/								
B6.200	B-G-1		1-5100	32-B21N			X					/								
B6.200	B-G-1		1-5100	32-B22N			X					/								
B6.200	B-G-1		1-5100	32-B23N			X					/								
B6.200	B-G-1		1-5100	32-B24N			X					/								
B6.200	B-G-1		1-5100	33-B01N			X						/							
B6.200	B-G-1		1-5100	33-B02N			X						/							
B6.200	B-G-1		1-5100	33-B03N			X						/							
B6.200	B-G-1		1-5100	33-B04N			X						/							
B6.200	B-G-1		1-5100	33-B05N			X						/							
B6.200	B-G-1		1-5100	33-B06N			X						/							
B6.200	B-G-1		1-5100	33-B07N			X						/							
B6.200	B-G-1		1-5100	33-B08N			X						/							
B6.200	B-G-1		1-5100	33-B09N			X						/							
B6.200	B-G-1		1-5100	33-B10N			X						/							
B6.200	B-G-1		1-5100	33-B11N			X						/							
B6.200	B-G-1		1-5100	33-B12N			X						/							
B6.200	B-G-1		1-5100	33-B13N			X						/							
B6.200	B-G-1		1-5100	33-B14N			X						/							
B6.200	B-G-1		1-5100	33-B15N			X						/							
B6.200	B-G-1		1-5100	33-B16N			X						/							
B6.200	B-G-1		1-5100	33-B17N			X						/							
B6.200	B-G-1		1-5100	33-B18N			X						/							
B6.200	B-G-1		1-5100	33-B19N			X						/							
B6.200	B-G-1		1-5100	33-B20N			X						/							
B6.200	B-G-1		1-5100	33-B21N			X						/							
B6.200	B-G-1		1-5100	33-B22N			X						/							
B6.200	B-G-1		1-5100	33-B23N			X						/							
B6.200	B-G-1		1-5100	33-B24N			X						/							
B6.200	B-G-1		1-5100	34-B01N			X						/							
B6.200	B-G-1		1-5100	34-B02N			X						/							
B6.200	B-G-1		1-5100	34-B03N			X						/							
B6.200	B-G-1		1-5100	34-B04N			X						/							
B6.200	B-G-1		1-5100	34-B05N			X						/							
B6.200	B-G-1		1-5100	34-B06N			X						/							
B6.200	B-G-1		1-5100	34-B07N			X						/							
B6.200	B-G-1		1-5100	34-B08N			X						/							
B6.200	B-G-1		1-5100	34-B09N			X						/							
B6.200	B-G-1		1-5100	34-B10N			X						/							
B6.200	B-G-1		1-5100	34-B11N			X						/							
B6.200	B-G-1		1-5100	34-B12N			X						/							
B6.200	B-G-1		1-5100	34-B13N			X						/							
B6.200	B-G-1		1-5100	34-B14N			X						/							

NSID COMPONENT SURVEILLANCE SCHEDULE

Effective Date 10/25/89 Process Date 03/09/90

COMPONENT: PUMP NUTS, BUSHING, AND WASHERS

83S	83S		INT		EXAMINATION METHODS			FIRST INTERVAL			SECOND INTERVAL			THIRD INTERVAL			FOURTH INTERVAL			
ITEM NUMBER	CATEGORY NUMBER	DESCRIPTION	SKETCH NUMBER	IDENT. NUMBER	VOL.	SUR.	VIS.	1ST PER	2ND PER	3RD PER	1ST PER	2ND PER	3RD PER	1ST PER	2ND PER	3RD PER	1ST PER	2ND PER	3RD PER	REMARKS
B6.200	B-G-1		1-5100	34-B15N			X						/							
B6.200	B-G-1		1-5100	34-B16N			X						/							
B6.200	B-G-1		1-5100	34-B17N			X						/							
B6.200	B-G-1		1-5100	34-B18N			X						/							
B6.200	B-G-1		1-5100	34-B19N			X						/							
B6.200	B-G-1		1-5100	34-B20N			X						/							
B6.200	B-G-1		1-5100	34-B21N			X						/							
B6.200	B-G-1		1-5100	34-B22N			X						/							
B6.200	B-G-1		1-5100	34-B23N			X						/							
B6.200	B-G-1		1-5100	34-B24N			X						/							
		TOTAL ID's for B6.200		96 *							24	24	48							

NSID COMPONENT SURVEILLANCE SCHEDULE

Effective Date 10/25/89 Process Date 03/09/90

COMPONENT: PRESSURIZER- BOLTS, STUDS, AND NUTS

83S	83S		INT		EXAMINATION METHODS			FIRST INTERVAL			SECOND INTERVAL			THIRD INTERVAL			FOURTH INTERVAL			
ITEM NUMBER	CATEGORY NUMBER	DESCRIPTION	SKETCH NUMBER	IDENT. NUMBER	VOL.	SUR.	VIS.	1ST PER	2ND PER	3RD PER	1ST PER	2ND PER	3RD PER	1ST PER	2ND PER	3RD PER	1ST PER	2ND PER	3RD PER	REMARKS
B7.20	B-G-2		1-2100	B01			X				X									VT-1
B7.20	B-G-2		1-2100	B02			X				X									
B7.20	B-G-2		1-2100	B03			X				X									
B7.20	B-G-2		1-2100	B04			X				X									
B7.20	B-G-2		1-2100	B05			X				X									
B7.20	B-G-2		1-2100	B06			X					/								
B7.20	B-G-2		1-2100	B07			X					/								
B7.20	B-G-2		1-2100	B08			X					/								
B7.20	B-G-2		1-2100	B09			X					/								
B7.20	B-G-2		1-2100	B10			X					/								
B7.20	B-G-2		1-2100	B11			X						/							
B7.20	B-G-2		1-2100	B12			X						/							
B7.20	B-G-2		1-2100	B13			X						/							
B7.20	B-G-2		1-2100	B14			X						/							
B7.20	B-G-2		1-2100	B15			X						/							
B7.20	B-G-2		1-2100	B16			X						/							
		TOTAL ID's for B7.20		16 *							5	5	6							

NSID COMPONENT SURVEILLANCE SCHEDULE

Effective Date 10/25/89 Process Date 03/09/90

COMPONENT: STM. GEN. BOLTS, STUDS, AND NUTS

83S	83S		INT		EXAMINATION METHODS			FIRST INTERVAL			SECOND INTERVAL			THIRD INTERVAL			FOURTH INTERVAL			
ITEM NUMBER	CATEGORY NUMBER	DESCRIPTION	SKETCH NUMBER	IDENT. NUMBER	VOL.	SUR.	VIS.	1ST PER	2ND PER	3RD PER	1ST PER	2ND PER	3RD PER	1ST PER	2ND PER	3RD PER	1ST PER	2ND PER	3RD PER	REMARKS
B7.30	B-G-2		1-3101	LK90A01			X				X	/								VT-1. IDENTIFICATION FOR 128 STUDS, 128 NUTS AND 256 WASHERS.
B7.30	B-G-2		1-3101	LK90A02			X				X	/								
B7.30	B-G-2		1-3101	LK90A03			X				X	/								
B7.30	B-G-2		1-3101	LK90A04			X				X	/								
B7.30	B-G-2		1-3101	LK90A05			X				X	/								
B7.30	B-G-2		1-3101	LK90A06			X				X	/								
B7.30	B-G-2		1-3101	LK90A07			X				X	/								
B7.30	B-G-2		1-3101	LK90A08			X				X	/								
B7.30	B-G-2		1-3101	LK90A09			X				X	/								
B7.30	B-G-2		1-3101	LK90A10			X				X	/								
B7.30	B-G-2		1-3101	LK90A11			X				X	/								
B7.30	B-G-2		1-3101	LK90A12			X				X	/								
B7.30	B-G-2		1-3101	LK90A13			X				X	/								
B7.30	B-G-2		1-3101	LK90A14			X				X	/								
B7.30	B-G-2		1-3101	LK90A15			X				X	/								
B7.30	B-G-2		1-3101	LK90A16			X				X	/								
B7.30	B-G-2		1-3101	LK90A17			X				X	/								
B7.30	B-G-2		1-3101	LK90A18			X				X	/								
B7.30	B-G-2		1-3101	LK90A19			X				X	/								
B7.30	B-G-2		1-3101	LK90A20			X				X	/								
B7.30	B-G-2		1-3101	LK90A21			X				X	/								
B7.30	B-G-2		1-3101	LK90A22			X				X	/								
B7.30	B-G-2		1-3101	LK90A23			X				X	/								
B7.30	B-G-2		1-3101	LK90A24			X				X	/								
B7.30	B-G-2		1-3101	LK90A25			X				X	/								
B7.30	B-G-2		1-3101	LK90A26			X				X	/								
B7.30	B-G-2		1-3101	LK90A27			X				X	/								
B7.30	B-G-2		1-3101	LK90A28			X				X	/								
B7.30	B-G-2		1-3101	LK90A29			X				X	/								
B7.30	B-G-2		1-3101	LK90A30			X				X		/							
B7.30	B-G-2		1-3101	LK90A31			X				X		/							
B7.30	B-G-2		1-3101	LK90A32			X				X	/								
B7.30	B-G-2		1-3101	LK90A33			X				X	/								
B7.30	B-G-2		1-3101	LK90A34			X				X	/								
B7.30	B-G-2		1-3101	LK90A35			X				X		/							
B7.30	B-G-2		1-3101	LK90A36			X				X		/							
B7.30	B-G-2		1-3101	LK90A42			X				X		/							
B7.30	B-G-2		1-3101	LK90A54			X				X									
B7.30	B-G-2		1-3101	LK90A58			X				X									
B7.30	B-G-2		1-3101	LK90A61			X				X									
B7.30	B-G-2		1-3101	LK90A64			X				X									

NSID COMPONENT SURVEILLANCE SCHEDULE

Effective Date 10/25/89 Process Date 03/09/90

COMPONENT: STM. GEN. BOLTS, STUDS, AND NUTS

83S	83S		INT		EXAMINATION METHODS			FIRST INTERVAL			SECOND INTERVAL			THIRD INTERVAL			FOURTH INTERVAL			
ITEM NUMBER	CATEGORY NUMBER	DESCRIPTION	SKETCH NUMBER	IDENT. NUMBER	VOL.	SUR.	VIS.	1ST PER	2ND PER	3RD PER	1ST PER	2ND PER	3RD PER	1ST PER	2ND PER	3RD PER	1ST PER	2ND PER	3RD PER	REMARKS
B7.30	B-G-2		1-3101	LK90A68			X				X									
B7.30	B-G-2		1-3101	LK90A74			X				X		/							
B7.30	B-G-2		1-3101	LK90A75			X				X		/							
B7.30	B-G-2		1-3101	LK90A76			X				X		/							
B7.30	B-G-2		1-3101	LK90A77			X				X		/							
B7.30	B-G-2		1-3101	LK90A78			X				X		/							
B7.30	B-G-2		1-3101	LK90A79			X				X		/							
B7.30	B-G-2		1-3101	LK90A80			X				X		/							
B7.30	B-G-2		1-3101	LK90A81			X				X		/							
B7.30	B-G-2		1-3101	LK90A82			X				X									
B7.30	B-G-2		1-3101	LK90A83			X				X		/							
B7.30	B-G-2		1-3101	LK90A84			X				X		/							
B7.30	B-G-2		1-3101	LK90A85			X				X		/							
B7.30	B-G-2		1-3101	LK90A86			X				X		/							
B7.30	B-G-2		1-3101	LK90A87			X				X		/							
B7.30	B-G-2		1-3101	LK90A88			X				X		/							
B7.30	B-G-2		1-3101	LK90A89			X				X		/							
B7.30	B-G-2		1-3101	LK90A90			X				X		/							
B7.30	B-G-2		1-3101	LK90A91			X				X		/							
B7.30	B-G-2		1-3101	LK90A92			X				X		/							
B7.30	B-G-2		1-3101	LK90A93			X				X		/							
B7.30	B-G-2		1-3101	LK90A94			X				X		/							
B7.30	B-G-2		1-3101	LK90A95			X				X		/							
B7.30	B-G-2		1-3101	LK90A96			X				X		/							
B7.30	B-G-2		1-3101	LK90A97			X				X		/							
B7.30	B-G-2		1-3101	LK90A98			X				X		/							
B7.30	B-G-2		1-3101	LK90A99			X				X		/							
B7.30	B-G-2		1-3101	LK90B01			X				X									
B7.30	B-G-2		1-3101	LK90B02			X				X		/							
B7.30	B-G-2		1-3101	LK90B03			X				X		/							
B7.30	B-G-2		1-3101	LK90B04			X				X									
B7.30	B-G-2		1-3101	LK90B05			X				X		/							
B7.30	B-G-2		1-3101	LK90B06			X				X		/							
B7.30	B-G-2		1-3101	LK90B07			X				X		/							
B7.30	B-G-2		1-3101	LK90B08			X				X		/							
B7.30	B-G-2		1-3101	LK90B10			X				X									
B7.30	B-G-2		1-3101	LK90B11			X				X		/							
B7.30	B-G-2		1-3101	LK90B12			X				X									
B7.30	B-G-2		1-3101	LK90B14			X				X									
B7.30	B-G-2		1-3101	LK90B15			X				X		/							
B7.30	B-G-2		1-3101	LK90B16			X				X									
B7.30	B-G-2		1-3101	LK90B18			X				X									
B7.30	B-G-2		1-3101	LK90B19			X				X									

NSID COMPONENT SURVEILLANCE SCHEDULE

Effective Date 10/25/89 Process Date 03/09/90

COMPONENT: STM. GEN. BOLTS, STUDS, AND NUTS

83S	83S		INT		EXAMINATION METHODS			FIRST INTERVAL			SECOND INTERVAL			THIRD INTERVAL			FOURTH INTERVAL			
ITEM NUMBER	CATEGORY NUMBER	DESCRIPTION	SKETCH NUMBER	IDENT. NUMBER	VOL.	SUR.	VIS.	1ST PER	2ND PER	3RD PER	1ST PER	2ND PER	3RD PER	1ST PER	2ND PER	3RD PER	1ST PER	2ND PER	3RD PER	REMARKS
B7.30	B-G-2		1-3101	LN62A11			X				X	/								
B7.30	B-G-2		1-3101	LN62A12			X				X	/								
B7.30	B-G-2		1-3101	LN62A13			X				X	/								
B7.30	B-G-2		1-3101	LN62A14			X				X	/								
B7.30	B-G-2		1-3101	LN62A15			X				X	/								
B7.30	B-G-2		1-3101	LN62A16			X				X	/								
B7.30	B-G-2		1-3101	LN62A17			X				X	/								
B7.30	B-G-2		1-3101	LN62A18			X				X		/							
B7.30	B-G-2		1-3101	LN62A19			X				X		/							
B7.30	B-G-2		1-3101	LN62A20			X				X		/							
B7.30	B-G-2		1-3101	LN62A21			X				X		/							
B7.30	B-G-2		1-3101	LN62A22			X				X		/							
B7.30	B-G-2		1-3101	LN62A23			X				X		/							
B7.30	B-G-2		1-3101	LN62A24			X				X		/							
B7.30	B-G-2		1-3101	LN62A25			X				X	/								
B7.30	B-G-2		1-3101	LN62A26			X				X	/								
B7.30	B-G-2		1-3101	LN62A27			X				X	/								
B7.30	B-G-2		1-3101	LN62A28			X				X	/								
B7.30	B-G-2		1-3101	LN62A29			X				X	/								
B7.30	B-G-2		1-3101	LN62A30			X				X	/								
B7.30	B-G-2		1-3101	LN62A31			X				X	/								
B7.30	B-G-2		1-3101	LN62A32			X				X	/								
B7.30	B-G-2		1-3101	LN62A33			X				X	/								
B7.30	B-G-2		1-3101	LN62A34			X				X		/							
B7.30	B-G-2		1-3101	LN62A35			X				X	/								
B7.30	B-G-2		1-3101	LN62A36			X				X	/								
B7.30	B-G-2		1-3101	LN62A37			X				X	/								
B7.30	B-G-2		1-3101	LN62A38			X				X	/								
B7.30	B-G-2		1-3101	LN62A39			X				X	/								
B7.30	B-G-2		1-3101	LN62A40			X				X	/								
B7.30	B-G-2		1-3101	LN63A06			X				X	/								
B7.30	B-G-2		1-3101	LN63A07			X				X	/								
B7.30	B-G-2		1-3101	LN63A08			X				X	/								
B7.30	B-G-2		1-3101	LN63A09			X				X	/								
B7.30	B-G-2		1-3101	LN63A11			X				X	/								
B7.30	B-G-2		1-3101	LN63A12			X				X	/								
B7.30	B-G-2		1-3101	LN63A13			X				X	/								
B7.30	B-G-2		1-3101	LN63A14			X				X	/								
B7.30	B-G-2		1-3101	LN63A15			X				X	/								
B7.30	B-G-2		1-3101	LN63A16			X				X	/								
B7.30	B-G-2		1-3101	LN63A17			X				X	/								
B7.30	B-G-2		1-3101	LN63A18			X				X	/								
B7.30	B-G-2		1-3101	LN63A19			X				X	/								

NSID COMPONENT SURVEILLANCE SCHEDULE

Effective Date 10/25/89 Process Date 03/09/90

COMPONENT: STM. GEN. BOLTS, STUDS, AND NUTS

83S	83S		INT		EXAMINATION METHODS			FIRST INTERVAL			SECOND INTERVAL			THIRD INTERVAL			FOURTH INTERVAL			
ITEM NUMBER	CATEGORY NUMBER	DESCRIPTION	SKETCH NUMBER	IDENT. NUMBER	VOL.	SUR.	VIS.	1ST PER	2ND PER	3RD PER	1ST PER	2ND PER	3RD PER	1ST PER	2ND PER	3RD PER	1ST PER	2ND PER	3RD PER	REMARKS
B7.30	B-G-2		1-3101	LN63A20			X				X	/								
B7.30	B-G-2		1-3101	LN63A21			X				X	/								
B7.30	B-G-2		1-3101	LN63A22			X				X	/								
B7.30	B-G-2		1-3101	LN63A23			X				X		/							
B7.30	B-G-2		1-3101	LN63A24			X				X		/							
B7.30	B-G-2		1-3101	LN63A25			X				X		/							
B7.30	B-G-2		1-3101	LN63A26			X				X		/							
B7.30	B-G-2		1-3101	LN63A28			X				X		/							
B7.30	B-G-2		1-3101	LN63A29			X				X		/							
B7.30	B-G-2		1-3101	LN63A30			X				X		/							
B7.30	B-G-2		1-3101	LN63A31			X				X		/							
B7.30	B-G-2		1-3101	LN63A32			X				X		/							
B7.30	B-G-2		1-3101	LN63A33			X				X		/							
B7.30	B-G-2		1-3101	LN63A34			X				X		/							
B7.30	B-G-2		1-3101	LN63A35			X				X		/							
B7.30	B-G-2		1-3101	LN63A36			X				X		/							
B7.30	B-G-2		1-3101	LN63A37			X				X		/							
B7.30	B-G-2		1-3101	LN63A38			X				X		/							
B7.30	B-G-2		1-3101	LN63A39			X				X		/							
B7.30	B-G-2		1-3101	LN63A40			X				X		/							
B7.30	B-G-2		1-3101	LN63A41			X				X		/							
B7.30	B-G-2		1-3101	LN63A42			X				X		/							
B7.30	B-G-2		1-3101	LN63A43			X				X		/							
B7.30	B-G-2		1-3101	LN63A44			X				X		/							
B7.30	B-G-2		1-3101	LN63A45			X				X		/							
B7.30	B-G-2		1-3101	LN63A46			X				X		/							
B7.30	B-G-2		1-3101	LN63A47			X				X		/							
B7.30	B-G-2		1-3101	LN63A48			X				X		/							
B7.30	B-G-2		1-3101	LN63A49			X				X		/							
B7.30	B-G-2		1-3101	LN63A50			X				X		/							
B7.30	B-G-2		1-3101	LN63A51			X				X		/							
B7.30	B-G-2		1-3101	LN63A52			X				X		/							
B7.30	B-G-2		1-3101	LN63A53			X				X		/							
B7.30	B-G-2		1-3101	LN63A54			X				X		/							
B7.30	B-G-2		1-3101	LN63A55			X				X		/							
B7.30	B-G-2		1-3101	LN63A56			X				X		/							
B7.30	B-G-2		1-3101	LN63A57			X				X		/							
B7.30	B-G-2		1-3101	LN63A58			X				X		/							
B7.30	B-G-2		1-3101	LN63A59			X				X		/							
B7.30	B-G-2		1-3101	LN63A60			X				X		/							
B7.30	B-G-2		1-3101	LN63A61			X				X		/							
B7.30	B-G-2		1-3101	LN63A62			X				X		/							
B7.30	B-G-2		1-3101	LN63A63			X				X									

NSID COMPONENT SURVEILLANCE SCHEDULE

Effective Date 10/25/89 Process Date 03/09/90

COMPONENT: STM. GEN. BOLTS, STUDS, AND NUTS

83S	83S		INT		EXAMINATION METHODS			FIRST INTERVAL			SECOND INTERVAL			THIRD INTERVAL			FOURTH INTERVAL			
ITEM NUMBER	CATEGORY NUMBER	DESCRIPTION	SKETCH NUMBER	IDENT. NUMBER	VOL.	SUR.	VIS.	1ST PER	2ND PER	3RD PER	1ST PER	2ND PER	3RD PER	1ST PER	2ND PER	3RD PER	1ST PER	2ND PER	3RD PER	REMARKS
B7.30	B-G-2		1-3101	LN63A64			X				X		/							
B7.30	B-G-2		1-3101	LN63A65			X				X									
B7.30	B-G-2		1-3101	LN63A66			X				X									
B7.30	B-G-2		1-3101	LN63A67			X				X									
B7.30	B-G-2		1-3101	LN63A68			X				X									
B7.30	B-G-2		1-3101	LN63A69			X				X									
B7.30	B-G-2		1-3101	LN63A70			X				X									
B7.30	B-G-2		1-3101	LN63A71			X				X									
B7.30	B-G-2		1-3101	LN63A72			X				X									
B7.30	B-G-2		1-3101	LN63A73			X				X									
B7.30	B-G-2		1-3101	LN63A74			X				X									
B7.30	B-G-2		1-3101	LN63A75			X				X									
B7.30	B-G-2		1-3101	LN63A76			X				X									
B7.30	B-G-2		1-3101	LN63A77			X				X									
B7.30	B-G-2		1-3101	LN63A79			X				X									
B7.30	B-G-2		1-3101	LN63A80			X				X									
B7.30	B-G-2		1-3101	LN63A81			X				X									
B7.30	B-G-2		1-3101	LN63A83			X				X									
B7.30	B-G-2		1-3101	LN63A84			X				X									
B7.30	B-G-2		1-3101	LN63A85			X				X									
B7.30	B-G-2		1-3101	LN63A86			X				X									
B7.30	B-G-2		1-3101	LN63A88			X				X									
B7.30	B-G-2		1-3101	LN63A89			X				X									
B7.30	B-G-2		1-3101	LN63A90			X				X									
B7.30	B-G-2		1-3101	LN63A91			X				X									
B7.30	B-G-2		1-3101	LN63A93			X				X									
B7.30	B-G-2		1-3101	LN63A94			X				X									
B7.30	B-G-2		1-3101	LN63A95			X				X									
B7.30	B-G-2		1-3101	LN63A96			X				X									
B7.30	B-G-2		1-3101	LN63A97			X				X									
B7.30	B-G-2		1-3101	LN63A98			X				X									
B7.30	B-G-2		1-3101	LN63A99			X				X									
B7.30	B-G-2		1-3101	LN64A76			X				X	/								
B7.30	B-G-2		1-3101	LN64A77			X				X	/								
B7.30	B-G-2		1-3101	LN64A84			X				X	/								
B7.30	B-G-2		1-3101	LN64A87			X				X	/								
B7.30	B-G-2		1-3101	LN64A92			X				X	/								
B7.30	B-G-2		1-3101	LN64A94			X				X	/								
B7.30	B-G-2		1-3101	LN64A97			X				X	/								
B7.30	B-G-2		1-3101	LN64A99			X				X	/								
B7.30	B-G-2		1-3101	LN71A02			X				X	/								
B7.30	B-G-2		1-3101	LN71A06			X				X	/								
B7.30	B-G-2		1-3101	LN71A09			X				X	/								

NSID COMPONENT SURVEILLANCE SCHEDULE

Effective Date 10/25/89 Process Date 03/09/90

COMPONENT: STM. GEN. BOLTS, STUDS, AND NUTS

83S	83S		INT		EXAMINATION METHODS			FIRST INTERVAL			SECOND INTERVAL			THIRD INTERVAL			FOURTH INTERVAL			
ITEM NUMBER	CATEGORY NUMBER	DESCRIPTION	SKETCH NUMBER	IDENT. NUMBER	VOL.	SUR.	VIS.	1ST PER	2ND PER	3RD PER	1ST PER	2ND PER	3RD PER	1ST PER	2ND PER	3RD PER	1ST PER	2ND PER	3RD PER	REMARKS
B7.30	B-G-2		1-3101	LN71A14			X				X	/								
B7.30	B-G-2		1-3101	LN71A15			X				X	/								
B7.30	B-G-2		1-3101	LN71A18			X				X	/								
B7.30	B-G-2		1-3101	LN71A19			X				X	/								
B7.30	B-G-2		1-3101	LN71A20			X				X	/								
B7.30	B-G-2		1-3101	LN71A26			X				X	/								
B7.30	B-G-2		1-3101	LN71A27			X				X	/								
B7.30	B-G-2		1-3101	LN71A28			X				X	/								
B7.30	B-G-2		1-3101	LN71A29			X				X	/								
B7.30	B-G-2		1-3101	LN71A36			X				X	/								
B7.30	B-G-2		1-3101	LN71A37			X				X	/								
B7.30	B-G-2		1-3101	LN71A39			X				X	/								
B7.30	B-G-2		1-3101	LN71A42			X				X	/								
B7.30	B-G-2		1-3101	LN71A43			X				X	/								
B7.30	B-G-2		1-3101	LN71A44			X				X	/								
B7.30	B-G-2		1-3101	LN71A45			X				X	/								
B7.30	B-G-2		1-3101	LN71A46			X				X	/								
B7.30	B-G-2		1-3101	LN71A47			X				X	/								
B7.30	B-G-2		1-3101	LN71A48			X				X	/								
B7.30	B-G-2		1-3101	LN71A49			X				X	/								
B7.30	B-G-2		1-3101	LN71A50			X				X	/								
B7.30	B-G-2		1-3101	LN71A52			X				X	/								
B7.30	B-G-2		1-3101	LN71A53			X				X	/								
B7.30	B-G-2		1-3101	LN71A56			X				X	/								
B7.30	B-G-2		1-3101	LN71A57			X				X	/								
B7.30	B-G-2		1-3101	LN71A58			X				X	/								
B7.30	B-G-2		1-3101	LN71A61			X				X	/								
B7.30	B-G-2		1-3101	LN71A63			X				X	/								
B7.30	B-G-2		1-3101	LN71A64			X				X	/								
B7.30	B-G-2		1-3101	LN71A65			X				X	/								
B7.30	B-G-2		1-3101	LN71A66			X				X	/								
B7.30	B-G-2		1-3101	LN71A67			X				X	/								
B7.30	B-G-2		1-3101	LN71A73			X				X									
B7.30	B-G-2		1-3101	LN71A74			X				X									
B7.30	B-G-2		1-3101	LN71A75			X				X									
B7.30	B-G-2		1-3101	LN71A76			X				X									
B7.30	B-G-2		1-3101	LN71A77			X				X									
B7.30	B-G-2		1-3101	LN71A78			X				X									
B7.30	B-G-2		1-3101	LN71A79			X				X									
B7.30	B-G-2		1-3101	LN71A80			X				X									
B7.30	B-G-2		1-3101	LN71A81			X				X									
B7.30	B-G-2		1-3101	LN71A82			X				X									
B7.30	B-G-2		1-3101	LN71A83			X				X									

NSID COMPONENT SURVEILLANCE SCHEDULE

Effective Date 10/25/89 Process Date 03/09/90

COMPONENT: STM. GEN. BOLTS, STUDS, AND NUTS

83S	83S		INT		EXAMINATION METHODS			FIRST INTERVAL			SECOND INTERVAL			THIRD INTERVAL			FOURTH INTERVAL			
ITEM NUMBER	CATEGORY NUMBER	DESCRIPTION	SKETCH NUMBER	IDENT. NUMBER	VOL.	SUR.	VIS.	1ST PER	2ND PER	3RD PER	1ST PER	2ND PER	3RD PER	1ST PER	2ND PER	3RD PER	1ST PER	2ND PER	3RD PER	REMARKS
B7.30	B-G-2		1-3101	LN71A84			X				X									
B7.30	B-G-2		1-3101	LN71A85			X				X									
B7.30	B-G-2		1-3101	LN71A86			X				X									
B7.30	B-G-2		1-3101	LN71A87			X				X									
B7.30	B-G-2		1-3101	LN71A88			X				X									
B7.30	B-G-2		1-3101	LN71A89			X				X									
B7.30	B-G-2		1-3101	LN71A90			X				X									
B7.30	B-G-2		1-3101	LN71A91			X				X									
B7.30	B-G-2		1-3101	LN71A92			X				X									
B7.30	B-G-2		1-3101	LN71A93			X				X									
B7.30	B-G-2		1-3101	LN71A94			X				X									
B7.30	B-G-2		1-3101	LN71A95			X				X									
B7.30	B-G-2		1-3101	LN71A96			X				X									
B7.30	B-G-2		1-3101	LN71A97			X				X									
B7.30	B-G-2		1-3101	LN71A98			X				X									
B7.30	B-G-2		1-3101	LN71A99			X				X									
B7.30	B-G-2		1-3101	LN71B01			X				X		/							
B7.30	B-G-2		1-3101	LN71B02			X				X		/							
B7.30	B-G-2		1-3101	LN71B03			X				X		/							
B7.30	B-G-2		1-3101	LN71B04			X				X		/							
B7.30	B-G-2		1-3101	LN71B05			X				X		/							
B7.30	B-G-2		1-3101	LN71B06			X				X		/							
B7.30	B-G-2		1-3101	LN71B08			X				X		/							
B7.30	B-G-2		1-3101	LN71B09			X				X		/							
B7.30	B-G-2		1-3101	LN71B10			X				X	/								
B7.30	B-G-2		1-3101	LN71B11			X				X	/								
B7.30	B-G-2		1-3101	LN71B12			X				X	/								
B7.30	B-G-2		1-3101	LN71B13			X				X	/								
B7.30	B-G-2		1-3101	LN71B15			X				X	/								
B7.30	B-G-2		1-3101	LN71B16			X				X	/								
B7.30	B-G-2		1-3101	LN71B17			X				X	/								
B7.30	B-G-2		1-3101	LN71B19			X				X	/								
B7.30	B-G-2		1-3101	LN71B23			X				X	/								
B7.30	B-G-2		1-3101	LN71B27			X				X	/								
B7.30	B-G-2		1-3101	LN71B31			X				X	/								
B7.30	B-G-2		1-3101	LN71B32			X				X	/								
B7.30	B-G-2		1-3101	LN71B35			X				X	/								
B7.30	B-G-2		1-3101	LN71B36			X				X	/								
B7.30	B-G-2		1-3101	LN71B37			X				X	/								
B7.30	B-G-2		1-3101	LN71B38			X				X	/								
B7.30	B-G-2		1-3101	LN71B44			X				X	/								
B7.30	B-G-2		1-3101	LN71B45			X				X	/								
B7.30	B-G-2		1-3101	LN71B48			X				X	/								

NSID COMPONENT SURVEILLANCE SCHEDULE

Effective Date 10/25/89 Process Date 03/09/90

COMPONENT: STM. GEN. BOLTS, STUDS, AND NUTS

83S	83S		INT		EXAMINATION METHODS			FIRST INTERVAL			SECOND INTERVAL			THIRD INTERVAL			FOURTH INTERVAL			
ITEM NUMBER	CATEGORY NUMBER	DESCRIPTION	SKETCH NUMBER	IDENT. NUMBER	VOL.	SUR.	VIS.	1ST PER	2ND PER	3RD PER	1ST PER	2ND PER	3RD PER	1ST PER	2ND PER	3RD PER	1ST PER	2ND PER	3RD PER	REMARKS
B7.30	B-G-2		1-3101	LN71B50			X				X	/								
B7.30	B-G-2		1-3101	LN71B52			X				X	/								
B7.30	B-G-2		1-3101	LN71B55			X				X	/								
B7.30	B-G-2		1-3101	LN71B56			X				X	/								
B7.30	B-G-2		1-3101	LN71B58			X				X	/								
B7.30	B-G-2		1-3101	LN71B59			X				X	/								
B7.30	B-G-2		1-3101	LN72A01			X				X									
B7.30	B-G-2		1-3101	LN72A02			X				X									
B7.30	B-G-2		1-3101	LN72A03			X				X									
B7.30	B-G-2		1-3101	LN72A04			X				X									
B7.30	B-G-2		1-3101	LN72A05			X				X									
B7.30	B-G-2		1-3101	LN72A06			X				X									
B7.30	B-G-2		1-3101	LN72A07			X				X									
B7.30	B-G-2		1-3101	LN72A09			X				X									
B7.30	B-G-2		1-3101	LN72A10			X				X									
B7.30	B-G-2		1-3101	LN72A12			X				X									
B7.30	B-G-2		1-3101	LN72A13			X				X									
B7.30	B-G-2		1-3101	LN72A15			X				X									
B7.30	B-G-2		1-3101	LN72A17			X				X									
B7.30	B-G-2		1-3101	LN72A18			X				X									
B7.30	B-G-2		1-3101	LN72A19			X				X									
B7.30	B-G-2		1-3101	LN72A20			X				X									
B7.30	B-G-2		1-3101	LN72A21			X				X									
B7.30	B-G-2		1-3101	LN72A23			X				X									
B7.30	B-G-2		1-3101	LN72A24			X				X									
B7.30	B-G-2		1-3101	LN72A27			X				X									
B7.30	B-G-2		1-3101	LN72A28			X				X									
B7.30	B-G-2		1-3101	LN72A29			X				X									
B7.30	B-G-2		1-3101	LN72A30			X				X									
B7.30	B-G-2		1-3101	LN72A31			X				X									
B7.30	B-G-2		1-3101	LN72A32			X				X									
B7.30	B-G-2		1-3101	LN72A34			X				X									
B7.30	B-G-2		1-3101	LN72A35			X				X									
B7.30	B-G-2		1-3101	LN72A36			X				X									
B7.30	B-G-2		1-3101	LN72A37			X				X		/							
B7.30	B-G-2		1-3101	LN72A38			X				X		/							
B7.30	B-G-2		1-3101	LN72A39			X				X		/							
B7.30	B-G-2		1-3101	LN72A40			X				X		/							
B7.30	B-G-2		1-3101	LN72A41			X				X		/							
B7.30	B-G-2		1-3101	LN72A42			X				X		/							
B7.30	B-G-2		1-3101	LN72A43			X				X		/							
B7.30	B-G-2		1-3101	LN72A44			X				X		/							
B7.30	B-G-2		1-3101	LN72A45			X				X		/							

NSID COMPONENT SURVEILLANCE SCHEDULE

Effective Date 10/25/89 Process Date 03/09/90

COMPONENT: STM. GEN. BOLTS, STUDS, AND NUTS

83S	83S		INT		EXAMINATION METHODS			FIRST INTERVAL			SECOND INTERVAL			THIRD INTERVAL			FOURTH INTERVAL			
ITEM NUMBER	CATEGORY NUMBER	DESCRIPTION	SKETCH NUMBER	IDENT. NUMBER	VOL.	SUR.	VIS.	1ST PER	2ND PER	3RD PER	1ST PER	2ND PER	3RD PER	1ST PER	2ND PER	3RD PER	1ST PER	2ND PER	3RD PER	REMARKS
B7.30	B-G-2		1-3101	LN72A46			X				X		/							
B7.30	B-G-2		1-3101	LN72A47			X				X		/							
B7.30	B-G-2		1-3101	LN72A48			X				X		/							
B7.30	B-G-2		1-3101	LN72A49			X				X		/							
B7.30	B-G-2		1-3101	LN72A50			X				X		/							
B7.30	B-G-2		1-3101	LN72A51			X				X		/							
B7.30	B-G-2		1-3101	LN72A52			X				X									
B7.30	B-G-2		1-3101	LN72A53			X				X		/							
B7.30	B-G-2		1-3101	LN72A54			X				X		/							
B7.30	B-G-2		1-3101	LN72A55			X				X		/							
B7.30	B-G-2		1-3101	LN72A56			X				X		/							
B7.30	B-G-2		1-3101	LN72A57			X				X		/							
B7.30	B-G-2		1-3101	LN72A58			X				X		/							
B7.30	B-G-2		1-3101	LN72A59			X				X		/							
B7.30	B-G-2		1-3101	LN72A60			X				X		/							
B7.30	B-G-2		1-3101	LN72A61			X				X									
B7.30	B-G-2		1-3101	LN72A62			X				X		/							
B7.30	B-G-2		1-3101	LN72A63			X				X		/							
B7.30	B-G-2		1-3101	LN72A64			X				X									
B7.30	B-G-2		1-3101	LN72A65			X				X		/							
B7.30	B-G-2		1-3101	LN72A66			X				X		/							
B7.30	B-G-2		1-3101	LN72A67			X				X		/							
B7.30	B-G-2		1-3101	LN72A68			X				X		/							
B7.30	B-G-2		1-3101	LN72A69			X				X									
B7.30	B-G-2		1-3101	LN72A70			X				X		/							
B7.30	B-G-2		1-3101	LN72A71			X				X		/							
B7.30	B-G-2		1-3101	LN72A72			X				X		/							
B7.30	B-G-2		1-3101	LN72A73			X				X		/							
B7.30	B-G-2		1-3101	LN72A74			X				X	/								
B7.30	B-G-2		1-3101	LN72A75			X				X		/							
B7.30	B-G-2		1-3101	LN72A76			X				X		/							
B7.30	B-G-2		1-3101	LN72A77			X				X		/							
B7.30	B-G-2		1-3101	LN72A78			X				X		/							
B7.30	B-G-2		1-3101	LN72A79			X				X		/							
B7.30	B-G-2		1-3101	LN72A80			X				X	/								
B7.30	B-G-2		1-3101	LN72A81			X				X	/								
B7.30	B-G-2		1-3101	LN72A82			X				X	/								
B7.30	B-G-2		1-3101	LN72A83			X				X	/								
B7.30	B-G-2		1-3101	LN72A84			X				X	/								
B7.30	B-G-2		1-3101	LN72A85			X				X	/								
B7.30	B-G-2		1-3101	LN72A86			X				X	/								
B7.30	B-G-2		1-3101	LN72A87			X				X		/							
B7.30	B-G-2		1-3101	LN72A88			X				X		/							

NSID COMPONENT SURVEILLANCE SCHEDULE

Effective Date 10/25/89 Process Date 03/09/90

COMPONENT: STM. GEN. BOLTS, STUDS, AND NUTS

83S	83S		INT		EXAMINATION METHODS			FIRST INTERVAL			SECOND INTERVAL			THIRD INTERVAL			FOURTH INTERVAL			
ITEM NUMBER	CATEGORY NUMBER	DESCRIPTION	SKETCH NUMBER	IDENT. NUMBER	VOL.	SUR.	VIS.	1ST PER	2ND PER	3RD PER	1ST PER	2ND PER	3RD PER	1ST PER	2ND PER	3RD PER	1ST PER	2ND PER	3RD PER	REMARKS
B7.30	B-G-2		1-3101	LN72A89			X				X	/								
B7.30	B-G-2		1-3101	LN72A90			X				X	/								
B7.30	B-G-2		1-3101	LN72A91			X				X	/								
B7.30	B-G-2		1-3101	LN72A92			X				X		/							
B7.30	B-G-2		1-3101	LN72A93			X				X		/							
B7.30	B-G-2		1-3101	LN72A94			X				X	/								
B7.30	B-G-2		1-3101	LN72A95			X				X	/								
B7.30	B-G-2		1-3101	LN72A96			X				X	/								
B7.30	B-G-2		1-3101	LN72A97			X				X	/								
B7.30	B-G-2		1-3101	LN72A98			X				X		/							
B7.30	B-G-2		1-3101	LN72A99			X				X		/							
B7.30	B-G-2		1-3101	LN72B01			X				X	/								
B7.30	B-G-2		1-3101	LN72B02			X				X	/								
B7.30	B-G-2		1-3101	LN72B03			X				X	/								
B7.30	B-G-2		1-3101	LN72B04			X				X	/								
B7.30	B-G-2		1-3101	LN72B05			X				X	/								
B7.30	B-G-2		1-3101	LN72B06			X				X	/								
B7.30	B-G-2		1-3101	LN72B07			X				X	/								
B7.30	B-G-2		1-3101	LN72B08			X				X	/								
B7.30	B-G-2		1-3101	LN72B09			X				X	/								
B7.30	B-G-2		1-3101	LN72B10			X				X		/							
B7.30	B-G-2		1-3101	LN72B13			X				X		/							
B7.30	B-G-2		1-3101	LN72B14			X				X		/							
B7.30	B-G-2		1-3101	LN72B15			X				X		/							
B7.30	B-G-2		1-3101	LN72B17			X				X		/							
B7.30	B-G-2		1-3101	LN72B18			X				X		/							
B7.30	B-G-2		1-3101	LN72B19			X				X		/							
B7.30	B-G-2		1-3101	LN72B20			X				X		/							
B7.30	B-G-2		1-3101	LN72B22			X				X		/							
B7.30	B-G-2		1-3101	LN72B23			X				X		/							
B7.30	B-G-2		1-3101	LN72B24			X				X		/							
B7.30	B-G-2		1-3101	LN72B31			X				X		/							
B7.30	B-G-2		1-3101	LN72B32			X				X		/							
B7.30	B-G-2		1-3101	LN72B34			X				X		/							
B7.30	B-G-2		1-3101	LN72B37			X				X		/							
B7.30	B-G-2		1-3101	LN72B41			X				X		/							
B7.30	B-G-2		1-3101	LN72B42			X				X		/							
B7.30	B-G-2		1-3101	LN72B43			X				X		/							
B7.30	B-G-2		1-3101	LN72B44			X				X		/							
B7.30	B-G-2		1-3101	LN72B45			X				X		/							
B7.30	B-G-2		1-3101	LK90A31			X				X									
		TOTAL ID's for B7.30		512 *							512	192	192							

NSID COMPONENT SURVEILLANCE SCHEDULE

Effective Date 10/25/89 Process Date 03/09/90

COMPONENT: PIPING BOLTS, STUDS, AND NUTS

83S	83S		INT		EXAMINATION METHODS			FIRST INTERVAL			SECOND INTERVAL			THIRD INTERVAL			FOURTH INTERVAL			
ITEM NUMBER	CATEGORY NUMBER	DESCRIPTION	SKETCH NUMBER	IDENT. NUMBER	VOL.	SUR.	VIS.	1ST PER	2ND PER	3RD PER	1ST PER	2ND PER	3RD PER	1ST PER	2ND PER	3RD PER	1ST PER	2ND PER	3RD PER	REMARKS
B7.50	B-G-2		1-4108	FLANGE A			X				X									VT-1
B7.50	B-G-2		1-4208	FLANGE A			X					/								
B7.50	B-G-2		1-4307	FLANGE A			X						/							
B7.50	B-G-2		1-4407	FLANGE A			X						/							
B7.50	B-G-2		1-4501	FLANGE A			X				X									
B7.50	B-G-2		1-4502	FLANGE A			X				X		/							
B7.50	B-G-2		1-4503	FLANGE A			X					/								
		TOTAL ID's for B7.50		7 *							3	2	3							

NSID COMPONENT SURVEILLANCE SCHEDULE

Effective Date 10/25/89 Process Date 03/09/90

COMPONENT: PUMP BOLTS, STUDS, AND NUTS SEAL HOUSE

83S	83S		INT		EXAMINATION METHODS			FIRST INTERVAL			SECOND INTERVAL			THIRD INTERVAL			FOURTH INTERVAL			
ITEM NUMBER	CATEGORY NUMBER	DESCRIPTION	SKETCH NUMBER	IDENT. NUMBER	VOL.	SUR.	VIS.	1ST PER	2ND PER	3RD PER	1ST PER	2ND PER	3RD PER	1ST PER	2ND PER	3RD PER	1ST PER	2ND PER	3RD PER	REMARKS
B7.60	B-G-2		1-5100	31-B01SH			X				X									VT-1
B7.60	B-G-2		1-5100	31-B02SH			X				X									
B7.60	B-G-2		1-5100	31-B03SH			X				X									
B7.60	B-G-2		1-5100	31-B04SH			X				X									
B7.60	B-G-2		1-5100	31-B05SH			X				X									
B7.60	B-G-2		1-5100	31-B06SH			X				X									
B7.60	B-G-2		1-5100	31-B07SH			X				X									
B7.60	B-G-2		1-5100	31-B08SH			X				X									
B7.60	B-G-2		1-5100	31-B09SH			X				X									
B7.60	B-G-2		1-5100	31-B10SH			X				X									
B7.60	B-G-2		1-5100	31-B11SH			X				X									
B7.60	B-G-2		1-5100	31-B12SH			X				X									
B7.60	B-G-2		1-5100	31-B13SH			X				X									
B7.60	B-G-2		1-5100	31-B14SH			X				X									
B7.60	B-G-2		1-5100	31-B15SH			X				X									
B7.60	B-G-2		1-5100	31-B16SH			X				X									
B7.60	B-G-2		1-5100	31-B17SH			X				X									
B7.60	B-G-2		1-5100	31-B18SH			X				X									
B7.60	B-G-2		1-5100	32-B01SH			X					/								
B7.60	B-G-2		1-5100	32-B02SH			X					/								
B7.60	B-G-2		1-5100	32-B03SH			X					/								
B7.60	B-G-2		1-5100	32-B04SH			X					/								
B7.60	B-G-2		1-5100	32-B05SH			X					/								
B7.60	B-G-2		1-5100	32-B06SH			X					/								
B7.60	B-G-2		1-5100	32-B07SH			X					/								
B7.60	B-G-2		1-5100	32-B08SH			X					/								
B7.60	B-G-2		1-5100	32-B09SH			X					/								
B7.60	B-G-2		1-5100	32-B10SH			X					/								
B7.60	B-G-2		1-5100	32-B11SH			X					/								
B7.60	B-G-2		1-5100	32-B12SH			X					/								
B7.60	B-G-2		1-5100	32-B13SH			X					/								
B7.60	B-G-2		1-5100	32-B14SH			X					/								
B7.60	B-G-2		1-5100	32-B15SH			X					/								
B7.60	B-G-2		1-5100	32-B16SH			X					/								
B7.60	B-G-2		1-5100	32-B17SH			X					/								
B7.60	B-G-2		1-5100	32-B18SH			X					/								
B7.60	B-G-2		1-5100	33-B01SH			X						/							
B7.60	B-G-2		1-5100	33-B02SH			X						/							
B7.60	B-G-2		1-5100	33-B03SH			X						/							
B7.60	B-G-2		1-5100	33-B04SH			X						/							
B7.60	B-G-2		1-5100	33-B05SH			X						/							
B7.60	B-G-2		1-5100	33-B06SH			X						/							
B7.60	B-G-2		1-5100	33-B07SH			X						/							

NSID COMPONENT SURVEILLANCE SCHEDULE

Effective Date 10/25/89 Process Date 03/09/90

COMPONENT: PUMP BOLTS, STUDS, AND NUTS SEAL HOUSE

83S	83S		INT		EXAMINATION METHODS			FIRST INTERVAL			SECOND INTERVAL			THIRD INTERVAL			FOURTH INTERVAL			
ITEM NUMBER	CATEGORY NUMBER	DESCRIPTION	SKETCH NUMBER	IDENT. NUMBER	VOL.	SUR.	VIS.	1ST PER	2ND PER	3RD PER	1ST PER	2ND PER	3RD PER	1ST PER	2ND PER	3RD PER	1ST PER	2ND PER	3RD PER	REMARKS
B7.60	B-G-2		1-5100	33-B08SH			X						/							
B7.60	B-G-2		1-5100	33-B09SH			X						/							
B7.60	B-G-2		1-5100	33-B10SH			X						/							
B7.60	B-G-2		1-5100	33-B11SH			X						/							
B7.60	B-G-2		1-5100	33-B12SH			X						/							
B7.60	B-G-2		1-5100	33-B13SH			X						/							
B7.60	B-G-2		1-5100	33-B14SH			X						/							
B7.60	B-G-2		1-5100	33-B15SH			X						/							
B7.60	B-G-2		1-5100	33-B16SH			X						/							
B7.60	B-G-2		1-5100	33-B17SH			X						/							
B7.60	B-G-2		1-5100	33-B18SH			X						/							
B7.60	B-G-2		1-5100	34-B01SH			X						/							
B7.60	B-G-2		1-5100	34-B02SH			X						/							
B7.60	B-G-2		1-5100	34-B03SH			X						/							
B7.60	B-G-2		1-5100	34-B04SH			X						/							
B7.60	B-G-2		1-5100	34-B05SH			X						/							
B7.60	B-G-2		1-5100	34-B06SH			X						/							
B7.60	B-G-2		1-5100	34-B07SH			X						/							
B7.60	B-G-2		1-5100	34-B08SH			X						/							
B7.60	B-G-2		1-5100	34-B09SH			X						/							
B7.60	B-G-2		1-5100	34-B10SH			X						/							
B7.60	B-G-2		1-5100	34-B11SH			X						/							
B7.60	B-G-2		1-5100	34-B12SH			X						/							
B7.60	B-G-2		1-5100	34-B13SH			X						/							
B7.60	B-G-2		1-5100	34-B14SH			X						/							
B7.60	B-G-2		1-5100	34-B15SH			X						/							
B7.60	B-G-2		1-5100	34-B16SH			X						/							
B7.60	B-G-2		1-5100	34-B17SH			X						/							
B7.60	B-G-2		1-5100	34-B18SH			X						/							
		TOTAL ID's for B7.60		72 *							18	18	36							

NSID COMPONENT SURVEILLANCE SCHEDULE

Effective Date 10/25/89 Process Date 03/09/90

COMPONENT: VALVE BOLTS, STUDS, AND NUTS

83S	83S		INT		EXAMINATION METHODS			FIRST INTERVAL			SECOND INTERVAL			THIRD INTERVAL			FOURTH INTERVAL			
ITEM NUMBER	CATEGORY NUMBER	DESCRIPTION	SKETCH NUMBER	IDENT. NUMBER	VOL.	SUR.	VIS.	1ST PER	2ND PER	3RD PER	1ST PER	2ND PER	3RD PER	1ST PER	2ND PER	3RD PER	1ST PER	2ND PER	3RD PER	REMARKS
B7.70	B-G-2		1-4101	838A			X				X									VT-1
B7.70	B-G-2		1-4101	895A			X				X									
B7.70	B-G-2		1-4101	897A			X				X									
B7.70	B-G-2		1-4103	342			X						/							
B7.70	B-G-2		1-4103	LCV459			X						/							
B7.70	B-G-2		1-4103	LCV460			X						/							
B7.70	B-G-2		1-4201	730			X				X									
B7.70	B-G-2		1-4201	731			X					/								
B7.70	B-G-2		1-4202	838B			X						/							
B7.70	B-G-2		1-4202	895B			X				X									
B7.70	B-G-2		1-4202	897B			X						/							
B7.70	B-G-2		1-4301	838C			X					/								
B7.70	B-G-2		1-4301	895C			X					/								
B7.70	B-G-2		1-4301	897C			X					/								
B7.70	B-G-2		1-4401	838D			X					/								
B7.70	B-G-2		1-4401	895D			X					/								
B7.70	B-G-2		1-4401	897D			X					/								
B7.70	B-G-2		1-4501	PCV464			X						/							
B7.70	B-G-2		1-4502	PCV466			X						/							
B7.70	B-G-2		1-4503	PCV468			X						/							
B7.70	B-G-2		1-4505	RC535			X				X									
B7.70	B-G-2		1-4505	RC536			X				X									
B7.70	B-G-2		1-4505	PCV456			X					/								
B7.70	B-G-2		1-4505	PCV455C			X				X									
B7.70	B-G-2		1-4506	PCV455A			X					/								
B7.70	B-G-2		1-4507	PCV455B			X					/								
B7.70	B-G-2		1-4600	210B			X						/							
B7.70	B-G-2		1-4600	210D			X						/							
B7.70	B-G-2		1-4601	210A			X						/							
B7.70	B-G-2		1-4601	210C			X						/							

NSID COMPONENT SURVEILLANCE SCHEDULE

Effective Date 10/25/89 Process Date 03/09/90

COMPONENT: VALVE BOLTS, STUDS, AND NUTS

83S	83S		INT		EXAMINATION METHODS			FIRST INTERVAL			SECOND INTERVAL			THIRD INTERVAL			FOURTH INTERVAL			
ITEM NUMBER	CATEGORY NUMBER	DESCRIPTION	SKETCH NUMBER	IDENT. NUMBER	VOL.	SUR.	VIS.	1ST PER	2ND PER	3RD PER	1ST PER	2ND PER	3RD PER	1ST PER	2ND PER	3RD PER	1ST PER	2ND PER	3RD PER	REMARKS
		TOTAL ID's for B7.70		30 *							8	10	12							

NSID COMPONENT SURVEILLANCE SCHEDULE

Effective Date 10/25/89 Process Date 03/09/90

COMPONENT: CRD HOUSINGS BOLTS, STUDS, AND NUTS

83S	83S		INT		EXAMINATION METHODS			FIRST INTERVAL			SECOND INTERVAL			THIRD INTERVAL			FOURTH INTERVAL			
ITEM NUMBER	CATEGORY NUMBER	DESCRIPTION	SKETCH NUMBER	IDENT. NUMBER	VOL.	SUR.	VIS.	1ST PER	2ND PER	3RD PER	1ST PER	2ND PER	3RD PER	1ST PER	2ND PER	3RD PER	1ST PER	2ND PER	3RD PER	REMARKS
B7.80	B-G-2		1-1300	CRD-74			X				X									VT-1
B7.80	B-G-2		1-1300	CRD-75			X					/								
B7.80	B-G-2		1-1300	CRD-76			X					/								
B7.80	B-G-2		1-1300	CRD-77			X						/							
B7.80	B-G-2		1-1300	CRD-78			X						/							
		TOTAL ID's for B7.80		5 *							1	2	2							

NSID COMPONENT SURVEILLANCE SCHEDULE

Effective Date 10/25/89 Process Date 03/09/90

COMPONENT: PRESSURIZER INTEGRALLY WELDED ATTACHMENTS

83S	83S		INT		EXAMINATION METHODS			FIRST INTERVAL			SECOND INTERVAL			THIRD INTERVAL			FOURTH INTERVAL			
ITEM NUMBER	CATEGORY NUMBER	DESCRIPTION	SKETCH NUMBER	IDENT. NUMBER	VOL.	SUR.	VIS.	1ST PER	2ND PER	3RD PER	1ST PER	2ND PER	3RD PER	1ST PER	2ND PER	3RD PER	1ST PER	2ND PER	3RD PER	REMARKS
B8.20	B-H		1-2100	18	X						X	/	/							REFERENCE TABLE 4.0
B8.20	B-H		1-2100	19	X						X	/	/							REFERENCE TABLE 4.0
		TOTAL ID's for B8.20		2 *							2	2	2							

NSID COMPONENT SURVEILLANCE SCHEDULE

Effective Date 10/25/89 Process Date 03/09/90

COMPONENT: PIPE CIRCUMFERENTIAL WELDS 4" NPS AND GREATER

83S	83S		INT		EXAMINATION METHODS			FIRST INTERVAL			SECOND INTERVAL			THIRD INTERVAL			FOURTH INTERVAL			
ITEM NUMBER	CATEGORY NUMBER	DESCRIPTION	SKETCH NUMBER	IDENT. NUMBER	VOL.	SUR.	VIS.	1ST PER	2ND PER	3RD PER	1ST PER	2ND PER	3RD PER	1ST PER	2ND PER	3RD PER	1ST PER	2ND PER	3RD PER	REMARKS
B9.11	B-J		1-4100	2	X						X									REFERENCE TABLE 4.0
				2		X														
B9.11	B-J		1-4100	3	X															
				3		X														
B9.11	B-J		1-4100	4	X															
				4		X														
B9.11	B-J		1-4100	7	X															
				7		X														
B9.11	B-J		1-4100	8	X															
				8		X														
B9.11	B-J		1-4100	9	X															
				9		X														
B9.11	B-J		1-4100	10	X															
				10		X														
B9.11	B-J		1-4100	11	X															
				11		X														
B9.11	B-J		1-4100	12	X						X									
				12		X					X									
B9.11	B-J		1-4100	13	X															
				13		X														
B9.11	B-J		1-4100	14	X															
				14		X														
B9.11	B-J		1-4100	15	X								/							REFERENCE TABLE 4.0
				15		X														
B9.11	B-J		1-4101	1	X															
				1		X														
B9.11	B-J		1-4101	2	X															
				2		X														
B9.11	B-J		1-4101	3	X						X									
				3		X					X									
B9.11	B-J		1-4101	4	X						X									
				4		X					X									
B9.11	B-J		1-4101	5	X						X									
				5		X					X									
B9.11	B-J		1-4101	6	X															
				6		X														
B9.11	B-J		1-4101	7	X															
				7		X														
B9.11	B-J		1-4101	8	X															
				8		X														
B9.11	B-J		1-4101	9	X															
				9		X														

NSID COMPONENT SURVEILLANCE SCHEDULE

Effective Date 10/25/89 Process Date 03/09/90

COMPONENT: PIPE CIRCUMFERENTIAL WELDS 4" NPS AND GREATER

83S	83S		INT		EXAMINATION METHODS			FIRST INTERVAL			SECOND INTERVAL			THIRD INTERVAL			FOURTH INTERVAL			
ITEM NUMBER	CATEGORY NUMBER	DESCRIPTION	SKETCH NUMBER	IDENT. NUMBER	VOL.	SUR.	VIS.	1ST PER	2ND PER	3RD PER	1ST PER	2ND PER	3RD PER	1ST PER	2ND PER	3RD PER	1ST PER	2ND PER	3RD PER	REMARKS
B9.11	B-J		1-4101	10	X															
				10		X														
B9.11	B-J		1-4101	11	X															
				11		X														
B9.11	B-J		1-4101	12	X															
				12		X														
B9.11	B-J		1-4101	13	X															
				13		X														
B9.11	B-J		1-4101	14	X															
				14		X														
B9.11	B-J		1-4101	15	X															
				15		X														
B9.11	B-J		1-4102	54	X															
				54		X														
B9.11	B-J		1-4200	2	X						X									
				2		X														
B9.11	B-J		1-4200	3	X															
				3		X														
B9.11	B-J		1-4200	4	X						X									
				4		X					X									
B9.11	B-J		1-4200	7	X								/							
				7		X							/							
B9.11	B-J		1-4200	8	X								/							
				8		X							/							
B9.11	B-J		1-4200	9	X															
				9		X														
B9.11	B-J		1-4200	10	X															
				10		X														
B9.11	B-J		1-4200	11	X															
				11		X														
B9.11	B-J		1-4200	12	X															
				12		X														
B9.11	B-J		1-4200	13	X						X									
				13		X					X									
B9.11	B-J		1-4200	14	X															
				14		X														
B9.11	B-J		1-4200	15	X								/							REFERENCE TABLE 4.0
				15		X														
B9.11	B-J		1-4201	2	X															
				2		X														

NSID COMPONENT SURVEILLANCE SCHEDULE

Effective Date 10/25/89 Process Date 03/09/90

COMPONENT: PIPE CIRCUMFERENTIAL WELDS 4" NPS AND GREATER

83S	83S		INT		EXAMINATION METHODS			FIRST INTERVAL			SECOND INTERVAL			THIRD INTERVAL			FOURTH INTERVAL			
ITEM NUMBER	CATEGORY NUMBER	DESCRIPTION	SKETCH NUMBER	IDENT. NUMBER	VOL.	SUR.	VIS.	1ST PER	2ND PER	3RD PER	1ST PER	2ND PER	3RD PER	1ST PER	2ND PER	3RD PER	1ST PER	2ND PER	3RD PER	REMARKS
B9.11	B-J		1-4201	3	X															
				3		X														
B9.11	B-J		1-4201	4	X															
				4		X														
B9.11	B-J		1-4201	5	X															
				5		X														
B9.11	B-J		1-4201	6	X															
				6		X														
B9.11	B-J		1-4201	7	X															
				7		X														
B9.11	B-J		1-4201	8	X															
				8		X														
B9.11	B-J		1-4201	9	X															
				9		X														
B9.11	B-J		1-4201	10	X															
				10		X														
B9.11	B-J		1-4201	11	X															
				11		X														
B9.11	B-J		1-4201	12	X															
				12		X														
B9.11	B-J		1-4201	13	X															
				13		X														
B9.11	B-J		1-4201	14	X															
				14		X														
B9.11	B-J		1-4201	15	X															
				15		X														
B9.11	B-J		1-4201	16	X															
				16		X														
B9.11	B-J		1-4201	17	X															
				17		X														
B9.11	B-J		1-4201	18	X						X									
				18		X					X									
B9.11	B-J		1-4201	19	X						X									
				19		X					X									
B9.11	B-J		1-4201	20	X						X									
				20		X					X									
B9.11	B-J		1-4202	1	X								/							
				1		X							/							
B9.11	B-J		1-4202	2	X								/							
				2		X							/							
B9.11	B-J		1-4202	3	X								/							
				3		X							/							

NSID COMPONENT SURVEILLANCE SCHEDULE

Effective Date 10/25/89 Process Date 03/09/90

COMPONENT: PIPE CIRCUMFERENTIAL WELDS 4" NPS AND GREATER

83S	83S		INT		EXAMINATION METHODS			FIRST INTERVAL			SECOND INTERVAL			THIRD INTERVAL			FOURTH INTERVAL			
ITEM NUMBER	CATEGORY NUMBER	DESCRIPTION	SKETCH NUMBER	IDENT. NUMBER	VOL.	SUR.	VIS.	1ST PER	2ND PER	3RD PER	1ST PER	2ND PER	3RD PER	1ST PER	2ND PER	3RD PER	1ST PER	2ND PER	3RD PER	REMARKS
B9.11	B-J		1-4202	4	X						X									
				4		X					X									
B9.11	B-J		1-4202	5	X															
				5		X														
B9.11	B-J		1-4202	6	X						X									
				6		X					X									
B9.11	B-J		1-4202	7	X															
				7		X														
B9.11	B-J		1-4202	8	X															
				8		X														
B9.11	B-J		1-4202	9	X								/							
				9		X							/							
B9.11	B-J		1-4202	10	X								/							
				10		X							/							
B9.11	B-J		1-4202	11	X															
				11		X														
B9.11	B-J		1-4202	12	X															
				12		X														
B9.11	B-J		1-4203	2	X															
				2		X														
B9.11	B-J		1-4300	2	X						X									
				2		X														
B9.11	B-J		1-4300	3	X								/							
				3		X							/							
B9.11	B-J		1-4300	4	X															
				4		X														
B9.11	B-J		1-4300	7	X							/								
				7		X						/								
B9.11	B-J		1-4300	8	X															
				8		X														
B9.11	B-J		1-4300	9	X															
				9		X														
B9.11	B-J		1-4300	10	X							/								
				10		X						/								
B9.11	B-J		1-4300	11	X															
				11		X														
B9.11	B-J		1-4300	12	X															
				12		X														
B9.11	B-J		1-4300	13	X															
				13		X														

NSID COMPONENT SURVEILLANCE SCHEDULE

Effective Date 10/25/89 Process Date 03/09/90

COMPONENT: PIPE CIRCUMFERENTIAL WELDS 4" NPS AND GREATER

83S	83S		INT		EXAMINATION METHODS			FIRST INTERVAL			SECOND INTERVAL			THIRD INTERVAL			FOURTH INTERVAL			
ITEM NUMBER	CATEGORY NUMBER	DESCRIPTION	SKETCH NUMBER	IDENT. NUMBER	VOL.	SUR.	VIS.	1ST PER	2ND PER	3RD PER	1ST PER	2ND PER	3RD PER	1ST PER	2ND PER	3RD PER	1ST PER	2ND PER	3RD PER	REMARKS
B9.11	B-J		1-4300	14	X															
				14		X														
B9.11	B-J		1-4300	15	X								/							REFERENCE TABLE 4.0
				15		X														
B9.11	B-J		1-4301	1	X							/								
				1		X						/								
B9.11	B-J		1-4301	2	X															
				2		X														
B9.11	B-J		1-4301	3	X															
				3		X														
B9.11	B-J		1-4301	4	X															
				4		X														
B9.11	B-J		1-4301	5	X							/								
				5		X						/								
B9.11	B-J		1-4301	6	X							/								
				6		X						/								
B9.11	B-J		1-4301	7	X															
				7		X														
B9.11	B-J		1-4301	8	X							/								
				8		X						/								
B9.11	B-J		1-4301	9	X															
				9		X														
B9.11	B-J		1-4301	10	X															
				10		X														
B9.11	B-J		1-4301	11	X															
				11		X														
B9.11	B-J		1-4301	12	X															
				12		X														
B9.11	B-J		1-4302	32	X															
				32		X														
B9.11	B-J		1-4400	2	X						X									
				2		X														
B9.11	B-J		1-4400	3	X															
				3		X														
B9.11	B-J		1-4400	4	X															
				4		X														
B9.11	B-J		1-4400	7	X															
				7		X														
B9.11	B-J		1-4400	8	X															
				8		X														

NSID COMPONENT SURVEILLANCE SCHEDULE

Effective Date 10/25/89 Process Date 03/09/90

COMPONENT: PIPE CIRCUMFERENTIAL WELDS 4" NPS AND GREATER

83S	83S		INT		EXAMINATION METHODS			FIRST INTERVAL			SECOND INTERVAL			THIRD INTERVAL			FOURTH INTERVAL			
ITEM NUMBER	CATEGORY NUMBER	DESCRIPTION	SKETCH NUMBER	IDENT. NUMBER	VOL.	SUR.	VIS.	1ST PER	2ND PER	3RD PER	1ST PER	2ND PER	3RD PER	1ST PER	2ND PER	3RD PER	1ST PER	2ND PER	3RD PER	REMARKS
B9.11	B-J		1-4400	9	X															
				9		X														
B9.11	B-J		1-4400	10	X															
				10		X														
B9.11	B-J		1-4400	11	X															
				11		X														
B9.11	B-J		1-4400	12	X															
				12		X														
B9.11	B-J		1-4400	13	X							/								
				13		X						/								
B9.11	B-J		1-4400	14	X															
				14		X														
B9.11	B-J		1-4400	15	X								/							REFERENCE TABLE 4.0
				15		X														
B9.11	B-J		1-4401	1	X							/								
				1		X						/								
B9.11	B-J		1-4401	2	X															
				2		X														
B9.11	B-J		1-4401	3	X							/								
				3		X						/								
B9.11	B-J		1-4401	4	X							/								
				4		X						/								
B9.11	B-J		1-4401	5	X															
				5		X														
B9.11	B-J		1-4401	6	X															
				6		X														
B9.11	B-J		1-4401	7	X															
				7		X														
B9.11	B-J		1-4401	8	X															
				8		X														
B9.11	B-J		1-4401	9	X															
				9		X														
B9.11	B-J		1-4401	10	X															
				10		X														
B9.11	B-J		1-4401	11	X															
				11		X														
B9.11	B-J		1-4401	12	X															
				12		X														
B9.11	B-J		1-4402	2	X															
				2		X														

NSID COMPONENT SURVEILLANCE SCHEDULE

Effective Date 10/25/89 Process Date 03/09/90

COMPONENT: PIPE CIRCUMFERENTIAL WELDS 4" NPS AND GREATER

83S	83S		INT		EXAMINATION METHODS			FIRST INTERVAL			SECOND INTERVAL			THIRD INTERVAL			FOURTH INTERVAL			
ITEM NUMBER	CATEGORY NUMBER	DESCRIPTION	SKETCH NUMBER	IDENT. NUMBER	VOL.	SUR.	VIS.	1ST PER	2ND PER	3RD PER	1ST PER	2ND PER	3RD PER	1ST PER	2ND PER	3RD PER	1ST PER	2ND PER	3RD PER	REMARKS
B9.11	B-J		1-4500	2	X						X									
				2		X					X									
B9.11	B-J		1-4500	3	X							/								
				3		X						/								
B9.11	B-J		1-4500	4	X															
				4		X														
B9.11	B-J		1-4500	5	X															
				5		X														
B9.11	B-J		1-4500	6	X															
				6		X														
B9.11	B-J		1-4501	2	X															
				2		X														
B9.11	B-J		1-4501	3	X															
				3		X														
B9.11	B-J		1-4501	4	X							/								
				4		X						/								
B9.11	B-J		1-4501	5	X							/								
				5		X						/								
B9.11	B-J		1-4501	6	X															
				6		X														
B9.11	B-J		1-4501	7	X															
				7		X														
B9.11	B-J		1-4501	8	X															
				8		X														
B9.11	B-J		1-4501	9	X															
				9		X														
B9.11	B-J		1-4502	2	X						X									
				2		X					X									
B9.11	B-J		1-4502	3	X						X									
				3		X					X									
B9.11	B-J		1-4502	4	X															
				4		X														
B9.11	B-J		1-4502	5	X															
				5		X														
B9.11	B-J		1-4502	6	X															
				6		X														
B9.11	B-J		1-4502	7	X								/							
				7		X							/							
B9.11	B-J		1-4502	8	X								/							
				8		X							/							

NSID COMPONENT SURVEILLANCE SCHEDULE

Effective Date 10/25/89 Process Date 03/09/90

COMPONENT: PIPE CIRCUMFERENTIAL WELDS 4" NPS AND GREATER

83S	83S		INT		EXAMINATION METHODS			FIRST INTERVAL			SECOND INTERVAL			THIRD INTERVAL			FOURTH INTERVAL			
ITEM NUMBER	CATEGORY NUMBER	DESCRIPTION	SKETCH NUMBER	IDENT. NUMBER	VOL.	SUR.	VIS.	1ST PER	2ND PER	3RD PER	1ST PER	2ND PER	3RD PER	1ST PER	2ND PER	3RD PER	1ST PER	2ND PER	3RD PER	REMARKS
B9.11	B-J		1-4502	9	X															
				9		X														
B9.11	B-J		1-4503	2	X							/								
				2		X						/								
B9.11	B-J		1-4503	3	X							/								
				3		X						/								
B9.11	B-J		1-4503	4	X															
				4		X														
B9.11	B-J		1-4503	5	X															
				5		X														
B9.11	B-J		1-4503	6	X															
				6		X														
B9.11	B-J		1-4503	7	X															
				7		X														
B9.11	B-J		1-4503	8	X															
				8		X														
B9.11	B-J		1-4503	9	X															
				9		X														
B9.11	B-J		1-4504	1	X															
				1		X														
B9.11	B-J		1-4504	2	X															
				2		X														
B9.11	B-J		1-4504	3	X								/							
				3		X							/							
B9.11	B-J		1-4504	4	X															
				4		X														
B9.11	B-J		1-4504	5	X															
				5		X														
B9.11	B-J		1-4504	6	X															
				6		X														
B9.11	B-J		1-4504	7	X															
				7		X														
B9.11	B-J		1-4504	8	X															
				8		X														
B9.11	B-J		1-4504	9	X															
				9		X														
B9.11	B-J		1-4504	10	X															
				10		X														
B9.11	B-J		1-4504	11	X															
				11		X														

NSID COMPONENT SURVEILLANCE SCHEDULE

Effective Date 10/25/89 Process Date 03/09/90

COMPONENT: PIPE CIRCUMFERENTIAL WELDS 4" NPS AND GREATER

83S	83S		INT		EXAMINATION METHODS			FIRST INTERVAL			SECOND INTERVAL			THIRD INTERVAL			FOURTH INTERVAL			
ITEM NUMBER	CATEGORY NUMBER	DESCRIPTION	SKETCH NUMBER	IDENT. NUMBER	VOL.	SUR.	VIS.	1ST PER	2ND PER	3RD PER	1ST PER	2ND PER	3RD PER	1ST PER	2ND PER	3RD PER	1ST PER	2ND PER	3RD PER	REMARKS
B9.11	B-J		1-4504	12	X															
				12		X														
B9.11	B-J		1-4504	13	X															
				13		X														
B9.11	B-J		1-4504	14	X															
				14		X														
B9.11	B-J		1-4504	15	X															
				15		X														
B9.11	B-J		1-4505	2	X															
				2		X														
B9.11	B-J		1-4505	3	X						X									
				3		X					X									
B9.11	B-J		1-4505	4	X						X									
				4		X					X									
B9.11	B-J		1-4505	5	X						X									
				5		X					X									
		TOTAL ID's for B9.11		170 *							21	15	15							

NSID COMPONENT SURVEILLANCE SCHEDULE

Effective Date 10/25/89 Process Date 03/09/90

COMPONENT: PIPE LONGITUDINAL WELDS 4" NPS AND GREATER

83S	83S		INT		EXAMINATION METHODS			FIRST INTERVAL			SECOND INTERVAL			THIRD INTERVAL			FOURTH INTERVAL			
ITEM NUMBER	CATEGORY NUMBER	DESCRIPTION	SKETCH NUMBER	IDENT. NUMBER	VOL.	SUR.	VIS.	1ST PER	2ND PER	3RD PER	1ST PER	2ND PER	3RD PER	1ST PER	2ND PER	3RD PER	1ST PER	2ND PER	3RD PER	REMARKS
B9.12	B-J		1-4100	17	X															
				17		X														
B9.12	B-J		1-4100	18	X															
				18		X														
B9.12	B-J		1-4100	19	X															REFERENCE TABLE 4.0
				19		X					X									
B9.12	B-J		1-4100	20	X															REFERENCE TABLE 4.0
				20		X					X									
B9.12	B-J		1-4200	17	X															REFERENCE TABLE 4.0
				17		X							/							
B9.12	B-J		1-4200	18	X															REFERENCE TABLE 4.0
				18		X							/							
B9.12	B-J		1-4200	19	X															
				19		X														
B9.12	B-J		1-4200	20	X															
				20		X														
B9.12	B-J		1-4300	17	X															
				17		X														
B9.12	B-J		1-4300	18	X															
				18		X														
B9.12	B-J		1-4300	19	X															
				19		X														
B9.12	B-J		1-4300	20	X															
				20		X														
B9.12	B-J		1-4400	17	X															
				17		X														
B9.12	B-J		1-4400	18	X															
				18		X														
B9.12	B-J		1-4400	19	X															
				19		X														
B9.12	B-J		1-4400	20	X															
				20		X														
		TOTAL ID's for B9.12		16 *							2		2							

NSID COMPONENT SURVEILLANCE SCHEDULE

Effective Date 10/25/89 Process Date 03/09/90

COMPONENT: PIPE CIRC. WELDS LESS THAN 4" NPS

83S	83S		INT		EXAMINATION METHODS			FIRST INTERVAL			SECOND INTERVAL			THIRD INTERVAL			FOURTH INTERVAL			
ITEM NUMBER	CATEGORY NUMBER	DESCRIPTION	SKETCH NUMBER	IDENT. NUMBER	VOL.	SUR.	VIS.	1ST PER	2ND PER	3RD PER	1ST PER	2ND PER	3RD PER	1ST PER	2ND PER	3RD PER	1ST PER	2ND PER	3RD PER	REMARKS
B9.21	B-J		1-4103	2		X														REFERENCE TABLE 4.0
B9.21	B-J		1-4103	3		X					X									
B9.21	B-J		1-4103	4		X					X									
B9.21	B-J		1-4103	5		X														
B9.21	B-J		1-4103	6		X														
B9.21	B-J		1-4103	7		X														
B9.21	B-J		1-4103	10		X														
B9.21	B-J		1-4103	11		X														
B9.21	B-J		1-4103	13		X														
B9.21	B-J		1-4103	14(BW)		X														
B9.21	B-J		1-4104	11		X					X									
B9.21	B-J		1-4204	11		X					X									
B9.21	B-J		1-4303	11		X					X									
B9.21	B-J		1-4403	11		X					X									
B9.21	B-J		1-4505	6		X							/							
B9.21	B-J		1-4505	7		X							/							
B9.21	B-J		1-4505	8		X							/							
B9.21	B-J		1-4505	9		X														
B9.21	B-J		1-4505	10		X														
B9.21	B-J		1-4505	11		X														
B9.21	B-J		1-4505	12		X														
B9.21	B-J		1-4505	13		X					X									
B9.21	B-J		1-4505	14		X					X									
B9.21	B-J		1-4505	15		X														
B9.21	B-J		1-4505	16		X														
B9.21	B-J		1-4506	2		X														
B9.21	B-J		1-4506	3		X														
B9.21	B-J		1-4506	4		X														
B9.21	B-J		1-4506	5		X														
B9.21	B-J		1-4506	6		X														
B9.21	B-J		1-4506	7		X						/								
B9.21	B-J		1-4506	8		X						/								
B9.21	B-J		1-4506	9		X														
B9.21	B-J		1-4506	10		X														
B9.21	B-J		1-4506	11		X														
B9.21	B-J		1-4506	12		X														
B9.21	B-J		1-4506	13		X														

NSID COMPONENT SURVEILLANCE SCHEDULE

Effective Date 10/25/89 Process Date 03/09/90

COMPONENT: PIPE CIRC. WELDS LESS THAN 4" NPS

83S	83S		INT		EXAMINATION METHODS			FIRST INTERVAL			SECOND INTERVAL			THIRD INTERVAL			FOURTH INTERVAL			
ITEM NUMBER	CATEGORY NUMBER	DESCRIPTION	SKETCH NUMBER	IDENT. NUMBER	VOL.	SUR.	VIS.	1ST PER	2ND PER	3RD PER	1ST PER	2ND PER	3RD PER	1ST PER	2ND PER	3RD PER	1ST PER	2ND PER	3RD PER	REMARKS
B9.21	B-J		1-4506	14		X														
B9.21	B-J		1-4506	15		X														
B9.21	B-J		1-4506	16		X														
B9.21	B-J		1-4506	17		X														
B9.21	B-J		1-4506	18		X														
B9.21	B-J		1-4506	19		X						/								
B9.21	B-J		1-4506	20		X						/								
B9.21	B-J		1-4506	21		X						/								
B9.21	B-J		1-4506	22		X														
B9.21	B-J		1-4507	2		X														
B9.21	B-J		1-4507	3		X														
B9.21	B-J		1-4507	4		X														
B9.21	B-J		1-4507	5		X														
B9.21	B-J		1-4507	6		X														
B9.21	B-J		1-4507	7		X														
B9.21	B-J		1-4507	8		X														
B9.21	B-J		1-4507	9		X					X									
B9.21	B-J		1-4507	10		X					X									
B9.21	B-J		1-4507	11		X						/								
B9.21	B-J		1-4507	12		X						/								
B9.21	B-J		1-4507	13		X						/								
B9.21	B-J		1-4507	14		X														
B9.21	B-J		1-4507	15		X														
B9.21	B-J		1-4507	16		X														
B9.21	B-J		1-4507	17		X														
B9.21	B-J		1-4507	18		X														
B9.21	B-J		1-4507	19		X														
B9.21	B-J		1-4507	20		X														
B9.21	B-J		1-4507	21		X														
B9.21	B-J		1-4507	22		X														
B9.21	B-J		1-4507	23		X					X									
B9.21	B-J		1-4507	24		X							/							
B9.21	B-J		1-4507	25		X							/							
B9.21	B-J		1-4507	26		X							/							
B9.21	B-J		1-4507	27		X							/							
B9.21	B-J		1-4507	28		X														
B9.21	B-J		1-4507	29		X														
B9.21	B-J		1-4507	30		X														
B9.21	B-J		1-4600	1		X														
B9.21	B-J		1-4600	2		X														
B9.21	B-J		1-4600	3		X														

NSID COMPONENT SURVEILLANCE SCHEDULE

Effective Date 10/25/89 Process Date 03/09/90

COMPONENT: PIPE CIRC. WELDS LESS THAN 4" NPS

83S	83S		INT		EXAMINATION METHODS			FIRST INTERVAL			SECOND INTERVAL			THIRD INTERVAL			FOURTH INTERVAL			
ITEM NUMBER	CATEGORY NUMBER	DESCRIPTION	SKETCH NUMBER	IDENT. NUMBER	VOL.	SUR.	VIS.	1ST PER	2ND PER	3RD PER	1ST PER	2ND PER	3RD PER	1ST PER	2ND PER	3RD PER	1ST PER	2ND PER	3RD PER	REMARKS
B9.21	B-J		1-4600	4		X														
B9.21	B-J		1-4601	1		X														
B9.21	B-J		1-4601	2		X														
B9.21	B-J		1-4601	3		X														
B9.21	B-J		1-4601	4		X														
B9.21	B-J		1-4601	5		X														
B9.21	B-J		1-4601	6		X														
		TOTAL ID's for B9.21		85 *							11	8	7							

NSID COMPONENT SURVEILLANCE SCHEDULE

Effective Date 10/25/89 Process Date 03/09/90

COMPONENT: BRANCH PIPE CONNECTION WELDS 4" NPS AND GREATER

83S	83S		INT		EXAMINATION METHODS			FIRST INTERVAL			SECOND INTERVAL			THIRD INTERVAL			FOURTH INTERVAL			
ITEM NUMBER	CATEGORY NUMBER	DESCRIPTION	SKETCH NUMBER	IDENT. NUMBER	VOL.	SUR.	VIS.	1ST PER	2ND PER	3RD PER	1ST PER	2ND PER	3RD PER	1ST PER	2ND PER	3RD PER	1ST PER	2ND PER	3RD PER	REMARKS
B9.31	B-J		1-4101	16(BC)	X						X									REFERENCE TABLE 4.0
				16(BC)		X					X									
B9.31	B-J		1-4102	55(BC)	X															
				55(BC)		X														
B9.31	B-J		1-4201	1(BC)	X															
				1(BC)		X														
B9.31	B-J		1-4202	13(BC)	X															
				13(BC)		X														
B9.31	B-J		1-4203	1(BC)	X															
				1(BC)		X														
B9.31	B-J		1-4301	13(BC)	X															
				13(BC)		X														
B9.31	B-J		1-4302	33(BC)	X								/							
				33(BC)		X							/							
B9.31	B-J		1-4401	13(BC)	X							/								
				13(BC)		X						/								
B9.31	B-J		1-4402	1(BC)	X															
				1(BC)		X														
B9.31	B-J		1-4500	7(BC)	X															
				7(BC)		X														
		TOTAL ID's for B9.31		10 *							1	1	1							

NSID COMPONENT SURVEILLANCE SCHEDULE

Effective Date 10/25/89 Process Date 03/09/90

COMPONENT: BRANCH PIPE CONNECTION WELDS LESS THAN 4" NPS

83S	83S		INT		EXAMINATION METHODS			FIRST INTERVAL			SECOND INTERVAL			THIRD INTERVAL			FOURTH INTERVAL			
ITEM NUMBER	CATEGORY NUMBER	DESCRIPTION	SKETCH NUMBER	IDENT. NUMBER	VOL.	SUR.	VIS.	1ST PER	2ND PER	3RD PER	1ST PER	2ND PER	3RD PER	1ST PER	2ND PER	3RD PER	1ST PER	2ND PER	3RD PER	REMARKS
B9.32	B-J		1-4101	19(BC)		X														REFERENCE TABLE 4.0
B9.32	B-J		1-4102	53(BC)		X														
B9.32	B-J		1-4103	1(BC)		X					X									
B9.32	B-J		1-4104	12(BC)		X					X									
B9.32	B-J		1-4106	1(BC)		X														
B9.32	B-J		1-4107	25(BC)		X														
B9.32	B-J		1-4202	14(BC)		X														
B9.32	B-J		1-4204	12(BC)		X							/							
B9.32	B-J		1-4206	1(BC)		X														
B9.32	B-J		1-4207	29(BC)		X														
B9.32	B-J		1-4209	1(BC)		X							/							
B9.32	B-J		1-4301	14(BC)		X														
B9.32	B-J		1-4302	31(BC)		X														
B9.32	B-J		1-4303	12(BC)		X						/								
B9.32	B-J		1-4305	1(BC)		X														
B9.32	B-J		1-4306	31(BC)		X														
B9.32	B-J		1-4308	1(BC)		X														
B9.32	B-J		1-4401	16(BC)		X														
B9.32	B-J		1-4403	12(BC)		X						/								
B9.32	B-J		1-4405	1(BC)		X														
B9.32	B-J		1-4406	32(BC)		X														
B9.32	B-J		1-4408	1(BC)		X														

NSID COMPONENT SURVEILLANCE SCHEDULE

Effective Date 10/25/89 Process Date 03/09/90

COMPONENT: BRANCH PIPE CONNECTION WELDS LESS THAN 4" NPS

83S	83S		INT		EXAMINATION METHODS			FIRST INTERVAL			SECOND INTERVAL			THIRD INTERVAL			FOURTH INTERVAL			
ITEM NUMBER	CATEGORY NUMBER	DESCRIPTION	SKETCH NUMBER	IDENT. NUMBER	VOL.	SUR.	VIS.	1ST PER	2ND PER	3RD PER	1ST PER	2ND PER	3RD PER	1ST PER	2ND PER	3RD PER	1ST PER	2ND PER	3RD PER	REMARKS
B9.32	B-J		1-4506	1(BC)		X														
B9.32	B-J		1-4507	1(BC)		X														
B9.32	B-J		1-4508	29(BC)		X							/							
B9.32	B-J		1-4600	5(BC)		X														
B9.32	B-J		1-4601	7(BC)		X														
		TOTAL ID's for B9.32		27 *							2	2	3							

NSID COMPONENT SURVEILLANCE SCHEDULE

Effective Date 10/25/89 Process Date 03/09/90

COMPONENT: PIPE SOCKET WELDS

83S	83S		INT		EXAMINATION METHODS			FIRST INTERVAL			SECOND INTERVAL			THIRD INTERVAL			FOURTH INTERVAL			
ITEM NUMBER	CATEGORY NUMBER	DESCRIPTION	SKETCH NUMBER	IDENT. NUMBER	VOL.	SUR.	VIS.	1ST PER	2ND PER	3RD PER	1ST PER	2ND PER	3RD PER	1ST PER	2ND PER	3RD PER	1ST PER	2ND PER	3RD PER	REMARKS
B9.40	B-J		1-4101	17		X					X									REFERENCE TABLE 4.0
B9.40	B-J		1-4101	18		X					X									
B9.40	B-J		1-4102	1		X														
B9.40	B-J		1-4102	2		X														
B9.40	B-J		1-4102	3		X														
B9.40	B-J		1-4102	4		X														
B9.40	B-J		1-4102	5		X														
B9.40	B-J		1-4102	6		X														
B9.40	B-J		1-4102	7		X					X									
B9.40	B-J		1-4102	8		X					X									
B9.40	B-J		1-4102	9		X					X									
B9.40	B-J		1-4102	10		X					X									
B9.40	B-J		1-4102	11		X					X									
B9.40	B-J		1-4102	12		X					X									
B9.40	B-J		1-4102	13		X					X									
B9.40	B-J		1-4102	14		X					X									
B9.40	B-J		1-4102	15		X					X									
B9.40	B-J		1-4102	16		X														
B9.40	B-J		1-4102	17		X														
B9.40	B-J		1-4102	18		X														
B9.40	B-J		1-4102	19		X														
B9.40	B-J		1-4102	20		X														
B9.40	B-J		1-4102	21		X														
B9.40	B-J		1-4102	22		X														
B9.40	B-J		1-4102	23		X														
B9.40	B-J		1-4102	24		X														
B9.40	B-J		1-4102	25		X														
B9.40	B-J		1-4102	26		X														
B9.40	B-J		1-4102	27		X														
B9.40	B-J		1-4102	28		X														
B9.40	B-J		1-4102	29		X														
B9.40	B-J		1-4102	30		X														
B9.40	B-J		1-4102	31		X														
B9.40	B-J		1-4102	32		X														
B9.40	B-J		1-4102	33		X														
B9.40	B-J		1-4102	34		X														
B9.40	B-J		1-4102	35		X														
B9.40	B-J		1-4102	36		X														
B9.40	B-J		1-4102	37		X														
B9.40	B-J		1-4102	38		X														
B9.40	B-J		1-4102	39		X														
B9.40	B-J		1-4102	40		X							/							

NSID COMPONENT SURVEILLANCE SCHEDULE

Effective Date 10/25/89 Process Date 03/09/90

COMPONENT: PIPE SOCKET WELDS

83S	83S		INT		EXAMINATION METHODS			FIRST INTERVAL			SECOND INTERVAL			THIRD INTERVAL			FOURTH INTERVAL			
ITEM NUMBER	CATEGORY NUMBER	DESCRIPTION	SKETCH NUMBER	IDENT. NUMBER	VOL.	SUR.	VIS.	1ST PER	2ND PER	3RD PER	1ST PER	2ND PER	3RD PER	1ST PER	2ND PER	3RD PER	1ST PER	2ND PER	3RD PER	REMARKS
B9.40	B-J		1-4102	41		X							/							
B9.40	B-J		1-4102	42		X							/							
B9.40	B-J		1-4102	43		X							/							
B9.40	B-J		1-4102	44		X							/							
B9.40	B-J		1-4102	45		X							/							
B9.40	B-J		1-4102	46		X														
B9.40	B-J		1-4102	47		X														
B9.40	B-J		1-4102	48		X														
B9.40	B-J		1-4102	49		X														
B9.40	B-J		1-4102	50		X														
B9.40	B-J		1-4102	51		X														
B9.40	B-J		1-4102	52		X														
B9.40	B-J		1-4103	8		X														
B9.40	B-J		1-4103	9		X														
B9.40	B-J		1-4103	12		X														
B9.40	B-J		1-4103	15		X					X									
B9.40	B-J		1-4103	16		X					X									
B9.40	B-J		1-4103	17		X					X									
B9.40	B-J		1-4103	18		X					X									
B9.40	B-J		1-4103	19		X					X									
B9.40	B-J		1-4103	20		X														
B9.40	B-J		1-4106	2		X					X									
B9.40	B-J		1-4107	1		X														
B9.40	B-J		1-4107	2		X														
B9.40	B-J		1-4107	3		X														
B9.40	B-J		1-4107	4		X														
B9.40	B-J		1-4107	5		X					X									
B9.40	B-J		1-4107	6		X					X									
B9.40	B-J		1-4107	7		X					X									
B9.40	B-J		1-4107	8		X					X									
B9.40	B-J		1-4107	9		X														
B9.40	B-J		1-4107	10		X														
B9.40	B-J		1-4107	11		X														
B9.40	B-J		1-4107	12		X														
B9.40	B-J		1-4107	13		X														
B9.40	B-J		1-4107	14		X														
B9.40	B-J		1-4107	15		X														
B9.40	B-J		1-4107	16		X														
B9.40	B-J		1-4107	17		X														
B9.40	B-J		1-4107	18		X														

NSID COMPONENT SURVEILLANCE SCHEDULE

Effective Date 10/25/89 Process Date 03/09/90

COMPONENT: PIPE SOCKET WELDS

83S	83S		INT		EXAMINATION METHODS			FIRST INTERVAL			SECOND INTERVAL			THIRD INTERVAL			FOURTH INTERVAL			
ITEM NUMBER	CATEGORY NUMBER	DESCRIPTION	SKETCH NUMBER	IDENT. NUMBER	VOL.	SUR.	VIS.	1ST PER	2ND PER	3RD PER	1ST PER	2ND PER	3RD PER	1ST PER	2ND PER	3RD PER	1ST PER	2ND PER	3RD PER	REMARKS
B9.40	B-J		1-4107	19		X														
B9.40	B-J		1-4107	20		X														
B9.40	B-J		1-4107	21		X														
B9.40	B-J		1-4107	22		X														
B9.40	B-J		1-4107	23		X														
B9.40	B-J		1-4107	24		X														
B9.40	B-J		1-4107	26		X					X									
B9.40	B-J		1-4108	1		X					X									
B9.40	B-J		1-4108	2		X					X									
B9.40	B-J		1-4108	3		X					X									
B9.40	B-J		1-4108	4		X					X									
B9.40	B-J		1-4108	5		X					X									
B9.40	B-J		1-4108	6		X														
B9.40	B-J		1-4108	7		X														
B9.40	B-J		1-4108	8		X														
B9.40	B-J		1-4108	9		X														
B9.40	B-J		1-4108	10		X														
B9.40	B-J		1-4202	15		X														
B9.40	B-J		1-4202	16		X														
B9.40	B-J		1-4202	17		X														
B9.40	B-J		1-4202	18		X														
B9.40	B-J		1-4206	2		X					X									
B9.40	B-J		1-4207	1		X														
B9.40	B-J		1-4207	2		X														
B9.40	B-J		1-4207	3		X														
B9.40	B-J		1-4207	4		X														
B9.40	B-J		1-4207	5		X					X									
B9.40	B-J		1-4207	6		X					X									
B9.40	B-J		1-4207	7		X					X									
B9.40	B-J		1-4207	8		X					X									
B9.40	B-J		1-4207	9		X														
B9.40	B-J		1-4207	10		X														
B9.40	B-J		1-4207	11		X														
B9.40	B-J		1-4207	12		X														
B9.40	B-J		1-4207	13		X														
B9.40	B-J		1-4207	14		X														
B9.40	B-J		1-4207	15		X														
B9.40	B-J		1-4207	16		X														
B9.40	B-J		1-4207	17		X														

NSID COMPONENT SURVEILLANCE SCHEDULE

Effective Date 10/25/89 Process Date 03/09/90.

COMPONENT: PIPE SOCKET WELDS

83S	83S		INT		EXAMINATION METHODS			FIRST INTERVAL			SECOND INTERVAL			THIRD INTERVAL			FOURTH INTERVAL			
ITEM NUMBER	CATEGORY NUMBER	DESCRIPTION	SKETCH NUMBER	IDENT. NUMBER	VOL.	SUR.	VIS.	1ST PER	2ND PER	3RD PER	1ST PER	2ND PER	3RD PER	1ST PER	2ND PER	3RD PER	1ST PER	2ND PER	3RD PER	REMARKS
B9.40	B-J		1-4207	18		X														
B9.40	B-J		1-4207	19		X														
B9.40	B-J		1-4207	20		X														
B9.40	B-J		1-4207	21		X														
B9.40	B-J		1-4207	22		X														
B9.40	B-J		1-4207	23		X														
B9.40	B-J		1-4207	24		X														
B9.40	B-J		1-4207	25		X														
B9.40	B-J		1-4207	26		X														
B9.40	B-J		1-4207	27		X														
B9.40	B-J		1-4207	28		X														
B9.40	B-J		1-4208	1		X														
B9.40	B-J		1-4208	2		X														
B9.40	B-J		1-4208	3		X														
B9.40	B-J		1-4208	4		X														
B9.40	B-J		1-4208	5		X														
B9.40	B-J		1-4208	6		X														
B9.40	B-J		1-4208	7		X														
B9.40	B-J		1-4208	8		X														
B9.40	B-J		1-4208	9		X														
B9.40	B-J		1-4208	10		X														
B9.40	B-J		1-4208	11		X														
B9.40	B-J		1-4208	12		X														
B9.40	B-J		1-4208	13		X														
B9.40	B-J		1-4209	2		X														
B9.40	B-J		1-4209	3		X					X									
B9.40	B-J		1-4209	4		X					X									
B9.40	B-J		1-4209	5		X					X									
B9.40	B-J		1-4209	6		X					X									
B9.40	B-J		1-4209	7		X														
B9.40	B-J		1-4301	15		X														
B9.40	B-J		1-4301	16		X														
B9.40	B-J		1-4302	1		X							/							
B9.40	B-J		1-4302	2		X							/							
B9.40	B-J		1-4302	3		X							/							
B9.40	B-J		1-4302	4		X							/							
B9.40	B-J		1-4302	5		X							/							
B9.40	B-J		1-4302	6		X							/							
B9.40	B-J		1-4302	7		X														

NSID COMPONENT SURVEILLANCE SCHEDULE

Effective Date 10/25/89 Process Date 03/09/90

COMPONENT: PIPE SOCKET WELDS

83S	83S		INT		EXAMINATION METHODS			FIRST INTERVAL			SECOND INTERVAL			THIRD INTERVAL			FOURTH INTERVAL			
ITEM NUMBER	CATEGORY NUMBER	DESCRIPTION	SKETCH NUMBER	IDENT. NUMBER	VOL.	SUR.	VIS.	1ST PER	2ND PER	3RD PER	1ST PER	2ND PER	3RD PER	1ST PER	2ND PER	3RD PER	1ST PER	2ND PER	3RD PER	REMARKS
B9.40	B-J		1-4302	8		X														
B9.40	B-J		1-4302	9		X														
B9.40	B-J		1-4302	10		X														
B9.40	B-J		1-4302	11		X														
B9.40	B-J		1-4302	12		X														
B9.40	B-J		1-4302	13		X														
B9.40	B-J		1-4302	14		X														
B9.40	B-J		1-4302	15		X														
B9.40	B-J		1-4302	16		X														
B9.40	B-J		1-4302	17		X														
B9.40	B-J		1-4302	18		X														
B9.40	B-J		1-4302	19		X														
B9.40	B-J		1-4302	20		X						/								
B9.40	B-J		1-4302	21		X						/								
B9.40	B-J		1-4302	22		X						/								
B9.40	B-J		1-4302	23		X						/								
B9.40	B-J		1-4302	24		X						/								
B9.40	B-J		1-4302	25		X						/								
B9.40	B-J		1-4302	26		X						/								
B9.40	B-J		1-4302	27		X						/								
B9.40	B-J		1-4302	28		X						/								
B9.40	B-J		1-4302	29		X						/								
B9.40	B-J		1-4302	30		X														
B9.40	B-J		1-4305	2		X					X									
B9.40	B-J		1-4306	1		X						/								
B9.40	B-J		1-4306	2		X						/								
B9.40	B-J		1-4306	3		X						/								
B9.40	B-J		1-4306	4		X						/								
B9.40	B-J		1-4306	5		X						/								
B9.40	B-J		1-4306	6		X						/								
B9.40	B-J		1-4306	7		X						/								
B9.40	B-J		1-4306	8		X						/								
B9.40	B-J		1-4306	9		X														
B9.40	B-J		1-4306	10		X														
B9.40	B-J		1-4306	11		X														
B9.40	B-J		1-4306	12		X														
B9.40	B-J		1-4306	13		X														
B9.40	B-J		1-4306	14		X														
B9.40	B-J		1-4306	15		X														
B9.40	B-J		1-4306	16		X														
B9.40	B-J		1-4306	17		X														

NSID COMPONENT SURVEILLANCE SCHEDULE

Effective Date 10/25/89 Process Date 03/09/90

COMPONENT: PIPE SOCKET WELDS

83S	83S		INT		EXAMINATION METHODS			FIRST INTERVAL			SECOND INTERVAL			THIRD INTERVAL			FOURTH INTERVAL			
ITEM NUMBER	CATEGORY NUMBER	DESCRIPTION	SKETCH NUMBER	IDENT. NUMBER	VOL.	SUR.	VIS.	1ST PER	2ND PER	3RD PER	1ST PER	2ND PER	3RD PER	1ST PER	2ND PER	3RD PER	1ST PER	2ND PER	3RD PER	REMARKS
B9.40	B-J		1-4306	18		X														
B9.40	B-J		1-4306	19		X														
B9.40	B-J		1-4306	20		X														
B9.40	B-J		1-4306	21		X														
B9.40	B-J		1-4306	22		X														
B9.40	B-J		1-4306	23		X														
B9.40	B-J		1-4306	24		X														
B9.40	B-J		1-4306	25		X														
B9.40	B-J		1-4306	26		X														
B9.40	B-J		1-4306	27		X														
B9.40	B-J		1-4306	28		X														
B9.40	B-J		1-4306	29		X														
B9.40	B-J		1-4306	30		X														
B9.40	B-J		1-4306	32		X						/								
B9.40	B-J		1-4306	33		X						/								
B9.40	B-J		1-4306	34		X						/								
B9.40	B-J		1-4307	1		X							/							
B9.40	B-J		1-4307	2		X							/							
B9.40	B-J		1-4307	3		X							/							
B9.40	B-J		1-4307	4		X							/							
B9.40	B-J		1-4307	5		X							/							
B9.40	B-J		1-4307	6		X							/							
B9.40	B-J		1-4307	7		X							/							
B9.40	B-J		1-4307	8		X														
B9.40	B-J		1-4307	9		X														
B9.40	B-J		1-4307	10		X														
B9.40	B-J		1-4308	2		X														
B9.40	B-J		1-4308	3		X														
B9.40	B-J		1-4308	4		X														
B9.40	B-J		1-4308	5		X														
B9.40	B-J		1-4308	6		X														
B9.40	B-J		1-4308	7		X														
B9.40	B-J		1-4401	14		X														
B9.40	B-J		1-4401	15		X														
B9.40	B-J		1-4405	2		X					X									
B9.40	B-J		1-4406	1		X						/								
B9.40	B-J		1-4406	2		X						/								
B9.40	B-J		1-4406	3		X						/								

NSID COMPONENT SURVEILLANCE SCHEDULE

Effective Date 10/25/89 Process Date 03/09/90

COMPONENT: PIPE SOCKET WELDS

83S	83S		INT		EXAMINATION METHODS			FIRST INTERVAL			SECOND INTERVAL			THIRD INTERVAL			FOURTH INTERVAL			
ITEM NUMBER	CATEGORY NUMBER	DESCRIPTION	SKETCH NUMBER	IDENT. NUMBER	VOL.	SUR.	VIS.	1ST PER	2ND PER	3RD PER	1ST PER	2ND PER	3RD PER	1ST PER	2ND PER	3RD PER	1ST PER	2ND PER	3RD PER	REMARKS
B9.40	B-J		1-4406	4		X						/								
B9.40	B-J		1-4406	5		X						/								
B9.40	B-J		1-4406	6		X						/								
B9.40	B-J		1-4406	7		X														
B9.40	B-J		1-4406	8		X							/							
B9.40	B-J		1-4406	9		X							/							
B9.40	B-J		1-4406	10		X														
B9.40	B-J		1-4406	11		X														
B9.40	B-J		1-4406	12		X														
B9.40	B-J		1-4406	13		X														
B9.40	B-J		1-4406	14		X														
B9.40	B-J		1-4406	15		X														
B9.40	B-J		1-4406	16		X														
B9.40	B-J		1-4406	17		X														
B9.40	B-J		1-4406	18		X														
B9.40	B-J		1-4406	19		X														
B9.40	B-J		1-4406	20		X														
B9.40	B-J		1-4406	21		X														
B9.40	B-J		1-4406	22		X														
B9.40	B-J		1-4406	23		X														
B9.40	B-J		1-4406	24		X														
B9.40	B-J		1-4406	25		X														
B9.40	B-J		1-4406	26		X														
B9.40	B-J		1-4406	27		X														
B9.40	B-J		1-4406	28		X														
B9.40	B-J		1-4406	29		X														
B9.40	B-J		1-4406	30		X														
B9.40	B-J		1-4406	31		X														
B9.40	B-J		1-4407	1		X							/							
B9.40	B-J		1-4407	2		X							/							
B9.40	B-J		1-4407	3		X							/							
B9.40	B-J		1-4407	4		X							/							
B9.40	B-J		1-4407	5		X														
B9.40	B-J		1-4407	6		X														
B9.40	B-J		1-4407	7		X														
B9.40	B-J		1-4407	8		X														
B9.40	B-J		1-4407	9		X														
B9.40	B-J		1-4407	10		X														
B9.40	B-J		1-4407	11		X														
B9.40	B-J		1-4407	12		X														
B9.40	B-J		1-4408	2		X														

NSID COMPONENT SURVEILLANCE SCHEDULE

Effective Date 10/25/89 Process Date 03/09/90

COMPONENT: PIPE SOCKET WELDS

83S	83S		INT		EXAMINATION METHODS			FIRST INTERVAL			SECOND INTERVAL			THIRD INTERVAL			FOURTH INTERVAL			
ITEM NUMBER	CATEGORY NUMBER	DESCRIPTION	SKETCH NUMBER	IDENT. NUMBER	VOL.	SUR.	VIS.	1ST PER	2ND PER	3RD PER	1ST PER	2ND PER	3RD PER	1ST PER	2ND PER	3RD PER	1ST PER	2ND PER	3RD PER	REMARKS
B9.40	B-J		1-4408	3		X														
B9.40	B-J		1-4408	4		X														
B9.40	B-J		1-4408	5		X														
B9.40	B-J		1-4408	6		X														
B9.40	B-J		1-4408	7		X														
B9.40	B-J		1-4508	1		X														
B9.40	B-J		1-4508	2		X														
B9.40	B-J		1-4508	3		X														
B9.40	B-J		1-4508	4		X														
B9.40	B-J		1-4508	5		X														
B9.40	B-J		1-4508	6		X														
B9.40	B-J		1-4508	7		X														
B9.40	B-J		1-4508	8		X														
B9.40	B-J		1-4508	9		X														
B9.40	B-J		1-4508	10		X														
B9.40	B-J		1-4508	11		X														
B9.40	B-J		1-4508	12		X														
B9.40	B-J		1-4508	13		X														
B9.40	B-J		1-4508	14		X														
B9.40	B-J		1-4508	15		X														
B9.40	B-J		1-4508	16		X														
B9.40	B-J		1-4508	17		X														
B9.40	B-J		1-4508	18		X														
B9.40	B-J		1-4508	19		X														
B9.40	B-J		1-4508	20		X														
B9.40	B-J		1-4508	21		X														
B9.40	B-J		1-4508	22		X														
B9.40	B-J		1-4508	23		X														
B9.40	B-J		1-4508	24		X														
B9.40	B-J		1-4508	25		X														
B9.40	B-J		1-4508	26		X														
B9.40	B-J		1-4508	27		X							/							
B9.40	B-J		1-4508	28		X							/							
		TOTAL ID's for B9.40		313 *							38	27	27							

NSID COMPONENT SURVEILLANCE SCHEDULE

Effective Date 10/25/89 Process Date 03/09/90

COMPONENT: PIPE INTEGRALLY WELDED SUPPORTS

83S	83S		INT		EXAMINATION METHODS			FIRST INTERVAL			SECOND INTERVAL			THIRD INTERVAL			FOURTH INTERVAL			
ITEM NUMBER	CATEGORY NUMBER	DESCRIPTION	SKETCH NUMBER	IDENT. NUMBER	VOL.	SUR.	VIS.	1ST PER	2ND PER	3RD PER	1ST PER	2ND PER	3RD PER	1ST PER	2ND PER	3RD PER	1ST PER	2ND PER	3RD PER	REMARKS
B10.10	B-K-1		1-4202	PWR-4B		X					X									REFERENCE TABLE 4.0
B10.10	B-K-1		1-4301	PWR-4		X							/							
B10.10	B-K-1		1-4301	PWR-146A		X							/							
B10.10	B-K-1		1-4302	PWR-1		X							/							
B10.10	B-K-1		1-4401	PWR-4A		X						/								
B10.10	B-K-1		1-4500	PWR-120		X						/								
B10.10	B-K-1		1-4500	PWR-121		X						/								
		TOTAL ID's for B10.10		7 *							1	3	3							

NSID COMPONENT SURVEILLANCE SCHEDULE

Effective Date 10/25/89 Process Date 03/09/90

COMPONENT: PUMP INTEGRALLY WELDED SUPPORTS

83S	83S		INT		EXAMINATION METHODS			FIRST INTERVAL			SECOND INTERVAL			THIRD INTERVAL			FOURTH INTERVAL			
ITEM NUMBER	CATEGORY NUMBER	DESCRIPTION	SKETCH NUMBER	IDENT. NUMBER	VOL.	SUR.	VIS.	1ST PER	2ND PER	3RD PER	1ST PER	2ND PER	3RD PER	1ST PER	2ND PER	3RD PER	1ST PER	2ND PER	3RD PER	REMARKS
B10.20	B-K-1		1-5100	31-1SC		X					X									REFERENCE TABLE 4.0
B10.20	B-K-1		1-5100	31-2SC		X					X									
B10.20	B-K-1		1-5100	31-3SC		X					X									
B10.20	B-K-1		1-5100	32-1SC		X						/								
B10.20	B-K-1		1-5100	32-2SC		X						/								
B10.20	B-K-1		1-5100	32-3SC		X						/								
B10.20	B-K-1		1-5100	33-1SC		X							/							
B10.20	B-K-1		1-5100	33-2SC		X							/							
B10.20	B-K-1		1-5100	33-3SC		X							/							
B10.20	B-K-1		1-5100	34-1SC		X							/							
B10.20	B-K-1		1-5100	34-2SC		X							/							
B10.20	B-K-1		1-5100	34-3SC		X							/							
		TOTAL ID's for B10.20		12 *							3	3	6							

NSID COMPONENT SURVEILLANCE SCHEDULE

Effective Date 10/25/89 Process Date 03/09/90

COMPONENT: PUMP CASING WELDS

83S	83S		INT		EXAMINATION METHODS			FIRST INTERVAL			SECOND INTERVAL			THIRD INTERVAL			FOURTH INTERVAL			
ITEM NUMBER	CATEGORY NUMBER	DESCRIPTION	SKETCH NUMBER	IDENT. NUMBER	VOL.	SUR.	VIS.	1ST PER	2ND PER	3RD PER	1ST PER	2ND PER	3RD PER	1ST PER	2ND PER	3RD PER	1ST PER	2ND PER	3RD PER	REMARKS
B12.10	B-L-1		1-5100	31-1		X														REFERENCE TABLE 4.0
B12.10	B-L-1		1-5100	31-2		X														
B12.10	B-L-1		1-5100	31-3		X														
B12.10	B-L-1		1-5100	32-1		X														
B12.10	B-L-1		1-5100	32-2		X														
B12.10	B-L-1		1-5100	32-3		X														
B12.10	B-L-1		1-5100	33-1		X							/							
B12.10	B-L-1		1-5100	33-2		X							/							
B12.10	B-L-1		1-5100	33-3		X							/							
B12.10	B-L-1		1-5100	34-1		X														
B12.10	B-L-1		1-5100	34-2		X														
B12.10	B-L-1		1-5100	34-3		X														
		TOTAL ID's for B12.10		12 *									3							

NSID COMPONENT SURVEILLANCE SCHEDULE

Effective Date 10/25/89 Process Date 03/09/90

COMPONENT: PUMP CASING

83S	83S		INT		EXAMINATION METHODS			FIRST INTERVAL			SECOND INTERVAL			THIRD INTERVAL			FOURTH INTERVAL			
ITEM NUMBER	CATEGORY NUMBER	DESCRIPTION	SKETCH NUMBER	IDENT. NUMBER	VOL.	SUR.	VIS.	1ST PER	2ND PER	3RD PER	1ST PER	2ND PER	3RD PER	1ST PER	2ND PER	3RD PER	1ST PER	2ND PER	3RD PER	REMARKS
B12.20	B-L-2		1-5100	CASING 31			X													REFERENCE TABLE 4.0
B12.20	B-L-2		1-5100	CASING 32			X													
B12.20	B-L-2		1-5100	CASING 33			X						/							
B12.20	B-L-2		1-5100	CASING 34			X													
		TOTAL ID's for B12.20		4 *									1							

NSID COMPONENT SURVEILLANCE SCHEDULE

Effective Date 10/25/89 Process Date 03/09/90

COMPONENT: VALVE BODIES EXCEEDING 4" NPS

83S	83S		INT		EXAMINATION METHODS			FIRST INTERVAL			SECOND INTERVAL			THIRD INTERVAL			FOURTH INTERVAL			
ITEM NUMBER	CATEGORY NUMBER	DESCRIPTION	SKETCH NUMBER	IDENT. NUMBER	VOL.	SUR.	VIS.	1ST PER	2ND PER	3RD PER	1ST PER	2ND PER	3RD PER	1ST PER	2ND PER	3RD PER	1ST PER	2ND PER	3RD PER	REMARKS
B12.50	B-M-2		1-4101	838A INT.			X													VT-3. REF.TABLE 4.0
B12.50	B-M-2		1-4101	895A INT.			X													
B12.50	B-M-2		1-4101	897A INT.			X													
B12.50	B-M-2		1-4201	730 INT.			X						/							
B12.50	B-M-2		1-4201	731 INT.			X													
B12.50	B-M-2		1-4202	838B INT.			X													
B12.50	B-M-2		1-4202	895B INT.			X													
B12.50	B-M-2		1-4202	897B INT.			X													
B12.50	B-M-2		1-4301	838C INT.			X													
B12.50	B-M-2		1-4301	895C INT.			X				X									
B12.50	B-M-2		1-4301	897C INT.			X				X									
B12.50	B-M-2		1-4401	838D INT.			X						/							
B12.50	B-M-2		1-4401	895D INT.			X													
B12.50	B-M-2		1-4401	897D INT.			X													
B12.50	B-M-2		1-4501	PCV464 INT.			X				X									
B12.50	B-M-2		1-4502	PCV466 INT.			X													
B12.50	B-M-2		1-4503	PCV468 INT.			X				X									
		TOTAL ID's for B12.50		17 *							4		2							

NSID COMPONENT SURVEILLANCE SCHEDULE

Effective Date 10/25/89 Process Date 03/09/90.

COMPONENT: REACTOR VESSEL INTERIOR

83S	83S		INT		EXAMINATION METHODS			FIRST INTERVAL			SECOND INTERVAL			THIRD INTERVAL			FOURTH INTERVAL			
ITEM NUMBER	CATEGORY NUMBER	DESCRIPTION	SKETCH NUMBER	IDENT. NUMBER	VOL.	SUR.	VIS.	1ST PER	2ND PER	3RD PER	1ST PER	2ND PER	3RD PER	1ST PER	2ND PER	3RD PER	1ST PER	2ND PER	3RD PER	REMARKS
B13.10	B-N-1		1-1200	VESS.INT.			X				X	/	/							VT-3
		TOTAL ID's for B13.10		1 *							1	1	1							

NSID COMPONENT SURVEILLANCE SCHEDULE

Effective Date 10/25/89 Process Date 03/09/90

COMPONENT: R.V. INTERIOR ATTACHMENTS WITHIN BELTLINE REGION

83S	83S		INT		EXAMINATION METHODS			FIRST INTERVAL			SECOND INTERVAL			THIRD INTERVAL			FOURTH INTERVAL			
ITEM NUMBER	CATEGORY NUMBER	DESCRIPTION	SKETCH NUMBER	IDENT. NUMBER	VOL.	SUR.	VIS.	1ST PER	2ND PER	3RD PER	1ST PER	2ND PER	3RD PER	1ST PER	2ND PER	3RD PER	1ST PER	2ND PER	3RD PER	REMARKS
B13.50	B-N-2		1-1200	INT.ATTCH.			X						/							VT-1
		TOTAL ID's for B13.50		1 *									1							

NSID COMPONENT SURVEILLANCE SCHEDULE

Effective Date 10/25/89 Process Date 03/09/90

COMPONENT: R.V. INTERIOR ATTACHMENTS BEYOND BELTLINE REGION

83S	83S		INT		EXAMINATION METHODS			FIRST INTERVAL			SECOND INTERVAL			THIRD INTERVAL			FOURTH INTERVAL			
ITEM NUMBER	CATEGORY NUMBER	DESCRIPTION	SKETCH NUMBER	IDENT. NUMBER	VOL.	SUR.	VIS.	1ST PER	2ND PER	3RD PER	1ST PER	2ND PER	3RD PER	1ST PER	2ND PER	3RD PER	1ST PER	2ND PER	3RD PER	REMARKS
B13.60	B-N-2		1-1200	INT.ATACH.			X						/							VT-3
		TOTAL ID's for B13.60		1 *									1							

NSID COMPONENT SURVEILLANCE SCHEDULE

Effective Date 10/25/89 Process Date 03/09/90

COMPONENT: R.V. CORE SUPPORT STRUCTURE

83S	83S		INT		EXAMINATION METHODS			FIRST INTERVAL			SECOND INTERVAL			THIRD INTERVAL			FOURTH INTERVAL			
ITEM NUMBER	CATEGORY NUMBER	DESCRIPTION	SKETCH NUMBER	IDENT. NUMBER	VOL.	SUR.	VIS.	1ST PER	2ND PER	3RD PER	1ST PER	2ND PER	3RD PER	1ST PER	2ND PER	3RD PER	1ST PER	2ND PER	3RD PER	REMARKS
B13.70	B-N-3		1-1200	CORE SUPP.			X						/							VT-3
		TOTAL ID's for B13.70		1 *									1							

NSID COMPONENT SURVEILLANCE SCHEDULE

Effective Date 10/25/89 Process Date 03/09/90

COMPONENT: R.V. WELDS IN CRD HOUSING

83S	83S		INT		EXAMINATION METHODS			FIRST INTERVAL			SECOND INTERVAL			THIRD INTERVAL			FOURTH INTERVAL			
ITEM NUMBER	CATEGORY NUMBER	DESCRIPTION	SKETCH NUMBER	IDENT. NUMBER	VOL.	SUR.	VIS.	1ST PER	2ND PER	3RD PER	1ST PER	2ND PER	3RD PER	1ST PER	2ND PER	3RD PER	1ST PER	2ND PER	3RD PER	REMARKS
B14.10	B-O		1-1300	46		X														
B14.10	B-O		1-1300	47		X														
B14.10	B-O		1-1300	48		X														
B14.10	B-O		1-1300	49		X														
B14.10	B-O		1-1300	50		X														
B14.10	B-O		1-1300	51		X														
B14.10	B-O		1-1300	52		X														
B14.10	B-O		1-1300	53		X														
B14.10	B-O		1-1300	54		X														
B14.10	B-O		1-1300	55		X														
B14.10	B-O		1-1300	56		X														
B14.10	B-O		1-1300	57		X							/							
B14.10	B-O		1-1300	58		X							/							
B14.10	B-O		1-1300	59		X														
B14.10	B-O		1-1300	60		X														
B14.10	B-O		1-1300	61		X														
B14.10	B-O		1-1300	62		X							/							
B14.10	B-O		1-1300	63		X														
B14.10	B-O		1-1300	64		X														
B14.10	B-O		1-1300	65		X														
B14.10	B-O		1-1300	66		X														
B14.10	B-O		1-1300	67		X														
B14.10	B-O		1-1300	68		X														
B14.10	B-O		1-1300	69		X							/							
B14.10	B-O		1-1300	70		X														
B14.10	B-O		1-1300	71		X														
B14.10	B-O		1-1300	72		X														
B14.10	B-O		1-1300	73		X														
B14.10	B-O		1-1300	74		X														
B14.10	B-O		1-1300	75		X														
B14.10	B-O		1-1300	76		X														
B14.10	B-O		1-1300	77		X														
B14.10	B-O		1-1300	78		X														
		TOTAL ID's for B14.10		33 *									4							

NSID COMPONENT SURVEILLANCE SCHEDULE

Effective Date 10/25/89 Process Date 03/09/90

COMPONENT: R.V. PRESSURE RETAINING BOUNDARY

83S	83S		INT		EXAMINATION METHODS			FIRST INTERVAL			SECOND INTERVAL			THIRD INTERVAL			FOURTH INTERVAL			
ITEM NUMBER	CATEGORY NUMBER	DESCRIPTION	SKETCH NUMBER	IDENT. NUMBER	VOL.	SUR.	VIS.	1ST PER	2ND PER	3RD PER	1ST PER	2ND PER	3RD PER	1ST PER	2ND PER	3RD PER	1ST PER	2ND PER	3RD PER	REMARKS
B15.10	B-P		1-9100	1 LEAK			X				X	/	/							VT-2. REF.TABLE 4.0
		TOTAL ID's for B15.10		1 *							1	1	1							

NSID COMPONENT SURVEILLANCE SCHEDULE

Effective Date 10/25/89 Process Date 03/09/90

COMPONENT: R.V. PRESSURE RETAINING BOUNDARY

83S	83S		INT		EXAMINATION METHODS			FIRST INTERVAL			SECOND INTERVAL			THIRD INTERVAL			FOURTH INTERVAL			
ITEM NUMBER	CATEGORY NUMBER	DESCRIPTION	SKETCH NUMBER	IDENT. NUMBER	VOL.	SUR.	VIS.	1ST PER	2ND PER	3RD PER	1ST PER	2ND PER	3RD PER	1ST PER	2ND PER	3RD PER	1ST PER	2ND PER	3RD PER	REMARKS
B15.11	B-P		1-9600	1 HYDRO			X						/							VT-2. REF.TABLE 4.0
		TOTAL ID's for B15.11		1 *									1							

NSID COMPONENT SURVEILLANCE SCHEDULE

Effective Date 10/25/89 Process Date 03/09/90

COMPONENT: PRESSURIZER - PRESSURE RETAINING BOUNDARY

83S	83S		INT		EXAMINATION METHODS			FIRST INTERVAL			SECOND INTERVAL			THIRD INTERVAL			FOURTH INTERVAL			
ITEM NUMBER	CATEGORY NUMBER	DESCRIPTION	SKETCH NUMBER	IDENT. NUMBER	VOL.	SUR.	VIS.	1ST PER	2ND PER	3RD PER	1ST PER	2ND PER	3RD PER	1ST PER	2ND PER	3RD PER	1ST PER	2ND PER	3RD PER	REMARKS
B15.20	B-P		1-9100	2 LEAK			X				X	/	/							VT-2. REF.TABLE 4.0
		TOTAL ID's for B15.20		1 *							1	1	1							

NSID COMPONENT SURVEILLANCE SCHEDULE

Effective Date 10/25/89 Process Date 03/09/90

COMPONENT: PRESSURIZER - PRESSURE RETAINING BOUNDARY

83S	83S		INT		EXAMINATION METHODS			FIRST INTERVAL			SECOND INTERVAL			THIRD INTERVAL			FOURTH INTERVAL			
ITEM NUMBER	CATEGORY NUMBER	DESCRIPTION	SKETCH NUMBER	IDENT. NUMBER	VOL.	SUR.	VIS.	1ST PER	2ND PER	3RD PER	1ST PER	2ND PER	3RD PER	1ST PER	2ND PER	3RD PER	1ST PER	2ND PER	3RD PER	REMARKS
B15.21	B-P		1-9600	2 HYDRO			X						/							VT-2. REF. TABLE 4.0
		TOTAL ID's for B15.21		1 *									1							

NSID COMPONENT SURVEILLANCE SCHEDULE

Effective Date 10/25/89 Process Date 03/09/90

COMPONENT: STM. GEN. PRESSURE RETAINING BOUNDARY

83S	83S		INT		EXAMINATION METHODS			FIRST INTERVAL			SECOND INTERVAL			THIRD INTERVAL			FOURTH INTERVAL			
ITEM NUMBER	CATEGORY NUMBER	DESCRIPTION	SKETCH NUMBER	IDENT. NUMBER	VOL.	SUR.	VIS.	1ST PER	2ND PER	3RD PER	1ST PER	2ND PER	3RD PER	1ST PER	2ND PER	3RD PER	1ST PER	2ND PER	3RD PER	REMARKS
B15.30	B-P		1-9100	3 LEAK			X				X	/	/							VT-2. REF.TABLE 4.0
		TOTAL ID's for B15.30		1 *							1	1	1							

NSID COMPONENT SURVEILLANCE SCHEDULE

Effective Date 10/25/89 Process Date 03/09/90

COMPONENT: STM. GEN: PRESSURE RETAINING BOUNDARY

83S	83S		INT		EXAMINATION METHODS			FIRST INTERVAL			SECOND INTERVAL			THIRD INTERVAL			FOURTH INTERVAL			
ITEM NUMBER	CATEGORY NUMBER	DESCRIPTION	SKETCH NUMBER	IDENT. NUMBER	VOL.	SUR.	VIS.	1ST PER	2ND PER	3RD PER	1ST PER	2ND PER	3RD PER	1ST PER	2ND PER	3RD PER	1ST PER	2ND PER	3RD PER	REMARKS
B15.31	B-P		1-9600	3 HYDRO			X						/							VT-2. REF.TABLE 4.0
		TOTAL ID's for B15.31		1 *									1							

NSID COMPONENT SURVEILLANCE SCHEDULE

Effective Date 10/25/89 Process Date 03/09/90

COMPONENT: PIPING PRESSURE RETAINING BOUNDARY

83S	83S		INT		EXAMINATION METHODS			FIRST INTERVAL			SECOND INTERVAL			THIRD INTERVAL			FOURTH INTERVAL			
ITEM NUMBER	CATEGORY NUMBER	DESCRIPTION	SKETCH NUMBER	IDENT. NUMBER	VOL.	SUR.	VIS.	1ST PER	2ND PER	3RD PER	1ST PER	2ND PER	3RD PER	1ST PER	2ND PER	3RD PER	1ST PER	2ND PER	3RD PER	REMARKS
B15.50	B-P		1-9100	4 LEAK			X				X	/	/							VT-2. REF.TABLE 4.0
		TOTAL ID's for B15.50		1 *							1	1	1							

NSID COMPONENT SURVEILLANCE SCHEDULE

Effective Date 10/25/89 Process Date 03/09/90

COMPONENT: PIPING PRESSURE RETAINING BOUNDARY

83S	83S		INT		EXAMINATION METHODS			FIRST INTERVAL			SECOND INTERVAL			THIRD INTERVAL			FOURTH INTERVAL			
ITEM NUMBER	CATEGORY NUMBER	DESCRIPTION	SKETCH NUMBER	IDENT. NUMBER	VOL.	SUR.	VIS.	1ST PER	2ND PER	3RD PER	1ST PER	2ND PER	3RD PER	1ST PER	2ND PER	3RD PER	1ST PER	2ND PER	3RD PER	REMARKS
B15.51	B-P		1-9600	4 HYDRO			X						/							VT-2. REF.TABLE 4.0
		TOTAL ID's for B15.51		1 *									1							

NSID COMPONENT SURVEILLANCE SCHEDULE

Effective Date 10/25/89 Process Date 03/09/90

COMPONENT: PUMP PRESSURE RETAINING BOUNDARY

83S	83S		INT		EXAMINATION METHODS			FIRST INTERVAL			SECOND INTERVAL			THIRD INTERVAL			FOURTH INTERVAL			
ITEM NUMBER	CATEGORY NUMBER	DESCRIPTION	SKETCH NUMBER	IDENT. NUMBER	VOL.	SUR.	VIS.	1ST PER	2ND PER	3RD PER	1ST PER	2ND PER	3RD PER	1ST PER	2ND PER	3RD PER	1ST PER	2ND PER	3RD PER	REMARKS
B15.60	B-P		1-9100	5 LEAK			X				X	/	/							VT-2. REF.TABLE 4.0
		TOTAL ID's for B15.60		1 *							1	1	1							

NSID COMPONENT SURVEILLANCE SCHEDULE

Effective Date 10/25/89 Process Date 03/09/90

COMPONENT: PUMP PRESSURE RETAINING BOUNDARY

83S	83S		INT		EXAMINATION METHODS			FIRST INTERVAL			SECOND INTERVAL			THIRD INTERVAL			FOURTH INTERVAL			
ITEM NUMBER	CATEGORY NUMBER	DESCRIPTION	SKETCH NUMBER	IDENT. NUMBER	VOL.	SUR.	VIS.	1ST PER	2ND PER	3RD PER	1ST PER	2ND PER	3RD PER	1ST PER	2ND PER	3RD PER	1ST PER	2ND PER	3RD PER	REMARKS
B15.61	B-P		1-9600	5 HYDRO			X						/							VT-2.REF.TABLE 4.0
		TOTAL ID's for B15.61		1 *									1							

NSID COMPONENT SURVEILLANCE SCHEDULE

Effective Date 10/25/89 Process Date 03/09/90

COMPONENT: VALVE PRESSURE RETAINING BOUNDARY

83S	83S		INT		EXAMINATION METHODS			FIRST INTERVAL			SECOND INTERVAL			THIRD INTERVAL			FOURTH INTERVAL			
ITEM NUMBER	CATEGORY NUMBER	DESCRIPTION	SKETCH NUMBER	IDENT. NUMBER	VOL.	SUR.	VIS.	1ST PER	2ND PER	3RD PER	1ST PER	2ND PER	3RD PER	1ST PER	2ND PER	3RD PER	1ST PER	2ND PER	3RD PER	REMARKS
B15.70	B-P		1-9100	6 LEAK			X				X	/	/							VT-2.REF.TABLE 4.0
		TOTAL ID's for B15.70		1 *							1	1	1							

NSID COMPONENT SURVEILLANCE SCHEDULE

Effective Date 10/25/89 Process Date 03/09/90

COMPONENT: VALVE PRESSURE RETAINING BOUNDARY

83S	83S		INT		EXAMINATION METHODS			FIRST INTERVAL			SECOND INTERVAL			THIRD INTERVAL			FOURTH INTERVAL			
ITEM NUMBER	CATEGORY NUMBER	DESCRIPTION	SKETCH NUMBER	IDENT. NUMBER	VOL.	SUR.	VIS.	1ST PER	2ND PER	3RD PER	1ST PER	2ND PER	3RD PER	1ST PER	2ND PER	3RD PER	1ST PER	2ND PER	3RD PER	REMARKS
B15.71	B-P		1-9600	6 HYDRO			X						/							VT-2.REF.TABLE 4.0
		TOTAL ID's for B15.71		1 *									1							

NSID COMPONENT SURVEILLANCE SCHEDULE

Effective Date 10/25/89 Process Date 03/09/90

COMPONENT: STM. GEN. TUBING - U - TUBE DESIGN

83S	83S		INT		EXAMINATION METHODS			FIRST INTERVAL			SECOND INTERVAL			THIRD INTERVAL			FOURTH INTERVAL			
ITEM NUMBER	CATEGORY NUMBER	DESCRIPTION	SKETCH NUMBER	IDENT. NUMBER	VOL.	SUR.	VIS.	1ST PER	2ND PER	3RD PER	1ST PER	2ND PER	3RD PER	1ST PER	2ND PER	3RD PER	1ST PER	2ND PER	3RD PER	REMARKS
B16.20	B-Q		1-3101	U-TUBING	X															REFERENCE TABLE 4.0
		TOTAL ID's for B16.20		1 *																

NSID COMPONENT SURVEILLANCE SCHEDULE

Effective Date 10/25/89 Process Date 03/09/90

COMPONENT: *** CLASS TOTALS FOR IWB ***

83S	83S		INT		EXAMINATION METHODS			FIRST INTERVAL			SECOND INTERVAL			THIRD INTERVAL			FOURTH INTERVAL			
ITEM NUMBER	CATEGORY NUMBER	DESCRIPTION	SKETCH NUMBER	IDENT. NUMBER	VOL.	SUR.	VIS.	1ST PER	2ND PER	3RD PER	1ST PER	2ND PER	3RD PER	1ST PER	2ND PER	3RD PER	1ST PER	2ND PER	3RD PER	REMARKS
		CLASS TOTAL		1874 **							813	419	562							

NUCLEAR ENERGY SYSTEMS
FORM D037 08/25/87 Westinghouse Proprietary
Page 1 Time 15:40:08

NSID COMPONENT SURVEILLANCE SCHEDULE

Effective Date 09/05/89 Process Date 03/09/90

COMPONENT: VESSEL SHELL CIRCUMFERENTIAL WELDS

83S	83S		INT		EXAMINATION METHODS			FIRST INTERVAL			SECOND INTERVAL			THIRD INTERVAL			FOURTH INTERVAL			
ITEM NUMBER	CATEGORY NUMBER	DESCRIPTION	SKETCH NUMBER	IDENT. NUMBER	VOL.	SUR.	VIS.	1ST PER	2ND PER	3RD PER	1ST PER	2ND PER	3RD PER	1ST PER	2ND PER	3RD PER	1ST PER	2ND PER	3RD PER	REMARKS
C1.10	C-A		2-1101	31-3	X						X	/	/							REFERENCE TABLE 4.0
C1.10	C-A		2-1101	31-5	X						X	/	/							REFERENCE TABLE 4.0
C1.10	C-A		2-1101	31-6	X						X	/	/							REFERENCE TABLE 4.0
C1.10	C-A		2-1101	32-3	X						X									REFERENCE TABLE 4.0
C1.10	C-A		2-1101	32-5	X						X									REFERENCE TABLE 4.0
C1.10	C-A		2-1101	32-6	X						X									REFERENCE TABLE 4.0
C1.10	C-A		2-1101	33-3	X						X									REFERENCE TABLE 4.0
C1.10	C-A		2-1101	33-5	X						X									REFERENCE TABLE 4.0
C1.10	C-A		2-1101	33-6	X						X									REFERENCE TABLE 4.0
C1.10	C-A		2-1101	34-3	X						X									REFERENCE TABLE 4.0
C1.10	C-A		2-1101	34-5	X						X									REFERENCE TABLE 4.0
C1.10	C-A		2-1101	34-6	X						X									REFERENCE TABLE 4.0
C1.10	C-A		2-1120	31-2	X						X	/	/							REFERENCE TABLE 4.0
C1.10	C-A		2-1120	32-2	X															
C1.10	C-A		2-1130	2		X					X	/	/							REFERENCE TABLE 4.0
C1.10	C-A		2-1140	2	X						X	/	/							REFERENCE TABLE 4.0
C1.10	C-A		2-1150	2	X						X	/	/							REFERENCE TABLE 4.0
C1.10	C-A		2-1210	31-3	X															
C1.10	C-A		2-1210	32-3	X						X	/	/							REFERENCE TABLE 4.0
C1.10	C-A		2-1210	33-3	X															
C1.10	C-A		2-1210	34-3	X															
C1.10	C-A		2-1300	31-2	X						X	/	/							REFERENCE TABLE 4.0
C1.10	C-A		2-1300	32-2	X															
C1.10	C-A		2-1310	2	X						X	/	/							REFERENCE TABLE 4.0
C1.10	C-A		2-1320	2		X					X	/	/							REFERENCE TABLE 4.0
		TOTAL ID's for C1.10		25 *							20	11	11							

NSID COMPONENT SURVEILLANCE SCHEDULE

Effective Date 09/05/89 Process Date 03/09/90.

COMPONENT: VESSEL HEAD CIRCUMFERENTIAL WELDS

83S	83S		INT		EXAMINATION METHODS			FIRST INTERVAL			SECOND INTERVAL			THIRD INTERVAL			FOURTH INTERVAL			
ITEM NUMBER	CATEGORY NUMBER	DESCRIPTION	SKETCH NUMBER	IDENT. NUMBER	VOL.	SUR.	VIS.	1ST PER	2ND PER	3RD PER	1ST PER	2ND PER	3RD PER	1ST PER	2ND PER	3RD PER	1ST PER	2ND PER	3RD PER	REMARKS
C1.20	C-A		2-1101	31-8	X						X	/	/							REFERENCE TABLE 4.0
C1.20	C-A		2-1101	32-8	X						X									REFERENCE TABLE 4.0
C1.20	C-A		2-1101	33-8	X						X									REFERENCE TABLE 4.0
C1.20	C-A		2-1101	34-8	X						X									REFERENCE TABLE 4.0
C1.20	C-A		2-1110	1	X															
C1.20	C-A		2-1110	4	X															
C1.20	C-A		2-1110	5	X															
C1.20	C-A		2-1110	8	X															
C1.20	C-A		2-1110	9	X						X									REFERENCE TABLE 4.0
C1.20	C-A		2-1110	12	X								/							REFERENCE TABLE 4.0
C1.20	C-A		2-1120	31-1	X						X	/	/							REFERENCE TABLE 4.0
C1.20	C-A		2-1120	32-1	X															
C1.20	C-A		2-1130	1		X					X	/	/							REFERENCE TABLE 4.0
C1.20	C-A		2-1140	1	X						X	/	/							REFERENCE TABLE 4.0
C1.20	C-A		2-1150	1	X						X	/	/							REFERENCE TABLE 4.0
C1.20	C-A		2-1200	1	X						X	/	/							REFERENCE TABLE 4.0
C1.20	C-A		2-1200	2	X						X	/	/							REFERENCE TABLE 4.0
C1.20	C-A		2-1210	31-1	X															
C1.20	C-A		2-1210	31-4	X															
C1.20	C-A		2-1210	32-1	X						X	/	/							REFERENCE TABLE 4.0
C1.20	C-A		2-1210	32-4	X						X	/	/							REFERENCE TABLE 4.0
C1.20	C-A		2-1210	33-1	X															
C1.20	C-A		2-1210	33-4	X															
C1.20	C-A		2-1210	34-1	X															
C1.20	C-A		2-1210	34-4	X															
C1.20	C-A		2-1220	1	X						X	/	/							REFERENCE TABLE 4.0
C1.20	C-A		2-1220	2	X						X	/	/							REFERENCE TABLE 4.0
C1.20	C-A		2-1300	31-1	X						X	/	/							REFERENCE TABLE 4.0
C1.20	C-A		2-1300	32-1	X															
C1.20	C-A		2-1310	1	X						X	/	/							REFERENCE TABLE 4.0
C1.20	C-A		2-1310	3	X						X	/	/							REFERENCE TABLE 4.0
C1.20	C-A		2-1320	1		X					X	/	/							REFERENCE TABLE 4.0

NUCLEAR ENERGY SYSTEMS
FORM D037 08/25/87 Westinghouse Proprietary

NSID COMPONENT SURVEILLANCE SCHEDULE

Effective Date 09/05/89 Process Date 03/09/90

COMPONENT: VESSEL HEAD CIRCUMFERENTIAL WELDS

83S	83S		INT		EXAMINATION METHODS			FIRST INTERVAL			SECOND INTERVAL			THIRD INTERVAL			FOURTH INTERVAL			
ITEM NUMBER	CATEGORY NUMBER	DESCRIPTION	SKETCH NUMBER	IDENT. NUMBER	VOL.	SUR.	VIS.	1ST PER	2ND PER	3RD PER	1ST PER	2ND PER	3RD PER	1ST PER	2ND PER	3RD PER	1ST PER	2ND PER	3RD PER	REMARKS
C1.20	C-A		2-1320	3		X					X	/	/							REFERENCE TABLE 4.0
		TOTAL ID's for C1.20		33 *							20	16	17							

NSID COMPONENT SURVEILLANCE SCHEDULE

Effective Date 09/05/89 Process Date 03/09/90

COMPONENT: VESSEL TUBESHEET-TO-SHELL WELDS

83S	83S		INT		EXAMINATION METHODS			FIRST INTERVAL			SECOND INTERVAL			THIRD INTERVAL			FOURTH INTERVAL			
ITEM NUMBER	CATEGORY NUMBER	DESCRIPTION	SKETCH NUMBER	IDENT. NUMBER	VOL.	SUR.	VIS.	1ST PER	2ND PER	3RD PER	1ST PER	2ND PER	3RD PER	1ST PER	2ND PER	3RD PER	1ST PER	2ND PER	3RD PER	REMARKS
C1.30	C-A		2-1101	31-2	X						X	/	/							REFERENCE TABLE 4.0
C1.30	C-A		2-1101	32-2	X						X									REFERENCE TABLE 4.0
C1.30	C-A		2-1101	33-2	X						X									REFERENCE TABLE 4.0
C1.30	C-A		2-1101	34-2	X						X									REFERENCE TABLE 4.0
C1.30	C-A		2-1110	2	X															
C1.30	C-A		2-1110	3	X															
C1.30	C-A		2-1110	6	X															
C1.30	C-A		2-1110	7	X															
C1.30	C-A		2-1110	10	X						X									REFERENCE TABLE 4.0
C1.30	C-A		2-1110	11	X								/							REFERENCE TABLE 4.0
		TOTAL ID's for C1.30		10 *							5	1	2							

NSID COMPONENT SURVEILLANCE SCHEDULE

Effective Date 09/05/89 Process Date 03/09/90

COMPONENT: NOZ. TO SHELL (OR HEAD) WELDS > 1/2" NOM. THK.

83S	83S		INT		EXAMINATION METHODS			FIRST INTERVAL			SECOND INTERVAL			THIRD INTERVAL			FOURTH INTERVAL			
ITEM NUMBER	CATEGORY NUMBER	DESCRIPTION	SKETCH NUMBER	IDENT. NUMBER	VOL.	SUR.	VIS.	1ST PER	2ND PER	3RD PER	1ST PER	2ND PER	3RD PER	1ST PER	2ND PER	3RD PER	1ST PER	2ND PER	3RD PER	REMARKS
C2.21	C-B		2-1101	31-9	X						X	/								REFERENCE TABLE 4.0
				31-9		X					X	/								
C2.21	C-B		2-1101	32-9	X						X									REFERENCE TABLE 4.0
				32-9		X					X									
C2.21	C-B		2-1101	33-9	X						X									REFERENCE TABLE 4.0
				33-9		X					X									
C2.21	C-B		2-1101	34-9	X						X									REFERENCE TABLE 4.0
				34-9		X					X									
C2.21	C-B		2-1101	31-10	X						X		/							REFERENCE TABLE 4.0
				31-10		X					X		/							
C2.21	C-B		2-1101	32-10	X						X									REFERENCE TABLE 4.0
				32-10		X					X									
C2.21	C-B		2-1101	33-10	X						X									REFERENCE TABLE 4.0
				33-10		X					X									
C2.21	C-B		2-1101	34-10	X						X									REFERENCE TABLE 4.0
				34-10		X					X									
		TOTAL ID's for C2.21		8 *							8	1	1							

NSID COMPONENT SURVEILLANCE SCHEDULE

Effective Date 09/05/89 Process Date 03/09/90

COMPONENT: NOZZLE INSIDE RADIUS SECTION

83S	83S		INT		EXAMINATION METHODS			FIRST INTERVAL			SECOND INTERVAL			THIRD INTERVAL			FOURTH INTERVAL			
ITEM NUMBER	CATEGORY NUMBER	DESCRIPTION	SKETCH NUMBER	IDENT. NUMBER	VOL.	SUR.	VIS.	1ST PER	2ND PER	3RD PER	1ST PER	2ND PER	3RD PER	1ST PER	2ND PER	3RD PER	1ST PER	2ND PER	3RD PER	REMARKS
C2.22	C-B		2-1101	31-9IR	X						X	/								REFERENCE TABLE 4.0
C2.22	C-B		2-1101	32-9IR	X						X									REFERENCE TABLE 4.0
C2.22	C-B		2-1101	33-9IR	X						X									REFERENCE TABLE 4.0
C2.22	C-B		2-1101	34-9IR	X						X									REFERENCE TABLE 4.0
C2.22	C-B		2-1101	31-10IR			X				X		/							REFERENCE TABLE 4.0
C2.22	C-B		2-1101	32-10IR			X				X									REFERENCE TABLE 4.0
C2.22	C-B		2-1101	33-10IR			X				X									REFERENCE TABLE 4.0
C2.22	C-B		2-1101	34-10IR			X				X									REFERENCE TABLE 4.0
		TOTAL ID's for C2.22		8 *							8	1	1							

NSID COMPONENT SURVEILLANCE SCHEDULE

Effective Date 09/05/89 Process Date 03/09/90

COMPONENT: REINFORCING PLATE WELDS TO NOZZLE AND VESSEL

83S	83S		INT		EXAMINATION METHODS			FIRST INTERVAL			SECOND INTERVAL			THIRD INTERVAL			FOURTH INTERVAL			
ITEM NUMBER	CATEGORY NUMBER	DESCRIPTION	SKETCH NUMBER	IDENT. NUMBER	VOL.	SUR.	VIS.	1ST PER	2ND PER	3RD PER	1ST PER	2ND PER	3RD PER	1ST PER	2ND PER	3RD PER	1ST PER	2ND PER	3RD PER	REMARKS
C2.31	C-B		2-1120	31-3		X					X									REFERENCE TABLE 4.0
C2.31	C-B		2-1120	31-4		X							/							REFERENCE TABLE 4.0
C2.31	C-B		2-1120	32-3		X														
C2.31	C-B		2-1120	32-4		X														
C2.31	C-B		2-1220	5		X					X									REFERENCE TABLE 4.0
C2.31	C-B		2-1220	6		X							/							REFERENCE TABLE 4.0
		TOTAL ID's for C2.31		6 *							2		2							

NSID COMPONENT SURVEILLANCE SCHEDULE

Effective Date 09/05/89 Process Date 03/09/90

COMPONENT: NOZZLE TO SHELL (OR HEAD) VESSEL INSIDE ACCESSIBLE

83S	83S		INT		EXAMINATION METHODS			FIRST INTERVAL			SECOND INTERVAL			THIRD INTERVAL			FOURTH INTERVAL			
ITEM NUMBER	CATEGORY NUMBER	DESCRIPTION	SKETCH NUMBER	IDENT. NUMBER	VOL.	SUR.	VIS.	1ST PER	2ND PER	3RD PER	1ST PER	2ND PER	3RD PER	1ST PER	2ND PER	3RD PER	1ST PER	2ND PER	3RD PER	REMARKS
C2.33	C-B		2-1120	31-5			X						/							VT-2. REF.TABLE 4.0
C2.33	C-B		2-1120	31-6			X				/									VT-2. REF.TABLE 4.0
C2.33	C-B		2-1120	32-5			X													
C2.33	C-B		2-1120	32-6			X													
C2.33	C-B		2-1220	3			X				/									VT-2. REF.TABLE 4.0
C2.33	C-B		2-1220	4			X						/							VT-2. REF.TABLE 4.0
		TOTAL ID's for C2.33		6 *							2		2							

NSID COMPONENT SURVEILLANCE SCHEDULE

Effective Date 09/05/89 Process Date 03/09/90

COMPONENT: VESSELS INTEGRALLY WELDED ATTACHMENTS

83S	83S		INT		EXAMINATION METHODS			FIRST INTERVAL			SECOND INTERVAL			THIRD INTERVAL			FOURTH INTERVAL			
ITEM NUMBER	CATEGORY NUMBER	DESCRIPTION	SKETCH NUMBER	IDENT. NUMBER	VOL.	SUR.	VIS.	1ST PER	2ND PER	3RD PER	1ST PER	2ND PER	3RD PER	1ST PER	2ND PER	3RD PER	1ST PER	2ND PER	3RD PER	REMARKS
C3.10	C-C		2-1120	31-1WS		X					X									REFERENCE TABLE 4.0
C3.10	C-C		2-1120	31-2WS		X							/							REFERENCE TABLE 4.0
C3.10	C-C		2-1120	32-1WS		X														
C3.10	C-C		2-1120	32-2WS		X														
		TOTAL ID's for C3.10		4 *							1		1							

NSID COMPONENT SURVEILLANCE SCHEDULE

Effective Date 09/05/89 Process Date 03/09/90

COMPONENT: PIPING INTEGRALLY WELDED ATTACHMENTS

83S	83S		INT		EXAMINATION METHODS			FIRST INTERVAL			SECOND INTERVAL			THIRD INTERVAL			FOURTH INTERVAL			
ITEM NUMBER	CATEGORY NUMBER	DESCRIPTION	SKETCH NUMBER	IDENT. NUMBER	VOL.	SUR.	VIS.	1ST PER	2ND PER	3RD PER	1ST PER	2ND PER	3RD PER	1ST PER	2ND PER	3RD PER	1ST PER	2ND PER	3RD PER	REMARKS
C3.20	C-C		2-2100	PR-4		X						/								REFERENCE TABLE 4.0
C3.20	C-C		2-2100	PR-5		X						/								
C3.20	C-C		2-2100	HMS-1		X						/								
C3.20	C-C		2-2100	HMS-5		X						/								
C3.20	C-C		2-2100	HMS-13		X						/								
C3.20	C-C		2-2100	HMS-14		X						/								
C3.20	C-C		2-2100	HMS-15		X						/								
C3.20	C-C		2-2101	MSR-2		X						/								
C3.20	C-C		2-2101	MSR-4		X						/								
C3.20	C-C		2-2101	MSR-11		X							/							
C3.20	C-C		2-2101	MSR-13		X						/								
C3.20	C-C		2-2101	MSR-16		X						/								
C3.20	C-C		2-2101	MSR-17		X						/								
C3.20	C-C		2-2101	MSR-21		X						/								
C3.20	C-C		2-2101	MSR-24		X							/							
C3.20	C-C		2-2101	MSR-27		X							/							
C3.20	C-C		2-2101	MSR-29		X						/								
C3.20	C-C		2-2101	MS-R-2-1		X						/								
C3.20	C-C		2-2101	MS-A1020-1		X						/								
C3.20	C-C		2-2102	PR-4		X						/								
C3.20	C-C		2-2102	PR-5		X						/								
C3.20	C-C		2-2102	HBF-1		X						/								
C3.20	C-C		2-2102	HBF-10		X					X									
C3.20	C-C		2-2102	HBF-17		X					X									
C3.20	C-C		2-2102	HBF-18		X						/								
C3.20	C-C		2-2102	HBF-19		X							/							
C3.20	C-C		2-2102	PWR-530		X							/							
C3.20	C-C		2-2102	PWR-534		X						/								
C3.20	C-C		2-2102	PWR-536		X						/								
C3.20	C-C		2-2102	BFD-H-46		X						/								
C3.20	C-C		2-2200	PR-4		X						/								
C3.20	C-C		2-2200	PR-5		X						/								
C3.20	C-C		2-2200	HMS-2		X						/								
C3.20	C-C		2-2200	HMS-6		X						/								
C3.20	C-C		2-2200	HMS-13		X						/								
C3.20	C-C		2-2200	HMS-14		X						/								
C3.20	C-C		2-2200	HMS-15		X						/								
C3.20	C-C		2-2200	HMS-16		X						/								
C3.20	C-C		2-2201	MSR-18		X						/								

NSID COMPONENT SURVEILLANCE SCHEDULE

Effective Date 09/05/89 Process Date 03/09/90

COMPONENT: PIPING INTEGRALLY WELDED ATTACHMENTS

83S	83S		INT		EXAMINATION METHODS			FIRST INTERVAL			SECOND INTERVAL			THIRD INTERVAL			FOURTH INTERVAL			
ITEM NUMBER	CATEGORY NUMBER	DESCRIPTION	SKETCH NUMBER	IDENT. NUMBER	VOL.	SUR.	VIS.	1ST PER	2ND PER	3RD PER	1ST PER	2ND PER	3RD PER	1ST PER	2ND PER	3RD PER	1ST PER	2ND PER	3RD PER	REMARKS
C3.20	C-C		2-2201	MSR-28		X						/								
C3.20	C-C		2-2201	MS-R-1-1		X						/								
C3.20	C-C		2-2202	PR-4		X						/								
C3.20	C-C		2-2202	PR-5		X						/								
C3.20	C-C		2-2202	HBF-2		X						/								
C3.20	C-C		2-2202	HBF-9		X						/								
C3.20	C-C		2-2202	HBF-17		X						/								
C3.20	C-C		2-2202	HBF-18		X						/								
C3.20	C-C		2-2202	HBF-19		X						/								
C3.20	C-C		2-2202	PWR-537		X						/								
C3.20	C-C		2-2300	PR-1		X							/							
C3.20	C-C		2-2300	PR-2		X							/							
C3.20	C-C		2-2300	PR-3		X					X									
C3.20	C-C		2-2300	HMS-3		X							/							
C3.20	C-C		2-2300	HMS-8		X					X									
C3.20	C-C		2-2300	HMS-9		X					X									
C3.20	C-C		2-2300	HMS-10		X						/								
C3.20	C-C		2-2300	HMS-11		X						/								
C3.20	C-C		2-2300	HMS-12		X						/								
C3.20	C-C		2-2301	MSR-15		X							/							
C3.20	C-C		2-2301	MSR-20		X							/							
C3.20	C-C		2-2301	MSR-23		X							/							
C3.20	C-C		2-2301	MSR-26		X					X									
C3.20	C-C		2-2302	PR-1		X							/							
C3.20	C-C		2-2302	PR-2		X							/							
C3.20	C-C		2-2302	PR-3		X					X									
C3.20	C-C		2-2302	HBF-3		X							/							
C3.20	C-C		2-2302	HBF-11		X					X									
C3.20	C-C		2-2302	HBF-14		X							/							
C3.20	C-C		2-2302	HBF-15		X					X									
C3.20	C-C		2-2302	HBF-16		X					X									
C3.20	C-C		2-2302	PWR-539		X							/							
C3.20	C-C		2-2302	BFD-H-43		X							/							
C3.20	C-C		2-2400	PR-1		X							/							
C3.20	C-C		2-2400	PR-2		X							/							
C3.20	C-C		2-2400	PR-3		X					X									
C3.20	C-C		2-2400	HMS-4		X							/							
C3.20	C-C		2-2400	HMS-7		X					X									

NSID COMPONENT SURVEILLANCE SCHEDULE

Effective Date 09/05/89 Process Date 03/09/90

COMPONENT: PIPING INTEGRALLY WELDED ATTACHMENTS

83S	83S		INT		EXAMINATION METHODS			FIRST INTERVAL			SECOND INTERVAL			THIRD INTERVAL			FOURTH INTERVAL			
ITEM NUMBER	CATEGORY NUMBER	DESCRIPTION	SKETCH NUMBER	IDENT. NUMBER	VOL.	SUR.	VIS.	1ST PER	2ND PER	3RD PER	1ST PER	2ND PER	3RD PER	1ST PER	2ND PER	3RD PER	1ST PER	2ND PER	3RD PER	REMARKS
C3.20	C-C		2-2400	HMS-9		X					X									
C3.20	C-C		2-2400	HMS-10		X							/							
C3.20	C-C		2-2400	HMS-11		X							/							
C3.20	C-C		2-2400	HMS-12		X							/							
C3.20	C-C		2-2400	HMS-19		X							/							
C3.20	C-C		2-2401	MSR-19		X					X									
C3.20	C-C		2-2401	MSR-25		X							/							
C3.20	C-C		2-2402	PR-1		X							/							
C3.20	C-C		2-2402	PR-2		X							/							
C3.20	C-C		2-2402	PR-3		X					X									
C3.20	C-C		2-2402	HBF-4		X							/							
C3.20	C-C		2-2402	HBF-12		X					X									
C3.20	C-C		2-2402	HBF-13		X					X									
C3.20	C-C		2-2402	HBF-14		X							/							
C3.20	C-C		2-2402	HBF-15		X							/							
C3.20	C-C		2-2402	HBF-16		X					X									
C3.20	C-C		2-2402	PWR-265		X							/							
C3.20	C-C		2-2402	PWR-538		X							/							
C3.20	C-C		2-2511	AC-H-9-3		X							/							
C3.20	C-C		2-2511	AC-H-9-12		X							/							
C3.20	C-C		2-2512	AC-H-215		X						/								
C3.20	C-C		2-2521	PWR-142		X						/								
C3.20	C-C		2-2521	PWR-144		X						/								
C3.20	C-C		2-2523	PWR-148A		X							/							
C3.20	C-C		2-2523	SIHR353-2B		X							/							
C3.20	C-C		2-2543	SI-HR550-4		X							/							
C3.20	C-C		2-2543	SI-HR550-7		X							/							
		TOTAL ID's for C3.20		104 *							18	48	38							

NSID COMPONENT SURVEILLANCE SCHEDULE

Effective Date 09/05/89 Process Date 03/09/90

COMPONENT: PUMP BOLTS AND STUDS

83S	83S		INT		EXAMINATION METHODS			FIRST INTERVAL			SECOND INTERVAL			THIRD INTERVAL			FOURTH INTERVAL			
ITEM NUMBER	CATEGORY NUMBER	DESCRIPTION	SKETCH NUMBER	IDENT. NUMBER	VOL.	SUR.	VIS.	1ST PER	2ND PER	3RD PER	1ST PER	2ND PER	3RD PER	1ST PER	2ND PER	3RD PER	1ST PER	2ND PER	3RD PER	REMARKS
C4.30	C-D		2-3130	31-B01	X							/								31-B01 & 31-B02 DEFERED UNTIL 2ND PERIOD.
C4.30	C-D		2-3130	31-B02	X							/								
C4.30	C-D		2-3130	31-B03	X							/								
C4.30	C-D		2-3130	31-B04	X							/								
C4.30	C-D		2-3130	31-B05	X								/							
C4.30	C-D		2-3130	31-B06	X								/							
C4.30	C-D		2-3130	31-B07	X								/							
C4.30	C-D		2-3130	31-B11	X								/							
C4.30	C-D		2-3130	32-B01	X															
C4.30	C-D		2-3130	32-B02	X															
C4.30	C-D		2-3130	32-B03	X															
C4.30	C-D		2-3130	32-B04	X															
C4.30	C-D		2-3130	32-B05	X															
C4.30	C-D		2-3130	32-B06	X															
C4.30	C-D		2-3130	32-B07	X															
C4.30	C-D		2-3130	32-B11	X															
C4.30	C-D		2-3130	33-B01	X															
C4.30	C-D		2-3130	33-B02	X															
C4.30	C-D		2-3130	33-B03	X															
C4.30	C-D		2-3130	33-B04	X															
C4.30	C-D		2-3130	33-B05	X															
C4.30	C-D		2-3130	33-B06	X															
C4.30	C-D		2-3130	33-B07	X															
C4.30	C-D		2-3130	33-B11	X															
		TOTAL ID's for C4.30		24 *								4	4							

NSID COMPONENT SURVEILLANCE SCHEDULE

Effective Date 09/05/89 Process Date 03/09/90

COMPONENT: CIRC. PIPE WELDS < OR EQUAL TO 1/2" NWT

83S	83S		INT		EXAMINATION METHODS			FIRST INTERVAL			SECOND INTERVAL			THIRD INTERVAL			FOURTH INTERVAL			
ITEM NUMBER	CATEGORY NUMBER	DESCRIPTION	SKETCH NUMBER	IDENT. NUMBER	VOL.	SUR.	VIS.	1ST PER	2ND PER	3RD PER	1ST PER	2ND PER	3RD PER	1ST PER	2ND PER	3RD PER	1ST PER	2ND PER	3RD PER	REMARKS
C5.11	C-F		2-2101	24		X														REFERENCE TABLE 4.0
C5.11	C-F		2-2101	25		X														
C5.11	C-F		2-2101	26		X														
C5.11	C-F		2-2101	27		X														
C5.11	C-F		2-2101	28		X														
C5.11	C-F		2-2101	29		X														
C5.11	C-F		2-2101	30		X					X									
C5.11	C-F		2-2201	20		X														
C5.11	C-F		2-2201	21		X														
C5.11	C-F		2-2201	22		X														
C5.11	C-F		2-2201	23		X														
C5.11	C-F		2-2201	24		X														
C5.11	C-F		2-2201	25		X														
C5.11	C-F		2-2201	26		X														
C5.11	C-F		2-2301	24		X														
C5.11	C-F		2-2301	25		X														
C5.11	C-F		2-2301	26		X							/							
C5.11	C-F		2-2301	27		X							/							
C5.11	C-F		2-2301	28		X														
C5.11	C-F		2-2301	29		X														
C5.11	C-F		2-2301	30		X														
C5.11	C-F		2-2401	20		X														
C5.11	C-F		2-2401	21		X														
C5.11	C-F		2-2401	22		X														
C5.11	C-F		2-2401	23		X														
C5.11	C-F		2-2401	24		X														
C5.11	C-F		2-2401	25		X														
C5.11	C-F		2-2401	26		X														
C5.11	C-F		2-2500	1		X														
C5.11	C-F		2-2500	2		X														
C5.11	C-F		2-2500	3		X														
C5.11	C-F		2-2500	4		X														
C5.11	C-F		2-2500	5		X														
C5.11	C-F		2-2500	6		X														
C5.11	C-F		2-2500	7		X					X									
C5.11	C-F		2-2500	8		X					X									
C5.11	C-F		2-2500	9		X														
C5.11	C-F		2-2500	10		X														
C5.11	C-F		2-2500	11		X														

NUCLEAR ENERGY SYSTEMS
FORM D037 08/25/87 Westinghouse Proprietary

NSID COMPONENT SURVEILLANCE SCHEDULE

Effective Date 09/05/89 Process Date 03/09/90

COMPONENT: CIRC. PIPE WELDS < OR EQUAL TO 1/2" NWT

83S	83S		INT		EXAMINATION METHODS			FIRST INTERVAL			SECOND INTERVAL			THIRD INTERVAL			FOURTH INTERVAL			
ITEM NUMBER	CATEGORY NUMBER	DESCRIPTION	SKETCH NUMBER	IDENT. NUMBER	VOL.	SUR.	VIS.	1ST PER	2ND PER	3RD PER	1ST PER	2ND PER	3RD PER	1ST PER	2ND PER	3RD PER	1ST PER	2ND PER	3RD PER	REMARKS
C5.11	C-F		2-2500	12		X														
C5.11	C-F		2-2500	13		X					X									
C5.11	C-F		2-2500	14		X														
C5.11	C-F		2-2500	15		X														
C5.11	C-F		2-2500	16		X														
C5.11	C-F		2-2500	17		X														
C5.11	C-F		2-2500	18		X														
C5.11	C-F		2-2500	19		X					X									
C5.11	C-F		2-2500	20		X					X									
C5.11	C-F		2-2500	21		X														
C5.11	C-F		2-2500	22		X														
C5.11	C-F		2-2500	23		X														
C5.11	C-F		2-2500	24		X														
C5.11	C-F		2-2500	25		X							/							
C5.11	C-F		2-2500	26		X							/							
C5.11	C-F		2-2500	27		X							/							
C5.11	C-F		2-2500	28		X						/								
C5.11	C-F		2-2500	29		X														
C5.11	C-F		2-2500	30		X														
C5.11	C-F		2-2500	31		X														
C5.11	C-F		2-2500	32		X														
C5.11	C-F		2-2500	33		X						/								
C5.11	C-F		2-2500	34		X						/								
C5.11	C-F		2-2500	35		X						/								
C5.11	C-F		2-2500	36		X														
C5.11	C-F		2-2500	37		X														
C5.11	C-F		2-2500	38		X														
C5.11	C-F		2-2500	39		X														
C5.11	C-F		2-2500	40		X														
C5.11	C-F		2-2500	41		X														
C5.11	C-F		2-2500	42		X														
C5.11	C-F		2-2500	43		X														
C5.11	C-F		2-2500	44		X						/								
C5.11	C-F		2-2500	45		X						/								
C5.11	C-F		2-2500	46		X														
C5.11	C-F		2-2500	47		X														
C5.11	C-F		2-2500	48		X														
C5.11	C-F		2-2500	49		X														
C5.11	C-F		2-2500	50		X														
C5.11	C-F		2-2500	51		X														
C5.11	C-F		2-2500	52		X														
C5.11	C-F		2-2500	65		X														
C5.11	C-F		2-2500	66		X														

NSID COMPONENT SURVEILLANCE SCHEDULE

Effective Date 09/05/89 Process Date 03/09/90

COMPONENT: CIRC. PIPE WELDS < OR EQUAL TO 1/2" NWT

83S	83S		INT		EXAMINATION METHODS			FIRST INTERVAL			SECOND INTERVAL			THIRD INTERVAL			FOURTH INTERVAL			
ITEM NUMBER	CATEGORY NUMBER	DESCRIPTION	SKETCH NUMBER	IDENT. NUMBER	VOL.	SUR.	VIS.	1ST PER	2ND PER	3RD PER	1ST PER	2ND PER	3RD PER	1ST PER	2ND PER	3RD PER	1ST PER	2ND PER	3RD PER	REMARKS
C5.11	C-F		2-2500	67		X														
C5.11	C-F		2-2500	68		X														
C5.11	C-F		2-2500	74		X														
C5.11	C-F		2-2500	75		X														
C5.11	C-F		2-2500	76		X														
C5.11	C-F		2-2500	77		X														
C5.11	C-F		2-2510	1		X														
C5.11	C-F		2-2510	2		X														
C5.11	C-F		2-2510	3		X														
C5.11	C-F		2-2510	4		X														
C5.11	C-F		2-2510	5		X														
C5.11	C-F		2-2510	6		X														
C5.11	C-F		2-2510	7		X														
C5.11	C-F		2-2510	8		X														
C5.11	C-F		2-2510	9		X														
C5.11	C-F		2-2510	10		X														
C5.11	C-F		2-2510	11		X														
C5.11	C-F		2-2510	12		X														
C5.11	C-F		2-2510	13		X														
C5.11	C-F		2-2510	14		X														
C5.11	C-F		2-2510	15		X														
C5.11	C-F		2-2510	16		X														
C5.11	C-F		2-2510	17		X														
C5.11	C-F		2-2510	18		X														
C5.11	C-F		2-2510	19		X														
C5.11	C-F		2-2510	20		X														
C5.11	C-F		2-2510	21		X														
C5.11	C-F		2-2510	22		X														
C5.11	C-F		2-2510	23		X														
C5.11	C-F		2-2510	24		X														
C5.11	C-F		2-2510	25		X														
C5.11	C-F		2-2510	26		X														
C5.11	C-F		2-2510	27		X														
C5.11	C-F		2-2510	28		X					X									
C5.11	C-F		2-2510	29		X					X									
C5.11	C-F		2-2510	30		X														
C5.11	C-F		2-2510	31		X														
C5.11	C-F		2-2510	32		X														
C5.11	C-F		2-2510	33		X														
C5.11	C-F		2-2510	34		X					X									
C5.11	C-F		2-2510	35		X					X									
C5.11	C-F		2-2510	36		X														

NSID COMPONENT SURVEILLANCE SCHEDULE

Effective Date 09/05/89 Process Date 03/09/90

COMPONENT: CIRC. PIPE WELDS < OR EQUAL TO 1/2" NWT

83S	83S		INT		EXAMINATION METHODS			FIRST INTERVAL			SECOND INTERVAL			THIRD INTERVAL			FOURTH INTERVAL			
ITEM NUMBER	CATEGORY NUMBER	DESCRIPTION	SKETCH NUMBER	IDENT. NUMBER	VOL.	SUR.	VIS.	1ST PER	2ND PER	3RD PER	1ST PER	2ND PER	3RD PER	1ST PER	2ND PER	3RD PER	1ST PER	2ND PER	3RD PER	REMARKS
C5.11	C-F		2-2510	37		X														
C5.11	C-F		2-2511	1		X														
C5.11	C-F		2-2511	2		X														
C5.11	C-F		2-2511	3		X														
C5.11	C-F		2-2511	4		X														
C5.11	C-F		2-2511	5		X														
C5.11	C-F		2-2511	6		X					X									
C5.11	C-F		2-2511	7		X					X									
C5.11	C-F		2-2511	8		X					X									
C5.11	C-F		2-2511	9		X					X									
C5.11	C-F		2-2511	10		X														
C5.11	C-F		2-2511	11		X														
C5.11	C-F		2-2511	12		X														
C5.11	C-F		2-2511	13		X														
C5.11	C-F		2-2511	14		X														
C5.11	C-F		2-2511	15		X														
C5.11	C-F		2-2511	16		X														
C5.11	C-F		2-2511	17		X														
C5.11	C-F		2-2511	18		X														
C5.11	C-F		2-2511	19		X														
C5.11	C-F		2-2511	20		X														
C5.11	C-F		2-2511	21		X														
C5.11	C-F		2-2511	22		X						/								
C5.11	C-F		2-2511	23		X														
C5.11	C-F		2-2511	24		X						/								
C5.11	C-F		2-2511	25		X						/								
C5.11	C-F		2-2511	26		X														
C5.11	C-F		2-2511	27		X														
C5.11	C-F		2-2511	28		X														
C5.11	C-F		2-2511	29		X														
C5.11	C-F		2-2511	30		X														
C5.11	C-F		2-2511	31		X														
C5.11	C-F		2-2511	32		X														
C5.11	C-F		2-2511	33		X														
C5.11	C-F		2-2512	1		X														
C5.11	C-F		2-2512	2		X														
C5.11	C-F		2-2512	3		X														
C5.11	C-F		2-2512	4		X														
C5.11	C-F		2-2512	5		X														
C5.11	C-F		2-2512	6		X					X									
C5.11	C-F		2-2512	7		X					X									

NSID COMPONENT SURVEILLANCE SCHEDULE

Effective Date 09/05/89 Process Date 03/09/90

COMPONENT: CIRC. PIPE WELDS < OR EQUAL TO 1/2" NWT

83S	83S		INT		EXAMINATION METHODS			FIRST INTERVAL			SECOND INTERVAL			THIRD INTERVAL			FOURTH INTERVAL			
ITEM NUMBER	CATEGORY NUMBER	DESCRIPTION	SKETCH NUMBER	IDENT. NUMBER	VOL.	SUR.	VIS.	1ST PER	2ND PER	3RD PER	1ST PER	2ND PER	3RD PER	1ST PER	2ND PER	3RD PER	1ST PER	2ND PER	3RD PER	REMARKS
C5.11	C-F		2-2512	8		X														
C5.11	C-F		2-2512	9		X														
C5.11	C-F		2-2512	10		X						/								
C5.11	C-F		2-2512	11		X														
C5.11	C-F		2-2512	12		X														
C5.11	C-F		2-2512	13		X														
C5.11	C-F		2-2512	14		X														
C5.11	C-F		2-2512	15		X														
C5.11	C-F		2-2512	16		X														
C5.11	C-F		2-2512	17		X														
C5.11	C-F		2-2512	18		X														
C5.11	C-F		2-2512	19		X														
C5.11	C-F		2-2512	20		X														
C5.11	C-F		2-2512	21		X														
C5.11	C-F		2-2512	22		X							/							
C5.11	C-F		2-2512	23		X							/							
C5.11	C-F		2-2512	24		X														
C5.11	C-F		2-2512	25		X														
C5.11	C-F		2-2512	26		X														
C5.11	C-F		2-2512	27		X														
C5.11	C-F		2-2512	28		X														
C5.11	C-F		2-2512	29		X														
C5.11	C-F		2-2512	30		X														
C5.11	C-F		2-2512	31		X						/								
C5.11	C-F		2-2512	32		X						/								
C5.11	C-F		2-2512	33		X														
C5.11	C-F		2-2512	34		X														
C5.11	C-F		2-2512	35		X														
C5.11	C-F		2-2520	1		X														
C5.11	C-F		2-2520	2		X					X									
C5.11	C-F		2-2520	3		X					X									
C5.11	C-F		2-2520	4		X														
C5.11	C-F		2-2520	5		X														
C5.11	C-F		2-2520	6		X														
C5.11	C-F		2-2520	7		X														
C5.11	C-F		2-2520	8		X														
C5.11	C-F		2-2520	9		X														
C5.11	C-F		2-2520	10		X														
C5.11	C-F		2-2520	11		X														
C5.11	C-F		2-2520	12		X														
C5.11	C-F		2-2520	13		X														
C5.11	C-F		2-2520	14		X														

NSID COMPONENT SURVEILLANCE SCHEDULE

Effective Date 09/05/89 Process Date 03/09/90

COMPONENT: CIRC. PIPE WELDS < OR EQUAL TO 1/2" NWT

83S	83S		INT		EXAMINATION METHODS			FIRST INTERVAL			SECOND INTERVAL			THIRD INTERVAL			FOURTH INTERVAL			
ITEM NUMBER	CATEGORY NUMBER	DESCRIPTION	SKETCH NUMBER	IDENT. NUMBER	VOL.	SUR.	VIS.	1ST PER	2ND PER	3RD PER	1ST PER	2ND PER	3RD PER	1ST PER	2ND PER	3RD PER	1ST PER	2ND PER	3RD PER	REMARKS
C5.11	C-F		2-2520	15		X														
C5.11	C-F		2-2520	16		X														
C5.11	C-F		2-2520	17		X						/								
C5.11	C-F		2-2520	18		X						/								
C5.11	C-F		2-2520	19		X														
C5.11	C-F		2-2520	20		X														
C5.11	C-F		2-2520	21		X														
C5.11	C-F		2-2520	22		X							/							
C5.11	C-F		2-2520	23		X							/							
C5.11	C-F		2-2520	24		X														
C5.11	C-F		2-2520	25		X														
C5.11	C-F		2-2520	26		X							/							
C5.11	C-F		2-2520	27		X							/							
C5.11	C-F		2-2521	4		X						/								
C5.11	C-F		2-2521	5		X						/								
C5.11	C-F		2-2521	6		X						/								
C5.11	C-F		2-2521	7		X														
C5.11	C-F		2-2521	8		X														
C5.11	C-F		2-2521	9		X														
C5.11	C-F		2-2521	10		X														
C5.11	C-F		2-2521	11		X														
C5.11	C-F		2-2521	12		X														
C5.11	C-F		2-2521	13		X														
C5.11	C-F		2-2521	14		X														
C5.11	C-F		2-2521	15		X														
C5.11	C-F		2-2521	16		X														
C5.11	C-F		2-2521	17		X														
C5.11	C-F		2-2521	18		X														
C5.11	C-F		2-2521	19		X														
C5.11	C-F		2-2521	20		X														
C5.11	C-F		2-2521	21		X														
C5.11	C-F		2-2521	22		X														
C5.11	C-F		2-2521	23		X														
C5.11	C-F		2-2521	24		X														
C5.11	C-F		2-2521	25		X														
C5.11	C-F		2-2521	26		X														
C5.11	C-F		2-2521	27		X														
C5.11	C-F		2-2522	5		X					X									
C5.11	C-F		2-2522	6		X					X									
C5.11	C-F		2-2522	7		X							/							
C5.11	C-F		2-2522	8		X							/							

NSID COMPONENT SURVEILLANCE SCHEDULE

Effective Date 09/05/89 Process Date 03/09/90

COMPONENT: CIRC. PIPE WELDS < OR EQUAL TO 1/2" NWT

83S	83S		INT		EXAMINATION METHODS			FIRST INTERVAL			SECOND INTERVAL			THIRD INTERVAL			FOURTH INTERVAL			
ITEM NUMBER	CATEGORY NUMBER	DESCRIPTION	SKETCH NUMBER	IDENT. NUMBER	VOL.	SUR.	VIS.	1ST PER	2ND PER	3RD PER	1ST PER	2ND PER	3RD PER	1ST PER	2ND PER	3RD PER	1ST PER	2ND PER	3RD PER	REMARKS
C5.11	C-F		2-2522	9		X														
C5.11	C-F		2-2523	2		X														
C5.11	C-F		2-2523	3		X														
C5.11	C-F		2-2524	3		X							/							
C5.11	C-F		2-2524	4		X							/							
C5.11	C-F		2-2524	5		X														
C5.11	C-F		2-2524	6		X														
C5.11	C-F		2-2524	7		X														
C5.11	C-F		2-2524	8		X														
C5.11	C-F		2-2524	9		X														
C5.11	C-F		2-2530	1		X														
C5.11	C-F		2-2530	2		X														
C5.11	C-F		2-2530	3		X														
C5.11	C-F		2-2530	4		X														
C5.11	C-F		2-2530	5		X														
C5.11	C-F		2-2530	6		X														
C5.11	C-F		2-2530	7		X														
C5.11	C-F		2-2530	8		X														
C5.11	C-F		2-2530	9		X														
C5.11	C-F		2-2530	10		X														
C5.11	C-F		2-2530	11		X														
C5.11	C-F		2-2530	12		X														
C5.11	C-F		2-2530	13		X														
C5.11	C-F		2-2530	14		X														
C5.11	C-F		2-2530	15		X														
C5.11	C-F		2-2530	16		X						/								
C5.11	C-F		2-2530	17		X														
C5.11	C-F		2-2530	18		X														
C5.11	C-F		2-2530	19		X														
C5.11	C-F		2-2530	20		X						/								
C5.11	C-F		2-2530	21		X														
C5.11	C-F		2-2530	22		X														
C5.11	C-F		2-2530	23		X							/							
C5.11	C-F		2-2530	24		X							/							
C5.11	C-F		2-2530	25		X														
C5.11	C-F		2-2530	26		X														
C5.11	C-F		2-2530	27		X						/								
C5.11	C-F		2-2530	28		X						/								
C5.11	C-F		2-2530	29		X						/								
C5.11	C-F		2-2530	30		X														

NSID COMPONENT SURVEILLANCE SCHEDULE

Effective Date 09/05/89 Process Date 03/09/90

COMPONENT: CIRC. PIPE WELDS < OR EQUAL TO 1/2" NWT

83S	83S		INT		EXAMINATION METHODS			FIRST INTERVAL			SECOND INTERVAL			THIRD INTERVAL			FOURTH INTERVAL			
ITEM NUMBER	CATEGORY NUMBER	DESCRIPTION	SKETCH NUMBER	IDENT. NUMBER	VOL.	SUR.	VIS.	1ST PER	2ND PER	3RD PER	1ST PER	2ND PER	3RD PER	1ST PER	2ND PER	3RD PER	1ST PER	2ND PER	3RD PER	REMARKS
C5.11	C-F		2-2530	31		X														
C5.11	C-F		2-2530	32		X														
C5.11	C-F		2-2530	33		X														
C5.11	C-F		2-2530	34		X														
C5.11	C-F		2-2530	35		X					X									
C5.11	C-F		2-2530	36		X					X									
C5.11	C-F		2-2530	37		X					X									
C5.11	C-F		2-2530	38		X														
C5.11	C-F		2-2530	39		X														
C5.11	C-F		2-2530	40		X														
C5.11	C-F		2-2530	41		X														
C5.11	C-F		2-2530	42		X														
C5.11	C-F		2-2530	43		X														
C5.11	C-F		2-2530	44		X														
C5.11	C-F		2-2530	45		X														
C5.11	C-F		2-2530	46		X														
C5.11	C-F		2-2530	47		X														
C5.11	C-F		2-2530	48		X														
C5.11	C-F		2-2530	49		X														
C5.11	C-F		2-2530	50		X							/							
C5.11	C-F		2-2530	51		X							/							
C5.11	C-F		2-2530	52		X														
C5.11	C-F		2-2530	53		X														
C5.11	C-F		2-2530	54		X														
C5.11	C-F		2-2530	55		X														
C5.11	C-F		2-2530	56		X														
C5.11	C-F		2-2530	57		X														
C5.11	C-F		2-2530	58		X														
C5.11	C-F		2-2530	59		X														
C5.11	C-F		2-2531	23		X														
C5.11	C-F		2-2531	24		X							/							
C5.11	C-F		2-2531	25		X							/							
C5.11	C-F		2-2531	26		X														
C5.11	C-F		2-2531	27		X														
C5.11	C-F		2-2532	18		X														
C5.11	C-F		2-2532	20		X														
C5.11	C-F		2-2532	21		X														
C5.11	C-F		2-2532	22		X							/							
C5.11	C-F		2-2532	23		X							/							
C5.11	C-F		2-2532	24		X														
C5.11	C-F		2-2532	25		X														

NSID COMPONENT SURVEILLANCE SCHEDULE

Effective Date 09/05/89 Process Date 03/09/90

COMPONENT: CIRC. PIPE WELDS < OR EQUAL TO 1/2" NWT

83S	83S		INT		EXAMINATION METHODS			FIRST INTERVAL			SECOND INTERVAL			THIRD INTERVAL			FOURTH INTERVAL			
ITEM NUMBER	CATEGORY NUMBER	DESCRIPTION	SKETCH NUMBER	IDENT. NUMBER	VOL.	SUR.	VIS.	1ST PER	2ND PER	3RD PER	1ST PER	2ND PER	3RD PER	1ST PER	2ND PER	3RD PER	1ST PER	2ND PER	3RD PER	REMARKS
C5.11	C-F		2-2540	1		X														
C5.11	C-F		2-2540	2		X														
C5.11	C-F		2-2540	3		X														
C5.11	C-F		2-2540	4		X														
C5.11	C-F		2-2540	5		X														
C5.11	C-F		2-2540	6		X														
C5.11	C-F		2-2540	7		X														
C5.11	C-F		2-2540	8		X														
C5.11	C-F		2-2540	9		X														
C5.11	C-F		2-2540	10		X														
C5.11	C-F		2-2540	11		X														
C5.11	C-F		2-2540	12		X														
C5.11	C-F		2-2540	13		X														
C5.11	C-F		2-2540	14		X						/								
C5.11	C-F		2-2540	15		X						/								
C5.11	C-F		2-2540	16		X						/								
C5.11	C-F		2-2540	17		X														
C5.11	C-F		2-2540	18		X														
C5.11	C-F		2-2540	19		X														
C5.11	C-F		2-2540	20		X														
C5.11	C-F		2-2540	21		X														
C5.11	C-F		2-2540	22		X														
C5.11	C-F		2-2540	23		X														
C5.11	C-F		2-2540	24		X														
C5.11	C-F		2-2540	25		X														
C5.11	C-F		2-2540	26		X														
C5.11	C-F		2-2540	27		X														
C5.11	C-F		2-2540	28		X														
C5.11	C-F		2-2540	29		X														
C5.11	C-F		2-2540	30		X						/								
C5.11	C-F		2-2540	31		X						/								
C5.11	C-F		2-2540	32		X					X									
C5.11	C-F		2-2540	33		X					X									
C5.11	C-F		2-2540	34		X					X									
C5.11	C-F		2-2540	35		X					X									
C5.11	C-F		2-2543	1		X														
C5.11	C-F		2-2543	2		X														
C5.11	C-F		2-2543	3		X														
C5.11	C-F		2-2543	4		X														
C5.11	C-F		2-2543	5		X														
C5.11	C-F		2-2543	6		X														
C5.11	C-F		2-2543	7		X														

NSID COMPONENT SURVEILLANCE SCHEDULE

Effective Date 09/05/89 Process Date 03/09/90

COMPONENT: CIRC. PIPE WELDS < OR EQUAL TO 1/2" NWT

83S	83S		INT		EXAMINATION METHODS			FIRST INTERVAL			SECOND INTERVAL			THIRD INTERVAL			FOURTH INTERVAL			
ITEM NUMBER	CATEGORY NUMBER	DESCRIPTION	SKETCH NUMBER	IDENT. NUMBER	VOL.	SUR.	VIS.	1ST PER	2ND PER	3RD PER	1ST PER	2ND PER	3RD PER	1ST PER	2ND PER	3RD PER	1ST PER	2ND PER	3RD PER	REMARKS
C5.11	C-F		2-2543	8		X														
C5.11	C-F		2-2543	9		X														
C5.11	C-F		2-2543	10		X														
C5.11	C-F		2-2543	11		X														
C5.11	C-F		2-2543	12		X														
C5.11	C-F		2-2543	13		X							/							
C5.11	C-F		2-2543	14		X							/							
C5.11	C-F		2-2543	15		X							/							
C5.11	C-F		2-2543	16		X							/							
C5.11	C-F		2-2543	17		X														
C5.11	C-F		2-2543	18		X														
C5.11	C-F		2-2543	19		X														
C5.11	C-F		2-2543	20		X														
C5.11	C-F		2-2543	21		X														
C5.11	C-F		2-2543	22		X														
C5.11	C-F		2-2543	23		X														
		TOTAL ID's for C5.11		387 *							27	27	27							

NSID COMPONENT SURVEILLANCE SCHEDULE

Effective Date 09/05/89 Process Date 03/09/90

COMPONENT: LONG. PIPE WELDS < OR EQUAL TO 1/2" NWT

83S	83S		INT		EXAMINATION METHODS			FIRST INTERVAL			SECOND INTERVAL			THIRD INTERVAL			FOURTH INTERVAL			
ITEM NUMBER	CATEGORY NUMBER	DESCRIPTION	SKETCH NUMBER	IDENT. NUMBER	VOL.	SUR.	VIS.	1ST PER	2ND PER	3RD PER	1ST PER	2ND PER	3RD PER	1ST PER	2ND PER	3RD PER	1ST PER	2ND PER	3RD PER	REMARKS
C5.12	C-F		2-2500	53LS		X														REFERENCE TABLE 4.0
C5.12	C-F		2-2500	54LS		X														
C5.12	C-F		2-2500	55LS		X														
C5.12	C-F		2-2500	56LS		X														
C5.12	C-F		2-2500	57LS		X														
C5.12	C-F		2-2500	58LS		X														
C5.12	C-F		2-2500	59LS		X														
C5.12	C-F		2-2500	60LS		X														
C5.12	C-F		2-2500	61LS		X					X									
C5.12	C-F		2-2500	62LS		X					X									
C5.12	C-F		2-2500	63LS		X														
C5.12	C-F		2-2500	64LS		X														
C5.12	C-F		2-2500	69LS		X														
C5.12	C-F		2-2500	70LS		X														
C5.12	C-F		2-2500	71LS		X							/							
C5.12	C-F		2-2500	72LS		X							/							
C5.12	C-F		2-2500	73LS		X														
C5.12	C-F		2-2500	74LS		X														
C5.12	C-F		2-2510	38LS		X														
C5.12	C-F		2-2510	39LS		X														
C5.12	C-F		2-2510	40LS		X														
C5.12	C-F		2-2511	34LS		X						/								
C5.12	C-F		2-2511	35LS		X						/								
C5.12	C-F		2-2511	36LS		X														
		TOTAL ID's for C5.12		24 *							2	2	2							

NSID COMPONENT SURVEILLANCE SCHEDULE

Effective Date 09/05/89 Process Date 03/09/90

COMPONENT: CIRC. PIPE WELDS > 1/2" NWT

83S	83S		INT		EXAMINATION METHODS			FIRST INTERVAL			SECOND INTERVAL			THIRD INTERVAL			FOURTH INTERVAL			
ITEM NUMBER	CATEGORY NUMBER	DESCRIPTION	SKETCH NUMBER	IDENT. NUMBER	VOL.	SUR.	VIS.	1ST PER	2ND PER	3RD PER	1ST PER	2ND PER	3RD PER	1ST PER	2ND PER	3RD PER	1ST PER	2ND PER	3RD PER	REMARKS
C5.21	C-F		2-2100	1	X															REFERENCE TABLE 4.0
				1		X														
C5.21	C-F		2-2100	2	X															
				2		X														
C5.21	C-F		2-2100	3	X															
				3		X														
C5.21	C-F		2-2100	5	X															
				5		X														
C5.21	C-F		2-2100	6	X															
				6		X														
C5.21	C-F		2-2100	7	X															
				7		X														
C5.21	C-F		2-2100	8	X															
				8		X														
C5.21	C-F		2-2100	9	X															
				9		X														
C5.21	C-F		2-2100	10	X							/								
				10		X						/								
C5.21	C-F		2-2100	11	X							/								
				11		X						/								
C5.21	C-F		2-2101	1	X															
				1		X														
C5.21	C-F		2-2101	3	X															
				3		X														
C5.21	C-F		2-2101	4	X															
				4		X														
C5.21	C-F		2-2101	5	X															
				5		X														
C5.21	C-F		2-2101	6	X															
				6		X														
C5.21	C-F		2-2101	8	X						X									
				8		X					X									
C5.21	C-F		2-2101	9	X															
				9		X														
C5.21	C-F		2-2101	11	X															
				11		X														
C5.21	C-F		2-2101	12	X															
				12		X														
C5.21	C-F		2-2101	14	X															
				14		X														
C5.21	C-F		2-2101	15	X															
				15		X														

NSID COMPONENT SURVEILLANCE SCHEDULE

Effective Date 09/05/89 Process Date 03/09/90

COMPONENT: CIRC. PIPE WELDS > 1/2" NWT

83S	83S		INT		EXAMINATION METHODS			FIRST INTERVAL			SECOND INTERVAL			THIRD INTERVAL			FOURTH INTERVAL			
ITEM NUMBER	CATEGORY NUMBER	DESCRIPTION	SKETCH NUMBER	IDENT. NUMBER	VOL.	SUR.	VIS.	1ST PER	2ND PER	3RD PER	1ST PER	2ND PER	3RD PER	1ST PER	2ND PER	3RD PER	1ST PER	2ND PER	3RD PER	REMARKS
C5.21	C-F		2-2101	17	X															
				17		X														
C5.21	C-F		2-2101	18	X															
				18		X														
C5.21	C-F		2-2101	20	X															
				20		X														
C5.21	C-F		2-2101	21	X															
				21		X														
C5.21	C-F		2-2101	23	X															
				23		X														
C5.21	C-F		2-2101	31	X															
				31		X														
C5.21	C-F		2-2101	32	X															
				32		X														
C5.21	C-F		2-2101	33	X															
				33		X														
C5.21	C-F		2-2101	34	X															
				34		X														
C5.21	C-F		2-2102	1	X															
				1		X														
C5.21	C-F		2-2102	2	X						X									
				2		X					X									
C5.21	C-F		2-2102	3	X						X									
				3		X					X									
C5.21	C-F		2-2102	4	X															
				4		X														
C5.21	C-F		2-2102	5	X															
				5		X														
C5.21	C-F		2-2102	6	X															
				6		X														
C5.21	C-F		2-2102	7	X															
				7		X														
C5.21	C-F		2-2102	8	X															
				8		X														
C5.21	C-F		2-2102	9	X															
				9		X														
C5.21	C-F		2-2102	10	X							/								
				10		X						/								
C5.21	C-F		2-2102	11	X							/								
				11		X						/								
C5.21	C-F		2-2102	12	X															
				12		X														

NSID COMPONENT SURVEILLANCE SCHEDULE

Effective Date 09/05/89 Process Date 03/09/90

COMPONENT: CIRC. PIPE WELDS > 1/2" NWT

83S	83S		INT		EXAMINATION METHODS			FIRST INTERVAL			SECOND INTERVAL			THIRD INTERVAL			FOURTH INTERVAL			
ITEM NUMBER	CATEGORY NUMBER	DESCRIPTION	SKETCH NUMBER	IDENT. NUMBER	VOL.	SUR.	VIS.	1ST PER	2ND PER	3RD PER	1ST PER	2ND PER	3RD PER	1ST PER	2ND PER	3RD PER	1ST PER	2ND PER	3RD PER	REMARKS
C5.21	C-F		2-2102	13	X															
				13		X														
C5.21	C-F		2-2102	14	X															
				14		X														
C5.21	C-F		2-2102	15	X															
				15		X														
C5.21	C-F		2-2200	1	X															
				1		X														
C5.21	C-F		2-2200	2	X															
				2		X														
C5.21	C-F		2-2200	3	X															
				3		X														
C5.21	C-F		2-2200	5	X															
				5		X														
C5.21	C-F		2-2200	6	X															
				6		X														
C5.21	C-F		2-2200	7	X															
				7		X														
C5.21	C-F		2-2200	8	X															
				8		X														
C5.21	C-F		2-2200	9	X								/							
				9		X							/							
C5.21	C-F		2-2200	10	X								/							
				10		X							/							
C5.21	C-F		2-2200	11	X															
				11		X														
C5.21	C-F		2-2200	12	X															
				12		X														
C5.21	C-F		2-2200	13	X															
				13		X														
C5.21	C-F		2-2200	14	X															
				14		X														
C5.21	C-F		2-2200	15	X															
				15		X														
C5.21	C-F		2-2201	1	X															
				1		X														
C5.21	C-F		2-2201	2	X															
				2		X														
C5.21	C-F		2-2201	4	X															
				4		X														

NSID COMPONENT SURVEILLANCE SCHEDULE

Effective Date 09/05/89 Process Date 03/09/90

COMPONENT: CIRC. PIPE WELDS > 1/2" NWT

83S	83S		INT		EXAMINATION METHODS			FIRST INTERVAL			SECOND INTERVAL			THIRD INTERVAL			FOURTH INTERVAL			
ITEM NUMBER	CATEGORY NUMBER	DESCRIPTION	SKETCH NUMBER	IDENT. NUMBER	VOL.	SUR.	VIS.	1ST PER	2ND PER	3RD PER	1ST PER	2ND PER	3RD PER	1ST PER	2ND PER	3RD PER	1ST PER	2ND PER	3RD PER	REMARKS
C5.21	C-F		2-2201	5	X															
				5		X														
C5.21	C-F		2-2201	7	X															
				7		X														
C5.21	C-F		2-2201	8	X															
				8		X														
C5.21	C-F		2-2201	10	X															
				10		X														
C5.21	C-F		2-2201	11	X															
				11		X														
C5.21	C-F		2-2201	13	X															
				13		X														
C5.21	C-F		2-2201	14	X															
				14		X														
C5.21	C-F		2-2201	16	X															
				16		X														
C5.21	C-F		2-2201	17	X															
				17		X														
C5.21	C-F		2-2201	19	X															
				19		X														
C5.21	C-F		2-2201	28	X															
				28		X														
C5.21	C-F		2-2201	29	X															
				29		X														
C5.21	C-F		2-2201	30	X															
				30		X														
C5.21	C-F		2-2201	31	X															
				31		X														
C5.21	C-F		2-2201	32	X															
				32		X														
C5.21	C-F		2-2202	1	X						X									
				1		X					X									
C5.21	C-F		2-2202	2	X															
				2		X														
C5.21	C-F		2-2202	3	X															
				3		X														
C5.21	C-F		2-2202	4	X															
				4		X														
C5.21	C-F		2-2202	5	X															
				5		X														
C5.21	C-F		2-2202	6	X															
				6		X														

NSID COMPONENT SURVEILLANCE SCHEDULE

Effective Date 09/05/89 Process Date 03/09/90

COMPONENT: CIRC. PIPE WELDS > 1/2" NWT

83S	83S		INT		EXAMINATION METHODS			FIRST INTERVAL			SECOND INTERVAL			THIRD INTERVAL			FOURTH INTERVAL			
ITEM NUMBER	CATEGORY NUMBER	DESCRIPTION	SKETCH NUMBER	IDENT. NUMBER	VOL.	SUR.	VIS.	1ST PER	2ND PER	3RD PER	1ST PER	2ND PER	3RD PER	1ST PER	2ND PER	3RD PER	1ST PER	2ND PER	3RD PER	REMARKS
C5.21	C-F		2-2202	7	X															
				7		X														
C5.21	C-F		2-2202	8	X															
				8		X														
C5.21	C-F		2-2202	9	X															
				9		X														
C5.21	C-F		2-2202	10	X															
				10		X														
C5.21	C-F		2-2202	11	X															
				11		X														
C5.21	C-F		2-2202	12	X															
				12		X														
C5.21	C-F		2-2202	13	X															
				13		X														
C5.21	C-F		2-2202	14	X															
				14		X														
C5.21	C-F		2-2202	15	X															
				15		X														
C5.21	C-F		2-2202	16	X															
				16		X														
C5.21	C-F		2-2202	17	X															
				17		X														
C5.21	C-F		2-2300	1	X						X									
				1		X					X									
C5.21	C-F		2-2300	2	X															
				2		X														
C5.21	C-F		2-2300	3	X															
				3		X														
C5.21	C-F		2-2300	5	X															
				5		X														
C5.21	C-F		2-2300	6	X															
				6		X														
C5.21	C-F		2-2300	7	X															
				7		X														
C5.21	C-F		2-2300	8	X															
				8		X														
C5.21	C-F		2-2300	9	X							/								
				9		X						/								
C5.21	C-F		2-2300	10	X							/								
				10		X						/								
C5.21	C-F		2-2300	11	X															
				11		X														

NSID COMPONENT SURVEILLANCE SCHEDULE

Effective Date 09/05/89 Process Date 03/09/90

COMPONENT: CIRC. PIPE WELDS > 1/2" NWT

83S	83S		INT		EXAMINATION METHODS			FIRST INTERVAL			SECOND INTERVAL			THIRD INTERVAL			FOURTH INTERVAL			
ITEM NUMBER	CATEGORY NUMBER	DESCRIPTION	SKETCH NUMBER	IDENT. NUMBER	VOL.	SUR.	VIS.	1ST PER	2ND PER	3RD PER	1ST PER	2ND PER	3RD PER	1ST PER	2ND PER	3RD PER	1ST PER	2ND PER	3RD PER	REMARKS
C5.21	C-F		2-2300	12	X															
				12		X														
C5.21	C-F		2-2300	13	X															
				13		X														
C5.21	C-F		2-2300	14	X															
				14		X														
C5.21	C-F		2-2300	15	X															
				15		X														
C5.21	C-F		2-2300	16	X															
				16		X														
C5.21	C-F		2-2301	1	X															
				1		X														
C5.21	C-F		2-2301	3	X															
				3		X														
C5.21	C-F		2-2301	4	X															
				4		X														
C5.21	C-F		2-2301	5	X															
				5		X														
C5.21	C-F		2-2301	6	X															
				6		X														
C5.21	C-F		2-2301	8	X															
				8		X														
C5.21	C-F		2-2301	9	X															
				9		X														
C5.21	C-F		2-2301	11	X															
				11		X														
C5.21	C-F		2-2301	12	X															
				12		X														
C5.21	C-F		2-2301	14	X															
				14		X														
C5.21	C-F		2-2301	15	X															
				15		X														
C5.21	C-F		2-2301	17	X								/							
				17		X							/							
C5.21	C-F		2-2301	18	X															
				18		X														
C5.21	C-F		2-2301	20	X								/							
				20		X							/							
C5.21	C-F		2-2301	21	X															
				21		X														
C5.21	C-F		2-2301	23	X															
				23		X														

NSID COMPONENT SURVEILLANCE SCHEDULE

Effective Date 09/05/89 Process Date 03/09/90

COMPONENT: CIRC. PIPE WELDS > 1/2" NWT

83S	83S		INT		EXAMINATION METHODS			FIRST INTERVAL			SECOND INTERVAL			THIRD INTERVAL			FOURTH INTERVAL			
ITEM NUMBER	CATEGORY NUMBER	DESCRIPTION	SKETCH NUMBER	IDENT. NUMBER	VOL.	SUR.	VIS.	1ST PER	2ND PER	3RD PER	1ST PER	2ND PER	3RD PER	1ST PER	2ND PER	3RD PER	1ST PER	2ND PER	3RD PER	REMARKS
C5.21	C-F		2-2301	31	X															
				31		X														
C5.21	C-F		2-2301	32	X															
				32		X														
C5.21	C-F		2-2301	33	X															
				33		X														
C5.21	C-F		2-2302	1	X															
				1		X														
C5.21	C-F		2-2302	2	X						X									
				2		X					X									
C5.21	C-F		2-2302	3	X															
				3		X														
C5.21	C-F		2-2302	4	X															
				4		X														
C5.21	C-F		2-2302	5	X															
				5		X														
C5.21	C-F		2-2302	6	X															
				6		X														
C5.21	C-F		2-2302	7	X															
				7		X														
C5.21	C-F		2-2302	8	X															
				8		X														
C5.21	C-F		2-2302	9	X						X									
				9		X					X									
C5.21	C-F		2-2302	10	X						X									
				10		X					X									
C5.21	C-F		2-2302	11	X															
				11		X														
C5.21	C-F		2-2302	12	X															
				12		X														
C5.21	C-F		2-2302	13	X															
				13		X														
C5.21	C-F		2-2302	14	X								/							
				14		X							/							
C5.21	C-F		2-2302	15	X															
				15		X														
C5.21	C-F		2-2302	16	X															
				16		X														
C5.21	C-F		2-2302	17	X															
				17		X														
C5.21	C-F		2-2302	18	X															
				18		X														

NSID COMPONENT SURVEILLANCE SCHEDULE

Effective Date 09/05/89 Process Date 03/09/90

COMPONENT: CIRC. PIPE WELDS > 1/2" NWT

83S	83S		INT		EXAMINATION METHODS			FIRST INTERVAL			SECOND INTERVAL			THIRD INTERVAL			FOURTH INTERVAL			
ITEM NUMBER	CATEGORY NUMBER	DESCRIPTION	SKETCH NUMBER	IDENT. NUMBER	VOL.	SUR.	VIS.	1ST PER	2ND PER	3RD PER	1ST PER	2ND PER	3RD PER	1ST PER	2ND PER	3RD PER	1ST PER	2ND PER	3RD PER	REMARKS
C5.21	C-F		2-2400	1	X															
				1		X														
C5.21	C-F		2-2400	2	X															
				2		X														
C5.21	C-F		2-2400	3	X															
				3		X														
C5.21	C-F		2-2400	5	X															
				5		X														
C5.21	C-F		2-2400	6	X															
				6		X														
C5.21	C-F		2-2400	7	X								/							
				7		X							/							
C5.21	C-F		2-2400	8	X								/							
				8		X							/							
C5.21	C-F		2-2400	9	X															
				9		X														
C5.21	C-F		2-2400	10	X															
				10		X														
C5.21	C-F		2-2400	11	X															
				11		X														
C5.21	C-F		2-2400	12	X															
				12		X														
C5.21	C-F		2-2400	13	X						X									
				13		X					X									
C5.21	C-F		2-2400	14	X															
				14		X														
C5.21	C-F		2-2401	1	X						X									
				1		X					X									
C5.21	C-F		2-2401	2	X						X									
				2		X					X									
C5.21	C-F		2-2401	4	X							/								
				4		X						/								
C5.21	C-F		2-2401	5	X							/								
				5		X						/								
C5.21	C-F		2-2401	7	X							/								
				7		X						/								
C5.21	C-F		2-2401	8	X							/								
				8		X						/								
C5.21	C-F		2-2401	10	X															
				10		X														
C5.21	C-F		2-2401	11	X															
				11		X														

NSID COMPONENT SURVEILLANCE SCHEDULE

Effective Date 09/05/89 Process Date 03/09/90

COMPONENT: CIRC. PIPE WELDS > 1/2" NWT

83S	83S		INT		EXAMINATION METHODS			FIRST INTERVAL			SECOND INTERVAL			THIRD INTERVAL			FOURTH INTERVAL			
ITEM NUMBER	CATEGORY NUMBER	DESCRIPTION	SKETCH NUMBER	IDENT. NUMBER	VOL.	SUR.	VIS.	1ST PER	2ND PER	3RD PER	1ST PER	2ND PER	3RD PER	1ST PER	2ND PER	3RD PER	1ST PER	2ND PER	3RD PER	REMARKS
C5.21	C-F		2-2401	13	X															
				13		X														
C5.21	C-F		2-2401	14	X															
				14		X														
C5.21	C-F		2-2401	16	X															
				16		X														
C5.21	C-F		2-2401	17	X															
				17		X														
C5.21	C-F		2-2401	19	X															
				19		X														
C5.21	C-F		2-2401	28	X															
				28		X														
C5.21	C-F		2-2401	29	X															
				29		X														
C5.21	C-F		2-2401	30	X															
				30		X														
C5.21	C-F		2-2401	31	X															
				31		X														
C5.21	C-F		2-2402	1	X															
				1		X														
C5.21	C-F		2-2402	2	X						X									
				2		X					X									
C5.21	C-F		2-2402	3	X						X									
				3		X					X									
C5.21	C-F		2-2402	4	X						X									
				4		X					X									
C5.21	C-F		2-2402	6	X															
				6		X														
C5.21	C-F		2-2402	7	X															
				7		X														
C5.21	C-F		2-2402	9	X															
				9		X														
C5.21	C-F		2-2402	10	X															
				10		X														
C5.21	C-F		2-2402	11	X						X									
				11		X					X									
C5.21	C-F		2-2402	12	X						X									
				12		X					X									
C5.21	C-F		2-2402	13	X															
				13		X														
C5.21	C-F		2-2402	14	X															
				14		X														

NSID COMPONENT SURVEILLANCE SCHEDULE

Effective Date 09/05/89 Process Date 03/09/90

COMPONENT: CIRC. PIPE WELDS > 1/2" NWT

83S	83S		INT		EXAMINATION METHODS			FIRST INTERVAL			SECOND INTERVAL			THIRD INTERVAL			FOURTH INTERVAL			
ITEM NUMBER	CATEGORY NUMBER	DESCRIPTION	SKETCH NUMBER	IDENT. NUMBER	VOL.	SUR.	VIS.	1ST PER	2ND PER	3RD PER	1ST PER	2ND PER	3RD PER	1ST PER	2ND PER	3RD PER	1ST PER	2ND PER	3RD PER	REMARKS
C5.21	C-F		2-2402	15	X															
				15		X														
C5.21	C-F		2-2402	16	X															
				16		X														
C5.21	C-F		2-2402	17	X															
				17		X														
C5.21	C-F		2-2402	18	X															
				18		X														
C5.21	C-F		2-2402	19	X															
				19		X														
C5.21	C-F		2-2402	20	X															
				20		X														
C5.21	C-F		2-2402	21	X															
				21		X														
C5.21	C-F		2-2402	22	X															
				22		X														
C5.21	C-F		2-2521	1	X								/							
				1		X							/							
C5.21	C-F		2-2521	2	X								/							
				2		X							/							
C5.21	C-F		2-2521	3	X															
				3		X														
C5.21	C-F		2-2521	28	X															
				28		X														
C5.21	C-F		2-2521	29	X															
				29		X														
C5.21	C-F		2-2521	30(DM)	X															
				30(DM)		X														
C5.21	C-F		2-2522	1	X						X									
				1		X					X									
C5.21	C-F		2-2522	2	X															
				2		X														
C5.21	C-F		2-2522	3	X						X									
				3		X					X									
C5.21	C-F		2-2522	4	X															
				4		X														
C5.21	C-F		2-2522	10	X															
				10		X														
C5.21	C-F		2-2522	11	X															
				11		X														

NSID COMPONENT SURVEILLANCE SCHEDULE

Effective Date 09/05/89 Process Date 03/09/90

COMPONENT: CIRC. PIPE WELDS > 1/2" NWT

83S	83S		INT		EXAMINATION METHODS			FIRST INTERVAL			SECOND INTERVAL			THIRD INTERVAL			FOURTH INTERVAL			
ITEM NUMBER	CATEGORY NUMBER	DESCRIPTION	SKETCH NUMBER	IDENT. NUMBER	VOL.	SUR.	VIS.	1ST PER	2ND PER	3RD PER	1ST PER	2ND PER	3RD PER	1ST PER	2ND PER	3RD PER	1ST PER	2ND PER	3RD PER	REMARKS
C5.21	C-F		2-2522	12	X															
				12		X														
C5.21	C-F		2-2522	13	X															
				13		X														
C5.21	C-F		2-2522	14(DM)	X							/								
				14(DM)		X						/								
C5.21	C-F		2-2523	1	X															
				1		X														
C5.21	C-F		2-2523	4	X															
				4		X														
C5.21	C-F		2-2523	5	X								/							
				5		X							/							
C5.21	C-F		2-2523	6	X								/							
				6		X							/							
C5.21	C-F		2-2523	7	X							/								
				7		X						/								
C5.21	C-F		2-2523	8	X							/								
				8		X						/								
C5.21	C-F		2-2523	9	X															
				9		X														
C5.21	C-F		2-2523	10(DM)	X															
				10(DM)		X														
C5.21	C-F		2-2524	1	X															
				1		X														
C5.21	C-F		2-2524	2	X															
				2		X														
C5.21	C-F		2-2524	10	X															
				10		X														
C5.21	C-F		2-2524	11	X								/							
				11		X							/							
C5.21	C-F		2-2524	12	X								/							
				12		X							/							
C5.21	C-F		2-2524	13	X															
				13		X														
C5.21	C-F		2-2524	14	X															
				14		X														
C5.21	C-F		2-2524	15(DM)	X															
				15(DM)		X														
C5.21	C-F		2-2531	1	X															
				1		X														

NSID COMPONENT SURVEILLANCE SCHEDULE

Effective Date 09/05/89 Process Date 03/09/90

COMPONENT: CIRC. PIPE WELDS > 1/2" NWT

83S	83S		INT		EXAMINATION METHODS			FIRST INTERVAL			SECOND INTERVAL			THIRD INTERVAL			FOURTH INTERVAL			
ITEM NUMBER	CATEGORY NUMBER	DESCRIPTION	SKETCH NUMBER	IDENT. NUMBER	VOL.	SUR.	VIS.	1ST PER	2ND PER	3RD PER	1ST PER	2ND PER	3RD PER	1ST PER	2ND PER	3RD PER	1ST PER	2ND PER	3RD PER	REMARKS
C5.21	C-F		2-2531	2	X															
				2		X														
C5.21	C-F		2-2531	3	X															
				3		X														
C5.21	C-F		2-2531	4	X															
				4		X														
C5.21	C-F		2-2531	5	X															
				5		X														
C5.21	C-F		2-2531	6	X						X									
				6		X					X									
C5.21	C-F		2-2531	7	X						X									
				7		X					X									
C5.21	C-F		2-2531	8	X						X									
				8		X					X									
C5.21	C-F		2-2531	9	X						X									
				9		X					X									
C5.21	C-F		2-2531	10	X															
				10		X														
C5.21	C-F		2-2531	11	X															
				11		X														
C5.21	C-F		2-2531	12	X															
				12		X														
C5.21	C-F		2-2531	13	X															
				13		X														
C5.21	C-F		2-2531	14	X															
				14		X														
C5.21	C-F		2-2531	15	X															
				15		X														
C5.21	C-F		2-2531	16	X															
				16		X														
C5.21	C-F		2-2531	17	X															
				17		X														
C5.21	C-F		2-2531	18	X							/								
				18		X						/								
C5.21	C-F		2-2531	19	X							/								
				19		X						/								
C5.21	C-F		2-2531	20	X						X									
				20		X					X									
C5.21	C-F		2-2531	21	X						X									
				21		X					X									
C5.21	C-F		2-2531	22	X															
				22		X														

NSID COMPONENT SURVEILLANCE SCHEDULE

Effective Date 09/05/89 Process Date 03/09/90

COMPONENT: CIRC. PIPE WELDS > 1/2" NWT

83S	83S		INT		EXAMINATION METHODS			FIRST INTERVAL			SECOND INTERVAL			THIRD INTERVAL			FOURTH INTERVAL			
ITEM NUMBER	CATEGORY NUMBER	DESCRIPTION	SKETCH NUMBER	IDENT. NUMBER	VOL.	SUR.	VIS.	1ST PER	2ND PER	3RD PER	1ST PER	2ND PER	3RD PER	1ST PER	2ND PER	3RD PER	1ST PER	2ND PER	3RD PER	REMARKS
C5.21	C-F		2-2532	1	X															
				1		X														
C5.21	C-F		2-2532	2	X															
				2		X														
C5.21	C-F		2-2532	3	X															
				3		X														
C5.21	C-F		2-2532	4	X															
				4		X														
C5.21	C-F		2-2532	5	X						X									
				5		X					X									
C5.21	C-F		2-2532	6	X						X									
				6		X					X									
C5.21	C-F		2-2532	7	X															
				7		X														
C5.21	C-F		2-2532	8	X							/								
				8		X						/								
C5.21	C-F		2-2532	9	X							/								
				9		X						/								
C5.21	C-F		2-2532	10	X							/								
				10		X						/								
C5.21	C-F		2-2532	11	X							/								
				11		X						/								
C5.21	C-F		2-2532	12	X															
				12		X														
C5.21	C-F		2-2532	13	X															
				13		X														
C5.21	C-F		2-2532	14	X								/							
				14		X							/							
C5.21	C-F		2-2532	15	X								/							
				15		X							/							
C5.21	C-F		2-2532	16	X															
				16		X														
C5.21	C-F		2-2532	17	X															
				17		X														
C5.21	C-F		2-2533	1	X															
				1		X														
C5.21	C-F		2-2533	2	X															
				2		X														
C5.21	C-F		2-2533	3	X															
				3		X														
C5.21	C-F		2-2533	4	X															
				4		X														

NSID COMPONENT SURVEILLANCE SCHEDULE

Effective Date 09/05/89 Process Date 03/09/90

COMPONENT: CIRC. PIPE WELDS > 1/2" NWT

83S	83S		INT		EXAMINATION METHODS			FIRST INTERVAL			SECOND INTERVAL			THIRD INTERVAL			FOURTH INTERVAL			
ITEM NUMBER	CATEGORY NUMBER	DESCRIPTION	SKETCH NUMBER	IDENT. NUMBER	VOL.	SUR.	VIS.	1ST PER	2ND PER	3RD PER	1ST PER	2ND PER	3RD PER	1ST PER	2ND PER	3RD PER	1ST PER	2ND PER	3RD PER	REMARKS
C5.21	C-F		2-2533	5	X															
				5		X														
C5.21	C-F		2-2533	6	X							/								
				6		X						/								
C5.21	C-F		2-2533	7	X							/								
				7		X						/								
C5.21	C-F		2-2533	8	X															
				8		X														
C5.21	C-F		2-2533	9	X							/								
				9		X						/								
C5.21	C-F		2-2533	10	X															
				10		X														
C5.21	C-F		2-2541	1	X															
				1		X														
C5.21	C-F		2-2541	2	X															
				2		X														
C5.21	C-F		2-2541	3	X															
				3		X														
C5.21	C-F		2-2541	4	X															
				4		X														
C5.21	C-F		2-2541	5	X															
				5		X														
C5.21	C-F		2-2541	6	X															
				6		X														
C5.21	C-F		2-2541	7	X															
				7		X														
C5.21	C-F		2-2541	8	X															
				8		X														
C5.21	C-F		2-2541	9	X															
				9		X														
C5.21	C-F		2-2541	10	X															
				10		X														
C5.21	C-F		2-2541	11	X															
				11		X														
C5.21	C-F		2-2541	12	X															
				12		X														
C5.21	C-F		2-2541	13	X															
				13		X														
C5.21	C-F		2-2541	14	X								/							
				14		X							/							
C5.21	C-F		2-2541	15	X								/							
				15		X							/							

NSID COMPONENT SURVEILLANCE SCHEDULE

Effective Date 09/05/89 Process Date 03/09/90

COMPONENT: CIRC. PIPE WELDS > 1/2" NWT

83S	83S		INT		EXAMINATION METHODS			FIRST INTERVAL			SECOND INTERVAL			THIRD INTERVAL			FOURTH INTERVAL			
ITEM NUMBER	CATEGORY NUMBER	DESCRIPTION	SKETCH NUMBER	IDENT. NUMBER	VOL.	SUR.	VIS.	1ST PER	2ND PER	3RD PER	1ST PER	2ND PER	3RD PER	1ST PER	2ND PER	3RD PER	1ST PER	2ND PER	3RD PER	REMARKS
C5.21	C-F		2-2541	16	X								/							
				16		X							/							
C5.21	C-F		2-2541	17	X								/							
				17		X							/							
C5.21	C-F		2-2541	18	X															
				18		X														
C5.21	C-F		2-2541	19	X															
				19		X														
C5.21	C-F		2-2541	20	X															
				20		X														
C5.21	C-F		2-2541	21	X															
				21		X														
C5.21	C-F		2-2541	22	X						X									
				22		X					X									
C5.21	C-F		2-2541	23	X						X									
				23		X					X									
C5.21	C-F		2-2541	24	X															
				24		X														
C5.21	C-F		2-2541	25	X															
				25		X														
C5.21	C-F		2-2541	26	X															
				26		X														
C5.21	C-F		2-2541	27	X															
				27		X														
C5.21	C-F		2-2541	28	X															
				28		X														
C5.21	C-F		2-2541	29	X															
				29		X														
C5.21	C-F		2-2541	30	X															
				30		X														
C5.21	C-F		2-2541	31	X															
				31		X														
C5.21	C-F		2-2541	32	X															
				32		X														
C5.21	C-F		2-2541	33	X															
				33		X														
C5.21	C-F		2-2541	34	X															
				34		X														
C5.21	C-F		2-2541	35	X															
				35		X														
C5.21	C-F		2-2541	36	X															
				36		X														

NSID COMPONENT SURVEILLANCE SCHEDULE

Effective Date 09/05/89 Process Date 03/09/90

COMPONENT: CIRC. PIPE WELDS > 1/2" NWT

83S	83S		INT		EXAMINATION METHODS			FIRST INTERVAL			SECOND INTERVAL			THIRD INTERVAL			FOURTH INTERVAL			
ITEM NUMBER	CATEGORY NUMBER	DESCRIPTION	SKETCH NUMBER	IDENT. NUMBER	VOL.	SUR.	VIS.	1ST PER	2ND PER	3RD PER	1ST PER	2ND PER	3RD PER	1ST PER	2ND PER	3RD PER	1ST PER	2ND PER	3RD PER	REMARKS
C5.21	C-F		2-2541	37	X															
				37		X														
C5.21	C-F		2-2542	1	X															
				1		X														
C5.21	C-F		2-2542	2	X															
				2		X														
C5.21	C-F		2-2542	3	X															
				3		X														
C5.21	C-F		2-2542	4	X															
				4		X														
C5.21	C-F		2-2542	5	X															
				5		X														
C5.21	C-F		2-2542	6	X															
				6		X														
C5.21	C-F		2-2542	7	X								/							
				7		X							/							
C5.21	C-F		2-2542	8	X								/							
				8		X							/							
C5.21	C-F		2-2542	9	X								/							
				9		X							/							
C5.21	C-F		2-2542	10	X															
				10		X														
C5.21	C-F		2-2542	11	X															
				11		X														
C5.21	C-F		2-2542	12	X						X									
				12		X					X									
C5.21	C-F		2-2542	13	X						X									
				13		X					X									
C5.21	C-F		2-2542	14	X						X									
				14		X					X									
C5.21	C-F		2-2542	15	X						X									
				15		X					X									
C5.21	C-F		2-2542	16	X															
				16		X														
C5.21	C-F		2-2542	17	X															
				17		X														
C5.21	C-F		2-2542	18	X															
				18		X														
C5.21	C-F		2-2542	19	X															
				19		X														
C5.21	C-F		2-2542	20	X															
				20		X														

NSID COMPONENT SURVEILLANCE SCHEDULE

Effective Date 09/05/89 Process Date 03/09/90

COMPONENT: CIRC. PIPE WELDS > 1/2" NWT

83S	83S		INT		EXAMINATION METHODS			FIRST INTERVAL			SECOND INTERVAL			THIRD INTERVAL			FOURTH INTERVAL			
ITEM NUMBER	CATEGORY NUMBER	DESCRIPTION	SKETCH NUMBER	IDENT. NUMBER	VOL.	SUR.	VIS.	1ST PER	2ND PER	3RD PER	1ST PER	2ND PER	3RD PER	1ST PER	2ND PER	3RD PER	1ST PER	2ND PER	3RD PER	REMARKS
C5.21	C-F		2-2542	21	X															
				21		X														
C5.21	C-F		2-2542	22	X															
				22		X														
C5.21	C-F		2-2542	23	X															
				23		X														
C5.21	C-F		2-2542	24	X							/								
				24		X						/								
C5.21	C-F		2-2542	25	X							/								
				25		X						/								
C5.21	C-F		2-2542	26	X							/								
				26		X						/								
C5.21	C-F		2-2542	27	X							/								
				27		X						/								
C5.21	C-F		2-2542	28	X															
				28		X														
C5.21	C-F		2-2542	29	X															
				29		X														
C5.21	C-F		2-2542	30	X															
				30		X														
		TOTAL ID's for C5.21		343 *							32	26	22							

NSID COMPONENT SURVEILLANCE SCHEDULE

Effective Date 09/05/89 Process Date 03/09/90

COMPONENT: LONG. PIPE WELDS > 1/2" NWT

83S	83S		INT		EXAMINATION METHODS			FIRST INTERVAL			SECOND INTERVAL			THIRD INTERVAL			FOURTH INTERVAL			
ITEM NUMBER	CATEGORY NUMBER	DESCRIPTION	SKETCH NUMBER	IDENT. NUMBER	VOL.	SUR.	VIS.	1ST PER	2ND PER	3RD PER	1ST PER	2ND PER	3RD PER	1ST PER	2ND PER	3RD PER	1ST PER	2ND PER	3RD PER	REMARKS
C5.22	C-F		2-2300	17LS	X															REFERENCE TABLE 4.0
				17LS		X														
C5.22	C-F		2-2300	18LS	X							/								
				18LS		X						/								
C5.22	C-F		2-2522	15LS	X															
				15LS		X														
C5.22	C-F		2-2522	16LS	X															
				16LS		X														
C5.22	C-F		2-2522	17LS	X							/								
				17LS		X						/								
C5.22	C-F		2-2522	18LS	X							/								
				18LS		X						/								
C5.22	C-F		2-2533	11LS	X						X									
				11LS		X					X									
C5.22	C-F		2-2541	38LS	X								/							
				38LS		X							/							
		TOTAL ID's for C5.22		8 *							1	3	1							

NSID COMPONENT SURVEILLANCE SCHEDULE

Effective Date 09/05/89 Process Date 03/09/90

COMPONENT: PIPE BRANCH CONN. CIRC. WELDS > 4" NBPS

83S	83S		INT		EXAMINATION METHODS			FIRST INTERVAL			SECOND INTERVAL			THIRD INTERVAL			FOURTH INTERVAL			
ITEM NUMBER	CATEGORY NUMBER	DESCRIPTION	SKETCH NUMBER	IDENT. NUMBER	VOL.	SUR.	VIS.	1ST PER	2ND PER	3RD PER	1ST PER	2ND PER	3RD PER	1ST PER	2ND PER	3RD PER	1ST PER	2ND PER	3RD PER	REMARKS
C5.31	C-F		2-2101	2(BC)		X														REFERENCE TABLE 4.0
C5.31	C-F		2-2101	7(BC)		X					X									
C5.31	C-F		2-2101	10(BC)		X														
C5.31	C-F		2-2101	13(BC)		X														
C5.31	C-F		2-2101	16(BC)		X														
C5.31	C-F		2-2101	19(BC)		X														
C5.31	C-F		2-2101	22(BC)		X					X									
C5.31	C-F		2-2201	3(BC)		X														
C5.31	C-F		2-2201	6(BC)		X														
C5.31	C-F		2-2201	9(BC)		X														
C5.31	C-F		2-2201	12(BC)		X														
C5.31	C-F		2-2201	15(BC)		X														
C5.31	C-F		2-2201	18(BC)		X														
C5.31	C-F		2-2201	27(BC)		X														
C5.31	C-F		2-2301	2(BC)		X														
C5.31	C-F		2-2301	7(BC)		X														
C5.31	C-F		2-2301	10(BC)		X														
C5.31	C-F		2-2301	13(BC)		X														
C5.31	C-F		2-2301	16(BC)		X							/							
C5.31	C-F		2-2301	19(BC)		X							/							
C5.31	C-F		2-2301	22(BC)		X														
C5.31	C-F		2-2401	3(BC)		X						/								
C5.31	C-F		2-2401	6(BC)		X						/								
C5.31	C-F		2-2401	9(BC)		X														
C5.31	C-F		2-2401	12(BC)		X														
C5.31	C-F		2-2401	15(BC)		X														
C5.31	C-F		2-2401	18(BC)		X														
C5.31	C-F		2-2401	27(BC)		X														
		TOTAL ID's for C5.31		28 *							2	2	2							

NSID COMPONENT SURVEILLANCE SCHEDULE

Effective Date 09/05/89 Process Date 03/09/90

COMPONENT: PRESSURE VESSEL PRESSURE RETAINING COMPONENTS

83S	83S		INT		EXAMINATION METHODS			FIRST INTERVAL			SECOND INTERVAL			THIRD INTERVAL			FOURTH INTERVAL			
ITEM NUMBER	CATEGORY NUMBER	DESCRIPTION	SKETCH NUMBER	IDENT. NUMBER	VOL.	SUR.	VIS.	1ST PER	2ND PER	3RD PER	1ST PER	2ND PER	3RD PER	1ST PER	2ND PER	3RD PER	1ST PER	2ND PER	3RD PER	REMARKS
C7.10	C-H		2-9100	7 LEAK			X				/	/	/							VT-2. REF.TABLE 4.0
		TOTAL ID's for C7.10		1 *							1	1	1							

NSID COMPONENT SURVEILLANCE SCHEDULE

Effective Date 09/05/89 Process Date 03/09/90

COMPONENT: PRESSURE VESSEL PRESSURE RETAINING COMPONENTS

83S	83S		INT		EXAMINATION METHODS			FIRST INTERVAL			SECOND INTERVAL			THIRD INTERVAL			FOURTH INTERVAL			
ITEM NUMBER	CATEGORY NUMBER	DESCRIPTION	SKETCH NUMBER	IDENT. NUMBER	VOL.	SUR.	VIS.	1ST PER	2ND PER	3RD PER	1ST PER	2ND PER	3RD PER	1ST PER	2ND PER	3RD PER	1ST PER	2ND PER	3RD PER	REMARKS
C7.20	C-H		2-9600	7 HYDRO			X						/							VT-2. REF.TABLE 4.0
		TOTAL ID's for C7.20		1 *									1							

NSID COMPONENT SURVEILLANCE SCHEDULE

Effective Date 09/05/89 Process Date 03/09/90

COMPONENT: PIPING PRESSURE RETAINING COMPONENTS

83S	83S		INT		EXAMINATION METHODS			FIRST INTERVAL			SECOND INTERVAL			THIRD INTERVAL			FOURTH INTERVAL			
ITEM NUMBER	CATEGORY NUMBER	DESCRIPTION	SKETCH NUMBER	IDENT. NUMBER	VOL.	SUR.	VIS.	1ST PER	2ND PER	3RD PER	1ST PER	2ND PER	3RD PER	1ST PER	2ND PER	3RD PER	1ST PER	2ND PER	3RD PER	REMARKS
C7.30	C-H		2-9100	8 LEAK			X				/	/	/							VT-2. REF.TABLE 4.0
		TOTAL ID's for C7.30		1 *							1	1	1							

NSID COMPONENT SURVEILLANCE SCHEDULE

Effective Date 09/05/89 Process Date 03/09/90

COMPONENT: PIPING PRESSURE RETAINING COMPONENTS

83S	83S		INT		EXAMINATION METHODS			FIRST INTERVAL			SECOND INTERVAL			THIRD INTERVAL			FOURTH INTERVAL			
ITEM NUMBER	CATEGORY NUMBER	DESCRIPTION	SKETCH NUMBER	IDENT. NUMBER	VOL.	SUR.	VIS.	1ST PER	2ND PER	3RD PER	1ST PER	2ND PER	3RD PER	1ST PER	2ND PER	3RD PER	1ST PER	2ND PER	3RD PER	REMARKS
C7.40	C-H		2-9600	8 HYDRO			X						/							VT-2. REF.TABLE 4.0
		TOTAL ID's for C7.40		1 *									1							

NSID COMPONENT SURVEILLANCE SCHEDULE

Effective Date 09/05/89 Process Date 03/09/90

COMPONENT: PUMPS PRESSURE RETAINING COMPONENTS

83S	83S		INT		EXAMINATION METHODS			FIRST INTERVAL			SECOND INTERVAL			THIRD INTERVAL			FOURTH INTERVAL			
ITEM NUMBER	CATEGORY NUMBER	DESCRIPTION	SKETCH NUMBER	IDENT. NUMBER	VOL.	SUR.	VIS.	1ST PER	2ND PER	3RD PER	1ST PER	2ND PER	3RD PER	1ST PER	2ND PER	3RD PER	1ST PER	2ND PER	3RD PER	REMARKS
C7.50	C-H		2-9100	9 LEAK			X				/	/	/							VT-2. REF TABLE 4.0
		TOTAL ID's for C7.50		1 *							1	1	1							

NSID COMPONENT SURVEILLANCE SCHEDULE

Effective Date 09/05/89 Process Date 03/09/90

COMPONENT: PUMPS PRESSURE RETAINING COMPONENTS

83S	83S		INT		EXAMINATION METHODS			FIRST INTERVAL			SECOND INTERVAL			THIRD INTERVAL			FOURTH INTERVAL			
ITEM NUMBER	CATEGORY NUMBER	DESCRIPTION	SKETCH NUMBER	IDENT. NUMBER	VOL.	SUR.	VIS.	1ST PER	2ND PER	3RD PER	1ST PER	2ND PER	3RD PER	1ST PER	2ND PER	3RD PER	1ST PER	2ND PER	3RD PER	REMARKS
C7.60	C-H		2-9600	9 HYDRO			X						/							VT-2. REF.TABLE 4.0
		TOTAL ID's for C7.60		1 *									1							

NSID COMPONENT SURVEILLANCE SCHEDULE

Effective Date 09/05/89 Process Date 03/09/90

COMPONENT: VALVES PRESSURE RETAINING COMPONENTS

83S	83S		INT		EXAMINATION METHODS			FIRST INTERVAL			SECOND INTERVAL			THIRD INTERVAL			FOURTH INTERVAL			
ITEM NUMBER	CATEGORY NUMBER	DESCRIPTION	SKETCH NUMBER	IDENT. NUMBER	VOL.	SUR.	VIS.	1ST PER	2ND PER	3RD PER	1ST PER	2ND PER	3RD PER	1ST PER	2ND PER	3RD PER	1ST PER	2ND PER	3RD PER	REMARKS
C7.70	C-H		2-9100	10 LEAK			X				/	/	/							VT-2. REF.TABLE 4.0
		TOTAL ID's for C7.70		1 *							1	1	1							

NSID COMPONENT SURVEILLANCE SCHEDULE

Effective Date 09/05/89 Process Date 03/09/90

COMPONENT: VALVES PRESSURE RETAINING COMPONENTS

83S	83S		INT		EXAMINATION METHODS			FIRST INTERVAL			SECOND INTERVAL			THIRD INTERVAL			FOURTH INTERVAL			
ITEM NUMBER	CATEGORY NUMBER	DESCRIPTION	SKETCH NUMBER	IDENT. NUMBER	VOL.	SUR.	VIS.	1ST PER	2ND PER	3RD PER	1ST PER	2ND PER	3RD PER	1ST PER	2ND PER	3RD PER	1ST PER	2ND PER	3RD PER	REMARKS
C7.80	C-H		2-9600	10 HYDRO			X						/							VT-2. REF.TABLE 4.0
		TOTAL ID's for C7.80		1 *									1							

NSID COMPONENT SURVEILLANCE SCHEDULE

Effective Date 09/05/89 Process Date 03/09/90

COMPONENT: *** CLASS TOTALS FOR IWC ***

83S	83S		INT		EXAMINATION METHODS			FIRST INTERVAL			SECOND INTERVAL			THIRD INTERVAL			FOURTH INTERVAL			
ITEM NUMBER	CATEGORY NUMBER	DESCRIPTION	SKETCH NUMBER	IDENT. NUMBER	VOL.	SUR.	VIS.	1ST PER	2ND PER	3RD PER	1ST PER	2ND PER	3RD PER	1ST PER	2ND PER	3RD PER	1ST PER	2ND PER	3RD PER	REMARKS
		CLASS TOTAL		1026 **							152	146	141							

NUCLEAR ENERGY SYSTEMS
FORM D037 08/25/87 Westinghouse Proprietary

NSID COMPONENT SURVEILLANCE SCHEDULE

Effective Date 09/05/89 Process Date 03/09/90

COMPONENT: PRESSURE RETAINING COMPONENTS

83S	83S		INT		EXAMINATION METHODS			FIRST INTERVAL			SECOND INTERVAL			THIRD INTERVAL			FOURTH INTERVAL			
ITEM NUMBER	CATEGORY NUMBER	DESCRIPTION	SKETCH NUMBER	IDENT. NUMBER	VOL.	SUR.	VIS.	1ST PER	2ND PER	3RD PER	1ST PER	2ND PER	3RD PER	1ST PER	2ND PER	3RD PER	1ST PER	2ND PER	3RD PER	REMARKS
D1.10	D-A		3-9100	11 LEAK			X				/	/								VT-2. REF.TABLE 4.0
D1.10	D-A		3-9600	11 HYDRO			X						/							VT-2. REF.TABLE 4.0
		TOTAL ID's for D1.10		2 *							1	1	1							

NSID COMPONENT SURVEILLANCE SCHEDULE

Effective Date 09/05/89 Process Date 03/09/90

COMPONENT: INTEGRAL ATTACHMENT-COMPONENT SUPPORTS & RESTRAINTS

83S	83S		INT		EXAMINATION METHODS			FIRST INTERVAL			SECOND INTERVAL			THIRD INTERVAL			FOURTH INTERVAL			
ITEM NUMBER	CATEGORY NUMBER	DESCRIPTION	SKETCH NUMBER	IDENT. NUMBER	VOL.	SUR.	VIS.	1ST PER	2ND PER	3RD PER	1ST PER	2ND PER	3RD PER	1ST PER	2ND PER	3RD PER	1ST PER	2ND PER	3RD PER	REMARKS
D1.20	D-A		3-1520	31 SUP			X				X									VT-3
D1.20	D-A		3-1520	32 SUP			X					/								
D1.20	D-A		3-1520	33 SUP			X						/							
		TOTAL ID's for D1.20		3 *							1	1	1							

NSID COMPONENT SURVEILLANCE SCHEDULE

Effective Date 09/05/89 Process Date 03/09/90

COMPONENT: PRESSURE RETAINING COMPONENTS

83S	83S		INT		EXAMINATION METHODS			FIRST INTERVAL			SECOND INTERVAL			THIRD INTERVAL			FOURTH INTERVAL			
ITEM NUMBER	CATEGORY NUMBER	DESCRIPTION	SKETCH NUMBER	IDENT. NUMBER	VOL.	SUR.	VIS.	1ST PER	2ND PER	3RD PER	1ST PER	2ND PER	3RD PER	1ST PER	2ND PER	3RD PER	1ST PER	2ND PER	3RD PER	REMARKS
D2.10	D-B		3-9100	12 LEAK			X				/	/								VT-2. REF.TABLE 4.0
D2.10	D-B		3-9600	12 HYDRO			X						/							VT-2. REF.TABLE 4.0
		TOTAL ID's for D2.10		2 *							1	1	1							

NSID COMPONENT SURVEILLANCE SCHEDULE

Effective Date 09/05/89 Process Date 03/09/90

COMPONENT: INTEGRAL ATTACHMENT--COMPONENT SUPPORTS & RESTRAINTS

83S	83S		INT		EXAMINATION METHODS			FIRST INTERVAL			SECOND INTERVAL			THIRD INTERVAL			FOURTH INTERVAL			
ITEM NUMBER	CATEGORY NUMBER	DESCRIPTION	SKETCH NUMBER	IDENT. NUMBER	VOL.	SUR.	VIS.	1ST PER	2ND PER	3RD PER	1ST PER	2ND PER	3RD PER	1ST PER	2ND PER	3RD PER	1ST PER	2ND PER	3RD PER	REMARKS
D2.20	D-B		3-1100	31 SUP			X					/								VT-3
D2.20	D-B		3-1100	32 SUP			X					/								
D2.20	D-B		3-1120	31 SUP			X				X									
D2.20	D-B		3-1130	31 SUP			X				X									
D2.20	D-B		3-1140	31 SUP			X				X									
D2.20	D-B		3-1140	32 SUP			X				X									
D2.20	D-B		3-1150	31 SUP			X					/								
D2.20	D-B		3-1160	31-JWC SUP			X				X									
D2.20	D-B		3-1160	31-LOC SUP			X				X									
D2.20	D-B		3-1160	32-JWC SUP			X				X									
D2.20	D-B		3-1160	32-LOC SUP			X				X									
D2.20	D-B		3-1160	33-JWC SUP			X				X									
D2.20	D-B		3-1160	33-LOC SUP			X				X									
D2.20	D-B		3-1170	31 SUP			X				X									
D2.20	D-B		3-1170	32 SUP			X				X									
D2.20	D-B		3-1170	33 SUP			X					/								
D2.20	D-B		3-1170	34 SUP			X					/								
D2.20	D-B		3-1180	31 SUP			X					/								
D2.20	D-B		3-1180	32 SUP			X					/								
D2.20	D-B		3-1190	31 SUP			X					/								
D2.20	D-B		3-1190	32 SUP			X					/								
D2.20	D-B		3-1200	31 SUP			X						/							
D2.20	D-B		3-1200	32 SUP			X						/							
D2.20	D-B		3-1210	31 SUP			X						/							
D2.20	D-B		3-1210	32 SUP			X						/							
D2.20	D-B		3-1220	31 SUP			X						/							
D2.20	D-B		3-1230	SUP			X						/							
D2.20	D-B		3-1300	31 SUP			X						/							
D2.20	D-B		3-1530	31 SUP			X					/								

NSID COMPONENT SURVEILLANCE SCHEDULE

Effective Date 09/05/89 Process Date 03/09/90

COMPONENT: INTEGRAL ATTACHMENT--COMPONENT SUPPORTS & RESTRAINTS

83S	83S		INT		EXAMINATION METHODS			FIRST INTERVAL			SECOND INTERVAL			THIRD INTERVAL			FOURTH INTERVAL			
ITEM NUMBER	CATEGORY NUMBER	DESCRIPTION	SKETCH NUMBER	IDENT. NUMBER	VOL.	SUR.	VIS.	1ST PER	2ND PER	3RD PER	1ST PER	2ND PER	3RD PER	1ST PER	2ND PER	3RD PER	1ST PER	2ND PER	3RD PER	REMARKS
D2.20	D-B		3-1530	32 SUP			X					/								
D2.20	D-B		3-1530	33 SUP			X					/								
D2.20	D-B		3-1540	31 SUP			X						/							
D2.20	D-B		3-1540	32 SUP			X						/							
D2.20	D-B		3-3402	SWN-A-199			X				X	/								
D2.20	D-B		3-3403	SWN-A-197			X					/								
D2.20	D-B		3-3407	SWN-A-561			X					/								
D2.20	D-B		3-3409	SW-H-79			X				X									
D2.20	D-B		3-3409	SW-H-85A			X				X									
D2.20	D-B		3-3409	SW-H&R-83			X				X									
D2.20	D-B		3-3409	SW-H&R-87			X				X									
D2.20	D-B		3-3409	M/S-11E-40			X				X									M/S-11E-40-SW-H&R-12E
D2.20	D-B		3-3409	SW-HR12E-1			X				X									
D2.20	D-B		3-3409	SWH&R12E-5			X				X									
D2.20	D-B		3-3410	M/S-12A-32			X					/								M/S-12A-32-SW-H-12C
D2.20	D-B		3-3410	M/S-12A-33			X				X									M/S-12A-33-SW-H&R-12B
D2.20	D-B		3-3410	M/S-12A-34			X				X									M/S-12A-34-SW-H-12C
D2.20	D-B		3-3410	M/S-12A-35			X				X									M/S-12A-35-SW-H&R-12B
D2.20	D-B		3-3410	M/S-12A-36			X				X									M/S-12A-36-SW-H-12C
D2.20	D-B		3-3410	M/S-12A-38			X				X									M/S-12A-38-SW-H-12C
D2.20	D-B		3-3410	MS12A-32SW			X					/								M/S-12A-32-SW-H-12B
D2.20	D-B		3-3410	MS12A-33SW			X				X									M/S-12A-33-SW-H&R-12C
D2.20	D-B		3-3410	MS12A-34SW			X				X									M/S-12A-34-SW-H-12B
D2.20	D-B		3-3410	MS12A-35SW			X				X									M/S-12A-35-SW-H&R-12C
D2.20	D-B		3-3410	SW-H12C-14			X				X									
D2.20	D-B		3-3410	SWHR12B-12			X				X									
D2.20	D-B		3-3410	SWHR12C-17			X				X									
D2.20	D-B		3-3411	M/S-12A-32			X						/							M/S-12A-32-SW-H-11A
D2.20	D-B		3-3411	M/S-12A-33			X						/							M/S-12A-33-SW-H&R-11A
D2.20	D-B		3-3411	M/S-12A-34			X						/							M/S-12A-34-SW-H-11A
D2.20	D-B		3-3411	M/S-12A-35			X						/							M/S-12A-35-SW-H&R-11A
D2.20	D-B		3-3411	SW-H12A-32			X					/								
D2.20	D-B		3-3411	SW-H12A-34			X				X									
D2.20	D-B		3-3411	SW-H12A-35			X				X									
D2.20	D-B		3-3411	SW-H12A-36			X				X									
D2.20	D-B		3-3411	SW-H12A-38			X				X									

NSID COMPONENT SURVEILLANCE SCHEDULE

Effective Date 09/05/89 Process Date 03/09/90

COMPONENT: INTEGRAL ATTACHMENT--COMPONENT SUPPORTS & RESTRAINTS

83S	83S		INT		EXAMINATION METHODS			FIRST INTERVAL			SECOND INTERVAL			THIRD INTERVAL			FOURTH INTERVAL			
ITEM NUMBER	CATEGORY NUMBER	DESCRIPTION	SKETCH NUMBER	IDENT. NUMBER	VOL.	SUR.	VIS.	1ST PER	2ND PER	3RD PER	1ST PER	2ND PER	3RD PER	1ST PER	2ND PER	3RD PER	1ST PER	2ND PER	3RD PER	REMARKS
D2.20	D-B		3-3411	SWHR-12A-9			X				X									
D2.20	D-B		3-3411	SWHR11A-22			X						/							
D2.20	D-B		3-3411	SWHR12A-33			X				X									
D2.20	D-B		3-3411	SWHR12A-39			X						/							
D2.20	D-B		3-3412	SW-H&R-91			X					/								
D2.20	D-B		3-3412	M/S-12A-32			X					/								M/S-12A-32-SW-H-11B
D2.20	D-B		3-3412	M/S-12A-33			X					/								M/S-12A-33-SW-H&R-11B
D2.20	D-B		3-3412	M/S-12A-34			X					/								M/S-12A-34-SW-H-11B
D2.20	D-B		3-3412	M/S-12A-35			X					/								M/S-12A-35-SW-H&R-11B
D2.20	D-B		3-3412	M/S-12A-36			X					/								M/S-12A-36-SW-H-11B
D2.20	D-B		3-3412	M/S-12A-38			X					/								M/S-12A-38-SW-H-11B
D2.20	D-B		3-3412	M/S-12A-39			X					/								M/S-12A-39-SW-H&R-11B
D2.20	D-B		3-3412	SWHR11B-25			X					/								
D2.20	D-B		3-3412	SWR-11D-28			X					/								
D2.20	D-B		3-3413	SW-H-35			X					/								
D2.20	D-B		3-3413	SW-H-40			X					/								
D2.20	D-B		3-3413	SW-H-41A			X					/								
D2.20	D-B		3-3413	SW-H-42A			X					/								
D2.20	D-B		3-3413	M/S-12E-1			X					/								M/S-12E-1-SW-H&R-11E
D2.20	D-B		3-3413	SW-H&R-39			X					/								
D2.20	D-B		3-3413	SWHR11E-31			X					/								
D2.20	D-B		3-3413	SWHR11E-40			X					/								
D2.20	D-B		3-3414	SW-H-19			X					/								
D2.20	D-B		3-3414	M/S-12A-32			X					/								M/S-12A-32-SW-H-11C
D2.20	D-B		3-3414	M/S-12A-33			X					/								M/S-12A-33-SW-H&R-11C
D2.20	D-B		3-3414	M/S-12A-34			X					/								M/S-12A-34-SW-H-11C
D2.20	D-B		3-3414	M/S-12A-35			X					/								M/S-12A-35-SW-H&R-11C
D2.20	D-B		3-3414	M/S-12A-36			X					/								M/S-12A-36-SW-H-11C
D2.20	D-B		3-3414	M/S-12A-38			X					/								M/S-12A-38-SW-H-11C
D2.20	D-B		3-3414	M/S-12A-39			X					/								M/S-12A-39-SW-H&R-11C
D2.20	D-B		3-3414	M/S-12C-14			X					/								M/S-12C-14-SW-H&R-11C
D2.20	D-B		3-3414	SWHR11C-27			X					/								
D2.20	D-B		3-3500	AC-H&R-519			X						/							
D2.20	D-B		3-3500	AC-H&R-523			X				X									
D2.20	D-B		3-3500	AC-H&R-524			X						/							
D2.20	D-B		3-3500	AC-H&R-528			X				X									
D2.20	D-B		3-3500	AC-H&R-532			X				X									
D2.20	D-B		3-3504	AC-H-52-4			X				X									

NSID COMPONENT SURVEILLANCE SCHEDULE

Effective Date 09/05/89 Process Date 03/09/90

COMPONENT: INTEGRAL ATTACHMENT--COMPONENT SUPPORTS & RESTRAINTS

83S	83S		INT		EXAMINATION METHODS			FIRST INTERVAL			SECOND INTERVAL			THIRD INTERVAL			FOURTH INTERVAL			
ITEM NUMBER	CATEGORY NUMBER	DESCRIPTION	SKETCH NUMBER	IDENT. NUMBER	VOL.	SUR.	VIS.	1ST PER	2ND PER	3RD PER	1ST PER	2ND PER	3RD PER	1ST PER	2ND PER	3RD PER	1ST PER	2ND PER	3RD PER	REMARKS
D2.20	D-B		3-3504	AC-HR-52-3			X				X									
D2.20	D-B		3-3504	AC-HR-52-5			X				X									
D2.20	D-B		3-3508	AC-A53-17C			X						/							
D2.20	D-B		3-3509	M/S-13-3B			X						/							M/S-13-3B-AC-H-14
D2.20	D-B		3-3509	AC-H-13-3B			X						/							
D2.20	D-B		3-3700	CTH-1071-1			X						/							
D2.20	D-B		3-3700	CTH-1071-4			X						/							
D2.20	D-B		3-3700	CTH-1071-7			X						/							
D2.20	D-B		3-3701	CTH-1072-5			X						/							
D2.20	D-B		3-3701	CTH-1073-5			X						/							
D2.20	D-B		3-3701	CTHR1072-1			X						/							
D2.20	D-B		3-3701	CTHR1073-1			X						/							
D2.20	D-B		3-3702	V-A-1016-1			X						/							
D2.20	D-B		3-3702	V-A-1017-2			X						/							
D2.20	D-B		3-3703	BFH1003-1A			X						/							
D2.20	D-B		3-3703	BFH1005-1A			X						/							
D2.20	D-B		3-3705	BFH1001-1B			X						/							
D2.20	D-B		3-4100	34 SUP			X				X		/							
D2.20	D-B		3-4100	35 SUP			X				X		/							
D2.20	D-B		3-4100	36 SUP			X				X		/							
D2.20	D-B		3-4110	31 SUP			X				X									
D2.20	D-B		3-4110	32 SUP			X				X									
D2.20	D-B		3-4110	33 SUP			X				X									
D2.20	D-B		3-4120	31 SUP			X						/							
D2.20	D-B		3-4120	32 SUP			X						/							
D2.20	D-B		3-4130	31 SUP			X					/								
D2.20	D-B		3-4130	32 SUP			X					/								
D2.20	D-B		3-4130	33 SUP			X					/								
D2.20	D-B		3-4140	31 SUP			X					/								
D2.20	D-B		3-4140	33 SUP			X					/								

NSID COMPONENT SURVEILLANCE SCHEDULE

Effective Date 09/05/89 Process Date 03/09/90

COMPONENT: INTEGRAL ATTACHMENT--COMPONENT SUPPORTS & RESTRAINTS

83S	83S		INT		EXAMINATION METHODS			FIRST INTERVAL			SECOND INTERVAL			THIRD INTERVAL			FOURTH INTERVAL			
ITEM NUMBER	CATEGORY NUMBER	DESCRIPTION	SKETCH NUMBER	IDENT. NUMBER	VOL.	SUR.	VIS.	1ST PER	2ND PER	3RD PER	1ST PER	2ND PER	3RD PER	1ST PER	2ND PER	3RD PER	1ST PER	2ND PER	3RD PER	REMARKS
D2.20	D-B		3-4150	32 SUP			X					/								
D2.20	D-B		3-4160	31 SUP			X						/							
D2.20	D-B		3-4160	32 SUP			X						/							
D2.20	D-B		3-4160	33 SUP			X						/							
D2.20	D-B		3-4160	34 SUP			X						/							
D2.20	D-B		3-4180	34 SUP			X						/							
D2.20	D-B		3-4180	35 SUP			X						/							
D2.20	D-B		3-4180	36 SUP			X						/							
D2.20	D-B		3-4190	31 SUP			X				X		/							
D2.20	D-B		3-4190	32 SUP			X				X		/							
D2.20	D-B		3-4190	33 SUP			X				X		/							
		TOTAL ID's for D2.20		144 *							52	52	47							

NSID COMPONENT SURVEILLANCE SCHEDULE

Effective Date 09/05/89 Process Date 03/09/90

COMPONENT: INTEGRAL ATTACHMENT--MECHANICAL & HYDRAULIC SNUBBERS

83S	83S		INT		EXAMINATION METHODS			FIRST INTERVAL			SECOND INTERVAL			THIRD INTERVAL			FOURTH INTERV.			
ITEM NUMBER	CATEGORY NUMBER	DESCRIPTION	SKETCH NUMBER	IDENT. NUMBER	VOL.	SUR.	VIS.	1ST PER	2ND PER	3RD PER	1ST PER	2ND PER	3RD PER	1ST PER	2ND PER	3RD PER	1ST PER	2ND PER	3RD PER	REMARKS
D2.30	D-B		3-3410	M/S-12A-39			X				X									VT-3. M/S-12A-39-SW-R-12C
		TOTAL ID's for D2.30		1 *							1									

NSID COMPONENT SURVEILLANCE SCHEDULE

Effective Date 09/05/89 Process Date 03/09/90

COMPONENT: INTEGRAL ATTACHMENT--SPRING TYPE SUPPORTS

83S	83S		INT		EXAMINATION METHODS			FIRST INTERVAL			SECOND INTERVAL			THIRD INTERVAL			FOURTH INTERVAL			
ITEM NUMBER	CATEGORY NUMBER	DESCRIPTION	SKETCH NUMBER	IDENT. NUMBER	VOL.	SUR.	VIS.	1ST PER	2ND PER	3RD PER	1ST PER	2ND PER	3RD PER	1ST PER	2ND PER	3RD PER	1ST PER	2ND PER	3RD PER	REMARKS
D2.40	D-B		3-3411	SW-H-1			X					/								VT-3
D2.40	D-B		3-3411	SW-H-43			X				X									
D2.40	D-B		3-3412	SW-H-89			X					/								
D2.40	D-B		3-3501	AC-H-542			X				X									
D2.40	D-B		3-3501	AC-H-544			X				X									
D2.40	D-B		3-3504	AC-H-52-6			X						/							
D2.40	D-B		3-3702	V-H-1017-1			X						/							
		TOTAL ID's for D2.40		7 *							3	2	2							

NSID COMPONENT SURVEILLANCE SCHEDULE

Effective Date 09/05/89 Process Date 03/09/90

COMPONENT: PRESSURE RETAINING COMPONENTS

83S	83S		INT		EXAMINATION METHODS			FIRST INTERVAL			SECOND INTERVAL			THIRD INTERVAL			FOURTH INTERVAL			
ITEM NUMBER	CATEGORY NUMBER	DESCRIPTION	SKETCH NUMBER	IDENT. NUMBER	VOL.	SUR.	VIS.	1ST PER	2ND PER	3RD PER	1ST PER	2ND PER	3RD PER	1ST PER	2ND PER	3RD PER	1ST PER	2ND PER	3RD PER	REMARKS
D3.10	D-C		3-9100	13 LEAK			X				/	/								VT-2. REF.TABLE 4.0
D3.10	D-C		3-9600	13 HYDRO			X						/							VT-2. REF.TABLE 4.0
		TOTAL ID's for D3.10		2 *							1	1	1							

NSID COMPONENT SURVEILLANCE SCHEDULE

Effective Date 09/05/89 Process Date 03/09/90

COMPONENT: INTEGRAL ATTACHMENT-COMPONENT SUPPORTS AND RESTRAINT

83S	83S		INT		EXAMINATION METHODS			FIRST INTERVAL			SECOND INTERVAL			THIRD INTERVAL			FOURTH INTERVAL			
ITEM NUMBER	CATEGORY NUMBER	DESCRIPTION	SKETCH NUMBER	IDENT. NUMBER	VOL.	SUR.	VIS.	1ST PER	2ND PER	3RD PER	1ST PER	2ND PER	3RD PER	1ST PER	2ND PER	3RD PER	1ST PER	2ND PER	3RD PER	REMARKS
D3.20	D-C		3-1110	31 SUP			X				X									VT-3
D3.20	D-C		3-3601	ACHR-329-4			X				X									
D3.20	D-C		3-3601	ACHR-329-9			X				X	/								
D3.20	D-C		3-4170	31 SUP			X						/							
D3.20	D-C		3-4170	32 SUP			X						/							
D3.20	D-C		3-4170	STRAINER			X					/								
		TOTAL ID's for D3.20		6 *							3	2	2							

NUCLEAR ENERGY SYSTEMS
FORM D037 08/25/87 Westinghouse Proprietary

NSID COMPONENT SURVEILLANCE SCHEDULE

Effective Date 09/05/89 Process Date 03/09/90

COMPONENT: *** CLASS TOTALS FOR IWD ***

83S	83S		INT		EXAMINATION METHODS			FIRST INTERVAL			SECOND INTERVAL			THIRD INTERVAL			FOURTH INTERVAL			
ITEM NUMBER	CATEGORY NUMBER	DESCRIPTION	SKETCH NUMBER	IDENT. NUMBER	VOL.	SUR.	VIS.	1ST PER	2ND PER	3RD PER	1ST PER	2ND PER	3RD PER	1ST PER	2ND PER	3RD PER	1ST PER	2ND PER	3RD PER	REMARKS
		CLASS TOTAL		167 **							63	60	55							

NSID COMPONENT SURVEILLANCE SCHEDULE

COMPONENT: This Page Intentionally Blank

83S	83S		INT		EXAMINATION METHODS			FIRST INTERVAL			SECOND INTERVAL			THIRD INTERVAL			FOURTH INTERVAL			
ITEM NUMBER	CATEGORY NUMBER	DESCRIPTION	SKETCH NUMBER	IDENT. NUMBER	VOL.	SUR.	VIS.	1ST PER	2ND PER	3RD PER	1ST PER	2ND PER	3RD PER	1ST PER	2ND PER	3RD PER	1ST PER	2ND PER	3RD PER	REMARKS
	This Page	Intentionally Blank																		

INT-ACCOUNTABILITY-IDENT.

Interval = "02" PERIOD = "02" PART 3 Time 16:01:03 Page 1

Effective Date 10/25/89 BY CATEGORY Process Date 03/09/90

Category or Class		ID's	Period 1 Tot	Period 1 /	Period 1 X	Period 1 %	Period 2 Tot	Period 2 /	Period 2 X	Period 2 %	Period 3 Tot	Period 3 /	Period 3 X	Period 3 %
B-A	*	28	2	0	2	22.2	1	1	0	22.2	6	6	0	22.2
B-B	*	8	8	0	8	44.4	5	5	0	44.4	5	5	0	44.4
B-D	*	30	22	0	22	46.8	8	8	0	46.8	17	17	0	46.8
B-E	*	3	0	0	0	0.0	0	0	0	0.0	3	3	0	0.0
B-F	*	22	14	0	14	50.0	5	5	0	50.0	9	9	0	50.0
B-H	*	2	2	0	2	33.3	2	2	0	33.3	2	2	0	33.3
B-J	*	621	75	0	75	41.0	53	53	0	41.0	55	55	0	41.0
B-O	*	33	0	0	0	0.0	0	0	0	0.0	4	4	0	0.0
B-P	*	12	6	0	6	25.0	6	6	0	25.0	12	12	0	25.0
B-Q	*	1	0	0	0	0.0	0	0	0	0.0	0	0	0	0.0
R-G	*	4	1	0	1	25.0	1	1	0	25.0	2	2	0	25.0
B-G-1	*	412	127	0	127	31.3	102	102	0	31.3	177	177	0	31.3
B-G-2	*	642	547	0	547	53.3	229	229	0	53.3	251	251	0	53.3
B-K-1	*	19	4	0	4	21.1	6	6	0	21.1	9	9	0	21.1
B-L-1	*	12	0	0	0	0.0	0	0	0	0.0	3	3	0	0.0
B-L-2	*	4	0	0	0	0.0	0	0	0	0.0	1	1	0	0.0
B-M-2	*	17	4	0	4	66.7	0	0	0	66.7	2	2	0	66.7
B-N-1	*	1	1	0	1	33.3	1	1	0	33.3	1	1	0	33.3
B-N-2	*	2	0	0	0	0.0	0	0	0	0.0	2	2	0	0.0
B-N-3	*	1	0	0	0	0.0	0	0	0	0.0	1	1	0	0.0
Class B	**	1874	813	0	813	45.3	419	419	0	45.3	562	562	0	45.3

FORM 0007 (08/8) Westinghouse Proprietary

INT-ACCOUNTABILITY-IDENT.

Interval = "02" PERIOD = "02" PART 3 Time 16:01:03 Page 2

Effective Date 09/05/89 BY CATEGORY Process Date 03/09/90

Category or Class		ID's	Period 1 Tot	Period 1 /	Period 1 X	Period 1 %	Period 2 Tot	Period 2 /	Period 2 X	Period 2 %	Period 3 Tot	Period 3 /	Period 3 X	Period 3 %
C-A	*	68	45	0	45	43.7	28	28	0	43.7	30	30	0	43.7
C-B	*	28	20	2	18	64.3	2	2	0	64.3	6	6	0	64.3
C-C	*	108	19	0	19	17.9	48	48	0	17.9	39	39	0	17.9
C-D	*	24	0	0	0	0.0	4	4	0	0.0	4	4	0	0.0
C-F	*	790	64	0	64	36.0	60	60	0	36.0	54	54	0	36.0
C-H	*	8	4	4	0	0.0	4	4	0	0.0	8	8	0	0.0
Class C	**	1026	152	6	146	33.3	146	146	0	33.3	141	141	0	33.3

FORM 000/ (08/15/85) Westinghouse Proprietary

INT-ACCOUNTABILITY-IDENT.

Interval = "02" PERIOD = "02" PART 3 Time 16:01:03 Page 3

Effective Date 09/05/89 BY CATEGORY Process Date 03/09/90

Category or Class	ID's	Period 1 Tot	Period 1 /	Period 1 X	Period 1 %	Period 2 Tot	Period 2 /	Period 2 X	Period 2 %	Period 3 Tot	Period 3 /	Period 3 X	Period 3 %
D-A *	5	2	1	1	16.7	2	2	0	16.7	2	2	0	16.7
D-B *	154	57	1	56	34.6	55	55	0	34.6	50	50	0	34.6
D-C *	8	4	1	3	30.0	3	3	0	30.0	3	3	0	30.0
Class D **	167	63	3	60	33.7	60	60	0	33.7	55	55	0	33.7

FORM 0007 ...ingHouse Proprietary

INT-ACCOUNTABILITY-IDENT.

Interval = "02" PERIOD = "02" PART 3 Time 16:01:03 Page 4

Effective Date 06/21/89 BY CATEGORY Process Date 03/09/90

Category or Class	ID's	Period 1 Tot	Period 1 /	Period 1 X	Period 1 %	Period 2 Tot	Period 2 /	Period 2 X	Period 2 %	Period 3 Tot	Period 3 /	Period 3 X	Period 3 %
F-A *	5	2	0	2	28.6	2	2	0	28.6	3	3	0	28.6
F-C *	284	430	0	430	34.3	402	402	0	34.3	420	420	0	34.3
Class F **	289	432	0	432	34.3	404	404	0	34.3	423	423	0	34.3

FORM DU07 (08/15/85) Westinghouse Proprietary

INT-ACCOUNTABILITY-IDENT.

Interval = "02" PERIOD = "02" PART 3 Time 16:01:03 Page 5

Effective Date --N/A-- BY CATEGORY Process Date 03/09/90

Category or Class	ID's	Period 1 Tot	Period 1 /	Period 1 X	Period 1 %	Period 2 Tot	Period 2 /	Period 2 X	Period 2 %	Period 3 Tot	Period 3 /	Period 3 X	Period 3 %
**********		INTERVAL GRAND TOTALS				********							
Total ***	4356	1460	9	1451	39.5	1029	1029	0	39.5	1181	1181	0	39.5

FORM D007 (08/ Westinghouse Proprietary

FORM 0007 (08/15/85) Westinghouse Proprietary

INT-ACCOUNTABILITY-IDENT.

Interval = "02" PERIOD = "02" PART 2 Time 16:01:03 Page 6

Effective Date 06/21/89 BY ITEM Process Date 03/09/90

Item/Cat or Class	ID's	-----Period 1------				-----Period 2------				-----Period 3------			
		Tot	/	X	%	Tot	/	X	%	Tot	/	X	%
F1.30 *	5	2	0	2	28.6	2	2	0	28.6	3	3	0	28.6
F-A **	5	2	0	2	28.6	2	2	0	28.6	3	3	0	28.6
F3.10 *	1284	430	0	430	34.3	402	402	0	34.3	420	420	0	34.3
F-C **	1284	430	0	430	34.3	402	402	0	34.3	420	420	0	34.3
Class F ***	1289	432	0	432	34.3	404	404	0	34.3	423	423	0	34.3

FORM D007 10 ...nghouse Proprietary

INT-ACCOUNTABILITY-IDENT.

Interval = "02" PERIOD = "02" PART 2 Time 16:01:03 Page 7

Effective Date --N/A-- BY ITEM Process Date 03/09/90

Item/Cat or Class		ID's	Period 1 Tot	Period 1 /	Period 1 X	Period 1 %	Period 2 Tot	Period 2 /	Period 2 X	Period 2 %	Period 3 Tot	Period 3 /	Period 3 X	Period 3 %
	**********		INTERVAL GRAND TOTALS				********							
Total	****	4356	1460	9	1451	39.5	1029	1029	0	39.5	1181	1181	0	39.5

FORM D007 (08/15/85) Westinghouse Proprietary

INT-ACCOUNTABILITY-IDENT.

Interval = "02" PERIOD = "02" PART 2 Time 16:01:03 Page 4

Effective Date 09/05/89 BY ITEM Process Date 03/09/90

Item/Cat or Class		ID's	Period 1 Tot	Period 1 /	Period 1 X	Period 1 %	Period 2 Tot	Period 2 /	Period 2 X	Period 2 %	Period 3 Tot	Period 3 /	Period 3 X	Period 3 %
C1.10	*	25	20	0	20	47.6	11	11	0	47.6	11	11	0	47.6
C1.20	*	33	20	0	20	37.7	16	16	0	37.7	17	17	0	37.7
C1.30	*	10	5	0	5	62.5	1	1	0	62.5	2	2	0	62.5
C-A	**	68	45	0	45	43.7	28	28	0	43.7	30	30	0	43.7
C2.21	*	8	8	0	8	80.0	1	1	0	80.0	1	1	0	80.0
C2.22	*	8	8	0	8	80.0	1	1	0	80.0	1	1	0	80.0
C2.31	*	6	2	0	2	50.0	0	0	0	50.0	2	2	0	50.0
C2.33	*	6	2	2	0	0.0	0	0	0	0.0	2	2	0	0.0
C-B	**	28	20	2	18	64.3	2	2	0	64.3	6	6	0	64.3
C3.10	*	4	1	0	1	50.0	0	0	0	50.0	1	1	0	50.0
C3.20	*	104	18	0	18	17.3	48	48	0	17.3	38	38	0	17.3
C-C	**	108	19	0	19	17.9	48	48	0	17.9	39	39	0	17.9
C4.30	*	24	0	0	0	0.0	4	4	0	0.0	4	4	0	0.0
C-D	**	24	0	0	0	0.0	4	4	0	0.0	4	4	0	0.0
C5.11	*	387	27	0	27	33.3	27	27	0	33.3	27	27	0	33.3
C5.12	*	24	2	0	2	33.3	2	2	0	33.3	2	2	0	33.3
C5.21	*	343	32	0	32	40.0	26	26	0	40.0	22	22	0	40.0
C5.22	*	8	1	0	1	20.0	3	3	0	20.0	1	1	0	20.0
C5.31	*	28	2	0	2	33.3	2	2	0	33.3	2	2	0	33.3
C-F	**	790	64	0	64	36.0	60	60	0	36.0	54	54	0	36.0
C7.10	*	1	1	1	0	0.0	1	1	0	0.0	1	1	0	0.0
C7.20	*	1	0	0	0	0.0	0	0	0	0.0	1	1	0	0.0
C7.30	*	1	1	1	0	0.0	1	1	0	0.0	1	1	0	0.0
C7.40	*	1	0	0	0	0.0	0	0	0	0.0	1	1	0	0.0
C7.50	*	1	1	1	0	0.0	1	1	0	0.0	1	1	0	0.0
C7.60	*	1	0	0	0	0.0	0	0	0	0.0	1	1	0	0.0
C7.70	*	1	1	1	0	0.0	1	1	0	0.0	1	1	0	0.0
C7.80	*	1	0	0	0	0.0	0	0	0	0.0	1	1	0	0.0
C-H	**	8	4	4	0	0.0	4	4	0	0.0	8	8	0	0.0
Class C	***	1026	152	6	146	33.3	146	146	0	33.3	141	141	0	33.3

FORM D007 (08) Westinghouse Proprietary

INT-ACCOUNTABILITY-IDENT.

Interval = "02" PERIOD = "02" PART 2 Time 16:01:03 Page 5

Effective Date 09/05/89 BY ITEM Process Date 03/09/90

Item/Cat or Class	ID's	Period 1 Tot	Period 1 /	Period 1 X	Period 1 %	Period 2 Tot	Period 2 /	Period 2 X	Period 2 %	Period 3 Tot	Period 3 /	Period 3 X	Period 3 %
D1.10 *	2	1	1	0	0.0	1	1	0	0.0	1	1	0	0.0
D1.20 *	3	1	0	1	33.3	1	1	0	33.3	1	1	0	33.3
D-A **	5	2	1	1	16.7	2	2	0	16.7	2	2	0	16.7
D2.10 *	2	1	1	0	0.0	1	1	0	0.0	1	1	0	0.0
D2.20 *	144	52	0	52	34.4	52	52	0	34.4	47	47	0	34.4
D2.30 *	1	1	0	1	100.0	0	0	0	100.0	0	0	0	100.0
D2.40 *	7	3	0	3	42.9	2	2	0	42.9	2	2	0	42.9
D-B **	154	57	1	56	34.6	55	55	0	34.6	50	50	0	34.6
D3.10 *	2	1	1	0	0.0	1	1	0	0.0	1	1	0	0.0
D3.20 *	6	3	0	3	42.9	2	2	0	42.9	2	2	0	42.9
D-C **	8	4	1	3	30.0	3	3	0	30.0	3	3	0	30.0
Class D ***	167	63	3	60	33.7	60	60	0	33.7	55	55	0	33.7

FORM D007 (08/15/85) Westinghouse Proprietary

INT-ACCOUNTABILITY-IDENT.

Interval = "02" PERIOD = "02" PART 2 Time 16:01:03 Page 2

Effective Date 10/25/89 BY ITEM Process Date 03/09/90

Item/Cat or Class		ID's	Period 1 Tot	/	X	%	Period 2 Tot	/	X	%	Period 3 Tot	/	X	%
B6.200	*	96	24	0	24	25.0	24	24	0	25.0	48	48	0	25.0
B-G-1	**	412	127	0	127	31.3	102	102	0	31.3	177	177	0	31.3
B7.20	*	16	5	0	5	31.3	5	5	0	31.3	6	6	0	31.3
B7.30	*	512	512	0	512	57.1	192	192	0	57.1	192	192	0	57.1
B7.50	*	7	3	0	3	37.5	2	2	0	37.5	3	3	0	37.5
B7.60	*	72	18	0	18	25.0	18	18	0	25.0	36	36	0	25.0
B7.70	*	30	8	0	8	26.7	10	10	0	26.7	12	12	0	26.7
B7.80	*	5	1	0	1	20.0	2	2	0	20.0	2	2	0	20.0
B-G-2	**	642	547	0	547	53.3	229	229	0	53.3	251	251	0	53.3
B8.20	*	2	2	0	2	33.3	2	2	0	33.3	2	2	0	33.3
B-H	**	2	2	0	2	33.3	2	2	0	33.3	2	2	0	33.3
B9.11	*	170	21	0	21	41.2	15	15	0	41.2	15	15	0	41.2
B9.12	*	16	2	0	2	50.0	0	0	0	50.0	2	2	0	50.0
B9.21	*	85	11	0	11	42.3	8	8	0	42.3	7	7	0	42.3
B9.31	*	10	1	0	1	33.3	1	1	0	33.3	1	1	0	33.3
B9.32	*	27	2	0	2	28.6	2	2	0	28.6	3	3	0	28.6
B9.40	*	313	38	0	38	41.3	27	27	0	41.3	27	27	0	41.3
B-J	**	621	75	0	75	41.0	53	53	0	41.0	55	55	0	41.0
B10.10	*	7	1	0	1	14.3	3	3	0	14.3	3	3	0	14.3
B10.20	*	12	3	0	3	25.0	3	3	0	25.0	6	6	0	25.0
B-K-1	**	19	4	0	4	21.1	6	6	0	21.1	9	9	0	21.1
B12.10	*	12	0	0	0	0.0	0	0	0	0.0	3	3	0	0.0
B-L-1	**	12	0	0	0	0.0	0	0	0	0.0	3	3	0	0.0
B12.20	*	4	0	0	0	0.0	0	0	0	0.0	1	1	0	0.0
B-L-2	**	4	0	0	0	0.0	0	0	0	0.0	1	1	0	0.0
B12.50	*	17	4	0	4	66.7	0	0	0	66.7	2	2	0	66.7
B-M-2	**	17	4	0	4	66.7	0	0	0	66.7	2	2	0	66.7
B13.10	*	1	1	0	1	33.3	1	1	0	33.3	1	1	0	33.3
B-N-1	**	1	1	0	1	33.3	1	1	0	33.3	1	1	0	33.3
B13.50	*	1	0	0	0	0.0	0	0	0	0.0	1	1	0	0.0
B13.60	*	1	0	0	0	0.0	0	0	0	0.0	1	1	0	0.0

FORM D007 ...inghouse Proprietary

INT-ACCOUNTABILITY-IDENT.

Interval = "02" PERIOD = "02" PART 2 Time 16:01:03 Page 3

Effective Date 10/25/89 BY ITEM Process Date 03/09/90

Item/Cat or Class	ID's	Period 1 Tot	Period 1 /	Period 1 X	Period 1 %	Period 2 Tot	Period 2 /	Period 2 X	Period 2 %	Period 3 Tot	Period 3 /	Period 3 X	Period 3 %
B-N-2 **	2	0	0	0	0.0	0	0	0	0.0	2	2	0	0.0
B13.70 *	1	0	0	0	0.0	0	0	0	0.0	1	1	0	0.0
B-N-3 **	1	0	0	0	0.0	0	0	0	0.0	1	1	0	0.0
B14.10 *	33	0	0	0	0.0	0	0	0	0.0	4	4	0	0.0
B-0 **	33	0	0	0	0.0	0	0	0	0.0	4	4	0	0.0
B15.10 *	1	1	0	1	33.3	1	1	0	33.3	1	1	0	33.3
B15.11 *	1	0	0	0	0.0	0	0	0	0.0	1	1	0	0.0
B15.20 *	1	1	0	1	33.3	1	1	0	33.3	1	1	0	33.3
B15.21 *	1	0	0	0	0.0	0	0	0	0.0	1	1	0	0.0
B15.30 *	1	1	0	1	33.3	1	1	0	33.3	1	1	0	33.3
B15.31 *	1	0	0	0	0.0	0	0	0	0.0	1	1	0	0.0
B15.50 *	1	1	0	1	33.3	1	1	0	33.3	1	1	0	33.3
B15.51 *	1	0	0	0	0.0	0	0	0	0.0	1	1	0	0.0
B15.60 *	1	1	0	1	33.3	1	1	0	33.3	1	1	0	33.3
B15.61 *	1	0	0	0	0.0	0	0	0	0.0	1	1	0	0.0
B15.70 *	1	1	0	1	33.3	1	1	0	33.3	1	1	0	33.3
B15.71 *	1	0	0	0	0.0	0	0	0	0.0	1	1	0	0.0
B-P **	12	6	0	6	25.0	6	6	0	25.0	12	12	0	25.0
B16.20 *	1	0	0	0	0.0	0	0	0	0.0	0	0	0	0.0
B-Q **	1	0	0	0	0.0	0	0	0	0.0	0	0	0	0.0
Class B ***	1874	813	0	813	45.3	419	419	0	45.3	562	562	0	45.3

FORM D007 (08/15/85) Westinghouse Proprietary

INT-ACCOUNTABILITY-IDENT.

Interval = "02" PERIOD = "02" PART 1 Time 16:01:03 Page 19

Effective Date --N/A-- BY SKETCH Process Date 03/09/90

Sketch/Item or Class	ID's	-----Period 1-----				-----Period 2-----				-----Period 3-----			
		Tot	/	X	%	Tot	/	X	%	Tot	/	X	%
**********		INTERVAL GRAND TOTALS				********							
Total ****	4356	1460	9	1451	39.5	1029	1029	0	39.5	1181	1181	0	39.5

FORM D007 (0... ...ngHouse Proprietary

INT-ACCOUNTABILITY-IDENT.

Interval = "02" PERIOD = "02" PART 2 Time 16:01:03 Page 1

Effective Date 10/25/89 BY ITEM Process Date 03/09/90

Item/Cat or Class		ID's	Period 1 Tot	/	X	%	Period 2 Tot	/	X	%	Period 3 Tot	/	X	%
B1.11	*	2	0	0	0	0.0	0	0	0	0.0	1	1	0	0.0
B1.12	*	9	0	0	0	0.0	0	0	0	0.0	1	1	0	0.0
B-A	**	11	0	0	0	0.0	0	0	0	0.0	2	2	0	0.0
BRG1.14	*	4	1	0	1	25.0	1	1	0	25.0	2	2	0	25.0
R-G	**	4	1	0	1	25.0	1	1	0	25.0	2	2	0	25.0
B1.21	*	3	0	0	0	0.0	0	0	0	0.0	1	1	0	0.0
B1.22	*	12	0	0	0	0.0	0	0	0	0.0	1	1	0	0.0
B1.30	*	1	1	0	1	50.0	0	0	0	50.0	1	1	0	50.0
B1.40	*	1	1	0	1	33.3	1	1	0	33.3	1	1	0	33.3
B-A	**	17	2	0	2	28.6	1	1	0	28.6	4	4	0	28.6
B2.11	*	2	2	0	2	33.3	2	2	0	33.3	2	2	0	33.3
B2.12	*	2	2	0	2	33.3	2	2	0	33.3	2	2	0	33.3
B2.40	*	4	4	0	4	66.7	1	1	0	66.7	1	1	0	66.7
B-B	**	8	8	0	8	44.4	5	5	0	44.4	5	5	0	44.4
B3.90	*	8	4	0	4	50.0	0	0	0	50.0	4	4	0	50.0
B3.100	*	8	4	0	4	50.0	0	0	0	50.0	4	4	0	50.0
B3.120	*	6	6	0	6	33.3	6	6	0	33.3	6	6	0	33.3
B3.140	*	8	8	0	8	61.5	2	2	0	61.5	3	3	0	61.5
B-D	**	30	22	0	22	46.8	8	8	0	46.8	17	17	0	46.8
B4.12	*	1	0	0	0	0.0	0	0	0	0.0	1	1	0	0.0
B4.13	*	1	0	0	0	0.0	0	0	0	0.0	1	1	0	0.0
B4.20	*	1	0	0	0	0.0	0	0	0	0.0	1	1	0	0.0
B-E	**	3	0	0	0	0.0	0	0	0	0.0	3	3	0	0.0
B5.10	*	8	4	0	4	50.0	0	0	0	50.0	4	4	0	50.0
B5.40	*	6	2	0	2	33.3	2	2	0	33.3	2	2	0	33.3
B5.70	*	8	8	0	8	57.1	3	3	0	57.1	3	3	0	57.1
B-F	**	22	14	0	14	50.0	5	5	0	50.0	9	9	0	50.0
B6.10	*	54	18	0	18	33.3	18	18	0	33.3	18	18	0	33.3
B6.30	*	54	18	0	18	33.3	18	18	0	33.3	18	18	0	33.3
B6.40	*	54	27	0	27	50.0	0	0	0	50.0	27	27	0	50.0
B6.50	*	54	18	0	18	33.3	18	18	0	33.3	18	18	0	33.3
B6.180	*	96	22	0	22	23.4	24	24	0	23.4	48	48	0	23.4
B6.190	*	4	0	0	0	0.0	0	0	0	0.0	0	0	0	0.0

FORM D007 (08/3/85) Westinghouse Proprietary

INT-ACCOUNTABILITY-IDENT.

Interval = "02" PERIOD = "02" PART 1 Time 16:01:03 Page 17

Effective Date 09/05/89 BY SKETCH Process Date 03/09/90

Sketch/Item or Class	ID's	Period 1 Tot	Period 1 /	Period 1 X	Period 1 %	Period 2 Tot	Period 2 /	Period 2 X	Period 2 %	Period 3 Tot	Period 3 /	Period 3 X	Period 3 %
3-4110 **	3	3	0	3	100.0	0	0	0	100.0	0	0	0	100.0
D2.20 *	2	0	0	0	0.0	0	0	0	0.0	2	2	0	0.0
3-4120 **	2	0	0	0	0.0	0	0	0	0.0	2	2	0	0.0
D2.20 *	3	0	0	0	0.0	3	3	0	0.0	0	0	0	0.0
3-4130 **	3	0	0	0	0.0	3	3	0	0.0	0	0	0	0.0
D2.20 *	2	0	0	0	0.0	2	2	0	0.0	0	0	0	0.0
3-4140 **	2	0	0	0	0.0	2	2	0	0.0	0	0	0	0.0
D2.20 *	1	0	0	0	0.0	1	1	0	0.0	0	0	0	0.0
3-4150 **	1	0	0	0	0.0	1	1	0	0.0	0	0	0	0.0
D2.20 *	4	0	0	0	0.0	0	0	0	0.0	4	4	0	0.0
3-4160 **	4	0	0	0	0.0	0	0	0	0.0	4	4	0	0.0
D3.20 *	3	0	0	0	0.0	1	1	0	0.0	2	2	0	0.0
3-4170 **	3	0	0	0	0.0	1	1	0	0.0	2	2	0	0.0
D2.20 *	3	0	0	0	0.0	0	0	0	0.0	3	3	0	0.0
3-4180 **	3	0	0	0	0.0	0	0	0	0.0	3	3	0	0.0
D2.20 *	3	3	0	3	50.0	0	0	0	50.0	3	3	0	50.0
3-4190 **	3	3	0	3	50.0	0	0	0	50.0	3	3	0	50.0
D1.10 *	1	1	1	0	0.0	1	1	0	0.0	0	0	0	0.0
D2.10 *	1	1	1	0	0.0	1	1	0	0.0	0	0	0	0.0
D3.10 *	1	1	1	0	0.0	1	1	0	0.0	0	0	0	0.0
3-9100 **	3	3	3	0	0.0	3	3	0	0.0	0	0	0	0.0
D1.10 *	1	0	0	0	0.0	0	0	0	0.0	1	1	0	0.0
D2.10 *	1	0	0	0	0.0	0	0	0	0.0	1	1	0	0.0
D3.10 *	1	0	0	0	0.0	0	0	0	0.0	1	1	0	0.0
3-9600 **	3	0	0	0	0.0	0	0	0	0.0	3	3	0	0.0
Class D ***	167	63	3	60	33.7	60	60	0	33.7	55	55	0	33.7

FORM D007 (08/ ...ghouse Proprietary

INT-ACCOUNTABILITY-IDENT.

Interval = "02" PERIOD = "02" PART 1 Time 16:01:03 Page 18

Effective Date 06/21/89 BY SKETCH Process Date 03/09/90

Sketch/Item or Class	ID's	Period 1 Tot	Period 1 /	Period 1 X	Period 1 %	Period 2 Tot	Period 2 /	Period 2 X	Period 2 %	Period 3 Tot	Period 3 /	Period 3 X	Period 3 %
F1.30 *	5	2	0	2	28.6	2	2	0	28.6	3	3	0	28.6
F3.10 *	1284	430	0	430	34.3	402	402	0	34.3	420	420	0	34.3
F-1000 **	1289	432	0	432	34.3	404	404	0	34.3	423	423	0	34.3
Class F ***	1289	432	0	432	34.3	404	404	0	34.3	423	423	0	34.3

FORM 0007 (08/15/85) Westinghouse Proprietary

INT-ACCOUNTABILITY-IDENT.

Interval = "02" PERIOD = "02" PART 1 Time 16:01:03 Page 15

Effective Date 09/05/89 BY SKETCH Process Date 03/09/90

Sketch/Item or Class		ID's	Period 1 Tot	Period 1 /	Period 1 X	Period 1 %	Period 2 Tot	Period 2 /	Period 2 X	Period 2 %	Period 3 Tot	Period 3 /	Period 3 X	Period 3 %
3-1230	**	1	0	0	0	0.0	0	0	0	0.0	1	1	0	0.0
D2.20	*	1	0	0	0	0.0	0	0	0	0.0	1	1	0	0.0
3-1300	**	1	0	0	0	0.0	0	0	0	0.0	1	1	0	0.0
D1.20	*	3	1	0	1	33.3	1	1	0	33.3	1	1	0	33.3
3-1520	**	3	1	0	1	33.3	1	1	0	33.3	1	1	0	33.3
D2.20	*	3	0	0	0	0.0	3	3	0	0.0	0	0	0	0.0
3-1530	**	3	0	0	0	0.0	3	3	0	0.0	0	0	0	0.0
D2.20	*	2	0	0	0	0.0	0	0	0	0.0	2	2	0	0.0
3-1540	**	2	0	0	0	0.0	0	0	0	0.0	2	2	0	0.0
D2.20	*	1	1	0	1	50.0	1	1	0	50.0	0	0	0	50.0
3-3402	**	1	1	0	1	50.0	1	1	0	50.0	0	0	0	50.0
D2.20	*	1	0	0	0	0.0	1	1	0	0.0	0	0	0	0.0
3-3403	**	1	0	0	0	0.0	1	1	0	0.0	0	0	0	0.0
D2.20	*	1	0	0	0	0.0	1	1	0	0.0	0	0	0	0.0
3-3407	**	1	0	0	0	0.0	1	1	0	0.0	0	0	0	0.0
D2.20	*	7	7	0	7	100.0	0	0	0	100.0	0	0	0	100.0
3-3409	**	7	7	0	7	100.0	0	0	0	100.0	0	0	0	100.0
D2.20	*	13	11	0	11	84.6	2	2	0	84.6	0	0	0	84.6
D2.30	*	1	1	0	1	100.0	0	0	0	100.0	0	0	0	100.0
3-3410	**	14	12	0	12	85.7	2	2	0	85.7	0	0	0	85.7
D2.20	*	13	6	0	6	46.2	1	1	0	46.2	6	6	0	46.2
D2.40	*	2	1	0	1	50.0	1	1	0	50.0	0	0	0	50.0
3-3411	**	15	7	0	7	46.7	2	2	0	46.7	6	6	0	46.7
D2.20	*	10	0	0	0	0.0	10	10	0	0.0	0	0	0	0.0
D2.40	*	1	0	0	0	0.0	1	1	0	0.0	0	0	0	0.0
3-3412	**	11	0	0	0	0.0	11	11	0	0.0	0	0	0	0.0
D2.20	*	8	0	0	0	0.0	8	8	0	0.0	0	0	0	0.0
3-3413	**	8	0	0	0	0.0	8	8	0	0.0	0	0	0	0.0
D2.20	*	10	0	0	0	0.0	10	10	0	0.0	0	0	0	0.0

FORM D007 (08/1 Westinghouse Proprietary

INT-ACCOUNTABILITY-IDENT.

Interval = "02" PERIOD = "02" PART 1 Time 16:01:03 Page 16

Effective Date 09/05/89 BY SKETCH Process Date 03/09/90

Sketch/Item or Class		ID's	Period 1 Tot	Period 1 /	Period 1 X	Period 1 %	Period 2 Tot	Period 2 /	Period 2 X	Period 2 %	Period 3 Tot	Period 3 /	Period 3 X	Period 3 %
3-3414	**	10	0	0	0	0.0	10	10	0	0.0	0	0	0	0.0
D2.20	*	5	3	0	3	60.0	0	0	0	60.0	2	2	0	60.0
3-3500	**	5	3	0	3	60.0	0	0	0	60.0	2	2	0	60.0
D2.40	*	2	2	0	2	100.0	0	0	0	100.0	0	0	0	100.0
3-3501	**	2	2	0	2	100.0	0	0	0	100.0	0	0	0	100.0
D2.20	*	3	3	0	3	100.0	0	0	0	100.0	0	0	0	100.0
D2.40	*	1	0	0	0	0.0	0	0	0	0.0	1	1	0	0.0
3-3504	**	4	3	0	3	75.0	0	0	0	75.0	1	1	0	75.0
D2.20	*	1	0	0	0	0.0	0	0	0	0.0	1	1	0	0.0
3-3508	**	1	0	0	0	0.0	0	0	0	0.0	1	1	0	0.0
D2.20	*	2	0	0	0	0.0	0	0	0	0.0	2	2	0	0.0
3-3509	**	2	0	0	0	0.0	0	0	0	0.0	2	2	0	0.0
D3.20	*	2	2	0	2	66.7	1	1	0	66.7	0	0	0	66.7
3-3601	**	2	2	0	2	66.7	1	1	0	66.7	0	0	0	66.7
D2.20	*	3	0	0	0	0.0	0	0	0	0.0	3	3	0	0.0
3-3700	**	3	0	0	0	0.0	0	0	0	0.0	3	3	0	0.0
D2.20	*	4	0	0	0	0.0	0	0	0	0.0	4	4	0	0.0
3-3701	**	4	0	0	0	0.0	0	0	0	0.0	4	4	0	0.0
D2.20	*	2	0	0	0	0.0	0	0	0	0.0	2	2	0	0.0
D2.40	*	1	0	0	0	0.0	0	0	0	0.0	1	1	0	0.0
3-3702	**	3	0	0	0	0.0	0	0	0	0.0	3	3	0	0.0
D2.20	*	2	0	0	0	0.0	0	0	0	0.0	2	2	0	0.0
3-3703	**	2	0	0	0	0.0	0	0	0	0.0	2	2	0	0.0
D2.20	*	1	0	0	0	0.0	0	0	0	0.0	1	1	0	0.0
3-3705	**	1	0	0	0	0.0	0	0	0	0.0	1	1	0	0.0
D2.20	*	3	3	0	3	50.0	0	0	0	50.0	3	3	0	50.0
3-4100	**	3	3	0	3	50.0	0	0	0	50.0	3	3	0	50.0
D2.20	*	3	3	0	3	100.0	0	0	0	100.0	0	0	0	100.0

FORM D007 (08/15/85) Westinghouse Proprietary

INT-ACCOUNTABILITY-IDENT.

Interval = "02" PERIOD = "02" PART 1 Time 16:01:03 Page 13

Effective Date 09/05/89 BY SKETCH Process Date 03/09/90

Sketch/Item or Class		ID's	-----Period 1------				-----Period 2------				-----Period 3------			
			Tot	/	X	%	Tot	/	X	%	Tot	/	X	%
2-2533	**	11	1	0	1	25.0	3	3	0	25.0	0	0	0	25.0
C5.11	*	35	4	0	4	44.4	5	5	0	44.4	0	0	0	44.4
2-2540	**	35	4	0	4	44.4	5	5	0	44.4	0	0	0	44.4
C5.21	*	37	2	0	2	33.3	0	0	0	33.3	4	4	0	33.3
C5.22	*	1	0	0	0	0.0	0	0	0	0.0	1	1	0	0.0
2-2541	**	38	2	0	2	28.6	0	0	0	28.6	5	5	0	28.6
C5.21	*	30	4	0	4	36.4	4	4	0	36.4	3	3	0	36.4
2-2542	**	30	4	0	4	36.4	4	4	0	36.4	3	3	0	36.4
C3.20	*	2	0	0	0	0.0	0	0	0	0.0	2	2	0	0.0
C5.11	*	23	0	0	0	0.0	0	0	0	0.0	4	4	0	0.0
2-2543	**	25	0	0	0	0.0	0	0	0	0.0	6	6	0	0.0
C4.30	*	24	0	0	0	0.0	4	4	0	0.0	4	4	0	0.0
2-3130	**	24	0	0	0	0.0	4	4	0	0.0	4	4	0	0.0
C7.10	*	1	1	1	0	0.0	1	1	0	0.0	1	1	0	0.0
C7.30	*	1	1	1	0	0.0	1	1	0	0.0	1	1	0	0.0
C7.50	*	1	1	1	0	0.0	1	1	0	0.0	1	1	0	0.0
C7.70	*	1	1	1	0	0.0	1	1	0	0.0	1	1	0	0.0
2-9100	**	4	4	4	0	0.0	4	4	0	0.0	4	4	0	0.0
C7.20	*	1	0	0	0	0.0	0	0	0	0.0	1	1	0	0.0
C7.40	*	1	0	0	0	0.0	0	0	0	0.0	1	1	0	0.0
C7.60	*	1	0	0	0	0.0	0	0	0	0.0	1	1	0	0.0
C7.80	*	1	0	0	0	0.0	0	0	0	0.0	1	1	0	0.0
2-9600	**	4	0	0	0	0.0	0	0	0	0.0	4	4	0	0.0
Class C	***	1026	152	6	146	33.3	146	146	0	33.3	141	141	0	33.3

FORM 0007 (08/ Westinghouse Proprietary

INT-ACCOUNTABILITY-IDENT.

Interval = "02" PERIOD = "02" PART 1 Time 16:01:03 Page 14

Effective Date 09/05/89 BY SKETCH Process Date 03/09/90

Sketch/Item or Class		ID's	Period 1 Tot	/	X	%	Period 2 Tot	/	X	%	Period 3 Tot	/	X	%
D2.20	*	2	0	0	0	0.0	2	2	0	0.0	0	0	0	0.0
3-1100	**	2	0	0	0	0.0	2	2	0	0.0	0	0	0	0.0
D3.20	*	1	1	0	1	100.0	0	0	0	100.0	0	0	0	100.0
3-1110	**	1	1	0	1	100.0	0	0	0	100.0	0	0	0	100.0
D2.20	*	1	1	0	1	100.0	0	0	0	100.0	0	0	0	100.0
3-1120	**	1	1	0	1	100.0	0	0	0	100.0	0	0	0	100.0
D2.20	*	1	1	0	1	100.0	0	0	0	100.0	0	0	0	100.0
3-1130	**	1	1	0	1	100.0	0	0	0	100.0	0	0	0	100.0
D2.20	*	2	2	0	2	100.0	0	0	0	100.0	0	0	0	100.0
3-1140	**	2	2	0	2	100.0	0	0	0	100.0	0	0	0	100.0
D2.20	*	1	0	0	0	0.0	1	1	0	0.0	0	0	0	0.0
3-1150	**	1	0	0	0	0.0	1	1	0	0.0	0	0	0	0.0
D2.20	*	6	6	0	6	100.0	0	0	0	100.0	0	0	0	100.0
3-1160	**	6	6	0	6	100.0	0	0	0	100.0	0	0	0	100.0
D2.20	*	4	2	0	2	50.0	2	2	0	50.0	0	0	0	50.0
3-1170	**	4	2	0	2	50.0	2	2	0	50.0	0	0	0	50.0
D2.20	*	2	0	0	0	0.0	2	2	0	0.0	0	0	0	0.0
3-1180	**	2	0	0	0	0.0	2	2	0	0.0	0	0	0	0.0
D2.20	*	2	0	0	0	0.0	2	2	0	0.0	0	0	0	0.0
3-1190	**	2	0	0	0	0.0	2	2	0	0.0	0	0	0	0.0
D2.20	*	2	0	0	0	0.0	0	0	0	0.0	2	2	0	0.0
3-1200	**	2	0	0	0	0.0	0	0	0	0.0	2	2	0	0.0
D2.20	*	2	0	0	0	0.0	0	0	0	0.0	2	2	0	0.0
3-1210	**	2	0	0	0	0.0	0	0	0	0.0	2	2	0	0.0
D2.20	*	1	0	0	0	0.0	0	0	0	0.0	1	1	0	0.0
3-1220	**	1	0	0	0	0.0	0	0	0	0.0	1	1	0	0.0
D2.20	*	1	0	0	0	0.0	0	0	0	0.0	1	1	0	0.0

FORM D007 (08/15/85) Westinghouse Proprietary

INT-ACCOUNTABILITY-IDENT.

Interval = "02" PERIOD = "02" PART 1 Time 16:01:03 Page 11

Effective Date 09/05/89 BY SKETCH Process Date 03/09/90

Sketch/Item or Class		ID's	Period 1 Tot	Period 1 /	Period 1 X	Period 1 %	Period 2 Tot	Period 2 /	Period 2 X	Period 2 %	Period 3 Tot	Period 3 /	Period 3 X	Period 3 %
C3.20	*	9	3	0	3	33.3	3	3	0	33.3	3	3	0	33.3
C5.21	*	15	1	0	1	33.3	2	2	0	33.3	0	0	0	33.3
C5.22	*	2	0	0	0	0.0	1	1	0	0.0	0	0	0	0.0
2-2300	**	26	4	0	4	30.8	6	6	0	30.8	3	3	0	30.8
C3.20	*	4	1	0	1	25.0	0	0	0	25.0	3	3	0	25.0
C5.11	*	7	0	0	0	0.0	0	0	0	0.0	2	2	0	0.0
C5.21	*	19	0	0	0	0.0	0	0	0	0.0	2	2	0	0.0
C5.31	*	7	0	0	0	0.0	0	0	0	0.0	2	2	0	0.0
2-2301	**	37	1	0	1	10.0	0	0	0	10.0	9	9	0	10.0
C3.20	*	10	4	0	4	40.0	0	0	0	40.0	6	6	0	40.0
C5.21	*	18	3	0	3	75.0	0	0	0	75.0	1	1	0	75.0
2-2302	**	28	7	0	7	50.0	0	0	0	50.0	7	7	0	50.0
C3.20	*	10	3	0	3	30.0	0	0	0	30.0	7	7	0	30.0
C5.21	*	13	1	0	1	33.3	0	0	0	33.3	2	2	0	33.3
2-2400	**	23	4	0	4	30.8	0	0	0	30.8	9	9	0	30.8
C3.20	*	2	1	0	1	50.0	0	0	0	50.0	1	1	0	50.0
C5.11	*	7	0	0	0	0.0	0	0	0	0.0	0	0	0	0.0
C5.21	*	17	2	0	2	33.3	4	4	0	33.3	0	0	0	33.3
C5.31	*	7	0	0	0	0.0	2	2	0	0.0	0	0	0	0.0
2-2401	**	33	3	0	3	30.0	6	6	0	30.0	1	1	0	30.0
C3.20	*	11	4	0	4	36.4	0	0	0	36.4	7	7	0	36.4
C5.21	*	20	5	0	5	100.0	0	0	0	100.0	0	0	0	100.0
2-2402	**	31	9	0	9	56.3	0	0	0	56.3	7	7	0	56.3
C5.11	*	60	5	0	5	35.7	6	6	0	35.7	3	3	0	35.7
C5.12	*	18	2	0	2	50.0	0	0	0	50.0	2	2	0	50.0
2-2500	**	78	7	0	7	38.9	6	6	0	38.9	5	5	0	38.9
C5.11	*	37	4	0	4	100.0	0	0	0	100.0	0	0	0	100.0
C5.12	*	3	0	0	0	0.0	0	0	0	0.0	0	0	0	0.0
2-2510	**	40	4	0	4	100.0	0	0	0	100.0	0	0	0	100.0
C3.20	*	2	0	0	0	0.0	0	0	0	0.0	2	2	0	0.0
C5.11	*	33	4	0	4	57.1	3	3	0	57.1	0	0	0	57.1
C5.12	*	3	0	0	0	0.0	2	2	0	0.0	0	0	0	0.0

FORM D007 (08/1 Westinghouse Proprietary

INT-ACCOUNTABILITY-IDENT.

Interval = "02" PERIOD = "02" PART 1 Time 16:01:03 Page 12

Effective Date 09/05/89 BY SKETCH Process Date 03/09/90

Sketch/Item or Class		ID's	Period 1 Tot	Period 1 /	Period 1 X	Period 1 %	Period 2 Tot	Period 2 /	Period 2 X	Period 2 %	Period 3 Tot	Period 3 /	Period 3 X	Period 3 %
2-2511	**	38	4	0	4	36.4	5	5	0	36.4	2	2	0	36.4
C3.20	*	1	0	0	0	0.0	1	1	0	0.0	0	0	0	0.0
C5.11	*	35	2	0	2	28.6	3	3	0	28.6	2	2	0	28.6
2-2512	**	36	2	0	2	25.0	4	4	0	25.0	2	2	0	25.0
C5.11	*	27	2	0	2	25.0	2	2	0	25.0	4	4	0	25.0
2-2520	**	27	2	0	2	25.0	2	2	0	25.0	4	4	0	25.0
C3.20	*	2	0	0	0	0.0	2	2	0	0.0	0	0	0	0.0
C5.11	*	24	0	0	0	0.0	3	3	0	0.0	0	0	0	0.0
C5.21	*	6	0	0	0	0.0	0	0	0	0.0	2	2	0	0.0
2-2521	**	32	0	0	0	0.0	5	5	0	0.0	2	2	0	0.0
C5.11	*	5	2	0	2	50.0	0	0	0	50.0	2	2	0	50.0
C5.21	*	9	2	0	2	66.7	1	1	0	66.7	0	0	0	66.7
C5.22	*	4	0	0	0	0.0	2	2	0	0.0	0	0	0	0.0
2-2522	**	18	4	0	4	44.4	3	3	0	44.4	2	2	0	44.4
C3.20	*	2	0	0	0	0.0	0	0	0	0.0	2	2	0	0.0
C5.11	*	2	0	0	0	0.0	0	0	0	0.0	0	0	0	0.0
C5.21	*	8	0	0	0	0.0	2	2	0	0.0	2	2	0	0.0
2-2523	**	12	0	0	0	0.0	2	2	0	0.0	4	4	0	0.0
C5.11	*	7	0	0	0	0.0	0	0	0	0.0	2	2	0	0.0
C5.21	*	8	0	0	0	0.0	0	0	0	0.0	2	2	0	0.0
2-2524	**	15	0	0	0	0.0	0	0	0	0.0	4	4	0	0.0
C5.11	*	59	3	0	3	25.0	5	5	0	25.0	4	4	0	25.0
2-2530	**	59	3	0	3	25.0	5	5	0	25.0	4	4	0	25.0
C5.11	*	5	0	0	0	0.0	0	0	0	0.0	2	2	0	0.0
C5.21	*	22	6	0	6	75.0	2	2	0	75.0	0	0	0	75.0
2-2531	**	27	6	0	6	60.0	2	2	0	60.0	2	2	0	60.0
C5.11	*	7	0	0	0	0.0	0	0	0	0.0	2	2	0	0.0
C5.21	*	17	2	0	2	25.0	4	4	0	25.0	2	2	0	25.0
2-2532	**	24	2	0	2	20.0	4	4	0	20.0	4	4	0	20.0
C5.21	*	10	0	0	0	0.0	3	3	0	0.0	0	0	0	0.0
C5.22	*	1	1	0	1	100.0	0	0	0	100.0	0	0	0	100.0

FORM 0007 (08/15/85) Westinghouse Proprietary

INT-ACCOUNTABILITY-IDENT.

Interval = "02" PERIOD = "02" PART 1 Time 16:01:03 Page 9

Effective Date 09/05/89 BY SKETCH Process Date 03/09/90

Sketch/Item or Class		ID's	Period 1 Tot	/	X	%	Period 2 Tot	/	X	%	Period 3 Tot	/	X	%
C1.10	*	12	12	0	12	66.7	3	3	0	66.7	3	3	0	66.7
C1.20	*	4	4	0	4	66.7	1	1	0	66.7	1	1	0	66.7
C1.30	*	4	4	0	4	66.7	1	1	0	66.7	1	1	0	66.7
C2.21	*	8	8	0	8	80.0	1	1	0	80.0	1	1	0	80.0
C2.22	*	8	8	0	8	80.0	1	1	0	80.0	1	1	0	80.0
2-1101	**	36	36	0	36	72.0	7	7	0	72.0	7	7	0	72.0
C1.20	*	6	1	0	1	50.0	0	0	0	50.0	1	1	0	50.0
C1.30	*	6	1	0	1	50.0	0	0	0	50.0	1	1	0	50.0
2-1110	**	12	2	0	2	50.0	0	0	0	50.0	2	2	0	50.0
C1.10	*	2	1	0	1	33.3	1	1	0	33.3	1	1	0	33.3
C1.20	*	2	1	0	1	33.3	1	1	0	33.3	1	1	0	33.3
C2.31	*	4	1	0	1	50.0	0	0	0	50.0	1	1	0	50.0
C2.33	*	4	1	1	0	0.0	0	0	0	0.0	1	1	0	0.0
C3.10	*	4	1	0	1	50.0	0	0	0	50.0	1	1	0	50.0
2-1120	**	16	5	1	4	33.3	2	2	0	33.3	5	5	0	33.3
C1.10	*	1	1	0	1	33.3	1	1	0	33.3	1	1	0	33.3
C1.20	*	1	1	0	1	33.3	1	1	0	33.3	1	1	0	33.3
2-1130	**	2	2	0	2	33.3	2	2	0	33.3	2	2	0	33.3
C1.10	*	1	1	0	1	33.3	1	1	0	33.3	1	1	0	33.3
C1.20	*	1	1	0	1	33.3	1	1	0	33.3	1	1	0	33.3
2-1140	**	2	2	0	2	33.3	2	2	0	33.3	2	2	0	33.3
C1.10	*	1	1	0	1	33.3	1	1	0	33.3	1	1	0	33.3
C1.20	*	1	1	0	1	33.3	1	1	0	33.3	1	1	0	33.3
2-1150	**	2	2	0	2	33.3	2	2	0	33.3	2	2	0	33.3
C1.20	*	2	2	0	2	33.3	2	2	0	33.3	2	2	0	33.3
2-1200	**	2	2	0	2	33.3	2	2	0	33.3	2	2	0	33.3
C1.10	*	4	1	0	1	33.3	1	1	0	33.3	1	1	0	33.3
C1.20	*	8	2	0	2	33.3	2	2	0	33.3	2	2	0	33.3
2-1210	**	12	3	0	3	33.3	3	3	0	33.3	3	3	0	33.3
C1.20	*	2	2	0	2	33.3	2	2	0	33.3	2	2	0	33.3
C2.31	*	2	1	0	1	50.0	0	0	0	50.0	1	1	0	50.0
C2.33	*	2	1	1	0	0.0	0	0	0	0.0	1	1	0	0.0

FORM D007 (08/15/8 Westinghouse Proprietary

INT-ACCOUNTABILITY-IDENT.

Interval = "02" PERIOD = "02" PART 1 Time 16:01:03 Page 10

Effective Date 09/05/89 BY SKETCH Process Date 03/09/90

Sketch/Item or Class		ID's	Period 1 Tot	Period 1 /	Period 1 X	Period 1 %	Period 2 Tot	Period 2 /	Period 2 X	Period 2 %	Period 3 Tot	Period 3 /	Period 3 X	Period 3 %
2-1220	**	6	4	1	3	30.0	2	2	0	30.0	4	4	0	30.0
C1.10	*	2	1	0	1	33.3	1	1	0	33.3	1	1	0	33.3
C1.20	*	2	1	0	1	33.3	1	1	0	33.3	1	1	0	33.3
2-1300	**	4	2	0	2	33.3	2	2	0	33.3	2	2	0	33.3
C1.10	*	1	1	0	1	33.3	1	1	0	33.3	1	1	0	33.3
C1.20	*	2	2	0	2	33.3	2	2	0	33.3	2	2	0	33.3
2-1310	**	3	3	0	3	33.3	3	3	0	33.3	3	3	0	33.3
C1.10	*	1	1	0	1	33.3	1	1	0	33.3	1	1	0	33.3
C1.20	*	2	2	0	2	33.3	2	2	0	33.3	2	2	0	33.3
2-1320	**	3	3	0	3	33.3	3	3	0	33.3	3	3	0	33.3
C3.20	*	7	0	0	0	0.0	7	7	0	0.0	0	0	0	0.0
C5.21	*	10	0	0	0	0.0	2	2	0	0.0	0	0	0	0.0
2-2100	**	17	0	0	0	0.0	9	9	0	0.0	0	0	0	0.0
C3.20	*	12	0	0	0	0.0	9	9	0	0.0	3	3	0	0.0
C5.11	*	7	1	0	1	100.0	0	0	0	100.0	0	0	0	100.0
C5.21	*	20	1	0	1	100.0	0	0	0	100.0	0	0	0	100.0
C5.31	*	7	2	0	2	100.0	0	0	0	100.0	0	0	0	100.0
2-2101	**	46	4	0	4	25.0	9	9	0	25.0	3	3	0	25.0
C3.20	*	11	2	0	2	18.2	7	7	0	18.2	2	2	0	18.2
C5.21	*	15	2	0	2	50.0	2	2	0	50.0	0	0	0	50.0
2-2102	**	26	4	0	4	26.7	9	9	0	26.7	2	2	0	26.7
C3.20	*	8	0	0	0	0.0	8	8	0	0.0	0	0	0	0.0
C5.21	*	14	0	0	0	0.0	0	0	0	0.0	2	2	0	0.0
2-2200	**	22	0	0	0	0.0	8	8	0	0.0	2	2	0	0.0
C3.20	*	3	0	0	0	0.0	3	3	0	0.0	0	0	0	0.0
C5.11	*	7	0	0	0	0.0	0	0	0	0.0	0	0	0	0.0
C5.21	*	18	0	0	0	0.0	0	0	0	0.0	0	0	0	0.0
C5.31	*	7	0	0	0	0.0	0	0	0	0.0	0	0	0	0.0
2-2201	**	35	0	0	0	0.0	3	3	0	0.0	0	0	0	0.0
C3.20	*	8	0	0	0	0.0	8	8	0	0.0	0	0	0	0.0
C5.21	*	17	1	0	1	100.0	0	0	0	100.0	0	0	0	100.0
2-2202	**	25	1	0	1	11.1	8	8	0	11.1	0	0	0	11.1

FORM D007 (08/15/85) Westinghouse Proprietary

INT-ACCOUNTABILITY-IDENT.

Interval = "02" PERIOD = "02" PART 1 Time 16:01:03 Page 7

Effective Date 10/25/89 BY SKETCH Process Date 03/09/90

Sketch/Item or Class		ID's	Period 1 Tot	/	X	%	Period 2 Tot	/	X	%	Period 3 Tot	/	X	%
B9.21	*	11	2	0	2	40.0	0	0	0	40.0	3	3	0	40.0
1-4505	**	20	8	0	8	61.5	1	1	0	61.5	4	4	0	61.5
B7.70	*	1	0	0	0	0.0	1	1	0	0.0	0	0	0	0.0
B9.21	*	21	0	0	0	0.0	5	5	0	0.0	0	0	0	0.0
B9.32	*	1	0	0	0	0.0	0	0	0	0.0	0	0	0	0.0
1-4506	**	23	0	0	0	0.0	6	6	0	0.0	0	0	0	0.0
B7.70	*	1	0	0	0	0.0	1	1	0	0.0	0	0	0	0.0
B9.21	*	29	3	0	3	30.0	3	3	0	30.0	4	4	0	30.0
B9.32	*	1	0	0	0	0.0	0	0	0	0.0	0	0	0	0.0
1-4507	**	31	3	0	3	27.3	4	4	0	27.3	4	4	0	27.3
B9.32	*	1	0	0	0	0.0	0	0	0	0.0	1	1	0	0.0
B9.40	*	28	0	0	0	0.0	0	0	0	0.0	2	2	0	0.0
1-4508	**	29	0	0	0	0.0	0	0	0	0.0	3	3	0	0.0
B7.70	*	2	0	0	0	0.0	0	0	0	0.0	2	2	0	0.0
B9.21	*	4	0	0	0	0.0	0	0	0	0.0	0	0	0	0.0
B9.32	*	1	0	0	0	0.0	0	0	0	0.0	0	0	0	0.0
1-4600	**	7	0	0	0	0.0	0	0	0	0.0	2	2	0	0.0
B7.70	*	2	0	0	0	0.0	0	0	0	0.0	2	2	0	0.0
B9.21	*	6	0	0	0	0.0	0	0	0	0.0	0	0	0	0.0
B9.32	*	1	0	0	0	0.0	0	0	0	0.0	0	0	0	0.0
1-4601	**	9	0	0	0	0.0	0	0	0	0.0	2	2	0	0.0
BRG1.14	*	4	1	0	1	25.0	1	1	0	25.0	2	2	0	25.0
B6.180	*	96	22	0	22	23.4	24	24	0	23.4	48	48	0	23.4
B6.190	*	4	0	0	0	0.0	0	0	0	0.0	0	0	0	0.0
B6.200	*	96	24	0	24	25.0	24	24	0	25.0	48	48	0	25.0
B7.60	*	72	18	0	18	25.0	18	18	0	25.0	36	36	0	25.0
B10.20	*	12	3	0	3	25.0	3	3	0	25.0	6	6	0	25.0
B12.10	*	12	0	0	0	0.0	0	0	0	0.0	3	3	0	0.0
B12.20	*	4	0	0	0	0.0	0	0	0	0.0	1	1	0	0.0
1-5100	**	300	68	0	68	24.1	70	70	0	24.1	144	144	0	24.1
B15.10	*	1	1	0	1	33.3	1	1	0	33.3	1	1	0	33.3
B15.20	*	1	1	0	1	33.3	1	1	0	33.3	1	1	0	33.3
B15.30	*	1	1	0	1	33.3	1	1	0	33.3	1	1	0	33.3
B15.50	*	1	1	0	1	33.3	1	1	0	33.3	1	1	0	33.3

FORM D007 (08/...) Westinghouse Proprietary

INT-ACCOUNTABILITY-IDENT.

Interval = "02" PERIOD = "02" PART 1 Time 16:01:03 Page 8

Effective Date 10/25/89 BY SKETCH Process Date 03/09/90

Sketch/Item or Class	ID's	Period 1 Tot	/	X	%	Period 2 Tot	/	X	%	Period 3 Tot	/	X	%
B15.60 *	1	1	0	1	33.3	1	1	0	33.3	1	1	0	33.3
B15.70 *	1	1	0	1	33.3	1	1	0	33.3	1	1	0	33.3
1-9100 **	6	6	0	6	33.3	6	6	0	33.3	6	6	0	33.3
B15.11 *	1	0	0	0	0.0	0	0	0	0.0	1	1	0	0.0
B15.21 *	1	0	0	0	0.0	0	0	0	0.0	1	1	0	0.0
B15.31 *	1	0	0	0	0.0	0	0	0	0.0	1	1	0	0.0
B15.51 *	1	0	0	0	0.0	0	0	0	0.0	1	1	0	0.0
B15.61 *	1	0	0	0	0.0	0	0	0	0.0	1	1	0	0.0
B15.71 *	1	0	0	0	0.0	0	0	0	0.0	1	1	0	0.0
1-9600 **	6	0	0	0	0.0	0	0	0	0.0	6	6	0	0.0
Class B ***	1874	813	0	813	45.3	419	419	0	45.3	562	562	0	45.3

FORM D007 (08/15/85) Westinghouse Proprietary

INT-ACCOUNTABILITY-IDENT.

Interval = "02" PERIOD = "02" PART 1 Time 16:01:03 Page 5

Effective Date 10/25/89 BY SKETCH Process Date 03/09/90

Sketch/Item or Class		ID's	Period 1 Tot	Period 1 /	Period 1 X	Period 1 %	Period 2 Tot	Period 2 /	Period 2 X	Period 2 %	Period 3 Tot	Period 3 /	Period 3 X	Period 3 %
1-4306	**	34	0	0	0	0.0	11	11	0	0.0	0	0	0	0.0
B7.50	*	1	0	0	0	0.0	0	0	0	0.0	1	1	0	0.0
B9.40	*	10	0	0	0	0.0	0	0	0	0.0	7	7	0	0.0
1-4307	**	11	0	0	0	0.0	0	0	0	0.0	8	8	0	0.0
B9.32	*	1	0	0	0	0.0	0	0	0	0.0	0	0	0	0.0
B9.40	*	6	0	0	0	0.0	0	0	0	0.0	0	0	0	0.0
1-4308	**	7	0	0	0	0.0	0	0	0	0.0	0	0	0	0.0
B5.10	*	2	1	0	1	50.0	0	0	0	50.0	1	1	0	50.0
B5.70	*	2	2	0	2	100.0	0	0	0	100.0	0	0	0	100.0
B9.11	*	12	1	0	1	33.3	1	1	0	33.3	1	1	0	33.3
B9.12	*	4	0	0	0	0.0	0	0	0	0.0	0	0	0	0.0
1-4400	**	20	4	0	4	57.1	1	1	0	57.1	2	2	0	57.1
B7.70	*	3	0	0	0	0.0	3	3	0	0.0	0	0	0	0.0
B9.11	*	12	0	0	0	0.0	3	3	0	0.0	0	0	0	0.0
B9.31	*	1	0	0	0	0.0	1	1	0	0.0	0	0	0	0.0
B9.32	*	1	0	0	0	0.0	0	0	0	0.0	0	0	0	0.0
B9.40	*	2	0	0	0	0.0	0	0	0	0.0	0	0	0	0.0
B10.10	*	1	0	0	0	0.0	1	1	0	0.0	0	0	0	0.0
B12.50	*	3	0	0	0	0.0	0	0	0	0.0	1	1	0	0.0
1-4401	**	23	0	0	0	0.0	8	8	0	0.0	1	1	0	0.0
B9.11	*	1	0	0	0	0.0	0	0	0	0.0	0	0	0	0.0
B9.31	*	1	0	0	0	0.0	0	0	0	0.0	0	0	0	0.0
1-4402	**	2	0	0	0	0.0	0	0	0	0.0	0	0	0	0.0
B9.21	*	1	1	0	1	100.0	0	0	0	100.0	0	0	0	100.0
B9.32	*	1	0	0	0	0.0	1	1	0	0.0	0	0	0	0.0
1-4403	**	2	1	0	1	50.0	1	1	0	50.0	0	0	0	50.0
B9.32	*	1	0	0	0	0.0	0	0	0	0.0	0	0	0	0.0
B9.40	*	1	1	0	1	100.0	0	0	0	100.0	0	0	0	100.0
1-4405	**	2	1	0	1	100.0	0	0	0	100.0	0	0	0	100.0
B9.32	*	1	0	0	0	0.0	0	0	0	0.0	0	0	0	0.0
B9.40	*	31	0	0	0	0.0	6	6	0	0.0	2	2	0	0.0
1-4406	**	32	0	0	0	0.0	6	6	0	0.0	2	2	0	0.0
B7.50	*	1	0	0	0	0.0	0	0	0	0.0	1	1	0	0.0

FORM D007 (08/...) Westinghouse Proprietary

INT-ACCOUNTABILITY-IDENT.

Interval = "02" PERIOD = "02" PART 1 Time 16:01:03 Page 6

Effective Date 10/25/89 BY SKETCH Process Date 03/09/90

Sketch/Item or Class		ID's	Period 1 Tot	Period 1 /	Period 1 X	Period 1 %	Period 2 Tot	Period 2 /	Period 2 X	Period 2 %	Period 3 Tot	Period 3 /	Period 3 X	Period 3 %
B9.40	*	12	0	0	0	0.0	0	0	0	0.0	4	4	0	0.0
1-4407	**	13	0	0	0	0.0	0	0	0	0.0	5	5	0	0.0
B9.32	*	1	0	0	0	0.0	0	0	0	0.0	0	0	0	0.0
B9.40	*	6	0	0	0	0.0	0	0	0	0.0	0	0	0	0.0
1-4408	**	7	0	0	0	0.0	0	0	0	0.0	0	0	0	0.0
B5.40	*	1	1	0	1	100.0	0	0	0	100.0	0	0	0	100.0
B9.11	*	5	1	0	1	50.0	1	1	0	50.0	0	0	0	50.0
B9.31	*	1	0	0	0	0.0	0	0	0	0.0	0	0	0	0.0
B10.10	*	2	0	0	0	0.0	2	2	0	0.0	0	0	0	0.0
1-4500	**	9	2	0	2	40.0	3	3	0	40.0	0	0	0	40.0
B5.40	*	1	0	0	0	0.0	1	1	0	0.0	0	0	0	0.0
B7.50	*	1	1	0	1	100.0	0	0	0	100.0	0	0	0	100.0
B7.70	*	1	0	0	0	0.0	0	0	0	0.0	1	1	0	0.0
B9.11	*	8	0	0	0	0.0	2	2	0	0.0	0	0	0	0.0
B12.50	*	1	1	0	1	100.0	0	0	0	100.0	0	0	0	100.0
1-4501	**	12	2	0	2	33.3	3	3	0	33.3	1	1	0	33.3
B5.40	*	1	1	0	1	100.0	0	0	0	100.0	0	0	0	100.0
B7.50	*	1	1	0	1	50.0	0	0	0	50.0	1	1	0	50.0
B7.70	*	1	0	0	0	0.0	0	0	0	0.0	1	1	0	0.0
B9.11	*	8	2	0	2	50.0	0	0	0	50.0	2	2	0	50.0
B12.50	*	1	0	0	0	0.0	0	0	0	0.0	0	0	0	0.0
1-4502	**	12	4	0	4	50.0	0	0	0	50.0	4	4	0	50.0
B5.40	*	1	0	0	0	0.0	1	1	0	0.0	0	0	0	0.0
B7.50	*	1	0	0	0	0.0	1	1	0	0.0	0	0	0	0.0
B7.70	*	1	0	0	0	0.0	0	0	0	0.0	1	1	0	0.0
B9.11	*	8	0	0	0	0.0	2	2	0	0.0	0	0	0	0.0
B12.50	*	1	1	0	1	100.0	0	0	0	100.0	0	0	0	100.0
1-4503	**	12	1	0	1	16.7	4	4	0	16.7	1	1	0	16.7
B5.40	*	1	0	0	0	0.0	0	0	0	0.0	1	1	0	0.0
B9.11	*	15	0	0	0	0.0	0	0	0	0.0	1	1	0	0.0
1-4504	**	16	0	0	0	0.0	0	0	0	0.0	2	2	0	0.0
B5.40	*	1	0	0	0	0.0	0	0	0	0.0	1	1	0	0.0
B7.70	*	4	3	0	3	75.0	1	1	0	75.0	0	0	0	75.0
B9.11	*	4	3	0	3	100.0	0	0	0	100.0	0	0	0	100.0

FORM 0007 (08/15/85) Westinghouse Proprietary

INT-ACCOUNTABILITY-IDENT.

Interval = "02" PERIOD = "02" PART 1 Time 16:01:03 Page 3

Effective Date 10/25/89 BY SKETCH Process Date 03/09/90

Sketch/Item or Class		ID's	Period 1 Tot	Period 1 /	Period 1 X	Period 1 %	Period 2 Tot	Period 2 /	Period 2 X	Period 2 %	Period 3 Tot	Period 3 /	Period 3 X	Period 3 %
1-4107	**	26	5	0	5	100.0	0	0	0	100.0	0	0	0	100.0
B7.50	*	1	1	0	1	100.0	0	0	0	100.0	0	0	0	100.0
B9.40	*	10	5	0	5	100.0	0	0	0	100.0	0	0	0	100.0
1-4108	**	11	6	0	6	100.0	0	0	0	100.0	0	0	0	100.0
B5.10	*	2	1	0	1	50.0	0	0	0	50.0	1	1	0	50.0
B5.70	*	2	2	0	2	50.0	1	1	0	50.0	1	1	0	50.0
B9.11	*	12	3	0	3	50.0	0	0	0	50.0	3	3	0	50.0
B9.12	*	4	0	0	0	0.0	0	0	0	0.0	2	2	0	0.0
1-4200	**	20	6	0	6	42.9	1	1	0	42.9	7	7	0	42.9
B7.70	*	2	1	0	1	50.0	1	1	0	50.0	0	0	0	50.0
B9.11	*	19	3	0	3	100.0	0	0	0	100.0	0	0	0	100.0
B9.31	*	1	0	0	0	0.0	0	0	0	0.0	0	0	0	0.0
B12.50	*	2	0	0	0	0.0	0	0	0	0.0	1	1	0	0.0
1-4201	**	24	4	0	4	66.7	1	1	0	66.7	1	1	0	66.7
B7.70	*	3	1	0	1	33.3	0	0	0	33.3	2	2	0	33.3
B9.11	*	12	2	0	2	28.6	0	0	0	28.6	5	5	0	28.6
B9.31	*	1	0	0	0	0.0	0	0	0	0.0	0	0	0	0.0
B9.32	*	1	0	0	0	0.0	0	0	0	0.0	0	0	0	0.0
B9.40	*	4	0	0	0	0.0	0	0	0	0.0	0	0	0	0.0
B10.10	*	1	1	0	1	100.0	0	0	0	100.0	0	0	0	100.0
B12.50	*	3	0	0	0	0.0	0	0	0	0.0	0	0	0	0.0
1-4202	**	25	4	0	4	36.4	0	0	0	36.4	7	7	0	36.4
B9.11	*	1	0	0	0	0.0	0	0	0	0.0	0	0	0	0.0
B9.31	*	1	0	0	0	0.0	0	0	0	0.0	0	0	0	0.0
1-4203	**	2	0	0	0	0.0	0	0	0	0.0	0	0	0	0.0
B9.21	*	1	1	0	1	100.0	0	0	0	100.0	0	0	0	100.0
B9.32	*	1	0	0	0	0.0	0	0	0	0.0	1	1	0	0.0
1-4204	**	2	1	0	1	50.0	0	0	0	50.0	1	1	0	50.0
B9.32	*	1	0	0	0	0.0	0	0	0	0.0	0	0	0	0.0
B9.40	*	1	1	0	1	100.0	0	0	0	100.0	0	0	0	100.0
1-4206	**	2	1	0	1	100.0	0	0	0	100.0	0	0	0	100.0
B9.32	*	1	0	0	0	0.0	0	0	0	0.0	0	0	0	0.0
B9.40	*	28	4	0	4	100.0	0	0	0	100.0	0	0	0	100.0

FORM D007 (08/1) Westinghouse Proprietary

INT-ACCOUNTABILITY-IDENT.

Interval = "02" PERIOD = "02" PART 1 Time 16:01:03 Page 4

Effective Date 10/25/89 BY SKETCH Process Date 03/09/90

Sketch/Item or Class		ID's	Period 1 Tot	Period 1 /	Period 1 X	Period 1 %	Period 2 Tot	Period 2 /	Period 2 X	Period 2 %	Period 3 Tot	Period 3 /	Period 3 X	Period 3 %
1-4207	**	29	4	0	4	100.0	0	0	0	100.0	0	0	0	100.0
B7.50	*	1	0	0	0	0.0	1	1	0	0.0	0	0	0	0.0
B9.40	*	13	0	0	0	0.0	0	0	0	0.0	0	0	0	0.0
1-4208	**	14	0	0	0	0.0	1	1	0	0.0	0	0	0	0.0
B9.32	*	1	0	0	0	0.0	0	0	0	0.0	1	1	0	0.0
B9.40	*	6	4	0	4	100.0	0	0	0	100.0	0	0	0	100.0
1-4209	**	7	4	0	4	80.0	0	0	0	80.0	1	1	0	80.0
B5.10	*	2	1	0	1	50.0	0	0	0	50.0	1	1	0	50.0
B5.70	*	2	2	0	2	50.0	0	0	0	50.0	2	2	0	50.0
B9.11	*	12	1	0	1	20.0	2	2	0	20.0	2	2	0	20.0
B9.12	*	4	0	0	0	0.0	0	0	0	0.0	0	0	0	0.0
1-4300	**	20	4	0	4	36.4	2	2	0	36.4	5	5	0	36.4
B7.70	*	3	0	0	0	0.0	3	3	0	0.0	0	0	0	0.0
B9.11	*	12	0	0	0	0.0	4	4	0	0.0	0	0	0	0.0
B9.31	*	1	0	0	0	0.0	0	0	0	0.0	0	0	0	0.0
B9.32	*	1	0	0	0	0.0	0	0	0	0.0	0	0	0	0.0
B9.40	*	2	0	0	0	0.0	0	0	0	0.0	0	0	0	0.0
B10.10	*	2	0	0	0	0.0	0	0	0	0.0	2	2	0	0.0
B12.50	*	3	2	0	2	100.0	0	0	0	100.0	0	0	0	100.0
1-4301	**	24	2	0	2	18.2	7	7	0	18.2	2	2	0	18.2
B9.11	*	1	0	0	0	0.0	0	0	0	0.0	0	0	0	0.0
B9.31	*	1	0	0	0	0.0	0	0	0	0.0	1	1	0	0.0
B9.32	*	1	0	0	0	0.0	0	0	0	0.0	0	0	0	0.0
B9.40	*	30	0	0	0	0.0	10	10	0	0.0	6	6	0	0.0
B10.10	*	1	0	0	0	0.0	0	0	0	0.0	1	1	0	0.0
1-4302	**	34	0	0	0	0.0	10	10	0	0.0	8	8	0	0.0
B9.21	*	1	1	0	1	100.0	0	0	0	100.0	0	0	0	100.0
B9.32	*	1	0	0	0	0.0	1	1	0	0.0	0	0	0	0.0
1-4303	**	2	1	0	1	50.0	1	1	0	50.0	0	0	0	50.0
B9.32	*	1	0	0	0	0.0	0	0	0	0.0	0	0	0	0.0
B9.40	*	1	1	0	1	100.0	0	0	0	100.0	0	0	0	100.0
1-4305	**	2	1	0	1	100.0	0	0	0	100.0	0	0	0	100.0
B9.32	*	1	0	0	0	0.0	0	0	0	0.0	0	0	0	0.0
B9.40	*	33	0	0	0	0.0	11	11	0	0.0	0	0	0	0.0

FORM 0007 (08/15/85) Westinghouse Proprietary

INT-ACCOUNTABILITY-IDENT.

Interval = "02" PERIOD = "02" PART 1 Time 16:01:03 Page 1

Effective Date 10/25/89 BY SKETCH Process Date 03/09/90

Sketch/Item or Class		ID's	Period 1 Tot	/	X	%	Period 2 Tot	/	X	%	Period 3 Tot	/	X	%
B1.11	*	2	0	0	0	0.0	0	0	0	0.0	1	1	0	0.0
B1.12	*	9	0	0	0	0.0	0	0	0	0.0	1	1	0	0.0
B1.21	*	2	0	0	0	0.0	0	0	0	0.0	1	1	0	0.0
B1.22	*	6	0	0	0	0.0	0	0	0	0.0	1	1	0	0.0
B1.30	*	1	1	0	1	50.0	0	0	0	50.0	1	1	0	50.0
B3.90	*	8	4	0	4	50.0	0	0	0	50.0	4	4	0	50.0
B3.100	*	8	4	0	4	50.0	0	0	0	50.0	4	4	0	50.0
B4.13	*	1	0	0	0	0.0	0	0	0	0.0	1	1	0	0.0
B6.40	*	54	27	0	27	50.0	0	0	0	50.0	27	27	0	50.0
1-1100	**	91	36	0	36	46.8	0	0	0	46.8	41	41	0	46.8
B13.10	*	1	1	0	1	33.3	1	1	0	33.3	1	1	0	33.3
B13.50	*	1	0	0	0	0.0	0	0	0	0.0	1	1	0	0.0
B13.60	*	1	0	0	0	0.0	0	0	0	0.0	1	1	0	0.0
B13.70	*	1	0	0	0	0.0	0	0	0	0.0	1	1	0	0.0
1-1200	**	4	1	0	1	16.7	1	1	0	16.7	4	4	0	16.7
B1.21	*	1	0	0	0	0.0	0	0	0	0.0	0	0	0	0.0
B1.22	*	6	0	0	0	0.0	0	0	0	0.0	0	0	0	0.0
B1.40	*	1	1	0	1	33.3	1	1	0	33.3	1	1	0	33.3
B4.12	*	1	0	0	0	0.0	0	0	0	0.0	1	1	0	0.0
B7.80	*	5	1	0	1	20.0	2	2	0	20.0	2	2	0	20.0
B14.10	*	33	0	0	0	0.0	0	0	0	0.0	4	4	0	0.0
1-1300	**	47	2	0	2	15.4	3	3	0	15.4	8	8	0	15.4
B6.10	*	54	18	0	18	33.3	18	18	0	33.3	18	18	0	33.3
B6.30	*	54	18	0	18	33.3	18	18	0	33.3	18	18	0	33.3
B6.50	*	54	18	0	18	33.3	18	18	0	33.3	18	18	0	33.3
1-1400	**	162	54	0	54	33.3	54	54	0	33.3	54	54	0	33.3
B2.11	*	2	2	0	2	33.3	2	2	0	33.3	2	2	0	33.3
B2.12	*	2	2	0	2	33.3	2	2	0	33.3	2	2	0	33.3
B3.120	*	6	6	0	6	33.3	6	6	0	33.3	6	6	0	33.3
B4.20	*	1	0	0	0	0.0	0	0	0	0.0	1	1	0	0.0
B7.20	*	16	5	0	5	31.3	5	5	0	31.3	6	6	0	31.3
B8.20	*	2	2	0	2	33.3	2	2	0	33.3	2	2	0	33.3
1-2100	**	29	17	0	17	32.1	17	17	0	32.1	19	19	0	32.1
B2.40	*	4	4	0	4	66.7	1	1	0	66.7	1	1	0	66.7
B3.140	*	8	8	0	8	61.5	2	2	0	61.5	3	3	0	61.5

FORM D007 108 Westinghouse Proprietary

INT-ACCOUNTABILITY-IDENT.

Interval = "02" PERIOD = "02" PART 1 Time 16:01:03 Page 2

Effective Date 10/25/89 BY SKETCH Process Date 03/09/90

Sketch/Item or Class		ID's	Period 1 Tot	/	X	%	Period 2 Tot	/	X	%	Period 3 Tot	/	X	%
B7.30	*	512	512	0	512	57.1	192	192	0	57.1	192	192	0	57.1
B16.20	*	1	0	0	0	0.0	0	0	0	0.0	0	0	0	0.0
1-3101	**	525	524	0	524	57.3	195	195	0	57.3	196	196	0	57.3
B5.10	*	2	1	0	1	50.0	0	0	0	50.0	1	1	0	50.0
B5.70	*	2	2	0	2	50.0	2	2	0	50.0	0	0	0	50.0
B9.11	*	12	2	0	2	66.7	0	0	0	66.7	1	1	0	66.7
B9.12	*	4	2	0	2	100.0	0	0	0	100.0	0	0	0	100.0
1-4100	**	20	7	0	7	63.6	2	2	0	63.6	2	2	0	63.6
B7.70	*	3	3	0	3	100.0	0	0	0	100.0	0	0	0	100.0
B9.11	*	15	3	0	3	100.0	0	0	0	100.0	0	0	0	100.0
B9.31	*	1	1	0	1	100.0	0	0	0	100.0	0	0	0	100.0
B9.32	*	1	0	0	0	0.0	0	0	0	0.0	0	0	0	0.0
B9.40	*	2	2	0	2	100.0	0	0	0	100.0	0	0	0	100.0
B12.50	*	3	0	0	0	0.0	0	0	0	0.0	0	0	0	0.0
1-4101	**	25	9	0	9	100.0	0	0	0	100.0	0	0	0	100.0
B9.11	*	1	0	0	0	0.0	0	0	0	0.0	0	0	0	0.0
B9.31	*	1	0	0	0	0.0	0	0	0	0.0	0	0	0	0.0
B9.32	*	1	0	0	0	0.0	0	0	0	0.0	0	0	0	0.0
B9.40	*	52	9	0	9	60.0	0	0	0	60.0	6	6	0	60.0
1-4102	**	55	9	0	9	60.0	0	0	0	60.0	6	6	0	60.0
B7.70	*	3	0	0	0	0.0	0	0	0	0.0	3	3	0	0.0
B9.21	*	10	2	0	2	100.0	0	0	0	100.0	0	0	0	100.0
B9.32	*	1	1	0	1	100.0	0	0	0	100.0	0	0	0	100.0
B9.40	*	9	5	0	5	100.0	0	0	0	100.0	0	0	0	100.0
1-4103	**	23	8	0	8	72.7	0	0	0	72.7	3	3	0	72.7
B9.21	*	1	1	0	1	100.0	0	0	0	100.0	0	0	0	100.0
B9.32	*	1	1	0	1	100.0	0	0	0	100.0	0	0	0	100.0
1-4104	**	2	2	0	2	100.0	0	0	0	100.0	0	0	0	100.0
B9.32	*	1	0	0	0	0.0	0	0	0	0.0	0	0	0	0.0
B9.40	*	1	1	0	1	100.0	0	0	0	100.0	0	0	0	100.0
1-4106	**	2	1	0	1	100.0	0	0	0	100.0	0	0	0	100.0
B9.32	*	1	0	0	0	0.0	0	0	0	0.0	0	0	0	0.0
B9.40	*	25	5	0	5	100.0	0	0	0	100.0	0	0	0	100.0

FORM D007 (08/15/85) Westinghouse Proprietary

NUCLEAR ENERGY SYSTEMS
FORM D038 08/25/87 Westinghouse Proprietary

NSID COMPONENT SURVEILLANCE SCHEDULE

Process Date 03/09/90

TAB D SUMMARY FOR : INT -Intv.02				'/' (SCHEDULED)				'X' (COMPLETED)				
DESCRIPTION OF TOTALS	ID'S QUAL.	ID'S SELECTED	EXAMS ADJUSTED	PERIOD 1	PERIOD 2	PERIOD 3	SUB TOTAL	PERIOD 1	PERIOD 2	PERIOD 3	SUB TOTAL	TOTAL ALL '/' & 'X'
1. Unique Idents	1874	1355	439	0	419	562	981	813	0	0	813	1794
2. Method VOL	481	314	24	0	72	136	208	130	0	0	130	338
3. Method SUR	808	324	8	0	101	109	210	122	0	0	122	332
4. Method VIS	850	832	415	0	286	353	639	608	0	0	608	1247
TOTALS (2, 3 & 4) IWB-Effective Date:10/25/89	2139	1470	447	0	459	598	1057	860	0	0	860	1917
1. Unique Idents	1026	371	68	6	146	141	293	146	0	0	146	439
2. Method VOL	450	147	49	0	58	53	111	85	0	0	85	196
3. Method SUR	917	301	12	0	114	101	215	98	0	0	98	313
4. Method VIS	18	16	9	6	4	11	21	4	0	0	4	25
TOTALS (2, 3 & 4) IWC-Effective Date:09/05/89	1385	464	70	6	176	165	347	187	0	0	187	534
1. Unique Idents	167	167	11	3	60	55	118	60	0	0	60	178
2. Method VOL	0	0	0	0	0	0	0	0	0	0	0	0
3. Method SUR	0	0	0	0	0	0	0	0	0	0	0	0
4. Method VIS	167	167	11	3	60	55	118	60	0	0	60	178
TOTALS (2, 3 & 4) IWD-Effective Date:09/05/89	167	167	11	3	60	55	118	60	0	0	60	178
1. Unique Idents	1289	1257	2	0	404	423	827	432	0	0	432	1259
2. Method VOL	0	0	0	0	0	0	0	0	0	0	0	0
3. Method SUR	0	0	0	0	0	0	0	0	0	0	0	0
4. Method VIS	1289	1257	2	0	404	423	827	432	0	0	432	1259
TOTALS (2, 3 & 4) IWF-Effective Date:06/21/89	1289	1257	2	0	404	423	827	432	0	0	432	1259

NUCLEAR ENERGY SYSTEMS
FORM D038 08/25/87 Westinghouse Proprietary

NSID COMPONENT SURVEILLANCE SCHEDULE

Process Date 03/09/90

TAB D SUMMARY FOR : INT -Intv.02				'/' (SCHEDULED)				'X' (COMPLETED)				
DESCRIPTION OF TOTALS	ID'S QUAL.	ID'S SELECTED	EXAMS ADJUSTED	PERIOD 1	PERIOD 2	PERIOD 3	SUB TOTAL	PERIOD 1	PERIOD 2	PERIOD 3	SUB TOTAL	TOTAL ALL '/' & 'X'
Grand Totals for INT												
1. Unique Idents	4356	3150	520	9	1029	1181	2219	1451	0	0	1451	3670
2. Method VOL	931	461	73	0	130	189	319	215	0	0	215	534
3. Method SUR	1725	625	20	0	215	210	425	220	0	0	220	645
4. Method VIS	2324	2272	437	9	754	842	1605	1104	0	0	1104	2709
TOTALS (2, 3 & 4)	4980	3358	530	9	1099	1241	2349	1539	0	0	1539	3888

NUCLEAR ENERGY SYSTEMS
FORM D037 08/25/87 Westinghouse Proprietary

NSID COMPONENT SURVEILLANCE SCHEDULE

Effective Date 06/21/89 Process Date 03/09/90

COMPONENT: PLATE AND SHELL TYPE SUPPORTS

83S	83S		INT		EXAMINATION METHODS			FIRST INTERVAL			SECOND INTERVAL			THIRD INTERVAL			FOURTH INTERVAL			
ITEM NUMBER	CATEGORY NUMBER	DESCRIPTION	SKETCH NUMBER	IDENT. NUMBER	VOL.	SUR.	VIS.	1ST PER	2ND PER	3RD PER	1ST PER	2ND PER	3RD PER	1ST PER	2ND PER	3RD PER	1ST PER	2ND PER	3RD PER	REMARKS
F1.30	F-A	INT-2-1210	F-1000	31-1WS			X						/							VT-3
F1.30	F-A	INT-2-1210	F-1000	32-1WS			X				X									
F1.30	F-A	INT-2-1210	F-1000	33-1WS			X					/								
F1.30	F-A	INT-2-1210	F-1000	34-1WS			X						/							
F1.30	F-A	INT-1-2100	F-1000	1-2100-18			X				X	/	/							
		TOTAL ID's for F1.30		5 *							2	2	3							

NSID COMPONENT SURVEILLANCE SCHEDULE

Effective Date 06/21/89 Process Date 03/09/90

COMPONENT: COMPONENT STANDARD SUPPORTS

83S	83S		INT		EXAMINATION METHODS			FIRST INTERVAL			SECOND INTERVAL			THIRD INTERVAL			FOURTH INTERVAL			
ITEM NUMBER	CATEGORY NUMBER	DESCRIPTION	SKETCH NUMBER	IDENT. NUMBER	VOL.	SUR.	VIS.	1ST PER	2ND PER	3RD PER	1ST PER	2ND PER	3RD PER	1ST PER	2ND PER	3RD PER	1ST PER	2ND PER	3RD PER	REMARKS
F3.10	F-C	INT-2-2102	F-1000	HBF-1			X				X									VT-3 & VT-4A. INCLUDES ITEM NUMBERS F3.10 THRU F3.50.
F3.10	F-C	INT-2-2202	F-1000	HBF-2			X					/								
F3.10	F-C	INT-2-2302	F-1000	HBF-3			X				X									
F3.10	F-C	INT-2-2402	F-1000	HBF-4			X						/							
F3.10	F-C	INT-2-2202	F-1000	HBF-9			X					/								
F3.10	F-C	INT-2-2100	F-1000	HMS-1			X					/								
F3.10	F-C	INT-2-2200	F-1000	HMS-2			X					/								
F3.10	F-C	INT-2-2300	F-1000	HMS-3			X						/							
F3.10	F-C	INT-2-2400	F-1000	HMS-4			X						/							
F3.10	F-C	INT-2-2100	F-1000	HMS-5			X					/								
F3.10	F-C	INT-2-2200	F-1000	HMS-6			X					/								
F3.10	F-C	INT-2-2400	F-1000	HMS-7			X				X									
F3.10	F-C	INT-2-2300	F-1000	HMS-8			X				X									
F3.10	F-C	INT-2-2300	F-1000	HMS-9			X				X									
F3.10	F-C	INT-2-2301	F-1000	MSR-1			X						/							
F3.10	F-C	INT-2-2301	F-1000	MSR-2			X						/							
F3.10	F-C	INT-2-2101	F-1000	MSR-4			X				X									
F3.10	F-C	INT-2-2401	F-1000	MSR-5			X						/							
F3.10	F-C	INT-2-2401	F-1000	MSR-6			X					/								
F3.10	F-C	INT-2-2201	F-1000	MSR-7			X					/								
F3.10	F-C	INT-2-2201	F-1000	MSR-8			X					/								
F3.10	F-C	INT-2-2301	F-1000	MSR-9			X					/								
F3.10	F-C	INT-1-4302	F-1000	PWR-1			X					/								
F3.10	F-C	INT-1-4207	F-1000	PWR-2			X				X									
F3.10	F-C	INT-1-4406	F-1000	PWR-3			X						/							
F3.10	F-C	INT-1-4301	F-1000	PWR-4			X					/								
F3.10	F-C	INT-1-4202	F-1000	PWR-5			X				X									
F3.10	F-C	INT-1-4401	F-1000	PWR-6			X					/								
F3.10	F-C	INT-1-4201	F-1000	PWR-7			X				X									
F3.10	F-C	INT-3-1230	F-1000	3-1230			X						/							
F3.10	F-C	INT-2-2102	F-1000	HBF-10			X				X									
F3.10	F-C	INT-2-2302	F-1000	HBF-11			X				X									
F3.10	F-C	INT-2-2402	F-1000	HBF-12			X				X									
F3.10	F-C	INT-2-2402	F-1000	HBF-13			X				X									
F3.10	F-C	INT-2-2302	F-1000	HBF-14			X				X									
F3.10	F-C	INT-2-2302	F-1000	HBF-15			X				X									
F3.10	F-C	INT-2-2302	F-1000	HBF-16			X				X									
F3.10	F-C	INT-2-2102	F-1000	HBF-17			X				X									
F3.10	F-C	INT-2-2102	F-1000	HBF-18			X				X									
F3.10	F-C	INT-2-2102	F-1000	HBF-19			X				X									
F3.10	F-C	INT-2-2300	F-1000	HMS-10			X				X									

NSID COMPONENT SURVEILLANCE SCHEDULE

Effective Date 06/21/89 Process Date 03/09/90

COMPONENT: COMPONENT STANDARD SUPPORTS

83S	83S		INT		EXAMINATION METHODS			FIRST INTERVAL			SECOND INTERVAL			THIRD INTERVAL			FOURTH INTERVAL			
ITEM NUMBER	CATEGORY NUMBER	DESCRIPTION	SKETCH NUMBER	IDENT. NUMBER	VOL.	SUR.	VIS.	1ST PER	2ND PER	3RD PER	1ST PER	2ND PER	3RD PER	1ST PER	2ND PER	3RD PER	1ST PER	2ND PER	3RD PER	REMARKS
F3.10	F-C	INT-2-2300	F-1000	HMS-11			X				X									
F3.10	F-C	INT-2-2300	F-1000	HMS-12			X						/							
F3.10	F-C	INT-2-2100	F-1000	HMS-13			X					/								
F3.10	F-C	INT-2-2100	F-1000	HMS-14			X					/								
F3.10	F-C	INT-2-2100	F-1000	HMS-15			X					/								
F3.10	F-C	INT-2-2200	F-1000	HMS-16			X					/								
F3.10	F-C	INT-2-2200	F-1000	HMS-17			X					/								
F3.10	F-C	INT-2-2300	F-1000	HMS-18			X					/								
F3.10	F-C	INT-2-2400	F-1000	HMS-19			X						/							
F3.10	F-C	INT-2-2542	F-1000	MS-214			X						/							MS-214-SI-H&R-361
F3.10	F-C	INT-3-3403	F-1000	MS-547			X					/								M/S-547-SWN-R-408
F3.10	F-C	INT-3-3405	F-1000	MS-563			X					/								M/S-563-SWN-R-411
F3.10	F-C	INT-2-2541	F-1000	MS60-5			X						/							MS-60-5-SI-H-356
F3.10	F-C	INT-2-2541	F-1000	MS60-6			X						/							MS-60-6-SI-A-356
F3.10	F-C	INT-2-2401	F-1000	MSR-10			X						/							
F3.10	F-C	INT-2-2101	F-1000	MSR-11			X				X									
F3.10	F-C	INT-2-2201	F-1000	MSR-12			X					/								
F3.10	F-C	INT-2-2101	F-1000	MSR-13			X				X									
F3.10	F-C	INT-2-2301	F-1000	MSR-15			X						/							
F3.10	F-C	INT-2-2101	F-1000	MSR-16			X				X									
F3.10	F-C	INT-2-2101	F-1000	MSR-17			X				X									
F3.10	F-C	INT-2-2201	F-1000	MSR-18			X					/								
F3.10	F-C	INT-2-2401	F-1000	MSR-19			X						/							
F3.10	F-C	INT-2-2301	F-1000	MSR-20			X						/							
F3.10	F-C	INT-2-2101	F-1000	MSR-21			X				X									
F3.10	F-C	INT-2-2201	F-1000	MSR-22			X					/								
F3.10	F-C	INT-2-2301	F-1000	MSR-23			X						/							
F3.10	F-C	INT-2-2101	F-1000	MSR-24			X				X									
F3.10	F-C	INT-2-2401	F-1000	MSR-25			X						/							
F3.10	F-C	INT-2-2301	F-1000	MSR-26			X						/							
F3.10	F-C	INT-2-2101	F-1000	MSR-27			X				X									
F3.10	F-C	INT-2-2201	F-1000	MSR-28			X					/								
F3.10	F-C	INT-2-2101	F-1000	MSR-29			X				X									
F3.10	F-C	INT-2-2201	F-1000	MSR-30			X					/								
F3.10	F-C	INT-1-4401	F-1000	PWR-4A			X					/								
F3.10	F-C	INT-1-4202	F-1000	PWR-4B			X				X									
F3.10	F-C	INT-1-4201	F-1000	PWR-7A			X				X									
F3.10	F-C	INT-1-4201	F-1000	PWR-7C			X				X									
F3.10	F-C	INT-1-4201	F-1000	PWR-7D			X				X									
F3.10	F-C	INT-1-4201	F-1000	PWR-7E			X				X									
F3.10	F-C	INT-1-4601	F-1000	PWR-85			X						/							
F3.10	F-C	INT-1-4507	F-1000	PWR-90			X				X									
F3.10	F-C	INT-1-4507	F-1000	PWR-91			X				X									

NSID COMPONENT SURVEILLANCE SCHEDULE

Effective Date 06/21/89 Process Date 03/09/90

COMPONENT: COMPONENT STANDARD SUPPORTS

83S	83S		INT		EXAMINATION METHODS			FIRST INTERVAL			SECOND INTERVAL			THIRD INTERVAL			FOURTH INTERVAL			
ITEM NUMBER	CATEGORY NUMBER	DESCRIPTION	SKETCH NUMBER	IDENT. NUMBER	VOL.	SUR.	VIS.	1ST PER	2ND PER	3RD PER	1ST PER	2ND PER	3RD PER	1ST PER	2ND PER	3RD PER	1ST PER	2ND PER	3RD PER	REMARKS
F3.10	F-C	INT-1-4507	F-1000	PWR-92			X				X									
F3.10	F-C	INT-1-4507	F-1000	PWR-96			X				X									
F3.10	F-C	INT-1-4507	F-1000	PWR-97			X				X									
F3.10	F-C	INT-1-4507	F-1000	PWR-98			X				X									
F3.10	F-C	INT-2-2542	F-1000	PWR134			X						/							
F3.10	F-C	INT-2-2542	F-1000	PWR140			X						/							
F3.10	F-C	INT-2-2542	F-1000	PWR141			X						/							
F3.10	F-C	INT-3-3411	F-1000	SW-H-1			X					/								
F3.10	F-C	INT-3-3411	F-1000	SW-H-3			X					/								
F3.10	F-C	INT-2-2510	F-1000	AC-H-83			X				X									
F3.10	F-C	INT-2-2510	F-1000	AC-H-84			X				X									
F3.10	F-C	INT-2-2510	F-1000	AC-H-86			X				X									
F3.10	F-C	INT-3-3504	F-1000	AC-H-89			X				X									
F3.10	F-C	INT-3-3508	F-1000	AC-H-93			X						/							
F3.10	F-C	INT-3-3508	F-1000	AC-H-95			X						/							
F3.10	F-C	INT-1-4201	F-1000	AC-R-40			X				X									
F3.10	F-C	INT-1-4201	F-1000	AC-R-41			X				X									
F3.10	F-C	INT-3-3506	F-1000	AC-R167			X						/							
F3.10	F-C	INT-3-3503	F-1000	AC-R168			X					/								
F3.10	F-C	INT-2-2540	F-1000	MS-60-4			X				X									MS-60-4-SI-A-56
F3.10	F-C	INT-2-2540	F-1000	MS-60-5			X					/								MS-60-5-SI-H-56
F3.10	F-C	INT-2-2540	F-1000	MS-60-6			X				X									MS-60-6-SI-H-56
F3.10	F-C	INT-3-3407	F-1000	MS407-2			X					/								M/S-407-2-SWN-H&R-405
F3.10	F-C	INT-3-3407	F-1000	MS407-3			X					/								M/S-407-3-SWN-H&R-405
F3.10	F-C	INT-3-3507	F-1000	MS53-10			X						/							M/S-53-10-AC-H&R-53A
F3.10	F-C	INT-2-2543	F-1000	MS60-15			X						/							MS-60-15-SI-H&R-550
F3.10	F-C	INT-2-2543	F-1000	MS60-16			X						/							MS-60-16-SI-H&R-550
F3.10	F-C	INT-1-4504	F-1000	PWR-103			X						/							
F3.10	F-C	INT-1-4500	F-1000	PWR-120			X				X									
F3.10	F-C	INT-1-4500	F-1000	PWR-121			X				X									
F3.10	F-C	INT-1-4500	F-1000	PWR-122			X				X									
F3.10	F-C	INT-1-4500	F-1000	PWR-123			X				X									
F3.10	F-C	INT-1-4500	F-1000	PWR-124			X				X									
F3.10	F-C	INT-1-4500	F-1000	PWR-125			X				X									
F3.10	F-C	INT-1-4101	F-1000	PWR-127			X				X									
F3.10	F-C	INT-1-4101	F-1000	PWR-128			X				X									
F3.10	F-C	INT-1-4101	F-1000	PWR-129			X				X									
F3.10	F-C	INT-2-2521	F-1000	PWR-130			X					/								
F3.10	F-C	INT-2-2521	F-1000	PWR-131			X					/								
F3.10	F-C	INT-2-2521	F-1000	PWR-132			X					/								
F3.10	F-C	INT-2-2521	F-1000	PWR-133			X					/								
F3.10	F-C	INT-1-4301	F-1000	PWR-134			X					/								
F3.10	F-C	INT-2-2521	F-1000	PWR-135			X					/								

NSID COMPONENT SURVEILLANCE SCHEDULE

Effective Date 06/21/89 Process Date 03/09/90

COMPONENT: COMPONENT STANDARD SUPPORTS

83S	83S		INT		EXAMINATION METHODS			FIRST INTERVAL			SECOND INTERVAL			THIRD INTERVAL			FOURTH INTERVAL			
ITEM NUMBER	CATEGORY NUMBER	DESCRIPTION	SKETCH NUMBER	IDENT. NUMBER	VOL.	SUR.	VIS.	1ST PER	2ND PER	3RD PER	1ST PER	2ND PER	3RD PER	1ST PER	2ND PER	3RD PER	1ST PER	2ND PER	3RD PER	REMARKS
F3.10	F-C	INT-2-2521	F-1000	PWR-136			X					/								
F3.10	F-C	INT-2-2521	F-1000	PWR-137			X					/								
F3.10	F-C	INT-2-2521	F-1000	PWR-138			X					/								
F3.10	F-C	INT-2-2521	F-1000	PWR-139			X					/								
F3.10	F-C	INT-2-2521	F-1000	PWR-140			X					/								
F3.10	F-C	INT-2-2521	F-1000	PWR-141			X					/								
F3.10	F-C	INT-2-2521	F-1000	PWR-142			X					/								
F3.10	F-C	INT-2-2521	F-1000	PWR-143			X					/								
F3.10	F-C	INT-2-2521	F-1000	PWR-144			X					/								
F3.10	F-C	INT-2-2521	F-1000	PWR-145			X					/								
F3.10	F-C	INT-2-2523	F-1000	PWR-147			X					/								
F3.10	F-C	INT-2-2523	F-1000	PWR-148			X					/								
F3.10	F-C	INT-2-2523	F-1000	PWR-149			X					/								
F3.10	F-C	INT-2-2523	F-1000	PWR-150			X					/								
F3.10	F-C	INT-1-4202	F-1000	PWR-151			X						/							
F3.10	F-C	INT-1-4202	F-1000	PWR-152			X						/							
F3.10	F-C	INT-2-2522	F-1000	PWR-153			X				X									
F3.10	F-C	INT-2-2522	F-1000	PWR-154			X				X									
F3.10	F-C	INT-2-2522	F-1000	PWR-155			X				X									
F3.10	F-C	INT-2-2524	F-1000	PWR-156			X				X									
F3.10	F-C	INT-2-2524	F-1000	PWR-157			X				X									
F3.10	F-C	INT-2-2524	F-1000	PWR-158			X				X									
F3.10	F-C	INT-2-2524	F-1000	PWR-159			X				X									
F3.10	F-C	INT-2-2524	F-1000	PWR-160			X				X									
F3.10	F-C	INT-2-2524	F-1000	PWR-161			X				X									
F3.10	F-C	INT-2-2524	F-1000	PWR-162			X				X									
F3.10	F-C	INT-2-2200	F-1000	PWR-234			X					/								
F3.10	F-C	INT-2-2200	F-1000	PWR-235			X					/								
F3.10	F-C	INT-2-2100	F-1000	PWR-236			X					/								
F3.10	F-C	INT-2-2100	F-1000	PWR-237			X					/								
F3.10	F-C	INT-2-2200	F-1000	PWR-238			X					/								
F3.10	F-C	INT-2-2200	F-1000	PWR-239			X						/							
F3.10	F-C	INT-2-2300	F-1000	PWR-240			X					/								
F3.10	F-C	INT-2-2300	F-1000	PWR-241			X					/								
F3.10	F-C	INT-2-2400	F-1000	PWR-242			X						/							
F3.10	F-C	INT-2-2400	F-1000	PWR-243			X						/							
F3.10	F-C	INT-2-2300	F-1000	PWR-244			X					/								
F3.10	F-C	INT-2-2300	F-1000	PWR-245			X					/								
F3.10	F-C	INT-2-2302	F-1000	PWR-246			X						/							
F3.10	F-C	INT-2-2202	F-1000	PWR-247			X					/								
F3.10	F-C	INT-2-2402	F-1000	PWR-248			X						/							
F3.10	F-C	INT-2-2102	F-1000	PWR-249			X				X									
F3.10	F-C	INT-2-2102	F-1000	PWR-250			X				X									

NSID COMPONENT SURVEILLANCE SCHEDULE

Effective Date 06/21/89 Process Date 03/09/90

COMPONENT: COMPONENT STANDARD SUPPORTS

83S	83S		INT		EXAMINATION METHODS			FIRST INTERVAL			SECOND INTERVAL			THIRD INTERVAL			FOURTH INTERVAL			
ITEM NUMBER	CATEGORY NUMBER	DESCRIPTION	SKETCH NUMBER	IDENT. NUMBER	VOL.	SUR.	VIS.	1ST PER	2ND PER	3RD PER	1ST PER	2ND PER	3RD PER	1ST PER	2ND PER	3RD PER	1ST PER	2ND PER	3RD PER	REMARKS
F3.10	F-C	INT-2-2102	F-1000	PWR-251			X				X									
F3.10	F-C	INT-2-2202	F-1000	PWR-252			X					/								
F3.10	F-C	INT-2-2202	F-1000	PWR-253			X					/								
F3.10	F-C	INT-2-2202	F-1000	PWR-254			X					/								
F3.10	F-C	INT-2-2202	F-1000	PWR-255			X					/								
F3.10	F-C	INT-2-2100	F-1000	PWR-256			X					/								
F3.10	F-C	INT-2-2100	F-1000	PWR-257			X					/								
F3.10	F-C	INT-2-2200	F-1000	PWR-258			X					/								
F3.10	F-C	INT-2-2200	F-1000	PWR-259			X					/								
F3.10	F-C	INT-2-2200	F-1000	PWR-260			X					/								
F3.10	F-C	INT-2-2302	F-1000	PWR-261			X						/							
F3.10	F-C	INT-2-2302	F-1000	PWR-262			X						/							
F3.10	F-C	INT-2-2302	F-1000	PWR-263			X						/							
F3.10	F-C	INT-2-2402	F-1000	PWR-264			X						/							
F3.10	F-C	INT-2-2402	F-1000	PWR-265			X						/							
F3.10	F-C	INT-2-2402	F-1000	PWR-266			X						/							
F3.10	F-C	INT-2-2402	F-1000	PWR-267			X						/							
F3.10	F-C	INT-2-2300	F-1000	PWR-268			X						/							
F3.10	F-C	INT-2-2300	F-1000	PWR-269			X						/							
F3.10	F-C	INT-2-2300	F-1000	PWR-270			X						/							
F3.10	F-C	INT-2-2400	F-1000	PWR-271			X						/							
F3.10	F-C	INT-2-2400	F-1000	PWR-272			X						/							
F3.10	F-C	INT-2-2400	F-1000	PWR-273			X						/							
F3.10	F-C	INT-2-2100	F-1000	PWR-274			X					/								
F3.10	F-C	INT-2-2200	F-1000	PWR-275			X					/								
F3.10	F-C	INT-2-2300	F-1000	PWR-276			X					/								
F3.10	F-C	INT-2-2400	F-1000	PWR-277			X						/							
F3.10	F-C	INT-2-2102	F-1000	PWR-530			X				X									
F3.10	F-C	INT-2-2202	F-1000	PWR-531			X					/								
F3.10	F-C	INT-2-2402	F-1000	PWR-532			X						/							
F3.10	F-C	INT-2-2302	F-1000	PWR-533			X						/							
F3.10	F-C	INT-2-2102	F-1000	PWR-534			X				X									
F3.10	F-C	INT-2-2302	F-1000	PWR-535			X						/							
F3.10	F-C	INT-2-2102	F-1000	PWR-536			X				X									
F3.10	F-C	INT-2-2202	F-1000	PWR-537			X					/								
F3.10	F-C	INT-2-2402	F-1000	PWR-538			X						/							
F3.10	F-C	INT-2-2302	F-1000	PWR-539			X						/							
F3.10	F-C	INT-1-4506	F-1000	PWR-98A			X					/								
F3.10	F-C	INT-1-4506	F-1000	RC-R-25			X					/								
F3.10	F-C	INT-2-2532	F-1000	SI-R-44			X				X									
F3.10	F-C	INT-3-3412	F-1000	SW-H-13			X					/								
F3.10	F-C	INT-3-3414	F-1000	SW-H-19			X						/							
F3.10	F-C	INT-3-3414	F-1000	SW-H-20			X						/							

NSID COMPONENT SURVEILLANCE SCHEDULE

Effective Date 06/21/89 Process Date 03/09/90

COMPONENT: COMPONENT STANDARD SUPPORTS

83S	83S		INT		EXAMINATION METHODS			FIRST INTERVAL			SECOND INTERVAL			THIRD INTERVAL			FOURTH INTERVAL			
ITEM NUMBER	CATEGORY NUMBER	DESCRIPTION	SKETCH NUMBER	IDENT. NUMBER	VOL.	SUR.	VIS.	1ST PER	2ND PER	3RD PER	1ST PER	2ND PER	3RD PER	1ST PER	2ND PER	3RD PER	1ST PER	2ND PER	3RD PER	REMARKS
F3.10	F-C	INT-3-3414	F-1000	SW-H-29			X						/							
F3.10	F-C	INT-3-3413	F-1000	SW-H-35			X					/								
F3.10	F-C	INT-3-3413	F-1000	SW-H-40			X					/								
F3.10	F-C	INT-3-3411	F-1000	SW-H-43			X				X									
F3.10	F-C	INT-3-3411	F-1000	SW-H-44			X				X									
F3.10	F-C	INT-3-3410	F-1000	SW-H-55			X				X									
F3.10	F-C	INT-3-3410	F-1000	SW-H-62			X				X									
F3.10	F-C	INT-3-3410	F-1000	SW-H-63			X				X									
F3.10	F-C	INT-3-3410	F-1000	SW-H-71			X				X									
F3.10	F-C	INT-3-3410	F-1000	SW-H-73			X				X									
F3.10	F-C	INT-3-3409	F-1000	SW-H-79			X				X									
F3.10	F-C	INT-3-3409	F-1000	SW-H-84			X				X									
F3.10	F-C	INT-3-3409	F-1000	SW-H-88			X				X									
F3.10	F-C	INT-3-3412	F-1000	SW-H-89			X				X									
F3.10	F-C	INT-3-3409	F-1000	SW-H-90			X				X									
F3.10	F-C	INT-2-2510	F-1000	AC-A-9-7			X				X									
F3.10	F-C	INT-2-2500	F-1000	AC-H-201			X				X									
F3.10	F-C	INT-2-2500	F-1000	AC-H-207			X						/							
F3.10	F-C	INT-2-2512	F-1000	AC-H-210			X				X									
F3.10	F-C	INT-2-2512	F-1000	AC-H-211			X				X									
F3.10	F-C	INT-2-2512	F-1000	AC-H-212			X				X									
F3.10	F-C	INT-2-2512	F-1000	AC-H-214			X					/								
F3.10	F-C	INT-2-2512	F-1000	AC-H-215			X					/								
F3.10	F-C	INT-2-2511	F-1000	AC-H-219			X				X									
F3.10	F-C	INT-2-2511	F-1000	AC-H-220			X				X									
F3.10	F-C	INT-2-2511	F-1000	AC-H-222			X				X									
F3.10	F-C	INT-2-2511	F-1000	AC-H-227			X				X									
F3.10	F-C	INT-3-3501	F-1000	AC-H-475			X				X									
F3.10	F-C	INT-3-3503	F-1000	AC-H-478			X					/								
F3.10	F-C	INT-3-3503	F-1000	AC-H-479			X					/								
F3.10	F-C	INT-3-3503	F-1000	AC-H-480			X					/								
F3.10	F-C	INT-3-3500	F-1000	AC-H-535			X				X									
F3.10	F-C	INT-3-3500	F-1000	AC-H-536			X				X									
F3.10	F-C	INT-3-3501	F-1000	AC-H-537			X				X									
F3.10	F-C	INT-3-3501	F-1000	AC-H-539			X				X									
F3.10	F-C	INT-3-3501	F-1000	AC-H-542			X				X									
F3.10	F-C	INT-3-3501	F-1000	AC-H-544			X				X									
F3.10	F-C	INT-3-3501	F-1000	AC-H-546			X				X									
F3.10	F-C	INT-3-3503	F-1000	AC-H-561			X					/								
F3.10	F-C	INT-3-3503	F-1000	AC-H-563			X					/								
F3.10	F-C	INT-2-2512	F-1000	AC-H-9-1			X					/								
F3.10	F-C	INT-2-2511	F-1000	AC-H-9-3			X				X									
F3.10	F-C	INT-2-2511	F-1000	AC-H-9-4			X				X									

NSID COMPONENT SURVEILLANCE SCHEDULE

Effective Date 06/21/89 Process Date 03/09/90

COMPONENT: COMPONENT STANDARD SUPPORTS

83S	83S		INT		EXAMINATION METHODS			FIRST INTERVAL			SECOND INTERVAL			THIRD INTERVAL			FOURTH INTERVAL			
ITEM NUMBER	CATEGORY NUMBER	DESCRIPTION	SKETCH NUMBER	IDENT. NUMBER	VOL.	SUR.	VIS.	1ST PER	2ND PER	3RD PER	1ST PER	2ND PER	3RD PER	1ST PER	2ND PER	3RD PER	1ST PER	2ND PER	3RD PER	REMARKS
F3.10	F-C	INT-2-2510	F-1000	AC-H-9-6			X				X									
F3.10	F-C	INT-2-2510	F-1000	AC-H-9-8			X				X									
F3.10	F-C	INT-2-2510	F-1000	AC-H-9-9			X				X									
F3.10	F-C	INT-3-3505	F-1000	AC-R-167			X						/							
F3.10	F-C	INT-3-3501	F-1000	AC-R-168			X				X									INACCESSIBLE.VT-2 REFERENCE TABLE 4.0
F3.10	F-C	INT-2-2512	F-1000	AC-R-212			X				X									
F3.10	F-C	INT-2-2512	F-1000	AC-R-213			X				X									
F3.10	F-C	INT-2-2512	F-1000	AC-R-214			X				X									
F3.10	F-C	INT-2-2512	F-1000	AC-R-215			X					/								
F3.10	F-C	INT-2-2512	F-1000	AC-R-216			X					/								
F3.10	F-C	INT-2-2512	F-1000	AC-R-221			X					/								
F3.10	F-C	INT-2-2511	F-1000	AC-R-222			X				X									
F3.10	F-C	INT-3-3503	F-1000	AC-R-481			X					/								
F3.10	F-C	INT-3-3500	F-1000	AC-R-520			X				X									
F3.10	F-C	INT-3-3500	F-1000	AC-R-522			X				X									
F3.10	F-C	INT-3-3500	F-1000	AC-R-525			X				X									
F3.10	F-C	INT-3-3500	F-1000	AC-R-527			X				X									
F3.10	F-C	INT-3-3500	F-1000	AC-R-531			X				X									
F3.10	F-C	INT-3-3500	F-1000	AC-R-533			X				X									
F3.10	F-C	INT-3-3500	F-1000	AC-R-534			X				X									
F3.10	F-C	INT-3-3501	F-1000	AC-R-543			X				X									
F3.10	F-C	INT-3-3501	F-1000	AC-R-545			X				X									
F3.10	F-C	INT-2-2512	F-1000	AC-R-9-2			X					/								
F3.10	F-C	INT-2-2102	F-1000	BF-R-300			X				X									
F3.10	F-C	INT-2-2302	F-1000	BFD-H-43			X						/							
F3.10	F-C	INT-2-2102	F-1000	BFD-H-46			X				X									
F3.10	F-C	INT-3-3509	F-1000	M/S-13-1			X				X									M/S-13-1-AC-H-14
F3.10	F-C	INT-3-3509	F-1000	M/S-13-2			X				X									M/S-13-2-AC-H-14
F3.10	F-C	INT-3-3505	F-1000	M/S-53-5			X						/							M/S-53-5-AC-H&R-53A
F3.10	F-C	INT-3-3502	F-1000	M/S-53-6			X					/								M/S-53-6-AC-H&R-52
F3.10	F-C	INT-3-3502	F-1000	M/S-53-7			X					/								M/S-53-7-AC-H-52
F3.10	F-C	INT-3-3502	F-1000	M/S-53-8			X					/								M/S-53-8-AC-H&R-52
F3.10	F-C	INT-2-2500	F-1000	MS-10-15			X					/								MS-10-15-AC-H-57
F3.10	F-C	INT-3-3410	F-1000	MS-12A-6			X				X									M/S-12A-6-SW-R-12C
F3.10	F-C	INT-3-3405	F-1000	MS-407-1			X					/								M/S-407-1-SWN-H&R-411
F3.10	F-C	INT-3-3405	F-1000	MS-407-2			X					/								M/S-407-2-SWN-H&R-411
F3.10	F-C	INT-3-3405	F-1000	MS-407-3			X					/								M/S-407-3-SWN-H&R-411
F3.10	F-C	INT-3-3405	F-1000	MS-407-4			X					/								M/S-407-4-SWN-H&R-411
F3.10	F-C	INT-3-3508	F-1000	MS-52A-3			X						/							MS-52A-3-AC-H&R-53A
F3.10	F-C	INT-3-3508	F-1000	MS-52A-4			X						/							MS-52A-4-AC-H-53A
F3.10	F-C	INT-3-3508	F-1000	MS-52A-5			X						/							MS-52A-5-AC-H-53A
F3.10	F-C	INT-3-3508	F-1000	MS-52A-6			X						/							MS-52A-6-AC-H&R-53A

NSID COMPONENT SURVEILLANCE SCHEDULE

Effective Date 06/21/89 Process Date 03/09/90

COMPONENT: COMPONENT STANDARD SUPPORTS

83S	83S		INT		EXAMINATION METHODS			FIRST INTERVAL			SECOND INTERVAL			THIRD INTERVAL			FOURTH INTERVAL			
ITEM NUMBER	CATEGORY NUMBER	DESCRIPTION	SKETCH NUMBER	IDENT. NUMBER	VOL.	SUR.	VIS.	1ST PER	2ND PER	3RD PER	1ST PER	2ND PER	3RD PER	1ST PER	2ND PER	3RD PER	1ST PER	2ND PER	3RD PER	REMARKS
F3.10	F-C	INT-3-3508	F-1000	MS-52A-7			X						/							MS-52A-7-AC-H&R-53A
F3.10	F-C	INT-3-3502	F-1000	MS-53A-5			X					/								MS-53A-5-AC-R-52A
F3.10	F-C	INT-2-2540	F-1000	MS-60-15			X				X									MS-60-15-SI-H-56
F3.10	F-C	INT-2-2540	F-1000	MS-60-16			X				X									MS-60-16-SI-H&R-56
F3.10	F-C	INT-2-2540	F-1000	MS-60-17			X				X									MS-60-17-SI-H-56
F3.10	F-C	INT-2-2543	F-1000	MS-60-18			X						/							MS-60-18-SI-H&R-550
F3.10	F-C	INT-2-2101	F-1000	MS-H-2-4			X				X									
F3.10	F-C	INT-2-2201	F-1000	MS-H-355			X					/								
F3.10	F-C	INT-2-2201	F-1000	MS-H-356			X					/								
F3.10	F-C	INT-2-2101	F-1000	MS-H-361			X				X									
F3.10	F-C	INT-2-2101	F-1000	MS-H-362			X				X									
F3.10	F-C	INT-2-2401	F-1000	MS-H-367			X					/								
F3.10	F-C	INT-2-2301	F-1000	MS-H-372			X						/							
F3.10	F-C	INT-2-2201	F-1000	MS-R-1-1			X					/								
F3.10	F-C	INT-2-2300	F-1000	MS-R-100			X					/								
F3.10	F-C	INT-2-2101	F-1000	MS-R-2-1			X				X									
F3.10	F-C	INT-2-2200	F-1000	MS-R-200			X					/								
F3.10	F-C	INT-2-2301	F-1000	MS-R-3-3			X						/							
F3.10	F-C	INT-2-2401	F-1000	MS-R-4-1			X						/							
F3.10	F-C	INT-1-4101	F-1000	PWR-127A			X				X									
F3.10	F-C	INT-2-2521	F-1000	PWR-144A			X					/								
F3.10	F-C	INT-1-4301	F-1000	PWR-146A			X					/								
F3.10	F-C	INT-1-4301	F-1000	PWR-146B			X					/								
F3.10	F-C	INT-2-2523	F-1000	PWR-147A			X					/								
F3.10	F-C	INT-1-4301	F-1000	PWR-147B			X					/								
F3.10	F-C	INT-2-2523	F-1000	PWR-148A			X						/							
F3.10	F-C	INT-2-2523	F-1000	PWR-149A			X					/								
F3.10	F-C	INT-2-2522	F-1000	PWR-154A			X				X									
F3.10	F-C	INT-2-2522	F-1000	PWR-154B			X				X									
F3.10	F-C	INT-3-3600	F-1000	SFPC-R-2			X					/								
F3.10	F-C	INT-3-3600	F-1000	SFPC-R-3			X					/								
F3.10	F-C	INT-3-3600	F-1000	SFPC-R-5			X					/								
F3.10	F-C	INT-3-3600	F-1000	SFPC-R-6			X					/								
F3.10	F-C	INT-3-3601	F-1000	SFPC-R-8			X				X									
F3.10	F-C	INT-3-3601	F-1000	SFPC-R-9			X				X									
F3.10	F-C	INT-1-4202	F-1000	SI-H-167			X				X									
F3.10	F-C	INT-1-4202	F-1000	SI-H-168			X				X									
F3.10	F-C	INT-2-2541	F-1000	SI-H-170			X						/							
F3.10	F-C	INT-2-2541	F-1000	SI-H-171			X						/							
F3.10	F-C	INT-2-2541	F-1000	SI-H-172			X						/							
F3.10	F-C	INT-2-2541	F-1000	SI-H-173			X						/							
F3.10	F-C	INT-2-2541	F-1000	SI-H-175			X						/							
F3.10	F-C	INT-2-2541	F-1000	SI-H-177			X						/							

NSID COMPONENT SURVEILLANCE SCHEDULE

Effective Date 06/21/89 Process Date 03/09/90

COMPONENT: COMPONENT STANDARD SUPPORTS

83S	83S		INT		EXAMINATION METHODS			FIRST INTERVAL			SECOND INTERVAL			THIRD INTERVAL			FOURTH INTERVAL			
ITEM NUMBER	CATEGORY NUMBER	DESCRIPTION	SKETCH NUMBER	IDENT. NUMBER	VOL.	SUR.	VIS.	1ST PER	2ND PER	3RD PER	1ST PER	2ND PER	3RD PER	1ST PER	2ND PER	3RD PER	1ST PER	2ND PER	3RD PER	REMARKS
F3.10	F-C	INT-2-2524	F-1000	SI-H-187			X				X									
F3.10	F-C	INT-2-2542	F-1000	SI-H-195			X						/							
F3.10	F-C	INT-2-2542	F-1000	SI-H-196			X						/							
F3.10	F-C	INT-2-2542	F-1000	SI-H-197			X						/							
F3.10	F-C	INT-2-2542	F-1000	SI-H-198			X						/							
F3.10	F-C	INT-2-2542	F-1000	SI-H-199			X						/							
F3.10	F-C	INT-2-2521	F-1000	SI-H-207			X					/								
F3.10	F-C	INT-2-2521	F-1000	SI-H-208			X					/								
F3.10	F-C	INT-2-2521	F-1000	SI-H-209			X					/								
F3.10	F-C	INT-2-2521	F-1000	SI-H-210			X					/								
F3.10	F-C	INT-2-2521	F-1000	SI-H-211			X					/								
F3.10	F-C	INT-2-2521	F-1000	SI-H-212			X					/								
F3.10	F-C	INT-1-4301	F-1000	SI-H-213			X					/								
F3.10	F-C	INT-2-2532	F-1000	SI-H-555			X					/								
F3.10	F-C	INT-2-2540	F-1000	SI-H60-7			X					/								
F3.10	F-C	INT-2-2532	F-1000	SI-R-358			X				X									MS-361-1B-SI-R-358
F3.10	F-C	INT-2-2530	F-1000	SI-R-404			X						/							
F3.10	F-C	INT-3-3410	F-1000	SW-H-29A			X				X									
F3.10	F-C	INT-3-3414	F-1000	SW-H-29B			X						/							
F3.10	F-C	INT-3-3413	F-1000	SW-H-41A			X					/								
F3.10	F-C	INT-3-3413	F-1000	SW-H-42A			X					/								
F3.10	F-C	INT-3-3409	F-1000	SW-H-85A			X				X									
F3.10	F-C	INT-1-5100	F-1000	1-5100-31			X					/								
F3.10	F-C	INT-1-5100	F-1000	1-5100-32			X					/								
F3.10	F-C	INT-1-5100	F-1000	1-5100-33			X						/							
F3.10	F-C	INT-1-5100	F-1000	1-5100-34			X						/							
F3.10	F-C	INT-2-1101	F-1000	2-1101-31			X					/								
F3.10	F-C	INT-2-1101	F-1000	2-1101-32			X					/								
F3.10	F-C	INT-2-1101	F-1000	2-1101-33			X						/							
F3.10	F-C	INT-2-1101	F-1000	2-1101-34			X						/							
F3.10	F-C	INT-2-3100	F-1000	2-3100-31			X					/								
F3.10	F-C	INT-2-3100	F-1000	2-3100-32			X					/								
F3.10	F-C	INT-2-3110	F-1000	2-3110-31			X					/								
F3.10	F-C	INT-2-3110	F-1000	2-3110-32			X					/								
F3.10	F-C	INT-2-3110	F-1000	2-3110-33			X					/								
F3.10	F-C	INT-2-3130	F-1000	2-3130-31			X					/								
F3.10	F-C	INT-2-3130	F-1000	2-3130-32			X					/								
F3.10	F-C	INT-2-3130	F-1000	2-3130-33			X						/							
F3.10	F-C	INT-2-2100	F-1000	2100-PR-4			X					/								
F3.10	F-C	INT-2-2100	F-1000	2100-PR-5			X					/								
F3.10	F-C	INT-2-2101	F-1000	2101MSR-2			X				X									
F3.10	F-C	INT-2-2102	F-1000	2102-PR-4			X				X									
F3.10	F-C	INT-2-2102	F-1000	2102-PR-5			X				X									

NSID COMPONENT SURVEILLANCE SCHEDULE

Effective Date 06/21/89 Process Date 03/09/90

COMPONENT: COMPONENT STANDARD SUPPORTS

83S	83S		INT		EXAMINATION METHODS			FIRST INTERVAL			SECOND INTERVAL			THIRD INTERVAL			FOURTH INTERVAL			
ITEM NUMBER	CATEGORY NUMBER	DESCRIPTION	SKETCH NUMBER	IDENT. NUMBER	VOL.	SUR.	VIS.	1ST PER	2ND PER	3RD PER	1ST PER	2ND PER	3RD PER	1ST PER	2ND PER	3RD PER	1ST PER	2ND PER	3RD PER	REMARKS
F3.10	F-C	INT-2-2200	F-1000	2200-PR-4			X					/								
F3.10	F-C	INT-2-2200	F-1000	2200-PR-5			X					/								
F3.10	F-C	INT-2-2202	F-1000	2202-PR-4			X					/								
F3.10	F-C	INT-2-2202	F-1000	2202-PR-5			X					/								
F3.10	F-C	INT-2-2300	F-1000	2300-PR-1			X				X									
F3.10	F-C	INT-2-2300	F-1000	2300-PR-2			X				X									
F3.10	F-C	INT-2-2300	F-1000	2300-PR-3			X				X									
F3.10	F-C	INT-2-2302	F-1000	2302-PR-1			X				X									
F3.10	F-C	INT-2-2302	F-1000	2302-PR-2			X				X									
F3.10	F-C	INT-2-2302	F-1000	2302-PR-3			X				X									
F3.10	F-C	INT-2-2400	F-1000	2400-PR-1			X						/							
F3.10	F-C	INT-2-2400	F-1000	2400-PR-2			X						/							
F3.10	F-C	INT-2-2400	F-1000	2400-PR-3			X				X									
F3.10	F-C	INT-2-2402	F-1000	2402-PR-1			X				X									
F3.10	F-C	INT-2-2402	F-1000	2402-PR-2			X				X									
F3.10	F-C	INT-2-2402	F-1000	2402-PR-3			X				X									
F3.10	F-C	INT-3-1100	F-1000	3-1100-31			X					/								
F3.10	F-C	INT-3-1100	F-1000	3-1100-32			X					/								
F3.10	F-C	INT-3-1110	F-1000	3-1110-31			X				X									
F3.10	F-C	INT-3-1120	F-1000	3-1120-31			X				X									
F3.10	F-C	INT-3-1130	F-1000	3-1130-31			X				X									
F3.10	F-C	INT-3-1140	F-1000	3-1140-31			X				X									
F3.10	F-C	INT-3-1140	F-1000	3-1140-32			X				X									
F3.10	F-C	INT-3-1150	F-1000	3-1150-31			X						/							
F3.10	F-C	INT-3-1170	F-1000	3-1170-31			X				X									
F3.10	F-C	INT-3-1170	F-1000	3-1170-32			X				X									
F3.10	F-C	INT-3-1170	F-1000	3-1170-33			X					/								
F3.10	F-C	INT-3-1170	F-1000	3-1170-34			X					/								
F3.10	F-C	INT-3-1180	F-1000	3-1180-31			X					/								
F3.10	F-C	INT-3-1180	F-1000	3-1180-32			X					/								
F3.10	F-C	INT-3-1190	F-1000	3-1190-31			X					/								
F3.10	F-C	INT-3-1190	F-1000	3-1190-32			X					/								
F3.10	F-C	INT-3-1200	F-1000	3-1200-31			X						/							
F3.10	F-C	INT-3-1200	F-1000	3-1200-32			X						/							
F3.10	F-C	INT-3-1210	F-1000	3-1210-31			X						/							
F3.10	F-C	INT-3-1210	F-1000	3-1210-32			X						/							
F3.10	F-C	INT-3-1220	F-1000	3-1220-31			X						/							
F3.10	F-C	INT-3-1300	F-1000	3-1300-31			X						/							
F3.10	F-C	INT-3-1500	F-1000	3-1500-31			X				X									
F3.10	F-C	INT-3-1500	F-1000	3-1500-32			X				X									
F3.10	F-C	INT-3-1500	F-1000	3-1500-33			X				X									
F3.10	F-C	INT-3-1510	F-1000	3-1510-34			X					/								
F3.10	F-C	INT-3-1510	F-1000	3-1510-35			X					/								

NSID COMPONENT SURVEILLANCE SCHEDULE

Effective Date 06/21/89 Process Date 03/09/90

COMPONENT: COMPONENT STANDARD SUPPORTS

83S	83S		INT		EXAMINATION METHODS			FIRST INTERVAL			SECOND INTERVAL			THIRD INTERVAL			FOURTH INTERVAL			
ITEM NUMBER	CATEGORY NUMBER	DESCRIPTION	SKETCH NUMBER	IDENT. NUMBER	VOL.	SUR.	VIS.	1ST PER	2ND PER	3RD PER	1ST PER	2ND PER	3RD PER	1ST PER	2ND PER	3RD PER	1ST PER	2ND PER	3RD PER	REMARKS
F3.10	F-C	INT-3-1520	F-1000	3-1520-31			X				X									
F3.10	F-C	INT-3-1520	F-1000	3-1520-32			X					/								
F3.10	F-C	INT-3-1520	F-1000	3-1520-33			X						/							
F3.10	F-C	INT-3-1530	F-1000	3-1530-31			X					/								
F3.10	F-C	INT-3-1530	F-1000	3-1530-32			X					/								
F3.10	F-C	INT-3-1530	F-1000	3-1530-33			X					/								
F3.10	F-C	INT-3-1540	F-1000	3-1540-31			X						/							
F3.10	F-C	INT-3-1540	F-1000	3-1540-32			X						/							
F3.10	F-C	INT-3-4100	F-1000	3-4100-34			X				X									
F3.10	F-C	INT-3-4100	F-1000	3-4100-35			X				X									
F3.10	F-C	INT-3-4100	F-1000	3-4100-36			X				X									
F3.10	F-C	INT-3-4110	F-1000	3-4110-31			X				X									
F3.10	F-C	INT-3-4110	F-1000	3-4110-32			X				X									
F3.10	F-C	INT-3-4110	F-1000	3-4110-33			X				X									
F3.10	F-C	INT-3-4120	F-1000	3-4120-31			X						/							
F3.10	F-C	INT-3-4120	F-1000	3-4120-32			X						/							
F3.10	F-C	INT-3-4130	F-1000	3-4130-31			X					/								
F3.10	F-C	INT-3-4130	F-1000	3-4130-32			X					/								
F3.10	F-C	INT-3-4130	F-1000	3-4130-33			X					/								
F3.10	F-C	INT-3-4140	F-1000	3-4140-31			X					/								
F3.10	F-C	INT-3-4140	F-1000	3-4140-33			X					/								
F3.10	F-C	INT-3-4150	F-1000	3-4150-32			X					/								
F3.10	F-C	INT-3-4160	F-1000	3-4160-31			X						/							
F3.10	F-C	INT-3-4160	F-1000	3-4160-32			X						/							
F3.10	F-C	INT-3-4160	F-1000	3-4160-33			X						/							
F3.10	F-C	INT-3-4160	F-1000	3-4160-34			X						/							
F3.10	F-C	INT-3-4170	F-1000	3-4170-01			X					/								
F3.10	F-C	INT-3-4170	F-1000	3-4170-31			X						/							
F3.10	F-C	INT-3-4170	F-1000	3-4170-32			X						/							
F3.10	F-C	INT-3-4180	F-1000	3-4180-34			X						/							
F3.10	F-C	INT-3-4180	F-1000	3-4180-35			X						/							
F3.10	F-C	INT-3-4180	F-1000	3-4180-36			X						/							
F3.10	F-C	INT-3-4190	F-1000	3-4190-31			X				X									
F3.10	F-C	INT-3-4190	F-1000	3-4190-32			X				X									
F3.10	F-C	INT-3-4190	F-1000	3-4190-33			X				X									
F3.10	F-C	INT-2-2500	F-1000	AC-H-10-1			X						/							
F3.10	F-C	INT-1-4201	F-1000	AC-H-10-2			X				X									
F3.10	F-C	INT-1-4201	F-1000	AC-H-10-3			X				X									
F3.10	F-C	INT-1-4201	F-1000	AC-H-10-4			X				X									
F3.10	F-C	INT-1-4201	F-1000	AC-H-10-5			X				X									
F3.10	F-C	INT-1-4201	F-1000	AC-H-10-6			X				X									
F3.10	F-C	INT-1-4201	F-1000	AC-H-10-7			X				X									
F3.10	F-C	INT-1-4201	F-1000	AC-H-10-8			X				X									

NSID COMPONENT SURVEILLANCE SCHEDULE

Effective Date 06/21/89 Process Date 03/09/90

COMPONENT: COMPONENT STANDARD SUPPORTS

83S	83S		INT		EXAMINATION METHODS			FIRST INTERVAL			SECOND INTERVAL			THIRD INTERVAL			FOURTH INTERVAL			
ITEM NUMBER	CATEGORY NUMBER	DESCRIPTION	SKETCH NUMBER	IDENT. NUMBER	VOL.	SUR.	VIS.	1ST PER	2ND PER	3RD PER	1ST PER	2ND PER	3RD PER	1ST PER	2ND PER	3RD PER	1ST PER	2ND PER	3RD PER	REMARKS
F3.10	F-C	INT-3-3509	F-1000	AC-H-13-1			X				X									
F3.10	F-C	INT-3-3504	F-1000	AC-H-52-1			X				X									
F3.10	F-C	INT-3-3504	F-1000	AC-H-52-4			X				X									
F3.10	F-C	INT-3-3504	F-1000	AC-H-52-6			X				X									
F3.10	F-C	INT-3-3504	F-1000	AC-H-52-8			X				X									
F3.10	F-C	INT-3-3501	F-1000	AC-H-541A			X				X									
F3.10	F-C	INT-2-2510	F-1000	AC-H-9-10			X				X									
F3.10	F-C	INT-2-2511	F-1000	AC-H-9-12			X				X									
F3.10	F-C	INT-2-2511	F-1000	AC-H-9-4A			X				X									
F3.10	F-C	INT-2-2520	F-1000	AC-H-90-1			X				X									
F3.10	F-C	INT-2-2520	F-1000	AC-H-90-2			X				X									
F3.10	F-C	INT-3-3504	F-1000	AC-R-52-7			X				X									
F3.10	F-C	INT-3-3505	F-1000	AC-R-53-1			X						/							
F3.10	F-C	INT-2-2511	F-1000	AC-R-9-11			X				X									
F3.10	F-C	INT-2-2500	F-1000	AC-T-57-2			X						/							
F3.10	F-C	INT-2-2202	F-1000	BFD-H-5-2			X					/								
F3.10	F-C	INT-2-2402	F-1000	BFD-H-8-2			X						/							
F3.10	F-C	INT-1-4103	F-1000	CH-H-79-1			X						/							
F3.10	F-C	INT-3-3600	F-1000	H1(WEST.)			X					/								
F3.10	F-C	INT-3-3410	F-1000	M/S-12A-6			X				X									M/S-12A-6-SW-R-12B
F3.10	F-C	INT-3-3413	F-1000	M/S-12E-1			X					/								M/S-12E-1-SW-H&R-11E
F3.10	F-C	INT-3-3413	F-1000	M/S-12E-2			X					/								M/S-12E-2-SW-H-11E
F3.10	F-C	INT-3-3413	F-1000	M/S-12E-3			X					/								M/S-12E-3-SW-R-11E
F3.10	F-C	INT-3-3509	F-1000	M/S-13-3A			X				X									M/S-13-3A-AC-R-14
F3.10	F-C	INT-3-3509	F-1000	M/S-13-3B			X				X									M/S-13-3B-AC-H-14
F3.10	F-C	INT-3-3501	F-1000	M/S-167-1			X				X									M/S-167-1-AC-H&R-168
F3.10	F-C	INT-3-3501	F-1000	M/S-167-2			X				X									M/S-167-2-AC-H&R-168
F3.10	F-C	INT-3-3501	F-1000	M/S-167-3			X				X									M/S-167-3-AC-H&R-168
F3.10	F-C	INT-3-3501	F-1000	M/S-167-4			X				X									M/S-167-4-AC-H&R-168
F3.10	F-C	INT-3-3503	F-1000	M/S-167-5			X					/								M/S-167-5-AC-H&R-168
F3.10	F-C	INT-3-3501	F-1000	M/S-515-1			X				X									M/S-515-1-AC-H&R-168
F3.10	F-C	INT-3-3503	F-1000	M/S-515-2			X					/								M/S-515-2-AC-R-516
F3.10	F-C	INT-3-3502	F-1000	M/S-53-10			X					/								M/S-53-10-AC-R-52
F3.10	F-C	INT-3-3415	F-1000	MS-1093-2			X					/								M/S-1093-2-SWN-H&R-1099
F3.10	F-C	INT-3-3415	F-1000	MS-1093-3			X					/								M/S-1093-3-SWN-H&R-1099
F3.10	F-C	INT-3-3412	F-1000	MS-11A-20			X					/								M/S-11A-20-SW-H-11B
F3.10	F-C	INT-3-3410	F-1000	MS-11A-21			X				X									M/S-11A-21-SW-R-12B
F3.10	F-C	INT-3-3409	F-1000	MS-11E-23			X				X									M/S-11E-23-SW-H-12E
F3.10	F-C	INT-3-3409	F-1000	MS-11E-40			X				X									M/S-11E-40-SW-H&R-12E
F3.10	F-C	INT-3-3410	F-1000	MS-12A-31			X				X									M/S-12A-31-SW-R-12C
F3.10	F-C	INT-3-3410	F-1000	MS-12A-32			X				X									M/S-12A-32-SW-H-12C

NSID COMPONENT SURVEILLANCE SCHEDULE

Effective Date 06/21/89 Process Date 03/09/90

COMPONENT: COMPONENT STANDARD SUPPORTS

83S	83S		INT		EXAMINATION METHODS			FIRST INTERVAL			SECOND INTERVAL			THIRD INTERVAL			FOURTH INTERVAL			
ITEM NUMBER	CATEGORY NUMBER	DESCRIPTION	SKETCH NUMBER	IDENT. NUMBER	VOL.	SUR.	VIS.	1ST PER	2ND PER	3RD PER	1ST PER	2ND PER	3RD PER	1ST PER	2ND PER	3RD PER	1ST PER	2ND PER	3RD PER	REMARKS
F3.10	F-C	INT-3-3410	F-1000	MS-12A-33			X				X									M/S-12-33-SW-H&R-12C
F3.10	F-C	INT-3-3410	F-1000	MS-12A-34			X				X									M/S-12A-34-SW-H-12C
F3.10	F-C	INT-3-3410	F-1000	MS-12A-35			X				X									M/S-12A-35-SW-H&R-12C
F3.10	F-C	INT-3-3410	F-1000	MS-12A-36			X				X									M/S-12A-36-SW-H-12C
F3.10	F-C	INT-3-3410	F-1000	MS-12A-37			X				X									M/S-12A-37-SW-H-12C
F3.10	F-C	INT-3-3410	F-1000	MS-12A-38			X				X									M/S-12A-38-SW-H-12C
F3.10	F-C	INT-3-3410	F-1000	MS-12A-39			X				X									M/S-12A-39-SW-R-12C
F3.10	F-C	INT-3-3414	F-1000	MS-12C-14			X						/							M/S-12C-14-SW-H&R-11C
F3.10	F-C	INT-3-3403	F-1000	MS-409-10			X													M/S-409-10-SWN-H-408 INACCESSIBLE REFERENCE TABLE 4.0
F3.10	F-C	INT-3-3403	F-1000	MS-409-11			X													M/S-409-11-SWN-H-408 INACCESSIBLE REFERENCE TABLE 4.0
F3.10	F-C	INT-3-3403	F-1000	MS-409-12			X													M/S-409-12-SWN-H&R-408 INACCESSIBLE REFERENCE TABLE 4.0
F3.10	F-C	INT-3-3403	F-1000	MS-409-13			X													M/S-409-13-SWN-H-408 INACCESSIBLE REFERENCE TABLE 4.0
F3.10	F-C	INT-3-3403	F-1000	MS-409-15			X													M/S-409-15-SWN-H&R-408 INACCESSIBLE REFERENCE TABLE 4.0
F3.10	F-C	INT-3-3509	F-1000	MS-525-14			X				X									M/S-525-14-AC-H&R-13
F3.10	F-C	INT-2-2301	F-1000	MS-H-371A			X						/							
F3.10	F-C	INT-3-3502	F-1000	MS53-7-AC			X					/								M/S-53-7-AC-H-52A
F3.10	F-C	INT-3-3502	F-1000	MS53-8-AC			X					/								M/S-53-8-AC-H&R-52A
F3.10	F-C	INT-1-4500	F-1000	PW-H-63-1			X				X									
F3.10	F-C	INT-1-4507	F-1000	RC-H-61-1			X				X									
F3.10	F-C	INT-1-4507	F-1000	RC-H-61-9			X				X									
F3.10	F-C	INT-1-4506	F-1000	RC-H-62-1			X					/								
F3.10	F-C	INT-1-4507	F-1000	RC-R-61-5			X				X									
F3.10	F-C	INT-1-4508	F-1000	RC-R-64-5			X						/							
F3.10	F-C	INT-1-4508	F-1000	RC-R-64-9			X						/							
F3.10	F-C	INT-3-3600	F-1000	SFPC-V-12			X					/								
F3.10	F-C	INT-3-3601	F-1000	SFPC-V-13			X					/								
F3.10	F-C	INT-3-3600	F-1000	SFPC-V-15			X					/								
F3.10	F-C	INT-2-2530	F-1000	SI-A-60-6			X						/							
F3.10	F-C	INT-2-2522	F-1000	SI-H-167A			X				X									
F3.10	F-C	INT-1-4101	F-1000	SI-H-179A			X				X									
F3.10	F-C	INT-2-2540	F-1000	SI-H-56-4			X				X									
F3.10	F-C	INT-2-2540	F-1000	SI-H-56-7			X				X									
F3.10	F-C	INT-2-2540	F-1000	SI-H-56-9			X					/								

NSID COMPONENT SURVEILLANCE SCHEDULE

Effective Date 06/21/89 Process Date 03/09/90

COMPONENT: COMPONENT STANDARD SUPPORTS

83S	83S		INT		EXAMINATION METHODS			FIRST INTERVAL			SECOND INTERVAL			THIRD INTERVAL			FOURTH INTERVAL			
ITEM NUMBER	CATEGORY NUMBER	DESCRIPTION	SKETCH NUMBER	IDENT. NUMBER	VOL.	SUR.	VIS.	1ST PER	2ND PER	3RD PER	1ST PER	2ND PER	3RD PER	1ST PER	2ND PER	3RD PER	1ST PER	2ND PER	3RD PER	REMARKS
F3.10	F-C	INT-2-2530	F-1000	SI-H-60-1			X				X									
F3.10	F-C	INT-2-2530	F-1000	SI-H-60-3			X						/							
F3.10	F-C	INT-2-2530	F-1000	SI-H-60-4			X						/							
F3.10	F-C	INT-2-2530	F-1000	SI-H-60-5			X						/							
F3.10	F-C	INT-2-2530	F-1000	SI-H-60-7			X						/							
F3.10	F-C	INT-2-2530	F-1000	SI-H-60-8			X						/							
F3.10	F-C	INT-2-2530	F-1000	SI-H-60-9			X						/							
F3.10	F-C	INT-2-2530	F-1000	SI-H-89-1			X				X									
F3.10	F-C	INT-2-2530	F-1000	SI-H-93-1			X						/							
F3.10	F-C	INT-2-2530	F-1000	SI-H-94-1			X					/								
F3.10	F-C	INT-2-2540	F-1000	SI-R-56-5			X				X									
F3.10	F-C	INT-2-2530	F-1000	SI-R-89-2			X				X									MS-60-1-SI-R-89-2
F3.10	F-C	INT-3-3601	F-1000	SVPC-V-14			X				X									
F3.10	F-C	INT-3-3413	F-1000	SW-H&R-39			X					/								
F3.10	F-C	INT-3-3409	F-1000	SW-H&R-83			X				X									
F3.10	F-C	INT-3-3409	F-1000	SW-H&R-87			X				X									
F3.10	F-C	INT-3-3412	F-1000	SW-H&R-91			X				X									
F3.10	F-C	INT-3-3403	F-1000	SWN-A-197			X					/								
F3.10	F-C	INT-3-3402	F-1000	SWN-A-199			X				X									
F3.10	F-C	INT-3-3407	F-1000	SWN-A-561			X					/								
F3.10	F-C	INT-3-3404	F-1000	SWN-H-551			X				X									
F3.10	F-C	INT-3-3405	F-1000	SWN-H-557			X					/								
F3.10	F-C	INT-3-3406	F-1000	SWN-R-532			X						/							
F3.10	F-C	INT-3-3402	F-1000	SWN-R-547			X				X									
F3.10	F-C	INT-3-3404	F-1000	SWN-R-548			X				X									
F3.10	F-C	INT-3-3404	F-1000	SWN-R-550			X				X									
F3.10	F-C	INT-3-3405	F-1000	SWN-R-556			X					/								
F3.10	F-C	INT-3-3407	F-1000	SWN-R-560			X					/								
F3.10	F-C	INT-3-3407	F-1000	SWN-R-563			X					/								
F3.10	F-C	INT-3-3407	F-1000	SWN-R-564			X					/								
F3.10	F-C	INT-1-2100	F-1000	1-2100-SUP			X						/							
F3.10	F-C	INT-3-3501	F-1000	1-AC-HR149			X				X									M/S-167-1-AC-H&R-149
F3.10	F-C	INT-2-1110	F-1000	2-1110-SUP			X					/								
F3.10	F-C	INT-2-1200	F-1000	2-1200-1WS			X					/								
F3.10	F-C	INT-2-1200	F-1000	2-1200-2WS			X					/								
F3.10	F-C	INT-2-1200	F-1000	2-1200-3WS			X					/								
F3.10	F-C	INT-2-1200	F-1000	2-1200-4WS			X					/								
F3.10	F-C	INT-2-1220	F-1000	2-1220-1WS			X						/							
F3.10	F-C	INT-2-1220	F-1000	2-1220-2WS			X						/							
F3.10	F-C	INT-2-1220	F-1000	2-1220-3WS			X						/							
F3.10	F-C	INT-2-1220	F-1000	2-1220-4WS			X						/							
F3.10	F-C	INT-2-1310	F-1000	2-1310-1WS			X					/								
F3.10	F-C	INT-2-1310	F-1000	2-1310-2WS			X					/								

NSID COMPONENT SURVEILLANCE SCHEDULE

Effective Date 06/21/89 Process Date 03/09/90

COMPONENT: COMPONENT STANDARD SUPPORTS

83S	83S		INT		EXAMINATION METHODS			FIRST INTERVAL			SECOND INTERVAL			THIRD INTERVAL			FOURTH INTERVAL			
ITEM NUMBER	CATEGORY NUMBER	DESCRIPTION	SKETCH NUMBER	IDENT. NUMBER	VOL.	SUR.	VIS.	1ST PER	2ND PER	3RD PER	1ST PER	2ND PER	3RD PER	1ST PER	2ND PER	3RD PER	1ST PER	2ND PER	3RD PER	REMARKS
F3.10	F-C	INT-2-1310	F-1000	2-1310-3WS			X					/								
F3.10	F-C	INT-2-1310	F-1000	2-1310-4WS			X					/								
F3.10	F-C	INT-2-1320	F-1000	2-1320-1WS			X					/								
F3.10	F-C	INT-2-1320	F-1000	2-1320-2WS			X					/								
F3.10	F-C	INT-2-1320	F-1000	2-1320-3WS			X					/								
F3.10	F-C	INT-2-1320	F-1000	2-1320-4WS			X					/								
F3.10	F-C	INT-2-2200	F-1000	2200HMS-13			X					/								
F3.10	F-C	INT-2-2200	F-1000	2200HMS-14			X					/								
F3.10	F-C	INT-2-2200	F-1000	2200HMS-15			X					/								
F3.10	F-C	INT-2-2202	F-1000	2202HBF-17			X					/								
F3.10	F-C	INT-2-2202	F-1000	2202HBF-18			X					/								
F3.10	F-C	INT-2-2202	F-1000	2202HBF-19			X					/								
F3.10	F-C	INT-2-2400	F-1000	2400-HMS-9			X						/							
F3.10	F-C	INT-2-2400	F-1000	2400HMS-10			X						/							
F3.10	F-C	INT-2-2400	F-1000	2400HMS-11			X						/							
F3.10	F-C	INT-2-2400	F-1000	2400HMS-12			X						/							
F3.10	F-C	INT-2-2402	F-1000	2402HBF-14			X				X									
F3.10	F-C	INT-2-2402	F-1000	2402HBF-15			X				X									
F3.10	F-C	INT-2-2402	F-1000	2402HBF-16			X				X									
F3.10	F-C	INT-2-2521	F-1000	2521PWR134			X					/								
F3.10	F-C	INT-2-2523	F-1000	2523PWR135			X						/							
F3.10	F-C	INT-2-2523	F-1000	2523PWR137			X						/							
F3.10	F-C	INT-3-1160	F-1000	3-1160-31J			X				X									
F3.10	F-C	INT-3-1160	F-1000	3-1160-31L			X				X									
F3.10	F-C	INT-3-1160	F-1000	3-1160-32J			X				X									
F3.10	F-C	INT-3-1160	F-1000	3-1160-32L			X				X									
F3.10	F-C	INT-3-1160	F-1000	3-1160-33J			X				X									
F3.10	F-C	INT-3-1160	F-1000	3-1160-33L			X				X									
F3.10	F-C	INT-3-3411	F-1000	32-SWH-11A			X						/							M/S-12A-32-SW-H-11A
F3.10	F-C	INT-3-3414	F-1000	32-SWH-11C			X						/							M/S-12A-32-SW-H-11C
F3.10	F-C	INT-3-3410	F-1000	32-SWH-12B			X				X									M/S-12A-32-SW-H-12B
F3.10	F-C	INT-3-3411	F-1000	33-SWHR11A			X						/							M/S-12A-33-SW-H&R-11A
F3.10	F-C	INT-3-3410	F-1000	33-SWHR12B			X				X									M/S-12A-33-SW-H&R-12B
F3.10	F-C	INT-3-3414	F-1000	33SWHR-11C			X						/							M/S-12-33-SW-H&R-11C
F3.10	F-C	INT-3-3411	F-1000	34-SWH-11A			X						/							M/S-12A-34-SW-H-11A
F3.10	F-C	INT-3-3414	F-1000	34-SWH-11C			X						/							M/S-12A-34-SW-H-11C
F3.10	F-C	INT-3-3410	F-1000	34-SWH-12B			X				X									M/S-12A-34-SW-H-12B
F3.10	F-C	INT-3-3411	F-1000	35-SWHR11A			X						/							M/S-12A-35-SW-H&R-11A
F3.10	F-C	INT-3-3410	F-1000	35-SWHR12B			X				X									M/S-12A-35-SW-H&R-12B
F3.10	F-C	INT-3-3414	F-1000	35SWHR-11C			X						/							M/S-12A-35-SW-H&R-11C
F3.10	F-C	INT-3-3414	F-1000	36-SWH-11C			X						/							M/S-12A-36-SW-H-11C
F3.10	F-C	INT-3-3414	F-1000	37SWHR-11C			X						/							M/S-12A-37-SW-H&R-11C
F3.10	F-C	INT-3-3414	F-1000	38-SWH-11C			X						/							M/S-12A-38-SW-H-11C

NSID COMPONENT SURVEILLANCE SCHEDULE

Effective Date 06/21/89 Process Date 03/09/90

COMPONENT: COMPONENT STANDARD SUPPORTS

83S	83S		INT		EXAMINATION METHODS			FIRST INTERVAL			SECOND INTERVAL			THIRD INTERVAL			FOURTH INTERVAL			
ITEM NUMBER	CATEGORY NUMBER	DESCRIPTION	SKETCH NUMBER	IDENT. NUMBER	VOL.	SUR.	VIS.	1ST PER	2ND PER	3RD PER	1ST PER	2ND PER	3RD PER	1ST PER	2ND PER	3RD PER	1ST PER	2ND PER	3RD PER	REMARKS
F3.10	F-C	INT-3-3414	F-1000	39SWHR-11C			X						/							M/S-12A-39-SW-H&R-11C
F3.10	F-C	INT-3-3500	F-1000	AC-H&R-209			X				X									
F3.10	F-C	INT-3-3503	F-1000	AC-H&R-477			X					/								
F3.10	F-C	INT-3-3503	F-1000	AC-H&R-516			X					/								
F3.10	F-C	INT-3-3500	F-1000	AC-H&R-519			X				X									
F3.10	F-C	INT-3-3500	F-1000	AC-H&R-521			X				X									
F3.10	F-C	INT-3-3500	F-1000	AC-H&R-523			X				X									
F3.10	F-C	INT-3-3500	F-1000	AC-H&R-524			X				X									
F3.10	F-C	INT-3-3500	F-1000	AC-H&R-528			X				X									
F3.10	F-C	INT-3-3500	F-1000	AC-H&R-529			X				X									
F3.10	F-C	INT-3-3500	F-1000	AC-H&R-530			X				X									
F3.10	F-C	INT-3-3500	F-1000	AC-H&R-532			X				X									
F3.10	F-C	INT-3-3501	F-1000	AC-H&R-541			X				X									
F3.10	F-C	INT-3-3501	F-1000	AC-H&R-551			X				X									
F3.10	F-C	INT-3-3503	F-1000	AC-H&R-562			X					/								
F3.10	F-C	INT-2-2511	F-1000	AC-H&R-9-5			X				X									
F3.10	F-C	INT-3-3503	F-1000	AC-H&R467A			X					/								
F3.10	F-C	INT-3-3504	F-1000	AC-H&R52-2			X				X									
F3.10	F-C	INT-3-3504	F-1000	AC-H&R52-3			X				X									
F3.10	F-C	INT-3-3504	F-1000	AC-H&R52-5			X				X									
F3.10	F-C	INT-3-3505	F-1000	AC-H&R53-2			X						/							
F3.10	F-C	INT-3-3505	F-1000	AC-H&R53-3			X						/							
F3.10	F-C	INT-3-3505	F-1000	AC-H&R53-4			X						/							
F3.10	F-C	INT-3-3505	F-1000	AC-H&R53-5			X						/							
F3.10	F-C	INT-2-2500	F-1000	AC-H-10-11			X						/							
F3.10	F-C	INT-2-2500	F-1000	AC-H-10-14			X				X									
F3.10	F-C	INT-2-2500	F-1000	AC-H-10-15			X				X									
F3.10	F-C	INT-2-2500	F-1000	AC-H-10-16			X				X									
F3.10	F-C	INT-2-2500	F-1000	AC-H-10-17			X				X									
F3.10	F-C	INT-3-3509	F-1000	AC-H-13-3B			X				X									
F3.10	F-C	INT-3-3509	F-1000	AC-H-14-12			X				X									
F3.10	F-C	INT-3-3502	F-1000	AC-H-14-17			X					/								
F3.10	F-C	INT-3-3506	F-1000	AC-H-148-5			X						/							
F3.10	F-C	INT-3-3600	F-1000	AC-H-328-5			X					/								
F3.10	F-C	INT-3-3600	F-1000	AC-H-328-6			X					/								
F3.10	F-C	INT-3-3600	F-1000	AC-H-328-9			X					/								
F3.10	F-C	INT-3-3506	F-1000	AC-H-515-3			X						/							
F3.10	F-C	INT-3-3502	F-1000	AC-H-52-10			X					/								
F3.10	F-C	INT-3-3502	F-1000	AC-H-52-11			X					/								
F3.10	F-C	INT-3-3502	F-1000	AC-H-52-12			X					/								
F3.10	F-C	INT-3-3502	F-1000	AC-H-52-13			X					/								
F3.10	F-C	INT-3-3504	F-1000	AC-H-52A-1			X				X									
F3.10	F-C	INT-3-3504	F-1000	AC-H-52A-4			X				X									

NSID COMPONENT SURVEILLANCE SCHEDULE

Effective Date 06/21/89 Process Date 03/09/90

COMPONENT: COMPONENT STANDARD SUPPORTS

83S	83S		INT		EXAMINATION METHODS			FIRST INTERVAL			SECOND INTERVAL			THIRD INTERVAL			FOURTH INTERVAL			
ITEM NUMBER	CATEGORY NUMBER	DESCRIPTION	SKETCH NUMBER	IDENT. NUMBER	VOL.	SUR.	VIS.	1ST PER	2ND PER	3RD PER	1ST PER	2ND PER	3RD PER	1ST PER	2ND PER	3RD PER	1ST PER	2ND PER	3RD PER	REMARKS
F3.10	F-C	INT-3-3504	F-1000	AC-H-52A-8			X				X									
F3.10	F-C	INT-3-3504	F-1000	AC-H-52A-9			X				X									
F3.10	F-C	INT-3-3508	F-1000	AC-H-53-15			X						/							
F3.10	F-C	INT-3-3508	F-1000	AC-H-53-17			X						/							
F3.10	F-C	INT-3-3508	F-1000	AC-H-53-20			X						/							
F3.10	F-C	INT-3-3508	F-1000	AC-H-53A-8			X						/							
F3.10	F-C	INT-3-3508	F-1000	AC-H-53A-9			X						/							
F3.10	F-C	INT-2-2500	F-1000	AC-H10-18C			X					/								
F3.10	F-C	INT-3-3502	F-1000	AC-H52A-10			X					/								
F3.10	F-C	INT-3-3502	F-1000	AC-H52A-11			X					/								
F3.10	F-C	INT-3-3508	F-1000	AC-H53A-12			X						/							
F3.10	F-C	INT-3-3508	F-1000	AC-H53A-13			X						/							
F3.10	F-C	INT-2-2500	F-1000	AC-H653-1A			X					/								
F3.10	F-C	INT-3-3509	F-1000	AC-HR-13-2			X				X									
F3.10	F-C	INT-3-3507	F-1000	AC-HR-53-6			X						/							
F3.10	F-C	INT-3-3507	F-1000	AC-HR-53-7			X						/							
F3.10	F-C	INT-3-3507	F-1000	AC-HR-53-8			X						/							
F3.10	F-C	INT-3-3507	F-1000	AC-HR-53-9			X						/							
F3.10	F-C	INT-2-2511	F-1000	AC-HR-9-13			X				X									
F3.10	F-C	INT-2-2511	F-1000	AC-HR-9-14			X				X									
F3.10	F-C	INT-3-3507	F-1000	AC-HR13-1A			X						/							
F3.10	F-C	INT-3-3506	F-1000	AC-HR148-2			X						/							
F3.10	F-C	INT-3-3506	F-1000	AC-HR148-3			X						/							
F3.10	F-C	INT-3-3506	F-1000	AC-HR148-4			X						/							
F3.10	F-C	INT-3-3503	F-1000	AC-HR168-4			X					/								
F3.10	F-C	INT-3-3601	F-1000	AC-HR325-1			X				X									
F3.10	F-C	INT-3-3601	F-1000	AC-HR325-2			X				X									
F3.10	F-C	INT-3-3601	F-1000	AC-HR325-3			X				X									
F3.10	F-C	INT-3-3601	F-1000	AC-HR326-1			X				X									
F3.10	F-C	INT-3-3600	F-1000	AC-HR327-1			X					/								
F3.10	F-C	INT-3-3600	F-1000	AC-HR327-8			X					/								
F3.10	F-C	INT-3-3600	F-1000	AC-HR328-2			X					/								
F3.10	F-C	INT-3-3600	F-1000	AC-HR328-4			X					/								
F3.10	F-C	INT-3-3600	F-1000	AC-HR328-7			X					/								
F3.10	F-C	INT-3-3600	F-1000	AC-HR328-8			X					/								
F3.10	F-C	INT-3-3601	F-1000	AC-HR329-1			X				X									
F3.10	F-C	INT-3-3601	F-1000	AC-HR329-2			X				X									
F3.10	F-C	INT-3-3601	F-1000	AC-HR329-4			X				X									
F3.10	F-C	INT-3-3601	F-1000	AC-HR329-9			X				X									
F3.10	F-C	INT-3-3506	F-1000	AC-HR515-1			X						/							
F3.10	F-C	INT-3-3506	F-1000	AC-HR515-4			X						/							
F3.10	F-C	INT-3-3506	F-1000	AC-HR515-5			X						/							
F3.10	F-C	INT-3-3506	F-1000	AC-HR515-6			X						/							

NSID COMPONENT SURVEILLANCE SCHEDULE

Effective Date 06/21/89 Process Date 03/09/90

COMPONENT: COMPONENT STANDARD SUPPORTS

83S	83S		INT		EXAMINATION METHODS			FIRST INTERVAL			SECOND INTERVAL			THIRD INTERVAL			FOURTH INTERVAL			
ITEM NUMBER	CATEGORY NUMBER	DESCRIPTION	SKETCH NUMBER	IDENT. NUMBER	VOL.	SUR.	VIS.	1ST PER	2ND PER	3RD PER	1ST PER	2ND PER	3RD PER	1ST PER	2ND PER	3RD PER	1ST PER	2ND PER	3RD PER	REMARKS
F3.10	F-C	INT-3-3504	F-1000	AC-HR52A-3			X				X									
F3.10	F-C	INT-3-3504	F-1000	AC-HR52A-5			X				X									
F3.10	F-C	INT-3-3504	F-1000	AC-HR52A-6			X				X									
F3.10	F-C	INT-3-3507	F-1000	AC-HR53-11			X						/							
F3.10	F-C	INT-3-3507	F-1000	AC-HR53-12			X						/							
F3.10	F-C	INT-3-3507	F-1000	AC-HR53-13			X						/							
F3.10	F-C	INT-3-3505	F-1000	AC-HR53A-1			X						/							
F3.10	F-C	INT-3-3505	F-1000	AC-HR53A-3			X						/							
F3.10	F-C	INT-3-3507	F-1000	AC-HR53A-4			X						/							
F3.10	F-C	INT-3-3507	F-1000	AC-HR53A-6			X						/							
F3.10	F-C	INT-3-3507	F-1000	AC-HR53A-7			X						/							
F3.10	F-C	INT-2-2500	F-1000	AC-R-10-12			X				X									
F3.10	F-C	INT-2-2500	F-1000	AC-R-10-13			X				X									
F3.10	F-C	INT-3-3509	F-1000	AC-R-13-3A			X				X									
F3.10	F-C	INT-3-3500	F-1000	AC-R-209-1			X				X									
F3.10	F-C	INT-3-3500	F-1000	AC-R-211-2			X				X									
F3.10	F-C	INT-3-3600	F-1000	AC-R-328-3			X					/								
F3.10	F-C	INT-3-3601	F-1000	AC-R-329-3			X				X									
F3.10	F-C	INT-3-3601	F-1000	AC-R-329-6			X				X									
F3.10	F-C	INT-3-3506	F-1000	AC-R-515-2			X						/							
F3.10	F-C	INT-3-3501	F-1000	AC-R-52-1A			X				X									
F3.10	F-C	INT-3-3504	F-1000	AC-R-52A-2			X				X									
F3.10	F-C	INT-3-3504	F-1000	AC-R-52A-7			X				X									
F3.10	F-C	INT-3-3507	F-1000	AC-R-53-10			X						/							
F3.10	F-C	INT-3-3508	F-1000	AC-R-53-16			X						/							
F3.10	F-C	INT-3-3508	F-1000	AC-R-53-18			X						/							
F3.10	F-C	INT-3-3508	F-1000	AC-R-53-21			X						/							
F3.10	F-C	INT-3-3508	F-1000	AC-R-53-22			X						/							
F3.10	F-C	INT-3-3507	F-1000	AC-R-53A-5			X						/							
F3.10	F-C	INT-2-2500	F-1000	AC-R10-18A			X				X									
F3.10	F-C	INT-2-2500	F-1000	AC-R10-18B			X				X									
F3.10	F-C	INT-3-3505	F-1000	AC-R148-1B			X						/							
F3.10	F-C	INT-3-3600	F-1000	AC-R328-10			X					/								
F3.10	F-C	INT-3-3508	F-1000	AC-R53-17A			X						/							
F3.10	F-C	INT-3-3508	F-1000	AC-R53-17B			X						/							
F3.10	F-C	INT-3-3508	F-1000	AC-R53A-11			X						/							
F3.10	F-C	INT-3-3508	F-1000	AC-R53A-14			X						/							
F3.10	F-C	INT-3-3505	F-1000	ACHR-167-1			X						/							
F3.10	F-C	INT-3-3505	F-1000	ACHR-167-2			X						/							
F3.10	F-C	INT-3-3505	F-1000	ACHR-167-3			X						/							
F3.10	F-C	INT-3-3505	F-1000	ACHR-167-4			X						/							
F3.10	F-C	INT-3-3506	F-1000	ACHR-167-5			X						/							
F3.10	F-C	INT-3-3506	F-1000	ACHR-167-6			X						/							

NSID COMPONENT SURVEILLANCE SCHEDULE

Effective Date 06/21/89 Process Date 03/09/90

COMPONENT: COMPONENT STANDARD SUPPORTS

83S	83S		INT		EXAMINATION METHODS			FIRST INTERVAL			SECOND INTERVAL			THIRD INTERVAL			FOURTH INTERVAL			
ITEM NUMBER	CATEGORY NUMBER	DESCRIPTION	SKETCH NUMBER	IDENT. NUMBER	VOL.	SUR.	VIS.	1ST PER	2ND PER	3RD PER	1ST PER	2ND PER	3RD PER	1ST PER	2ND PER	3RD PER	1ST PER	2ND PER	3RD PER	REMARKS
F3.10	F-C	INT-3-3508	F-1000	ACHR-53-19			X						/							
F3.10	F-C	INT-3-3505	F-1000	ACHR148-1A			X						/							
F3.10	F-C	INT-3-3505	F-1000	ACHR515-72			X						/							
F3.10	F-C	INT-3-3508	F-1000	ACHR53-17C			X						/							
F3.10	F-C	INT-3-3707	F-1000	BF1001-10A			X						/							
F3.10	F-C	INT-3-3703	F-1000	BFDH1003-2			X						/							
F3.10	F-C	INT-3-3703	F-1000	BFDH1003-5			X						/							
F3.10	F-C	INT-3-3703	F-1000	BFDH1003-6			X						/							
F3.10	F-C	INT-3-3703	F-1000	BFDH1003-8			X						/							
F3.10	F-C	INT-3-3703	F-1000	BFDH1003-9			X						/							
F3.10	F-C	INT-3-3703	F-1000	BFDH1005-7			X						/							
F3.10	F-C	INT-3-3703	F-1000	BFDR1003-3			X						/							
F3.10	F-C	INT-3-3703	F-1000	BFDR1003-7			X						/							
F3.10	F-C	INT-3-3703	F-1000	BFDR1005-6			X						/							
F3.10	F-C	INT-3-3705	F-1000	BFH-1001-3			X						/							
F3.10	F-C	INT-3-3705	F-1000	BFH-1001-4			X						/							
F3.10	F-C	INT-3-3705	F-1000	BFH-1001-7			X						/							
F3.10	F-C	INT-3-3705	F-1000	BFH-1001-8			X						/							
F3.10	F-C	INT-3-3707	F-1000	BFH-1001-9			X						/							
F3.10	F-C	INT-3-3704	F-1000	BFH-1002-6			X					/								
F3.10	F-C	INT-3-3704	F-1000	BFH-1002-8			X					/								
F3.10	F-C	INT-3-3704	F-1000	BFH-1002-9			X					/								
F3.10	F-C	INT-3-3706	F-1000	BFH-1004-2			X						/							
F3.10	F-C	INT-3-3706	F-1000	BFH-1004-3			X						/							
F3.10	F-C	INT-3-3706	F-1000	BFH-1004-4			X						/							
F3.10	F-C	INT-3-3708	F-1000	BFH-1004-6			X					/								
F3.10	F-C	INT-3-3708	F-1000	BFH-1004-7			X					/								
F3.10	F-C	INT-3-3708	F-1000	BFH-1004-9			X					/								
F3.10	F-C	INT-3-3706	F-1000	BFH-1006-2			X						/							
F3.10	F-C	INT-3-3706	F-1000	BFH-1006-3			X						/							
F3.10	F-C	INT-3-3705	F-1000	BFH-1007-1			X						/							
F3.10	F-C	INT-3-3705	F-1000	BFH-1007-3			X						/							
F3.10	F-C	INT-3-3705	F-1000	BFH-1007-5			X						/							
F3.10	F-C	INT-3-3707	F-1000	BFH1001-10			X						/							
F3.10	F-C	INT-3-3707	F-1000	BFH1001-11			X						/							
F3.10	F-C	INT-3-3707	F-1000	BFH1001-12			X						/							
F3.10	F-C	INT-3-3707	F-1000	BFH1001-14			X						/							
F3.10	F-C	INT-3-3705	F-1000	BFH1001-1B			X						/							
F3.10	F-C	INT-3-3705	F-1000	BFH1001-5B			X						/							
F3.10	F-C	INT-3-3705	F-1000	BFH1001-5C			X						/							
F3.10	F-C	INT-3-3705	F-1000	BFH1001-5D			X						/							
F3.10	F-C	INT-3-3705	F-1000	BFH1001-5E			X						/							
F3.10	F-C	INT-3-3705	F-1000	BFH1001-5F			X						/							

NSID COMPONENT SURVEILLANCE SCHEDULE

Effective Date 06/21/89 Process Date 03/09/90

COMPONENT: COMPONENT STANDARD SUPPORTS

83S	83S		INT		EXAMINATION METHODS			FIRST INTERVAL			SECOND INTERVAL			THIRD INTERVAL			FOURTH INTERVAL			
ITEM NUMBER	CATEGORY NUMBER	DESCRIPTION	SKETCH NUMBER	IDENT. NUMBER	VOL.	SUR.	VIS.	1ST PER	2ND PER	3RD PER	1ST PER	2ND PER	3RD PER	1ST PER	2ND PER	3RD PER	1ST PER	2ND PER	3RD PER	REMARKS
F3.10	F-C	INT-3-3705	F-1000	BFH1001-5G			X						/							
F3.10	F-C	INT-3-3704	F-1000	BFH1002-10			X					/								
F3.10	F-C	INT-3-3704	F-1000	BFH1002-11			X					/								
F3.10	F-C	INT-3-3704	F-1000	BFH1002-12			X					/								
F3.10	F-C	INT-3-3704	F-1000	BFH1002-1B			X					/								
F3.10	F-C	INT-3-3704	F-1000	BFH1002-1C			X					/								
F3.10	F-C	INT-3-3704	F-1000	BFH1002-1D			X					/								
F3.10	F-C	INT-3-3704	F-1000	BFH1002-1E			X					/								
F3.10	F-C	INT-3-3704	F-1000	BFH1002-1F			X					/								
F3.10	F-C	INT-3-3704	F-1000	BFH1002-1G			X					/								
F3.10	F-C	INT-3-3703	F-1000	BFH1003-1A			X						/							
F3.10	F-C	INT-3-3703	F-1000	BFH1003-4B			X						/							
F3.10	F-C	INT-3-3703	F-1000	BFH1003-4C			X						/							
F3.10	F-C	INT-3-3703	F-1000	BFH1003-4D			X						/							
F3.10	F-C	INT-3-3703	F-1000	BFH1003-4E			X						/							
F3.10	F-C	INT-3-3703	F-1000	BFH1003-4F			X						/							
F3.10	F-C	INT-3-3703	F-1000	BFH1003-4G			X						/							
F3.10	F-C	INT-3-3706	F-1000	BFH1004-1B			X						/							
F3.10	F-C	INT-3-3706	F-1000	BFH1004-1C			X						/							
F3.10	F-C	INT-3-3706	F-1000	BFH1004-1D			X						/							
F3.10	F-C	INT-3-3706	F-1000	BFH1004-1E			X						/							
F3.10	F-C	INT-3-3706	F-1000	BFH1004-1F			X						/							
F3.10	F-C	INT-3-3706	F-1000	BFH1004-1G			X						/							
F3.10	F-C	INT-3-3703	F-1000	BFH1005-1A			X						/							
F3.10	F-C	INT-3-3703	F-1000	BFH1005-4B			X						/							
F3.10	F-C	INT-3-3703	F-1000	BFH1005-4C			X						/							
F3.10	F-C	INT-3-3703	F-1000	BFH1005-4D			X						/							
F3.10	F-C	INT-3-3703	F-1000	BFH1005-4E			X						/							
F3.10	F-C	INT-3-3703	F-1000	BFH1005-4F			X						/							
F3.10	F-C	INT-3-3706	F-1000	BFH1006-1B			X						/							
F3.10	F-C	INT-3-3706	F-1000	BFH1006-1C			X						/							
F3.10	F-C	INT-3-3706	F-1000	BFH1006-1D			X						/							
F3.10	F-C	INT-3-3706	F-1000	BFH1006-1E			X						/							
F3.10	F-C	INT-3-3706	F-1000	BFH1006-1F			X						/							
F3.10	F-C	INT-3-3706	F-1000	BFH1006-4B			X						/							
F3.10	F-C	INT-3-3705	F-1000	BFH1007-2B			X						/							
F3.10	F-C	INT-3-3705	F-1000	BFH1007-2C			X						/							
F3.10	F-C	INT-3-3705	F-1000	BFH1007-2D			X						/							
F3.10	F-C	INT-3-3705	F-1000	BFH1007-2E			X						/							
F3.10	F-C	INT-3-3705	F-1000	BFH1007-2F			X						/							
F3.10	F-C	INT-3-3704	F-1000	BFH1008-2B			X					/								
F3.10	F-C	INT-3-3704	F-1000	BFH1008-2C			X					/								
F3.10	F-C	INT-3-3704	F-1000	BFH1008-2D			X					/								

NSID COMPONENT SURVEILLANCE SCHEDULE

Effective Date 06/21/89 Process Date 03/09/90

COMPONENT: COMPONENT STANDARD SUPPORTS

83S	83S		INT		EXAMINATION METHODS			FIRST INTERVAL			SECOND INTERVAL			THIRD INTERVAL			FOURTH INTERVAL			
ITEM NUMBER	CATEGORY NUMBER	DESCRIPTION	SKETCH NUMBER	IDENT. NUMBER	VOL.	SUR.	VIS.	1ST PER	2ND PER	3RD PER	1ST PER	2ND PER	3RD PER	1ST PER	2ND PER	3RD PER	1ST PER	2ND PER	3RD PER	REMARKS
F3.10	F-C	INT-3-3704	F-1000	BFH1008-2E			X					/								
F3.10	F-C	INT-3-3704	F-1000	BFH1008-2F			X					/								
F3.10	F-C	INT-3-3704	F-1000	BFH1008-3B			X					/								
F3.10	F-C	INT-3-3704	F-1000	BFHR1002-2			X					/								
F3.10	F-C	INT-3-3704	F-1000	BFHR1002-3			X					/								
F3.10	F-C	INT-3-3704	F-1000	BFHR1002-4			X					/								
F3.10	F-C	INT-3-3704	F-1000	BFHR1002-5			X					/								
F3.10	F-C	INT-3-3703	F-1000	BFHR1005-2			X						/							
F3.10	F-C	INT-3-3703	F-1000	BFHR1005-3			X						/							
F3.10	F-C	INT-3-3703	F-1000	BFHR1005-5			X						/							
F3.10	F-C	INT-3-3704	F-1000	BFHR1008-1			X					/								
F3.10	F-C	INT-3-3704	F-1000	BFR-1002-7			X					/								
F3.10	F-C	INT-3-3708	F-1000	BFR-1004-5			X					/								
F3.10	F-C	INT-3-3708	F-1000	BFR-1004-8			X					/								
F3.10	F-C	INT-3-3705	F-1000	BFR-1007-4			X						/							
F3.10	F-C	INT-3-3707	F-1000	BFR1001-13			X						/							
F3.10	F-C	INT-3-3706	F-1000	BFR1001-1A			X						/							
F3.10	F-C	INT-3-3705	F-1000	BFR1001-5A			X						/							
F3.10	F-C	INT-3-3705	F-1000	BFR1001-5H			X						/							
F3.10	F-C	INT-3-3704	F-1000	BFR1002-13			X					/								
F3.10	F-C	INT-3-3704	F-1000	BFR1002-1A			X					/								
F3.10	F-C	INT-3-3704	F-1000	BFR1002-1H			X					/								
F3.10	F-C	INT-3-3703	F-1000	BFR1003-10			X						/							
F3.10	F-C	INT-3-3703	F-1000	BFR1003-1B			X						/							
F3.10	F-C	INT-3-3703	F-1000	BFR1003-4A			X						/							
F3.10	F-C	INT-3-3703	F-1000	BFR1003-4H			X						/							
F3.10	F-C	INT-3-3704	F-1000	BFR1004-1A			X						/							
F3.10	F-C	INT-3-3706	F-1000	BFR1004-1H			X						/							
F3.10	F-C	INT-3-3703	F-1000	BFR1005-1B			X						/							
F3.10	F-C	INT-3-3703	F-1000	BFR1005-4A			X						/							
F3.10	F-C	INT-3-3703	F-1000	BFR1005-4G			X						/							
F3.10	F-C	INT-3-3706	F-1000	BFR1006-1A			X						/							
F3.10	F-C	INT-3-3706	F-1000	BFR1006-1G			X						/							
F3.10	F-C	INT-3-3706	F-1000	BFR1006-4A			X						/							
F3.10	F-C	INT-3-3705	F-1000	BFR1007-2A			X						/							
F3.10	F-C	INT-3-3705	F-1000	BFR1007-2G			X						/							
F3.10	F-C	INT-3-3704	F-1000	BFR1008-2A			X					/								
F3.10	F-C	INT-3-3704	F-1000	BFR1008-2G			X					/								
F3.10	F-C	INT-3-3704	F-1000	BFR1008-3A			X					/								
F3.10	F-C	INT-1-4108	F-1000	CH-H-41-15			X				X									
F3.10	F-C	INT-1-4407	F-1000	CH-H-44-18			X						/							
F3.10	F-C	INT-3-3700	F-1000	CT-H1071-1			X						/							
F3.10	F-C	INT-3-3700	F-1000	CT-H1071-4			X						/							

NSID COMPONENT SURVEILLANCE SCHEDULE

Effective Date 06/21/89 Process Date 03/09/90

COMPONENT: COMPONENT STANDARD SUPPORTS

83S	83S		INT		EXAMINATION METHODS			FIRST INTERVAL			SECOND INTERVAL			THIRD INTERVAL			FOURTH INTERVAL			
ITEM NUMBER	CATEGORY NUMBER	DESCRIPTION	SKETCH NUMBER	IDENT. NUMBER	VOL.	SUR.	VIS.	1ST PER	2ND PER	3RD PER	1ST PER	2ND PER	3RD PER	1ST PER	2ND PER	3RD PER	1ST PER	2ND PER	3RD PER	REMARKS
F3.10	F-C	INT-3-3700	F-1000	CT-H1071-7			X						/							
F3.10	F-C	INT-3-3701	F-1000	CT-H1072-5			X				X									
F3.10	F-C	INT-3-3701	F-1000	CT-H1073-5			X				X									
F3.10	F-C	INT-3-3700	F-1000	CT-R1071-2			X						/							
F3.10	F-C	INT-3-3700	F-1000	CT-R1071-3			X						/							
F3.10	F-C	INT-3-3701	F-1000	CT-R1072-2			X				X									
F3.10	F-C	INT-3-3701	F-1000	CT-R1072-4			X				X									
F3.10	F-C	INT-3-3701	F-1000	CT-R1073-2			X				X									
F3.10	F-C	INT-3-3701	F-1000	CT-R1073-4			X				X									
F3.10	F-C	INT-3-3701	F-1000	CTH1074-4A			X				X									
F3.10	F-C	INT-3-3701	F-1000	CTH1075-2A			X				X									
F3.10	F-C	INT-3-3700	F-1000	CTHR1070-1			X						/							
F3.10	F-C	INT-3-3700	F-1000	CTHR1071-5			X						/							
F3.10	F-C	INT-3-3700	F-1000	CTHR1071-6			X						/							
F3.10	F-C	INT-3-3701	F-1000	CTHR1072-1			X				X									
F3.10	F-C	INT-3-3701	F-1000	CTHR1072-3			X				X									
F3.10	F-C	INT-3-3701	F-1000	CTHR1073-1			X				X									
F3.10	F-C	INT-3-3701	F-1000	CTHR1073-3			X				X									
F3.10	F-C	INT-3-3700	F-1000	CTHR1076-2			X						/							
F3.10	F-C	INT-3-3702	F-1000	M/S-1016-2			X						/							M/S-1016-2-V-R-1017
F3.10	F-C	INT-3-3702	F-1000	M/S-1016-3			X						/							M/S-1016-3-V-R-1017
F3.10	F-C	INT-3-3701	F-1000	M/S-1071-2			X				X									
F3.10	F-C	INT-3-3701	F-1000	M/S-1074-2			X				X									
F3.10	F-C	INT-3-3700	F-1000	M/S-1080-5			X						/							
F3.10	F-C	INT-3-3700	F-1000	M/S-1080-6			X						/							
F3.10	F-C	INT-3-3700	F-1000	M/S-1080-7			X						/							
F3.10	F-C	INT-3-3700	F-1000	M/S-1080-8			X						/							
F3.10	F-C	INT-3-3700	F-1000	M/S-1080-9			X						/							
F3.10	F-C	INT-3-3416	F-1000	M/S-1093-1			X					/								M/S-1093-1-SWN-H&R-1099
F3.10	F-C	INT-3-3415	F-1000	M/S-1093-2			X					/								M/S-1093-2-SWN-H&R-1096
F3.10	F-C	INT-3-3415	F-1000	M/S-1093-3			X					/								M/S-1093-3-SWN-H&R-1096
F3.10	F-C	INT-3-3412	F-1000	M/S-12A-32			X					/								M/S-12A-32-SW-H-11B
F3.10	F-C	INT-3-3412	F-1000	M/S-12A-33			X					/								M/S-12A-33-SW-H&R-11B
F3.10	F-C	INT-3-3412	F-1000	M/S-12A-34			X					/								M/S-12A-34-SW-H-11B
F3.10	F-C	INT-3-3412	F-1000	M/S-12A-35			X					/								M/S-12A-35-SW-H&R-11B
F3.10	F-C	INT-3-3412	F-1000	M/S-12A-36			X					/								M/S-12A-36-SW-H-11B
F3.10	F-C	INT-3-3412	F-1000	M/S-12A-37			X					/								M/S-12A-37-SW-H&R-11B
F3.10	F-C	INT-3-3412	F-1000	M/S-12A-38			X					/								M/S-12A-38-SW-H-11B
F3.10	F-C	INT-3-3412	F-1000	M/S-12A-39			X					/								M/S-12A-39-SW-H&R-11B
F3.10	F-C	INT-3-3501	F-1000	M/S-148-1A			X				X									M/S-148-1A-AC-H&R-149

NSID COMPONENT SURVEILLANCE SCHEDULE

Effective Date 06/21/89 Process Date 03/09/90

COMPONENT: COMPONENT STANDARD SUPPORTS

83S	83S		INT		EXAMINATION METHODS			FIRST INTERVAL			SECOND INTERVAL			THIRD INTERVAL			FOURTH INTERVAL			
ITEM NUMBER	CATEGORY NUMBER	DESCRIPTION	SKETCH NUMBER	IDENT. NUMBER	VOL.	SUR.	VIS.	1ST PER	2ND PER	3RD PER	1ST PER	2ND PER	3RD PER	1ST PER	2ND PER	3RD PER	1ST PER	2ND PER	3RD PER	REMARKS
F3.10	F-C	INT-3-3501	F-1000	M/S-148-1B			X				X									M/S-148-1B-AC-R-149
F3.10	F-C	INT-3-3509	F-1000	M/S-525-14			X				X									M/S-525-14-AC-H&R-14
F3.10	F-C	INT-2-2301	F-1000	MA-A1022-1			X						/							
F3.10	F-C	INT-2-2401	F-1000	MA-A1024-1			X						/							
F3.10	F-C	INT-3-3700	F-1000	MS-1080-10			X						/							
F3.10	F-C	INT-3-3700	F-1000	MS-1080-11			X						/							
F3.10	F-C	INT-3-3700	F-1000	MS-1080-12			X						/							
F3.10	F-C	INT-3-3700	F-1000	MS-1080-13			X						/							
F3.10	F-C	INT-3-3403	F-1000	MS-409-14A			X													M/S-409-14A-SWN-H&R-408 INACCESSIBLE REFERENCE TABLE 4.0
F3.10	F-C	INT-3-3403	F-1000	MS-409-16A			X													M/S-409-16A-SWN-H-408 INACCESSIBLE REFERENCE TABLE 4.0
F3.10	F-C	INT-3-3403	F-1000	MS-409-16B			X													M/S-409-16B-SWN-H&R-408 INACCESSIBLE REFERENCE TABLE 4.0
F3.10	F-C	INT-3-3403	F-1000	MS-409-17A			X													M/S-409-17A-SWN-H&R-408 INACCESSIBLE REFERENCE TABLE 4.0
F3.10	F-C	INT-3-3403	F-1000	MS-409-17B			X													M/S-409-17B-SWN-R-408 INACCESSIBLE REFERENCE TABLE 4.0
F3.10	F-C	INT-3-3407	F-1000	MS-502-405			X					/								M/S-502-SWN-H&R-405
F3.10	F-C	INT-3-3404	F-1000	MS-502-407			X				X									M/S-502-SWN-H&R-407
F3.10	F-C	INT-3-3405	F-1000	MS-502-411			X					/								M/S-502-SWN-H&R-411
F3.10	F-C	INT-3-3407	F-1000	MS-503-405			X					/								M/S-503-SWN-H&R-405
F3.10	F-C	INT-3-3404	F-1000	MS-503-407			X				X									M/S-503-SWN-H&R-407
F3.10	F-C	INT-3-3405	F-1000	MS-503-411			X					/								M/S-503-SWN-H&R-411
F3.10	F-C	INT-3-3407	F-1000	MS-504-405			X					/								M/S-504-SWN-H&R-405
F3.10	F-C	INT-3-3404	F-1000	MS-504-407			X				X									M/S-504-SWN-H&R-407
F3.10	F-C	INT-3-3405	F-1000	MS-504-411			X					/								M/S-504-SWN-H&R-411
F3.10	F-C	INT-3-3407	F-1000	MS-505-405			X					/								M/S-505-SWN-H&R-405
F3.10	F-C	INT-3-3404	F-1000	MS-505-407			X				X									M/S-505-SWN-H&R-407
F3.10	F-C	INT-3-3405	F-1000	MS-505-411			X					/								M/S-505-SWN-H&R-411
F3.10	F-C	INT-3-3407	F-1000	MS-506-405			X					/								M/S-506-SWN-H&R-405
F3.10	F-C	INT-3-3404	F-1000	MS-506-407			X				X									M/S-506-SWN-H&R-407
F3.10	F-C	INT-3-3405	F-1000	MS-506-411			X					/								M/S-506-SWN-H&R-411
F3.10	F-C	INT-3-3407	F-1000	MS-507-405			X					/								M/S-507-SWN-H&R-405
F3.10	F-C	INT-3-3404	F-1000	MS-507-407			X				X									M/S-507-SWN-H&R-407

NSID COMPONENT SURVEILLANCE SCHEDULE

Effective Date 06/21/89 Process Date 03/09/90

COMPONENT: COMPONENT STANDARD SUPPORTS

83S	83S		INT		EXAMINATION METHODS			FIRST INTERVAL			SECOND INTERVAL			THIRD INTERVAL			FOURTH INTERVAL			
ITEM NUMBER	CATEGORY NUMBER	DESCRIPTION	SKETCH NUMBER	IDENT. NUMBER	VOL.	SUR.	VIS.	1ST PER	2ND PER	3RD PER	1ST PER	2ND PER	3RD PER	1ST PER	2ND PER	3RD PER	1ST PER	2ND PER	3RD PER	REMARKS
F3.10	F-C	INT-3-3405	F-1000	MS-507-411			X					/								M/S-507-SWN-H&R-411
F3.10	F-C	INT-3-3407	F-1000	MS-508-405			X					/								M/S-508-SWN-H&R-405
F3.10	F-C	INT-3-3403	F-1000	MS-508-408			X					/								M/S-508-SWN-H&R-408
F3.10	F-C	INT-3-3402	F-1000	MS-508-409			X				X									M/S-508-SWN-H&R-409
F3.10	F-C	INT-3-3407	F-1000	MS-509-405			X					/								M/S-509-SWN-H&R-405
F3.10	F-C	INT-3-3403	F-1000	MS-509-408			X					/								M/S-509-SWN-H&R-408
F3.10	F-C	INT-3-3402	F-1000	MS-509-409			X				X									M/S-509-SWN-H&R-409
F3.10	F-C	INT-3-3407	F-1000	MS-510-405			X					/								M/S-510-SWN-H&R-405
F3.10	F-C	INT-3-3403	F-1000	MS-510-408			X					/								M/S-510-SWN-H&R-408
F3.10	F-C	INT-3-3402	F-1000	MS-510-409			X				X									M/S-510-SWN-H&R-409
F3.10	F-C	INT-3-3407	F-1000	MS-511-405			X					/								M/S-511-SWN-H&R-405
F3.10	F-C	INT-3-3403	F-1000	MS-511-408			X					/								M/S-511-SWN-H&R-408
F3.10	F-C	INT-3-3402	F-1000	MS-511-409			X				X									M/S-511-SWN-H&R-409
F3.10	F-C	INT-3-3404	F-1000	MS-525-409			X				X									M/S-525-SWN-H&R-409
F3.10	F-C	INT-3-3404	F-1000	MS-526-409			X				X									M/S-526-SWN-H&R-409
F3.10	F-C	INT-3-3404	F-1000	MS-563-407			X				X									M/S-563-SWN-R-407
F3.10	F-C	INT-2-2201	F-1000	MS-A1081-1			X					/								
F3.10	F-C	INT-3-3412	F-1000	MS12A6-11B			X					/								M/S-12A-6-SW-R-11B
F3.10	F-C	INT-3-3414	F-1000	MS12A6-11C			X						/							M/S-12A-6-SW-R-11C
F3.10	F-C	INT-3-3505	F-1000	MS167-1-AC			X						/							M/S-167-1-AC-H&R-148
F3.10	F-C	INT-3-3407	F-1000	MS508A-405			X					/								M/S-508A-SWN-H&R-405
F3.10	F-C	INT-3-3403	F-1000	MS508A-408			X					/								M/S-508A-SWN-H&R-408
F3.10	F-C	INT-3-3402	F-1000	MS508A-409			X				X									M/S-508A-SWN-H&R-409
F3.10	F-C	INT-3-3502	F-1000	MS53-10-AC			X					/								M/S-53-10-AC-H-52A
F3.10	F-C	INT-3-3502	F-1000	MS53-6-52A			X					/								M/S-53-6-AC-H&R-52A
F3.10	F-C	INT-3-3507	F-1000	MS53-6-53A			X						/							M/S-53-6-AC-H&R-53A
F3.10	F-C	INT-3-3507	F-1000	MS53-7-53A			X						/							M/S-53-7-AC-H&R-53A
F3.10	F-C	INT-3-3507	F-1000	MS53-8-53A			X						/							M/S-53-8-AC-H&R-53A
F3.10	F-C	INT-2-2101	F-1000	MSA-1020-1			X				X									
F3.10	F-C	INT-1-4501	F-1000	RC-H-342-1			X				X									
F3.10	F-C	INT-1-4502	F-1000	RC-H-343-1			X				X									
F3.10	F-C	INT-1-4503	F-1000	RC-H-344-1			X				X									
F3.10	F-C	INT-1-4504	F-1000	RC-H-61-10			X						/							
F3.10	F-C	INT-1-4504	F-1000	RC-H-61-13			X						/							
F3.10	F-C	INT-1-4506	F-1000	RC-H-62-2A			X					/								
F3.10	F-C	INT-1-4508	F-1000	RC-H-64-15			X						/							
F3.10	F-C	INT-1-4107	F-1000	RC-H753-15			X				X									
F3.10	F-C	INT-1-4107	F-1000	RC-H753-18			X				X									
F3.10	F-C	INT-1-4306	F-1000	RC-H754-11			X					/								
F3.10	F-C	INT-1-4306	F-1000	RC-H754-15			X					/								
F3.10	F-C	INT-1-4306	F-1000	RC-H754-16			X					/								
F3.10	F-C	INT-1-4507	F-1000	RC-HR-61-2			X				X									
F3.10	F-C	INT-1-4507	F-1000	RC-HR-61-3			X				X									

NSID COMPONENT SURVEILLANCE SCHEDULE

Effective Date 06/21/89 Process Date 03/09/90

COMPONENT: COMPONENT STANDARD SUPPORTS

83S	83S		INT		EXAMINATION METHODS			FIRST INTERVAL			SECOND INTERVAL			THIRD INTERVAL			FOURTH INTERVAL			
ITEM NUMBER	CATEGORY NUMBER	DESCRIPTION	SKETCH NUMBER	IDENT. NUMBER	VOL.	SUR.	VIS.	1ST PER	2ND PER	3RD PER	1ST PER	2ND PER	3RD PER	1ST PER	2ND PER	3RD PER	1ST PER	2ND PER	3RD PER	REMARKS
F3.10	F-C	INT-1-4507	F-1000	RC-HR-61-4			X				X									
F3.10	F-C	INT-1-4507	F-1000	RC-HR-61-6			X				X									
F3.10	F-C	INT-1-4507	F-1000	RC-HR-61-7			X				X									
F3.10	F-C	INT-1-4507	F-1000	RC-HR-61-8			X				X									
F3.10	F-C	INT-1-4506	F-1000	RC-HR-62-2			X					/								
F3.10	F-C	INT-1-4506	F-1000	RC-HR-62-3			X					/								
F3.10	F-C	INT-1-4508	F-1000	RC-HR-64-3			X						/							
F3.10	F-C	INT-1-4508	F-1000	RC-HR-64-4			X						/							
F3.10	F-C	INT-1-4508	F-1000	RC-HR-64-6			X						/							
F3.10	F-C	INT-1-4508	F-1000	RC-HR-64-7			X						/							
F3.10	F-C	INT-1-4508	F-1000	RC-HR-64-8			X						/							
F3.10	F-C	INT-1-4504	F-1000	RC-R-61-11			X						/							
F3.10	F-C	INT-1-4504	F-1000	RC-R-61-12			X						/							
F3.10	F-C	INT-1-4508	F-1000	RC-R-64-13			X						/							
F3.10	F-C	INT-1-4508	F-1000	RC-R-64-14			X						/							
F3.10	F-C	INT-1-4508	F-1000	RC-R-64-16			X						/							
F3.10	F-C	INT-1-4505	F-1000	RC-R-70-3A			X				X									
F3.10	F-C	INT-1-4107	F-1000	RC-R753-16			X				X									
F3.10	F-C	INT-1-4107	F-1000	RC-R753-17			X				X									
F3.10	F-C	INT-1-4306	F-1000	RC-R754-10			X					/								
F3.10	F-C	INT-1-4508	F-1000	RCHR-64-10			X						/							
F3.10	F-C	INT-1-4508	F-1000	RCHR-64-11			X						/							
F3.10	F-C	INT-1-4508	F-1000	RCHR-64-17			X						/							
F3.10	F-C	INT-1-4306	F-1000	RCHR-754-9			X					/								
F3.10	F-C	INT-1-4107	F-1000	RCHR753-19			X				X									
F3.10	F-C	INT-1-4306	F-1000	RCHR754-12			X					/								
F3.10	F-C	INT-1-4306	F-1000	RCHR754-13			X					/								
F3.10	F-C	INT-1-4306	F-1000	RCHR754-14			X					/								
F3.10	F-C	INT-1-4306	F-1000	RCR754-14A			X					/								
F3.10	F-C	INT-2-1120	F-1000	RHR-31-1WS			X						/							
F3.10	F-C	INT-2-1120	F-1000	RHR-31-2WS			X						/							
F3.10	F-C	INT-2-1120	F-1000	RHR-32-1WS			X						/							
F3.10	F-C	INT-2-1120	F-1000	RHR-32-2WS			X						/							
F3.10	F-C	INT-3-3416	F-1000	SHR1096-4A			X					/								
F3.10	F-C	INT-3-3416	F-1000	SHR1096-4B			X					/								
F3.10	F-C	INT-3-3402	F-1000	SHR409-14A			X													INACCESSIBLE REFERENCE TABLE 4.0
F3.10	F-C	INT-3-3402	F-1000	SHR409-16B			X													INACCESSIBLE REFERENCE TABLE 4.0
F3.10	F-C	INT-3-3402	F-1000	SHR409-17A			X													INACCESSIBLE REFERENCE TABLE 4.0
F3.10	F-C	INT-2-2542	F-1000	SI-A-361-7			X						/							
F3.10	F-C	INT-2-2541	F-1000	SI-H&R-174			X						/							

NSID COMPONENT SURVEILLANCE SCHEDULE

Effective Date 06/21/89 Process Date 03/09/90

COMPONENT: COMPONENT STANDARD SUPPORTS

83S	83S		INT		EXAMINATION METHODS			FIRST INTERVAL			SECOND INTERVAL			THIRD INTERVAL			FOURTH INTERVAL			
ITEM NUMBER	CATEGORY NUMBER	DESCRIPTION	SKETCH NUMBER	IDENT. NUMBER	VOL.	SUR.	VIS.	1ST PER	2ND PER	3RD PER	1ST PER	2ND PER	3RD PER	1ST PER	2ND PER	3RD PER	1ST PER	2ND PER	3RD PER	REMARKS
F3.10	F-C	INT-2-2532	F-1000	SI-H&R-214			X				X									
F3.10	F-C	INT-1-4406	F-1000	SI-H-16-27			X						/							
F3.10	F-C	INT-1-4406	F-1000	SI-H-16-29			X						/							
F3.10	F-C	INT-1-4207	F-1000	SI-H-16A-6			X				X									
F3.10	F-C	INT-2-2520	F-1000	SI-H-293-3			X						/							
F3.10	F-C	INT-2-2520	F-1000	SI-H-293-4			X					/								
F3.10	F-C	INT-2-2524	F-1000	SI-H-350-2			X				X									
F3.10	F-C	INT-1-4401	F-1000	SI-H-350-4			X					/								
F3.10	F-C	INT-1-4101	F-1000	SI-H-351-1			X				X									
F3.10	F-C	INT-1-4101	F-1000	SI-H-351-2			X				X									
F3.10	F-C	INT-2-2522	F-1000	SI-H-352-2			X				X									
F3.10	F-C	INT-2-2523	F-1000	SI-H-353-1			X						/							
F3.10	F-C	INT-1-4301	F-1000	SI-H-353-3			X					/								
F3.10	F-C	INT-1-4301	F-1000	SI-H-353-4			X					/								
F3.10	F-C	INT-1-4301	F-1000	SI-H-353-5			X					/								
F3.10	F-C	INT-2-2531	F-1000	SI-H-355-1			X				X									
F3.10	F-C	INT-2-2531	F-1000	SI-H-355-2			X				X									
F3.10	F-C	INT-2-2531	F-1000	SI-H-355-3			X				X									
F3.10	F-C	INT-2-2531	F-1000	SI-H-355-4			X				X									
F3.10	F-C	INT-2-2541	F-1000	SI-H-356-1			X						/							
F3.10	F-C	INT-2-2533	F-1000	SI-H-359-1			X					/								
F3.10	F-C	INT-2-2542	F-1000	SI-H-361-2			X						/							
F3.10	F-C	INT-2-2542	F-1000	SI-H-361-3			X						/							
F3.10	F-C	INT-2-2542	F-1000	SI-H-361-5			X						/							
F3.10	F-C	INT-2-2542	F-1000	SI-H-361-6			X						/							
F3.10	F-C	INT-2-2543	F-1000	SI-H-550-8			X						/							
F3.10	F-C	INT-2-2540	F-1000	SI-H-56-10			X					/								
F3.10	F-C	INT-1-4302	F-1000	SI-H-56-17			X						/							
F3.10	F-C	INT-1-4302	F-1000	SI-H-56-20			X					/								
F3.10	F-C	INT-1-4302	F-1000	SI-H-56-22			X					/								
F3.10	F-C	INT-2-2530	F-1000	SI-H-60-11			X						/							
F3.10	F-C	INT-1-4102	F-1000	SI-H843-12			X						/							
F3.10	F-C	INT-1-4102	F-1000	SI-H843-18			X						/							
F3.10	F-C	INT-1-4102	F-1000	SI-H843-19			X						/							
F3.10	F-C	INT-2-2540	F-1000	SI-HR-56-6			X				X									
F3.10	F-C	INT-2-2540	F-1000	SI-HR-56-8			X				X									
F3.10	F-C	INT-2-2520	F-1000	SI-HR293-2			X						/							
F3.10	F-C	INT-2-2524	F-1000	SI-HR350-1			X				X									
F3.10	F-C	INT-1-4401	F-1000	SI-HR350-3			X					/								
F3.10	F-C	INT-2-2523	F-1000	SI-HR353-2			X					/								
F3.10	F-C	INT-1-4406	F-1000	SI-R-16-25			X					/								
F3.10	F-C	INT-1-4406	F-1000	SI-R-16-28			X						/							
F3.10	F-C	INT-1-4207	F-1000	SI-R-16A-8			X				X									

NSID COMPONENT SURVEILLANCE SCHEDULE

Effective Date 06/21/89 Process Date 03/09/90

COMPONENT: COMPONENT STANDARD SUPPORTS

83S	83S		INT		EXAMINATION METHODS			FIRST INTERVAL			SECOND INTERVAL			THIRD INTERVAL			FOURTH INTERVAL			
ITEM NUMBER	CATEGORY NUMBER	DESCRIPTION	SKETCH NUMBER	IDENT. NUMBER	VOL.	SUR.	VIS.	1ST PER	2ND PER	3RD PER	1ST PER	2ND PER	3RD PER	1ST PER	2ND PER	3RD PER	1ST PER	2ND PER	3RD PER	REMARKS
F3.10	F-C	INT-2-2521	F-1000	SI-R-351-3			X					/								
F3.10	F-C	INT-2-2522	F-1000	SI-R-352-1			X				X									
F3.10	F-C	INT-2-2541	F-1000	SI-R-356-2			X						/							
F3.10	F-C	INT-2-2541	F-1000	SI-R-356-4			X						/							
F3.10	F-C	INT-2-2541	F-1000	SI-R-356-5			X						/							
F3.10	F-C	INT-2-2541	F-1000	SI-R-356-6			X						/							
F3.10	F-C	INT-2-2542	F-1000	SI-R-361-4			X						/							
F3.10	F-C	INT-2-2542	F-1000	SI-R-361-8			X						/							
F3.10	F-C	INT-2-2542	F-1000	SI-R-361-9			X						/							
F3.10	F-C	INT-2-2543	F-1000	SI-R-550-9			X						/							
F3.10	F-C	INT-1-4302	F-1000	SI-R-56-16			X						/							
F3.10	F-C	INT-1-4102	F-1000	SI-R-843-6			X				X									
F3.10	F-C	INT-2-2531	F-1000	SI-R355-1A			X				X									
F3.10	F-C	INT-2-2541	F-1000	SI-R356-2A			X						/							
F3.10	F-C	INT-2-2542	F-1000	SI-R361-1B			X						/							
F3.10	F-C	INT-1-4102	F-1000	SI-R843-10			X				X									
F3.10	F-C	INT-1-4102	F-1000	SI-R843-17			X						/							
F3.10	F-C	INT-1-4207	F-1000	SIH-16A-12			X				X									
F3.10	F-C	INT-1-4207	F-1000	SIH-16A-13			X				X									
F3.10	F-C	INT-1-4406	F-1000	SIHR-16-24			X					/								
F3.10	F-C	INT-1-4406	F-1000	SIHR-16-26			X						/							
F3.10	F-C	INT-1-4207	F-1000	SIHR-16A-7			X				X									
F3.10	F-C	INT-1-4207	F-1000	SIHR-16A-9			X				X									
F3.10	F-C	INT-2-2543	F-1000	SIHR-550-4			X						/							
F3.10	F-C	INT-2-2543	F-1000	SIHR-550-7			X						/							
F3.10	F-C	INT-2-2540	F-1000	SIHR-56-11			X					/								
F3.10	F-C	INT-1-4302	F-1000	SIHR-56-18			X					/								
F3.10	F-C	INT-1-4302	F-1000	SIHR-56-19			X					/								
F3.10	F-C	INT-1-4302	F-1000	SIHR-56-21			X					/								
F3.10	F-C	INT-1-4302	F-1000	SIHR-56-23			X					/								
F3.10	F-C	INT-1-4102	F-1000	SIHR-843-7			X				X									
F3.10	F-C	INT-1-4102	F-1000	SIHR-843-8			X				X									
F3.10	F-C	INT-1-4102	F-1000	SIHR-843-9			X				X									
F3.10	F-C	INT-1-4207	F-1000	SIHR16A-10			X				X									
F3.10	F-C	INT-2-2523	F-1000	SIHR353-2B			X						/							
F3.10	F-C	INT-2-2532	F-1000	SIHR358-1B			X						/							
F3.10	F-C	INT-2-2542	F-1000	SIHR361-1A			X						/							
F3.10	F-C	INT-2-2543	F-1000	SIHR550-10			X						/							
F3.10	F-C	INT-1-4102	F-1000	SIHR843-11			X						/							
F3.10	F-C	INT-1-4102	F-1000	SIHR843-13			X						/							
F3.10	F-C	INT-1-4102	F-1000	SIHR843-14			X						/							
F3.10	F-C	INT-1-4102	F-1000	SIHR843-15			X						/							
F3.10	F-C	INT-1-4102	F-1000	SIHR843-16			X						/							

NSID COMPONENT SURVEILLANCE SCHEDULE

Effective Date 06/21/89 Process Date 03/09/90

COMPONENT: COMPONENT STANDARD SUPPORTS

83S	83S		INT		EXAMINATION METHODS			FIRST INTERVAL			SECOND INTERVAL			THIRD INTERVAL			FOURTH INTERVAL			
ITEM NUMBER	CATEGORY NUMBER	DESCRIPTION	SKETCH NUMBER	IDENT. NUMBER	VOL.	SUR.	VIS.	1ST PER	2ND PER	3RD PER	1ST PER	2ND PER	3RD PER	1ST PER	2ND PER	3RD PER	1ST PER	2ND PER	3RD PER	REMARKS
F3.10	F-C	INT-1-4102	F-1000	SIHR843-5C			X				X									
F3.10	F-C	INT-1-4102	F-1000	SIHR843-7A			X				X									
F3.10	F-C	INT-1-4102	F-1000	SIHR843-8A			X				X									
F3.10	F-C	INT-1-4207	F-1000	SIR-16A-11			X				X									
F3.10	F-C	INT-3-3409	F-1000	SW-H-12E-2			X				X									
F3.10	F-C	INT-3-3411	F-1000	SW-H12A-31			X				X									
F3.10	F-C	INT-3-3411	F-1000	SW-H12A-32			X				X									
F3.10	F-C	INT-3-3411	F-1000	SW-H12A-37			X				X									
F3.10	F-C	INT-3-3411	F-1000	SW-H12A-38			X				X									
F3.10	F-C	INT-3-3410	F-1000	SW-H12C-14			X				X									
F3.10	F-C	INT-3-3411	F-1000	SW-HR-12-9			X				X									
F3.10	F-C	INT-3-3411	F-1000	SW-R-12A-6			X				X									
F3.10	F-C	INT-3-3411	F-1000	SW-R-12A-7			X				X									
F3.10	F-C	INT-3-3411	F-1000	SW-R-12A-8			X				X									
F3.10	F-C	INT-3-3409	F-1000	SW-R-12E-3			X				X									
F3.10	F-C	INT-3-3409	F-1000	SW-R-12E-4			X				X									
F3.10	F-C	INT-3-3411	F-1000	SW-R11A-21			X						/							
F3.10	F-C	INT-3-3412	F-1000	SW-R11B-24			X					/								
F3.10	F-C	INT-3-3410	F-1000	SW-R12C-13			X				X									
F3.10	F-C	INT-3-3409	F-1000	SW-R12D-19			X				X									
F3.10	F-C	INT-3-3409	F-1000	SW-R12E-3A			X				X									
F3.10	F-C	INT-3-3400	F-1000	SWA-1081-2			X				X									
F3.10	F-C	INT-3-3400	F-1000	SWA-1082-2			X				X									
F3.10	F-C	INT-3-3400	F-1000	SWA-1083-2			X				X									
F3.10	F-C	INT-3-3401	F-1000	SWA-1084-2			X					/								
F3.10	F-C	INT-3-3401	F-1000	SWA-1085-2			X					/								
F3.10	F-C	INT-3-3401	F-1000	SWA-1086-2			X					/								
F3.10	F-C	INT-3-3411	F-1000	SWH-11A-20			X					/								
F3.10	F-C	INT-3-3414	F-1000	SWH-11C-27			X						/							
F3.10	F-C	INT-3-3413	F-1000	SWH-11E-23			X					/								
F3.10	F-C	INT-3-3411	F-1000	SWH-12A-34			X				X									
F3.10	F-C	INT-3-3411	F-1000	SWH-12A-35			X				X									
F3.10	F-C	INT-3-3411	F-1000	SWH-12A-36			X				X									
F3.10	F-C	INT-3-3411	F-1000	SWH11A-20A			X					/								
F3.10	F-C	INT-3-3412	F-1000	SWH11B-20B			X					/								
F3.10	F-C	INT-3-3414	F-1000	SWH11C-27B			X						/							
F3.10	F-C	INT-3-3402	F-1000	SWH1219-13			X				X									
F3.10	F-C	INT-3-3411	F-1000	SWH12A-39A			X				X									
F3.10	F-C	INT-3-3402	F-1000	SWH409-14B			X													INACCESSIBLE REFERENCE TABLE 4.0
F3.10	F-C	INT-3-3402	F-1000	SWH409-14C			X													INACCESSIBLE REFERENCE TABLE 4.0

NSID COMPONENT SURVEILLANCE SCHEDULE

Effective Date 06/21/89 Process Date 03/09/90

COMPONENT: COMPONENT STANDARD SUPPORTS

83S	83S		INT		EXAMINATION METHODS			FIRST INTERVAL			SECOND INTERVAL			THIRD INTERVAL			FOURTH INTERVAL			
ITEM NUMBER	CATEGORY NUMBER	DESCRIPTION	SKETCH NUMBER	IDENT. NUMBER	VOL.	SUR.	VIS.	1ST PER	2ND PER	3RD PER	1ST PER	2ND PER	3RD PER	1ST PER	2ND PER	3RD PER	1ST PER	2ND PER	3RD PER	REMARKS
F3.10	F-C	INT-3-3402	F-1000	SWH409-14D			X													INACCESSIBLE REFERENCE TABLE 4.0
F3.10	F-C	INT-3-3402	F-1000	SWH409-16A			X													INACCESSIBLE REFERENCE TABLE 4.0
F3.10	F-C	INT-3-3409	F-1000	SWHR-12E-1			X				X									
F3.10	F-C	INT-3-3409	F-1000	SWHR-12E-5			X				X									
F3.10	F-C	INT-3-3407	F-1000	SWHR-390-1			X					/								
F3.10	F-C	INT-3-3408	F-1000	SWHR-406-3			X						/							
F3.10	F-C	INT-3-3400	F-1000	SWHR1081-1			X				X									
F3.10	F-C	INT-3-3400	F-1000	SWHR1081-3			X				X									
F3.10	F-C	INT-3-3400	F-1000	SWHR1081-6			X				X									
F3.10	F-C	INT-3-3400	F-1000	SWHR1082-1			X				X									
F3.10	F-C	INT-3-3400	F-1000	SWHR1082-3			X				X									
F3.10	F-C	INT-3-3400	F-1000	SWHR1082-6			X				X									
F3.10	F-C	INT-3-3400	F-1000	SWHR1083-1			X				X									
F3.10	F-C	INT-3-3400	F-1000	SWHR1083-3			X				X									
F3.10	F-C	INT-3-3400	F-1000	SWHR1083-6			X				X									
F3.10	F-C	INT-3-3401	F-1000	SWHR1084-1			X					/								
F3.10	F-C	INT-3-3401	F-1000	SWHR1084-3			X					/								
F3.10	F-C	INT-3-3401	F-1000	SWHR1084-6			X					/								
F3.10	F-C	INT-3-3401	F-1000	SWHR1085-1			X					/								
F3.10	F-C	INT-3-3401	F-1000	SWHR1085-3			X					/								
F3.10	F-C	INT-3-3401	F-1000	SWHR1085-6			X					/								
F3.10	F-C	INT-3-3401	F-1000	SWHR1086-1			X					/								
F3.10	F-C	INT-3-3401	F-1000	SWHR1086-3			X					/								
F3.10	F-C	INT-3-3401	F-1000	SWHR1086-6			X					/								
F3.10	F-C	INT-3-3416	F-1000	SWHR1093-1			X					/								
F3.10	F-C	INT-3-3415	F-1000	SWHR1093-2			X					/								
F3.10	F-C	INT-3-3415	F-1000	SWHR1093-3			X					/								
F3.10	F-C	INT-3-3415	F-1000	SWHR1093-4			X					/								
F3.10	F-C	INT-3-3415	F-1000	SWHR1094-1			X					/								
F3.10	F-C	INT-3-3415	F-1000	SWHR1095-1			X					/								
F3.10	F-C	INT-3-3415	F-1000	SWHR1096-2			X					/								
F3.10	F-C	INT-3-3416	F-1000	SWHR1096-3			X					/								
F3.10	F-C	INT-3-3415	F-1000	SWHR1097-2			X					/								
F3.10	F-C	INT-3-3415	F-1000	SWHR1098-2			X					/								
F3.10	F-C	INT-3-3415	F-1000	SWHR1099-1			X					/								
F3.10	F-C	INT-3-3415	F-1000	SWHR1100-1			X					/								
F3.10	F-C	INT-3-3415	F-1000	SWHR1101-1			X					/								
F3.10	F-C	INT-3-3411	F-1000	SWHR11A-22			X						/							
F3.10	F-C	INT-3-3412	F-1000	SWHR11B-25			X					/								
F3.10	F-C	INT-3-3414	F-1000	SWHR11C-27			X						/							
F3.10	F-C	INT-3-3413	F-1000	SWHR11E-25			X					/								

NSID COMPONENT SURVEILLANCE SCHEDULE

Effective Date 06/21/89 Process Date 03/09/90

COMPONENT: COMPONENT STANDARD SUPPORTS

83S	83S		INT		EXAMINATION METHODS			FIRST INTERVAL			SECOND INTERVAL			THIRD INTERVAL			FOURTH INTERVAL			
ITEM NUMBER	CATEGORY NUMBER	DESCRIPTION	SKETCH NUMBER	IDENT. NUMBER	VOL.	SUR.	VIS.	1ST PER	2ND PER	3RD PER	1ST PER	2ND PER	3RD PER	1ST PER	2ND PER	3RD PER	1ST PER	2ND PER	3RD PER	REMARKS
F3.10	F-C	INT-3-3413	F-1000	SWHR11E-31			X					/								
F3.10	F-C	INT-3-3413	F-1000	SWHR11E-40			X					/								
F3.10	F-C	INT-3-3411	F-1000	SWHR12A-33			X				X									
F3.10	F-C	INT-3-3411	F-1000	SWHR12A-39			X				X									
F3.10	F-C	INT-3-3410	F-1000	SWHR12B-12			X				X									
F3.10	F-C	INT-3-3408	F-1000	SWHR406-2A			X						/							
F3.10	F-C	INT-3-3408	F-1000	SWHR406-2B			X						/							
F3.10	F-C	INT-3-3408	F-1000	SWHR406-2C			X						/							
F3.10	F-C	INT-3-3403	F-1000	SWHR408-5A			X													INACCESSIBLE REFERENCE TABLE 4.0
F3.10	F-C	INT-3-3402	F-1000	SWHR409-12			X													INACCESSIBLE REFERENCE TABLE 4.0
F3.10	F-C	INT-3-3402	F-1000	SWHR409-15			X													INACCESSIBLE REFERENCE TABLE 4.0
F3.10	F-C	INT-3-3402	F-1000	SWHR409-18			X													INACCESSIBLE REFERENCE TABLE 4.0
F3.10	F-C	INT-3-3402	F-1000	SWHR409-19			X													INACCESSIBLE REFERENCE TABLE 4.0
F3.10	F-C	INT-3-3402	F-1000	SWHR409-20			X													INACCESSIBLE REFERENCE TABLE 4.0
F3.10	F-C	INT-2-1300	F-1000	SWIF31-1WS			X					/								
F3.10	F-C	INT-2-1300	F-1000	SWIF31-2WS			X					/								
F3.10	F-C	INT-2-1300	F-1000	SWIF31-3WS			X					/								
F3.10	F-C	INT-2-1300	F-1000	SWIF32-1WS			X						/							
F3.10	F-C	INT-2-1300	F-1000	SWIF32-2WS			X						/							
F3.10	F-C	INT-2-1300	F-1000	SWIF32-3WS			X						/							
F3.10	F-C	INT-3-3408	F-1000	SWN-H406-6			X						/							
F3.10	F-C	INT-3-3408	F-1000	SWN-H406-7			X						/							
F3.10	F-C	INT-3-3403	F-1000	SWN-H408-3			X					/								
F3.10	F-C	INT-3-3402	F-1000	SWN-H409-7			X													INACCESSIBLE REFERENCE TABLE 4.0
F3.10	F-C	INT-3-3405	F-1000	SWN-HR-525			X					/								
F3.10	F-C	INT-3-3405	F-1000	SWN-HR-526			X					/								
F3.10	F-C	INT-3-3406	F-1000	SWN-HR-527			X						/							
F3.10	F-C	INT-3-3406	F-1000	SWN-HR-528			X						/							
F3.10	F-C	INT-3-3405	F-1000	SWN-HR-529			X						/							
F3.10	F-C	INT-3-3406	F-1000	SWN-HR-530			X						/							
F3.10	F-C	INT-3-3406	F-1000	SWN-HR-533			X						/							
F3.10	F-C	INT-3-3404	F-1000	SWN-HR-549			X				X									
F3.10	F-C	INT-3-3405	F-1000	SWN-HR-558			X					/								
F3.10	F-C	INT-3-3407	F-1000	SWN-HR-562			X					/								
F3.10	F-C	INT-3-3408	F-1000	SWN-R406-1			X						/							
F3.10	F-C	INT-3-3408	F-1000	SWN-R406-4			X						/							

NSID COMPONENT SURVEILLANCE SCHEDULE

Effective Date 06/21/89 Process Date 03/09/90

COMPONENT: COMPONENT STANDARD SUPPORTS

83S	83S		INT		EXAMINATION METHODS			FIRST INTERVAL			SECOND INTERVAL			THIRD INTERVAL			FOURTH INTERVAL			
ITEM NUMBER	CATEGORY NUMBER	DESCRIPTION	SKETCH NUMBER	IDENT. NUMBER	VOL.	SUR.	VIS.	1ST PER	2ND PER	3RD PER	1ST PER	2ND PER	3RD PER	1ST PER	2ND PER	3RD PER	1ST PER	2ND PER	3RD PER	REMARKS
F3.10	F-C	INT-3-3408	F-1000	SWN-R406-5			X						/							
F3.10	F-C	INT-3-3409	F-1000	SWNH-406-9			X						/							
F3.10	F-C	INT-3-3403	F-1000	SWNH408-6A			X													INACCESSIBLE REFERENCE TABLE 4.0
F3.10	F-C	INT-3-3403	F-1000	SWNH408-6B			X													INACCESSIBLE REFERENCE TABLE 4.0
F3.10	F-C	INT-3-3402	F-1000	SWNH409-10			X													INACCESSIBLE REFERENCE TABLE 4.0
F3.10	F-C	INT-3-3402	F-1000	SWNH409-11			X													INACCESSIBLE REFERENCE TABLE 4.0
F3.10	F-C	INT-3-3402	F-1000	SWNH409-13			X													INACCESSIBLE REFERENCE TABLE 4.0
F3.10	F-C	INT-3-3409	F-1000	SWNHR406-8			X						/							
F3.10	F-C	INT-3-3404	F-1000	SWNHR407-1			X				X									
F3.10	F-C	INT-3-3404	F-1000	SWNHR407-2			X				X									
F3.10	F-C	INT-3-3404	F-1000	SWNHR407-3			X				X									
F3.10	F-C	INT-3-3404	F-1000	SWNHR407-4			X				X									
F3.10	F-C	INT-3-3406	F-1000	SWNHR408-1			X						/							
F3.10	F-C	INT-3-3403	F-1000	SWNHR408-4			X													INACCESSIBLE REFERENCE TABLE 4.0
F3.10	F-C	INT-3-3403	F-1000	SWNHR408-5			X													INACCESSIBLE REFERENCE TABLE 4.0
F3.10	F-C	INT-3-3407	F-1000	SWNR-405-2			X					/								
F3.10	F-C	INT-3-3415	F-1000	SWNR1093-5			X					/								
F3.10	F-C	INT-3-3415	F-1000	SWNR1094-2			X					/								
F3.10	F-C	INT-3-3415	F-1000	SWNR1095-2			X					/								
F3.10	F-C	INT-3-3415	F-1000	SWNR1096-1			X					/								
F3.10	F-C	INT-3-3415	F-1000	SWNR1097-1			X					/								
F3.10	F-C	INT-3-3415	F-1000	SWNR1098-1			X					/								
F3.10	F-C	INT-3-3415	F-1000	SWNR1099-2			X					/								
F3.10	F-C	INT-3-3415	F-1000	SWNR1100-2			X					/								
F3.10	F-C	INT-3-3415	F-1000	SWNR1101-2			X					/								
F3.10	F-C	INT-3-3407	F-1000	SWNR405-1B			X					/								
F3.10	F-C	INT-3-3414	F-1000	SWR-11C-26			X					/								
F3.10	F-C	INT-3-3412	F-1000	SWR-11D-28			X				X									
F3.10	F-C	INT-3-3413	F-1000	SWR-11E-30			X					/								
F3.10	F-C	INT-3-3410	F-1000	SWR-12C-15			X				X									
F3.10	F-C	INT-3-3410	F-1000	SWR-12C-16			X				X									
F3.10	F-C	INT-3-3410	F-1000	SWR-12C-17			X				X									
F3.10	F-C	INT-3-3410	F-1000	SWR12C-15A			X				X									
F3.10	F-C	INT-3-3402	F-1000	SWR409-17B			X													INACCESSIBLE REFERENCE TABLE 4.0
F3.10	F-C	INT-3-3702	F-1000	V-A-1016-1			X						/							

NSID COMPONENT SURVEILLANCE SCHEDULE

Effective Date 06/21/89 Process Date 03/09/90

COMPONENT: COMPONENT STANDARD SUPPORTS

83S	83S		INT		EXAMINATION METHODS			FIRST INTERVAL			SECOND INTERVAL			THIRD INTERVAL			FOURTH INTERVAL			
ITEM NUMBER	CATEGORY NUMBER	DESCRIPTION	SKETCH NUMBER	IDENT. NUMBER	VOL.	SUR.	VIS.	1ST PER	2ND PER	3RD PER	1ST PER	2ND PER	3RD PER	1ST PER	2ND PER	3RD PER	1ST PER	2ND PER	3RD PER	REMARKS
F3.10	F-C	INT-3-3702	F-1000	V-A-1017-2			X						/							
F3.10	F-C	INT-3-3702	F-1000	V-H-1017-1			X						/							
F3.10	F-C	INT-3-3702	F-1000	V-H-1017-3			X						/							
F3.10	F-C	INT-3-3702	F-1000	V-R-1016-2			X						/							
F3.10	F-C	INT-3-3702	F-1000	V-R-1016-3			X						/							
		TOTAL ID's for F3.10		1284 *							430	402	420							

NSID COMPONENT SURVEILLANCE SCHEDULE

Effective Date 06/21/89 Process Date 03/09/90

COMPONENT: *** CLASS TOTALS FOR IWF ***

83S	83S		INT		EXAMINATION METHODS			FIRST INTERVAL			SECOND INTERVAL			THIRD INTERVAL			FOURTH INTERVAL			
ITEM NUMBER	CATEGORY NUMBER	DESCRIPTION	SKETCH NUMBER	IDENT. NUMBER	VOL.	SUR.	VIS.	1ST PER	2ND PER	3RD PER	1ST PER	2ND PER	3RD PER	1ST PER	2ND PER	3RD PER	1ST PER	2ND PER	3RD PER	REMARKS
		CLASS TOTAL		1289 **							432	404	423							

NSID COMPONENT SURVEILLANCE SCHEDULE

Process Date 03/09/90

COMPONENT: **** GRAND TOTALS ****

83S	83S		INT		EXAMINATION METHODS			FIRST INTERVAL			SECOND INTERVAL			THIRD INTERVAL			FOURTH INTERVAL			
ITEM NUMBER	CATEGORY NUMBER	DESCRIPTION	SKETCH NUMBER	IDENT. NUMBER	VOL.	SUR.	VIS.	1ST PER	2ND PER	3RD PER	1ST PER	2ND PER	3RD PER	1ST PER	2ND PER	3RD PER	1ST PER	2ND PER	3RD PER	REMARKS
		GRAND TOTAL		4356 ***						1460	1029	1181								

NSID COMPONENT SURVEILLANCE SCHEDULE

Process Date 03/09/90

COMPONENT: This Page Intentionally Blank

83S	83S		INT		EXAMINATION METHODS			FIRST INTERVAL			SECOND INTERVAL			THIRD INTERVAL			FOURTH INTERVAL			
ITEM NUMBER	CATEGORY NUMBER	DESCRIPTION	SKETCH NUMBER	IDENT. NUMBER	VOL.	SUR.	VIS.	1ST PER	2ND PER	3RD PER	1ST PER	2ND PER	3RD PER	1ST PER	2ND PER	3RD PER	1ST PER	2ND PER	3RD PER	REMARKS
	This Page	Intentionally Blank																		

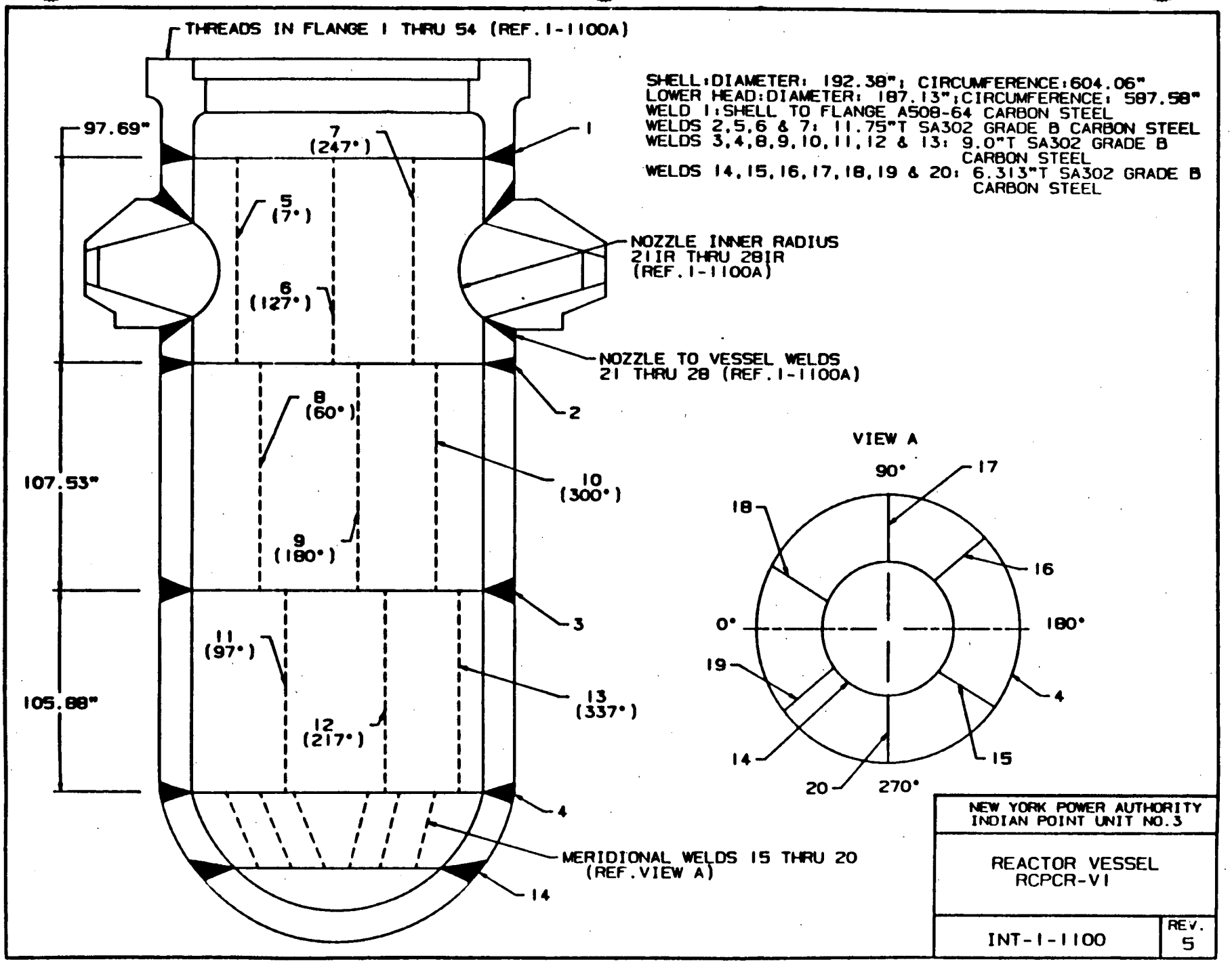
THREADS IN FLANGE 1 THRU 54 (REF.1-1100A)
SHELL:DIAMETER: 192.38"; CIRCUMFERENCE:604.06"
LOWER HEAD:DIAMETER: 187.13";CIRCUMFERENCE: 587.58"
WELD 1:SHELL TO FLANGE A508-64 CARBON STEEL
WELDS 2,5,6 & 7: 11.75"T SA302 GRADE B CARBON STEEL
WELDS 3,4,8,9,10,11,12 & 13: 9.0"T SA302 GRADE B CARBON STEEL
WELDS 14,15,16,17,18,19 & 20: 6.313"T SA302 GRADE B CARBON STEEL
97.69"
107.53"
105.88"
7 (247°)
5 (7°)
6 (127°)
8 (60°)
9 (180°)
10 (300°)
11 (97°)
12 (217°)
13 (337°)
1
2
3
4
14
NOZZLE INNER RADIUS 21IR THRU 28IR (REF.1-1100A)
NOZZLE TO VESSEL WELDS 21 THRU 28 (REF.1-1100A)
MERIDIONAL WELDS 15 THRU 20 (REF.VIEW A)
VIEW A
90°
0°
180°
270°
15
16
17
18
19
20
NEW YORK POWER AUTHORITY
INDIAN POINT UNIT NO.3
REACTOR VESSEL
RCPCR-V1
INT-1-1100
REV. 5

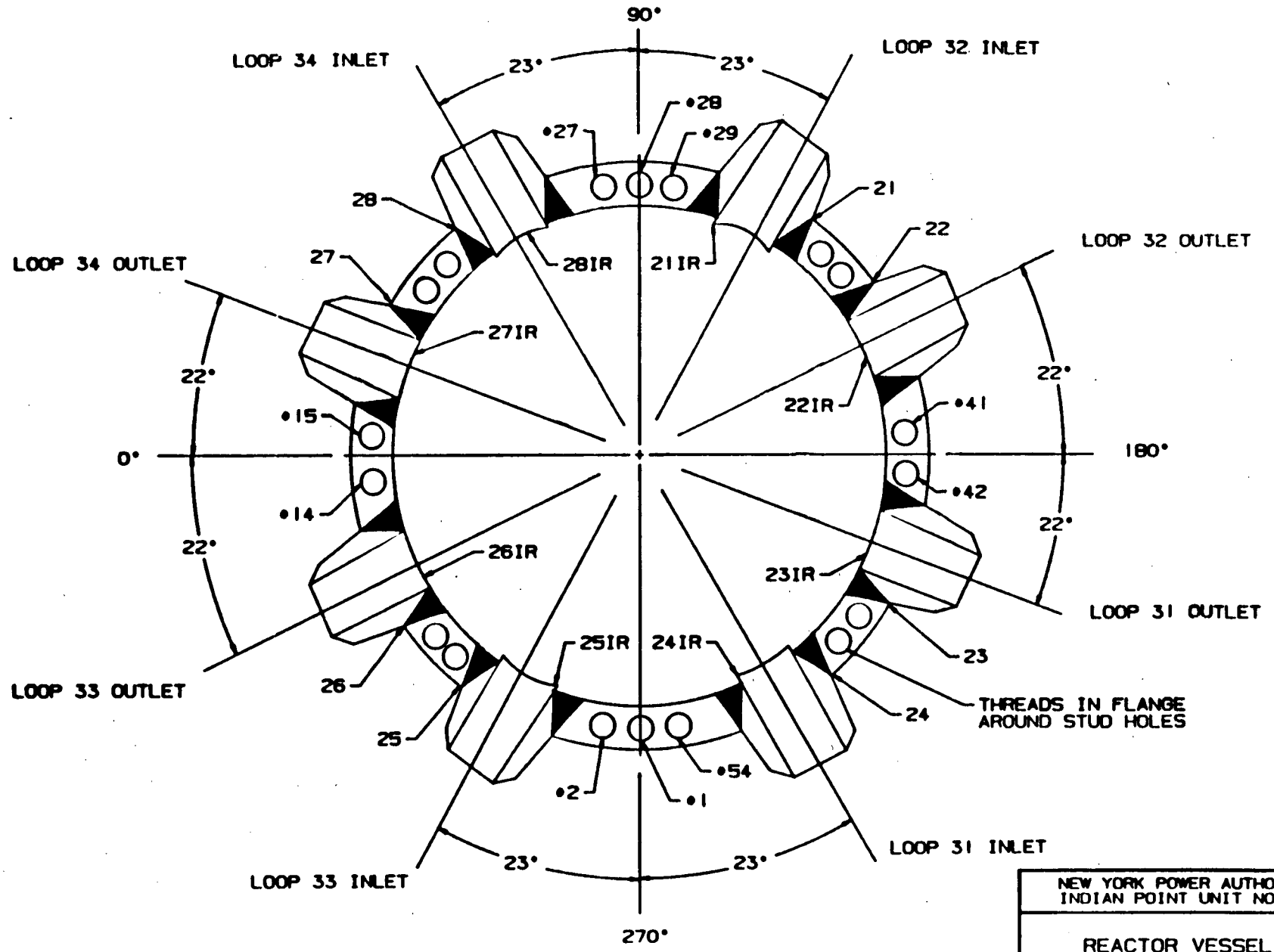

NOZZLE TO VESSEL WELDS: 21 THRU 28
NOZZLE INSIDE RADIUS SECTION: 21IR THRU 28IR
THREADS IN FLANGE: •1 THRU •54

NEW YORK POWER AUTHORITY INDIAN POINT UNIT NO.3	
REACTOR VESSEL RCPCR-V1	
INT-1-1100A	REV. 5

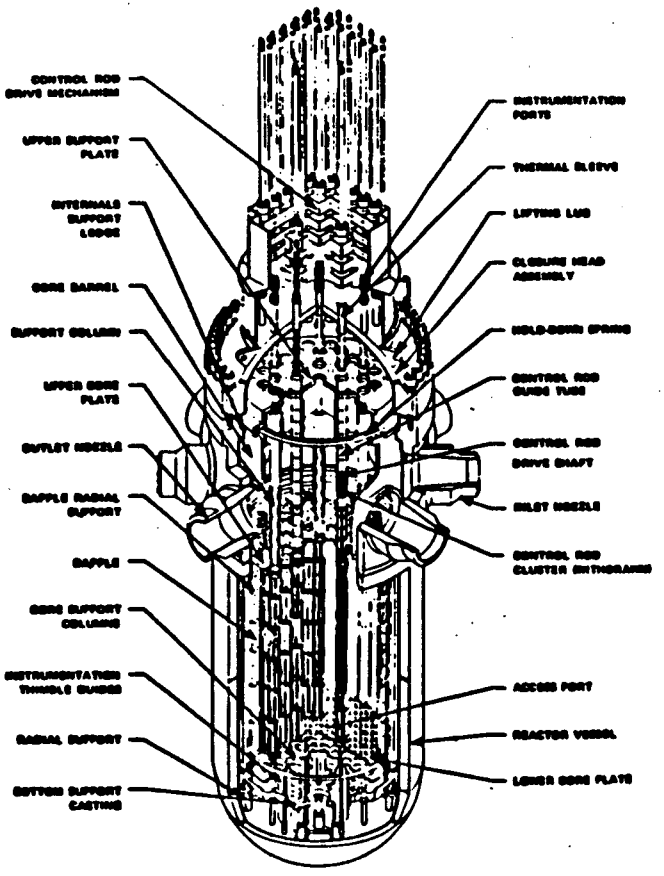

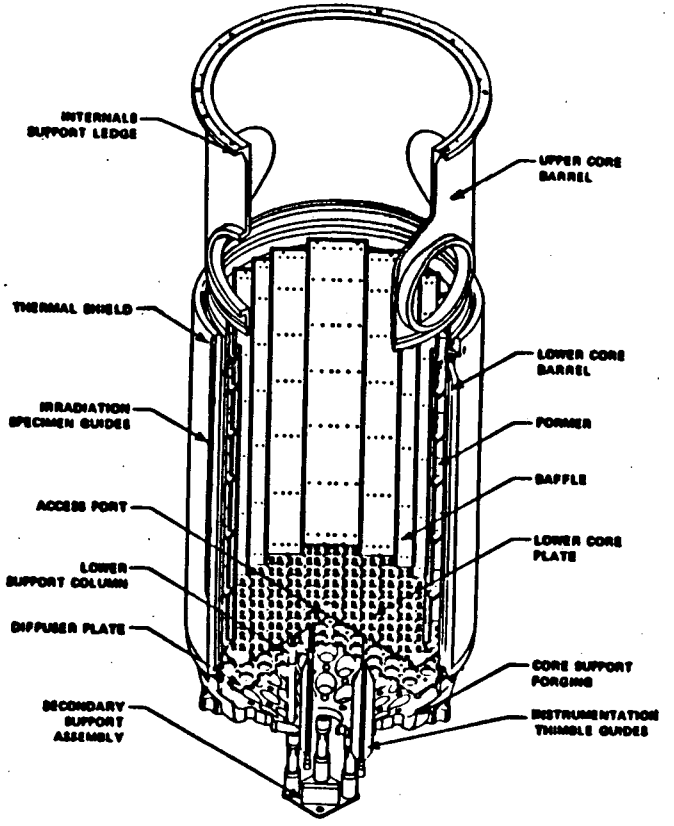

NEW YORK POWER AUTHORITY INDIAN POINT UNIT NO.3	
REACTOR VESSEL INTERNALS	
INT-1-1200	REV. 3

PRESSURIZER

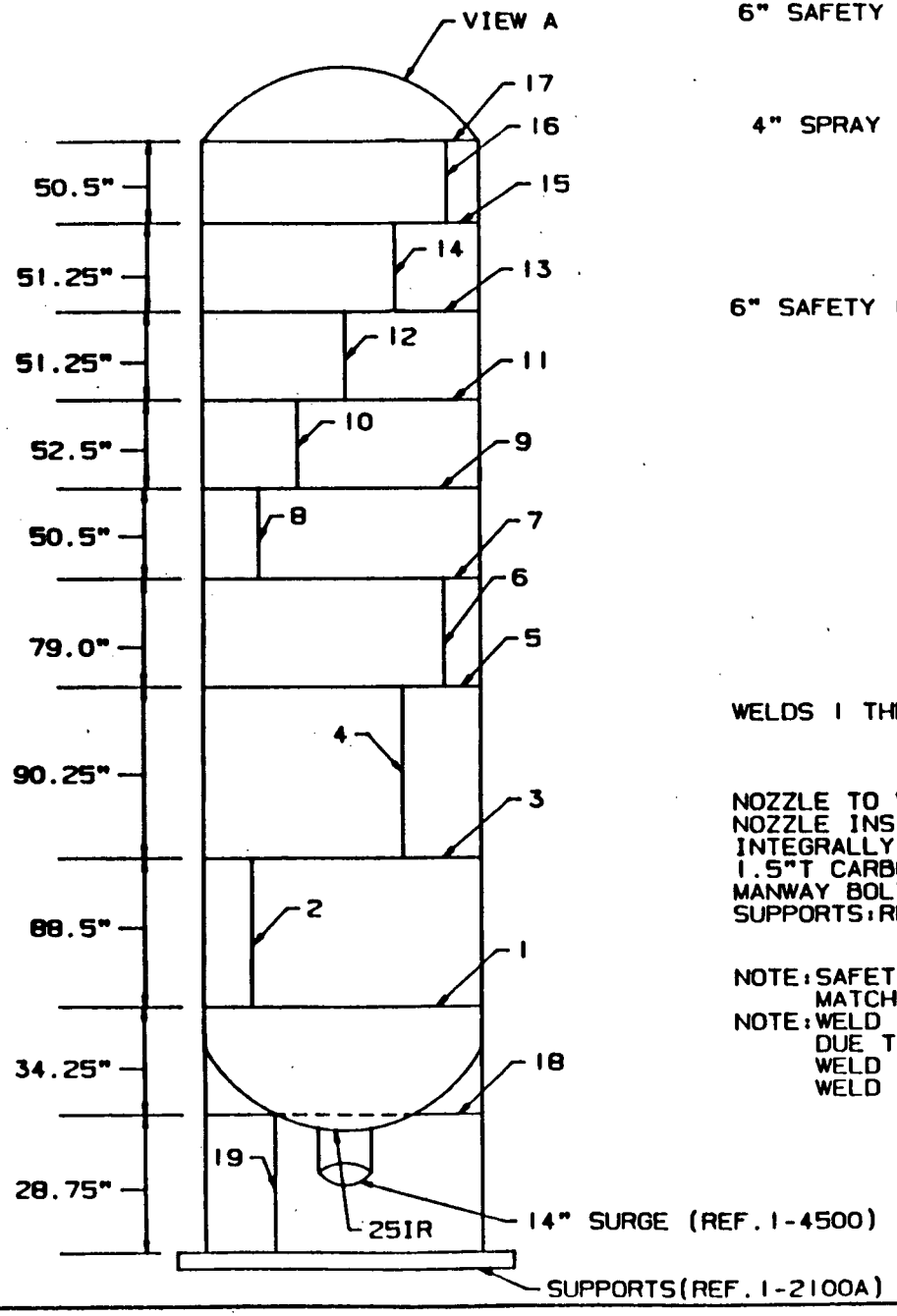

VIEW A

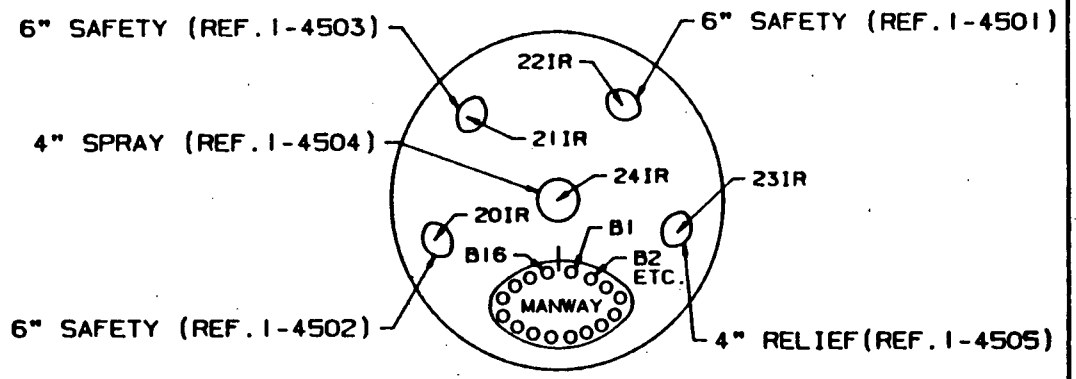

WELDS 1 THRU 17: SHELL: 4.75"T SA 302 GRADE B CARBON STEEL
UPPER & LOWER HEAD: 4.75"T SA216 GRADE WCC CARBON STEEL
DIAMETER: 92.375"; CIRCUMFERENCE: 290.05"
NOZZLE TO VESSEL WELDS: NOT APPLICABLE
NOZZLE INSIDE RADIUS SECTION: 201R THRU 251R
INTEGRALLY WELDED ATTACHMENT SUPPORT SKIRT WELDS 18 & 19: 1.5"T CARBON STEEL PLATE TO SA516 GRADE 70 CARBON STEEL
MANWAY BOLTING: 16-1.88" DIAMETER
SUPPORTS: REF. INT-I-2100A

NOTE: SAFETY NOZZLE LOCATIONS TO BE CHANGED TO MATCH CON.ED. DRAWING A210232.
NOTE: WELD 2-0" TO 15" (ADJACENT WELD 1) INACCESSIBLE DUE TO PERMANENT INSULATION. WELD 19 LOCATED 35" CCW FROM WELD 2.

NEW YORK POWER AUTHORITY INDIAN POINT UNIT NO.3	
PRESSURIZER RCPCPR1	
INT-I-2100	REV. 6

SIDE VIEW

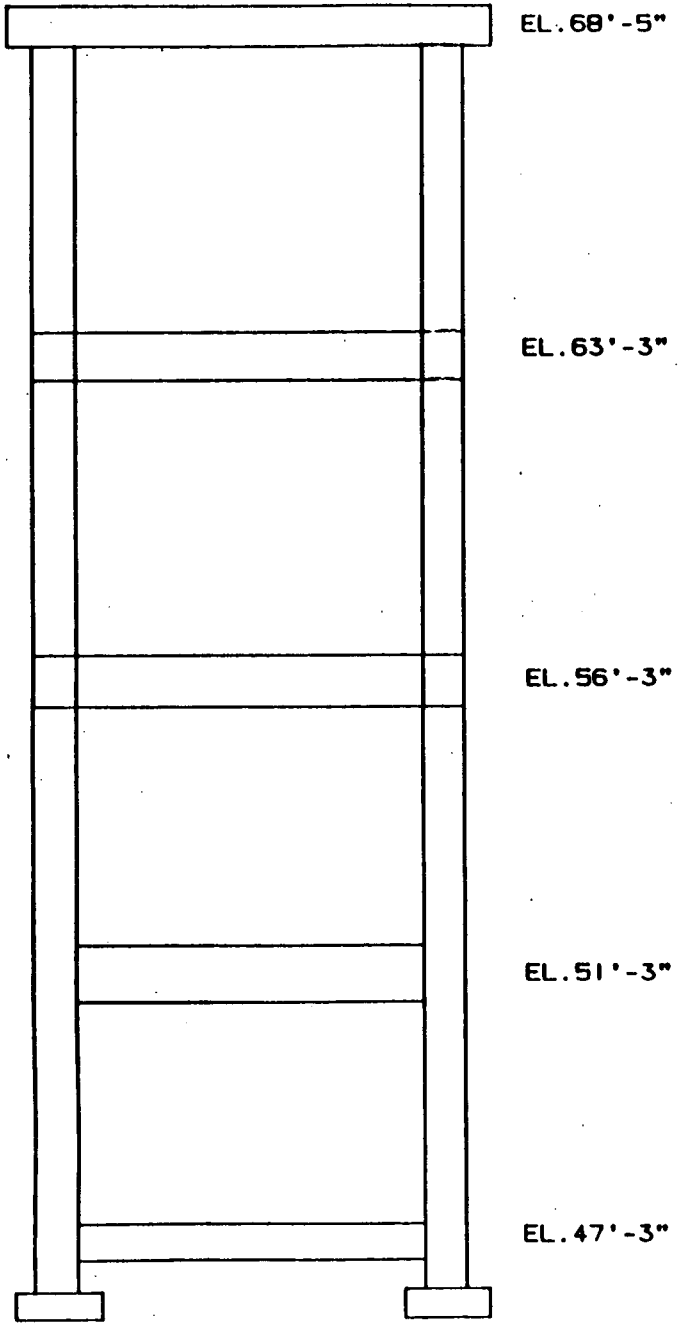

TOP VIEW

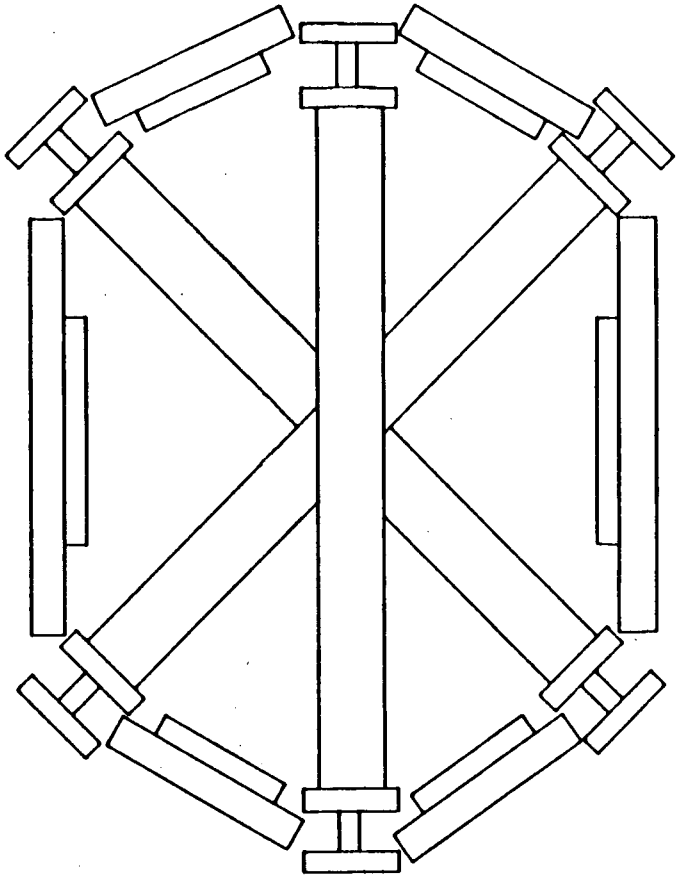

NEW YORK POWER AUTHORITY INDIAN POINT UNIT NO.3	
PRESSURIZER RCPCPRI SUPPORTS	
INT-I-2100A	REV. 0

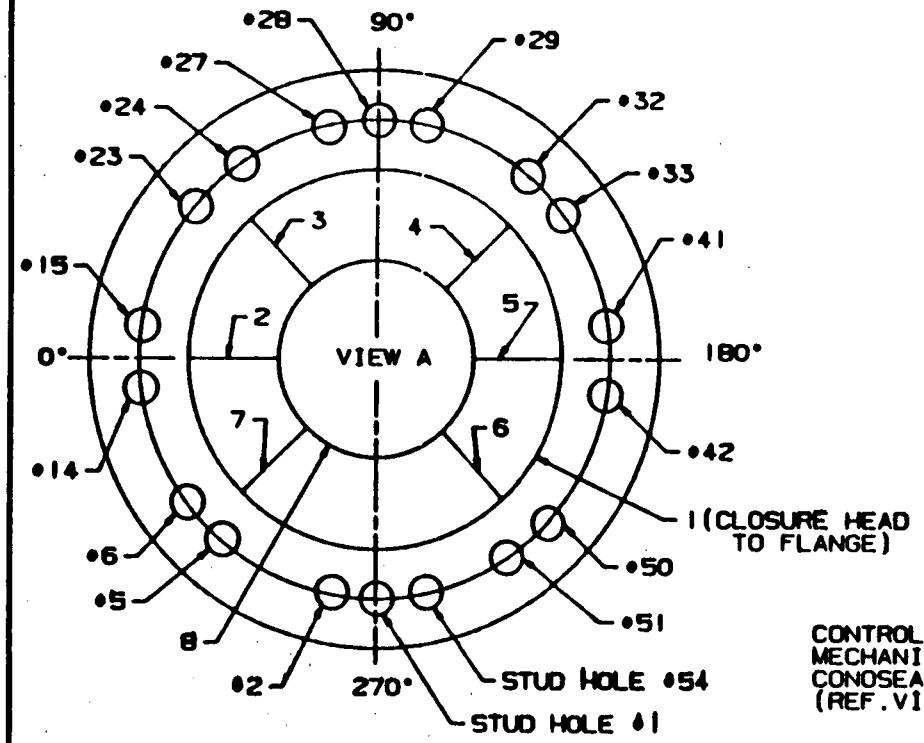

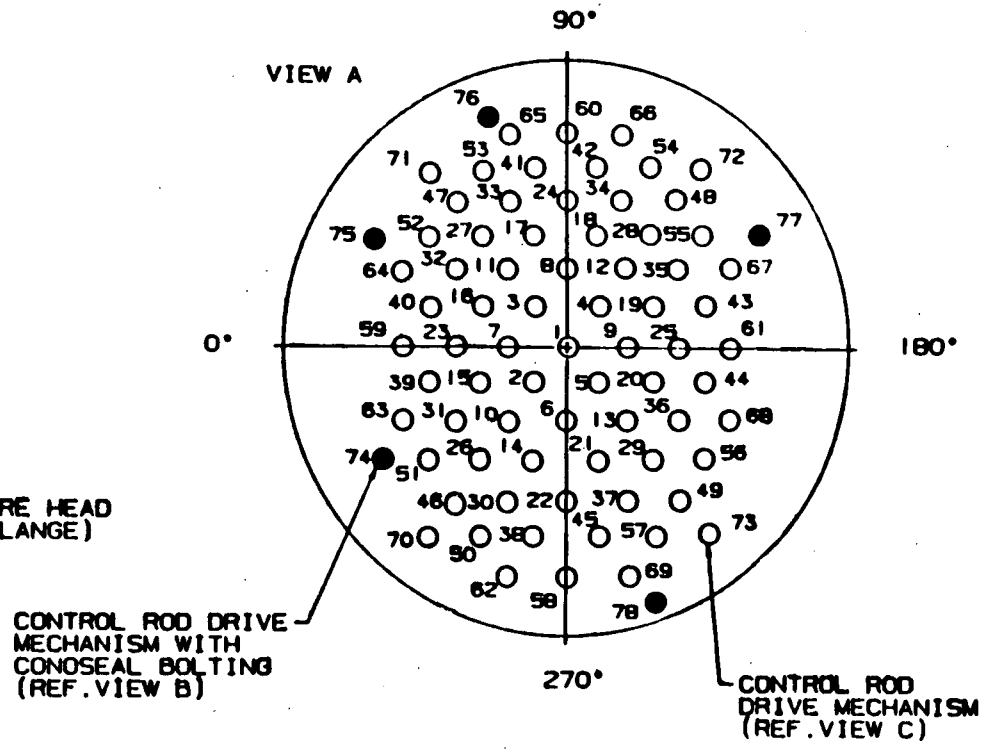

REACTOR VESSEL CLOSURE HEAD: DIAMETER 167.438"
CIRCUMFERENCE: 525.75"
CLOSURE HEAD TO FLANGE WELD 1: 8.0"T A508-64 CARBON STEEL
MERIODIONAL WELDS 2 THRU 7: 8.0"T SA302 GRADE B CARBON STEEL
CONTOL ROD DRIVE MECHANISMS 1 THRU 78: 0.625"T SB-167 INCONNEL TO 304 STAINLESS STEEL

CONOSEAL BOLTING
VIEW B

MALE FLANGE

UPPER POSITIONER

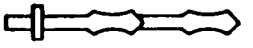

UPPER AND LOWER CLAMP (1 EACH)

CONTROL ROD DRIVE MECHANISMS
VIEW C

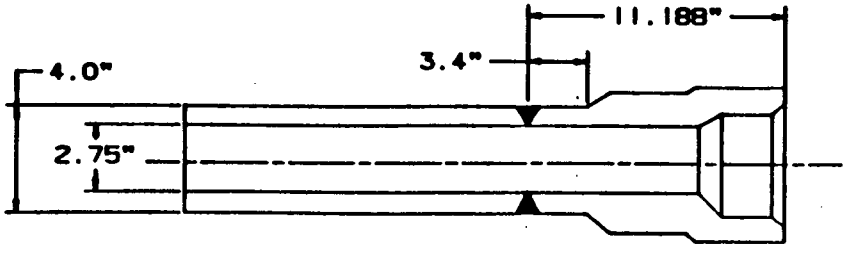

SB-167 INCONNEL

304 STAINLESS STEEL

NEW YORK POWER AUTHORITY INDIAN POINT UNIT NO. 3	
REACTOR VESSEL CLOSURE HEAD	
INT-1-1300	REV. 4

REACTOR VESSEL
STUD

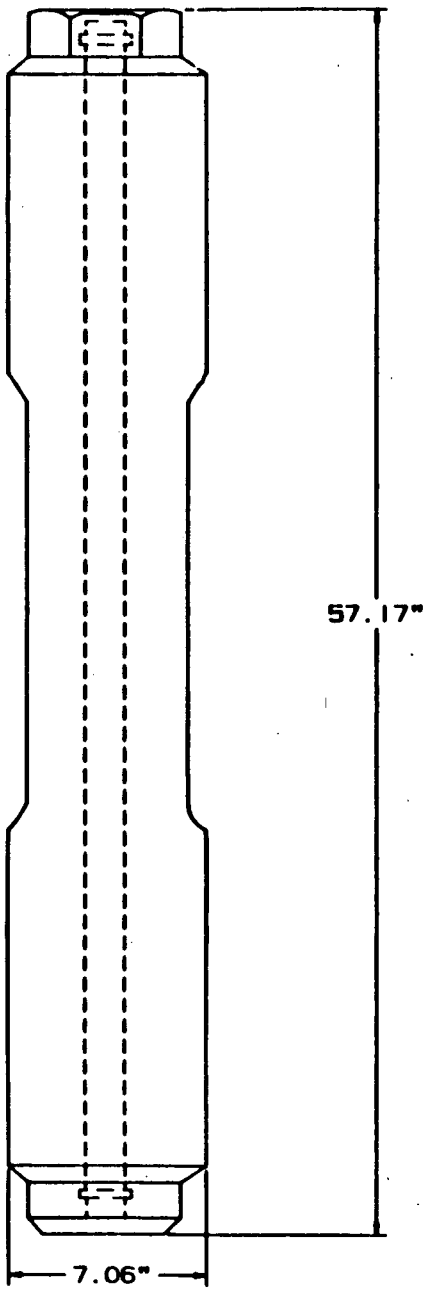

REACTOR VESSEL
NUT

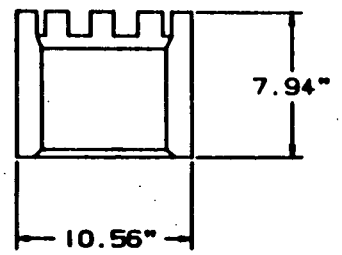

REACTOR VESSEL
CONVEX WASHER

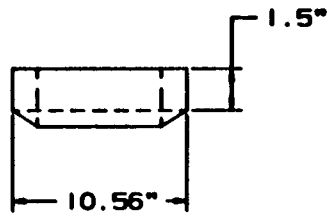

54 STUDS: SA540 GRADE B24 CARBON STEEL
54 NUTS: SA540 GRADE B24 CARBON STEEL
54 WASHERS: SA540 GRADE B24 CARBON STEEL

NEW YORK POWER AUTHORITY INDIAN POINT UNIT NO.3	
REACTOR VESSEL STUDS, NUTS & WASHERS	
INT-I-1400	REV. 3

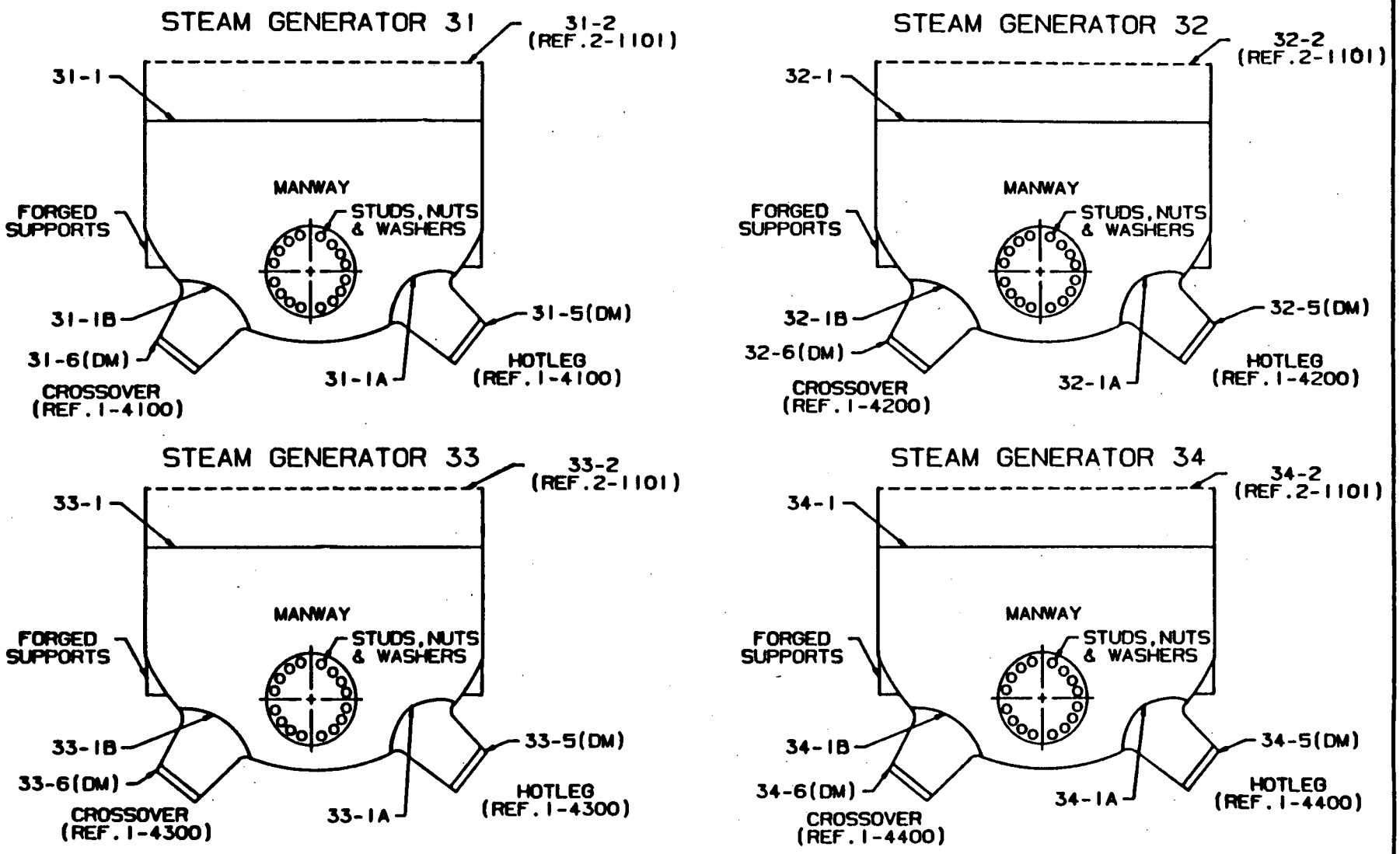

CHANNEL HEAD TO TUBESHEET WELDS 31-1,32-1,33-1 & 34-1:
5.65"T SA508 CLASS 3 CARBON STEEL:
DIAMETER: 129.25"; CIRCUMFERENCE: 405.84"
0 REFERENCE:TOP CENTERLINE OF HOTLEG MANWAY
NOZZLE TO VESSEL WELDS: NOT APPLICABLE
NOZZLE INSIDE RADIUS SECTIONS 31-1A,31-1B,32-1A,32-1B,
33-1A,33-1B,34-1A & 34-1B: SA 508 CLASS 3 CARBON STEEL
NOZZLE TO SAFE-ENDS 31-5(DM),31-6(DM),32-5(DM),32-6(DM),33-5(DM),
33-6(DM),34-5(DM) & 34-6(DM): 31" I.D.
SA508 CLASS 3 CARBON STEEL WITH TYPE 308L STAINLESS STEEL
MANWAY STUDS,NUTS & WASHERS:HOTLEG AND COLDLEG:16 STUDS(DIA.1.88"),
16 NUTS AND 32 WASHERS EACH MANWAY
INTEGRALLY WELDED ATTACHMENTS: NOT APPLICABLE

NEW YORK POWER AUTHORITY INDIAN POINT UNIT NO.3	
REPLACEMENT STEAM GENERATORS RCPCSG1-31,RCPCSG2-32, RCPCSG3-33 & RCPCSG4-34	
INT-1-3101	REV. 1

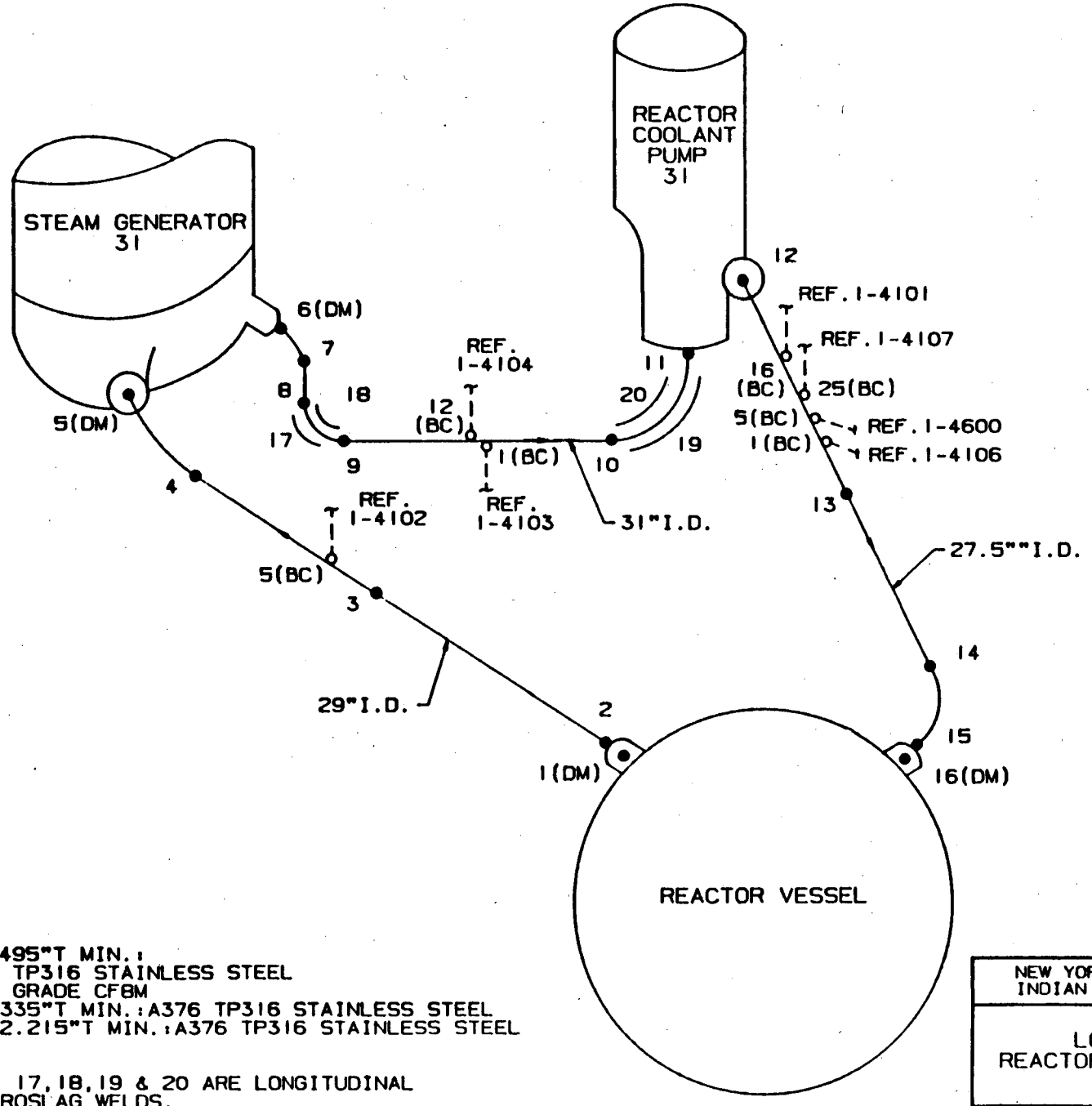

PIPING:
31" I.D. 2.495"T MIN.:
PIPING-A376 TP316 STAINLESS STEEL
ELBOWS-A351 GRADE CF8M
29" I.D. 2.335"T MIN.:A376 TP316 STAINLESS STEEL
27.5" I.D. 2.215"T MIN.:A376 TP316 STAINLESS STEEL

NOTE: WELDS 17,18,19 & 20 ARE LONGITUDINAL ELECTROSLAG WELDS.
WELDS 5(DM) AND 6(DM) REPLACED 1989.

NEW YORK POWER AUTHORITY INDIAN POINT UNIT NO.3	
LOOP 31 REACTOR COOLANT PIPE	
INT-1-4100	REV. 4

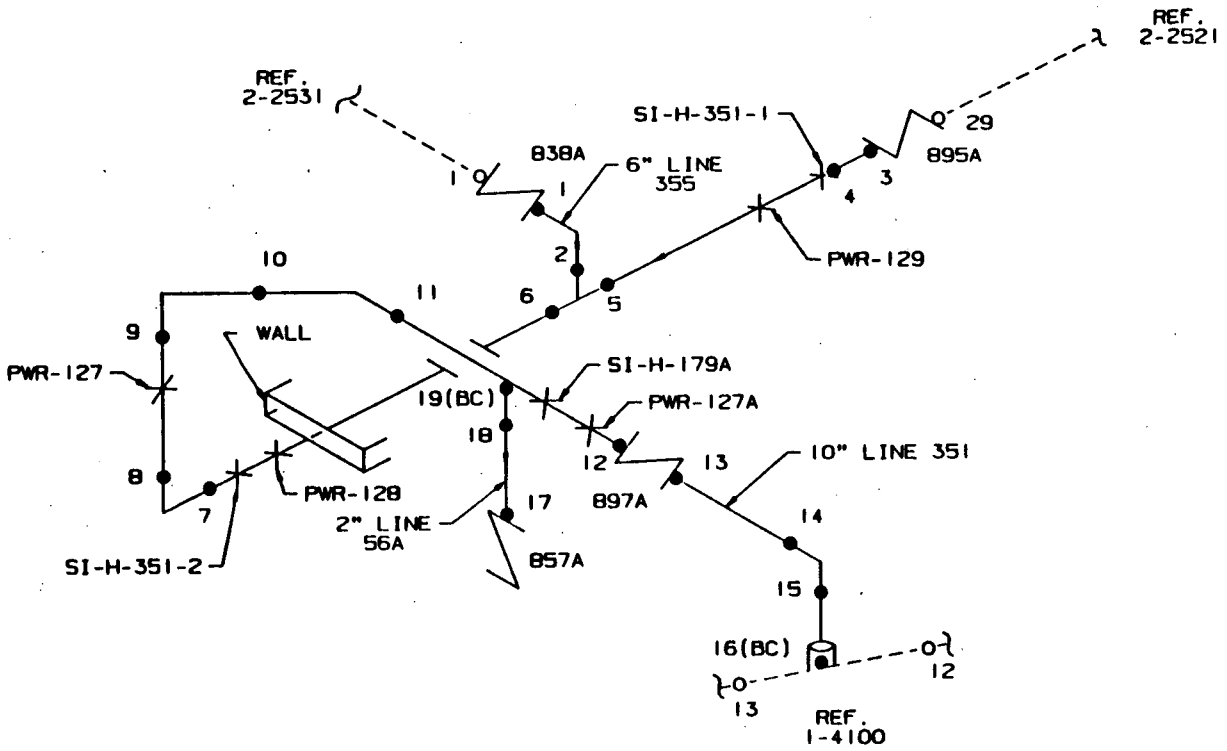

PIPING:
10" SCH 140 1.00"T STAINLESS STEEL
6" SCH 120 .562"T STAINLESS STEEL
2" SCH 160 .344"T STAINLESS STEEL

VALVE BONNET BOLTING:
897A:16 STUDS & 16 NUTS
895A:16 STUDS & 16 NUTS
838A:12 STUDS & 12 NUTS
857A:NOT APPLICABLE

VALVE MANUFACTURER:
897A:DARLING
895A:DARLING
838A:VELAN

NEW YORK POWER AUTHORITY INDIAN POINT UNIT NO.3	
10" LINE 351 ACCUMULATOR DISCHARGE,6" LINE 355 RHR & 2" LINE 56A SIS	
INT-1-4101	REV. 4

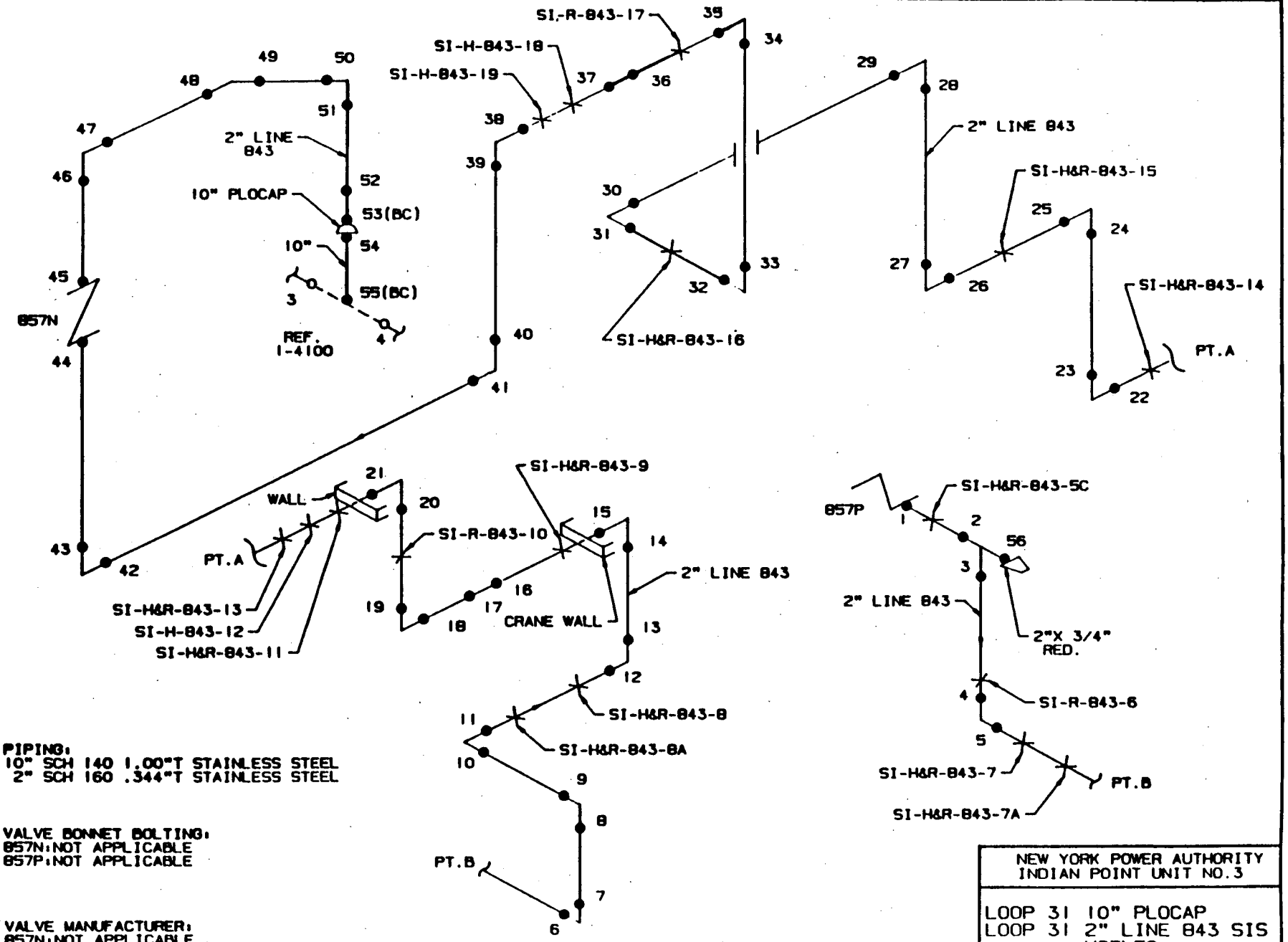

PIPING:
10" SCH 140 1.00"T STAINLESS STEEL
2" SCH 160 .344"T STAINLESS STEEL

VALVE BONNET BOLTING:
857N:NOT APPLICABLE
857P:NOT APPLICABLE

VALVE MANUFACTURER:
857N:NOT APPLICABLE
857P:NOT APPLICABLE

NEW YORK POWER AUTHORITY
INDIAN POINT UNIT NO.3

LOOP 31 10" PLOCAP
LOOP 31 2" LINE 843 SIS HOTLEG

INT-I-4102

REV. 6

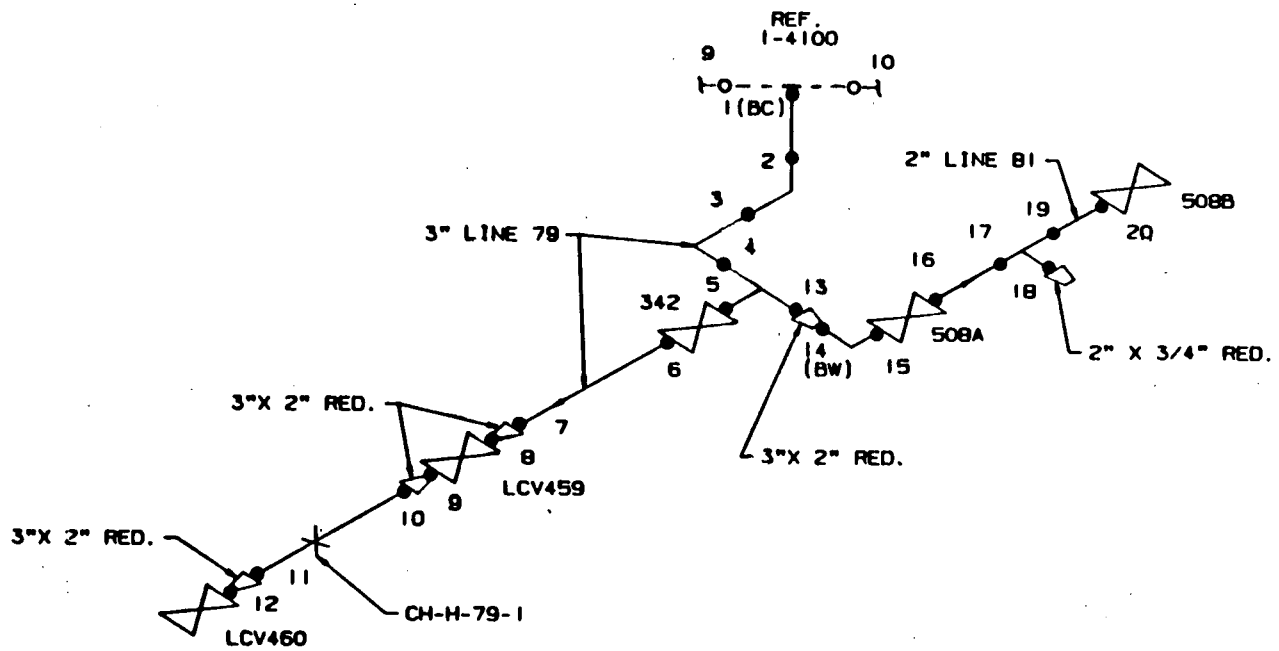

PIPING:
3.0" SCH 160 .438"T STAINLESS STEEL
2.0" SCH 160 .344"T STAINLESS STEEL

VALVE BONNET BOLTING:
342: 2 STUDS & 2 NUTS
LCV459:6 STUDS & 6 NUTS
LCV460:6 STUDS & 6 NUTS
508A:NOT APPLICABLE
508B:NOT APPLICABLE

VALVE MANUFACTURER:
342:NOT APPLICABLE
LCV459:NOT APPLICABLE
LCV460:NOT APPLICABLE
508A:NOT APPLICABLE
508B:NOT APPLICABLE

NEW YORK POWER AUTHORITY INDIAN POINT UNIT NO.3	
LOOP 31 3"& 2" LINE 79 LETDOWN & 2" LINE 81 DRAIN	
INT-1-4103	REV. 3

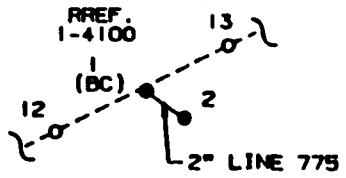

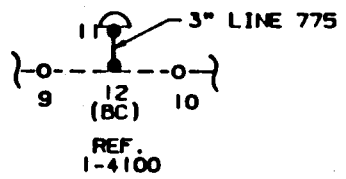

PIPING:
3.0" SCH 160 .438"T STAINLESS STEEL
2.0" SCH 160 .344"T STAINLESS STEEL

NOTE: INT-1-4104 3" LINE 775 DELETED AND CAPPED 1989.WELD 11 INSTALLED 1989.
INT-1-4105 2" LINE 776 DELETED 1989.
INT-1-4106 2" LINE 775 DELETED AND BOSSED 1989.WELD 2 INSTALLED 1989.

NEW YORK POWER AUTHORITY INDIAN POINT UNIT NO.3	
INT-1-4104 LOOP 31 3" LINE 775 RTD INT-1-4106 LOOP 31 2" LINE 775 RTD	
INT-1-4104 & INT-1-4106	REV. 6

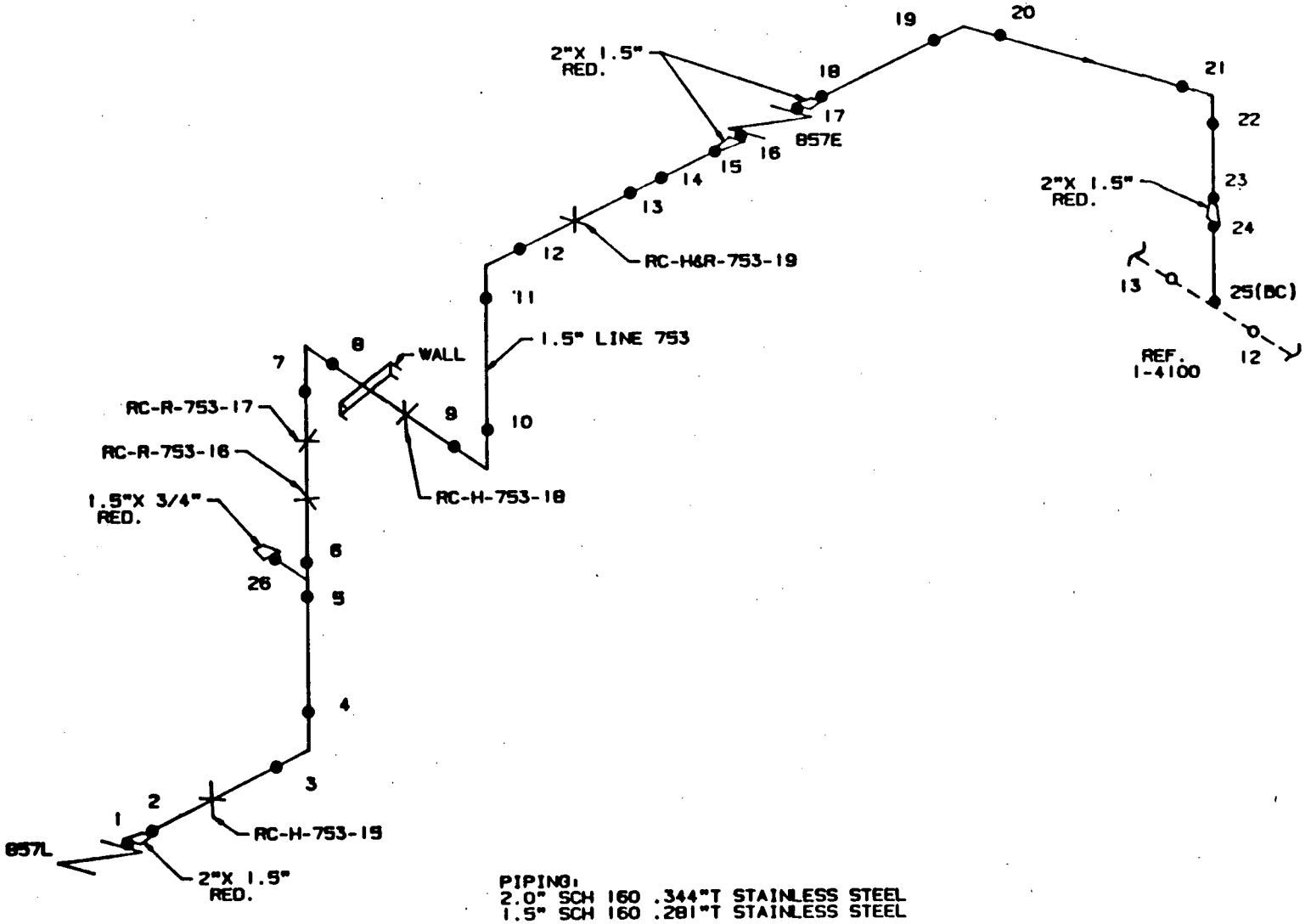

PIPING:
2.0" SCH 160 .344"T STAINLESS STEEL
1.5" SCH 160 .281"T STAINLESS STEEL

VALVE BONNET BOLTING:
857E: NOT APPLICABLE
857L: NOT APPLICABLE

VALVE MANUFACTURER:
857E: NOT APPLICABLE
857L: NOT APPLICABLE

NEW YORK POWER AUTHORITY INDIAN POINT UNIT NO.3	
LOOP 31 2" & 1.5" LINE 753 SIS COLDLEG	
INT-I-4107	REV. 4

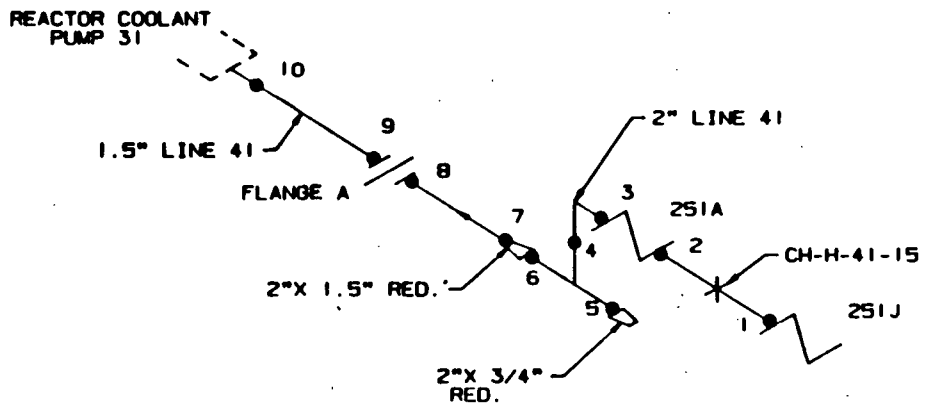

PIPING:
2.0" SCH 160 .344"T STAINLESS STEEL
1.5" SCH 160 .281"T STAINLESS STEEL

VALVE BONNET BOLTING:
251A:NOT APPLIACBLE
251J:NOT APPLIACBLE

VALVE MANUFACTURER:
251A:NOT APPLICABLE
251J:NOT APPLICABLE

FLANGE BOLTING:
FLANGE A:4 STUDS & 8 NUTS

NEW YORK POWER AUTHORITY INDIAN POINT UNIT NO.3	
LOOP 31 2" & 1.5" LINE 41 SEAL INJECTION	
INT-I-4108	REV. 4

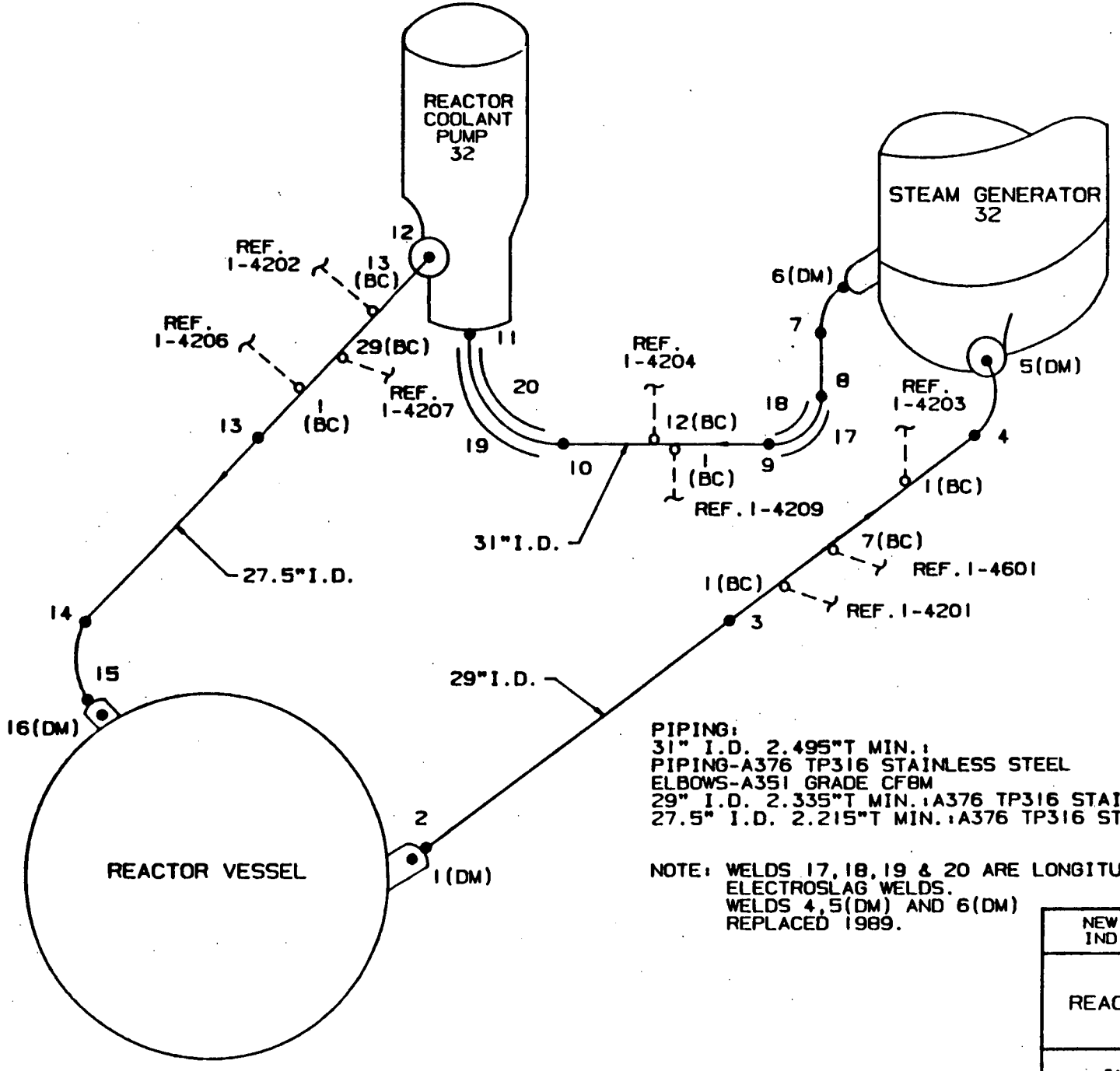

PIPING:
31" I.D. 2.495"T MIN.:
PIPING-A376 TP316 STAINLESS STEEL
ELBOWS-A351 GRADE CF8M
29" I.D. 2.335"T MIN.:A376 TP316 STAINLESS STEEL
27.5" I.D. 2.215"T MIN.:A376 TP316 STAINLESS STEEL

NOTE: WELDS 17,18,19 & 20 ARE LONGITUDINAL ELECTROSLAG WELDS.
WELDS 4,5(DM) AND 6(DM) REPLACED 1989.

NEW YORK POWER AUTHORITY INDIAN POINT UNIT NO.3	
LOOP 32 REACTOR COOLANT PIPE	
INT-1-4200	REV. 4

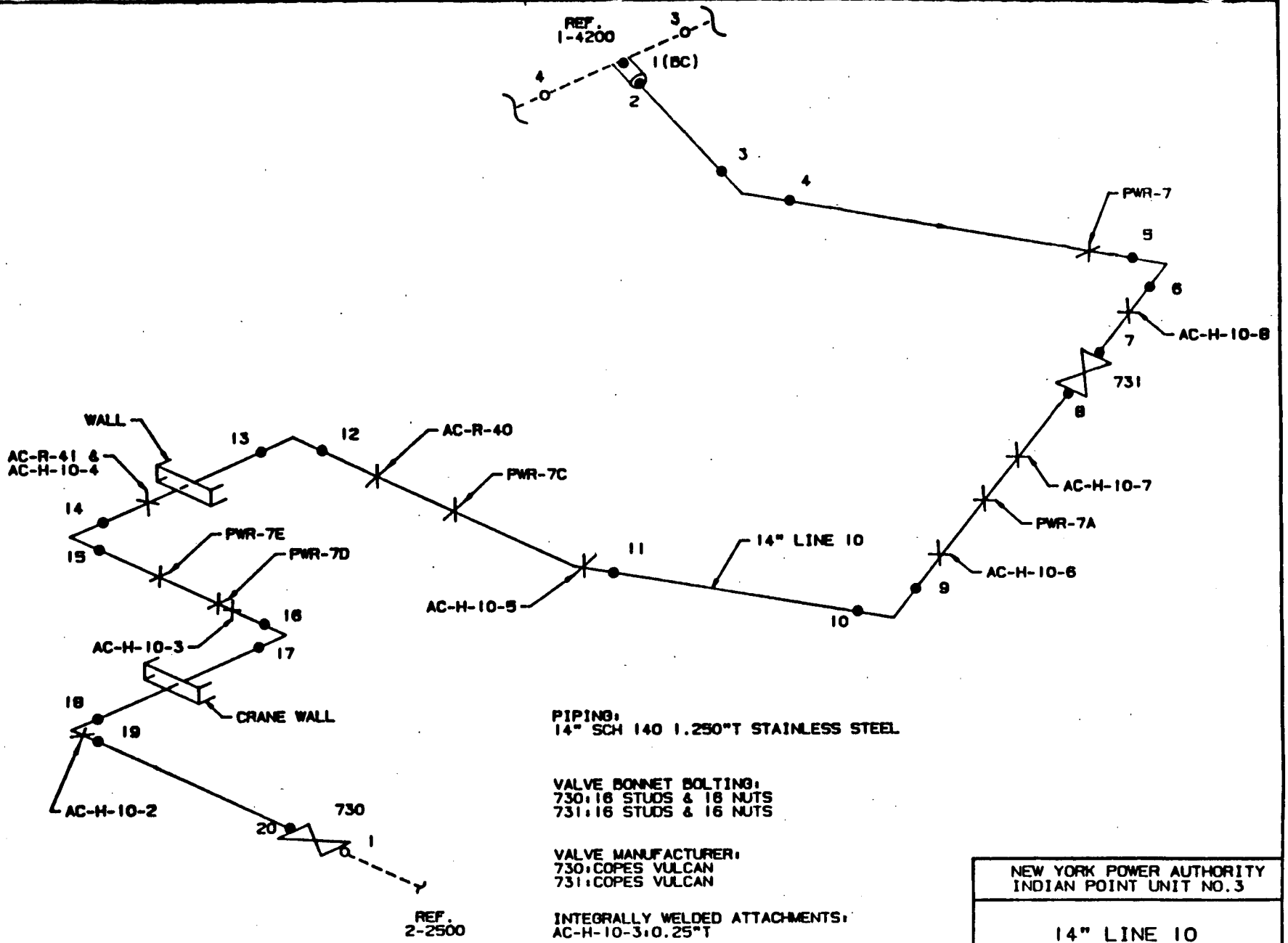

PIPING:
14" SCH 140 1.250"T STAINLESS STEEL

VALVE BONNET BOLTING:
730:16 STUDS & 16 NUTS
731:16 STUDS & 16 NUTS

VALVE MANUFACTURER:
730:COPES VULCAN
731:COPES VULCAN

INTEGRALLY WELDED ATTACHMENTS:
AC-H-10-3:0.25"T

NEW YORK POWER AUTHORITY INDIAN POINT UNIT NO.3	
14" LINE 10 RHR HOTLEG TAKE-OFF	
INT-1-4201	REV. 4

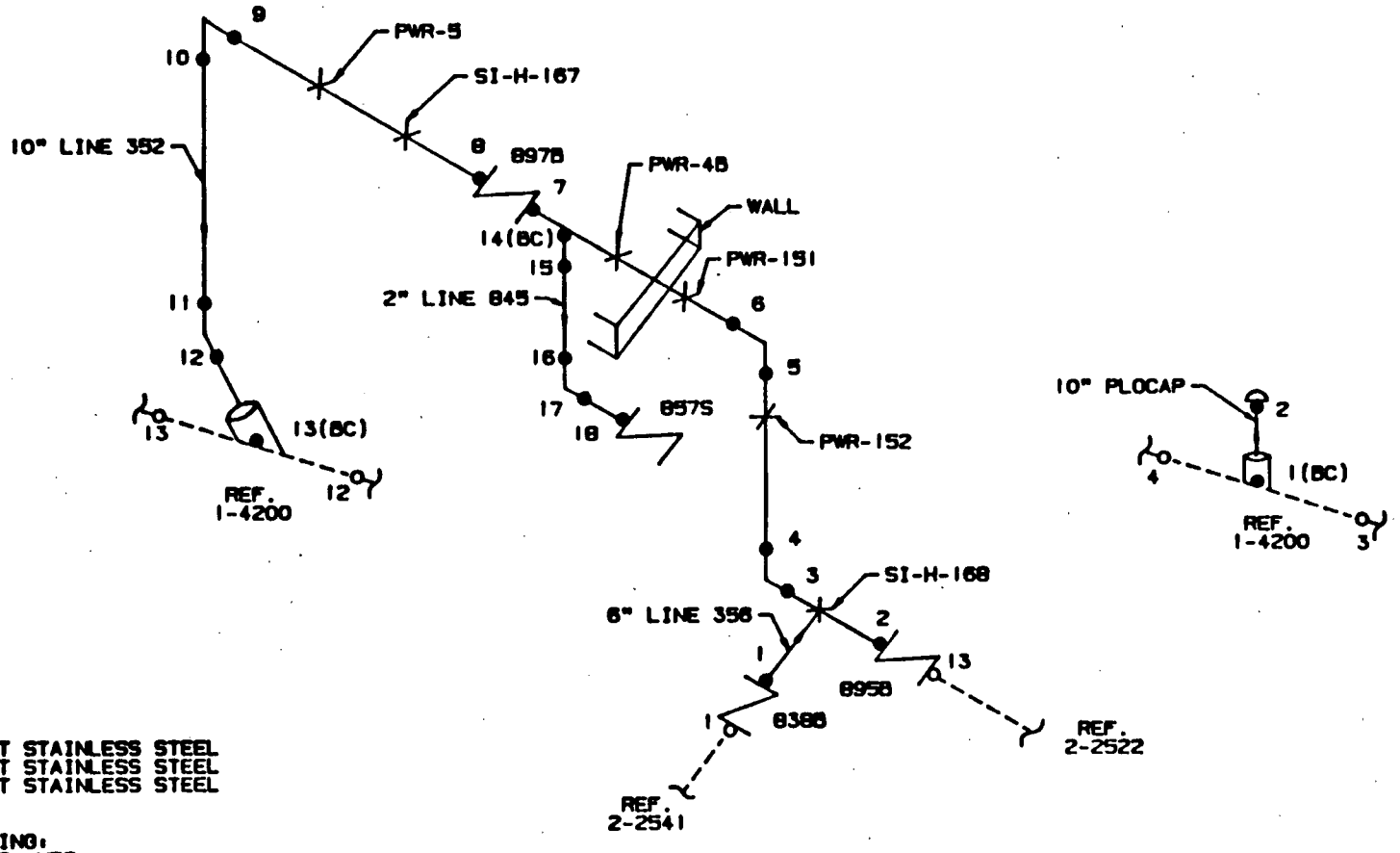

PIPING:
10" SCH 140 1.00"T STAINLESS STEEL
6" SCH 120 .562"T STAINLESS STEEL
2" SCH 160 .344"T STAINLESS STEEL

VALVE BONNET BOLTING:
897B:16 STUDS & 16 NUTS
895B:16 STUDS & 16 NUTS
838B:12 STUDS & 12 NUTS
857S:NOT APPLICABLE

VALVE MANUFACTURER:
897B:DARLING
895B:DARLING
838B:VELAN

INTEGRALLY WELDED ATTACHMENTS:
PWR-4B:0.75"T
SI-H-168:0.216"T

NEW YORK POWER AUTHORITY INDIAN POINT UNIT NO.3	
INT-I-4202 10" LINE 352 ACCUMULATOR DISCHARGE,6" LINE 352 RHR & 2" LINE 845 SIS INT-I-4203 10" PLOCAP	
INT-I-4202 & INT-I-4203	REV. 4

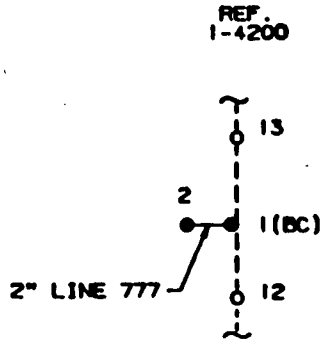

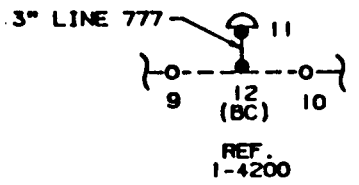

PIPING:
3.0" SCH 160 .438"T STAINLESS STEEL
2.0" SCH 160 .344"T STAINLESS STEEL

NOTE: INT-1-4204 3" LINE 777 DELETED AND CAPPED 1989.WELD 11 INSTALLED 1989.
INT-1-4205 2" LINE 778 DELETED 1989.
INT-1-4206 2" LINE 777 DELETED AND BOSSED 1989.WELD 2 INSTALLED 1989.

NEW YORK POWER AUTHORITY INDIAN POINT UNIT NO.3	
INT-1-4204 LOOP 32 3" LINE 777 RTD INT-1-4206 LOOP 32 2" LINE 777 RTD	
INT-1-4204 & INT-1-4206	REV. 5

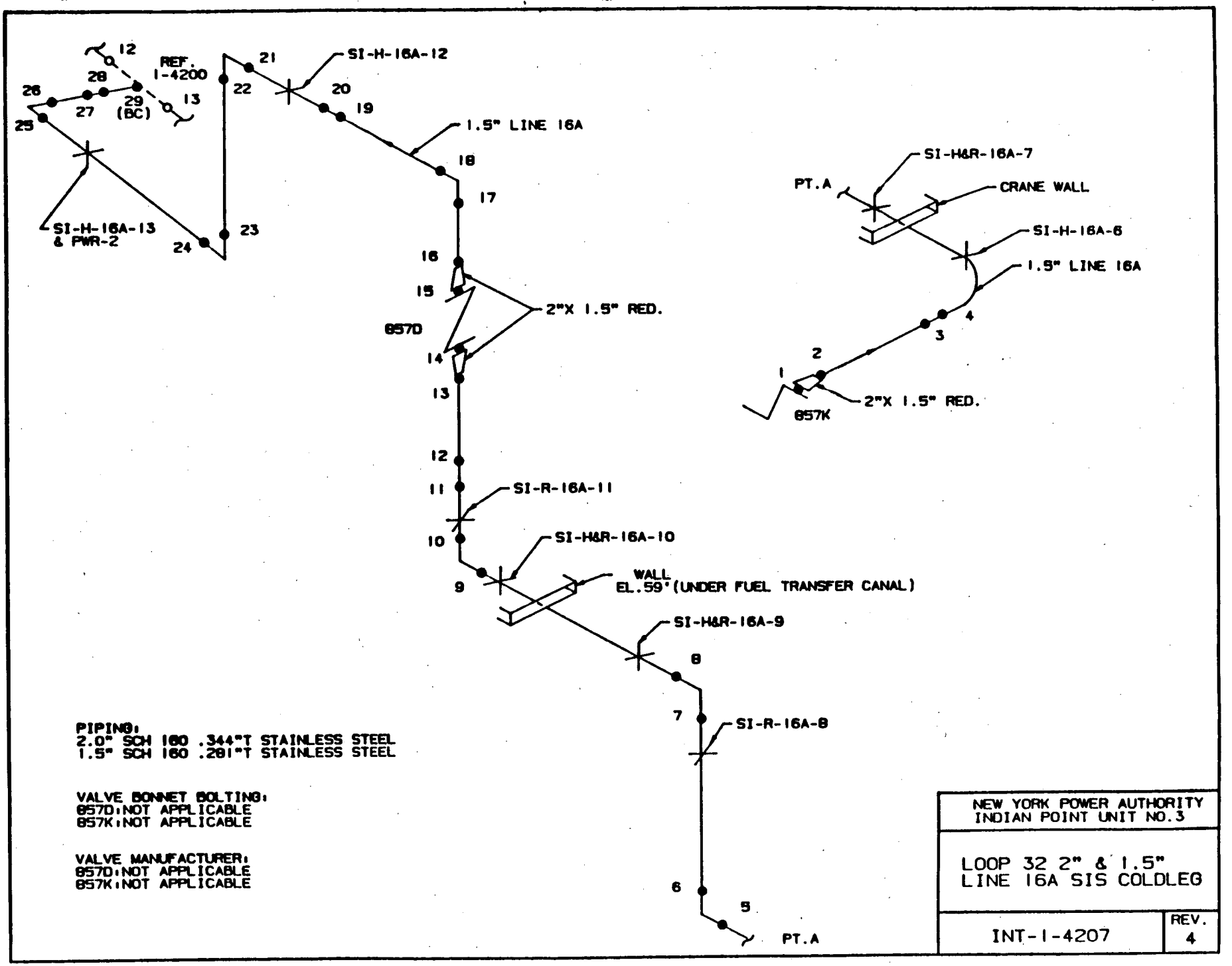

PIPING:
2.0" SCH 160 .344"T STAINLESS STEEL
1.5" SCH 160 .281"T STAINLESS STEEL

VALVE BONNET BOLTING:
857D:NOT APPLICABLE
857K:NOT APPLICABLE

VALVE MANUFACTURER:
857D:NOT APPLICABLE
857K:NOT APPLICABLE

NEW YORK POWER AUTHORITY
INDIAN POINT UNIT NO.3

LOOP 32 2" & 1.5"
LINE 16A SIS COLDLEG

INT-I-4207

REV. 4

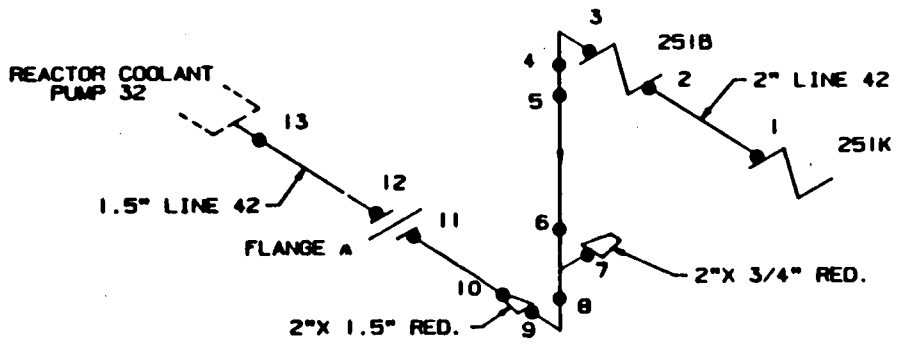

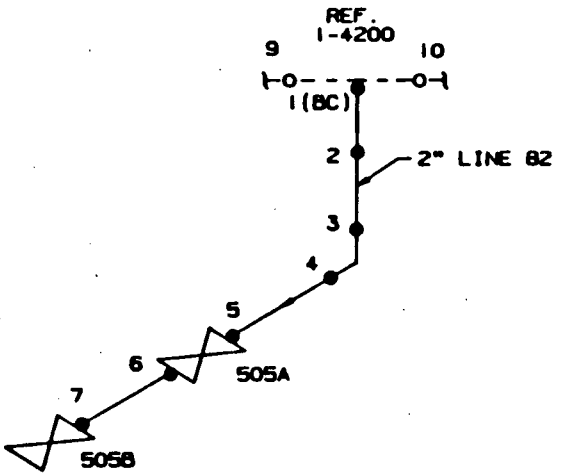

PIPING:
2.0" SCH 160 .344"T STAINLESS STEEL
1.5" SCH 160 .281"T STAINLESS STEEL

VALVE BONNET BOLTING:
251B:NOT APPLIACBLE
251K:NOT APPLIACBLE
505A:NOT APPLICABLE
505B:NOT APPLICABLE

VALVE MANUFACTURER:
251B:NOT APPLICABLE
251K:NOT APPLICABLE
505A:NOT APPLICABLE
505B:NOT APPLICABLE

FLANGE BOLTING:
FLANGE A:4 STUDS & 8 NUTS

NEW YORK POWER AUTHORITY INDIAN POINT UNIT NO.3	
INT-1-4208 LOOP 32 2" & 1.5" LINE 42 SEAL INJECTION INT-1-4209 LOOP 32 2" LINE 82 DRAIN	
INT-1-4208 & INT-1-4209	REV. 3

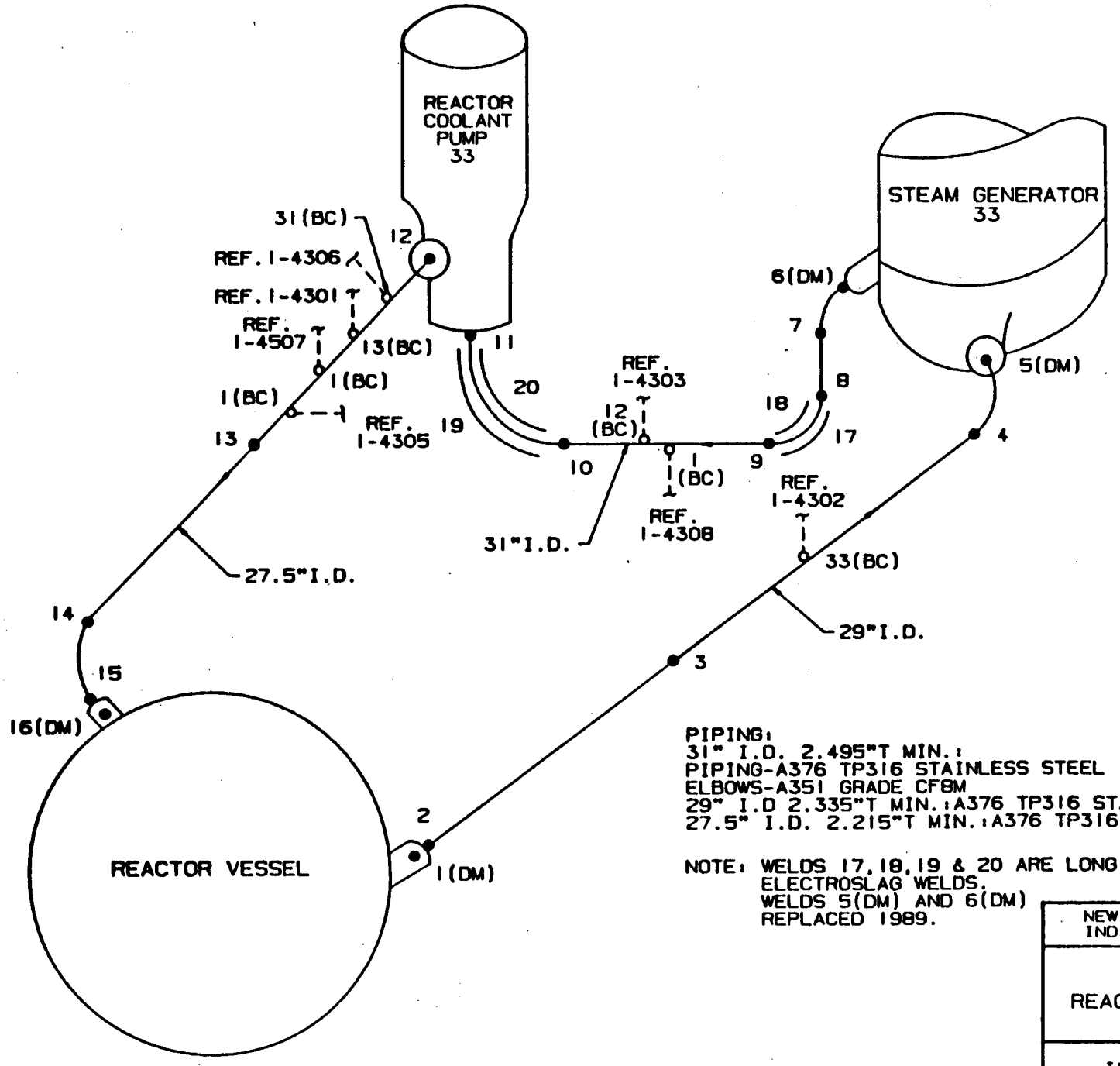

PIPING:
31" I.D. 2.495"T MIN.:
PIPING-A376 TP316 STAINLESS STEEL
ELBOWS-A351 GRADE CF8M
29" I.D 2.335"T MIN.:A376 TP316 STAINLESS STEEL
27.5" I.D. 2.215"T MIN.:A376 TP316 STAINLESS STEEL

NOTE: WELDS 17,18,19 & 20 ARE LONGITUDINAL ELECTROSLAG WELDS.
WELDS 5(DM) AND 6(DM) REPLACED 1989.

NEW YORK POWER AUTHORITY INDIAN POINT UNIT NO.3	
LOOP 33 REACTOR COOLANT PIPE	
INT-1-4300	REV. 4

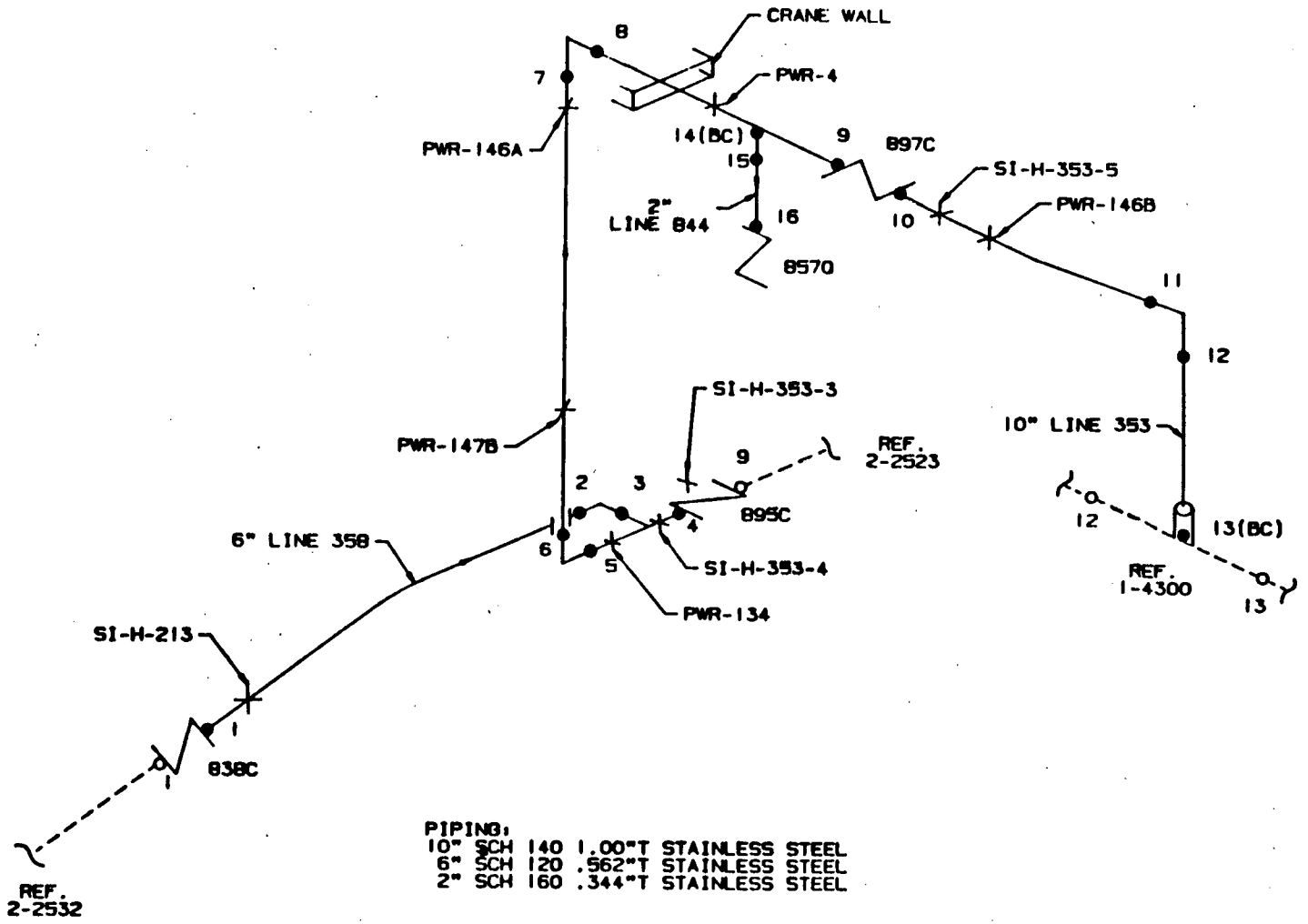

PIPING:
10" SCH 140 1.00"T STAINLESS STEEL
6" SCH 120 .562"T STAINLESS STEEL
2" SCH 160 .344"T STAINLESS STEEL

VALVE BONNET BOLTING:
897C:16 STUDS & 16 NUTS
895C:16 STUDS & 16 NUTS
838C:12 STUDS & 12 NUTS
857Q:NOT APPLICABLE

VALVE MANUFACTURER:
897C:DARLING
895C:DARLING
838C:VELAN

INTEGRALLY WELDED ATTACHMENTS:
PWR-4:
PWR-146A:

NEW YORK POWER AUTHORITY INDIAN POINT UNIT NO.3	
10" LINE 353 ACCUMULATOR DISCHARGE,6" LINE 358 RHR & 2" LINE 844 SIS	
INT-1-4301	REV. 4

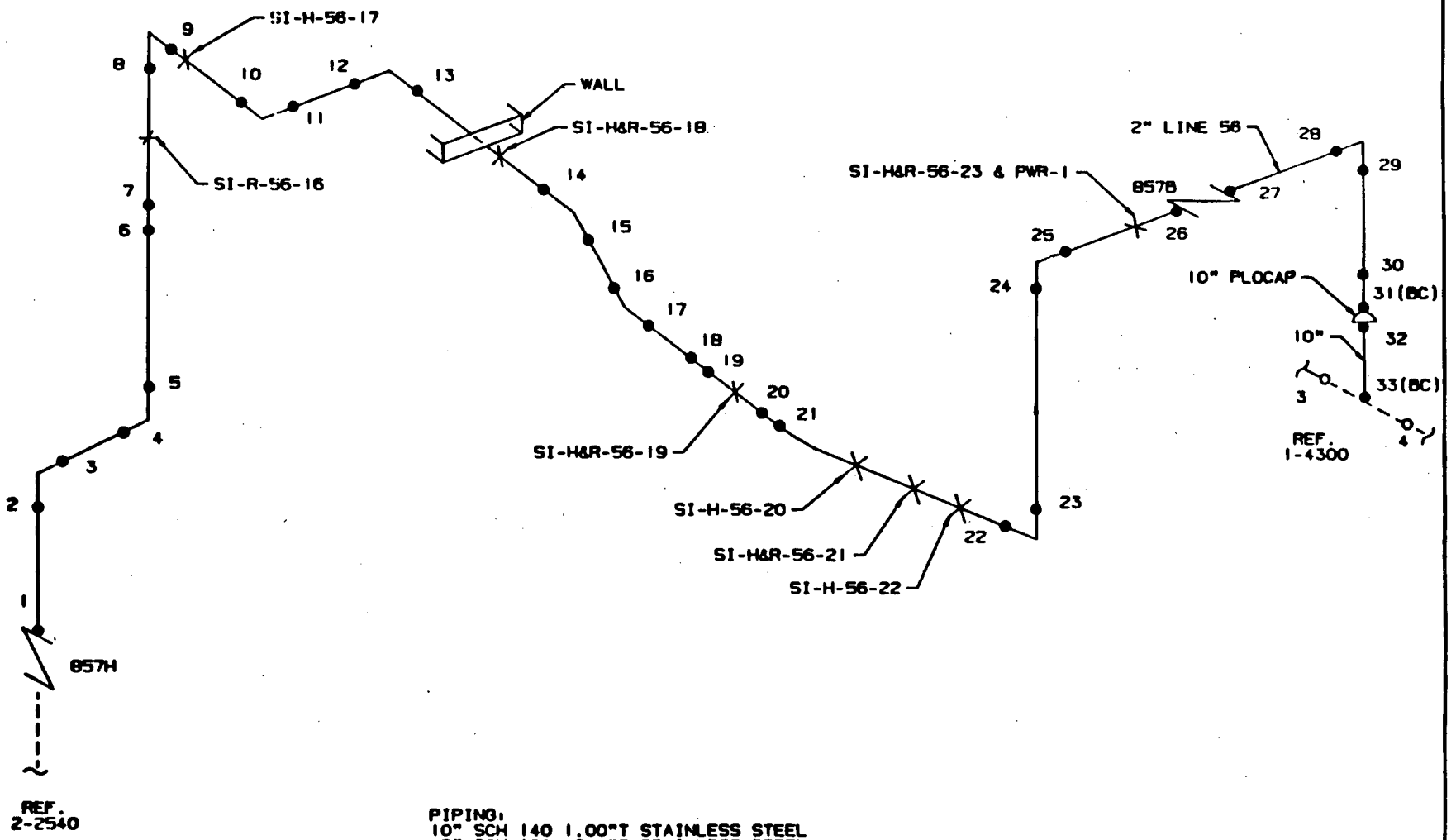

PIPING:
10" SCH 140 1.00"T STAINLESS STEEL
2" SCH 160 .344"T STAINLESS STEEL

VALVE BONNET BOLTING:
857B:NOT APPLICABLE
857H:NOT APPLICABLE

VALVE MANUFACTURER:
857B:NOT APPLICABLE
857H:NOT APPLICABLE

INTEGRALLY WELDED ATTACHMENTS:
PWR-1:

NEW YORK POWER AUTHORITY INDIAN POINT UNIT NO.3	
LOOP 33 10" PLOCAP LOOP 33 2" LINE 56 SIS HOTLEG	
INT-1-4302	REV. 4

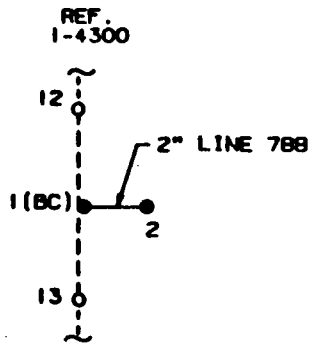

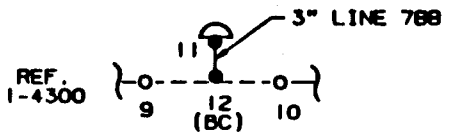

PIPING:
3.0" SCH 160 .438"T STAINLESS STEEL
2.0" SCH 160 .344"T STAINLESS STEEL

NOTE: INT-1-4303 3" LINE 788 DELETED AND CAPPED 1989.WELD 11 INSTALLED 1989.
INT-1-4304 2" LINE 789 DELETED 1989.
INT-1-4305 2" LINE 788 DELETED AND BOSSED 1989.WELD 2 INSTALLED 1989.

NEW YORK POWER AUTHORITY INDIAN POINT UNIT NO.3	
INT-1-4303 LOOP 33 3" LINE 788 RTD INT-1-4305 LOOP 33 2" LINE 788 RTD	
INT-1-4303 & INT-1-4305	REV. 6

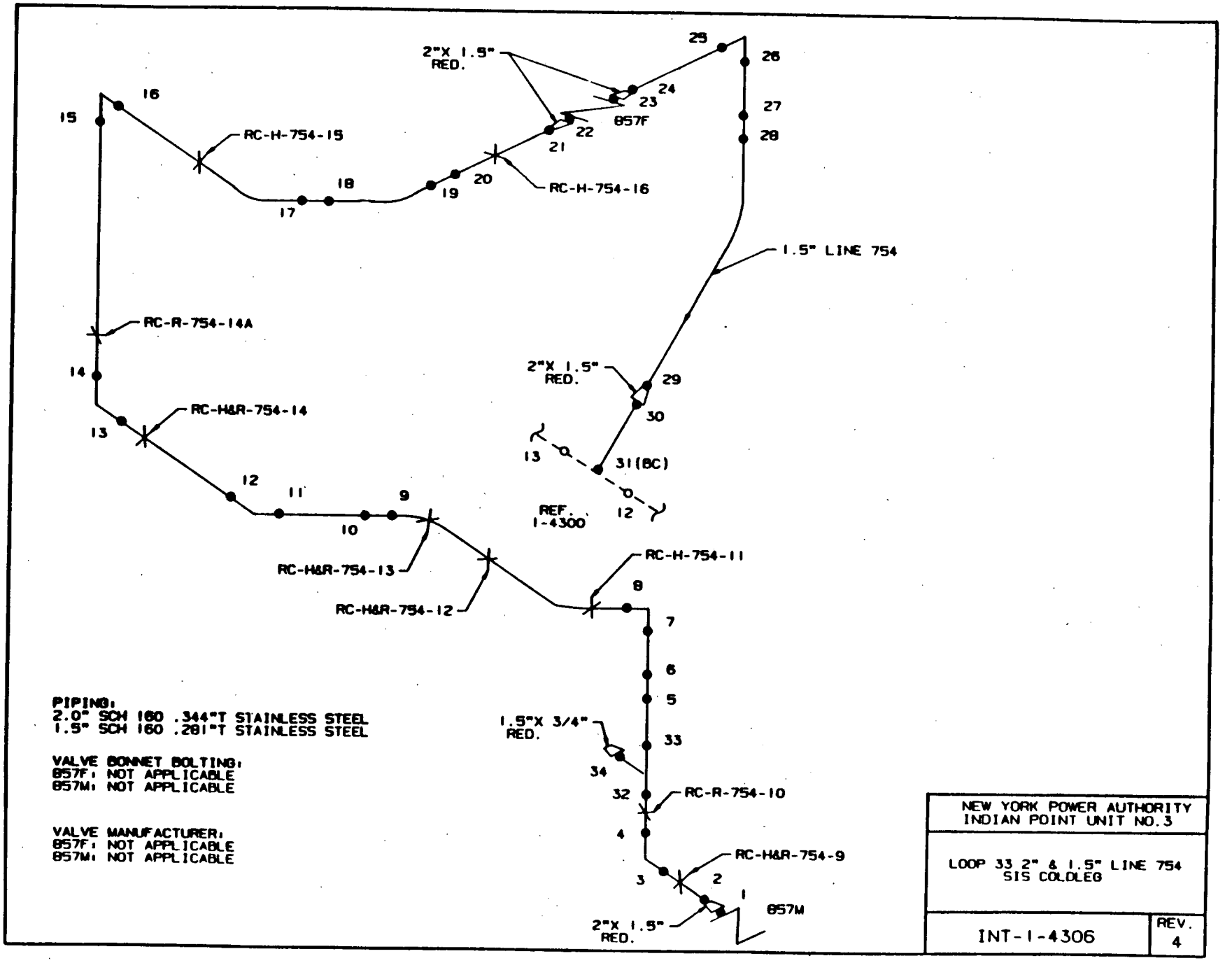
2"X 1.5" RED.
25
26
24
23
27
857F
22
28
21
16
15
RC-H-754-15
20
18
19
RC-H-754-16
17
1.5" LINE 754
RC-R-754-14A
2"X 1.5" RED.
29
14
30
RC-H&R-754-14
13
13
31(BC)
12
11
9
REF. 1-4300
12
10
RC-H-754-11
RC-H&R-754-13
8
RC-H&R-754-12
7
6
5
1.5"X 3/4" RED.
33
34
32
RC-R-754-10
4
RC-H&R-754-9
3
2
1
857M
2"X 1.5" RED.
PIPING:
2.0" SCH 160 .344"T STAINLESS STEEL
1.5" SCH 160 .281"T STAINLESS STEEL
VALVE BONNET BOLTING:
857F: NOT APPLICABLE
857M: NOT APPLICABLE
VALVE MANUFACTURER:
857F: NOT APPLICABLE
857M: NOT APPLICABLE
NEW YORK POWER AUTHORITY
INDIAN POINT UNIT NO.3
LOOP 33 2" & 1.5" LINE 754
SIS COLDLEG
INT-I-4306
REV.
4

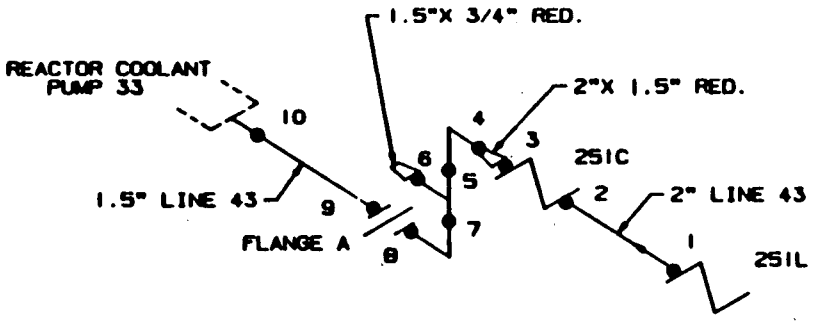

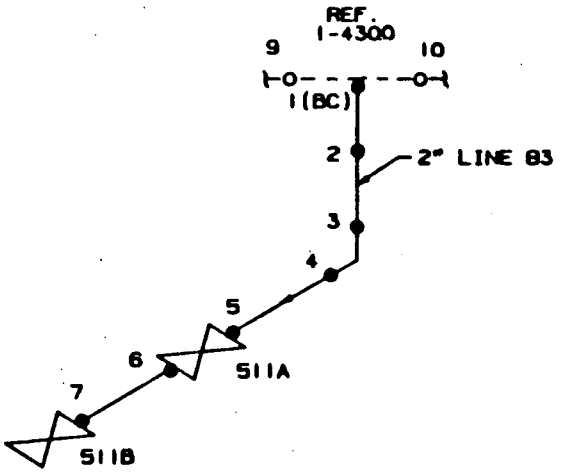

PIPING:
2.0" SCH 160 .344"T STAINLESS STEEL
1.5" SCH 160 .281"T STAINLESS STEEL

VALVE BONNET BOLTING:
251C:NOT APPLIACBLE
251L:NOT APPLIACBLE
511A:NOT APPLICABLE
511B:NOT APPLICABLE

VALVE MANUFACTURER:
251C:NOT APPLICABLE
251L:NOT APPLICABLE
511A:NOT APPLICABLE
511B:NOT APPLICABLE

FLANGE BOLTING:
FLANGE A:4 STUDS & 8 NUTS

NEW YORK POWER AUTHORITY INDIAN POINT UNIT NO.3	
INT-1-4307 LOOP 33 2" & 1.5" LINE 43 SEAL INJECTION INT-1-4308 LOOP 33 2" LINE 83 DRAIN	
INT-1-4307 & INT-1-4308	REV. 3

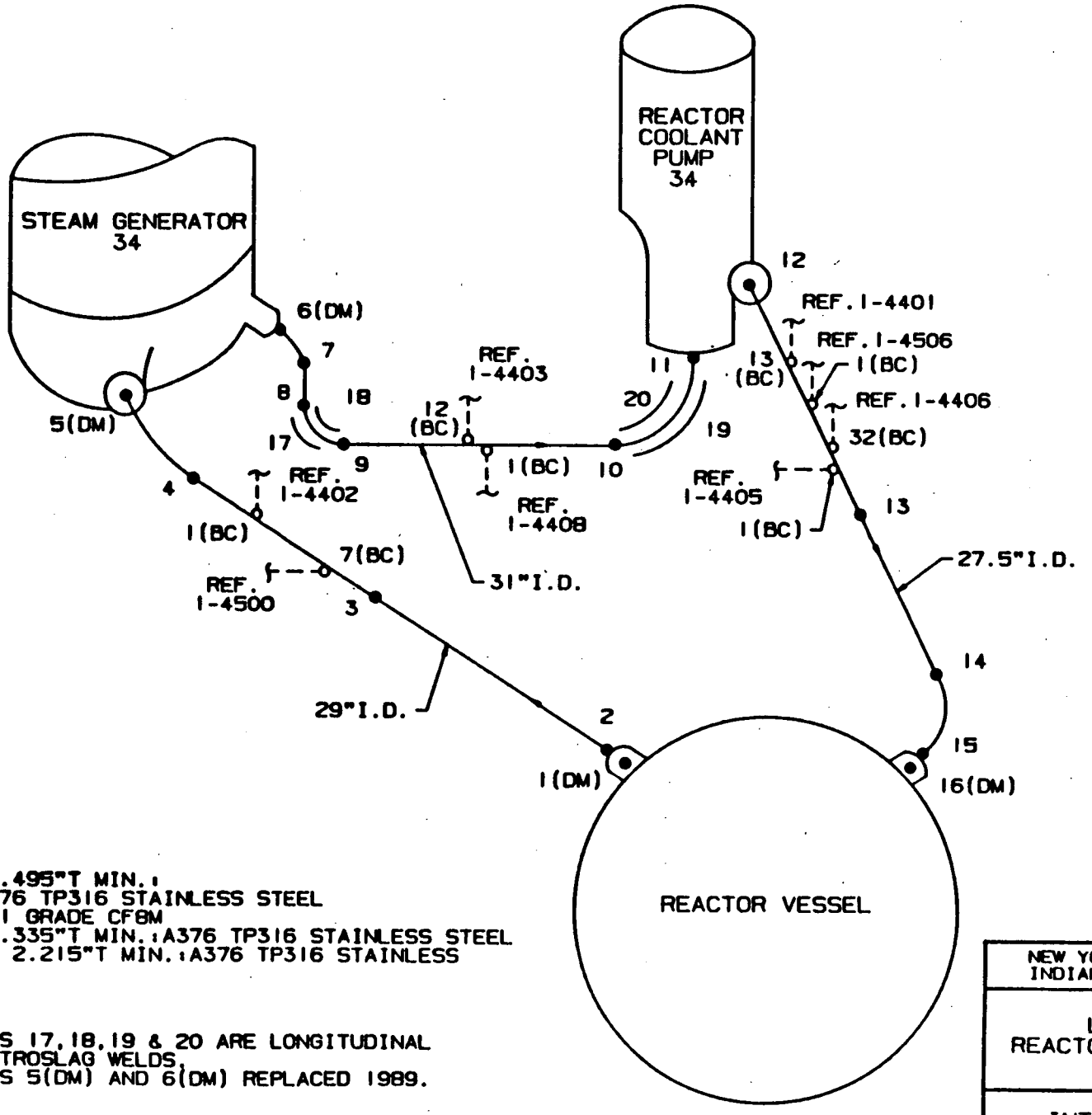

PIPING:
31" I.D. 2.495"T MIN.:
PIPING:-A376 TP316 STAINLESS STEEL
ELBOWS-A351 GRADE CF8M
29" I.D. 2.335"T MIN.:A376 TP316 STAINLESS STEEL
27.5" I.D. 2.215"T MIN.:A376 TP316 STAINLESS

NOTE: WELDS 17,18,19 & 20 ARE LONGITUDINAL ELECTROSLAG WELDS.
WELDS 5(DM) AND 6(DM) REPLACED 1989.

NEW YORK POWER AUTHORITY INDIAN POINT UNIT NO.3	
LOOP 34 REACTOR COOLANT PIPE	
INT-1-4400	REV. 4

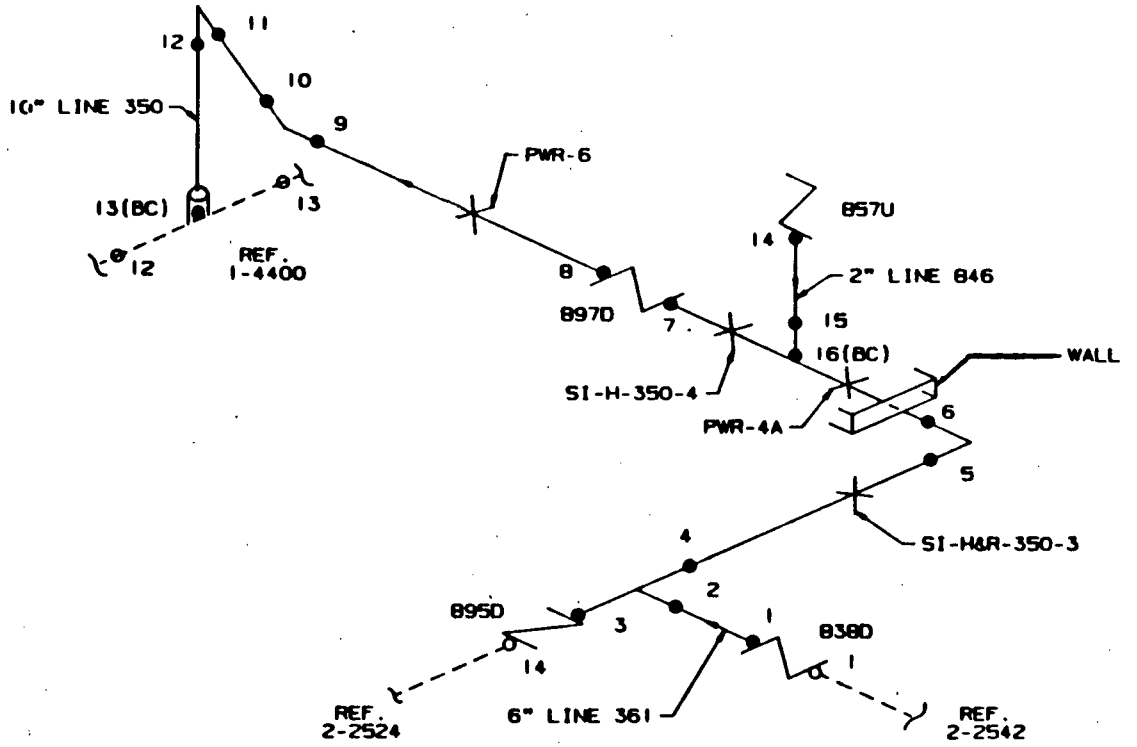

PIPING:
10" SCH 140 1.00"T STAINLESS STEEL
6" SCH 120 .562"T STAINLESS STEEL
2" SCH 160 .344"T STAINLESS STEEL

VALVE BONNET BOLTING:
897D:16 STUDS & 16 NUTS
895D:16 STUDS & 16 NUTS
838D:12 STUDS & 12 NUTS
857U:NOT APPLICABLE

VALVE MANUFACTURER:
897D:DARLING
895D:DARLING
838D:VELAN

INTEGRALLY WELDED ATTACHMENTS:
PWR-4A:

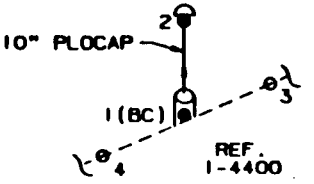

NEW YORK POWER AUTHORITY INDIAN POINT UNIT NO.3	
INT-I-4401 10" LINE 350 ACCUMULATOR DISCHARGE,6" LINE 361 RHR & 2" LINE 846 SIS INT-I-4402 10" PLOCAP	
INT-I-4401 & INT-I-4402	REV. 3

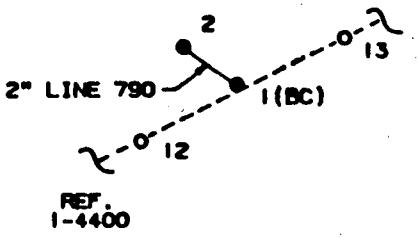

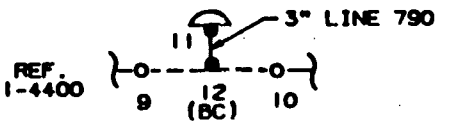

PIPING:
3.0" SCH 160 .438"T STAINLESS STEEL
2.0" SCH 160 .344"T STAINLESS STEEL

NOTE: INT-I-4403 3" LINE 790 DELETED AND CAPPED 1989.WELD 11 INSTALLED 1989.
INT-I-4404 2" LINE 791 DELETED 1989.
INT-I-4405 2" LINE 790 DELETED AND BOSSED 1989.WELD 2 INSTALLED 1989.

NEW YORK POWER AUTHORITY INDIAN POINT UNIT NO.3	
INT-I-4403 LOOP 34 3" LINE 790 RTD INT-I-4405 LOOP 34 2" LINE 790 RTD	
INT-I-4403 & INT-I-4405	REV. 6

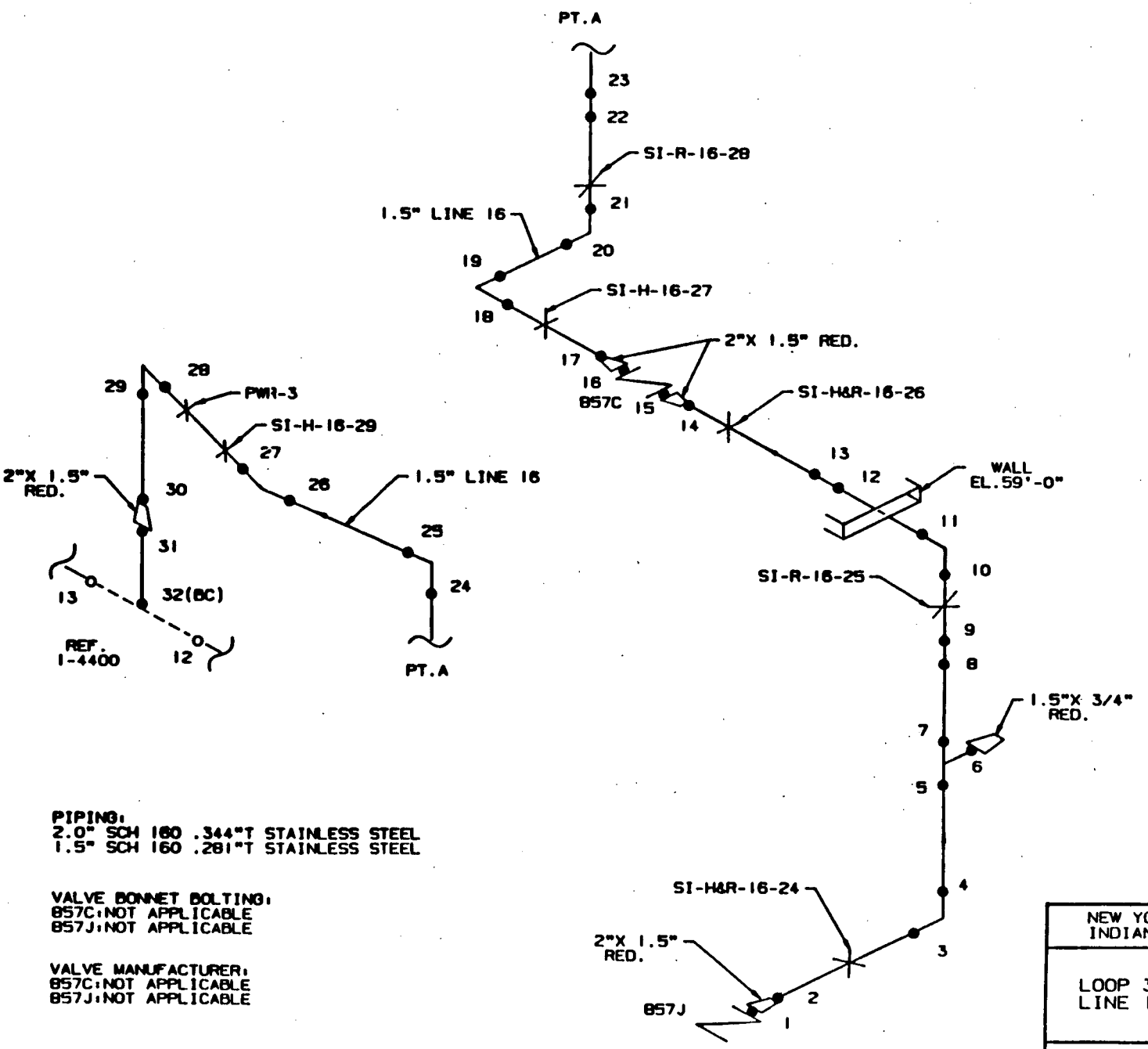

PIPING:
2.0" SCH 160 .344"T STAINLESS STEEL
1.5" SCH 160 .281"T STAINLESS STEEL

VALVE BONNET BOLTING:
857C:NOT APPLICABLE
857J:NOT APPLICABLE

VALVE MANUFACTURER:
857C:NOT APPLICABLE
857J:NOT APPLICABLE

NEW YORK POWER AUTHORITY INDIAN POINT UNIT NO.3	
LOOP 34 2" & 1.5" LINE 16 SIS COLDLEG	
INT-I-4406	REV. 4

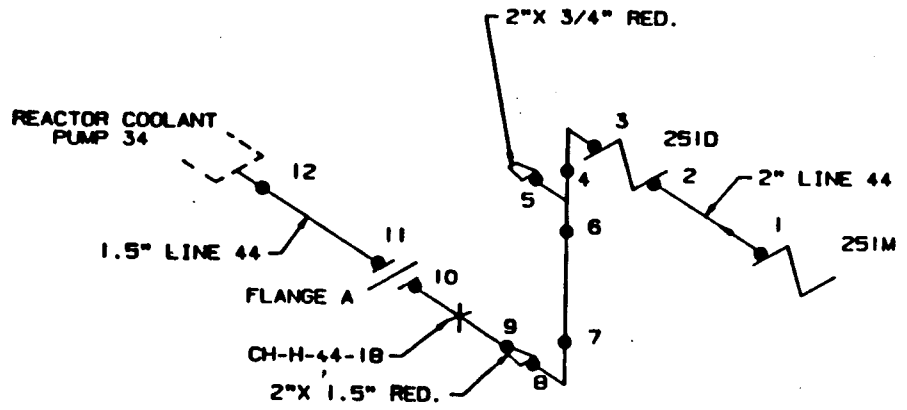

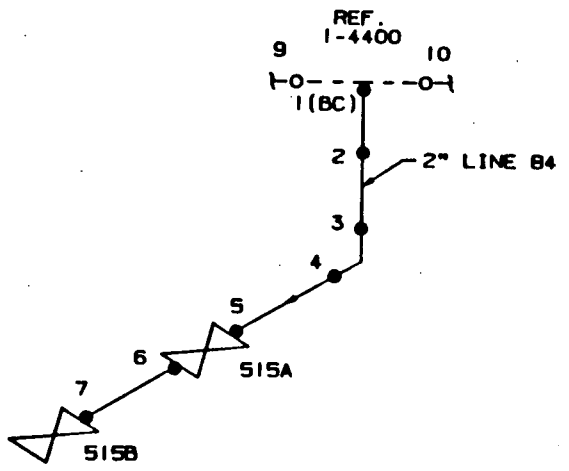

PIPING:
2.0" SCH 160 .344"T STAINLESS STEEL
1.5" SCH 160 .281"T STAINLESS STEEL

VALVE BONNET BOLTING:
251D:NOT APPLIACBLE
251M:NOT APPLIACBLE
515A:NOT APPLICABLE
515B:NOT APPLICABLE

VALVE MANUFACTURER:
251D:NOT APPLICABLE
251M:NOT APPLICABLE
515A:NOT APPLICABLE
515B:NOT APPLICABLE

FLANGE BOLTING:
FLANGE A:4 STUDS & 8 NUTS

NEW YORK POWER AUTHORITY INDIAN POINT UNIT NO.3	
INT-I-4407 LOOP 34 2" & 1.5" LINE 44 SEAL INJECTION INT-I-4408 LOOP 34 2" LINE 84 DRAIN	
INT-I-4407 & INT-I-4408	REV. 3

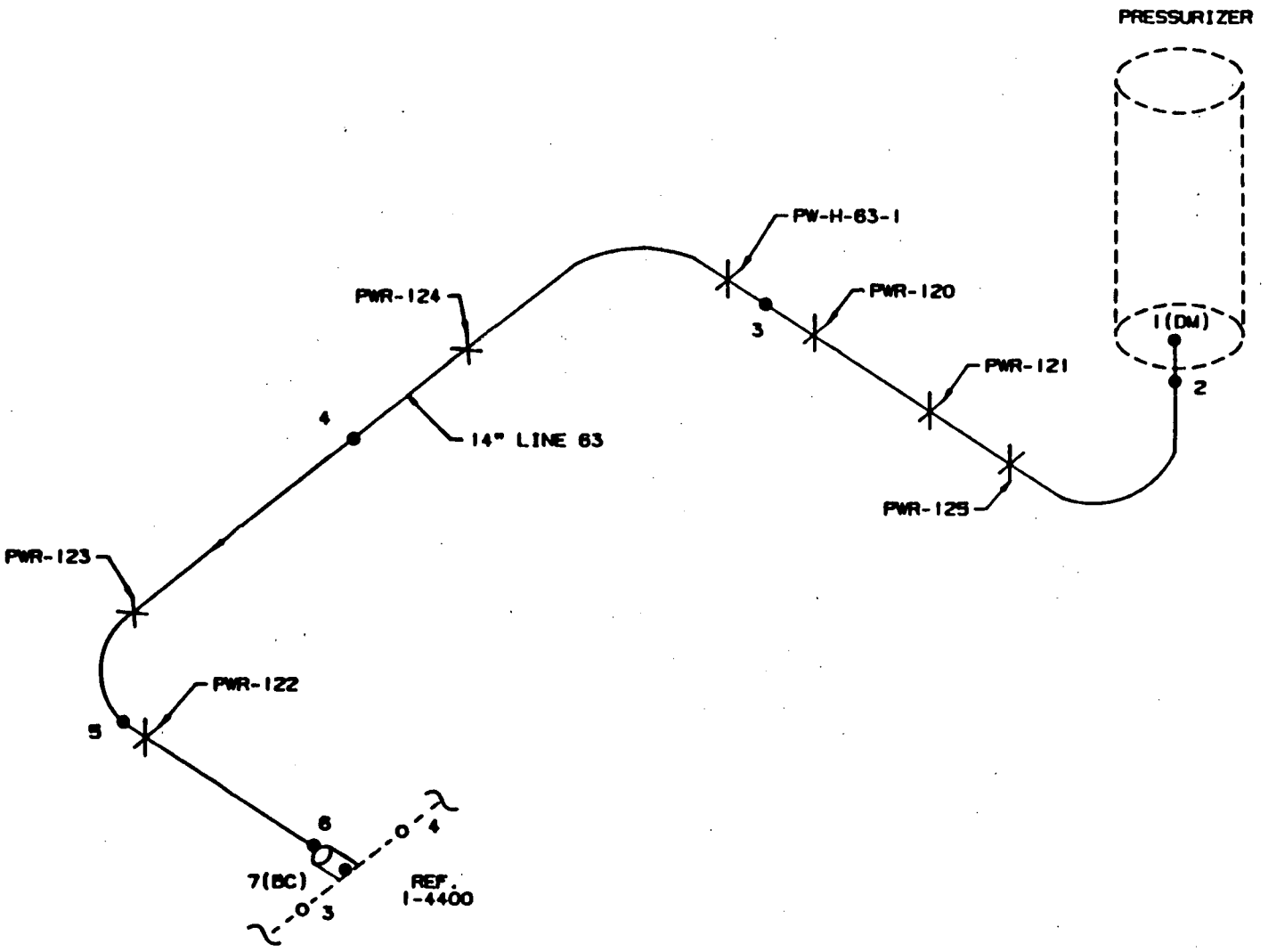

PIPING:
14" SCH 140 1.250"T STAINLESS STEEL

INTEGRALLY WELDED ATTACHMENTS:
PWR-120:1.0"T
PWR-121:1.0"T

NEW YORK POWER AUTHORITY INDIAN POINT UNIT NO.3	
14" LINE 63 PRESSURIZER SURGE	
INT-1-4500	REV. 4

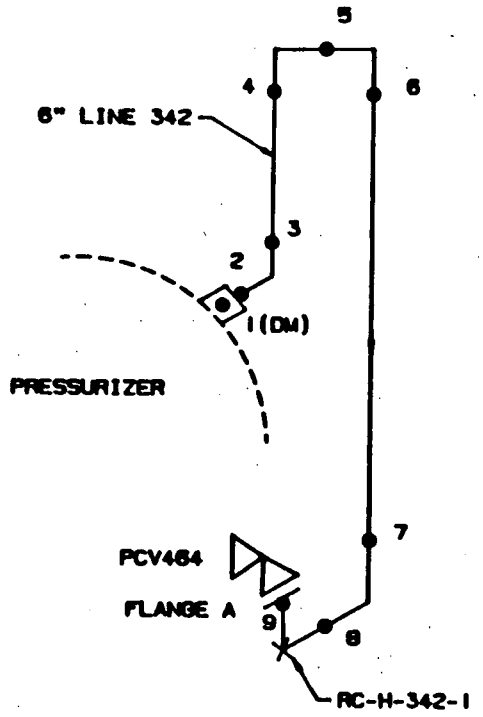

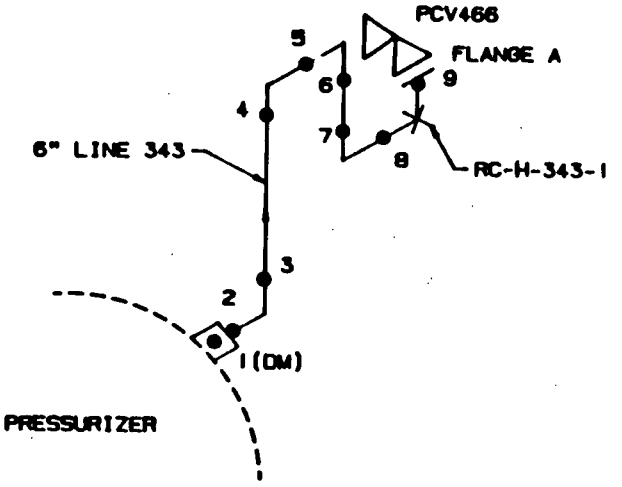

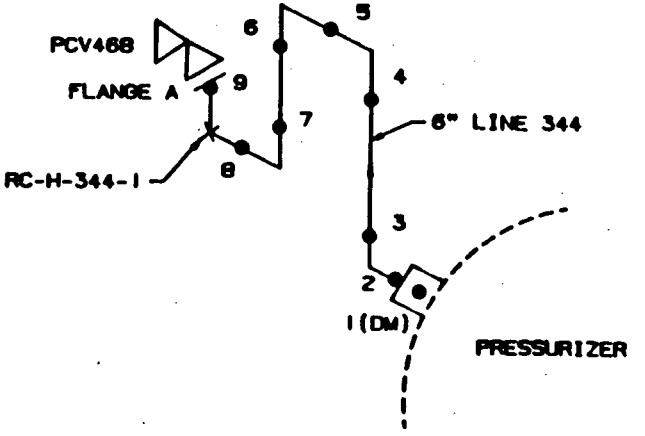

PIPING:
6.0" SCH 120 .562"T STAINLESS STEEL

VALVE BONNET BOLTING:
PCV464:8 STUDS & 8 NUTS
PCV466:8 STUDS & 8 NUTS
PCV468:8 STUDS & 8 NUTS

VALVE MANUFACTURER:
PCV464:CROSBY
PCV466:CROSBY
PCV468:CROSBY

FLANGE BOLTING:
FLANGE A:12 STUDS & 24 NUTS
FLANGE A:12 STUDS & 24 NUTS
FLANGE A:12 STUDS & 24 NUTS

INTEGRALLY WELDED ATTACHMENTS:
RC-H-342-1:0.216"T
RC-H-343-1:0.216"T
RC-H-344-1:0.216"T

NEW YORK POWER AUTHORITY INDIAN POINT UNIT NO.3	
PRESSURIZER SAFETY INT-1-4501 6" LINE 342, INT-1-4502 6" LINE 343 & INT-1-4503 6" LINE 344	
INT-1-4501, INT-1-4502 & INT-1-4503	REV. 4

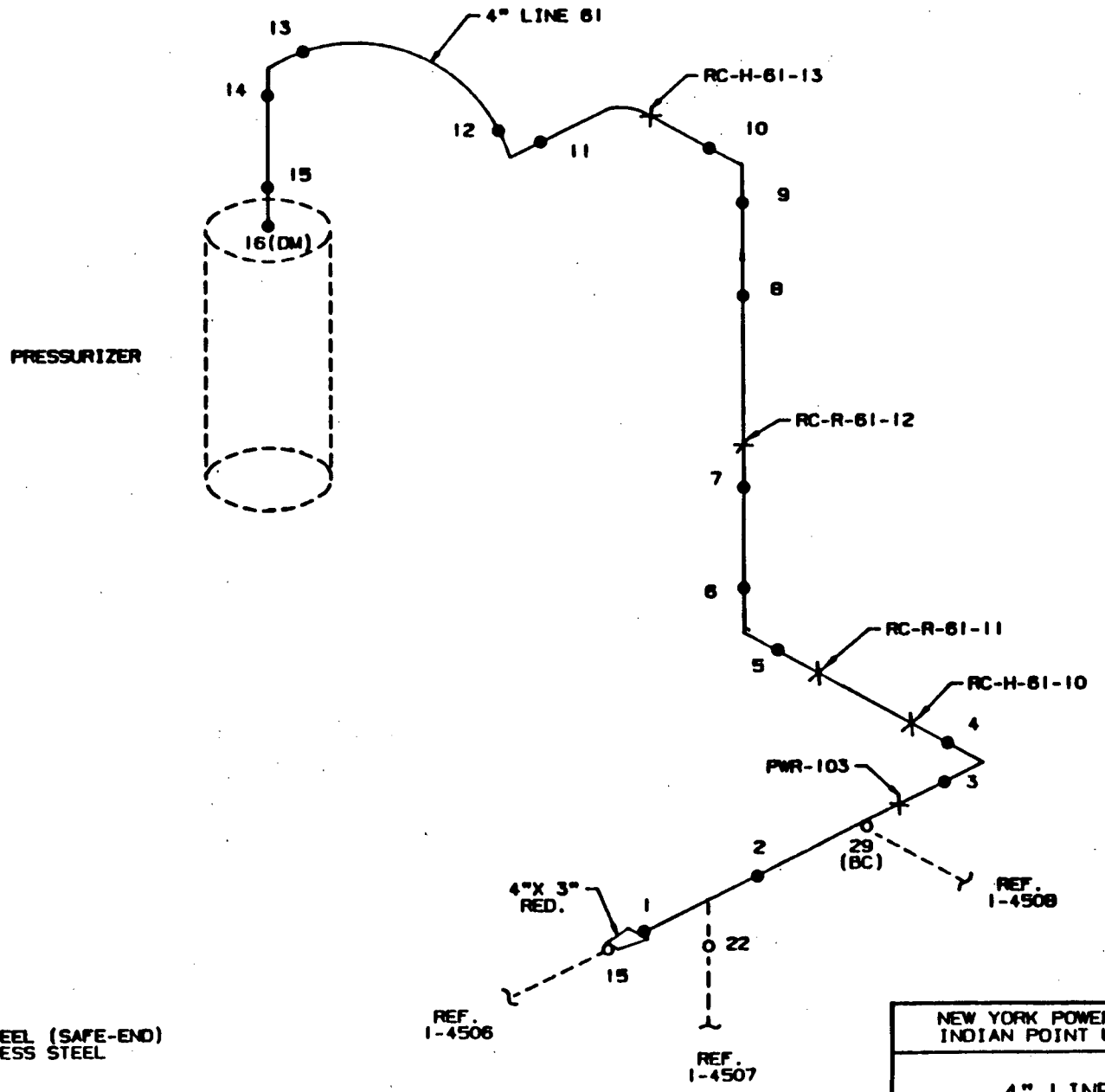

PIPING:
4" -.687"T STAINLESS STEEL (SAFE-END)
4" SCH 120 .438"T STAINLESS STEEL

NEW YORK POWER AUTHORITY INDIAN POINT UNIT NO.3	
4" LINE 61 PRESSURIZER SPRAY	
INT-1-4504	REV. 5

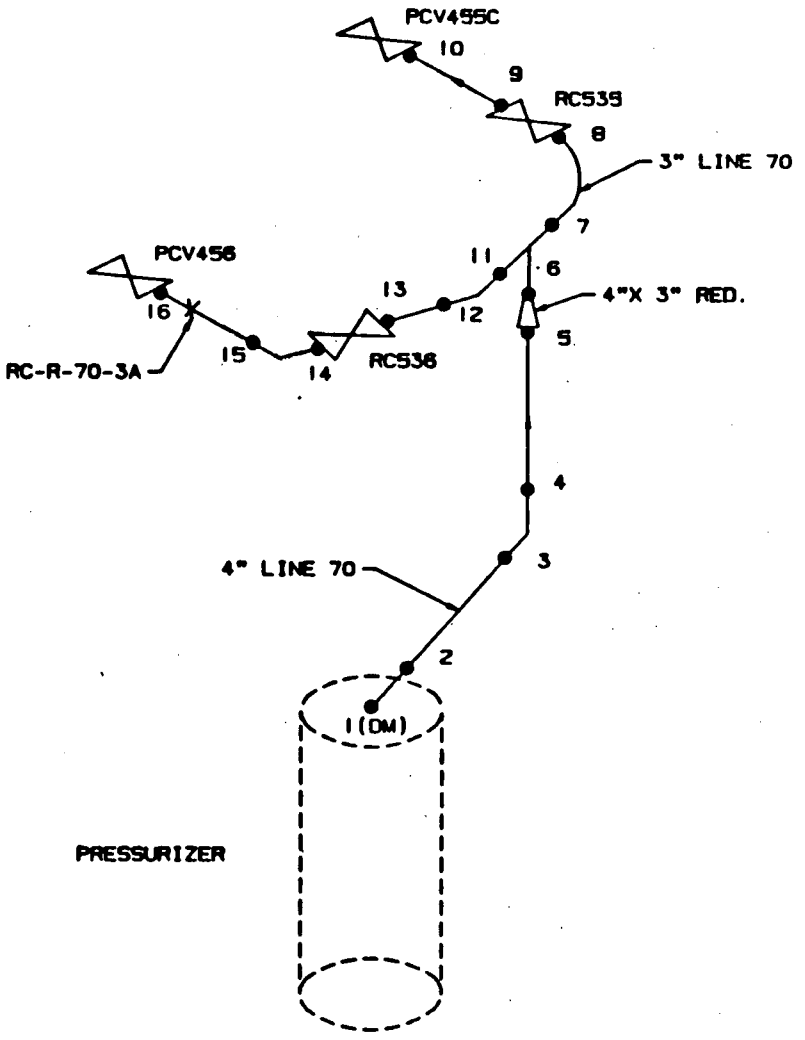

PIPING:
4" SCH 160 .531"T STAINLESS STEEL
3" SCH 160 .438"T STAINLESS STEEL

VALVE BONNET BOLTING:
RC535:12 STUDS & 12 NUTS
RC536:12 STUDS & 12 NUTS
PCV455C:6 STUDS & 6 NUTS
PCV456:6 STUDS & 6 NUTS

VALVE MANUFACTURER:
RC535:NOT APPLICABLE
RC536:NOT APPLICABLE
PCV455C:NOT APPLICABLE
PCV456:NOT APPLICABLE

NOTE:WELDS 10 & 16 INSTALLED 1977.

NEW YORK POWER AUTHORITY INDIAN POINT UNIT NO.3	
4" & 3" LINE 70 PRESSURIZER RELIEF	
INT-1-4505	REV. 5

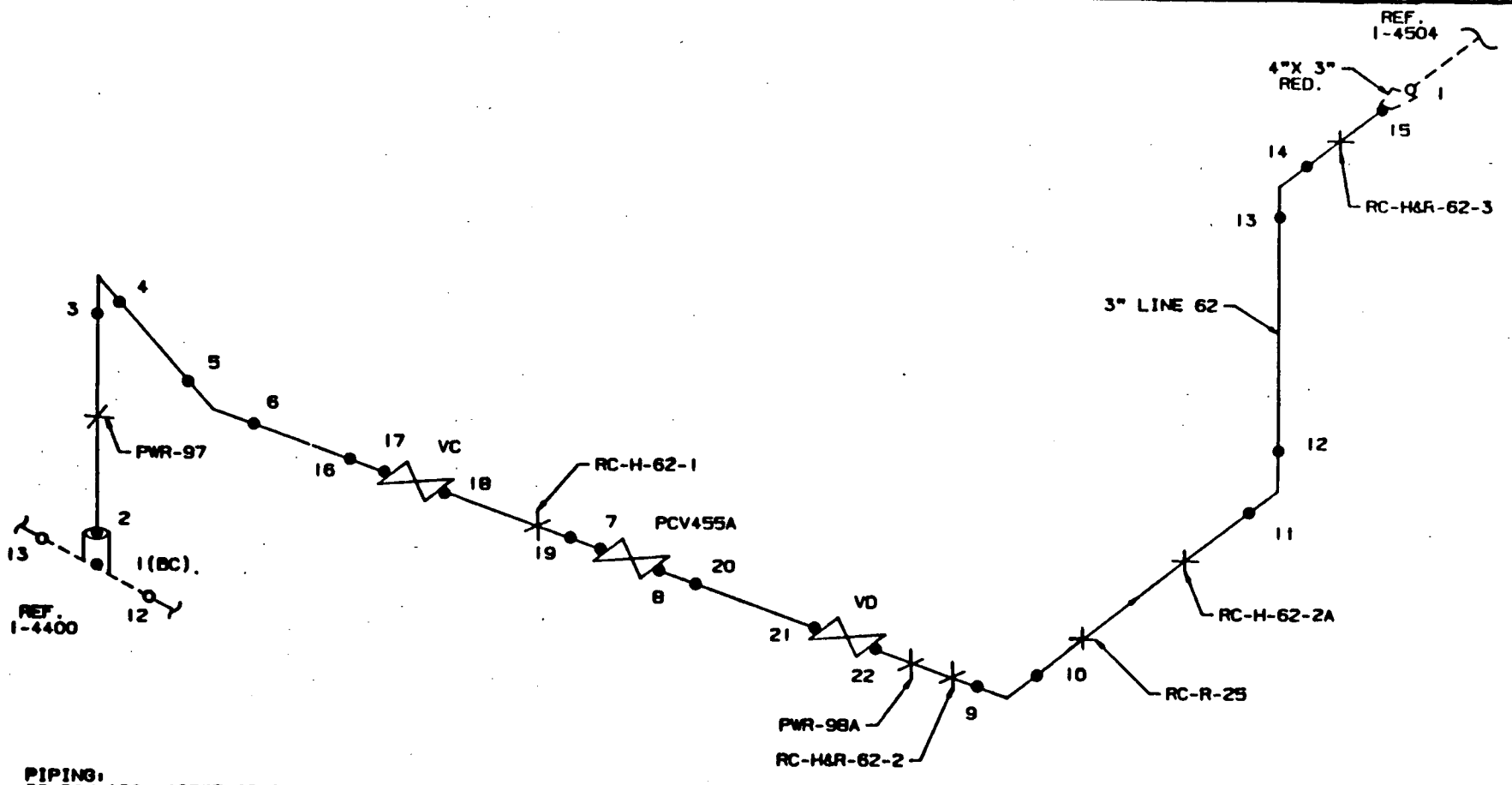

PIPING:
3" SCH 160 .438"T STAINLESS STEEL

VALVE BONNET BOLTING:
PCV455A:6 STUDS & 6 NUTS
VC:NOT APPLICABLE
VD:NOT APPLICABLE

VALVE MANUFACTURER:
PCV455A:NOT APPLICABLE
VC:NOT APPLICABLE
VD:NOT APPLICABLE

NOTE:
WELDS 16 THRU 22 ADDED 1979
WELDS 9 & 10 REPLACED 1979
VALVES VC & VD ADDED 1979
HANGER LOCATIONS REVISED 1979

NEW YORK POWER AUTHORITY INDIAN POINT UNIT NO.3	
3" LINE 62 PRESSURIZER SPRAY	
INT-1-4506	REV. 4

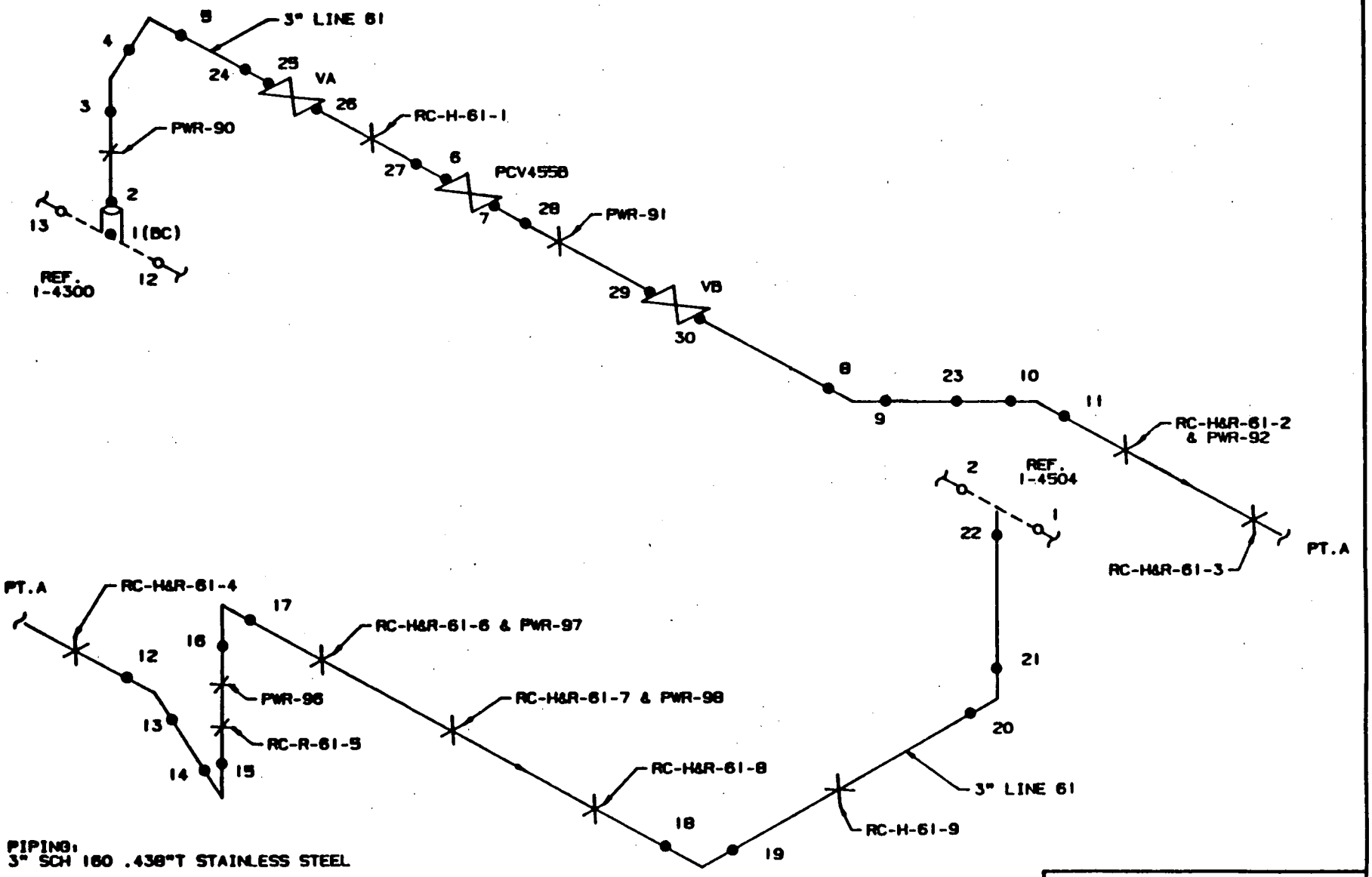

PIPING:
3" SCH 160 .438"T STAINLESS STEEL

VALVE BONNET BOLTING:
PCV455B:6 STUDS & 6 NUTS
VA:NOT APPLICABLE
VB:NOT APPLICABLE

VALVE MANUFACTURER:
PCV455B:NOT APPLICABLE
VA:NOT APPLICABLE
VB:NOT APPLICABLE

INTEGRALLLY WELDED ATTACHMENTS:
RC-H-61-9:0.145"T

NOTE:
WELDS 23 THRU 30 ADDED 1979
WELDS 8 & 9 REPLACED 1979
VALVES VA & VB ADDED 1979
HANGER LOCATIONS REVISED 1979

NEW YORK POWER AUTHORITY
INDIAN POINT UNIT NO.3

3" LINE 61
PRESSURIZER SPRAY

INT-1-4507

REV. 6

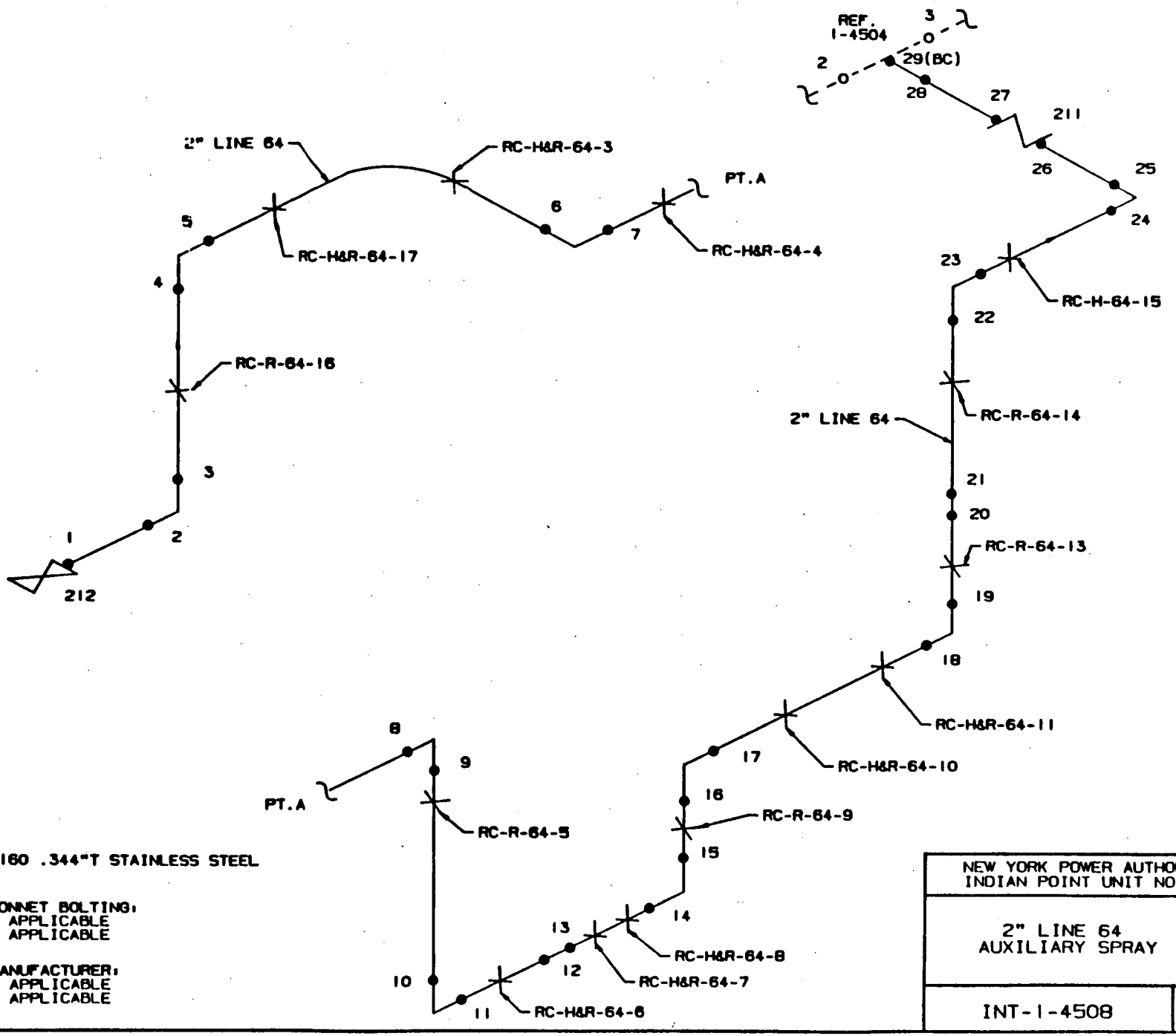

PIPING:
2" SCH 160 .344"T STAINLESS STEEL

VALVE BONNET BOLTING:
211:NOT APPLICABLE
212:NOT APPLICABLE

VALVE MANUFACTURER:
211:NOT APPLICABLE
212:NOT APPLICABLE

NEW YORK POWER AUTHORITY
INDIAN POINT UNIT NO.3

2" LINE 64
AUXILIARY SPRAY

INT-1-4508

REV. 4

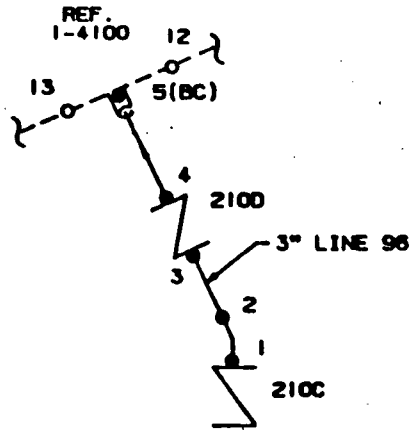

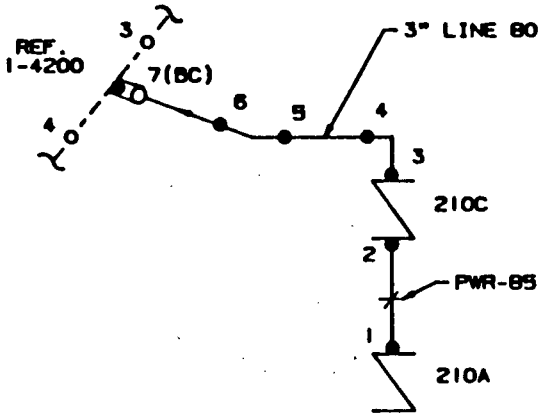

PIPING:
3.0" SCH 160 .438"T STAINLESS STEEL

VALVE BONNET BOLTING:
210A: 12 STUDS & 12 NUTS
210B: 12 STUDS & 12 NUTS
210C: 12 STUDS & 12 NUTS
210D: 12 STUDS & 12 NUTS

VALVE MANUFACTURER:
210A: NOT APPLICABLE
210B: NOT APPLICABLE
210C: NOT APPLICABLE
210D: NOT APPLICABLE

NEW YORK POWER AUTHORITY INDIAN POINT UNIT NO.3	
INT-1-4600 LOOP 31 3" LINE 96 CHARGING INT-1-4601 LOOP 32 3" LINE 80 CHARGING	
INT-1-4600 & INT-1-4601	REV. 4

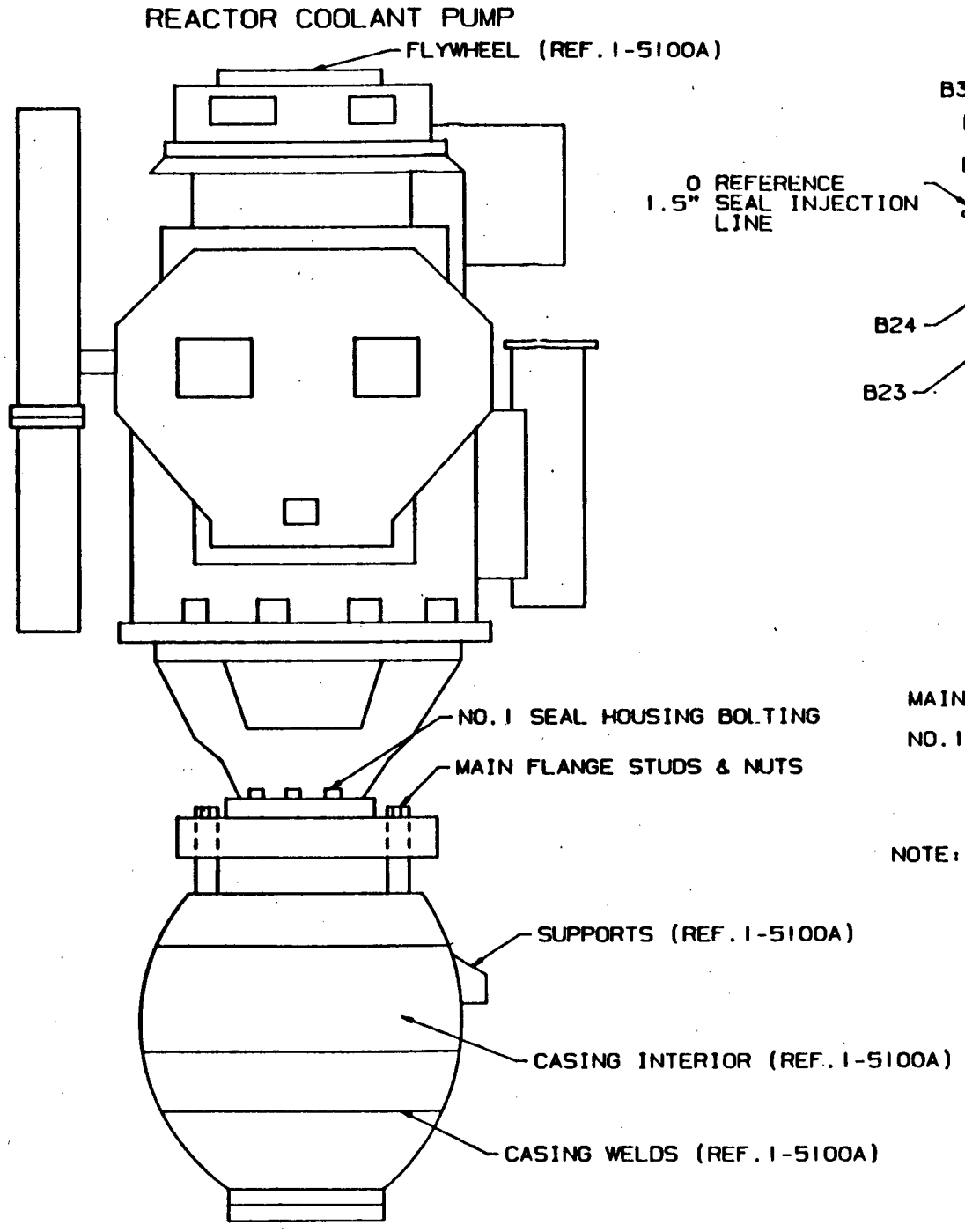

MAIN FLANGE STUDS & NUTS B1 THRU B24
&
NO. 1 SEAL HOUSING BOLTING B1 THRU B18

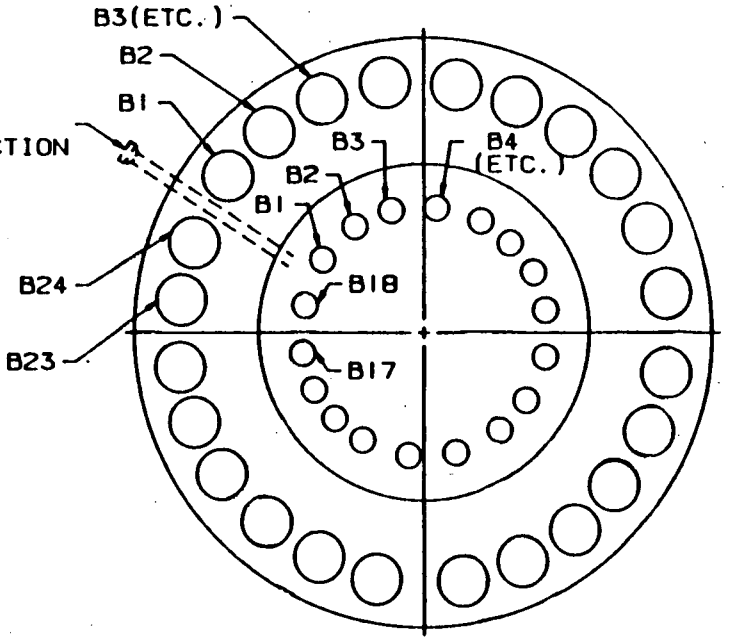

MAIN FLANGE STUDS & NUTS: 24-3.5" DIAMETER: 30.5" LENGTH
NO. 1 SEAL HOUSING BOLTS: 18-1.75" DIAMETER: 8.0" LENGTH

NOTE: BOLT, STUD OR NUT IDENTIFICATION PRECEDED BY REACTOR COOLANT PUMP DESIGNATION 31, 32, 33 OR 34 AS APPLICABLE.

NEW YORK POWER AUTHORITY INDIAN POINT UNIT NO. 3	
REACTOR COOLANT PUMPS RCPCP1-31, RCPCP2-32, RCPCP3-33 & RCPCP4-34	
INT-1-5100	REV. 4

REACTOR CCOLANT PUMP
FLYWHEEL

HOLES 1,2,3 & 4:0.875" DIAMETER
FOR RC PUMPS 31,33 & 34

HOLES 1,2,3,4,5 & 6: 1.02"
DIAMETER FOR RC PUMP 32

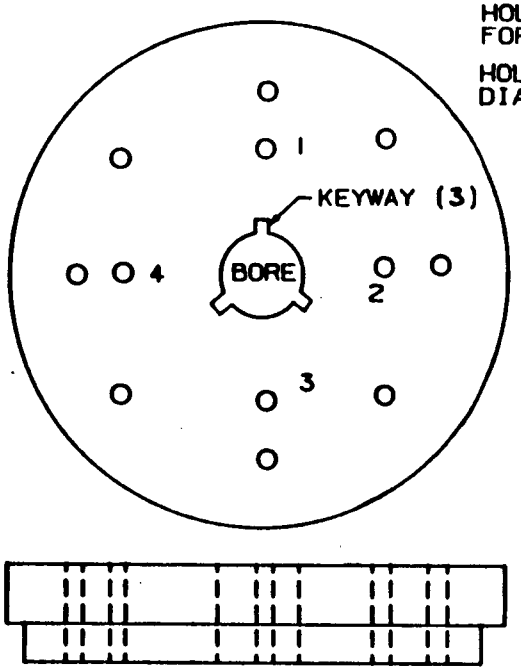

REACTOR COOLANT PUMP
CASING AND CASING WELDS

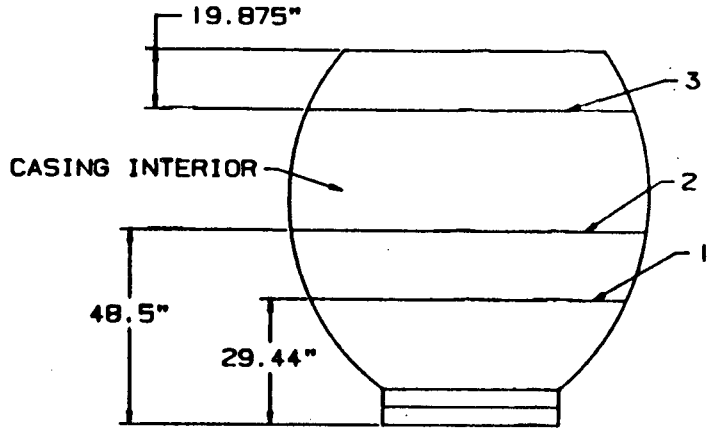

REACTOR COOLANT PUMP
SUPPORTS (WELDED ATTACHMENTS 3.0"T)

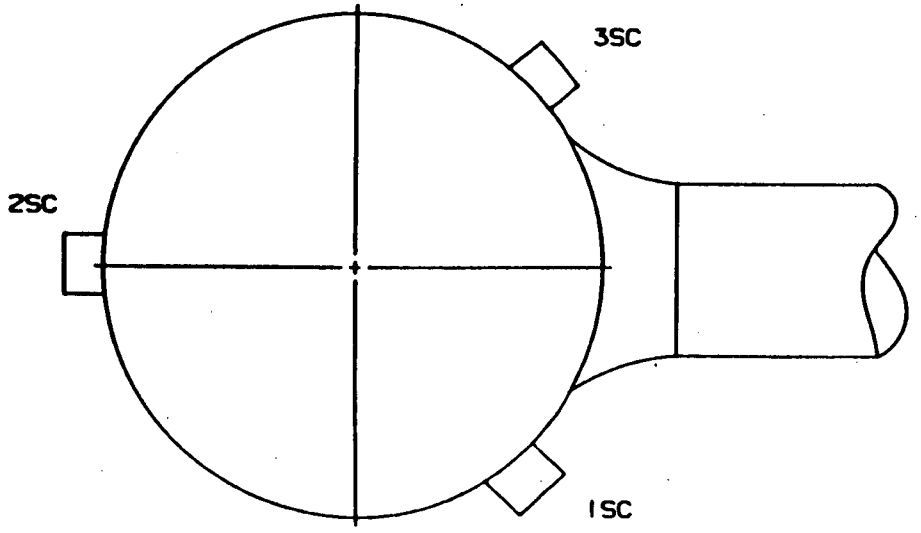

NOTE: CASING ,CASING WELD,FLYWHEEL AND SUPPORT IDENTIFICATION PRECEDED BY REACTOR COOLANT PUMP DESIGNATION 31,32,33 OR 34 AS APPLICABLE.

NEW YORK POWER AUTHORITY INDIAN POINT UNIT NO.3	
REACTOR COOLANT PUMPS RCPCP1-31,RCPCP2-32, RCPCP3-33 & RCPCP4-34	
INT-1-5100A	REV. 4

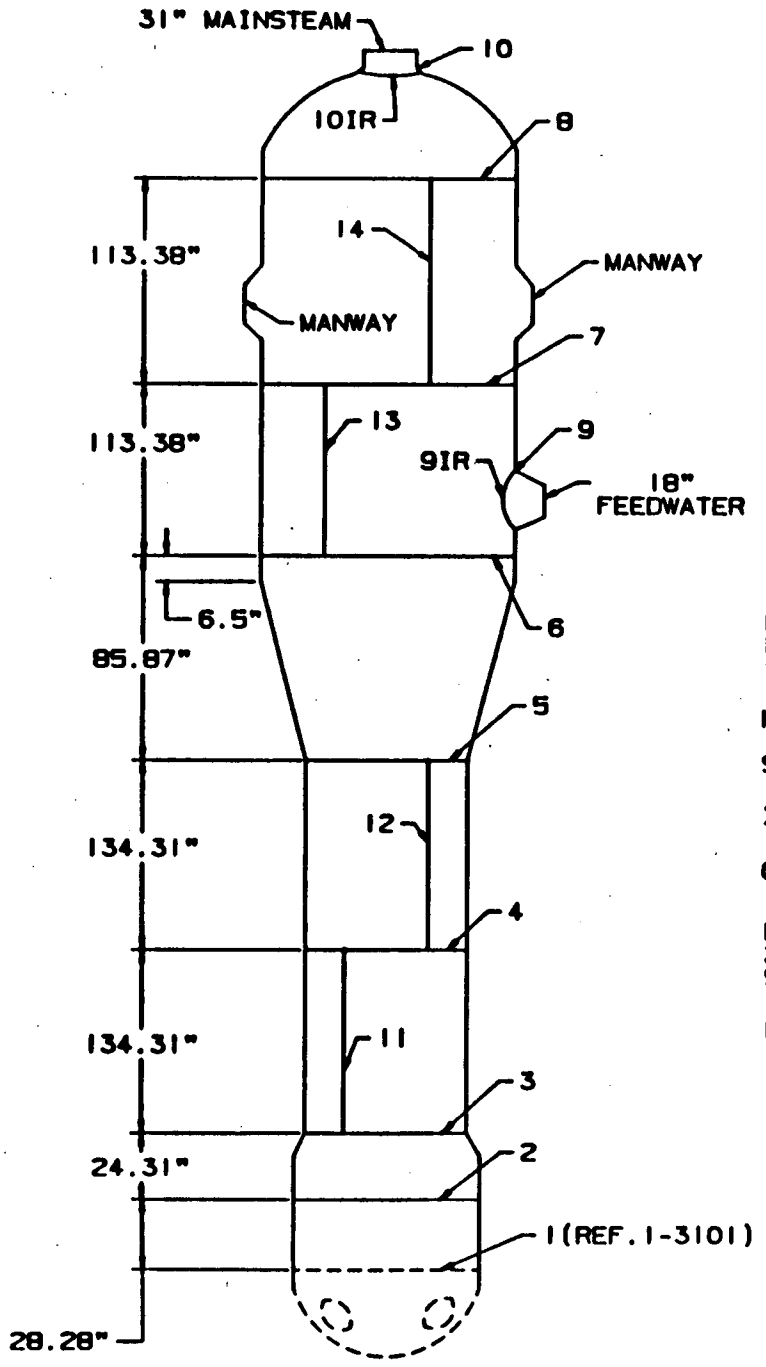

SHELL WELDS 3,4 & 5: 2.86"T
SA533 TYPE B CLASS 1 CARBON STEEL
DIAMETER:127.0";CIRCUMFERENCE:398.78"
O REFERENCE WELDS 3 & 4:TOP CENTERLINE OF PRIMARY HOTLEG MANWAY(REF.1-3101)
O REFERENCE WELD 5:TOP CENTERLINE OF FEEDWATER NOZZLE

SHELL WELDS 6 & 7: 3.7"T
SA533 TYPE B CLASS 1 CARBON STEEL
DIAMETER: 166.0";CIRCUMFERENCE:521.24"
O REFERENCE:TOP CENTERLINE OF FEEDWATER NOZZLE

HEAD WELD 8: 4.0"T
SA533 TYPE B CLASS 1 CARBON STEEL
DIAMETER:166.0";CIRCUMFERENCE:521.24"
O REFERENCE:TOP CENTERLINE OF FEEDWATER NOZZLE

TUBESHEET WELD 2: 4.0"T
SA508 CLASS 3 CARBON STEEL
DIAMETER:129.25";CIRCUMFERENCE:405.84"
O REFERENCE:TOP CENTERLINE OF PRIMARY HOTLEG MANWAY(REF.1-3101)

TRANSITION CONE: 4.2"T
SA508 CLASS 3 CARBON STEEL

NOZZLE TO SHELL WELD 9 :3.7"T
NOZZLE TO SHELL WELD 10:4.0"T
SA 533 TYPE B CLASS 1 CARBON STEEL

NOZZLE INSIDE RADIUS SECTIONS 9IR & 10IR:
18" FEEDWATER AND 31" MAINSTEAM
SA 508 CLASS 3 CARBON STEEL

INTEGRALLY WELDED ATTACHMENTS:NOT APPLICABLE

COMPONENT SUPPORTS:REFERENCE INT-2-1101A

MANWAY STUDS AND NUTS: 2 MANWAYS EACH GENERATOR;
20 STUDS AND 20 NUTS EACH MANWAY
STUD DIAMETER:1.5"

NOTE:STEAM GENERATOR IDENTIFICATION 31,32,33 OR 34 PRECEDES WELD DESIGNATION AS APPLICABLE:

NOTE:WELDS 4,7,11,12,13 & 14 NON STRUCTURAL DISCONTINUITIES.

NEW YORK POWER AUTHORITY INDIAN POINT UNIT NO.3	
REPLACEMENT STEAM GENERATORS RCPCSG1-31,RCPCSG2-32, RCPCSG3-33 & RCPCSG4-34	
INT-2-1101	REV. 1

STEAM GENERATOR SUPPORTS

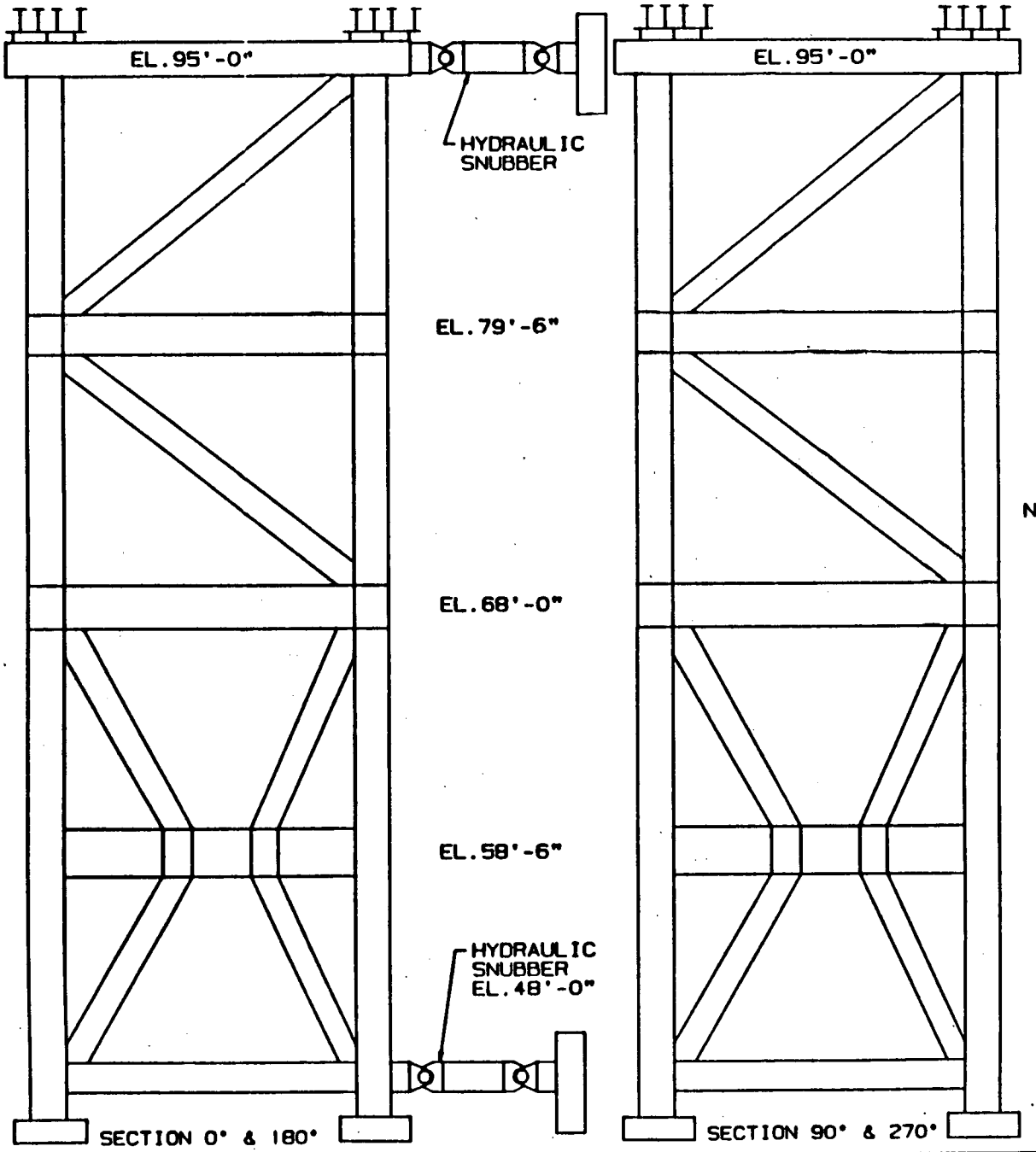

NOTE: STEAM GENERATOR IDENTITY 31,32,33 OR 34 PRECEDES SUPPORT AS APPLICABLE.

NEW YORK POWER AUTHORITY INDIAN POINT UNIT NO.3	
REPLACEMENT STEAM GENERATORS RCPCSG1-31, RCPCSG2-32, RCPCSG3-33 & RCPCSG4-34	
INT-2-1101A	REV. 0

REGENERATIVE HEAT EXCHANGER CSAHRG1-31

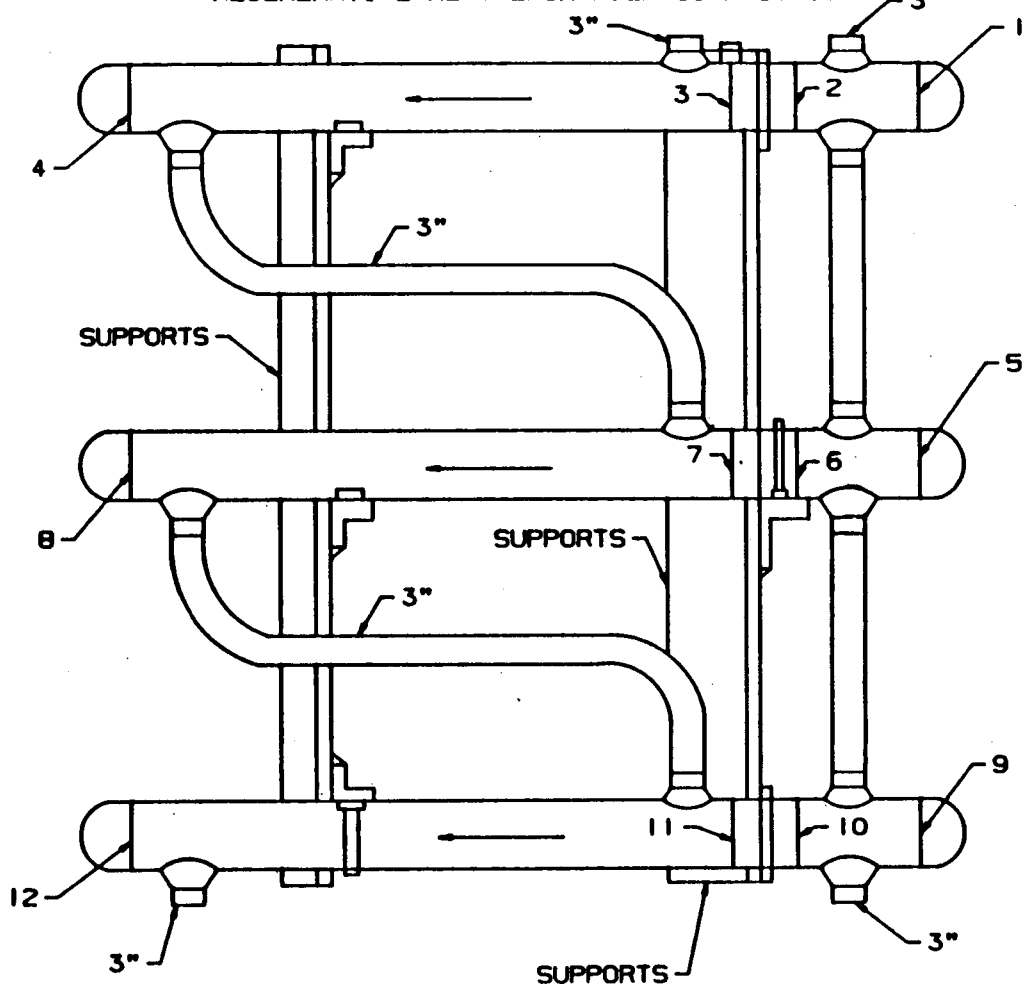

WELDS 1 THRU 12: 0.875"T A213 TP304 STAINLESS STEEL
DIAMETER:9.25";CIRCUMFERENCE:28.86"
NOZZLE IN VESSEL WELDS: 3" DIAMETER
INTEGRALLY WELDED ATTACHMENTS: NOT APPLICABLE
COMPONENT SUPPORTS: AS APPLICABLE
BOLTING: NOT APPLICABLE
0 REFERENCE: TOP CENTERLINE OF WELD

NEW YORK POWER AUTHORITY INDIAN POINT UNIT NO.3	
REGENERATIVE HEAT EXCHANGER CSAHRG1-31	
INT-2-1110	REV. 4

RESIDUAL HEAT EXCHANGER ACAHRS1-31

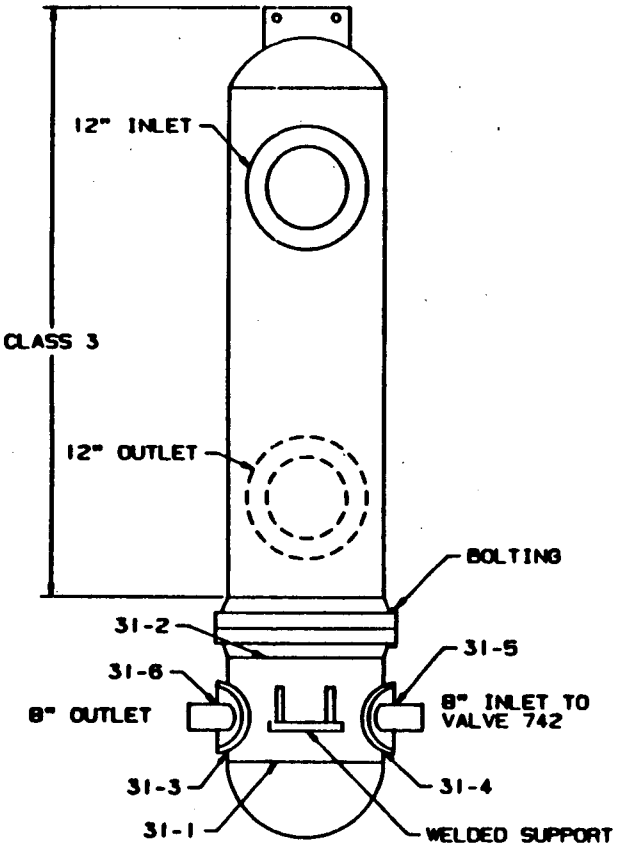

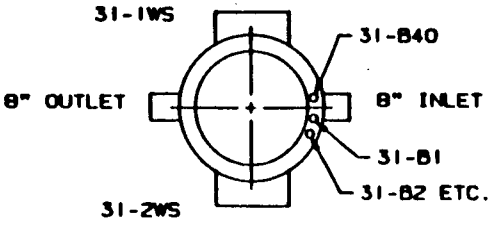

RESIDUAL HEAT EXCHANGER ACAHRS2-32

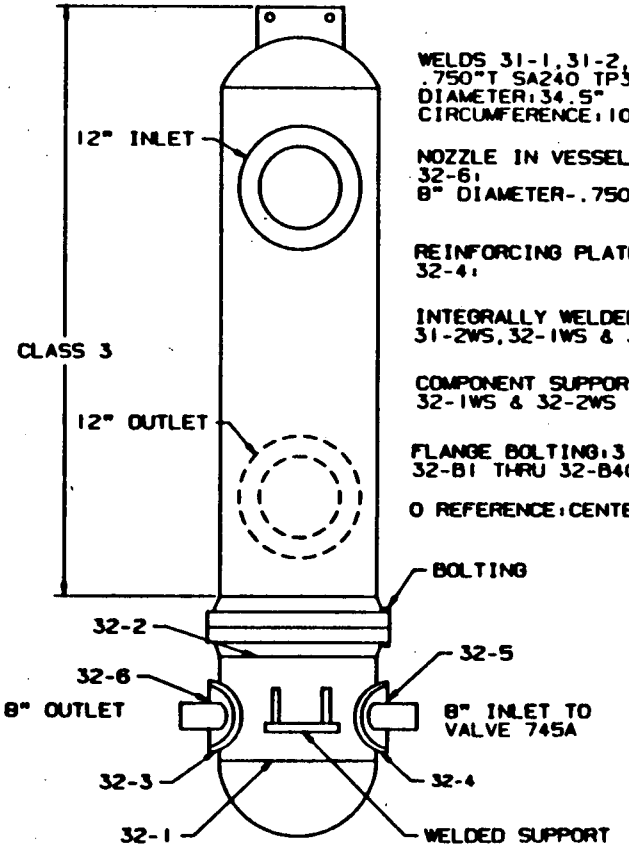

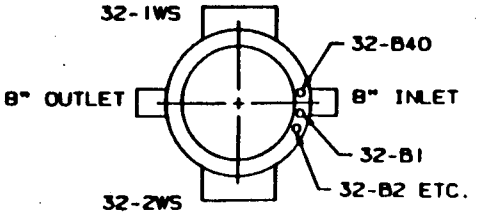

WELDS 31-1,31-2,32-1 & 32-2:
.750"T SA240 TP304 STAINLESS STEEL
DIAMETER:34.5"
CIRCUMFERENCE:108.33"

NOZZLE IN VESSEL WELDS 31-5,31-6,32-5 & 32-6:
8" DIAMETER-.750"T (NOT ACCESSIBLE)

REINFORCING PLATE WELDS 31-3,31-4,32-3 & 32-4:

INTEGRALLY WELDED ATTACHMENTS 31-1WS, 31-2WS,32-1WS & 32-2WS: 0.75"T

COMPONENT SUPPORTS:31-1WS,31-2WS, 32-1WS & 32-2WS

FLANGE BOLTING:31-B1 THRU 31-B40 & 32-B1 THRU 32-B40: 1.25" DIAMETER

0 REFERENCE:CENTERLINE OF 8" INLET NOZZLE

NEW YORK POWER AUTHORITY INDIAN POINT UNIT NO.3	
RESIDUAL HEAT EXCHANGER ACAHRS1-31 RESIDUAL HEAT EXCHANGER ACAHRS2-32	
INT-2-1120	REV. 3

SEAL WATER HEAT EXCHANGER CSAHSW1-31

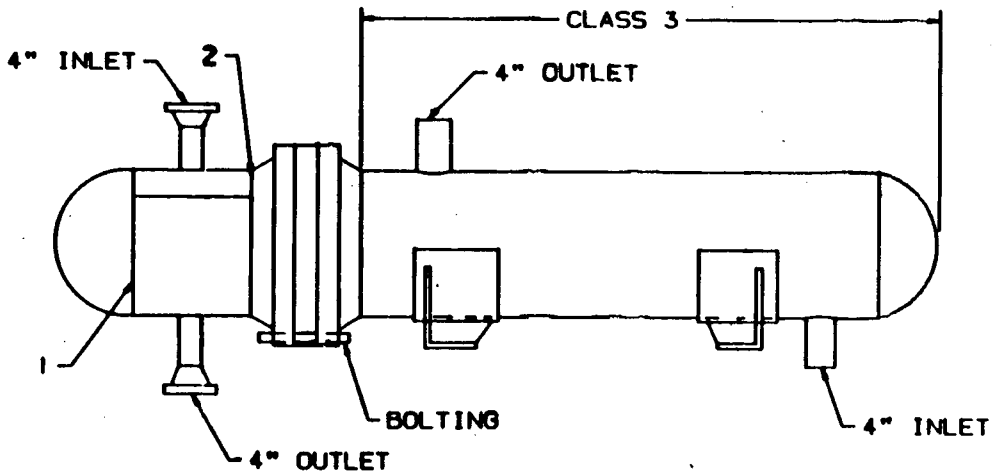

WELDS 1 & 2: 0.187"T SA240 TP304 STAINLESS STEEL
DIAMETER: 16.0"; CIRCUMFERENCE: 50.24"
NOZZLE IN VESSEL WELDS: 4" DIAMETER
INTEGRALLY WELDED ATTACHMENTS: NOT APPLICABLE
COMPONENTS SUPPORTS: NOT APPLICABLE
FLANGE BOLTING" 20-0.750" DIAMETER
0 REFERENCE: CENTERLINE OF 4" INLET NOZZLE

NEW YORK POWER AUTHORITY INDIAN POINT UNIT NO.3	
SEAL WATER HEAT EXCHANGER CSAHSW1-31	
INT-2-1130	REV. 2

NON REGENERATIVE LETDOWN HEAT EXCHANGER
CSAHNRT-31

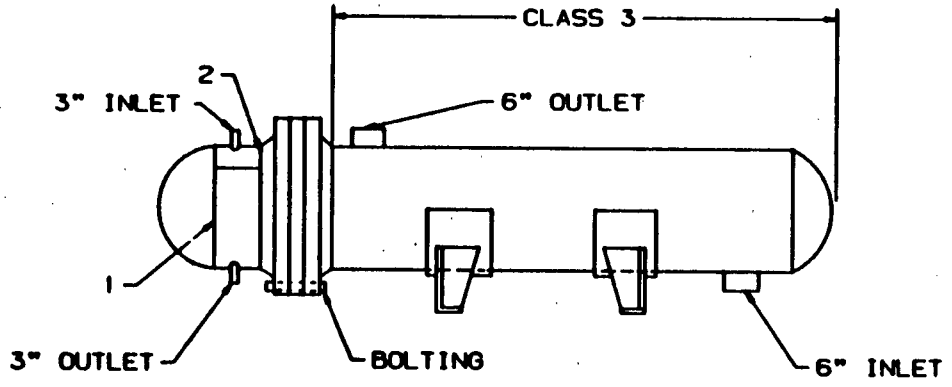

WELDS 1 & 2: 0.625"T SA240 TP304 STAINLESS STEEL
DIAMETER:22.0"; CIRCUMFERENCE: 69.08"
NOZZLE IN VESSEL WELDS: 3" DIAMETER
INTEGRALLY WELDED ATTACHMENTS: NOT APPLICABLE
COMPONENT SUPPORTS: NOT APPLICABLE
FLANGE BOLTING: 32-1.0" DIAMETER
0 REFERENCE: CENTERLINE OF 3" INLET NOZZLE

NEW YORK POWER AUTHORITY INDIAN POINT UNIT NO.3	
NON REGENERATIVE LETDOWN HEAT EXCHANGER CSAHNRT-31	
INT-2-1140	REV. 2

EXCESS LETDOWN HEAT EXCHANGER CSAHEL1-31

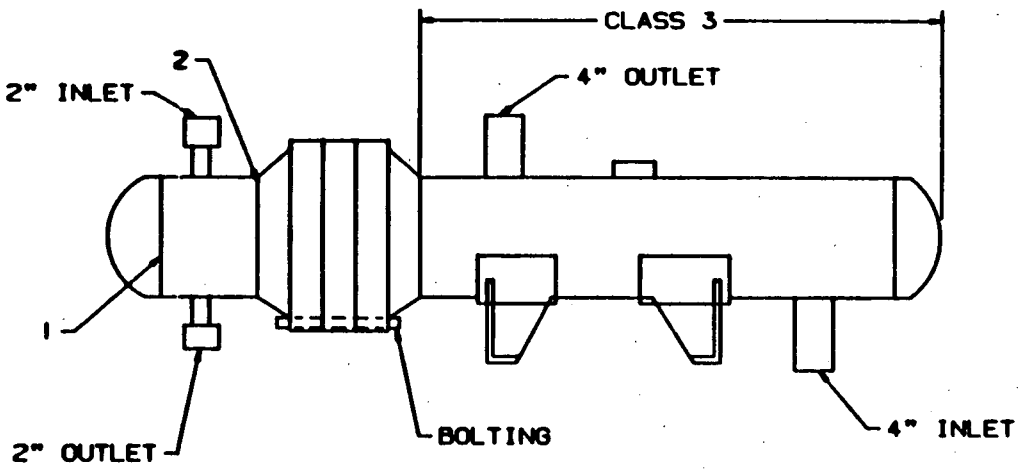

WELDS 1 & 2: 0.750"T SA240 TP304 STAINLESS STEEL
DIAMETER: 9.5"; CIRCUMFERENCE: 29.85"
NOZZLE IN VESSEL WELDS: 2" DIAMETER
INTEGRALLY WELDED ATTACHMENTS: NOT APPLICABLE
COMPONENT SUPPORTS: NOT APPLICABLE
FLANGE BOLTING: 12-1.625" DIAMETER
0 REFERENCE: CENTERLINE OF 2" INLET NOZZLE

NEW YORK POWER AUTHORITY INDIAN POINT UNIT NO.3	
EXCESS LETDOWN HEAT EXCHANGER CSAHEL1-31	
INT-2-1150	REV. 2

VOLUME CONTROL TANK
CSATVC1-31

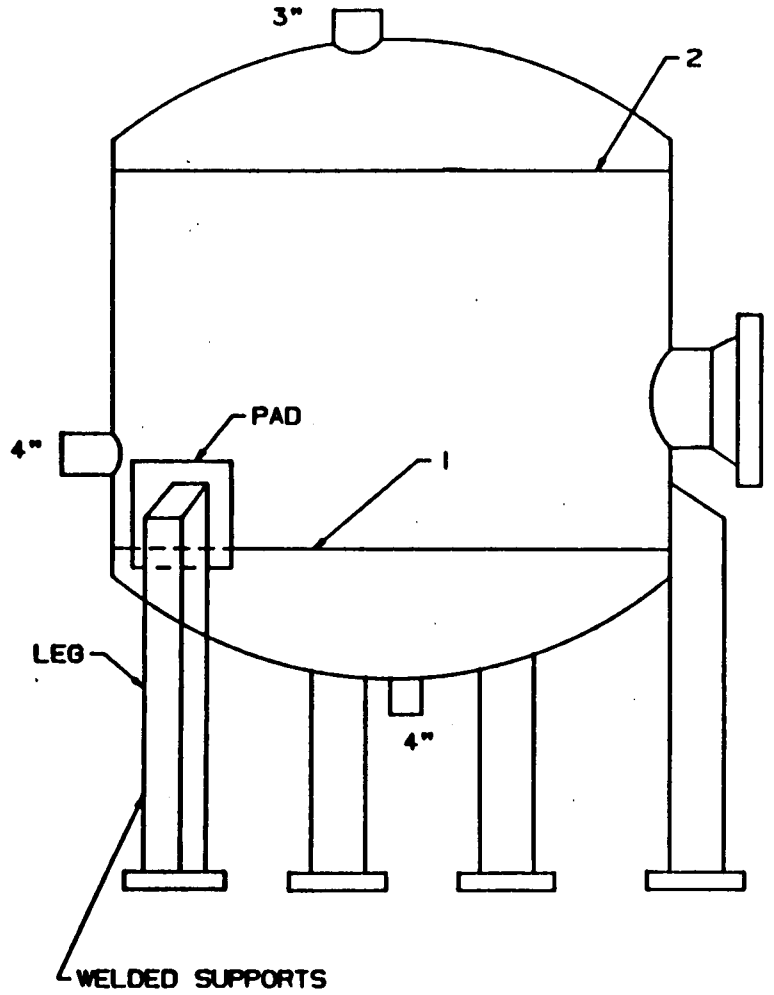

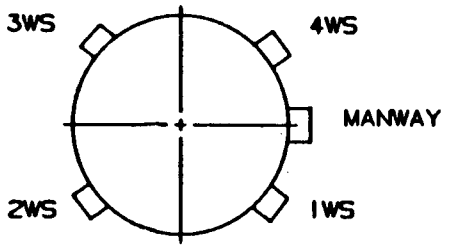

MANWAY

WELDS 1 & 2: 0.250"T SA240 TP304 STAINLESS STEEL
DIAMETER: 90.5";CIRCUMFERENCE 284.17"
NOZZLE IN VESSEL WELDS: 4" & 3" DIAMETER
INTEGRALLY WELDED ATTACHMENTS: 4-PAD:0.40"T;LEG:0.35"T
COMPONENT SUPPORTS: WELDED ATTACHMENTS-1WS,2WS,3WS & 4WS
MANWAY BOLTING: 16-1.125" DIAMETER
0 REFERENCE: CENTERLINE OF MANWAY

NEW YORK POWER AUTHORITY INDIAN POINT UNIT NO.3	
VOLUME CONTROL TANK CSATVC1-31	
INT-2-1200	REV. 3

ACCUMULATOR TANK

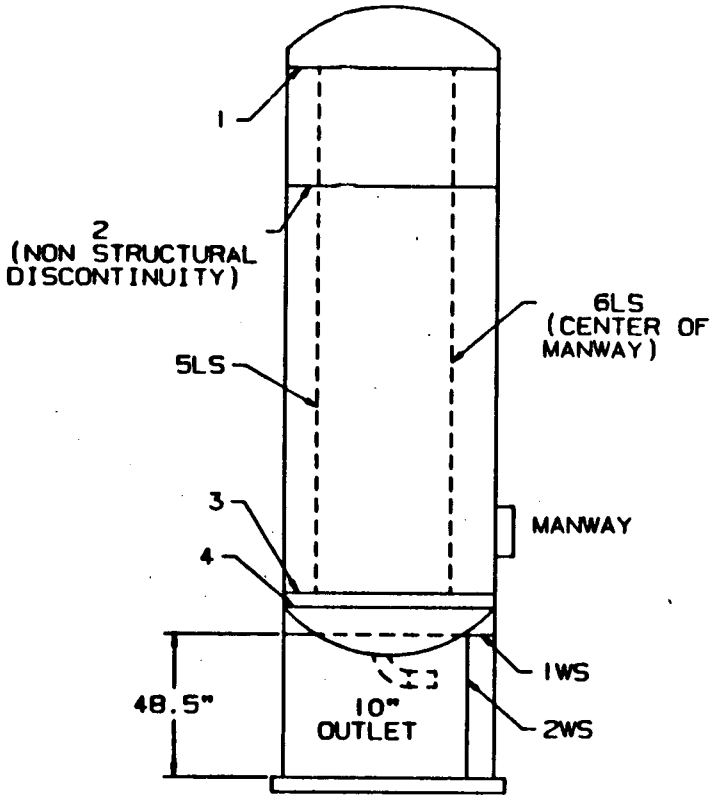

NOTE: WELD IDENTIFICATION PRECEDED BY ACCUMULATOR TANK 31,32,33 OR 34 AS APPLICABLE.

WELDS 1,2,3 & 4: HEAD 2.6"T(AVERAGE);SHELL 2.4"T (AVERAGE)
SA516 GRADE 70 CARBON STEEL WITH 5/32"T
SA240 TP304 STAINLESS STEEL CLADDING.
DIAMETER: 120.0";CIRCUMFERENCE: 376.80"
NOZZLE IN VESSEL WELDS: NOT APPLICABLE
INTEGRALLY WELDED ATTACHMENTS: 1WS & 2WS - 0.375"T SA283 CARBON STEEL
COMPNOENT SUPPORTS: WELDED SUPPORTS-1WS & 2WS
MANWAY BOLTING: 20-1.5" DIAMETER
0 REFERENCE: CENTERLINE OF MANWAY

NEW YORK POWER AUTHORITY INDIAN POINT UNIT NO.3	
ACCUMULATOR TANKS INTSIATAT1-31, INTSIATAT2-32, INTSIATAT3-33 & INTSIATAT4-34	
INT-2-1210	REV. 1

BORON INJECTION TANK
INTSIATSI

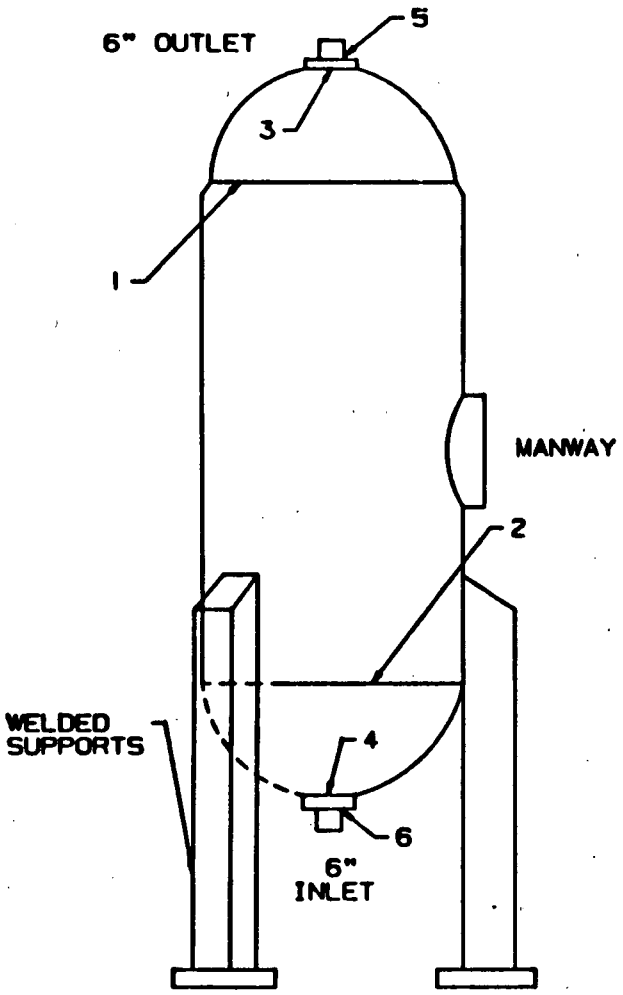

NOZZLE

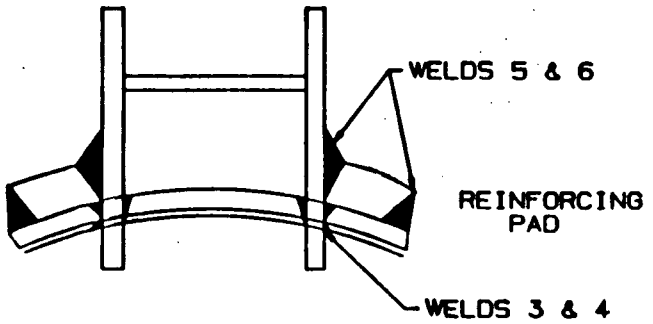

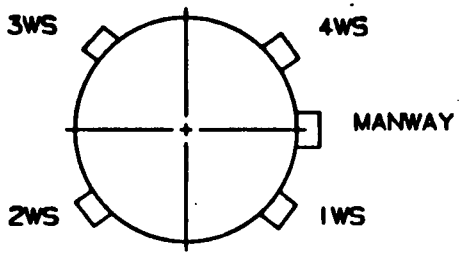

WELDS 1 & 2: HEAD 1.60"T;SHELL 2.6875"T SA516 GRADE 70 CARBON STEEL
WITH 5/32"T SA240 TP304 STAINLESS STEEL CLADDING
DIAMETER: 53.4";CIRCUMFERENCE: 167.60"
NOZZLE IN VESSEL WELDS 3 & 4: 6" DIAMETER 1.25"T MIN.
SA516 GRADE 70 CARBON STEEL WITH 5/32"T
SA240 TP304 STAINLESS STEEL CLADDING
(INACCESSIBLE DUE TO REINFORCING PAD)
REINFORCING PAD WELDS 5 & 6: 11.75" DIAMETER: 1.45"T
SA516 GRADE 70 CARBON STEEL
INTEGRALLY WELDED ATTACHMENTS: 4- 0.50"T
COMPONENT SUPPORTS: WELDED ATTACHMENTS-1WS,2WS,3WS & 4WS
MANWAY BOLTING: 20-1.5" DIAMETER
0 REFERENCE : CENTERLINE OF MANWAY

NEW YORK POWER AUTHORITY INDIAN POINT UNIT NO.3	
BORON INJECTION TANK INTSIATSI	
INT-2-1220	REV. 1

WELDS 31-1,31-2,32-1 & 32-1: 0.875"T TP304 STAINLESS STEEL
DIAMETER:10.75";CIRCUMFERENCE:33.75"
NOZZLE IN VESSEL WELDS: 2" DIAMETER
INTEGRALLY WELDED ATTACHMENTS: 3-0.375"T
COMPONENT SUPPORTS:3 WELDED ATTACHMENTS
BOLTING: 16-1.25": DIAMETER
0 REFERENCE: CENTERLINE OF 2" INLET NOZZLE

SEAL WATER INJECTION FILTER
CSFLS1-31

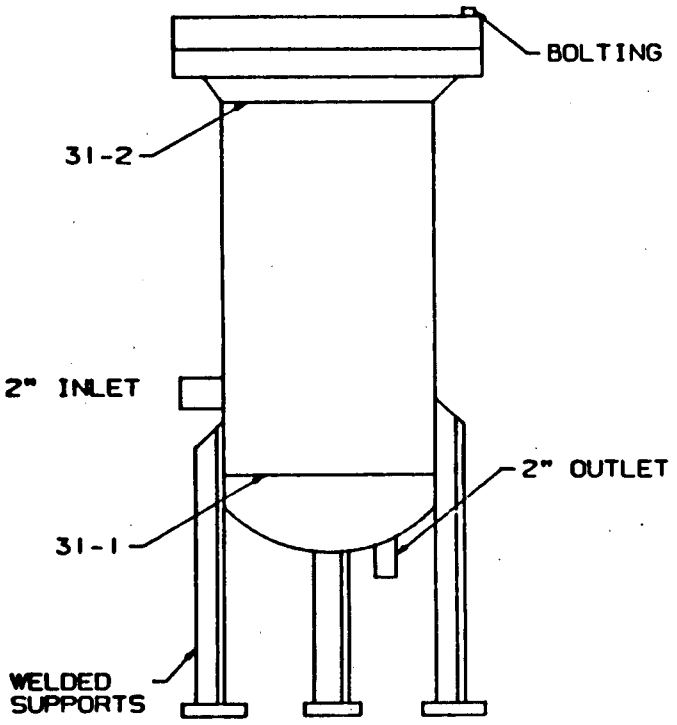

SEAL WATER INJECTION FILTER
CSFLS1-32

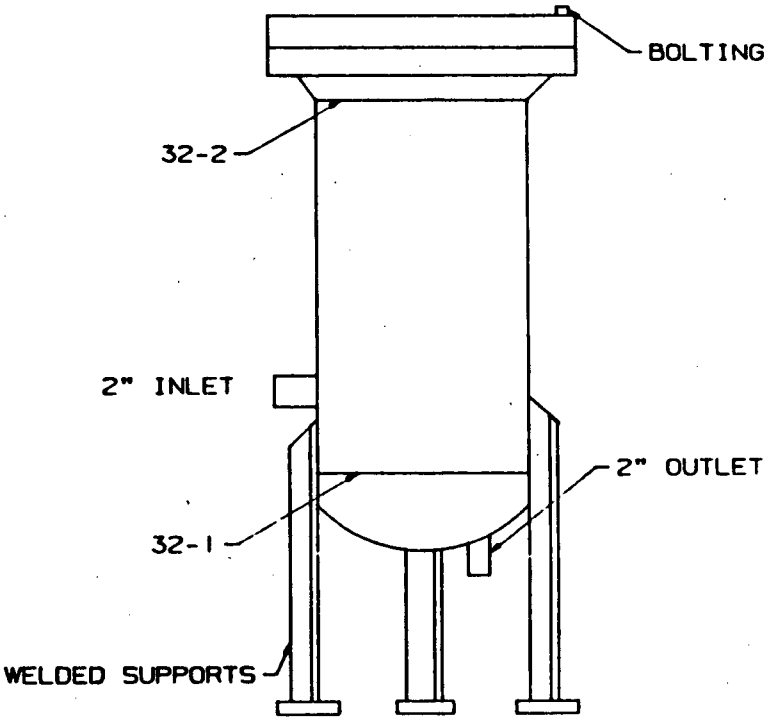

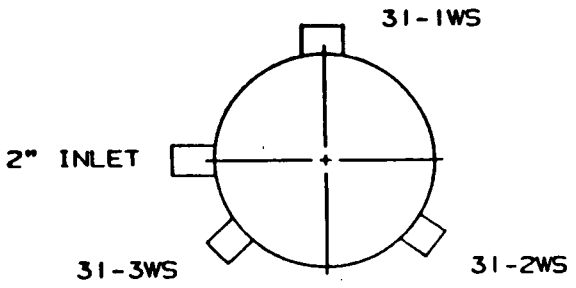

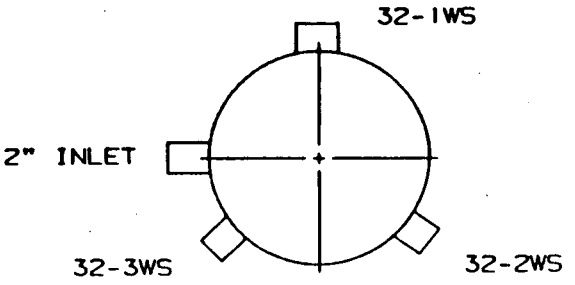

NEW YORK POWER AUTHORITY INDIAN POINT UNIT NO.3	
SEAL WATER INJECTION FILTERS CSFLS1-31 & CSFLS1-32	
INT-2-1300	REV. 2

REACTOR COOLANT FILTER
CSFLRC1-31

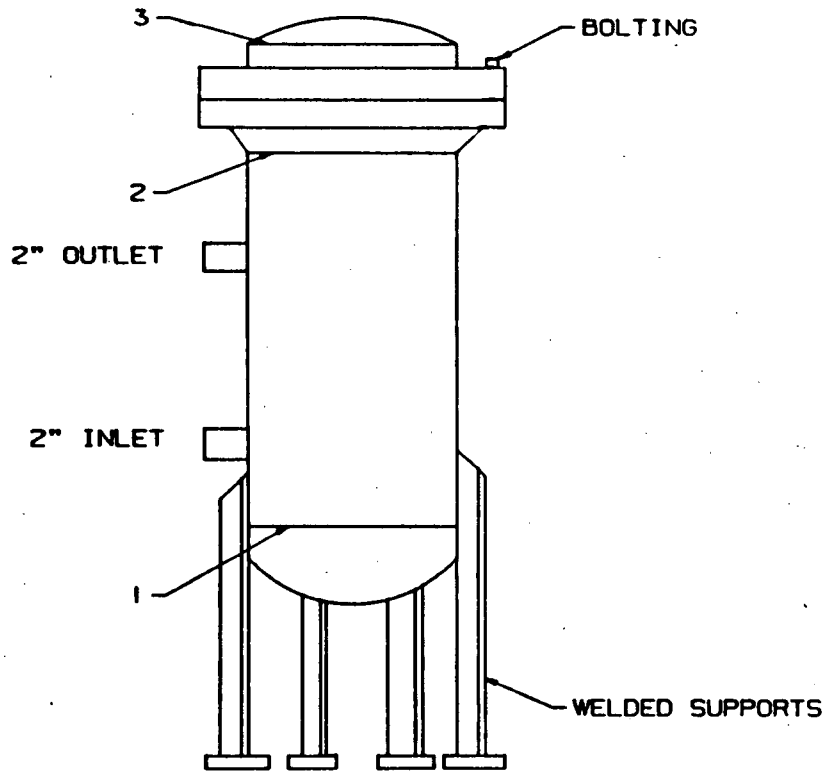

WELDS 1,2 & 3: 0.250"T TP304 STAINLESS STEEL
DIAMETER 14.0";CIRUMFERENCE:43.96"
NOZZLE IN VESSEL WELDS: 2" DIAMETER
INTEGRALLY WELDED ATTACHMENTS: 4-0.250"T
COMPONENT SUPPORTS:4 WELDED ATTACHMENTS
BOLTING: 12-0.625" DIAMETER
0 REFERENCE: CENTERLINE OF 2" INLET NOZZLE

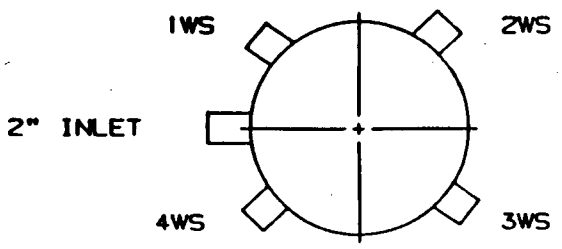

NEW YORK POWER AUTHORITY INDIAN POINT UNIT NO.3	
REACTOR COOLANT FILTER CSFLRC1-31	
INT-2-1310	REV. 2

SEAL WATER RETURN FILTER
CSFLSW1-31

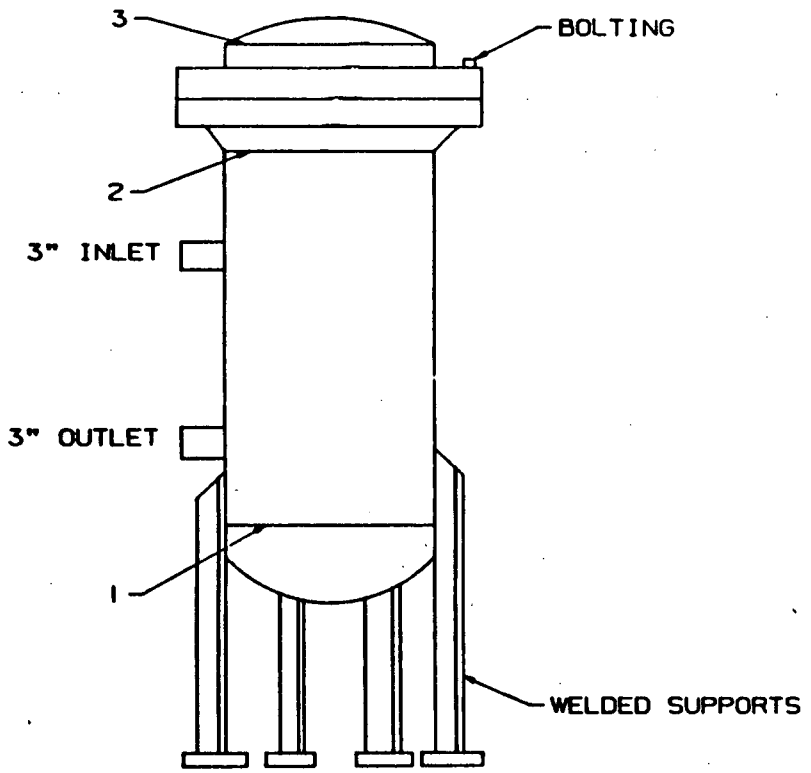

WELDS 1,2 & 3: 0.188"T TP304 STAINLESS STEEL
DIAMETER 16.0";CIRUMFERENCE:50.24"
NOZZLE IN VESSEL WELDS: 3" DIAMETER
INTEGRALLY WELDED ATTACHMENTS: 4-0.4375"T
COMPONENT SUPPORTS:4 WELDED ATTACHMENTS
BOLTING: 8-0.750" DIAMETER
0 REFERENCE: CENTERLINE OF 3" INLET NOZZLE

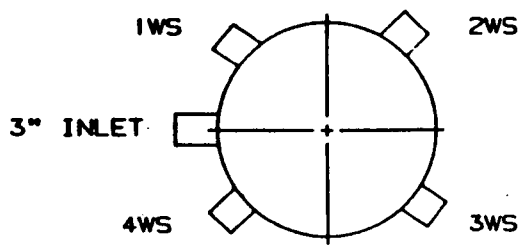

NEW YORK POWER AUTHORITY INDIAN POINT UNIT NO.3	
SEAL WATER RETURN FILTER CSFLSW1-31	
INT-2-1320	REV. 2

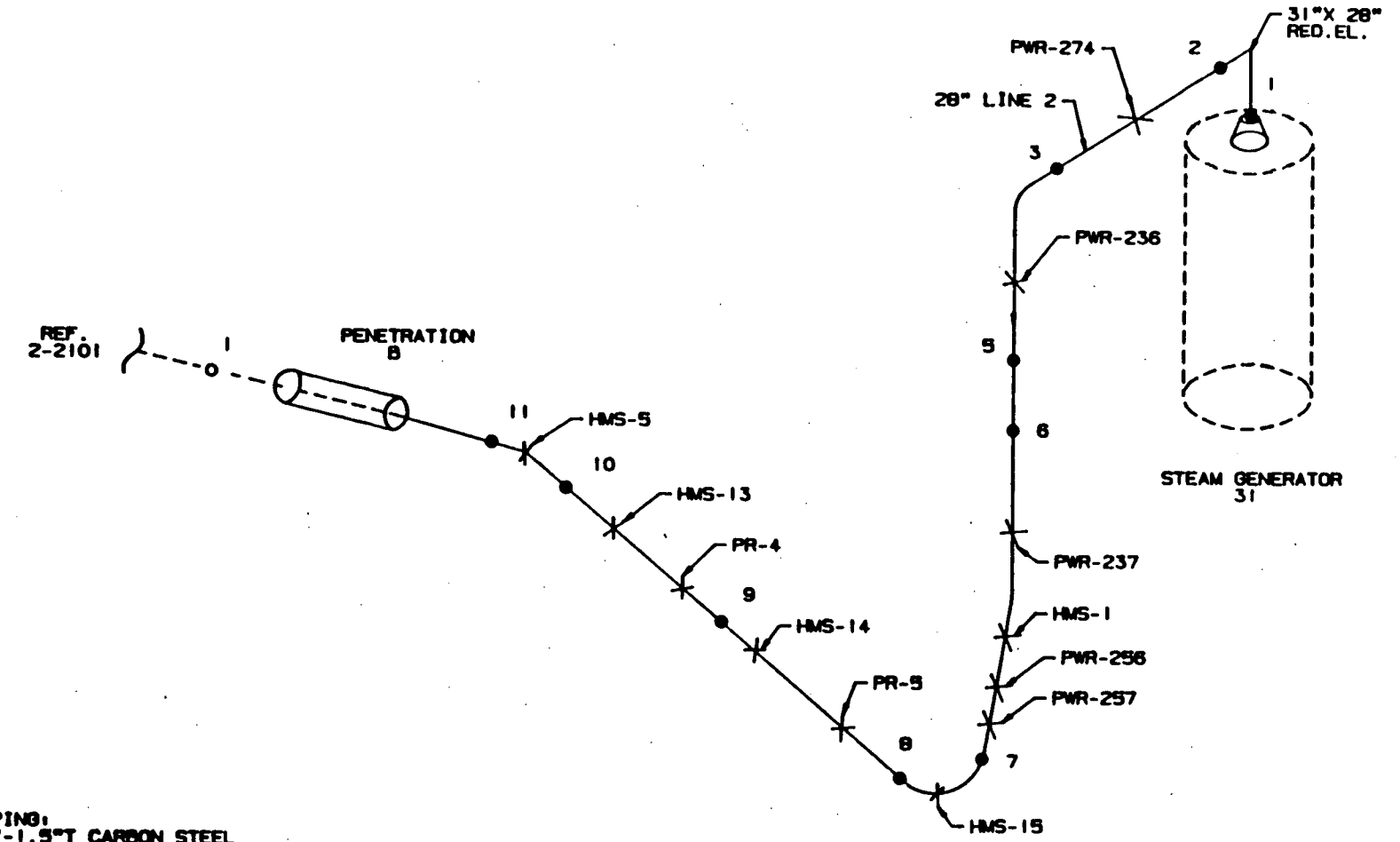

PIPING:
31"-1.5"T CARBON STEEL
28"-1.0"T CARBON STEEL

INTEGRALLY WELDED ATTACHMENTS:
HMS-1:
PR-4:2.0"T
PR-5:2.0"T
HMS-5:1.0"T
HMS-13:1.0"T
HMS-14:1.0"T
HMS-15:1.0"T

NOTE:WELDS 1 & 5 REPLACED 1989.
WELD 4 DELETED 1989.

NEW YORK POWER AUTHORITY INDIAN POINT UNIT NO.3	
LOOP 31 31" & 28" LINE 2 MAINSTEAM	
INT-2-2100	REV. 3

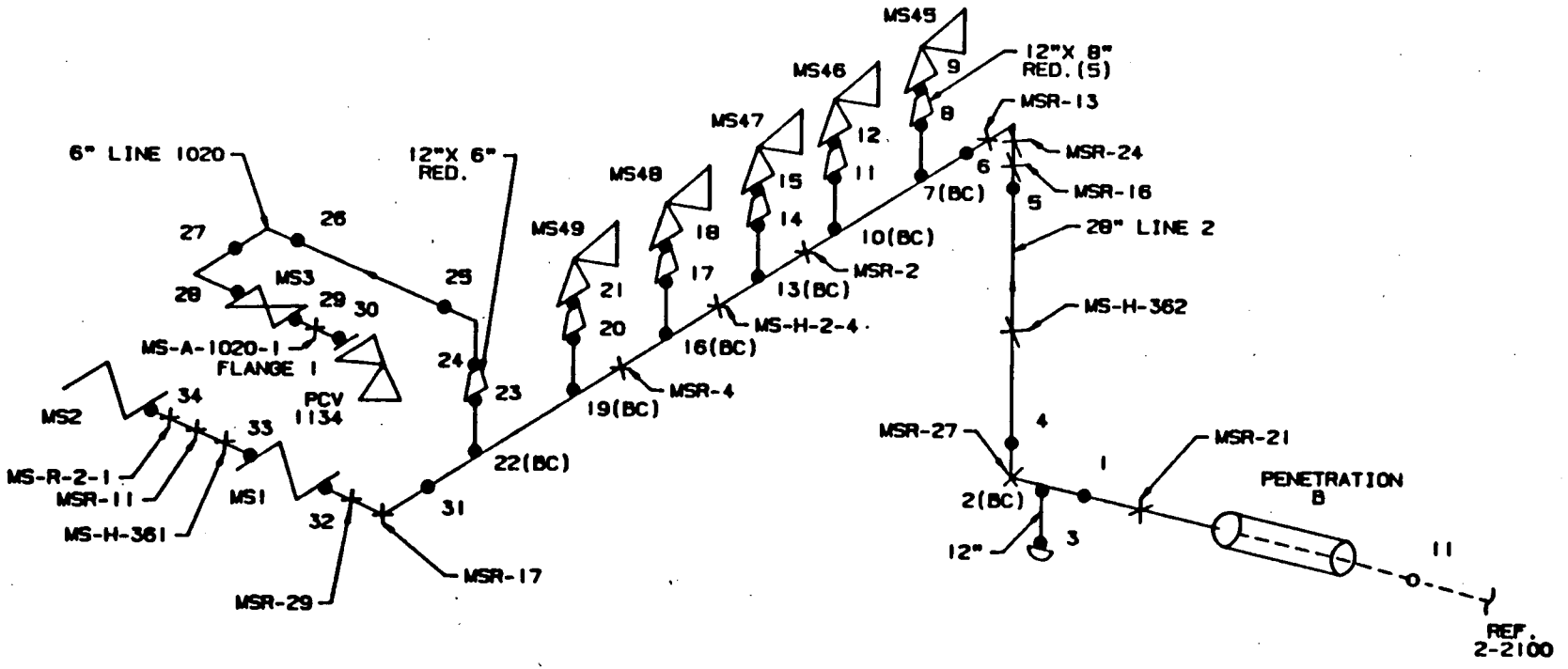

PIPING:
28"-1.0"T CARBON STEEL
12" SCH 80 0.688"T CARBON STEEL
8" SCH 160 0.906"T CARBON STEEL
6" SCH 80 0.432"T CARBON STEEL

FLANGE BOLTING:
FLANGE 1:12 STUDS & 24 NUTS-1.00" DIAMETER

VALVE BONNET BOLTING:
MS1:24 STUDS & 24 NUTS-1.750" DIAMETER
MS2:24 STUDS & 24 NUTS-1.750" DIAMETER
MS3: 8 STUDS & 8 NUTS-0.875" DIAMETER
MS45:6 STUDS & 6 NUTS-1.125" DIAMETER
MS46:6 STUDS & 6 NUTS-1.125" DIAMETER
MS47:6 STUDS & 6 NUTS-1.125" DIAMETER
MS48:6 STUDS & 6 NUTS-1.125" DIAMETER
MS49:6 STUDS & 6 NUTS-1.125" DIAMETER
PCV1134:8 STUDS & 8 NUTS-1.125" DIAMETER

INTEGRALLY WELDED ATTACHMENTS:
MSR-2:1.0"T
MSR-4:1.0"T
MSR-11:1.0"T
MSR-13:1.0"T
MSR-16:1.0"T
MSR-17:1.125"T
MSR-21:1.0"T
MSR-24:1.0"T
MSR-27:1.0"T
MSR-29:1.0"T
MS-R-2-1:1.125"T
MS-A-1020-1:0.50"T

VALVE MANUFACTURER:
MS1 & MS2:ATWOOD & MORRILL
MS3:CRANE
MS45,MS46,MS47,MS48 & MS49:CROSBY ASHTON
PCV1134:COPES VULCAN

NEW YORK POWER AUTHORITY
INDIAN POINT UNIT NO.3

LOOP 31
28",12" & 8"
LINE 2 MAINSTEAM &
6" LINE 1020 MAINSTEAM

INT-2-2101

REV.
3

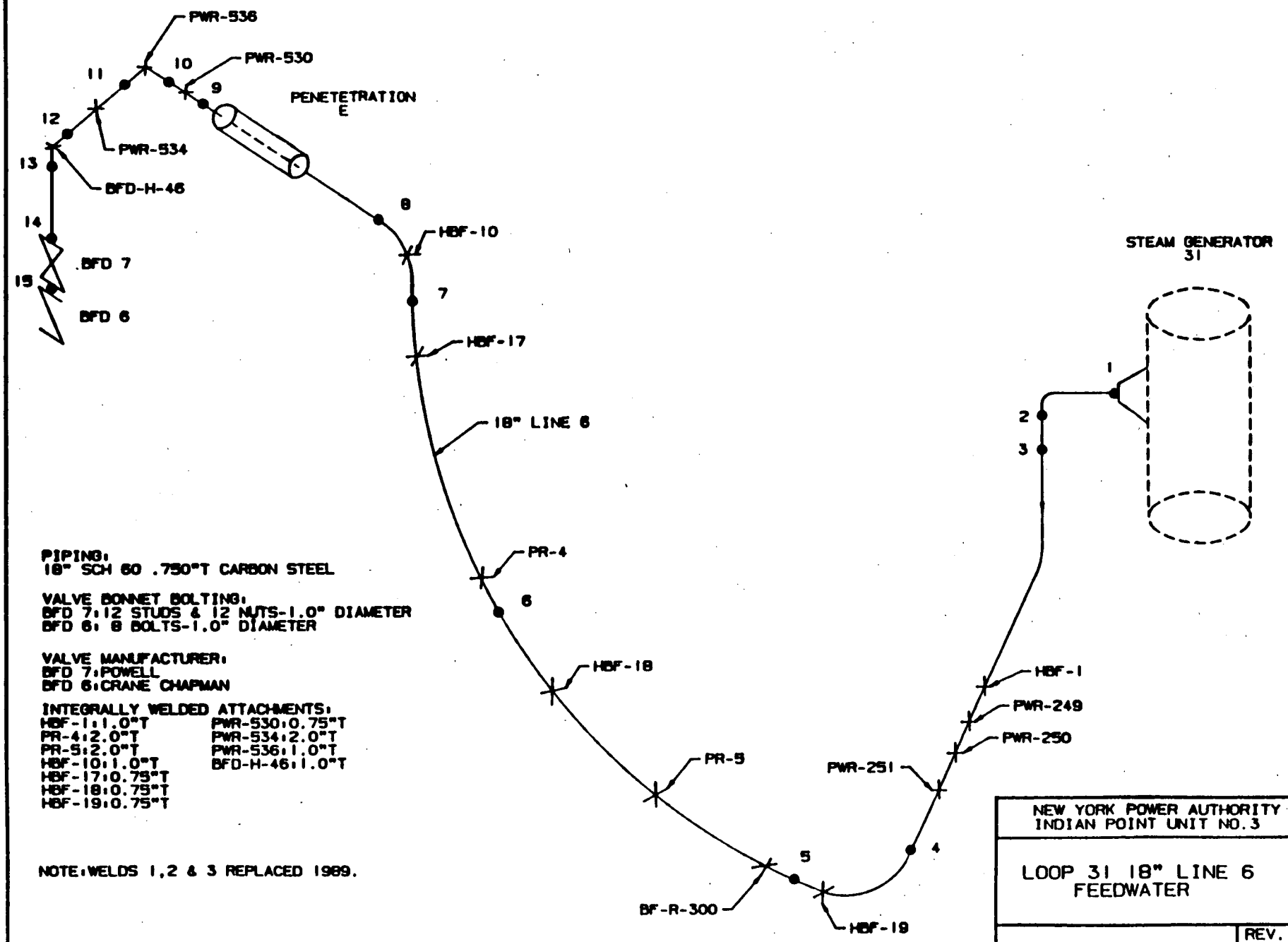

PIPING:
18" SCH 60 .750"T CARBON STEEL

VALVE BONNET BOLTING:
BFD 7:12 STUDS & 12 NUTS-1.0" DIAMETER
BFD 6: 8 BOLTS-1.0" DIAMETER

VALVE MANUFACTURER:
BFD 7:POWELL
BFD 6:CRANE CHAPMAN

INTEGRALLY WELDED ATTACHMENTS:

HBF-1:1.0"T	PWR-530:0.75"T
PR-4:2.0"T	PWR-534:2.0"T
PR-5:2.0"T	PWR-536:1.0"T
HBF-10:1.0"T	BFD-H-46:1.0"T
HBF-17:0.75"T	
HBF-18:0.75"T	
HBF-19:0.75"T	

NOTE:WELDS 1,2 & 3 REPLACED 1989.

NEW YORK POWER AUTHORITY
INDIAN POINT UNIT NO.3

LOOP 31 18" LINE 6
FEEDWATER

INT-2-2102

REV. 3

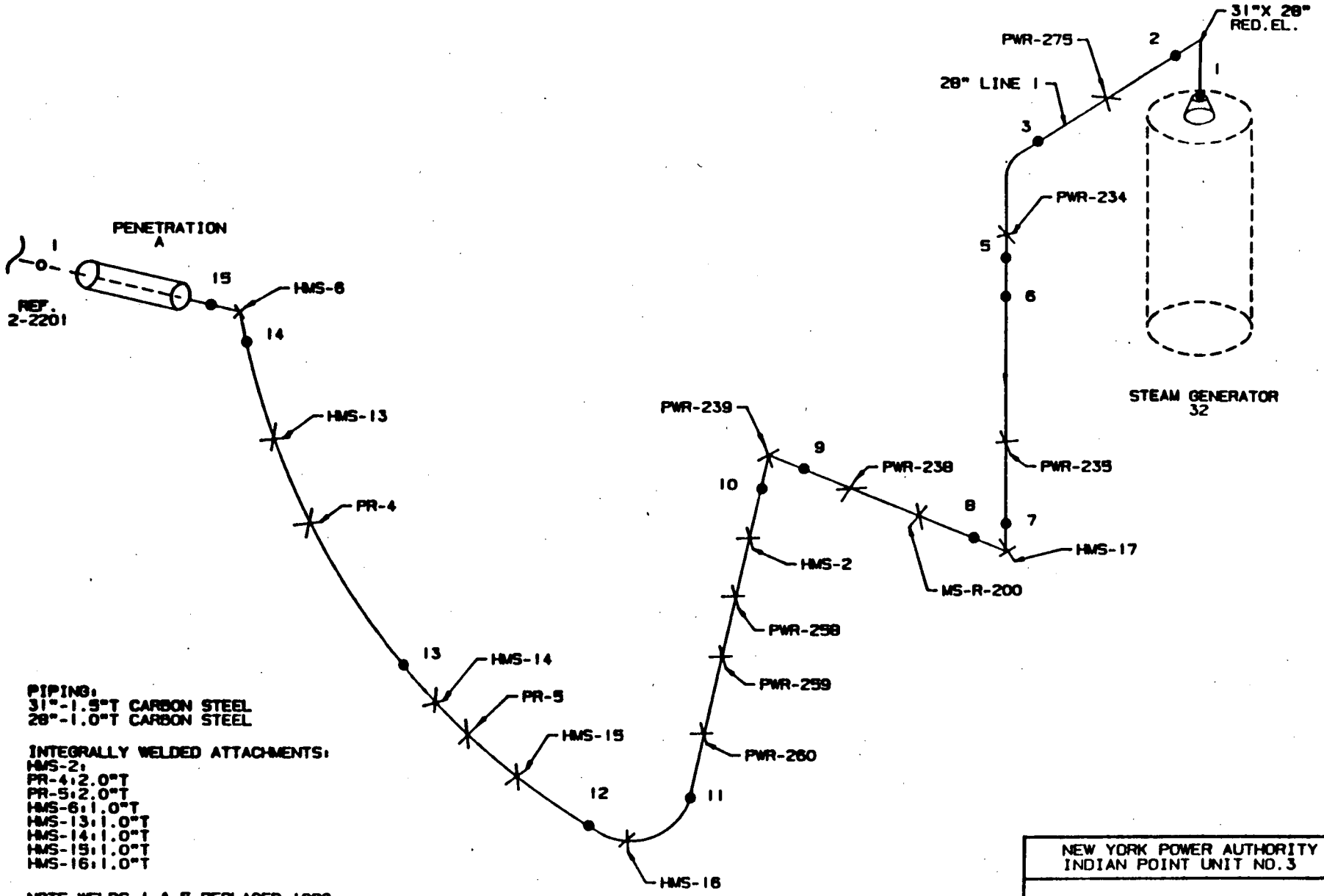

PIPING:
31"-1.5"T CARBON STEEL
28"-1.0"T CARBON STEEL

INTEGRALLY WELDED ATTACHMENTS:
HMS-2:
PR-4:2.0"T
PR-5:2.0"T
HMS-6:1.0"T
HMS-13:1.0"T
HMS-14:1.0"T
HMS-15:1.0"T
HMS-16:1.0"T

NOTE:WELDS 1 & 5 REPLACED 1989.
WELD 4 DELETED 1989.

NEW YORK POWER AUTHORITY INDIAN POINT UNIT NO.3	
LOOP 32 31" & 28" LINE 1 MAINSTEAM	
INT-2-2200	REV. 3

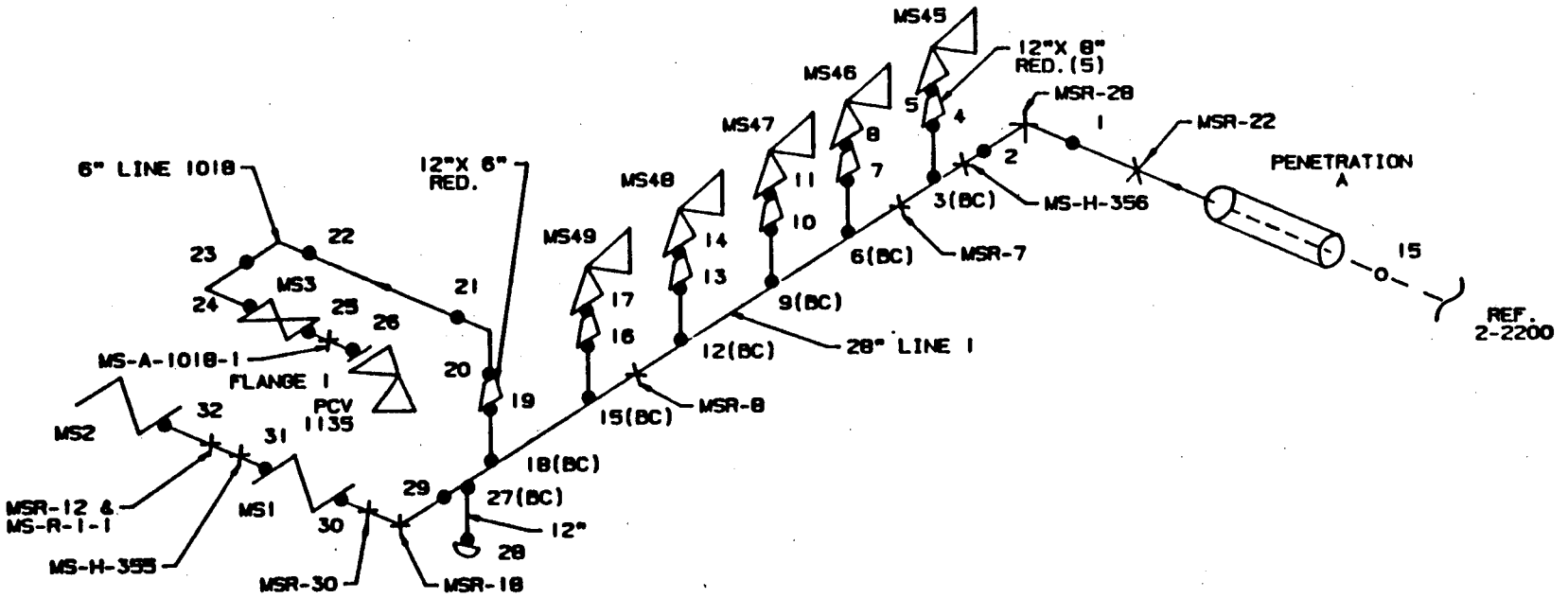

PIPING:
28"-1.0"T CARBON STEEL
12" SCH 80 0.688"T CARBON STEEL
8" SCH 160 0.906"T CARBON STEEL
6" SCH 80 0.432"T CARBON STEEL

VALVE BONNET BOLTING:
MS1:24 STUDS & 24 NUTS-1.750" DIAMETER
MS2:24 STUDS & 24 NUTS-1.750" DIAMETER
MS3: 8 STUDS & 8 NUTS-0.875" DIAMETER
MS45:6 STUDS & 6 NUTS-1.125" DIAMETER
MS46:6 STUDS & 6 NUTS-1.125" DIAMETER
MS47:6 STUDS & 6 NUTS-1.125" DIAMETER
MS48:6 STUDS & 6 NUTS-1.125" DIAMETER
MS49:6 STUDS & 6 NUTS-1.125" DIAMETER
PCV1135:8 STUDS & 8 NUTS-1.125" DIAMETER

VALVE MANUFACTURER:
MS1 & MS2:ATWOOD & MORRILL
MS3:CRANE
MS45,MS46,MS47,MS48 & MS49:CROSBY ASHTON
PCV1135:COPES VULCAN

FLANGE BOLTING:
FLANGE 1:12 STUDS & 24 NUTS-1.00" DIAMETER

INTEGRALLY WELDED ATTACHMENTS:
MSR-28:
MSR-18:
MS-R-1-1:

NEW YORK POWER AUTHORITY INDIAN POINT UNIT NO.3	
LOOP 32 28", 12" & 8" LINE 1 MAINSTEAM & 6" LINE 1018 MAINSTEAM	
INT-2-2201	REV. 3

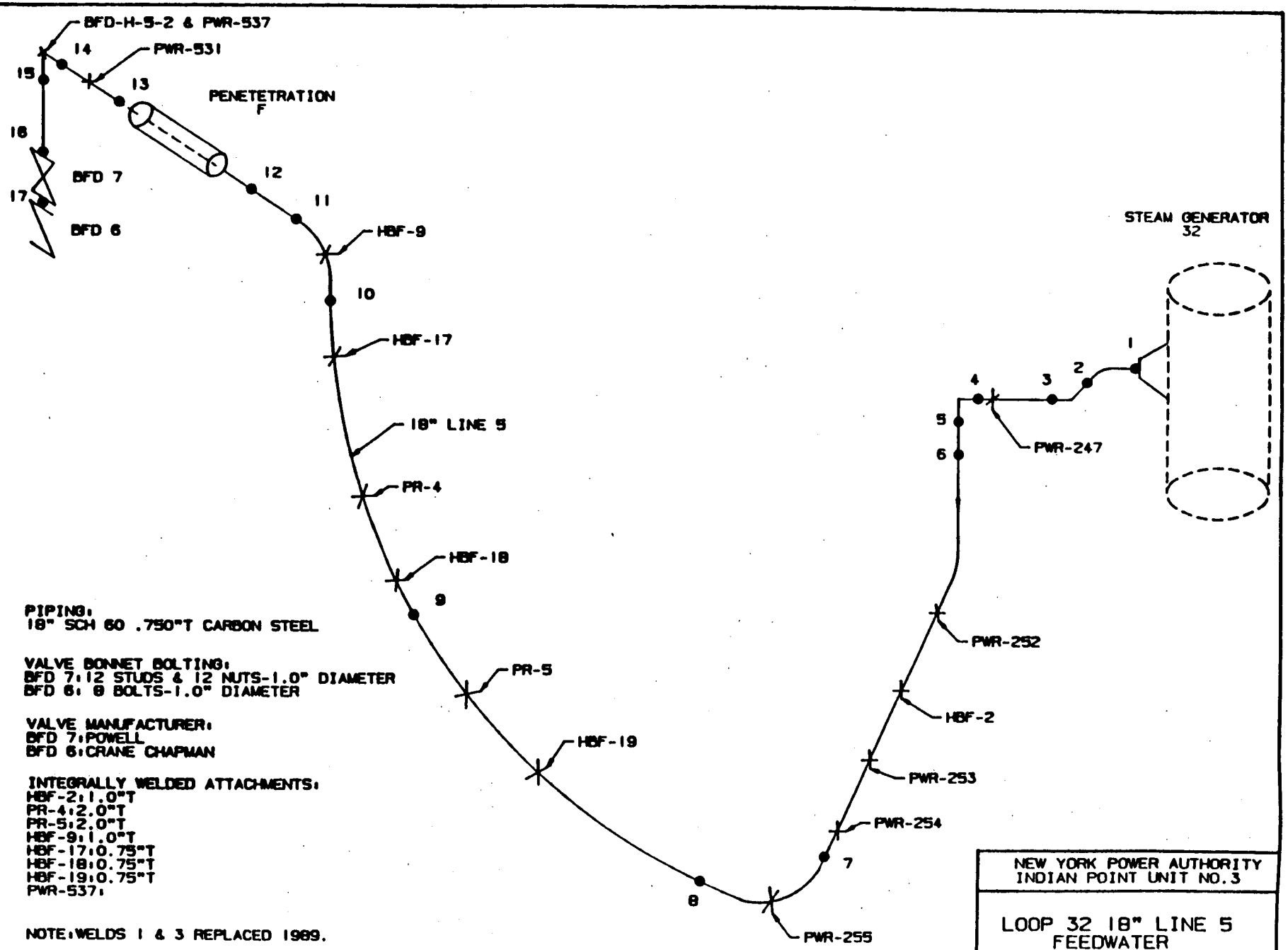

PIPING:
18" SCH 60 .750"T CARBON STEEL

VALVE BONNET BOLTING:
BFD 7:12 STUDS & 12 NUTS-1.0" DIAMETER
BFD 6: 8 BOLTS-1.0" DIAMETER

VALVE MANUFACTURER:
BFD 7:POWELL
BFD 6:CRANE CHAPMAN

INTEGRALLY WELDED ATTACHMENTS:
HBF-2:1.0"T
PR-4:2.0"T
PR-5:2.0"T
HBF-9:1.0"T
HBF-17:0.75"T
HBF-18:0.75"T
HBF-19:0.75"T
PWR-537:

NOTE:WELDS 1 & 3 REPLACED 1989.

NEW YORK POWER AUTHORITY INDIAN POINT UNIT NO.3	
LOOP 32 18" LINE 5 FEEDWATER	
INT-2-2202	REV. 3

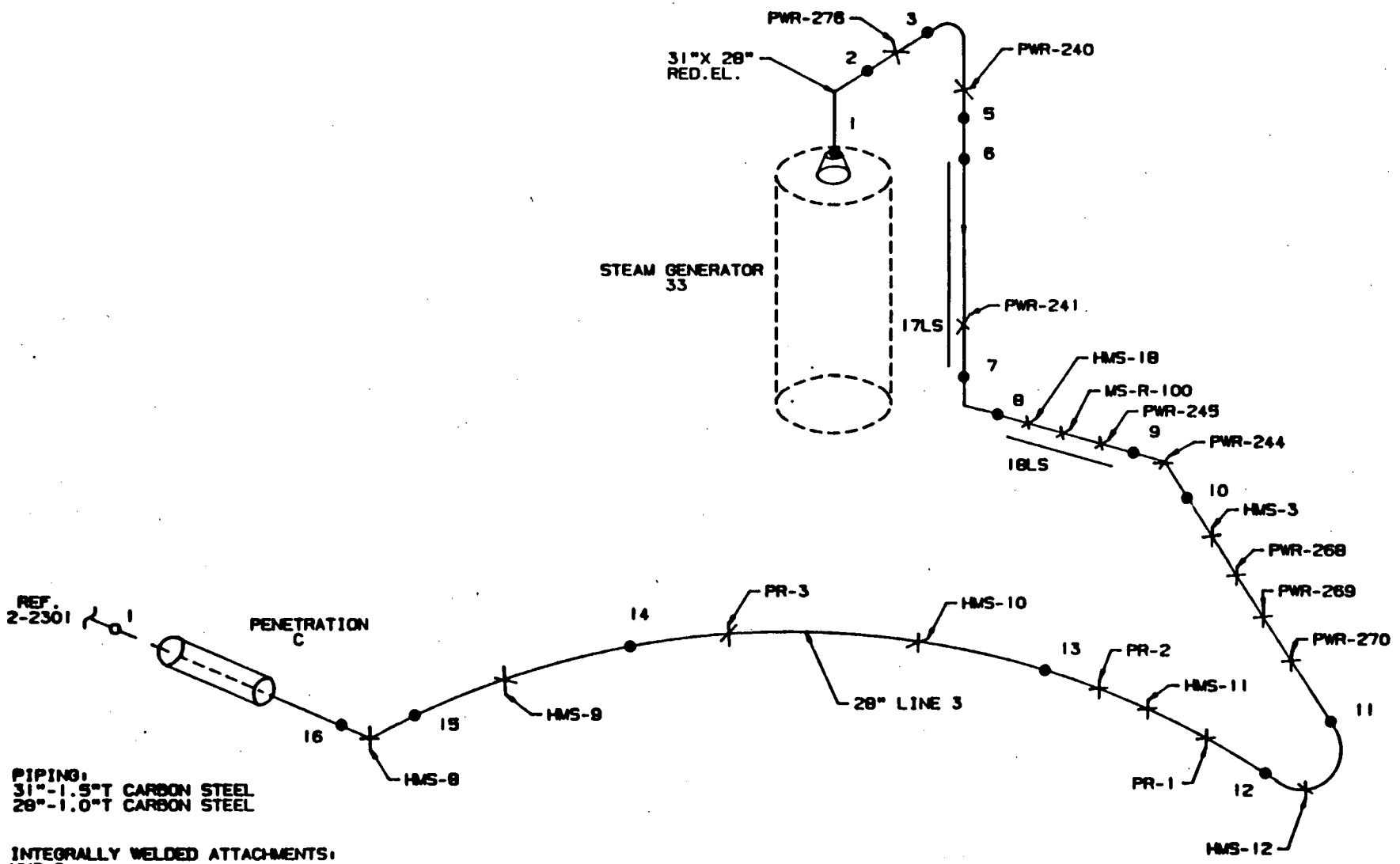

PIPING:
31"-1.5"T CARBON STEEL
28"-1.0"T CARBON STEEL

INTEGRALLY WELDED ATTACHMENTS:
HMS-3:
PR-1:2.0"T
PR-2:2.0"T
PR-3:2.0"T
HMS-8:1.0"T
HMS-9:1.0"T
HMS-10:1.0"T
HMS-11:1.0"T
HMS-12:1.0"T

NOTE:WELDS 1 & 5 REPLACED 1989.
WELD 4 DELETED 1989.

NEW YORK POWER AUTHORITY INDIAN POINT UNIT NO.3	
LOOP 33 31" & 28" LINE 3 MAINSTEAM	
INT-2-2300	REV. 5

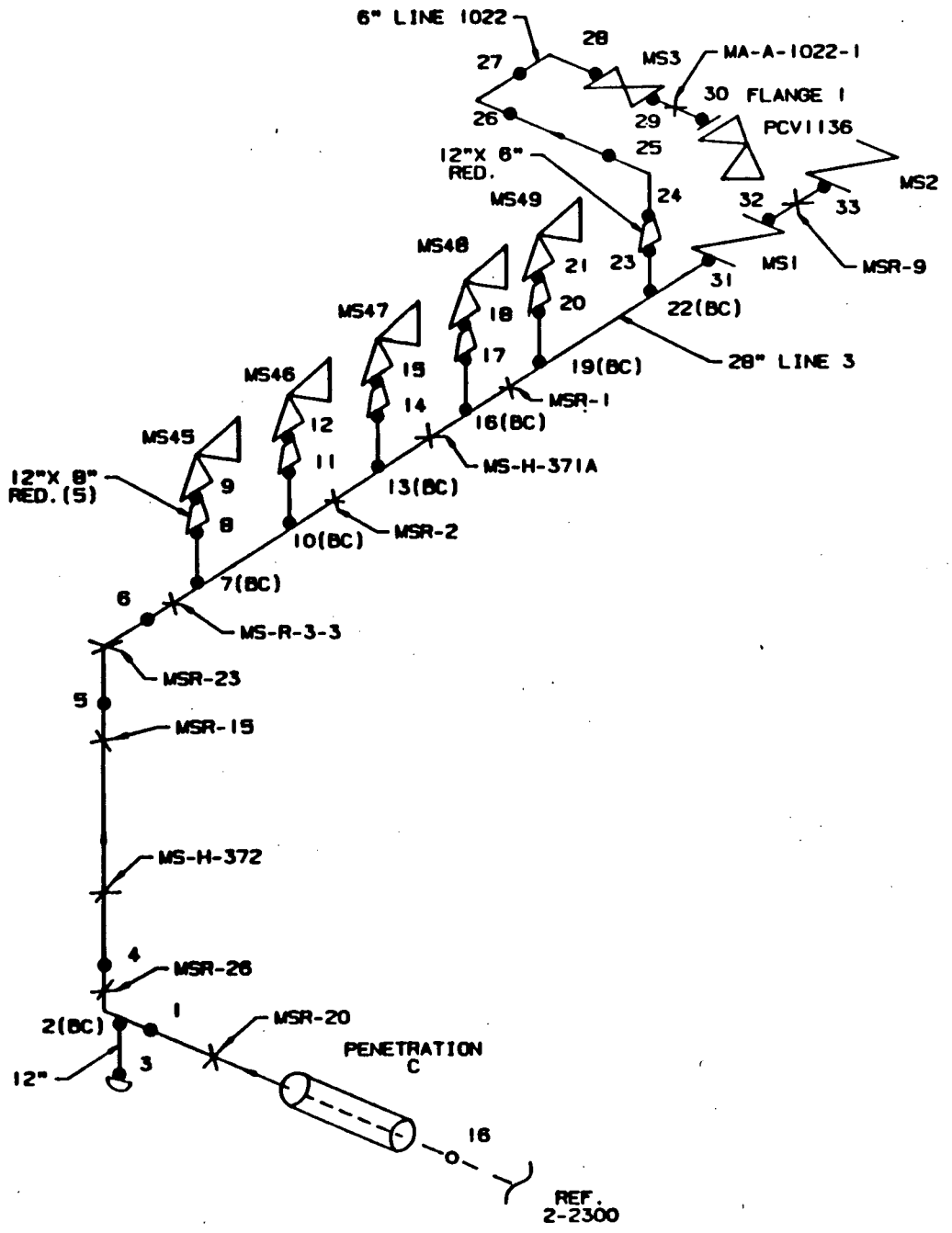

PIPING:
28"-1.0"T CARBON STEEL
12" SCH 80 0.688"T CARBON STEEL
8" SCH 160 0.906"T CARBON STEEL
6" SCH 80 0.432"T CARBON STEEL

VALVE BONNET BOLTING:
MS1:24 STUDS & 24 NUTS-1.750" DIAMETER
MS2:24 STUDS & 24 NUTS-1.750" DIAMETER
MS3: 8 STUDS & 8 NUTS-0.875" DIAMETER
MS45:6 STUDS & 6 NUTS-1.125" DIAMETER
MS46:6 STUDS & 6 NUTS-1.125" DIAMETER
MS47:6 STUDS & 6 NUTS-1.125" DIAMETER
MS48:6 STUDS & 6 NUTS-1.125" DIAMETER
MS49:6 STUDS & 6 NUTS-1.125" DIAMETER
PCV1136:8 STUDS & 8 NUTS-1.125" DIAMETER

VALVE MANUFACTURER:
MS1 & MS2:ATWOOD & MORRILL
MS3:CRANE
MS45,MS46,MS47,MS48 & MS49:CROSBY ASHTON
PCV1136:COPES VULCAN

FLANGE BOLTING:
FLANGE 1:12 STUDS & 24 NUTS-1.00" DIAMETER

INTEGRALLY WELDED ATTACHMENTS:
MSR-15:
MSR-20:2.0"T
MSR-23:
MSR-26:

NEW YORK POWER AUTHORITY INDIAN POINT UNIT NO.3	
LOOP 33 28",12" & 8" LINE 3 MAINSTEAM & 6" LINE 1022 MAINSTEAM	
INT-2-2301	REV. 3

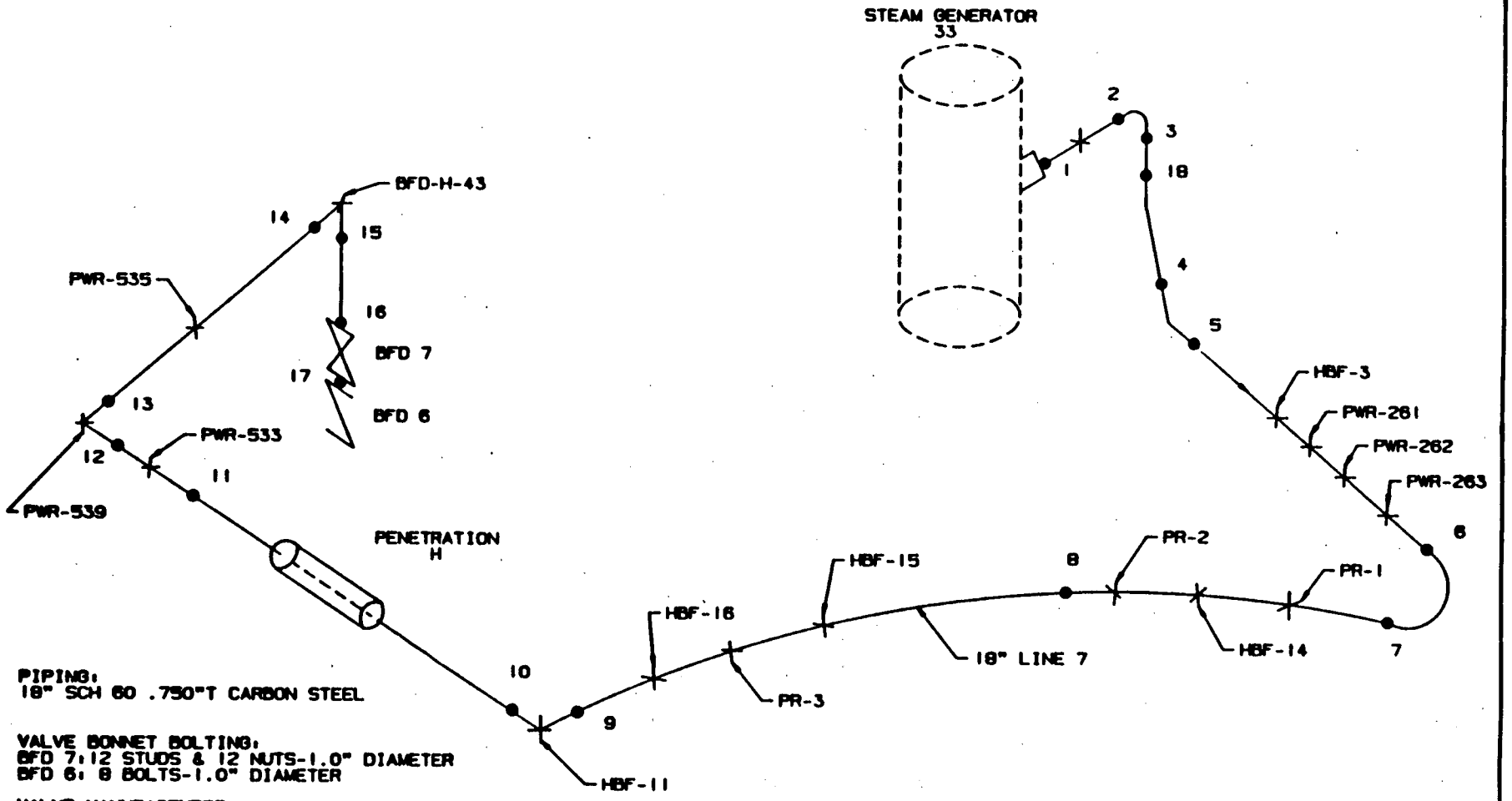

PIPING:
18" SCH 60 .750"T CARBON STEEL

VALVE BONNET BOLTING:
BFD 7:12 STUDS & 12 NUTS-1.0" DIAMETER
BFD 6: 8 BOLTS-1.0" DIAMETER

VALVE MANUFACTURER:
BFD 7:POWELL
BFD 6:CRANE CHAPMAN

INTEGRALLY WELDED ATTACHMENTS:
HBF-3:1.0"T
PR-1:2.0"T
PR-2:2.0"T
PR-3:2.0"T
HBF-11:1.0"T
HBF-14:0.75"T
HBF-15:0.75"T
HBF-16:0.75"T
PWR-539:
BFD-H-43:

NOTE:WELDS 1,2,3 & 18 REPLACED OR ADDED 1989.

NEW YORK POWER AUTHORITY INDIAN POINT UNIT NO.3	
LOOP 33 18" LINE 7 FEEDWATER	
INT-2-2302	REV. 3

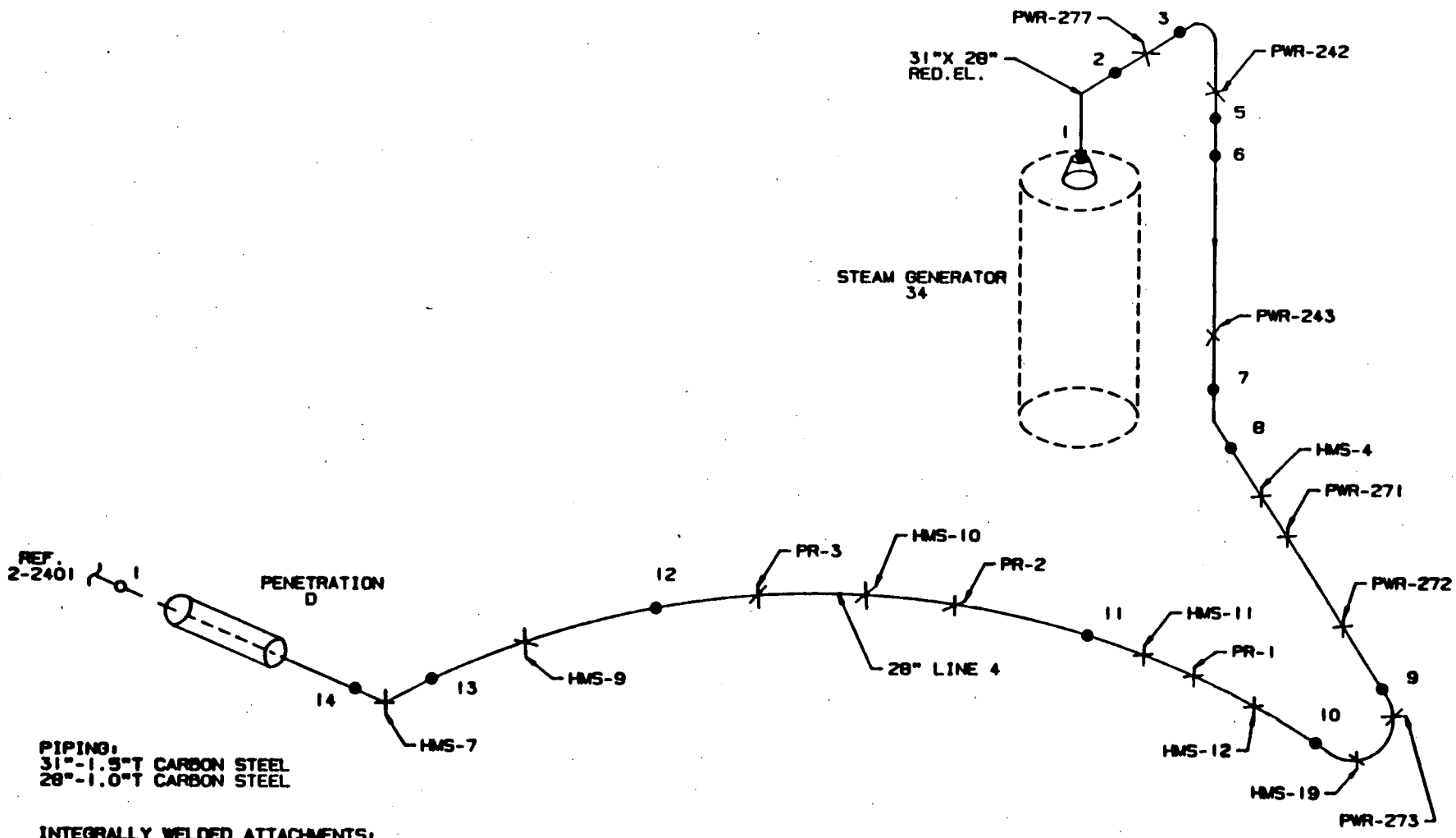

PIPING:
31"-1.5"T CARBON STEEL
28"-1.0"T CARBON STEEL

INTEGRALLY WELDED ATTACHMENTS:
HMS-4:
PR-1:2.0"T
PR-2:2.0"T
PR-3:2.0"T
HMS-7:1.0"T
HMS-9:1.0"T
HMS-10:1.0"T
HMS-11:1.0"T
HMS-12:1.0"T
HMS-19:1.0"T

NOTE: WELDS 1 & 5 REPLACED 1989.
WELD 4 DELETED 1989.

NEW YORK POWER AUTHORITY INDIAN POINT UNIT NO.3	
LOOP 34 31" & 28" LINE 4 MAINSTEAM	
INT-2-2400	REV. 3

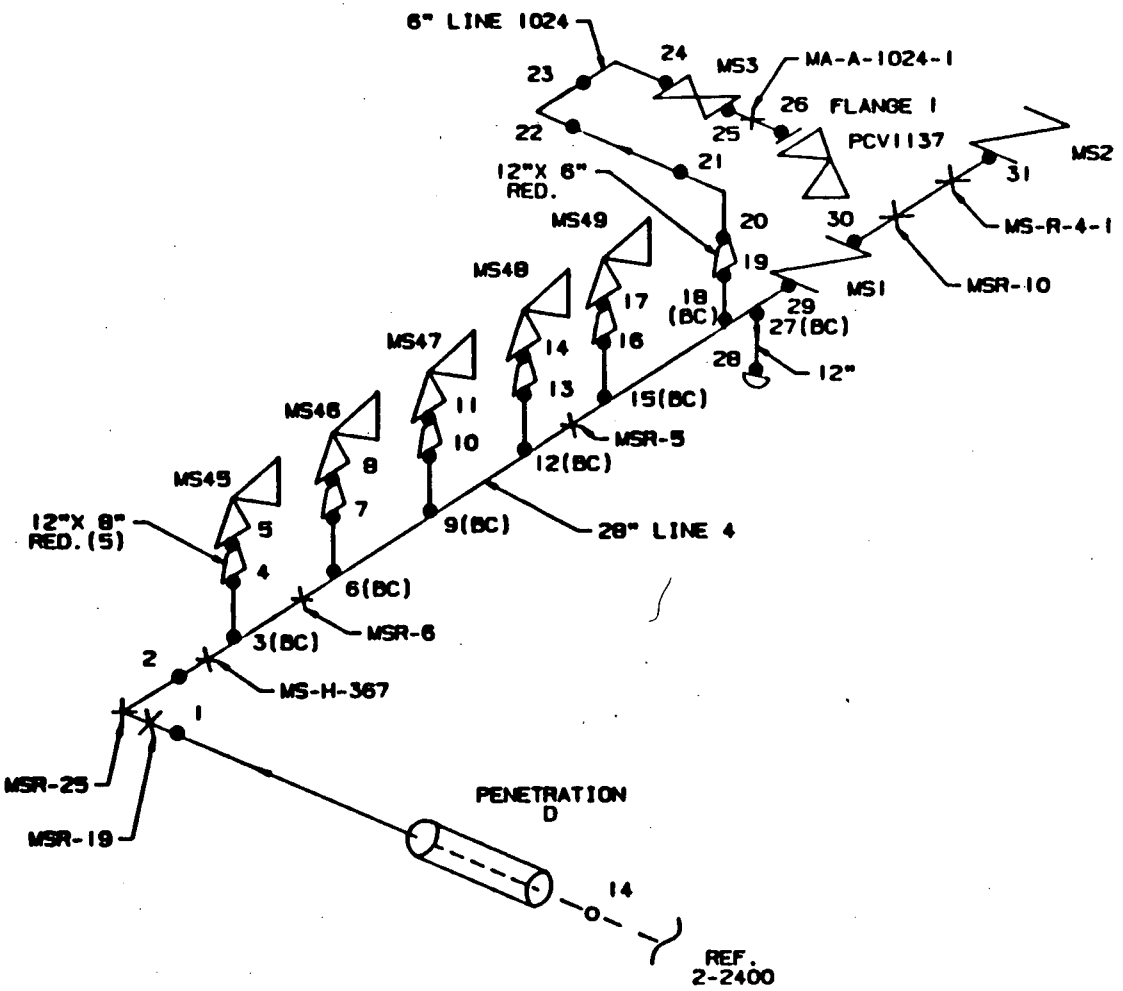

PIPING:
28"-1.0"T CARBON STEEL
12" SCH 80 0.688"T CARBON STEEL
8" SCH 160 0.906"T CARBON STEEL
6" SCH 80 0.432"T CARBON STEEL

VALVE BONNET BOLTING:
MS1:24 STUDS & 24 NUTS-1.750" DIAMETER
MS2:24 STUDS & 24 NUTS-1.750" DIAMETER
MS3: 8 STUDS & 8 NUTS-0.875" DIAMETER
MS45:6 STUDS & 6 NUTS-1.125" DIAMETER
MS46:6 STUDS & 6 NUTS-1.125" DIAMETER
MS47:6 STUDS & 6 NUTS-1.125" DIAMETER
MS48:6 STUDS & 6 NUTS-1.125" DIAMETER
MS49:6 STUDS & 6 NUTS-1.125" DIAMETER
PCV1137:8 STUDS & 8 NUTS-1.125" DIAMETER

VALVE MANUFACTURER:
MS1 & MS2:ATWOOD & MORRILL
MS3:CRANE
MS45,MS46,MS47,MS48 & MS49:CROSBY ASHTON
PCV1137:COPES VULCAN

FLANGE BOLTING:
FLANGE 1:12 STUDS & 24 NUTS-1.00" DIAMETER

INTEGRALLY WELDED ATTACHMENTS:
MSR-19:2.0"T
MSR-25:

NEW YORK POWER AUTHORITY INDIAN POINT UNIT NO.3	
LOOP 34 28",12" & 8" LINE 4 MAINSTEAM & 6" LINE 1024 MAINSTEAM	
INT-2-2401	REV. 3

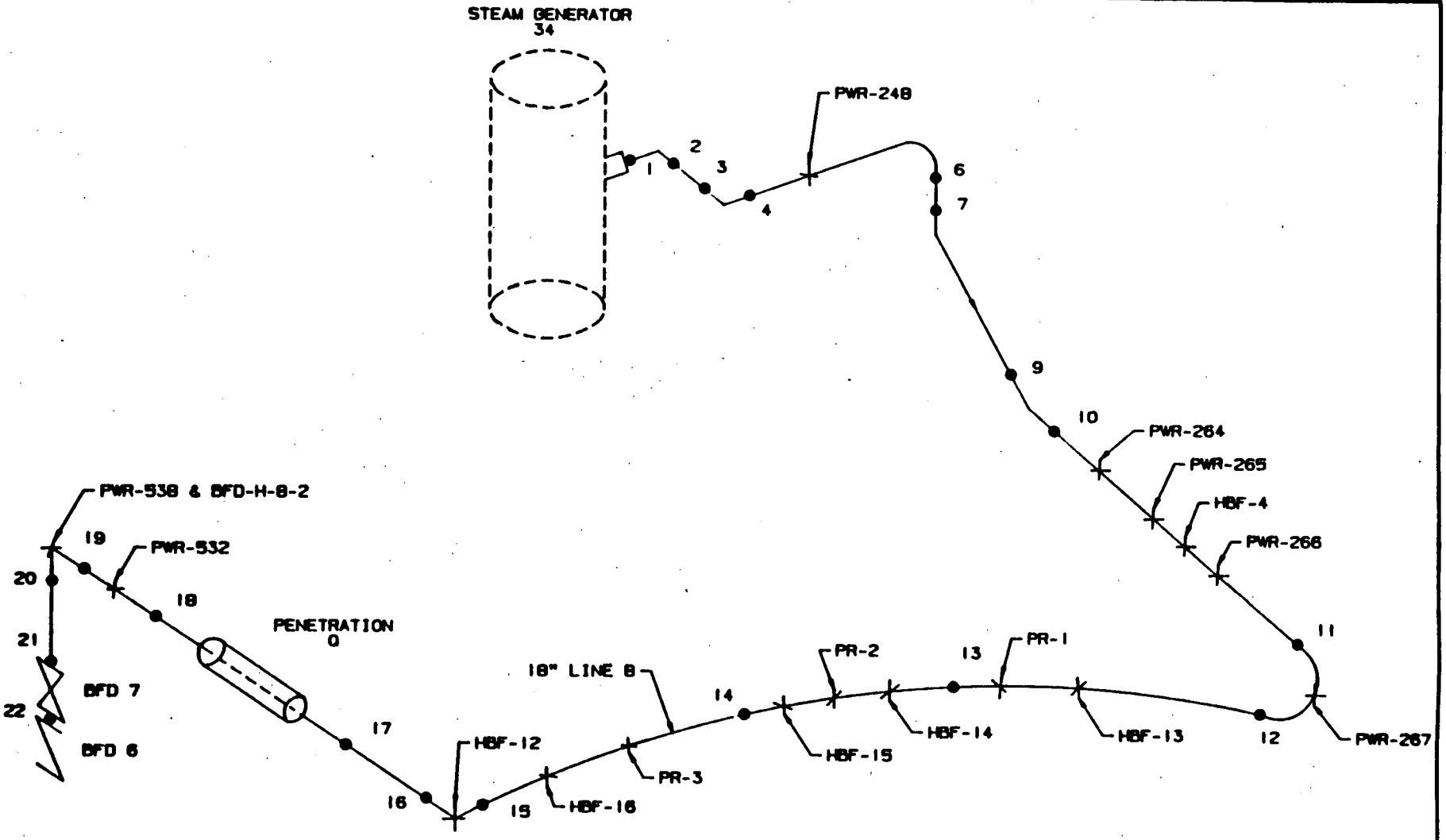

PIPING:
18" SCH 60 .750"T CARBON STEEL

VALVE BONNET BOLTING:
BFD 7:12 STUDS & 12 NUTS-1.0" DIAMETER
BFD 6: 8 BOLTS-1.0" DIAMETER

VALVE MANUFACTURER:
BFD 7:POWELL
BFD 6:CRANE CHAPMAN

INTEGRALLY WELDED ATTACHMENTS:
HBF-4:
PR-1:2.0"T
PR-2:2.0"T
PR-3:2.0"T
HBF-12:1.0"T
HBF-13:0.75"T
HBF-14:0.75"T
HBF-15:0.75"T
HBF-16:0.75"T
PWR-265:1.0"T
PWR-538:

NOTE:WELDS 1,2,3 AND 4 REPLACED 1989.
WELDS 5 & 8 DELETED 1989.

NEW YORK POWER AUTHORITY INDIAN POINT UNIT NO.3	
LOOP 34 18" LINE 8 FEEDWATER	
INT-2-2402	REV. 3

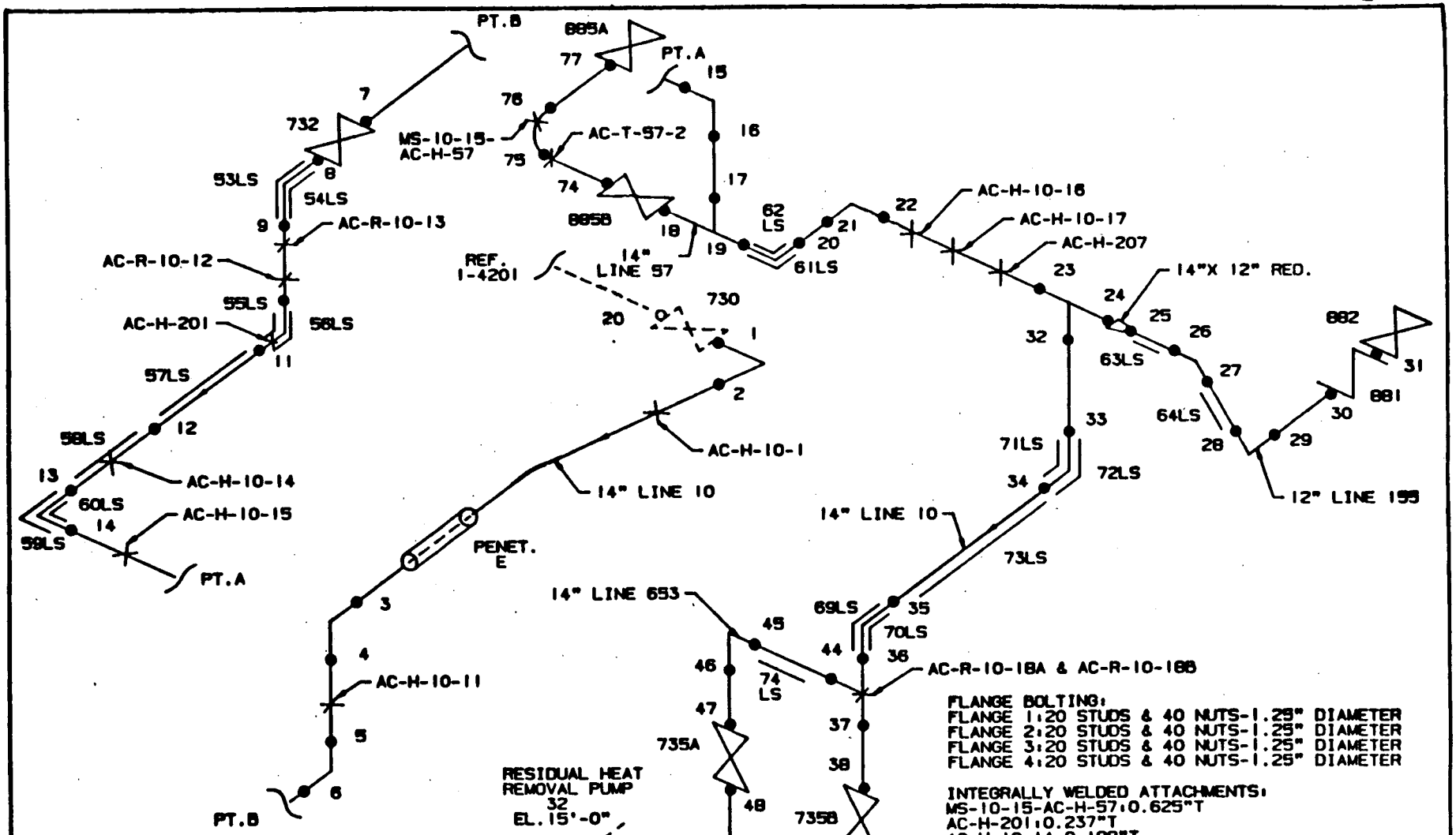

FLANGE BOLTING:
FLANGE 1:20 STUDS & 40 NUTS-1.25" DIAMETER
FLANGE 2:20 STUDS & 40 NUTS-1.25" DIAMETER
FLANGE 3:20 STUDS & 40 NUTS-1.25" DIAMETER
FLANGE 4:20 STUDS & 40 NUTS-1.25" DIAMETER

INTEGRALLY WELDED ATTACHMENTS:
MS-10-15-AC-H-57:0.625"T
AC-H-201:0.237"T
AC-H-10-14:0.188"T
AC-H-10-15:0.237"T
AC-H-653-1A:0.237"T
AC-H-10-18C:0.237"T

PIPING:
14" SCH 40 .438"T STAINLESS STEEL
12" SCH 40S .375"T STAINLESS STEEL

VALVE BONNET BOLTING:
732:
885A:20 STUDS & 20 NUTS-0.875" DIAMETER
885B:20 STUDS & 20 NUTS-0.875" DIAMETER
882:18 STUDS & 18 NUTS-0.875" DIAMETER
881:20 STUDS & 20 NUTS-0.875" DIAMETER
735A:18 STUDS & 18 NUTS-0.875" DIAMETER
735B:18 STUDS & 18 NUTS-0.875" DIAMETER

VALVE MANUFACTURER:
732:DARLING 885A:DARLING
885B:DARLING 882:DARLING
881:ALOYCO 735A:ALOYCO
735B:ALOYCO

NEW YORK POWER AUTHORITY
INDIAN POINT UNIT NO.3

14" LINE 10 RHR,
14" LINE 57 RHR,
14" LINE 653 RHR &
12" LINE 155 RHR

INT-2-2500

REV. 6

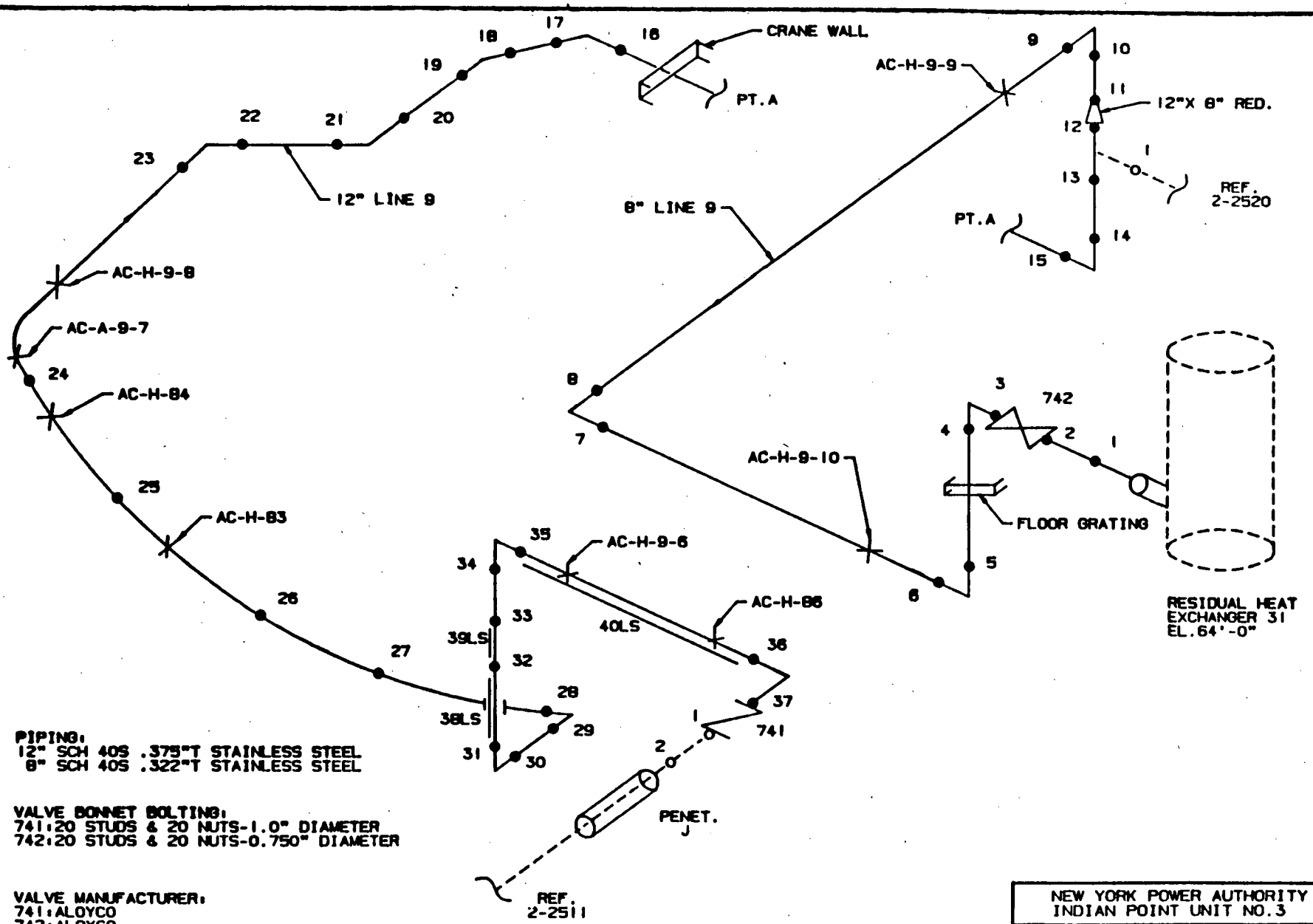

PIPING:
12" SCH 40S .375"T STAINLESS STEEL
8" SCH 40S .322"T STAINLESS STEEL

VALVE BONNET BOLTING:
741:20 STUDS & 20 NUTS-1.0" DIAMETER
742:20 STUDS & 20 NUTS-0.750" DIAMETER

VALVE MANUFACTURER:
741:ALOYCO
742:ALOYCO

INTEGRALLY WELDED ATTACHMENTS:
AC-H-83:0.50"T
AC-H-84:0.50"T
AC-H-86:0.50"T
AC-H-9-6:0.216"T
AC-H-9-7:0.50"T

NEW YORK POWER AUTHORITY INDIAN POINT UNIT NO.3	
12" LINE 9 RHR & 8" LINE 9 RHR	
INT-2-2510	REV. 4

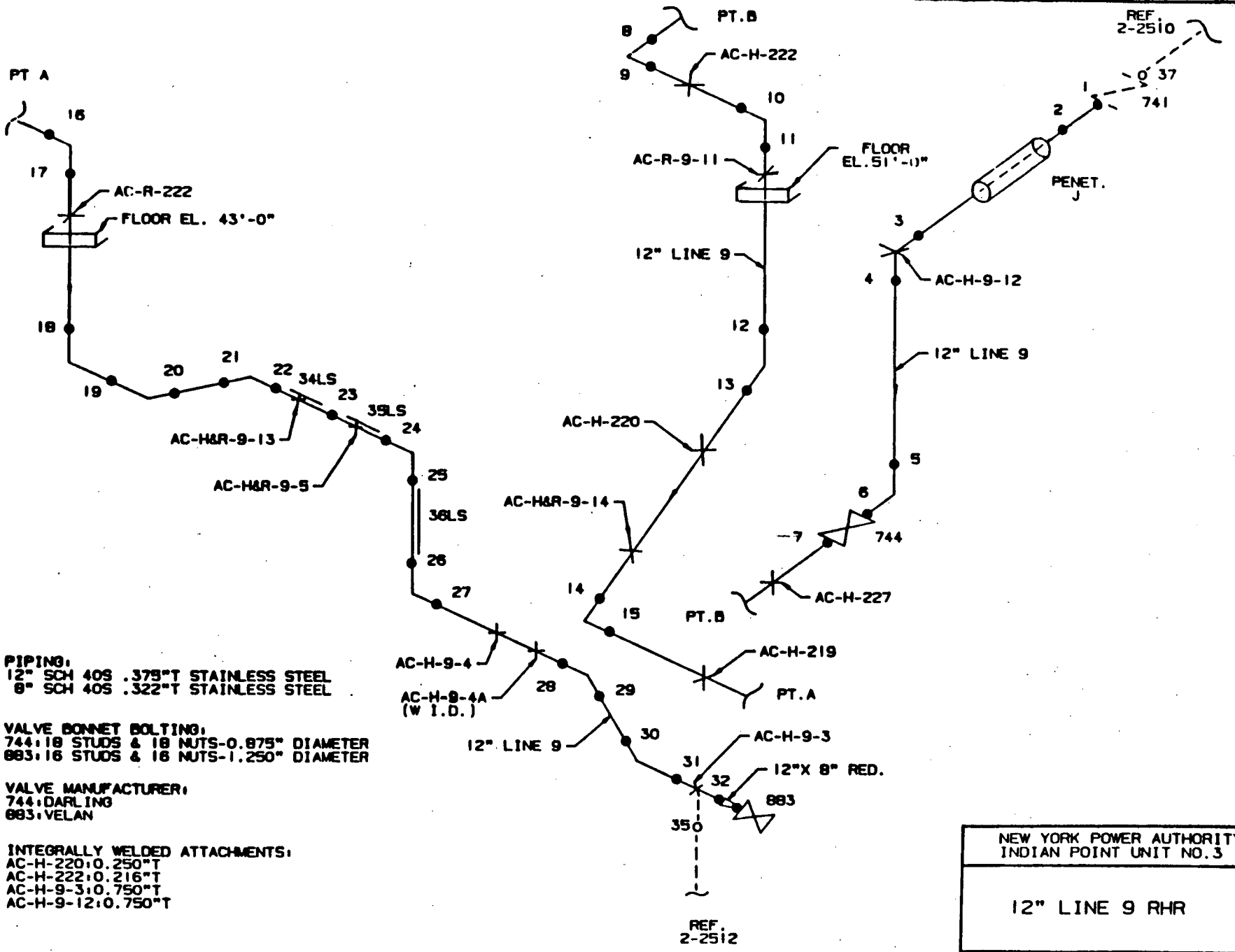

PIPING:
12" SCH 40S .375"T STAINLESS STEEL
8" SCH 40S .322"T STAINLESS STEEL

VALVE BONNET BOLTING:
744:18 STUDS & 18 NUTS-0.875" DIAMETER
883:16 STUDS & 16 NUTS-1.250" DIAMETER

VALVE MANUFACTURER:
744:DARLING
883:VELAN

INTEGRALLY WELDED ATTACHMENTS:
AC-H-220:0.250"T
AC-H-222:0.216"T
AC-H-9-3:0.750"T
AC-H-9-12:0.750"T

NEW YORK POWER AUTHORITY INDIAN POINT UNIT NO.3	
12" LINE 9 RHR	
INT-2-2511	REV. 4

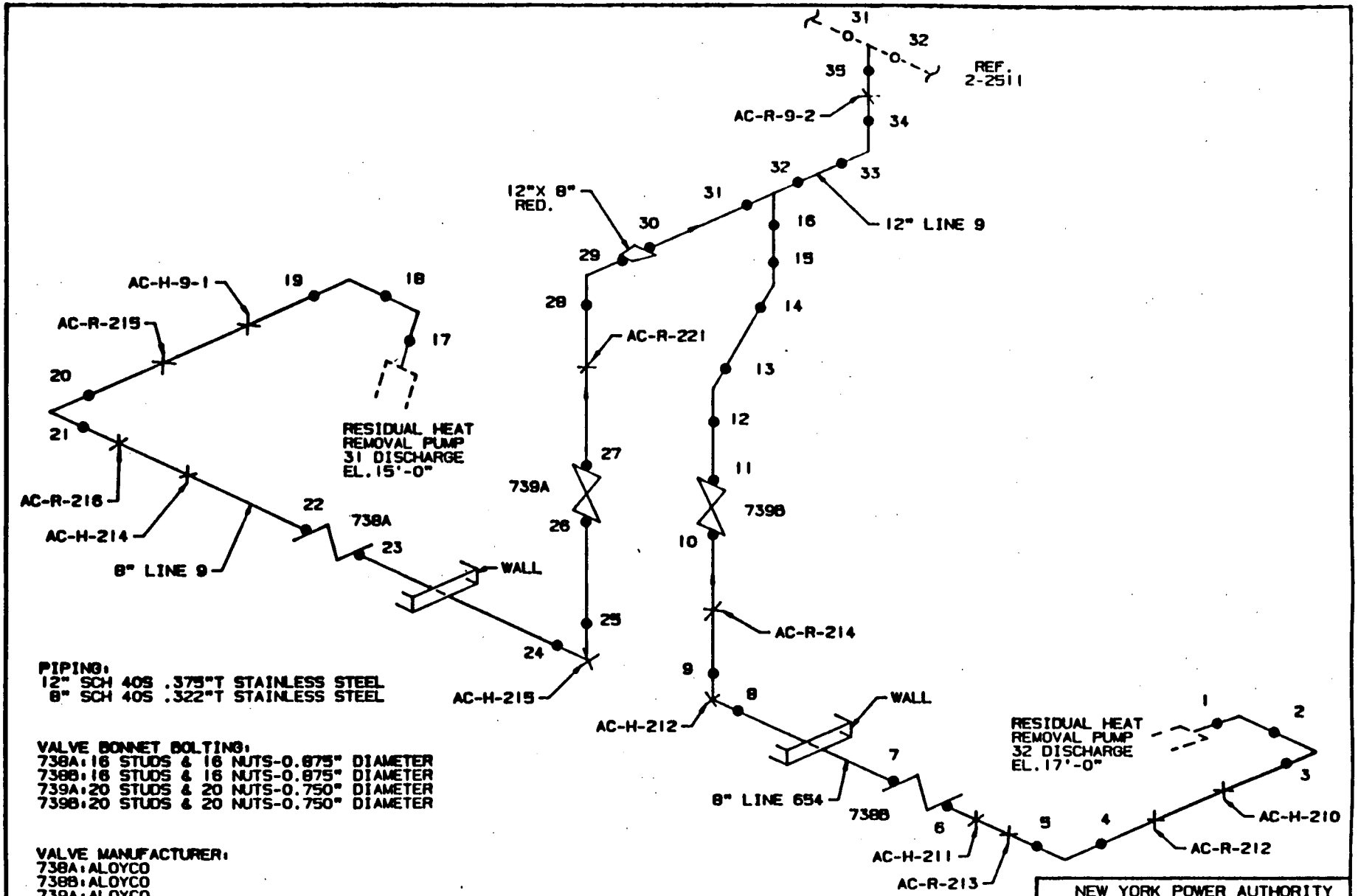

PIPING:
12" SCH 40S .375"T STAINLESS STEEL
8" SCH 40S .322"T STAINLESS STEEL

VALVE BONNET BOLTING:
738A:16 STUDS & 16 NUTS-0.875" DIAMETER
738B:16 STUDS & 16 NUTS-0.875" DIAMETER
739A:20 STUDS & 20 NUTS-0.750" DIAMETER
739B:20 STUDS & 20 NUTS-0.750" DIAMETER

VALVE MANUFACTURER:
738A:ALOYCO
738B:ALOYCO
739A:ALOYCO
739B:ALOYCO

INTEGRALLY WELDED ATTACHMENTS:
AC-H-210:0.203"T
AC-H-211:0.203"T
AC-H-212:0.203"T
AC-H-215:0.203"T

NEW YORK POWER AUTHORITY
INDIAN POINT UNIT NO.3

12" LINE 9 RHR,
8" LINE 9 RHR &
8" LINE 654 RHR

INT-2-2512

REV. 4

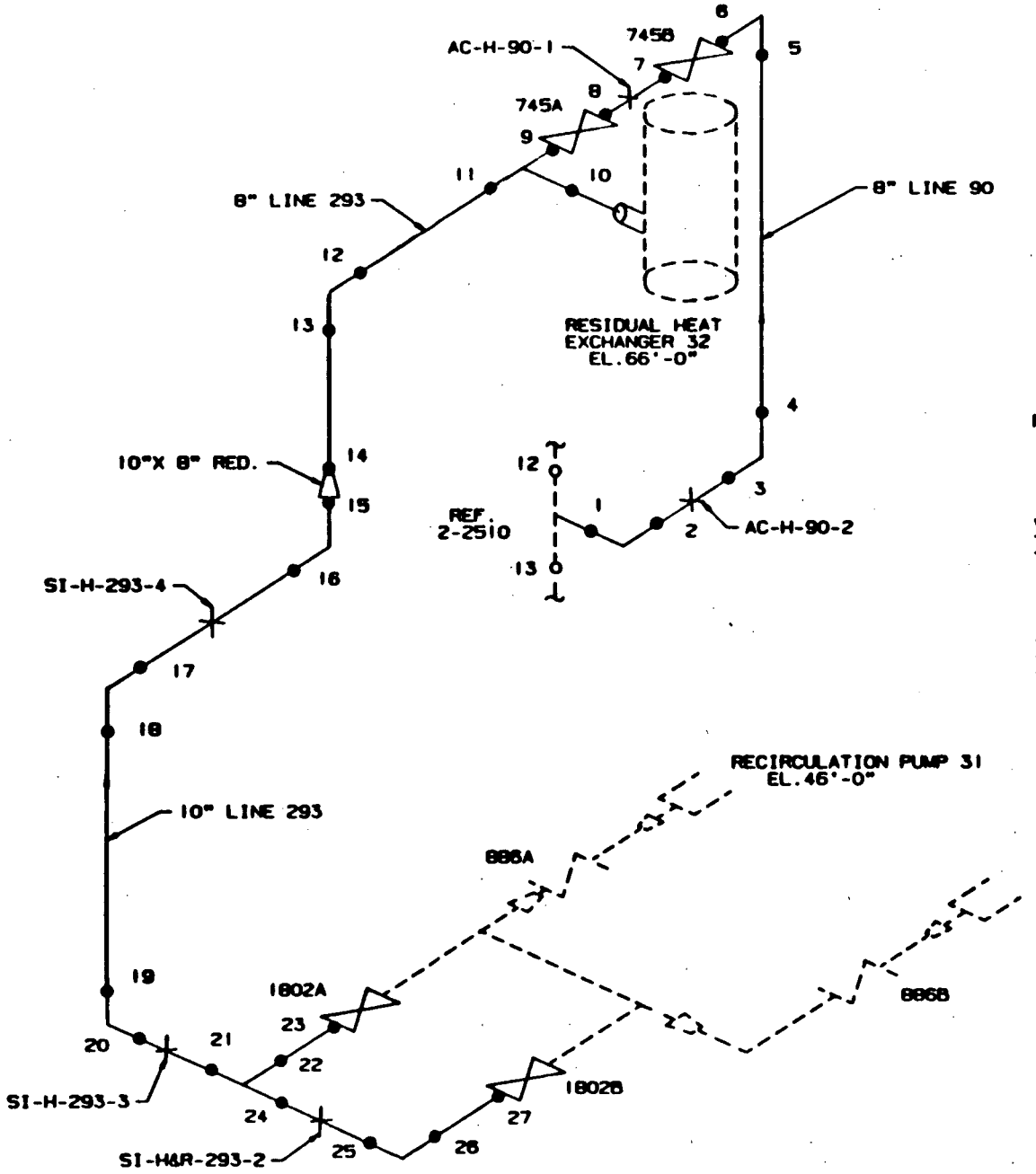

PIPING:
10" SCH 40S .365"T STAINLESS STEEL
8" SCH 40S .322"T STAINLESS STEEL

VALVE BONNET BOLTING:
745A: 20 STUDS & 20 NUTS-0.750" DIAMETER
745B: 20 STUDS & 20 NUTS-0.750" DIAMETER
1802A: 18 STUDS & 18 NUTS-0.750" DIAMETER
1802B: 18 STUDS & 18 NUTS-0.750" DIAMETER

VALVE MANUFACTURER:
745A: ALOYCO
745B: ALOYCO
1802A: DARLING
1802B: DARLING

NEW YORK POWER AUTHORITY INDIAN POINT UNIT NO.3	
10" LINE 293 RHR, 8" LINE 293 RHR & 8" LINE 90 RHR	
INT-2-2520	REV. 2

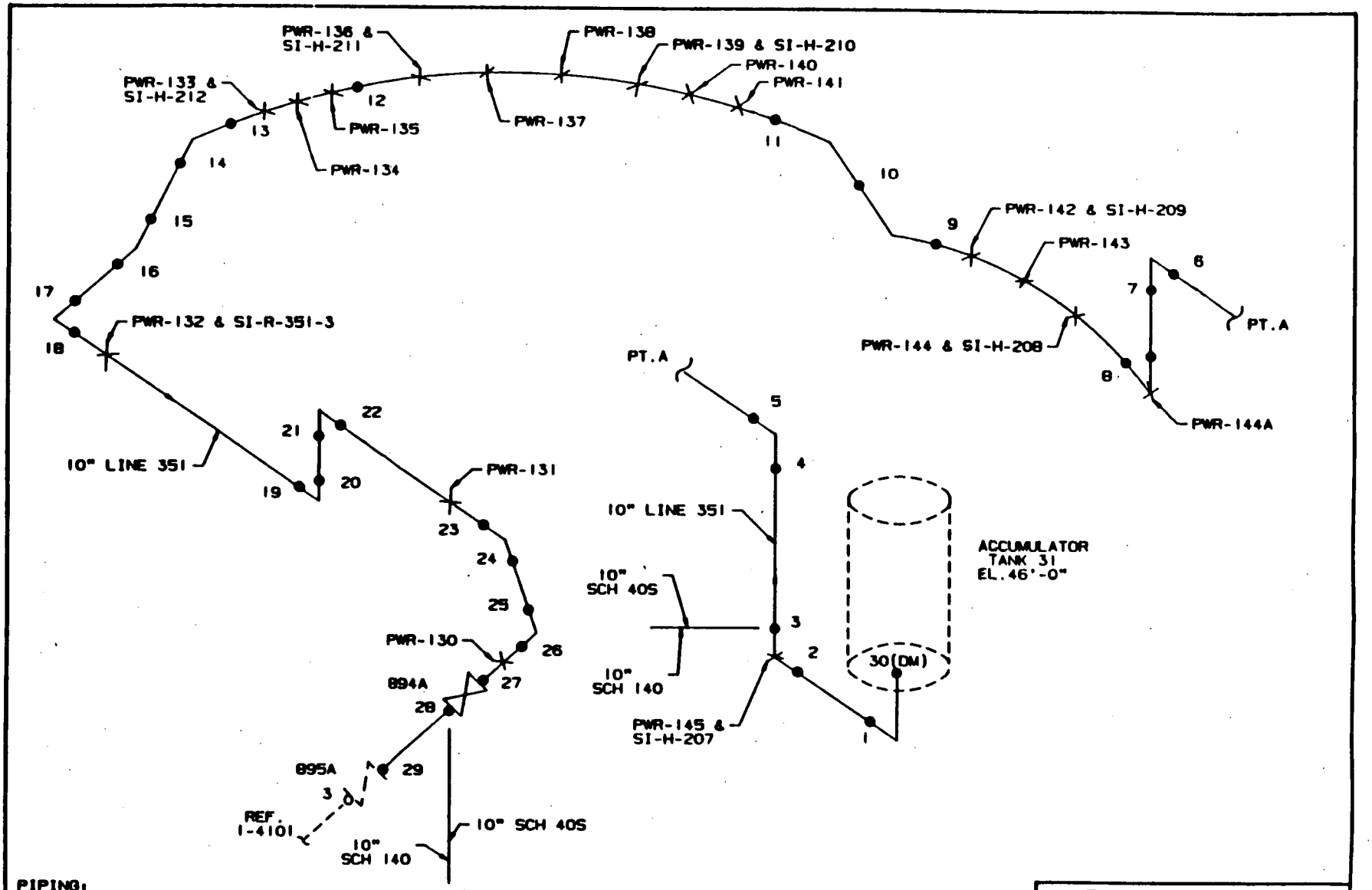

PIPING:
10" SCH 140 1.00"T STAINLESS STEEL
10" SCH 40S .365"T STAINLESS STEEL

VALVE BONNET BOLTING:
894A: 10 STUDS & 10 NUTS-1.875" DIAMETER

VALVE MANUFACTURER:
894A: DARLING

INTEGRALLY WELDED ATTACHMENTS:
PWR-142:
PWR-144:

NEW YORK POWER AUTHORITY
INDIAN POINT UNIT NO.3

ACCUMULATOR DISCHARGE
10" LINE 351

INT-2-2521

REV. 3

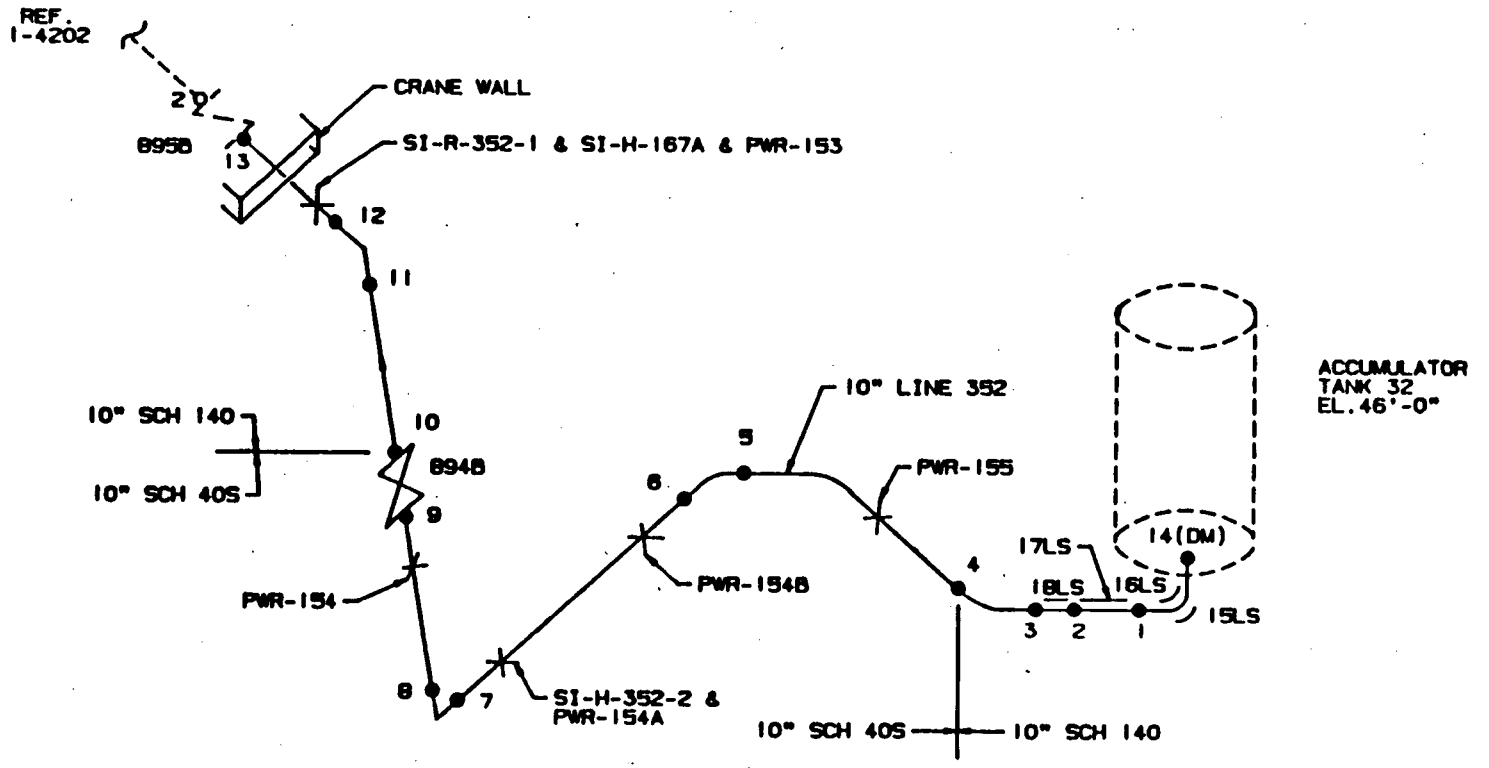

PIPING:
10" SCH 140 1.00"T STAINLESS STEEL
10" SCH 40S .365"T STAINLESS STEEL

VALVE BONNET BOLTING:
894B:10 STUDS & 10 NUTS-1.875" DIAMETER

VALVE MANUFACTURER:
894B:DARLING

INTEGRALLY WELDED ATTACHMENTS:
SI-H-167A:0.375"T

NEW YORK POWER AUTHORITY INDIAN POINT UNIT NO.3	
ACCUMULATOR DISCHARGE 10" LINE 352	
INT-2-2522	REV. 4

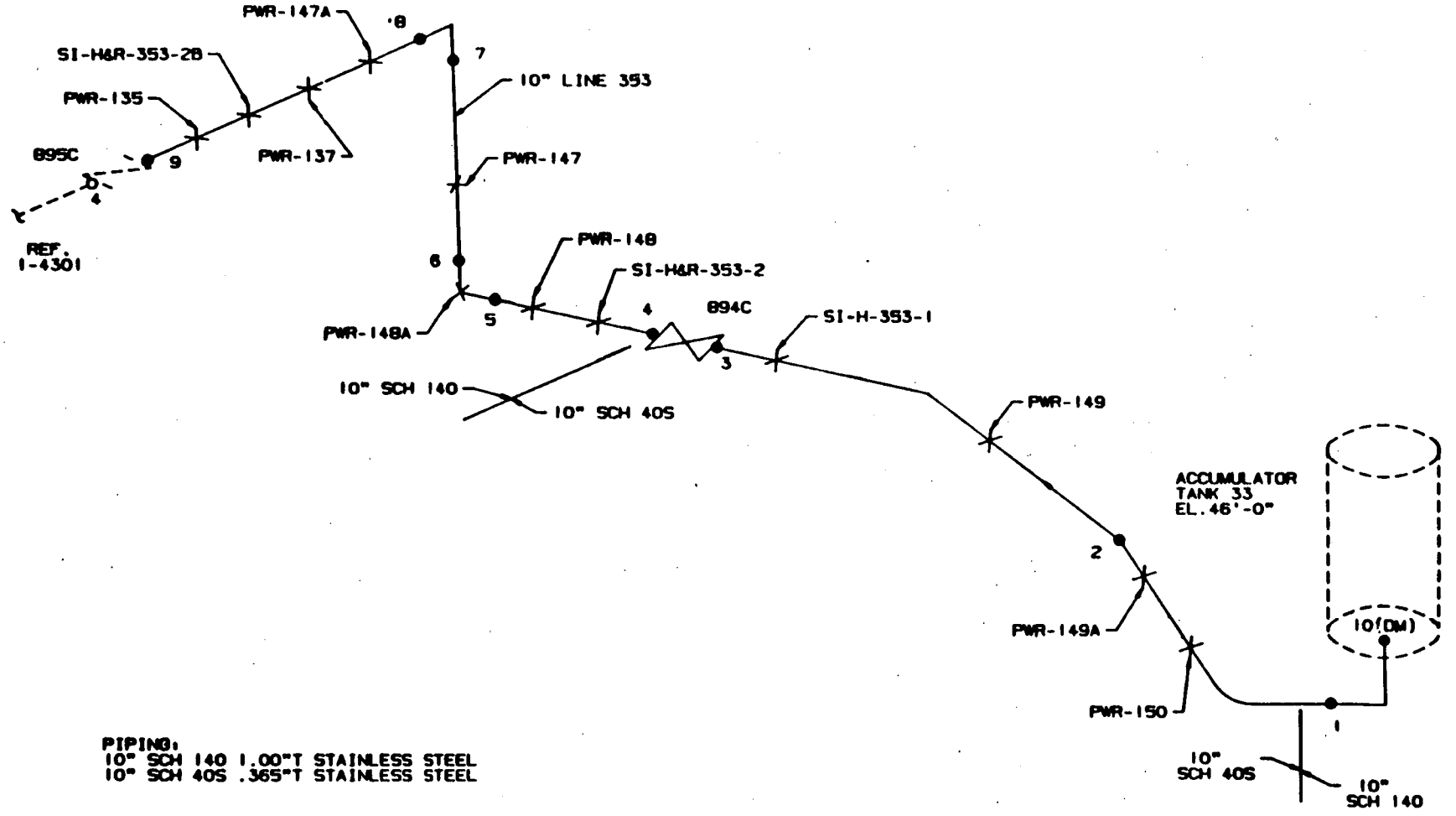

PIPING:
10" SCH 140 1.00"T STAINLESS STEEL
10" SCH 40S .365"T STAINLESS STEEL

VALVE BONNET BOLTING:
894C:10 STUDS & 10 NUTS-1.875" DIAMETER

VALVE MANUFACTURER:
894C:DARLING

INTEGRALLY WELDED ATTACHMENTS:
SI-H&R-353-2B:
PWR-148A:

NEW YORK POWER AUTHORITY INDIAN POINT UNIT NO.3	
ACCUMULATOR DISCHARGE 10" LINE 353	
INT-2-2523	REV. 3

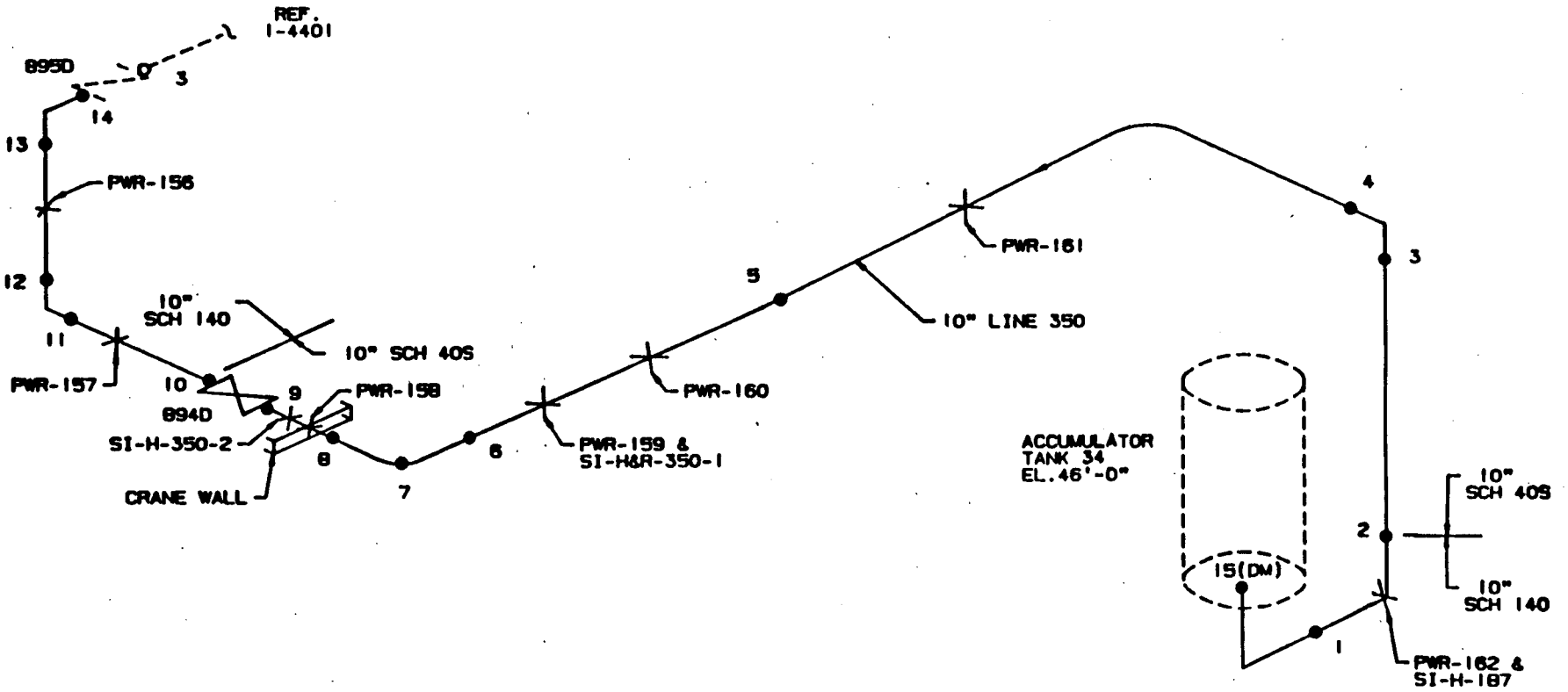

PIPING:
10" SCH 140 1.00"T STAINLESS STEEL
10" SCH 40S .365"T STAINLESS STEEL

VALVE BONNET BOLTING:
894D:10 STUDS & 10 NUTS-1.875" DIAMETER

VALVE MANUFACTURER:
894D:DARLING

INTEGRALLY WELDED ATTACHMENTS:
SI-H-187:0.216"T
PWR-159:0.50"T

NEW YORK POWER AUTHORITY INDIAN POINT UNIT NO.3	
ACCUMULATOR DISCHARGE 10" LINE 350	
INT-2-2524	REV. 4

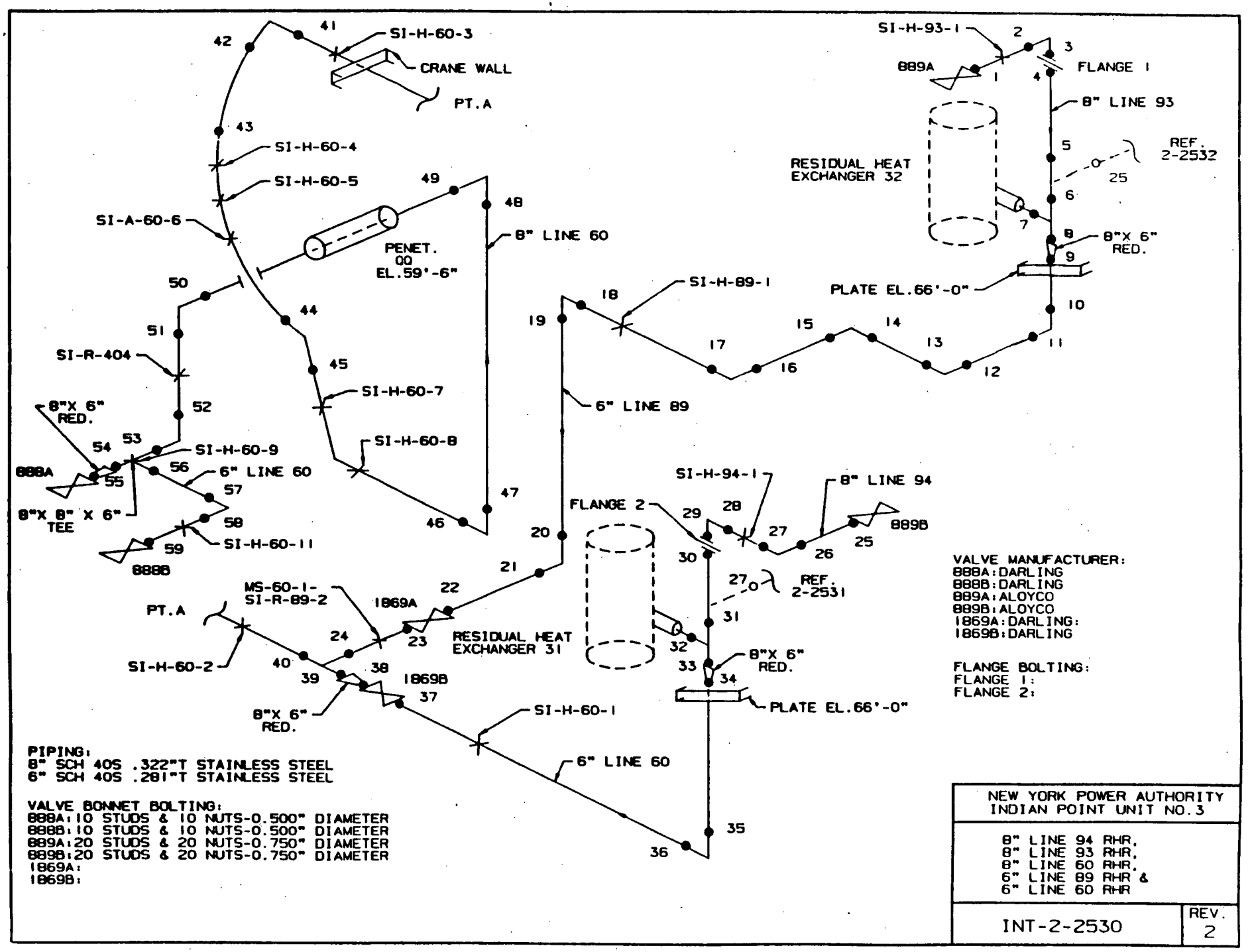

VALVE MANUFACTURER:
888A:DARLING
888B:DARLING
889A:ALOYCO
889B:ALOYCO
1869A:DARLING:
1869B:DARLING

FLANGE BOLTING:
FLANGE 1:
FLANGE 2:

PIPING:
8" SCH 40S .322"T STAINLESS STEEL
6" SCH 40S .281"T STAINLESS STEEL

VALVE BONNET BOLTING:
888A:10 STUDS & 10 NUTS-0.500" DIAMETER
888B:10 STUDS & 10 NUTS-0.500" DIAMETER
889A:20 STUDS & 20 NUTS-0.750" DIAMETER
889B:20 STUDS & 20 NUTS-0.750" DIAMETER
1869A:
1869B:

NEW YORK POWER AUTHORITY
INDIAN POINT UNIT NO.3

8" LINE 94 RHR,
8" LINE 93 RHR,
8" LINE 60 RHR,
6" LINE 89 RHR &
6" LINE 60 RHR

INT-2-2530 | REV. 2

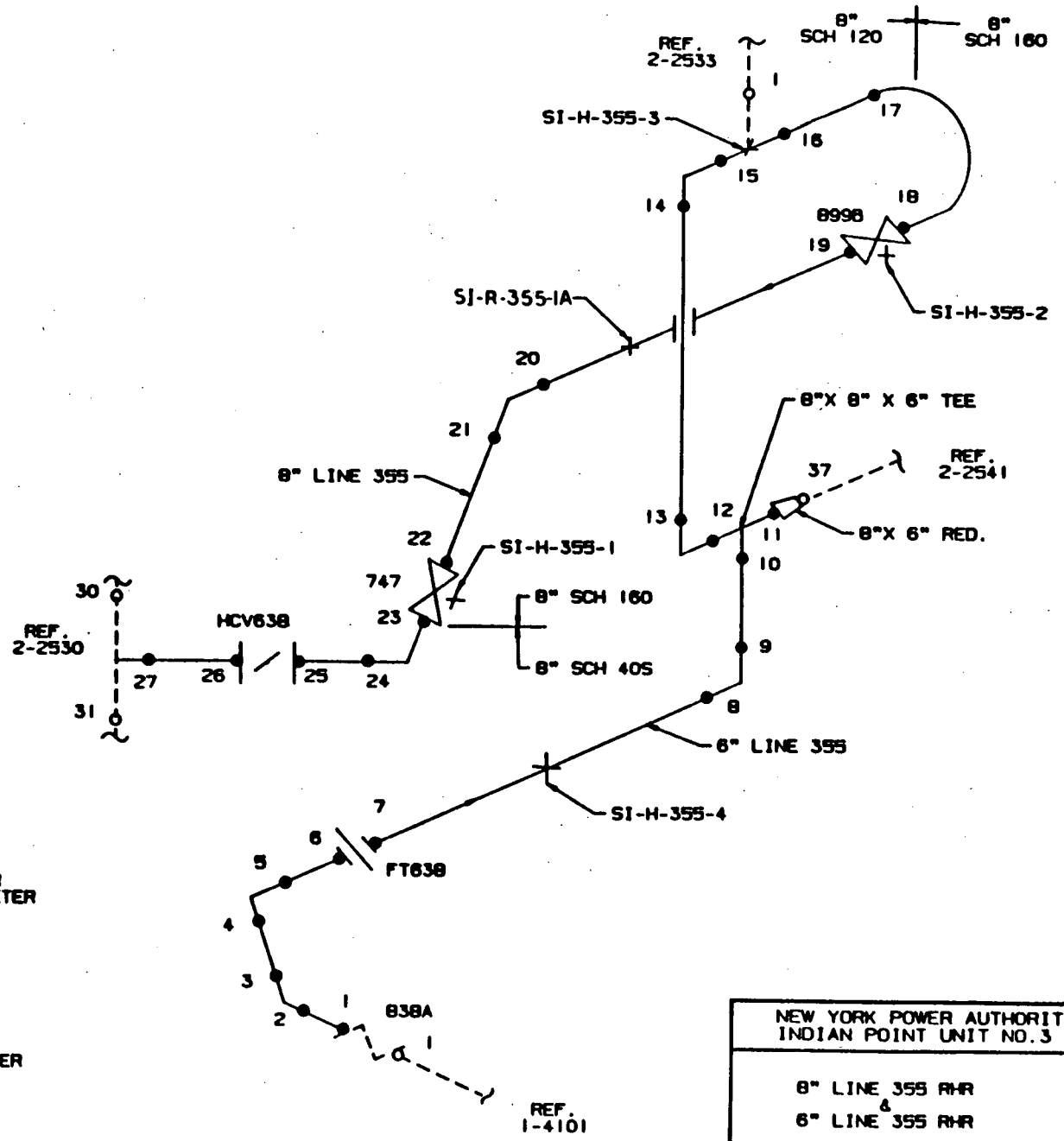

PIPING:
8" SCH 160 .906"T STAINLESS STEEL
8" SCH 120 .719"T STAINLESS STEEL
8" SCH 40S .322"T STAINLESS STEEL
6" SCH 120 .562"T STAINLESS STEEL

VALVE BONNET BOLTING:
8998:
747:16 STUDS & 16 NUTS-1.875" DIAMETER
HCV638:12 STUDS & 12 NUTS-0.750" DIAMETER

VALVE MANUFACTURER:
8998:DARLING
747:DARLING
HCV638:CONTINENTAL

FLANGE BOLTING:
FT638:12 STUDS & 24 NUTS-1.375" DIAMETER

NEW YORK POWER AUTHORITY
INDIAN POINT UNIT NO.3

8" LINE 355 RHR
&
6" LINE 355 RHR

INT-2-2531

REV. 2

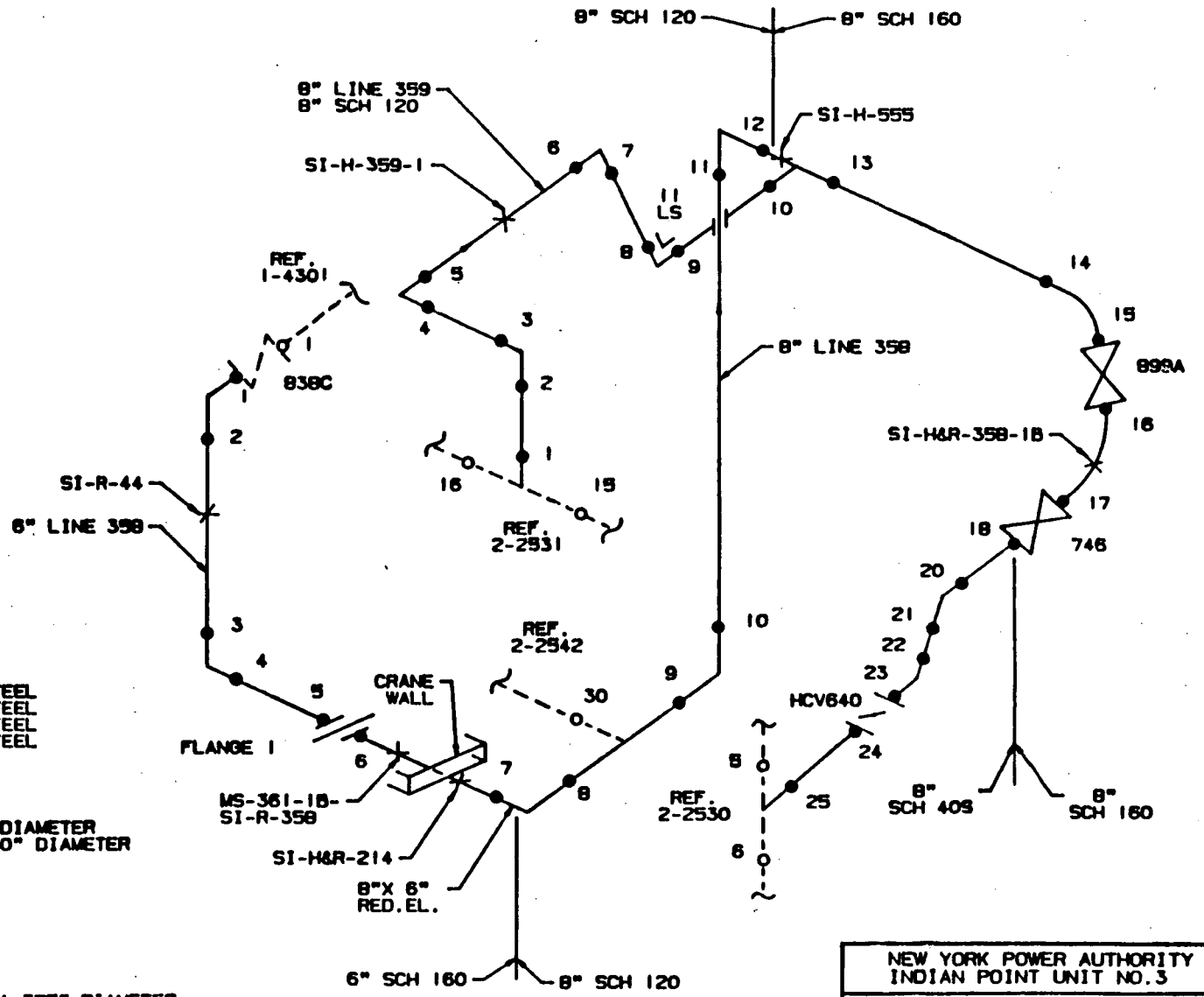

PIPING:
8" SCH 160 .906"T STAINLESS STEEL
8" SCH 120 .719"T STAINLESS STEEL
8" SCH 40S .322"T STAINLESS STEEL
6" SCH 120 .562"T STAINLESS STEEL

VALVE BONNET BOLTING:
899A:
746:16 STUDS & 16 NUTS-1.875" DIAMETER
HCV640:12 STUDS & 12 NUTS-0.750" DIAMETER

VALVE MANUFACTURER:
899A:DARLING
746:DARLING
HCV640:CONTINENTAL

FLANGE BOLTING:
FLANGE 1:12 STUDS AND 24 NUTS-1.375" DIAMETER

INTEGRALLY WELDED ATTACHMENTS:
SI-H&R-214:0.50"T

NEW YORK POWER AUTHORITY
INDIAN POINT UNIT NO.3

INT-2-2532
8" LINE 358 RHR &
6" LINE 358 RHR
INT-2-2533
8" LINE 359 RHR

INT-2-2532 &
INT-2-2533

REV.
4

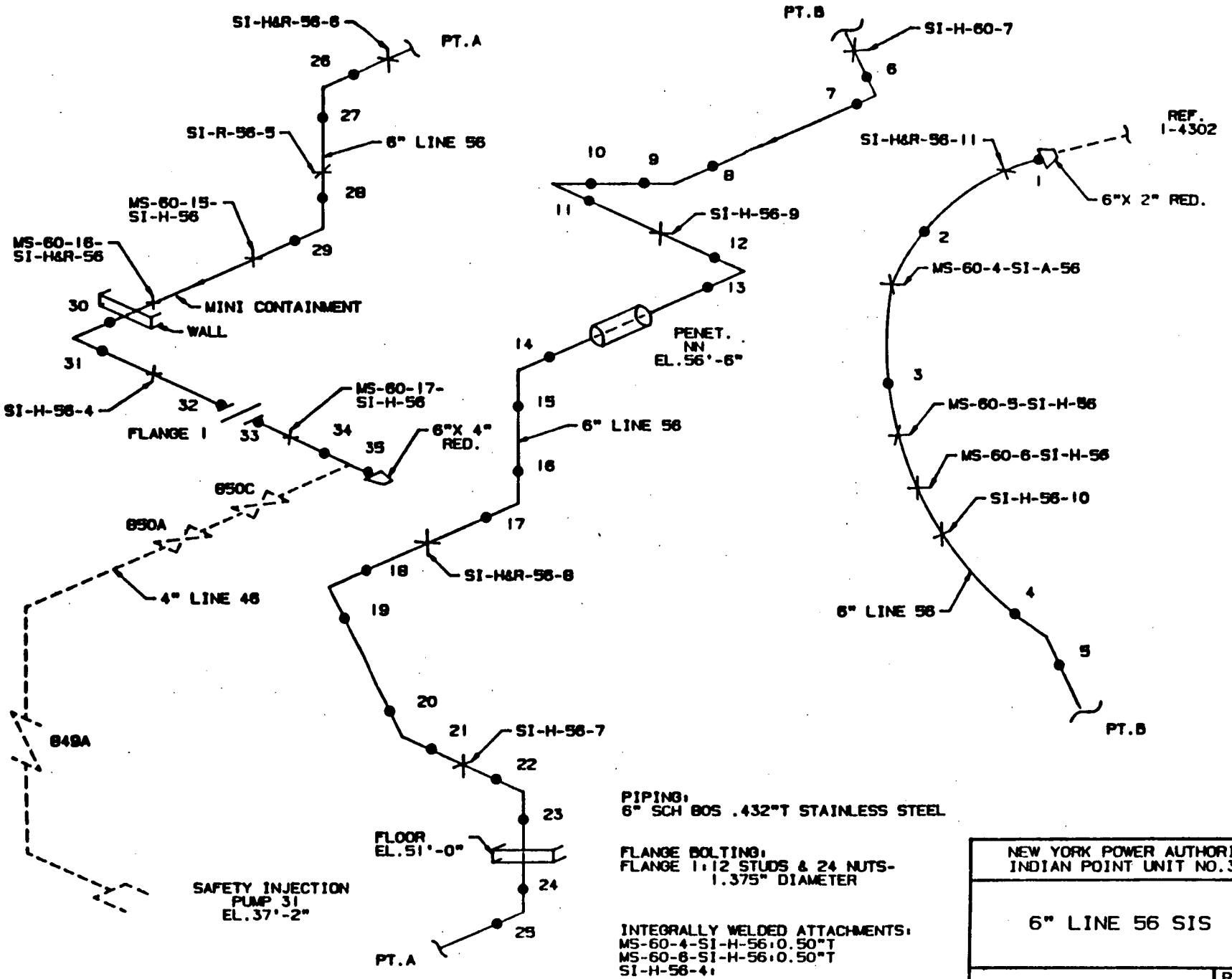

PIPING:
6" SCH 80S .432"T STAINLESS STEEL

FLANGE BOLTING:
FLANGE 1: 12 STUDS & 24 NUTS-
1.375" DIAMETER

INTEGRALLY WELDED ATTACHMENTS:
MS-60-4-SI-H-56: 0.50"T
MS-60-6-SI-H-56: 0.50"T
SI-H-56-4:

NEW YORK POWER AUTHORITY INDIAN POINT UNIT NO.3	
6" LINE 56 SIS	
INT-2-2540	REV. 3

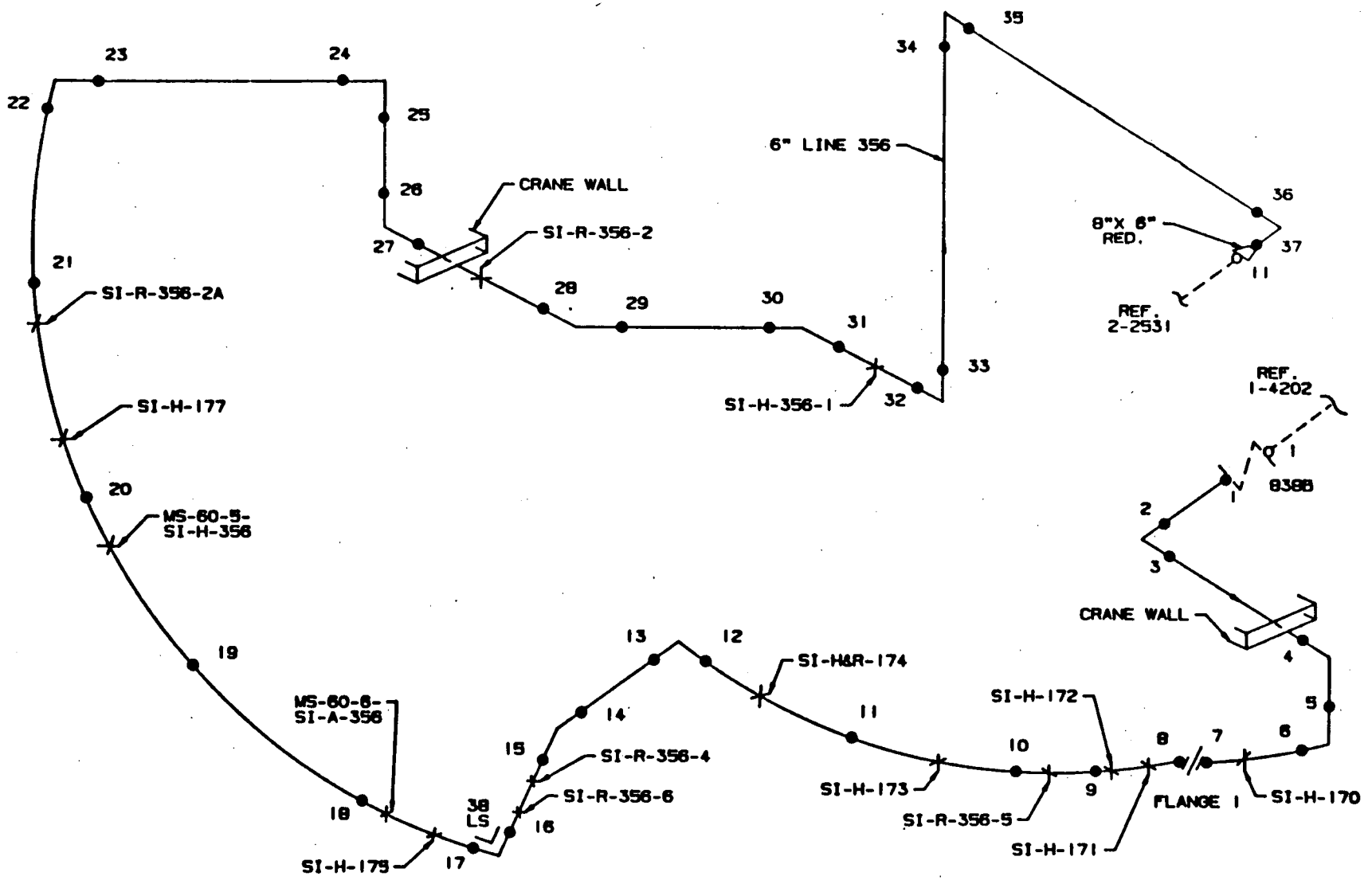

PIPING:
6" SCH 120 .562"T STAINLESS STEEL

FLANGE BOLTING:
FLANGE 1: 12 STUDS & 24 NUTS-1.375" DIAMETER

NEW YORK POWER AUTHORITY INDIAN POINT UNIT NO.3	
6" LINE 356 RHR	
INT-2-2541	REV. 3

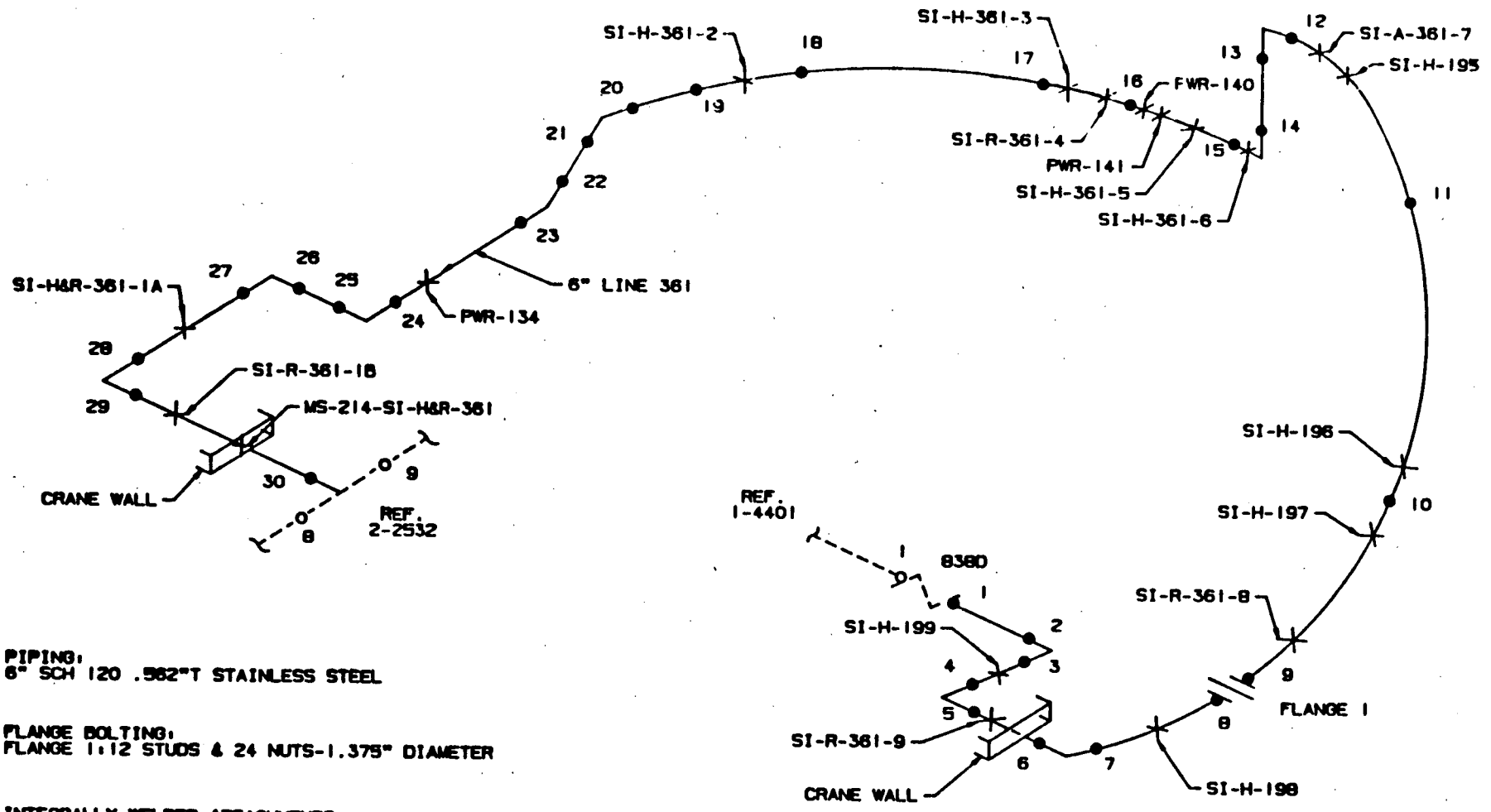

PIPING:
6" SCH 120 .562"T STAINLESS STEEL

FLANGE BOLTING:
FLANGE 1:12 STUDS & 24 NUTS-1.375" DIAMETER

INTEGRALLY WELDED ATTACHMENTS:
MS-214-SI-H&R-361:0.375"T
SI-H&R-361-1A:0.50"T
SI-H-361-5:0.375"T
SI-A-361-7:0.50"T
SI-H-196:0.50"T

NEW YORK POWER AUTHORITY INDIAN POINT UNIT NO.3	
6" LINE 361 RHR	
INT-2-2542	REV. 4

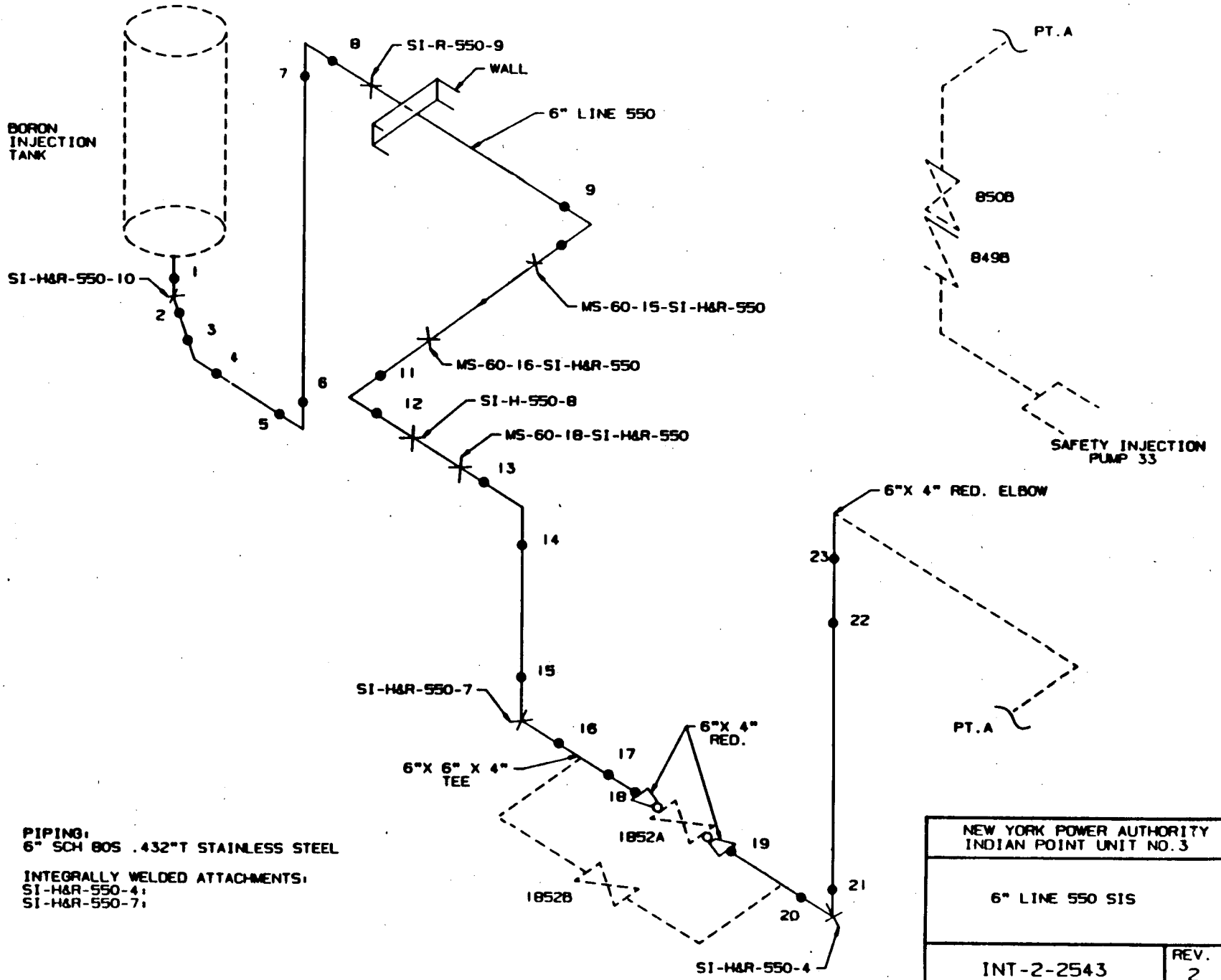
BORON INJECTION TANK
SI-H&R-550-10
1
2
3
4
5
6
7
8
SI-R-550-9
WALL
6" LINE 550
9
MS-60-15-SI-H&R-550
MS-60-16-SI-H&R-550
11
12
SI-H-550-8
MS-60-18-SI-H&R-550
13
14
15
SI-H&R-550-7
16
17
6"X 6" X 4" TEE
18
1852A
6"X 4" RED.
19
1852B
20
21
SI-H&R-550-4
22
23
6"X 4" RED. ELBOW
PT.A
PT.A
850B
849B
SAFETY INJECTION PUMP 33
PIPING:
6" SCH 80S .432"T STAINLESS STEEL
INTEGRALLY WELDED ATTACHMENTS:
SI-H&R-550-4:
SI-H&R-550-7:
NEW YORK POWER AUTHORITY
INDIAN POINT UNIT NO.3
6" LINE 550 SIS
INT-2-2543
REV.
2

RESIDUAL HEAT REMOVAL PUMP
ACAPRH1-31

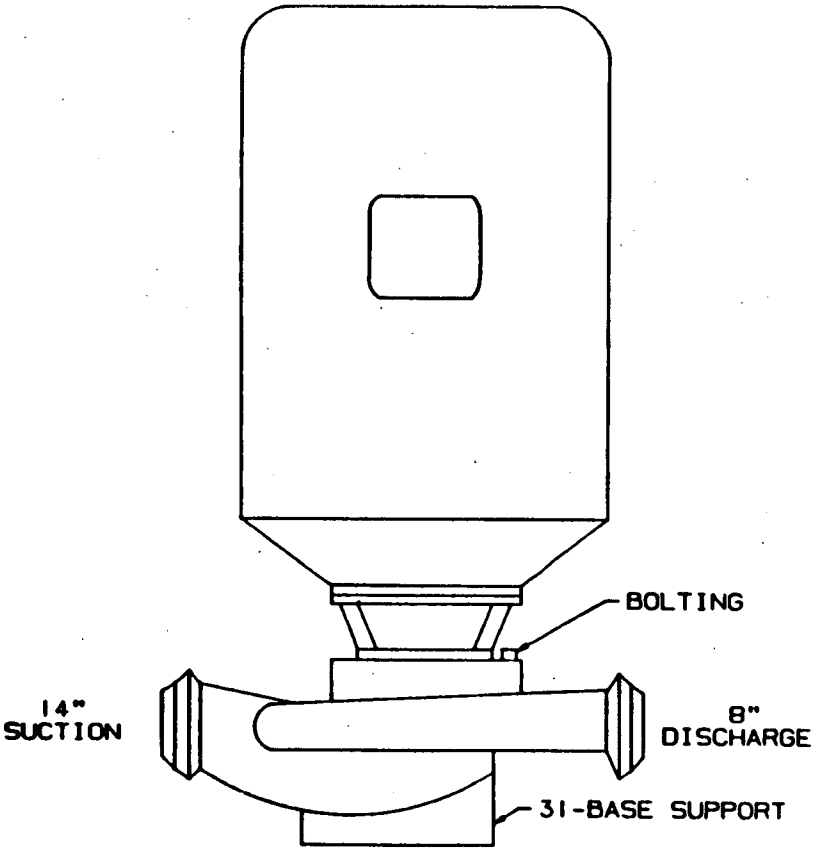

RESIDUAL HEAT REMOVAL PUMP
ACAPRH2-32

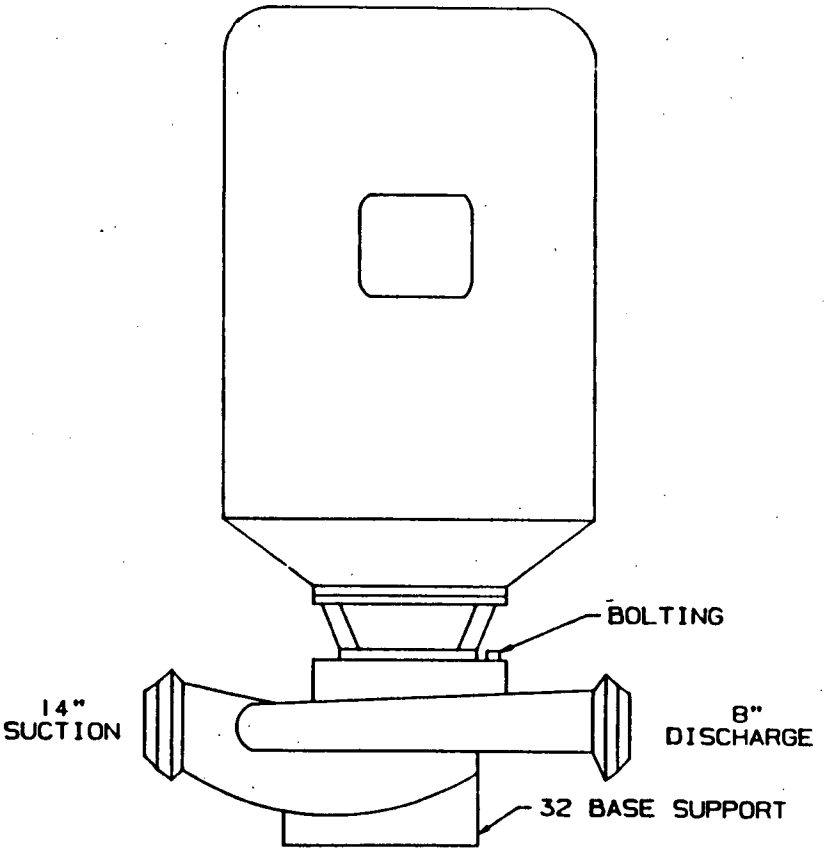

INTEGRALLY WELDED ATTACHMENTS: NOT APPLICABLE
COMPONENT SUPPORTS: BASE SUPPORT
BOLTING: 4-0.75" DIAMETER
CASING WELD: NOT APPLICABLE
0 REFERENCE: CENTERLINE OF 8" DISCHARGE

NEW YORK POWER AUTHORITY INDIAN POINT UNIT NO.3	
RESIDUAL HEAT REMOVAL PUMPS ACAPRH1-31 & ACAPRH2-32	
INT-2-3100	REV. 2

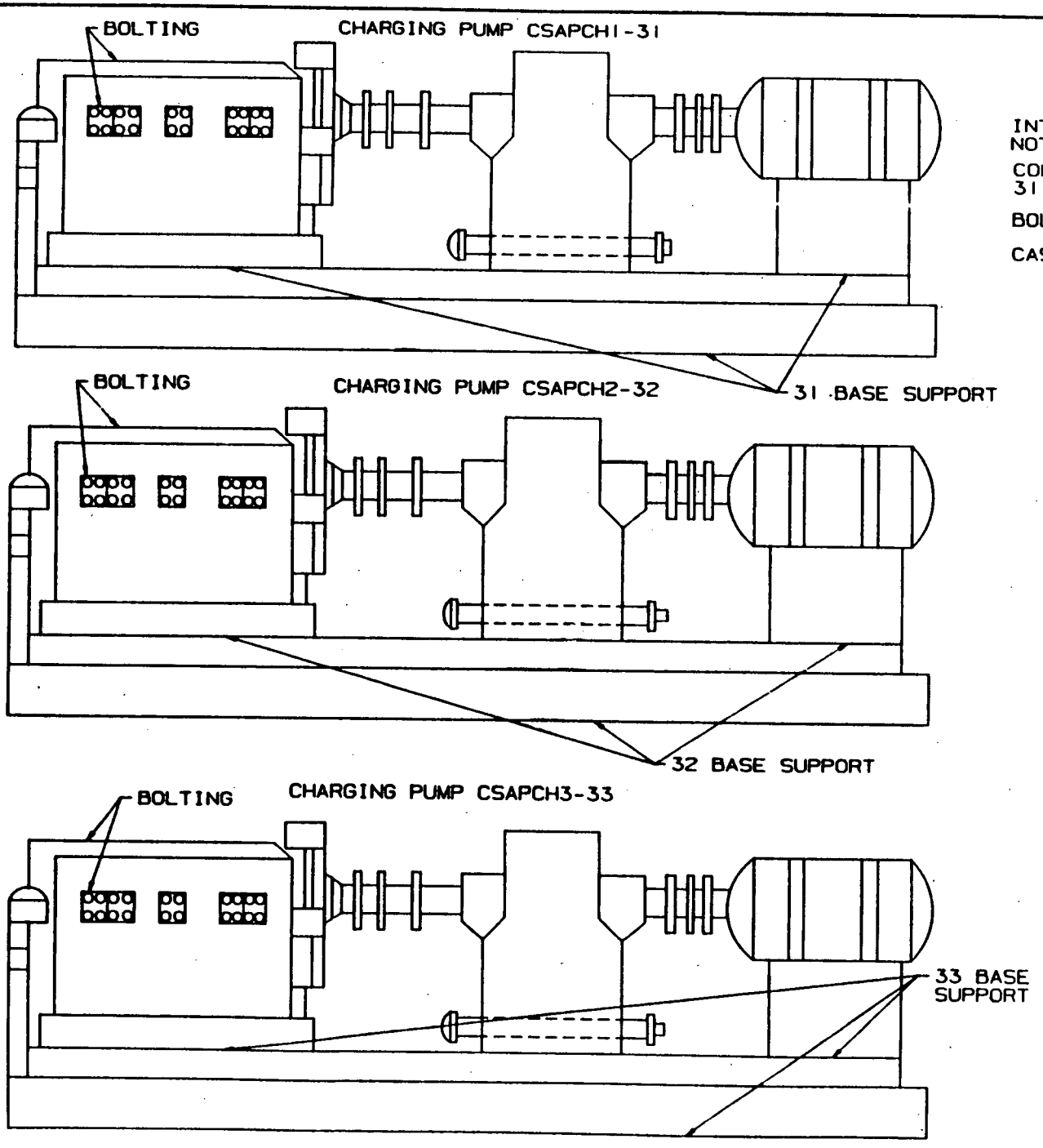

INTEGRALLY WELDED ATTACHMENTS: NOT APPLICABLE

COMPONENT SUPPORTS: 31, 32 & 33 BASE SUPPORTS

BOLTING: 40-1.25" DIAMETER

CASING WELD: NOT APPLICABLE

NEW YORK POWER AUTHORITY INDIAN POINT UNIT NO.3	
CHARGING PUMPS CSAPCH1-31, CSAPCH2-32 & CSAPCH3-33	
INT-2-3110	REV. 2

SAFETY INJECTION PUMP
SIAPS11-31

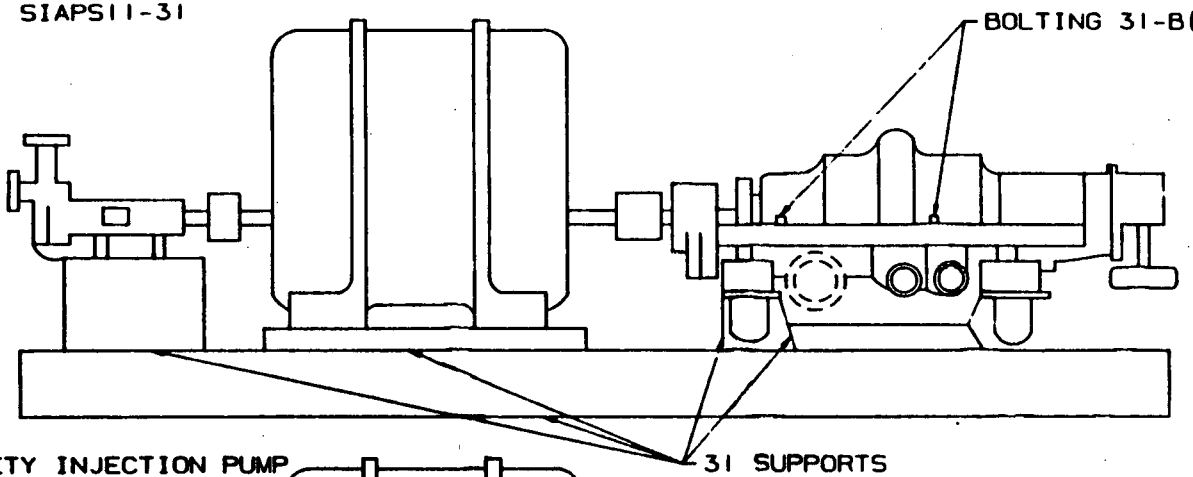

INTEGRALLY NWELDED ATTACHMENTS:
NOT APPLICABLE

COMPONENT SUPPORTS:
AS APPLICABLE

BOLTING: 1,2,3,4,5,6,7 & 11-
2.125" DIAMETER
41 BOLTS-2.000" DIAMETER
1.625" DIAMETER
1.250" DIAMETER
1.000" DIAMETER

CASING WELD: NOT APPLICABLE

SAFETY INJECTION PUMP
SIAPS12-32

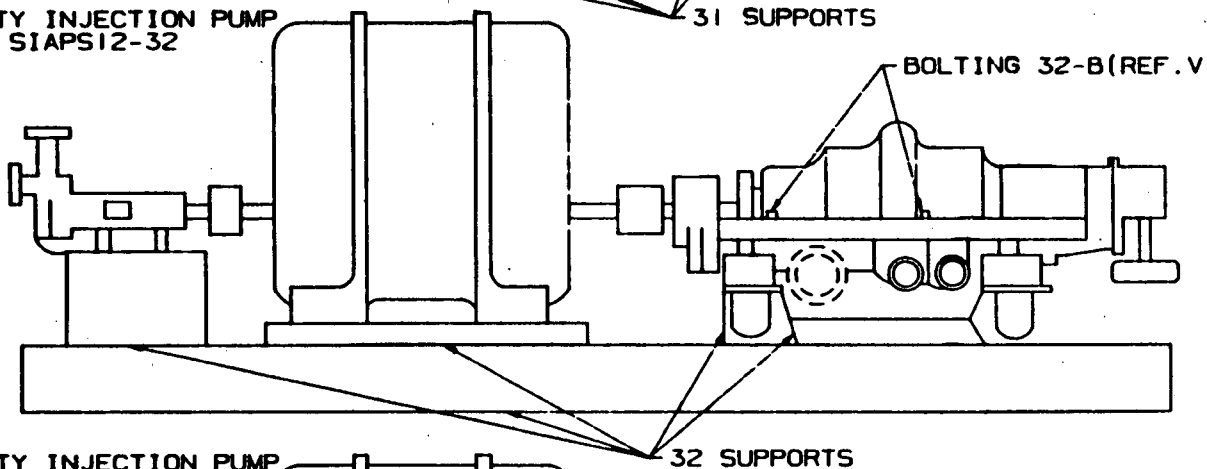

SAFETY INJECTION PUMP
SIAPS13-33

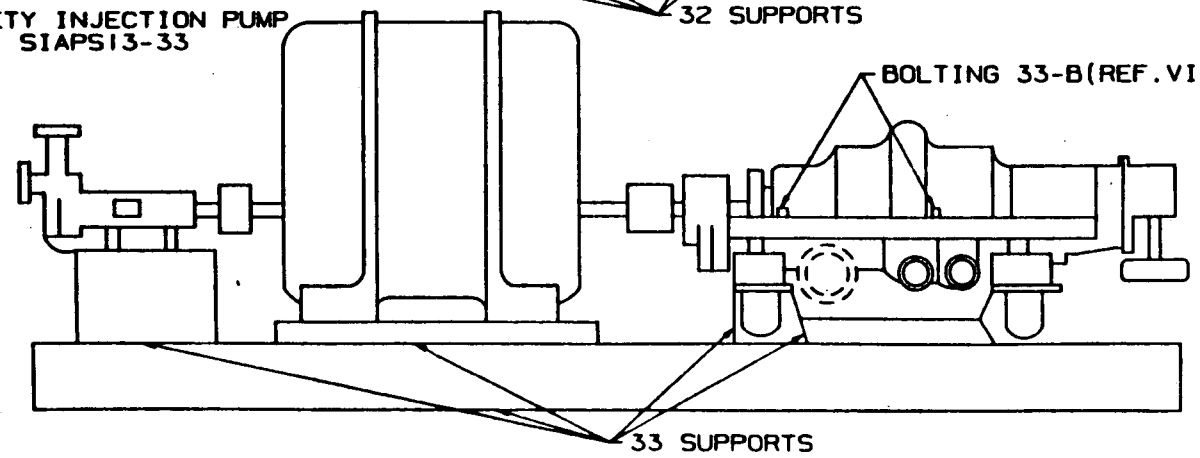

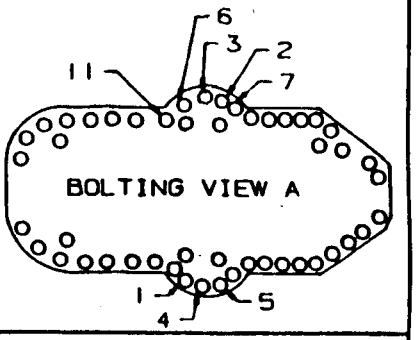

NEW YORK POWER AUTHORITY
INDIAN POINT UNIT NO.3

SAFETY INJECTION PUMPS
SIAPS11-31, SIAPS12-32 &
SIAPS13-33

INT-2-3130

REV.
0

RESIDUAL HEAT EXCHANGER ACAHRS1-31

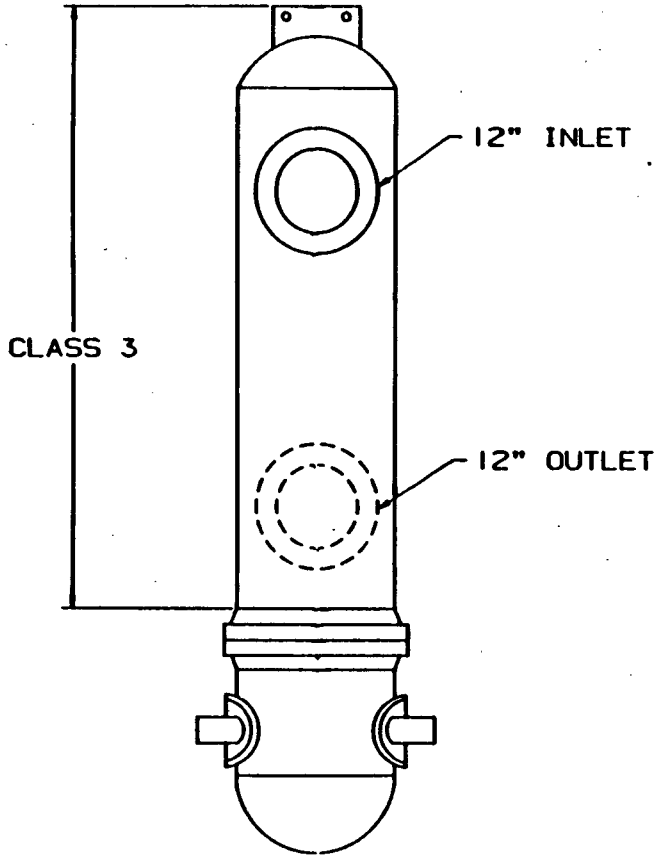

RESIDUAL HEAT EXCHANGER ACAHRS2-32

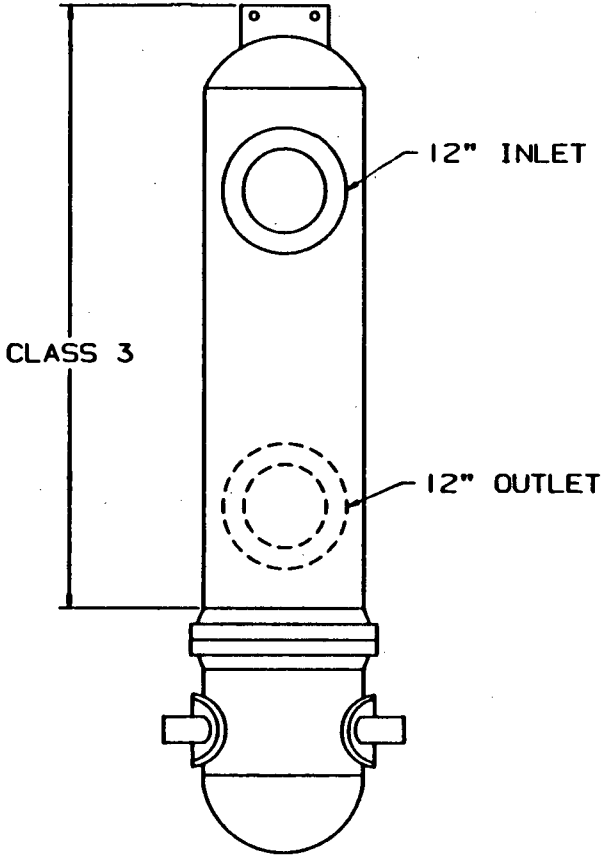

NEW YORK POWER AUTHORITY INDIAN POINT UNIT NO.3	
RESIDUAL HEAT EXCHANGER ACAHRS1-31 RESIDUAL HEAT EXCHANGER ACAHRS2-32	
INT-3-1100	REV. 0

SPENT FUEL PIT HEAT EXCHANGER ACAHSF1-31

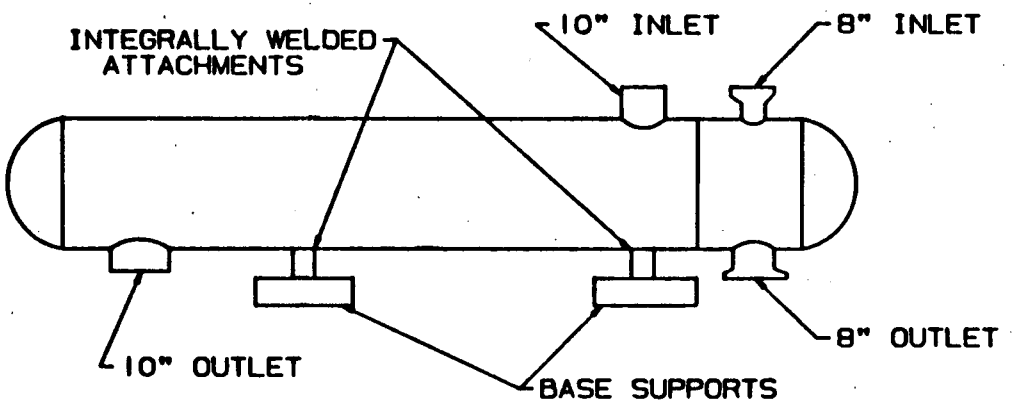

NEW YORK POWER AUTHORITY INDIAN POINT UNIT NO.3	
SPENT FUEL PIT HEAT EXCHANGER ACAHSF1-31	
INT-3-1110	REV. 1

NON REGENERATIVE LETDOWN HEAT EXCHANGER
CSAHNRT-31

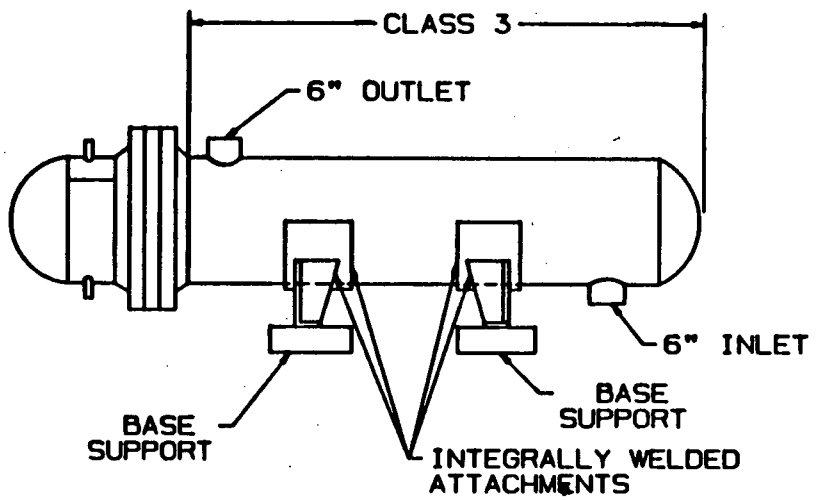

NEW YORK POWER AUTHORITY INDIAN POINT UNIT NO.3	
NON REGENERATIVE LETDOWN HEAT EXCHANGER CSAHNRT-31	
INT-3-1120	REV. 1

SEAL WATER HEAT EXCHANGER CSAHSW1-31

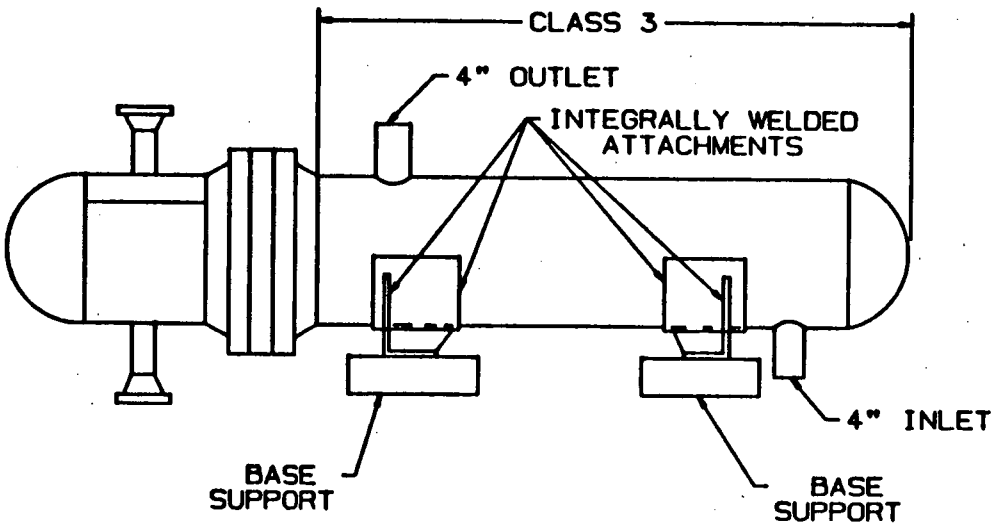

NEW YORK POWER AUTHORITY INDIAN POINT UNIT NO.3	
SEAL WATER HEAT EXCHANGER CSAHSW1-31	
INT-3-1130	REV. 1

COMPONENT COOLING HEAT EXCHANGER
ACAHCC1-31

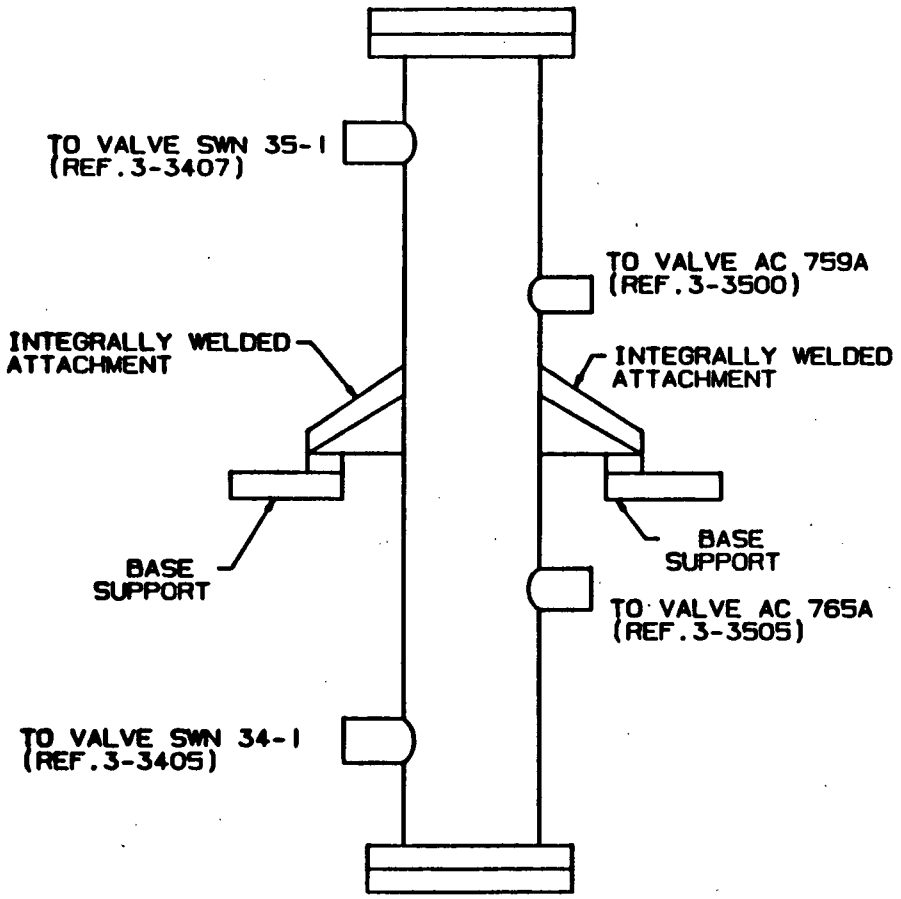

COMPONENT COOLING HEAT EXCHANGER
ACAHCC2-32

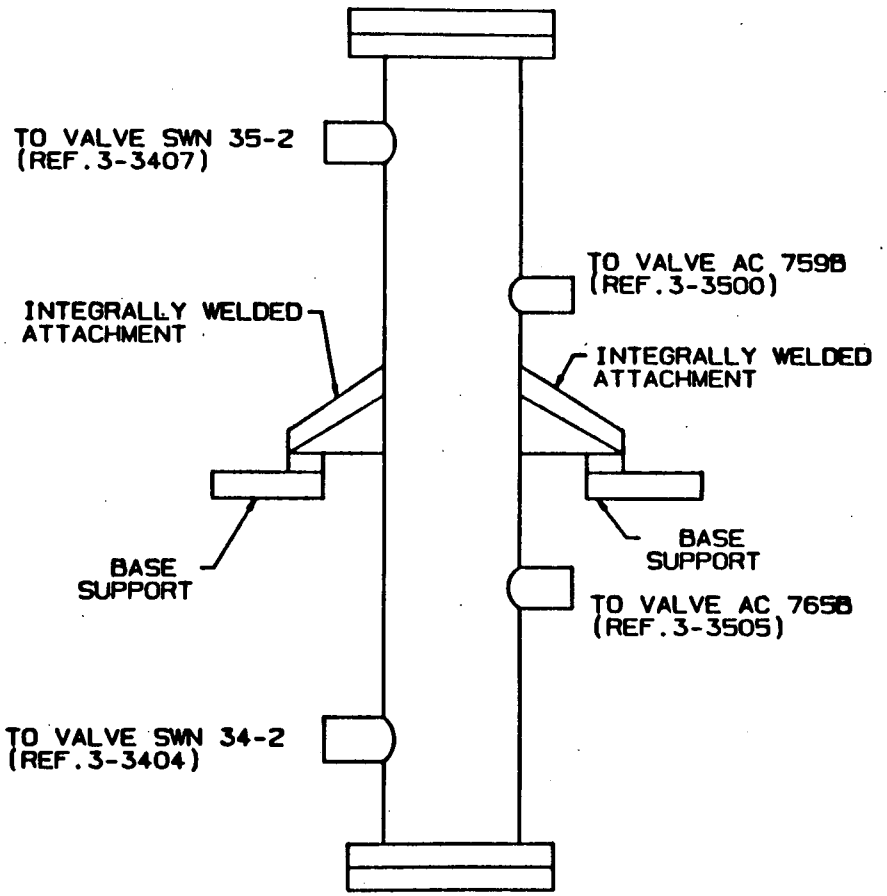

NEW YORK POWER AUTHORITY INDIAN POINT UNIT NO.3	
COMPONENT COOLING HEAT EXCHANGER ACAHCC1-31 COMPONENT COOLING HEAT EXCHANGER ACAHCC2-32	
INT-3-1140	REV. 1

EXCESS LETDOWN HEAT EXCHANGER CSAHEL1-31

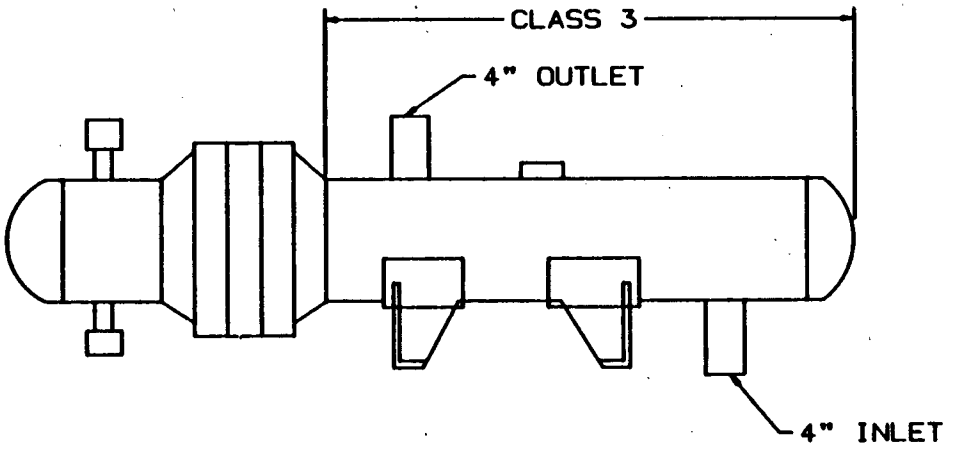

NEW YORK POWER AUTHORITY INDIAN POINT UNIT NO.3	
EXCESS LETDOWN HEAT EXCHANGER CSAHEL1-31	
INT-3-1150	REV. 0

DIESEL GENERATOR 31

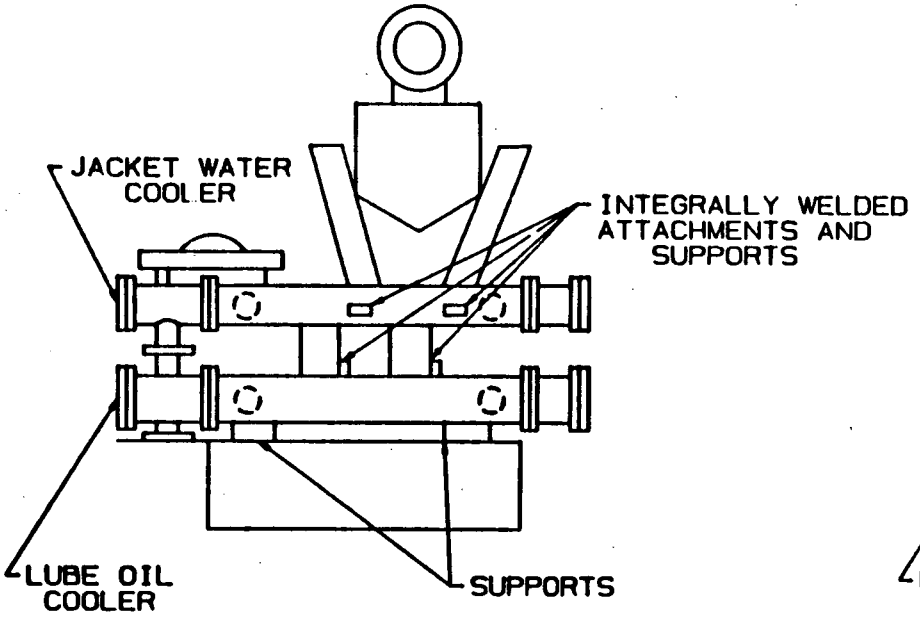

DIESEL GENERATOR 32

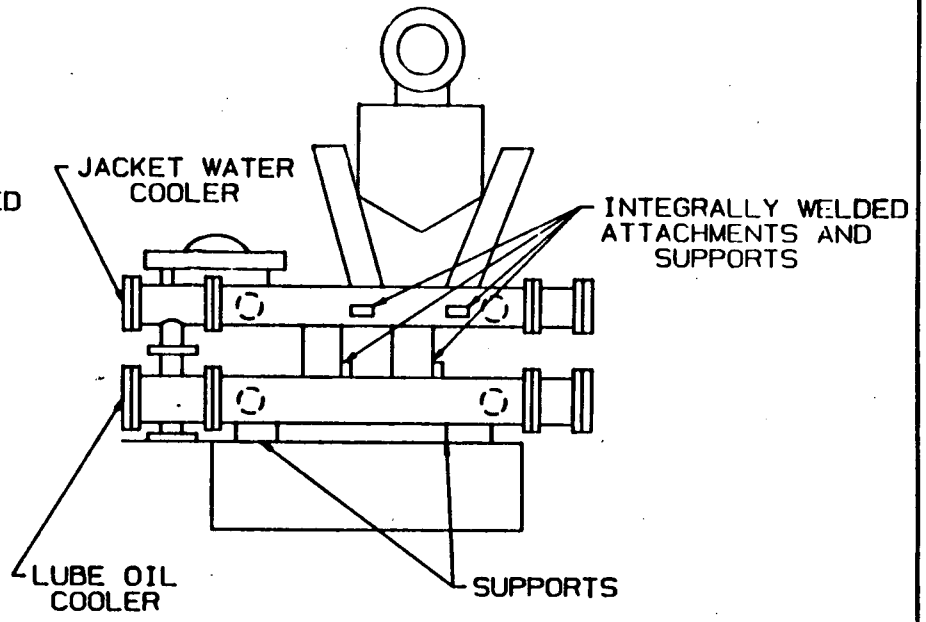

DIESEL GENERATOR 33

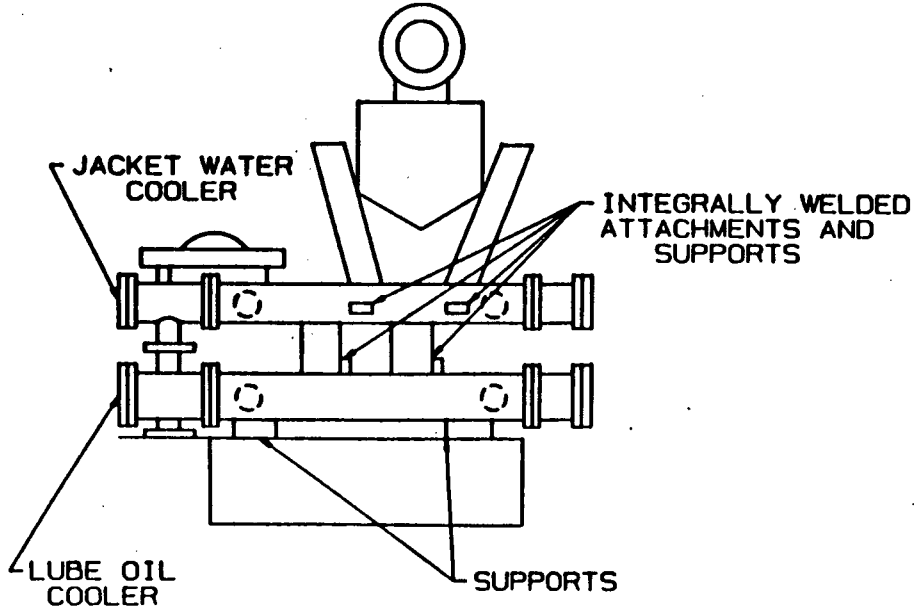

LOCATION: DIESEL GENERATOR ROOM
15' TURBINE BUILDING

NEW YORK POWER AUTHORITY INDIAN POINT UNIT NO. 3	
DIESEL GENERATORS 31, 32 & 33 LUBE OIL COOLERS AND JACKET WATER COOLERS	
INT-3-1160	REV. 1

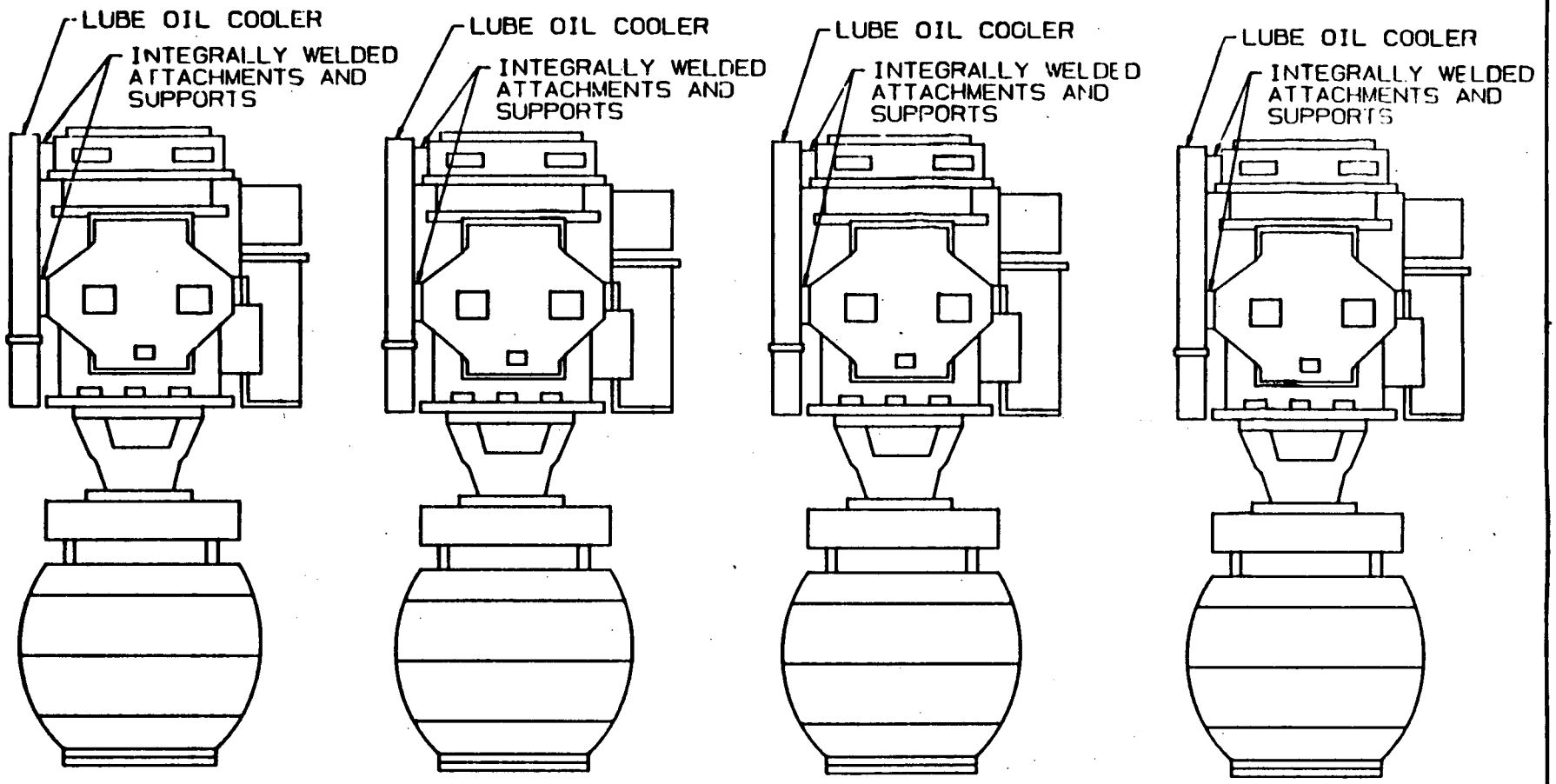

REACTOR COOLANT PUMP RCPCPC1-31

REACTOR COOLANT PUMP RCPCPC2-32

REACTOR COOLANT PUMP RCPCPC3-33

REACTOR COOLANT PUMP RCPCPC4-34

NEW YORK POWER AUTHORITY INDIAN POINT UNIT NO.3	
REACTOR COOLANT PUMPS RCPCPC1-31, RCPCPC2-32, RCPCPC3-33 & RCPCPC4-34 LUBE OIL COOLERS	
INT-3-1170	REV. 1

COOLING WATER HEAT EXCHANGER 31

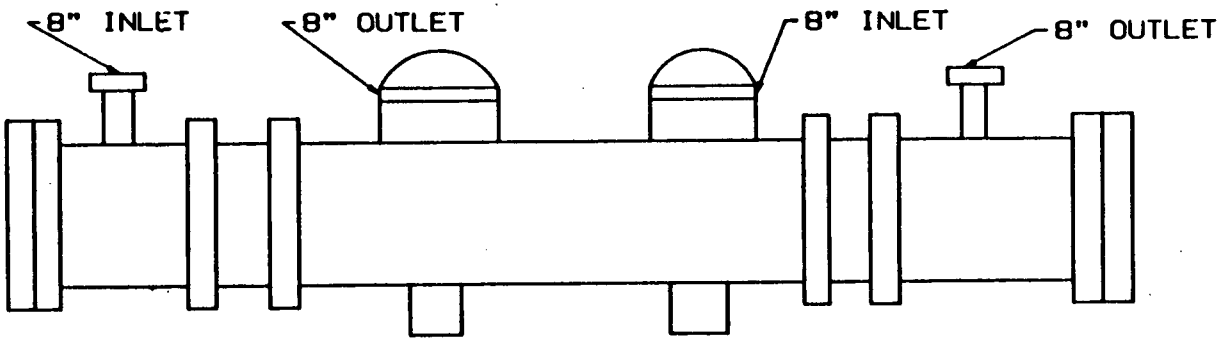

COOLING WATER HEAT EXCHANGER 32

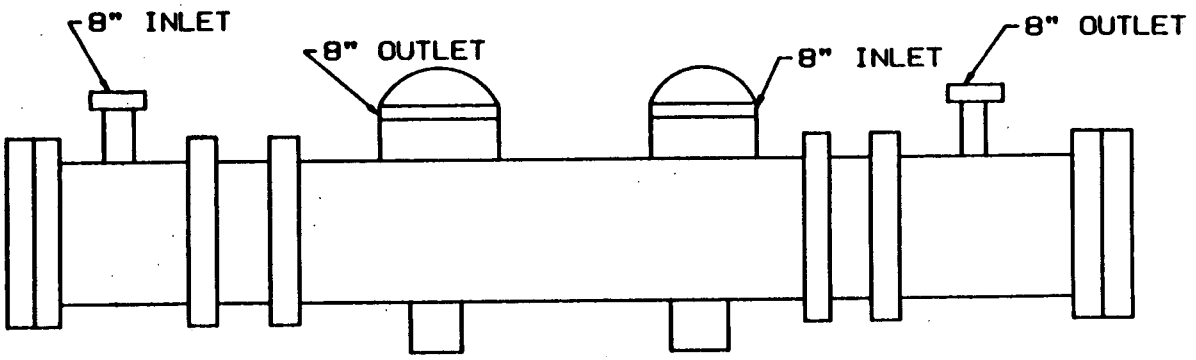

NEW YORK POWER AUTHORITY INDIAN POINT UNIT NO.3	
COOLING WATER HEAT EXCHANGERS 31 & 32	
INT-3-1180	REV. 0

RESIDUAL HEAT REMOVAL PUMP
ACAPRH1-31

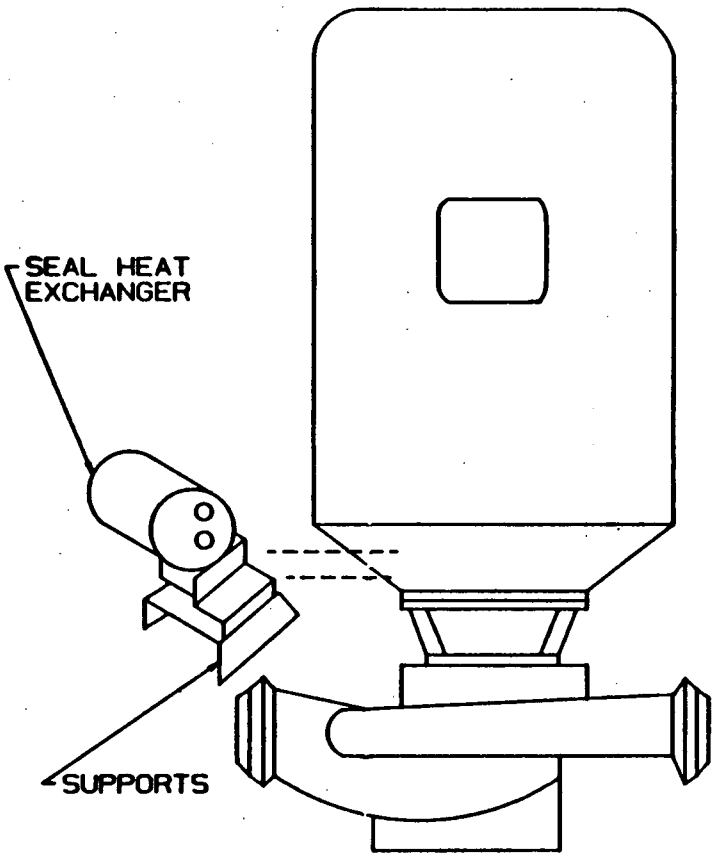

RESIDUAL HEAT REMOVAL PUMP
ACAPRH2-32

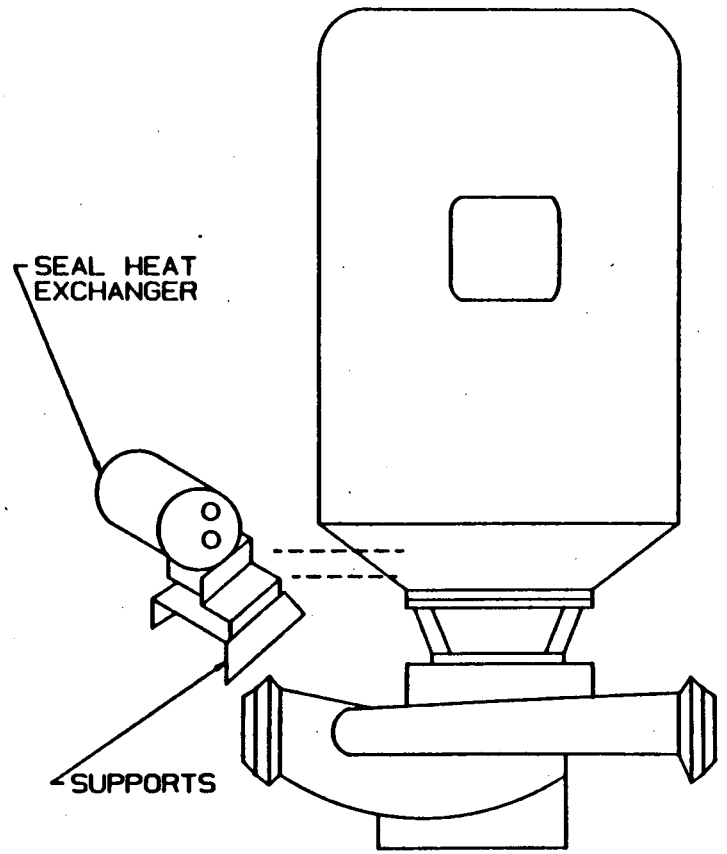

NEW YORK POWER AUTHORITY INDIAN POINT UNIT NO.3	
RESIDUAL HEAT REMOVAL PUMPS ACAPRH1-31 & ACAPRH2-32 SEAL HEAT EXCHANGERS	
INT-3-1190	REV. 0

BORIC ACID TANK CSATBA1-31

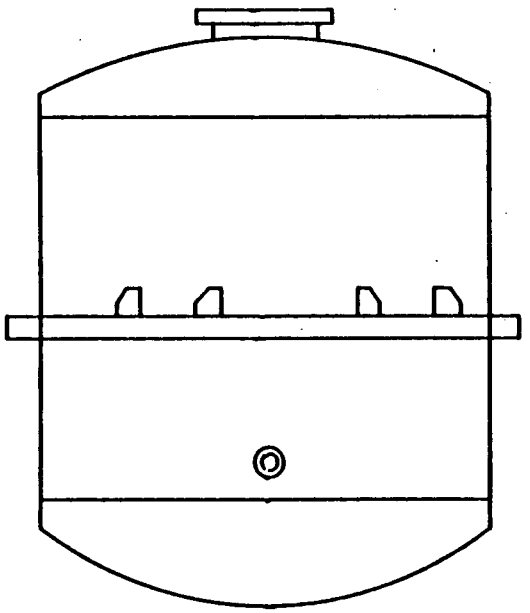

BORIC ACID TANK CSATBA2-32

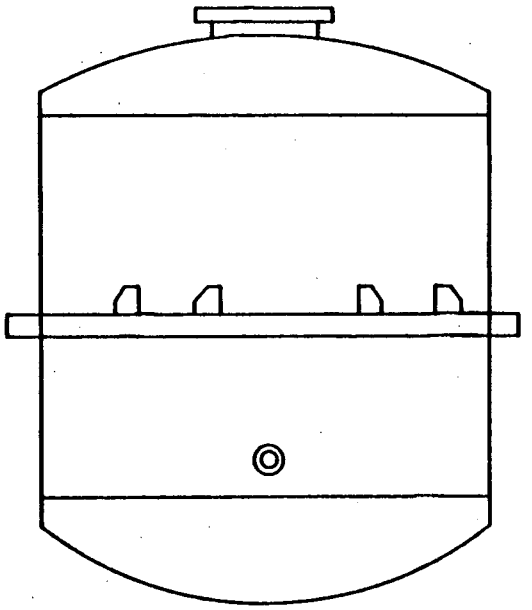

NEW YORK POWER AUTHORITY INDIAN POINT UNIT NO. 3	
BORIC ACID TANKS CSATBA1-31 & CSATBA2-32	
INT-3-1200	REV. 0

COMPONENT COOLING SURGE TANK ACATCC1-31

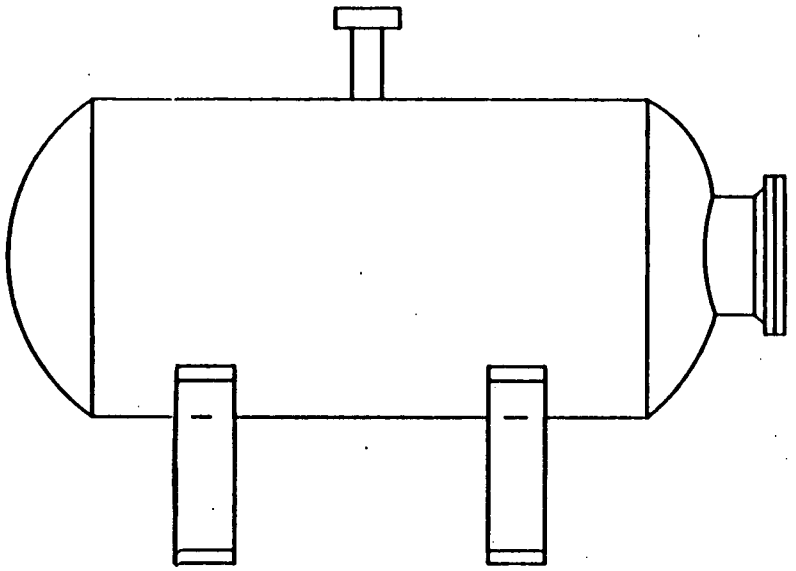

COMPONENT COOLING SURGE TANK ACATCC2-32

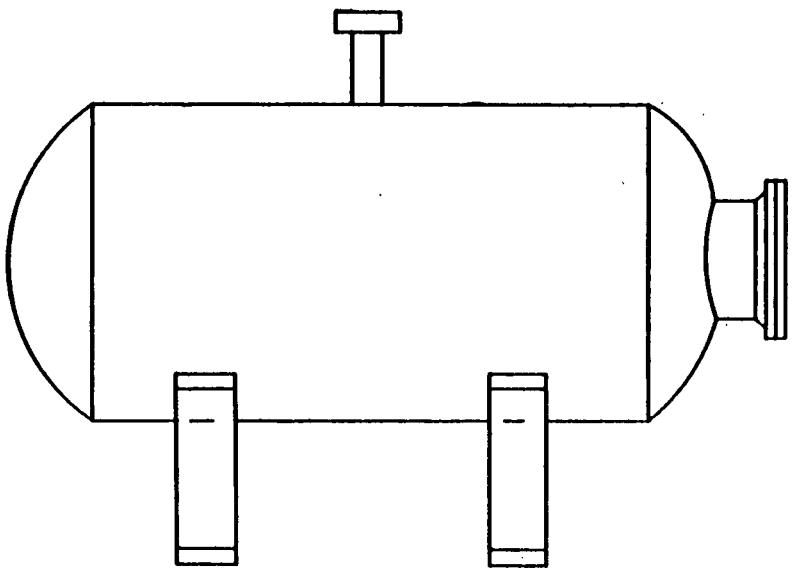

NEW YORK POWER AUTHORITY INDIAN POINT UNIT NO.3	
COMPONENT COOLING SURGE TANKS ACATCC1-31 & ACATCC2-32	
INT-3-1210	REV. 0

CONDENSATE STORAGE TANK

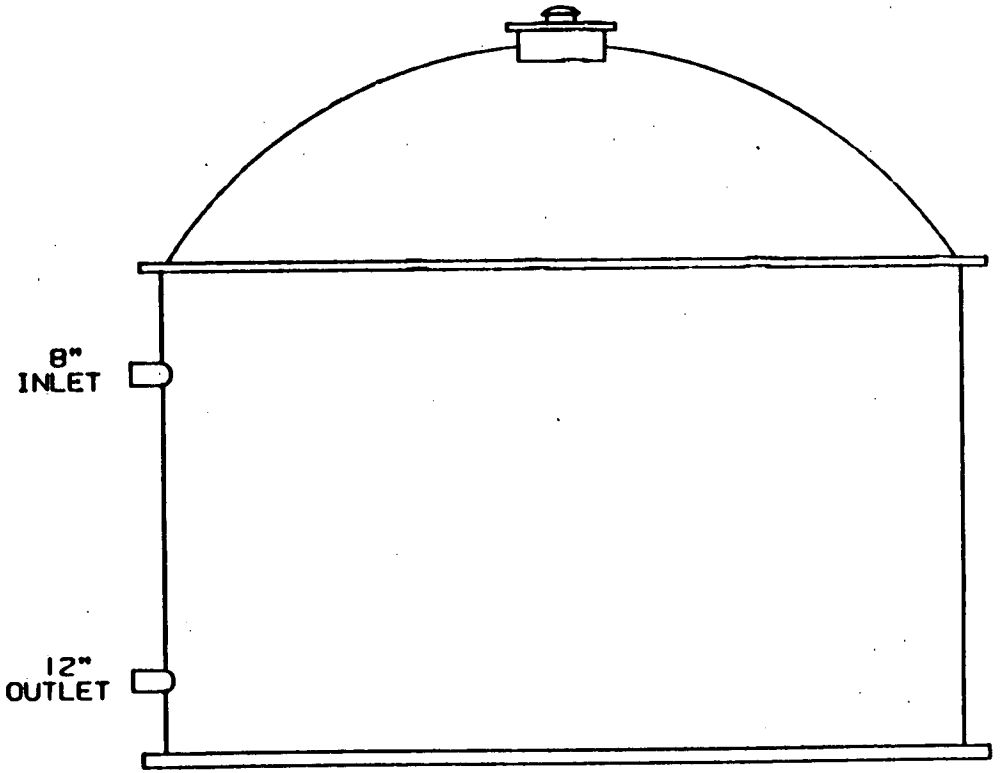

NEW YORK POWER AUTHORITY INDIAN POINT UNIT NO. 3	
CONDENSATE STORAGE TANK	
INT-3-1230	REV. 0

BORIC ACID FILTER CSFLBA1-31

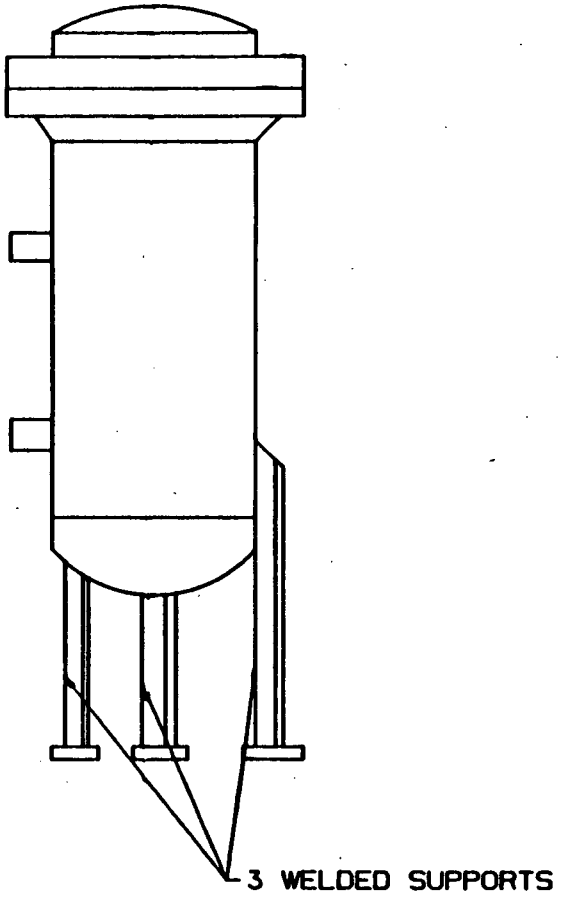

BORIC ACID BLENDER CSBLBA1•

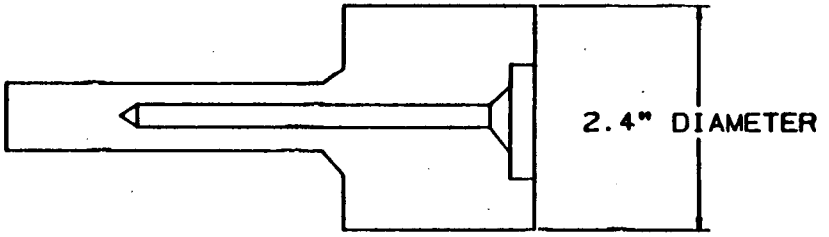

• LESS THAN 4" DIAMETER (SUPPORTS IF APPLICABLE NOT REQUIRED FOR EXAMINATION)

NEW YORK POWER AUTHORITY INDIAN POINT UNIT NO.3	
BORIC ACID FILTER CSFLBA1-31 & BORIC ACID BLENDER CSBLBA1	
INT-3-1300	REV. 0

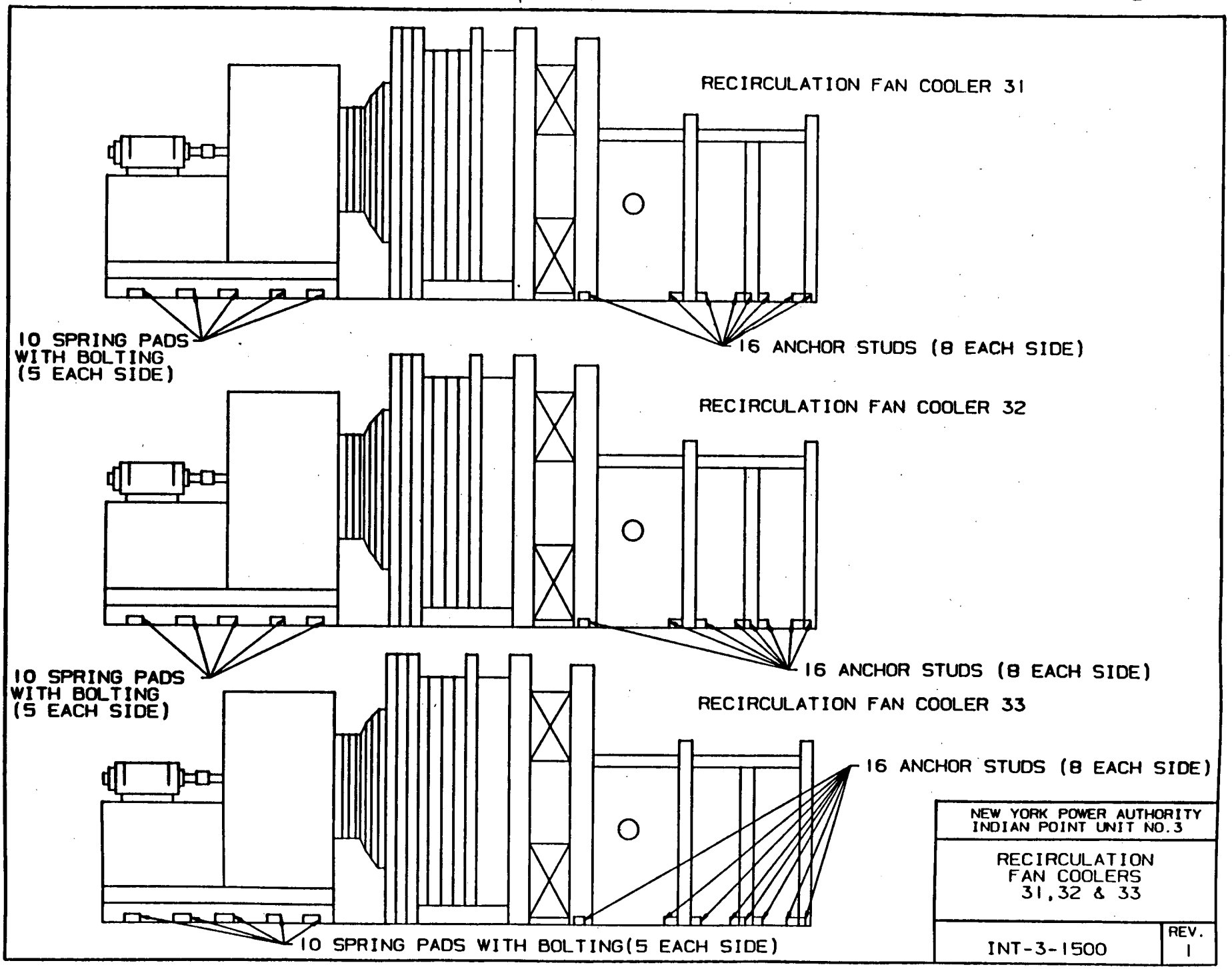
RECIRCULATION FAN COOLER 31
10 SPRING PADS WITH BOLTING (5 EACH SIDE)
16 ANCHOR STUDS (8 EACH SIDE)
RECIRCULATION FAN COOLER 32
10 SPRING PADS WITH BOLTING (5 EACH SIDE)
16 ANCHOR STUDS (8 EACH SIDE)
RECIRCULATION FAN COOLER 33
16 ANCHOR STUDS (8 EACH SIDE)
10 SPRING PADS WITH BOLTING(5 EACH SIDE)
NEW YORK POWER AUTHORITY
INDIAN POINT UNIT NO.3
RECIRCULATION FAN COOLERS 31,32 & 33
INT-3-1500
REV. 1

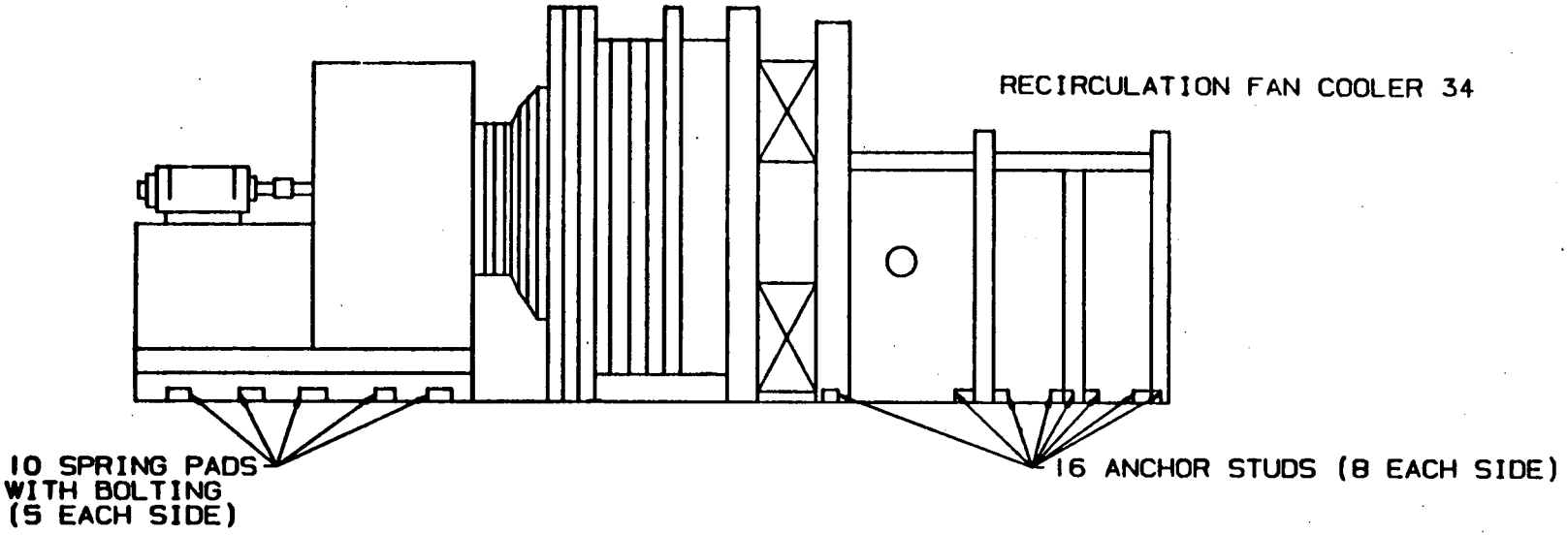

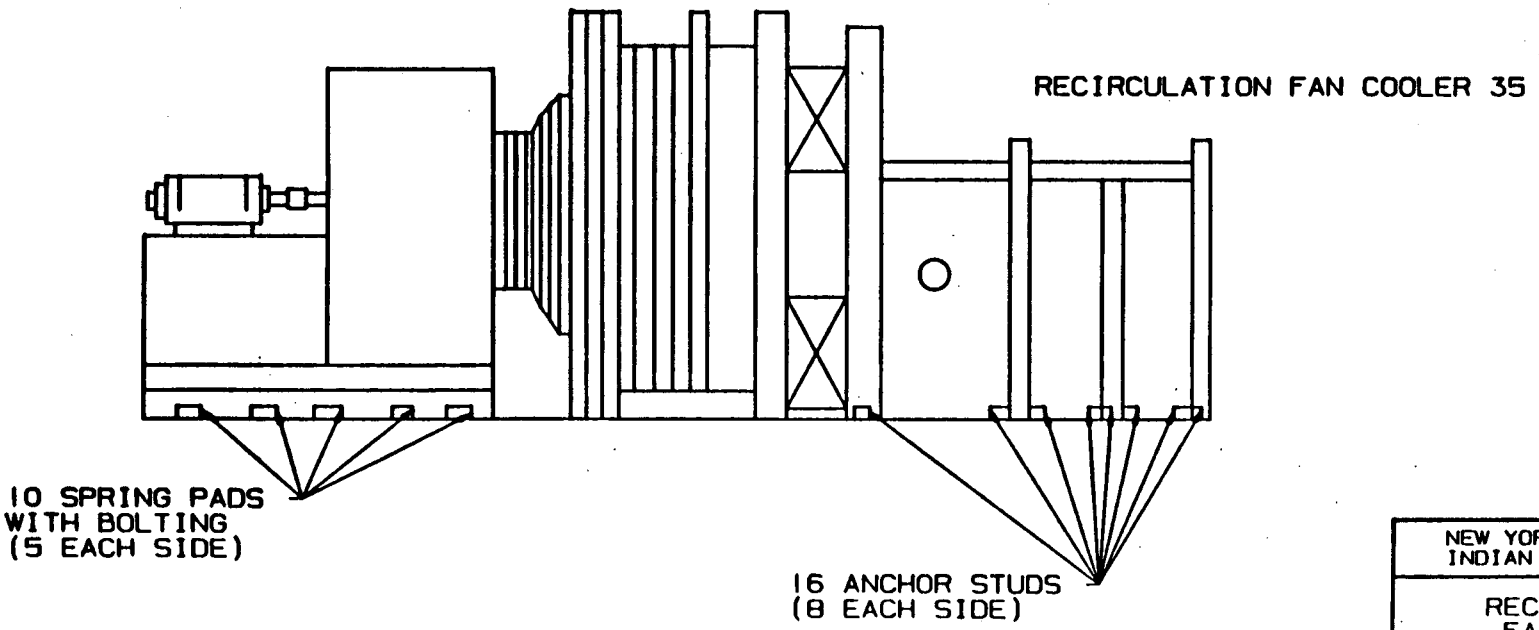

NEW YORK POWER AUTHORITY INDIAN POINT UNIT NO.3	
RECIRCULATION FAN COOLERS 34 & 35	
INT-3-1510	REV. 1

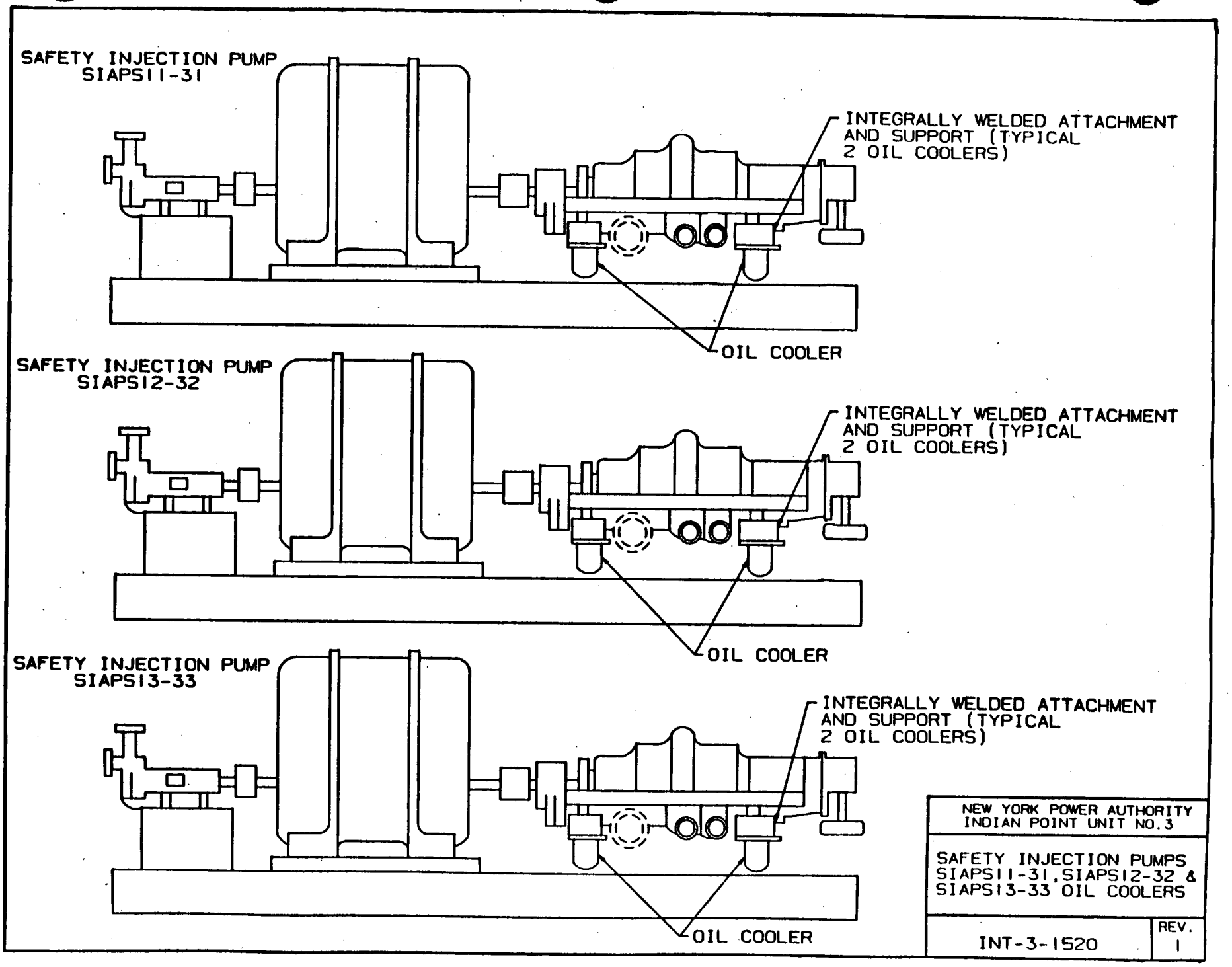
SAFETY INJECTION PUMP
SIAPS11-31
INTEGRALLY WELDED ATTACHMENT
AND SUPPORT (TYPICAL
2 OIL COOLERS)
OIL COOLER
SAFETY INJECTION PUMP
SIAPS12-32
INTEGRALLY WELDED ATTACHMENT
AND SUPPORT (TYPICAL
2 OIL COOLERS)
OIL COOLER
SAFETY INJECTION PUMP
SIAPS13-33
INTEGRALLY WELDED ATTACHMENT
AND SUPPORT (TYPICAL
2 OIL COOLERS)
OIL COOLER
NEW YORK POWER AUTHORITY
INDIAN POINT UNIT NO.3
SAFETY INJECTION PUMPS
SIAPS11-31, SIAPS12-32 &
SIAPS13-33 OIL COOLERS
INT-3-1520
REV.
1

CHARGING PUMP CSAPCH1-31

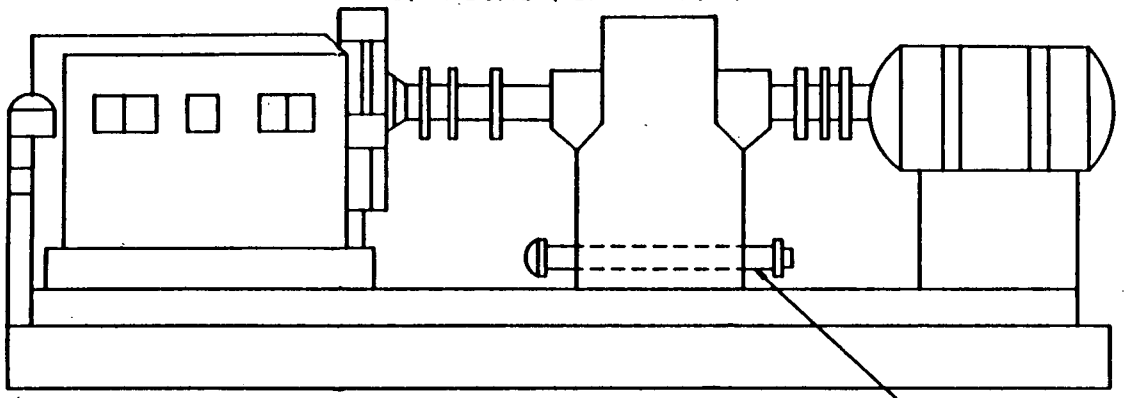

CHARGING PUMP CSAPCH2-32

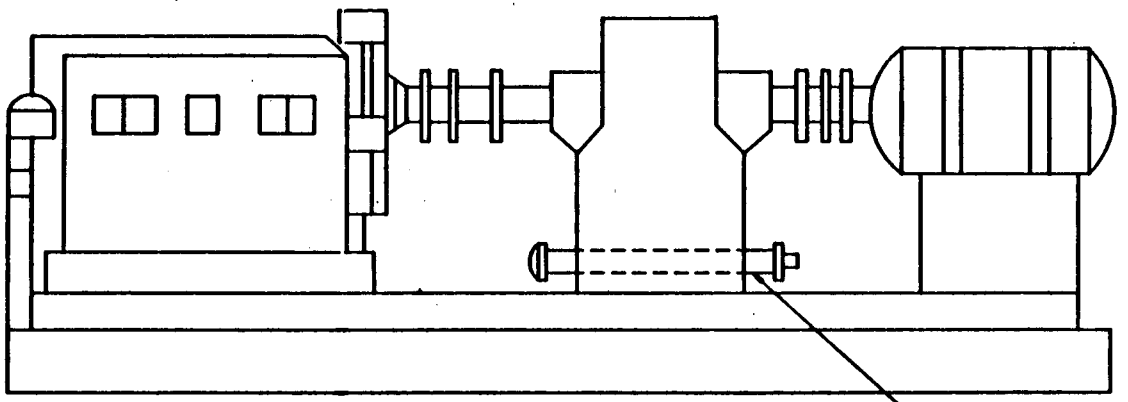

CHARGING PUMP CSAPCH3-33

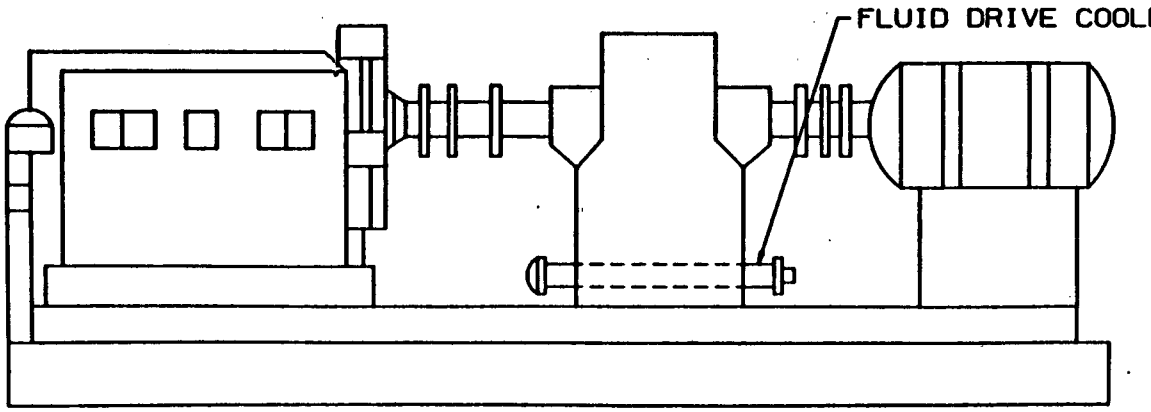

NEW YORK POWER AUTHORITY INDIAN POINT UNIT NO. 3	
CHARGING PUMPS CSAPCH1-31, CSAPCH2-32 & CSAPCH3-33 FLUID DRIVE COOLERS	
INT-3-1530	REV. 0

RECIRCULATION SPRAY PUMP 31

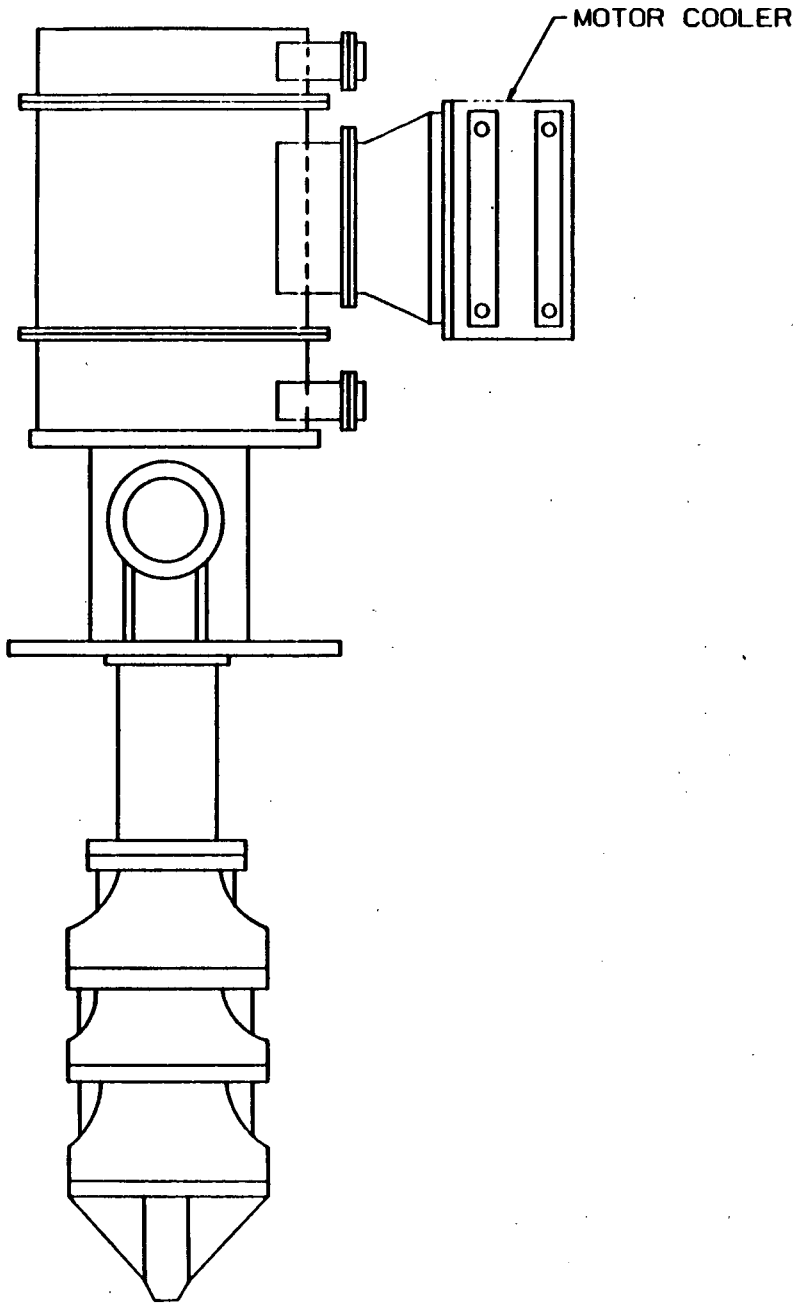

RECIRCULATION SPRAY PUMP 32

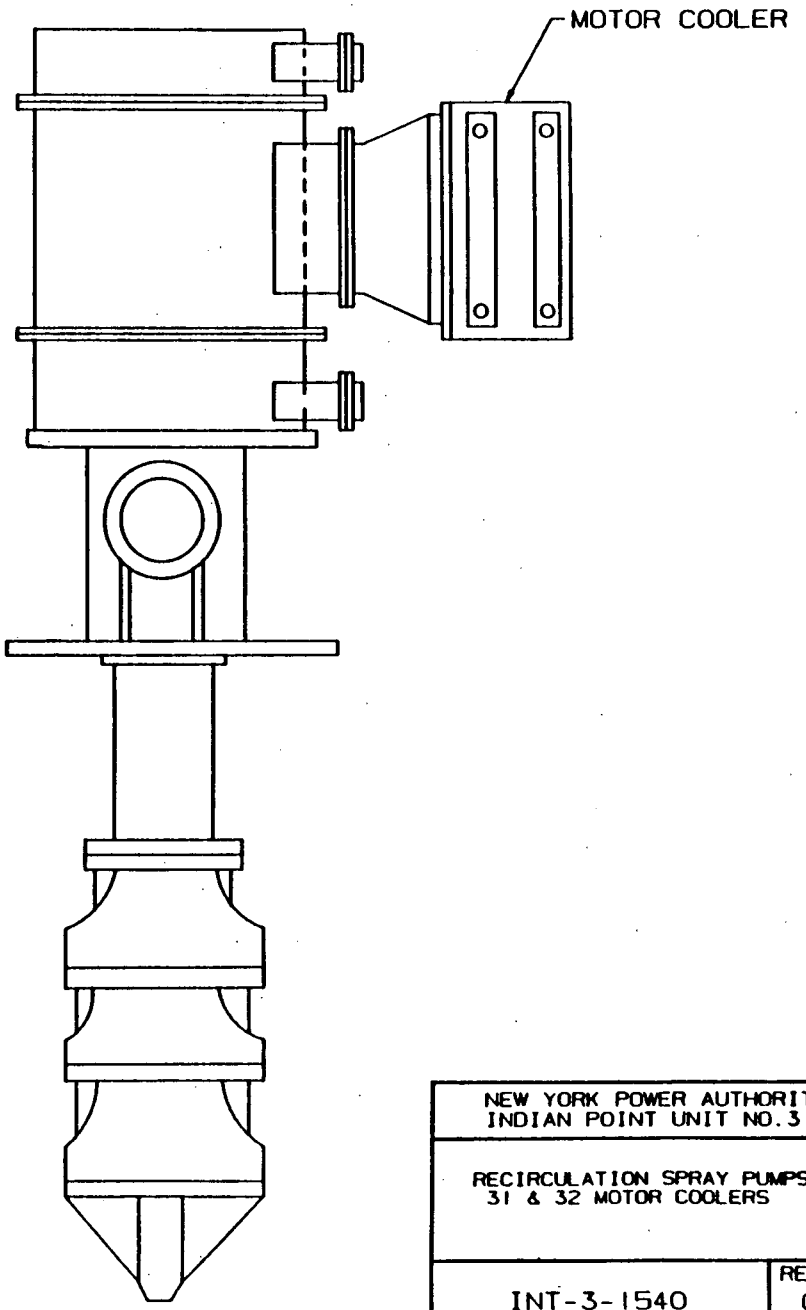

NEW YORK POWER AUTHORITY INDIAN POINT UNIT NO.3	
RECIRCULATION SPRAY PUMPS 31 & 32 MOTOR COOLERS	
INT-3-1540	REV. 0

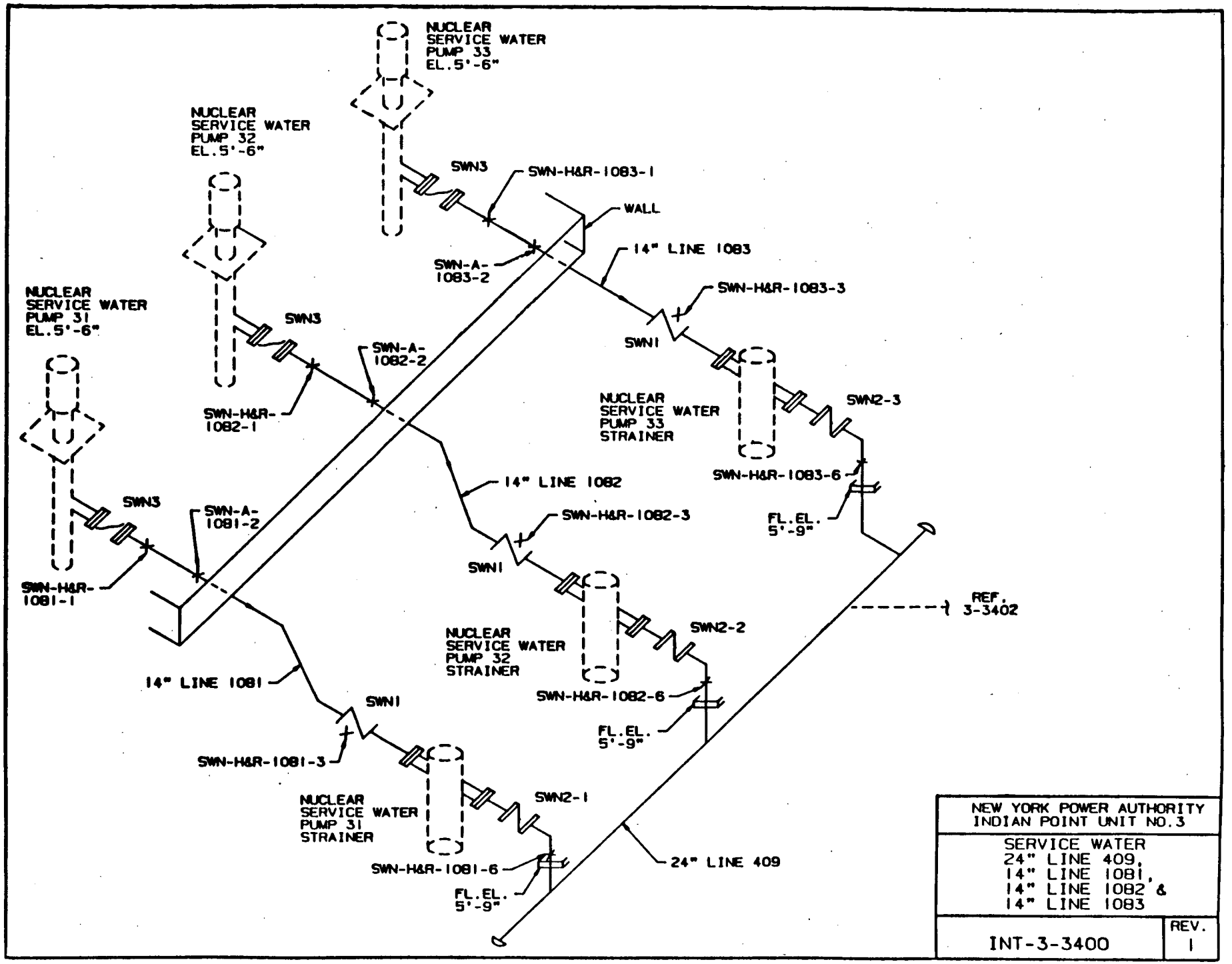

NEW YORK POWER AUTHORITY INDIAN POINT UNIT NO.3	
SERVICE WATER 24" LINE 409, 14" LINE 1081, 14" LINE 1082 & 14" LINE 1083	
INT-3-3400	REV. 1

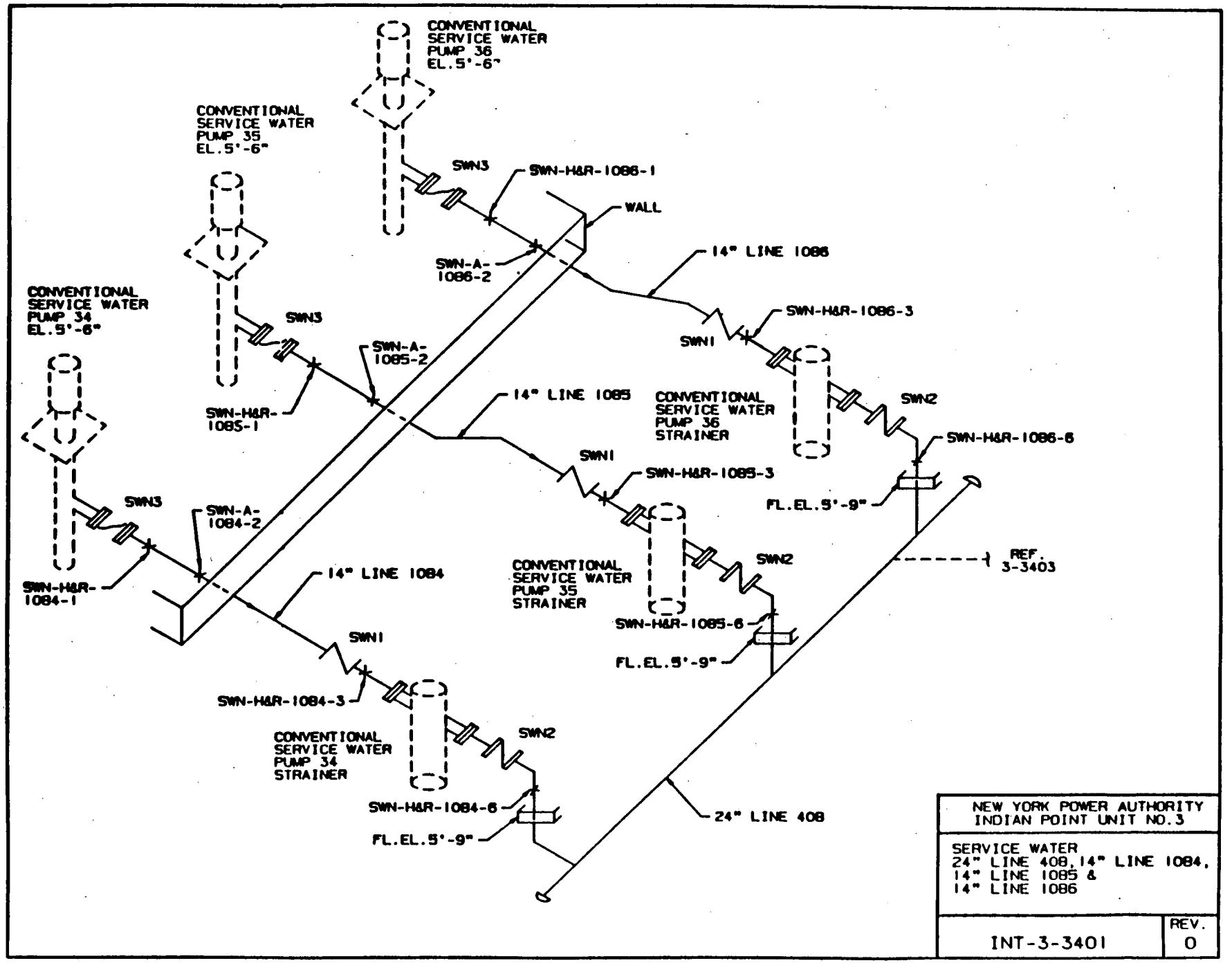

NEW YORK POWER AUTHORITY
INDIAN POINT UNIT NO.3

SERVICE WATER
24" LINE 408, 14" LINE 1084,
14" LINE 1085 &
14" LINE 1086

INT-3-3401

REV. 0

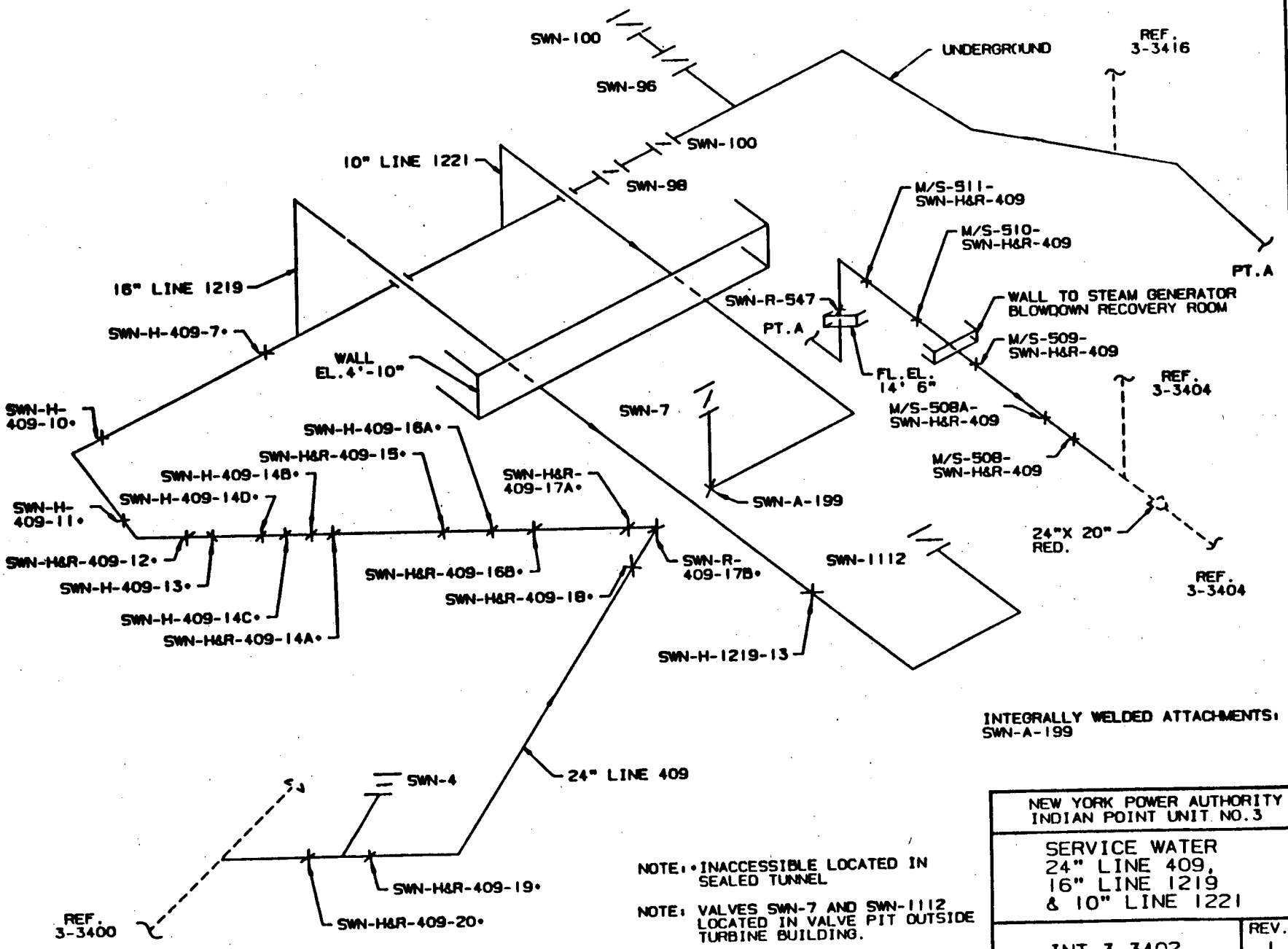
SWN-100
SWN-96
SWN-100
SWN-98
UNDERGROUND
REF. 3-3416
10" LINE 1221
16" LINE 1219
SWN-H-409-7•
WALL EL.4'-10"
M/S-511-SWN-H&R-409
M/S-510-SWN-H&R-409
PT.A
SWN-R-547
PT.A
WALL TO STEAM GENERATOR BLOWDOWN RECOVERY ROOM
M/S-509-SWN-H&R-409
FL.EL. 14' 6"
REF. 3-3404
M/S-508A-SWN-H&R-409
M/S-508-SWN-H&R-409
SWN-7
SWN-A-199
SWN-H-409-10•
SWN-H-409-16A•
SWN-H&R-409-15•
SWN-H-409-14B•
SWN-H-409-14D•
SWN-H-409-11•
SWN-H&R-409-17A•
SWN-H&R-409-12•
SWN-H-409-13•
SWN-H-409-14C•
SWN-H&R-409-14A•
SWN-H&R-409-16B•
SWN-H&R-409-18•
SWN-R-409-17B•
SWN-1112
24"X 20" RED.
REF. 3-3404
SWN-H-1219-13
INTEGRALLY WELDED ATTACHMENTS: SWN-A-199
24" LINE 409
SWN-4
SWN-H&R-409-19•
SWN-H&R-409-20•
REF. 3-3400
NOTE: • INACCESSIBLE LOCATED IN SEALED TUNNEL
NOTE: VALVES SWN-7 AND SWN-1112 LOCATED IN VALVE PIT OUTSIDE TURBINE BUILDING.
NEW YORK POWER AUTHORITY
INDIAN POINT UNIT NO.3
SERVICE WATER
24" LINE 409,
16" LINE 1219
& 10" LINE 1221
INT-3-3402
REV. 1

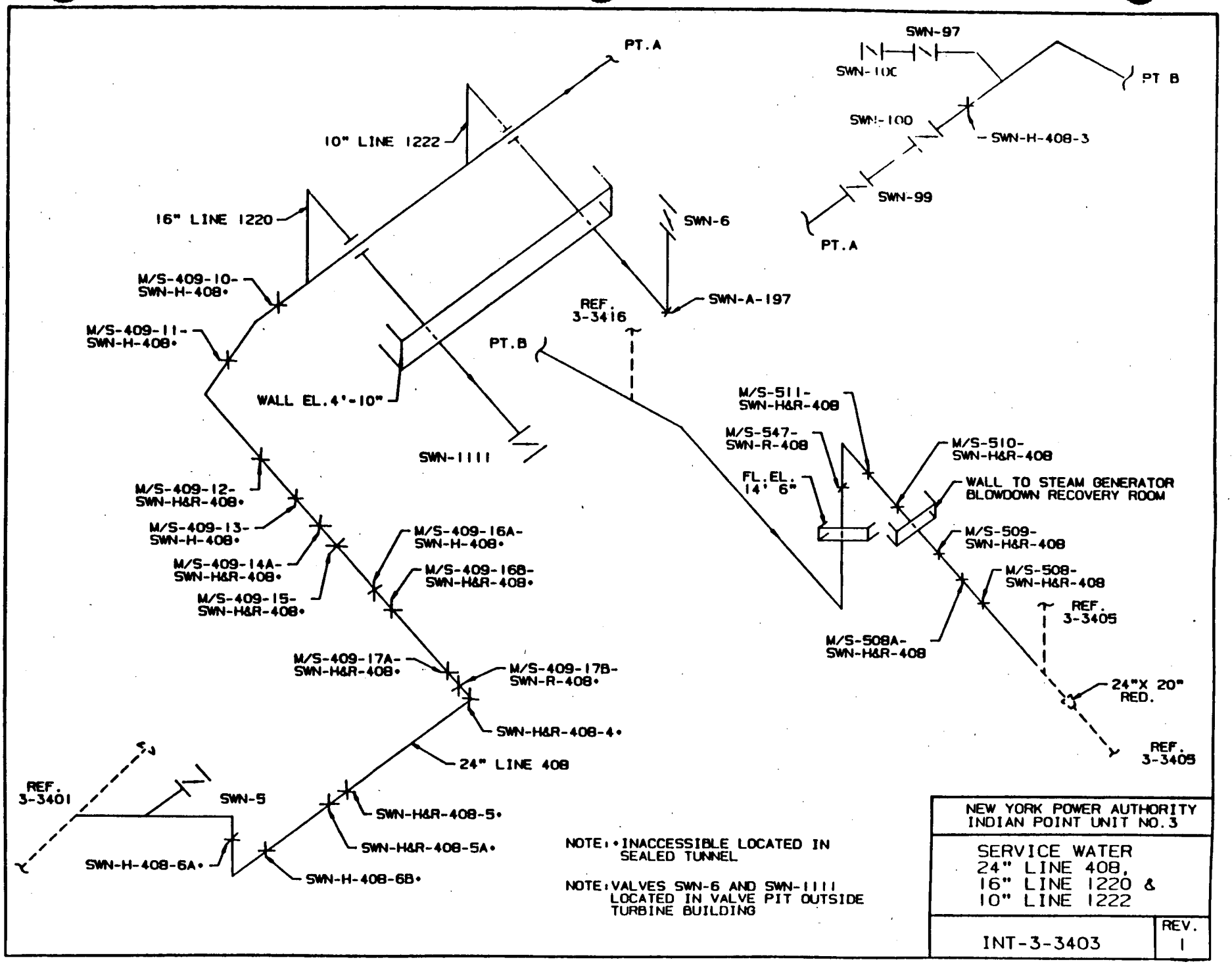

NOTE: • INACCESSIBLE LOCATED IN SEALED TUNNEL

NOTE: VALVES SWN-6 AND SWN-1111 LOCATED IN VALVE PIT OUTSIDE TURBINE BUILDING

NEW YORK POWER AUTHORITY INDIAN POINT UNIT NO.3	
SERVICE WATER 24" LINE 408, 16" LINE 1220 & 10" LINE 1222	
INT-3-3403	REV. 1

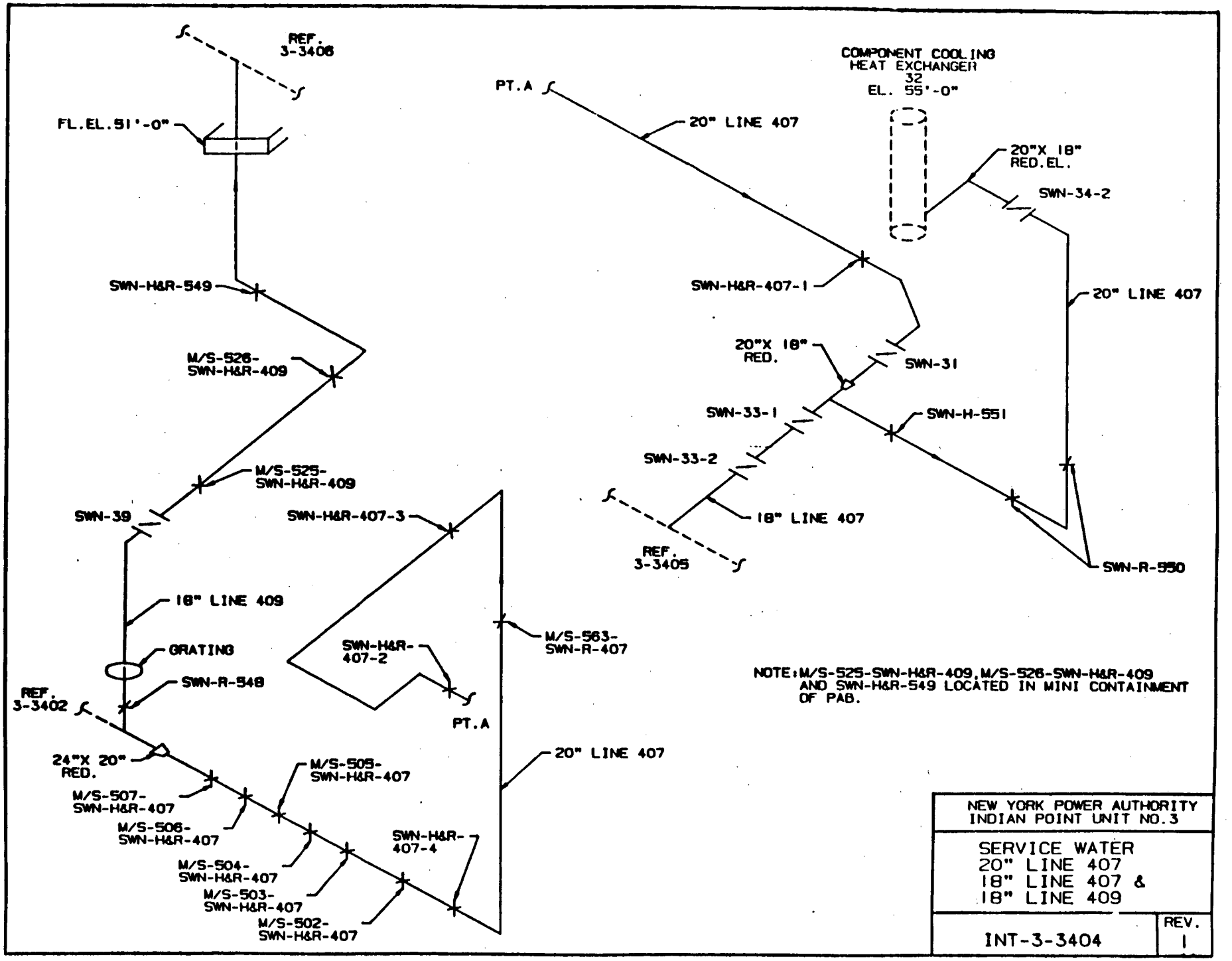
REF. 3-3406
FL.EL.51'-0"
SWN-H&R-549
M/S-526-SWN-H&R-409
M/S-525-SWN-H&R-409
SWN-39
18" LINE 409
GRATING
SWN-R-548
REF. 3-3402
24"X 20" RED.
M/S-507-SWN-H&R-407
M/S-506-SWN-H&R-407
M/S-504-SWN-H&R-407
M/S-503-SWN-H&R-407
M/S-502-SWN-H&R-407
M/S-505-SWN-H&R-407
SWN-H&R-407-4
SWN-H&R-407-3
SWN-H&R-407-2
PT.A
M/S-563-SWN-R-407
20" LINE 407
PT.A
20" LINE 407
COMPONENT COOLING HEAT EXCHANGER 32 EL. 55'-0"
20"X 18" RED.EL.
SWN-34-2
SWN-H&R-407-1
20" LINE 407
20"X 18" RED.
SWN-31
SWN-33-1
SWN-H-551
SWN-33-2
18" LINE 407
REF. 3-3405
SWN-R-550
NOTE: M/S-525-SWN-H&R-409, M/S-526-SWN-H&R-409 AND SWN-H&R-549 LOCATED IN MINI CONTAINMENT OF PAB.
NEW YORK POWER AUTHORITY
INDIAN POINT UNIT NO.3
SERVICE WATER
20" LINE 407
18" LINE 407 &
18" LINE 409
INT-3-3404
REV.
1

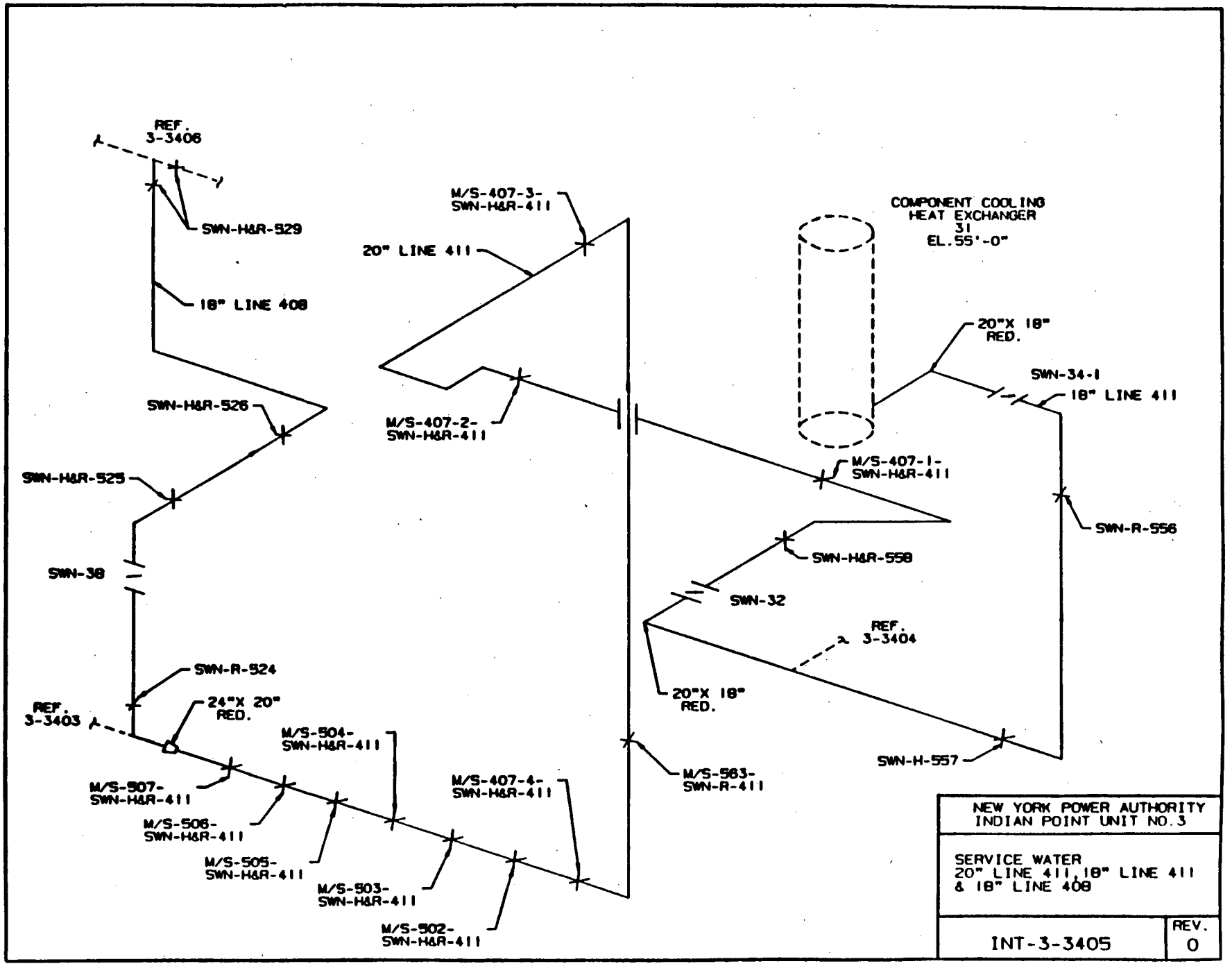
REF.
3-3406
SWN-H&R-529
18" LINE 408
SWN-H&R-526
SWN-H&R-525
SWN-38
SWN-R-524
REF.
3-3403
24"X 20"
RED.
M/S-507-
SWN-H&R-411
M/S-506-
SWN-H&R-411
M/S-505-
SWN-H&R-411
M/S-504-
SWN-H&R-411
M/S-503-
SWN-H&R-411
M/S-502-
SWN-H&R-411
M/S-407-4-
SWN-H&R-411
M/S-407-3-
SWN-H&R-411
20" LINE 411
M/S-407-2-
SWN-H&R-411
M/S-563-
SWN-R-411
COMPONENT COOLING
HEAT EXCHANGER
31
EL.55'-0"
20"X 18"
RED.
SWN-34-1
18" LINE 411
M/S-407-1-
SWN-H&R-411
SWN-R-556
SWN-H&R-558
SWN-32
REF.
3-3404
20"X 18"
RED.
SWN-H-557
NEW YORK POWER AUTHORITY
INDIAN POINT UNIT NO.3
SERVICE WATER
20" LINE 411, 18" LINE 411
& 18" LINE 408
INT-3-3405
REV.
0

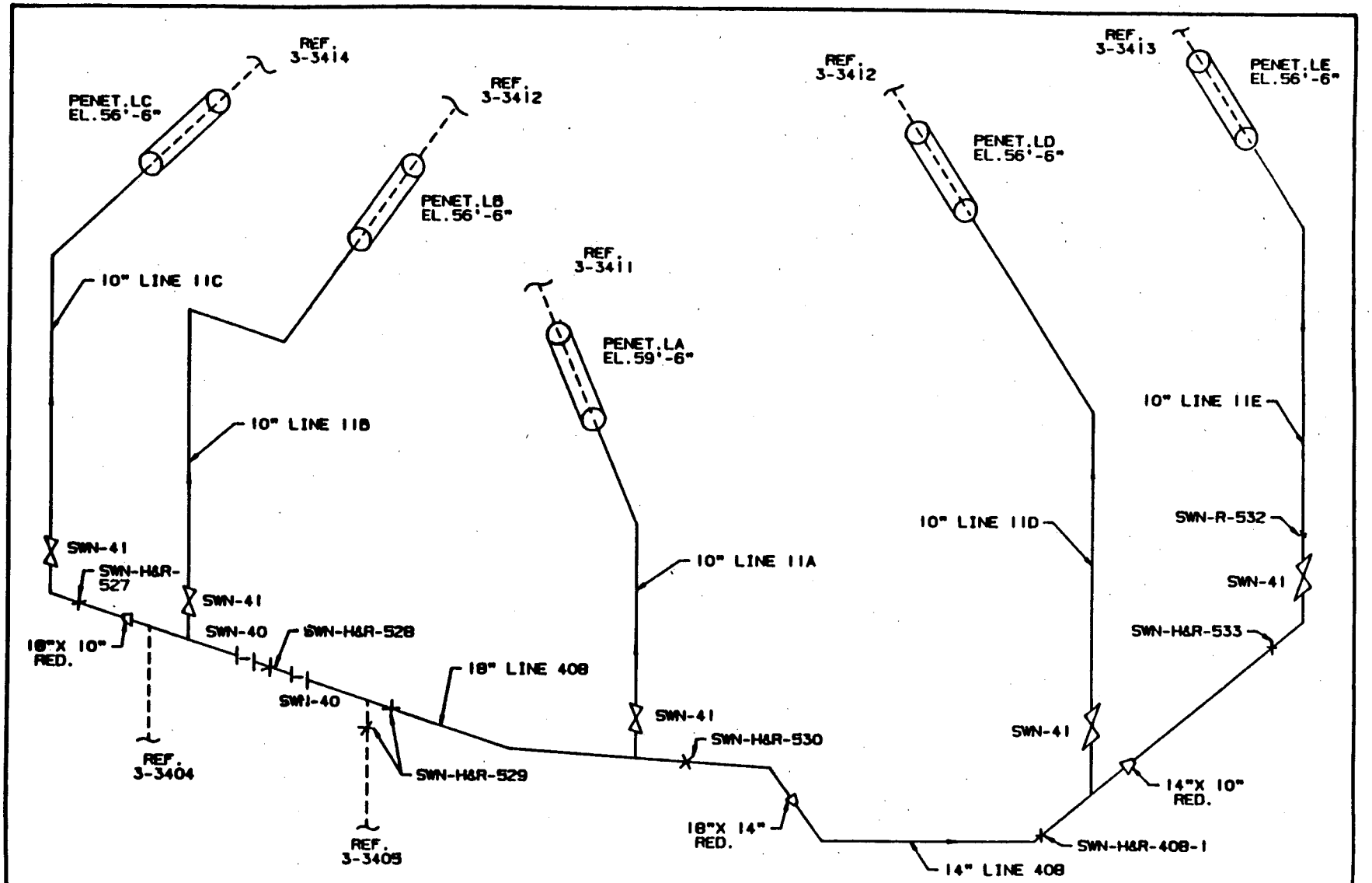

NEW YORK POWER AUTHORITY
INDIAN POINT UNIT NO.3

SERVICE WATER
18" LINE 408, 14" LINE 408,
10" LINE 11A, 10" LINE 11B,
10" LINE 11C, 10" LINE 11D
& 10" LINE 11E

INT-3-3406

REV. 0

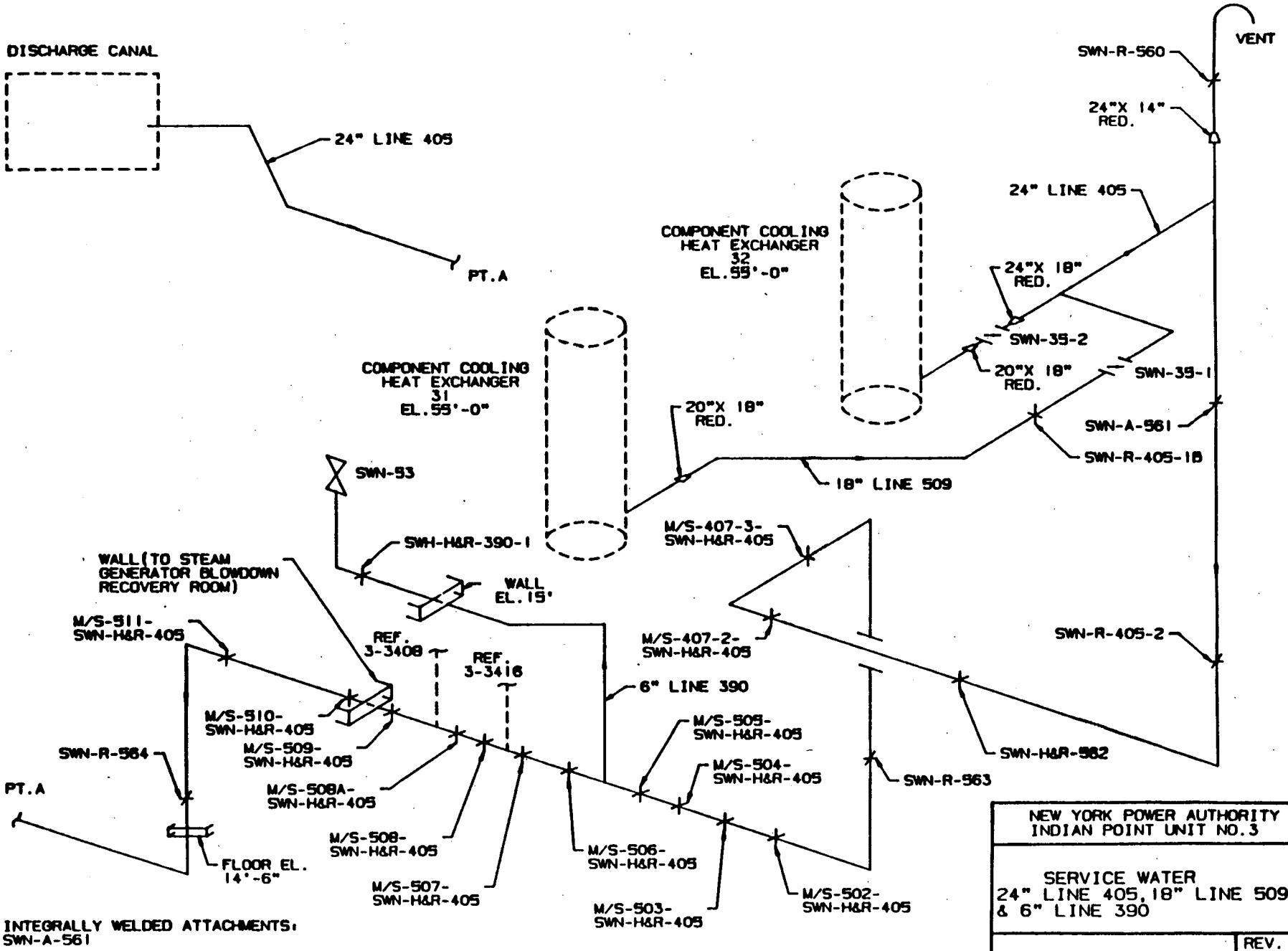

NEW YORK POWER AUTHORITY
INDIAN POINT UNIT NO.3

SERVICE WATER
24" LINE 405, 18" LINE 509
& 6" LINE 390

INT-3-3407

REV. 1

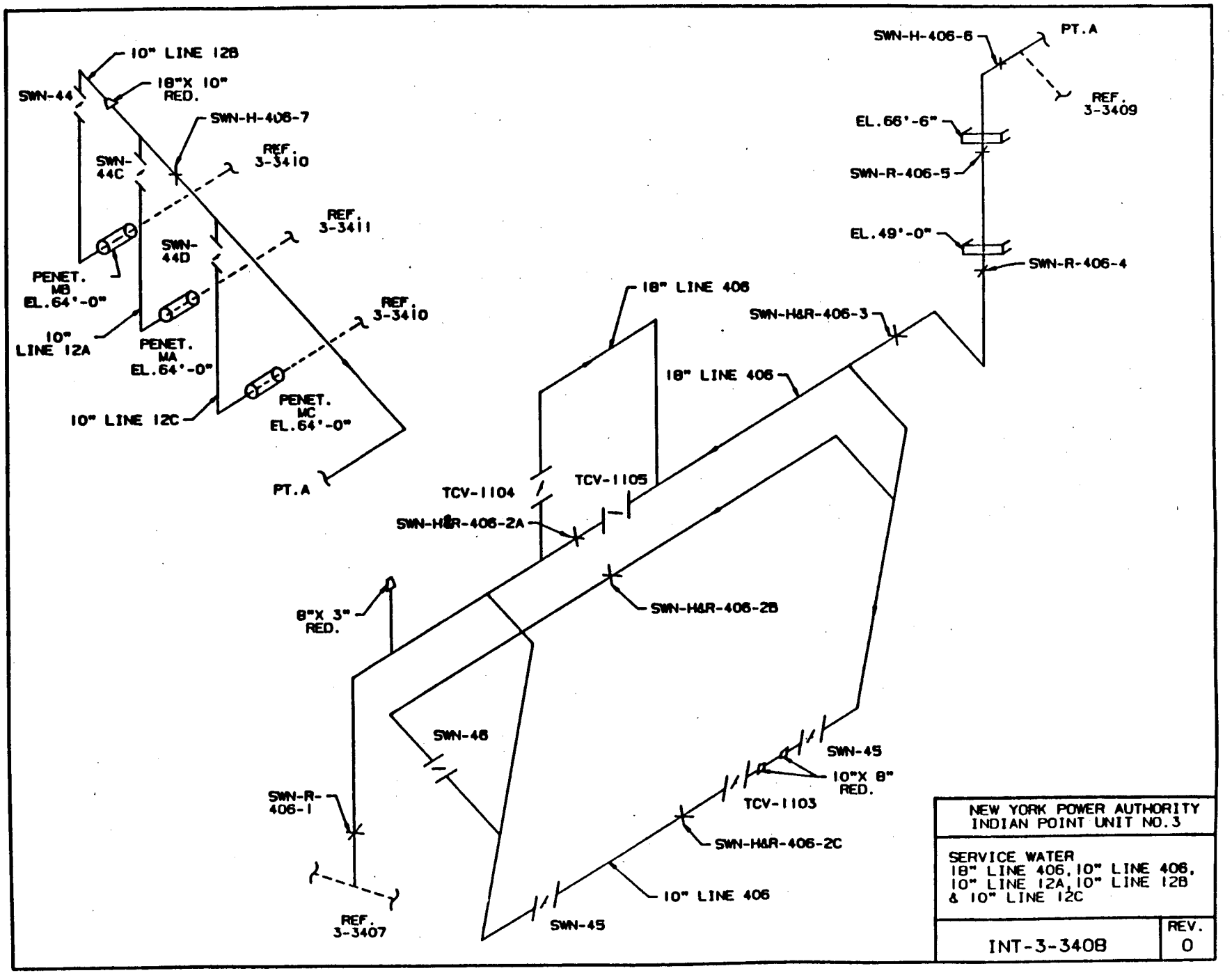
10" LINE 12B
18"X 10" RED.
SWN-44
SWN-H-406-7
REF. 3-3410
SWN-44C
REF. 3-3411
SWN-44D
PENET. MB EL.64'-0"
10" LINE 12A
PENET. MA EL.64'-0"
REF. 3-3410
10" LINE 12C
PENET. MC EL.64'-0"
PT.A
SWN-H-406-6
PT.A
REF. 3-3409
EL.66'-6"
SWN-R-406-5
EL.49'-0"
SWN-R-406-4
18" LINE 406
SWN-H&R-406-3
18" LINE 406
TCV-1104
TCV-1105
SWN-H&R-406-2A
SWN-H&R-406-2B
8"X 3" RED.
SWN-46
SWN-45
10"X 8" RED.
TCV-1103
SWN-R-406-1
SWN-H&R-406-2C
10" LINE 406
REF. 3-3407
SWN-45
NEW YORK POWER AUTHORITY
INDIAN POINT UNIT NO.3
SERVICE WATER
18" LINE 406, 10" LINE 406, 10" LINE 12A, 10" LINE 12B & 10" LINE 12C
INT-3-3408
REV.
0

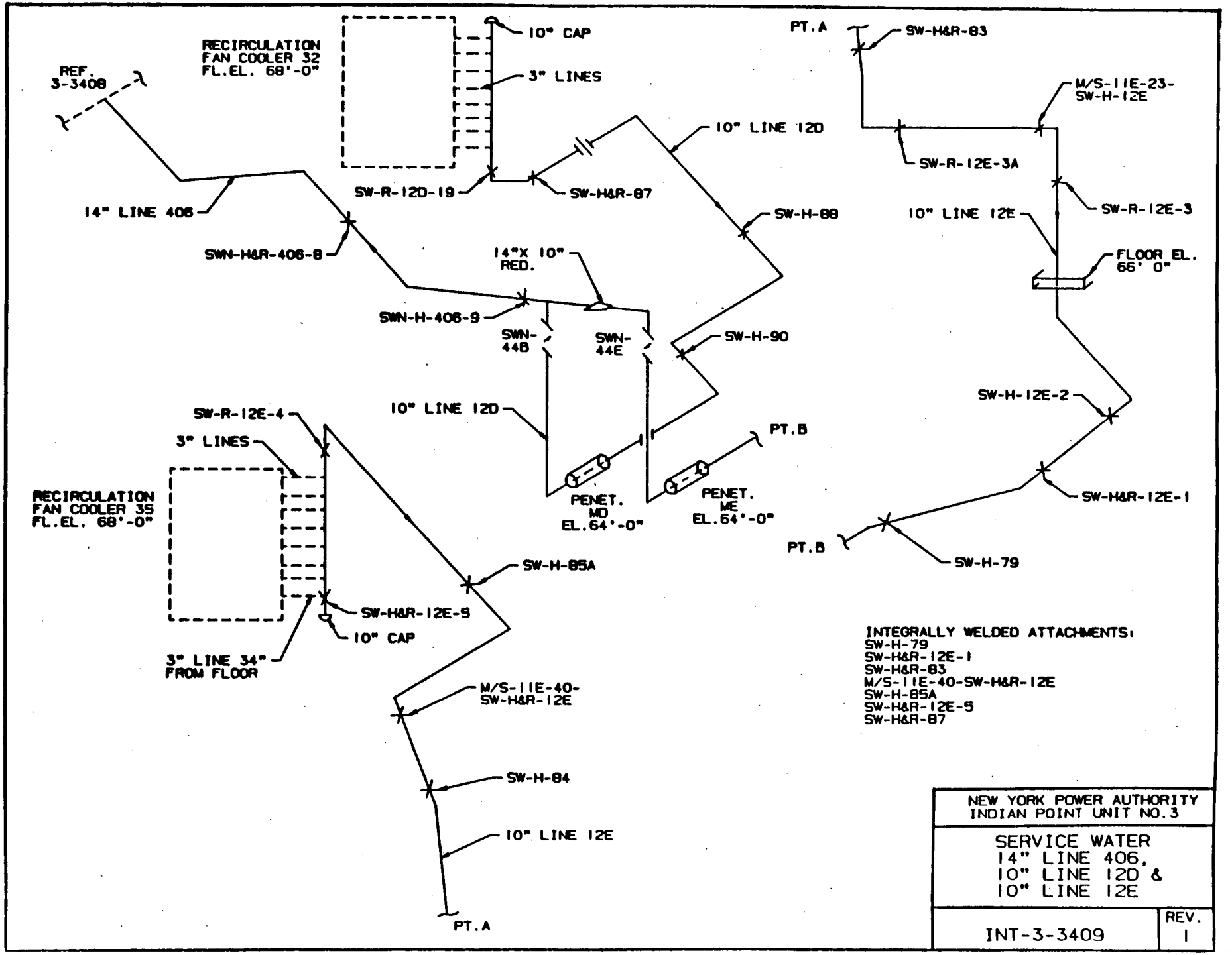
RECIRCULATION FAN COOLER 32 FL.EL. 68'-0"
10" CAP
3" LINES
REF. 3-3408
10" LINE 12D
SW-R-12D-19
SW-H&R-87
14" LINE 406
SW-H-88
SWN-H&R-406-8
14"X 10" RED.
SWN-H-406-9
SWN-44B
SWN-44E
SW-H-90
10" LINE 12D
SW-R-12E-4
3" LINES
PT.B
RECIRCULATION FAN COOLER 35 FL.EL. 68'-0"
PENET. MD EL.64'-0"
PENET. ME EL.64'-0"
SW-H-85A
SW-H&R-12E-5
10" CAP
3" LINE 34" FROM FLOOR
M/S-11E-40-SW-H&R-12E
SW-H-84
10" LINE 12E
PT.A
PT.A
SW-H&R-83
M/S-11E-23-SW-H-12E
SW-R-12E-3A
SW-R-12E-3
10" LINE 12E
FLOOR EL. 66' 0"
SW-H-12E-2
SW-H&R-12E-1
PT.B
SW-H-79
INTEGRALLY WELDED ATTACHMENTS:
SW-H-79
SW-H&R-12E-1
SW-H&R-83
M/S-11E-40-SW-H&R-12E
SW-H-85A
SW-H&R-12E-5
SW-H&R-87
NEW YORK POWER AUTHORITY
INDIAN POINT UNIT NO.3
SERVICE WATER
14" LINE 406,
10" LINE 12D &
10" LINE 12E
INT-3-3409
REV.
1

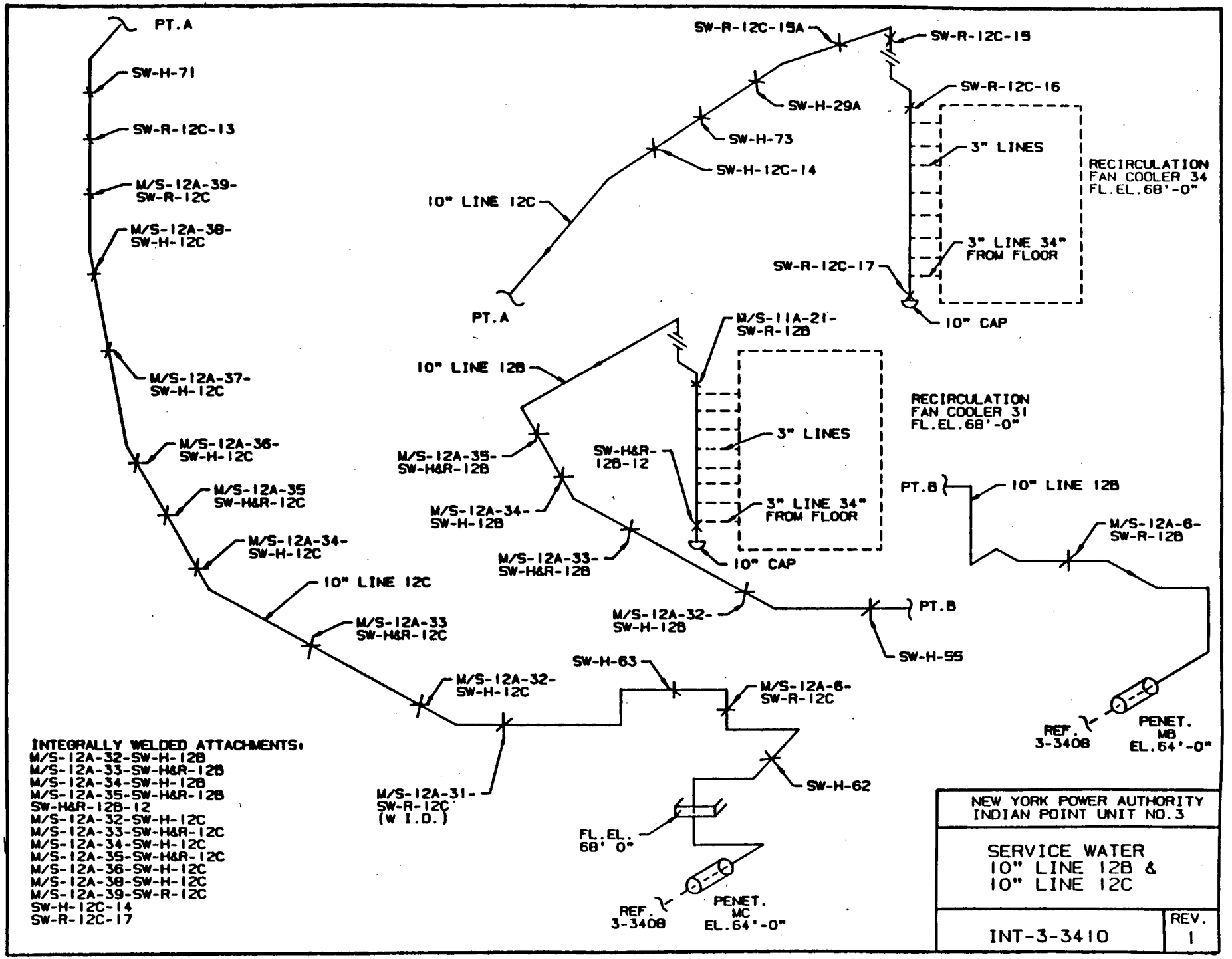
PT.A
SW-H-71
SW-R-12C-13
M/S-12A-39-
SW-R-12C
M/S-12A-38-
SW-H-12C
M/S-12A-37-
SW-H-12C
M/S-12A-36-
SW-H-12C
M/S-12A-35
SW-H&R-12C
M/S-12A-34-
SW-H-12C
10" LINE 12C
M/S-12A-33
SW-H&R-12C
M/S-12A-32-
SW-H-12C
M/S-12A-31-
SW-R-12C
(W I.D.)
SW-R-12C-15A
SW-R-12C-15
SW-R-12C-16
SW-H-29A
SW-H-73
SW-H-12C-14
10" LINE 12C
PT.A
3" LINES
RECIRCULATION
FAN COOLER 34
FL.EL.68'-0"
3" LINE 34"
FROM FLOOR
SW-R-12C-17
10" CAP
M/S-11A-21-
SW-R-12B
10" LINE 12B
RECIRCULATION
FAN COOLER 31
FL.EL.68'-0"
3" LINES
M/S-12A-35-
SW-H&R-12B
SW-H&R-
12B-12
M/S-12A-34-
SW-H-12B
3" LINE 34"
FROM FLOOR
M/S-12A-33-
SW-H&R-12B
10" CAP
M/S-12A-32-
SW-H-12B
PT.B
SW-H-55
PT.B
10" LINE 12B
M/S-12A-6-
SW-R-12B
REF.
3-3408
PENET.
MB
EL.64'-0"
SW-H-63
M/S-12A-6-
SW-R-12C
SW-H-62
FL.EL.
68' 0"
REF.
3-3408
PENET.
MC
EL.64'-0"
INTEGRALLY WELDED ATTACHMENTS:
M/S-12A-32-SW-H-12B
M/S-12A-33-SW-H&R-12B
M/S-12A-34-SW-H-12B
M/S-12A-35-SW-H&R-12B
SW-H&R-12B-12
M/S-12A-32-SW-H-12C
M/S-12A-33-SW-H&R-12C
M/S-12A-34-SW-H-12C
M/S-12A-35-SW-H&R-12C
M/S-12A-36-SW-H-12C
M/S-12A-38-SW-H-12C
M/S-12A-39-SW-R-12C
SW-H-12C-14
SW-R-12C-17
NEW YORK POWER AUTHORITY
INDIAN POINT UNIT NO.3
SERVICE WATER
10" LINE 12B &
10" LINE 12C
INT-3-3410
REV.
1

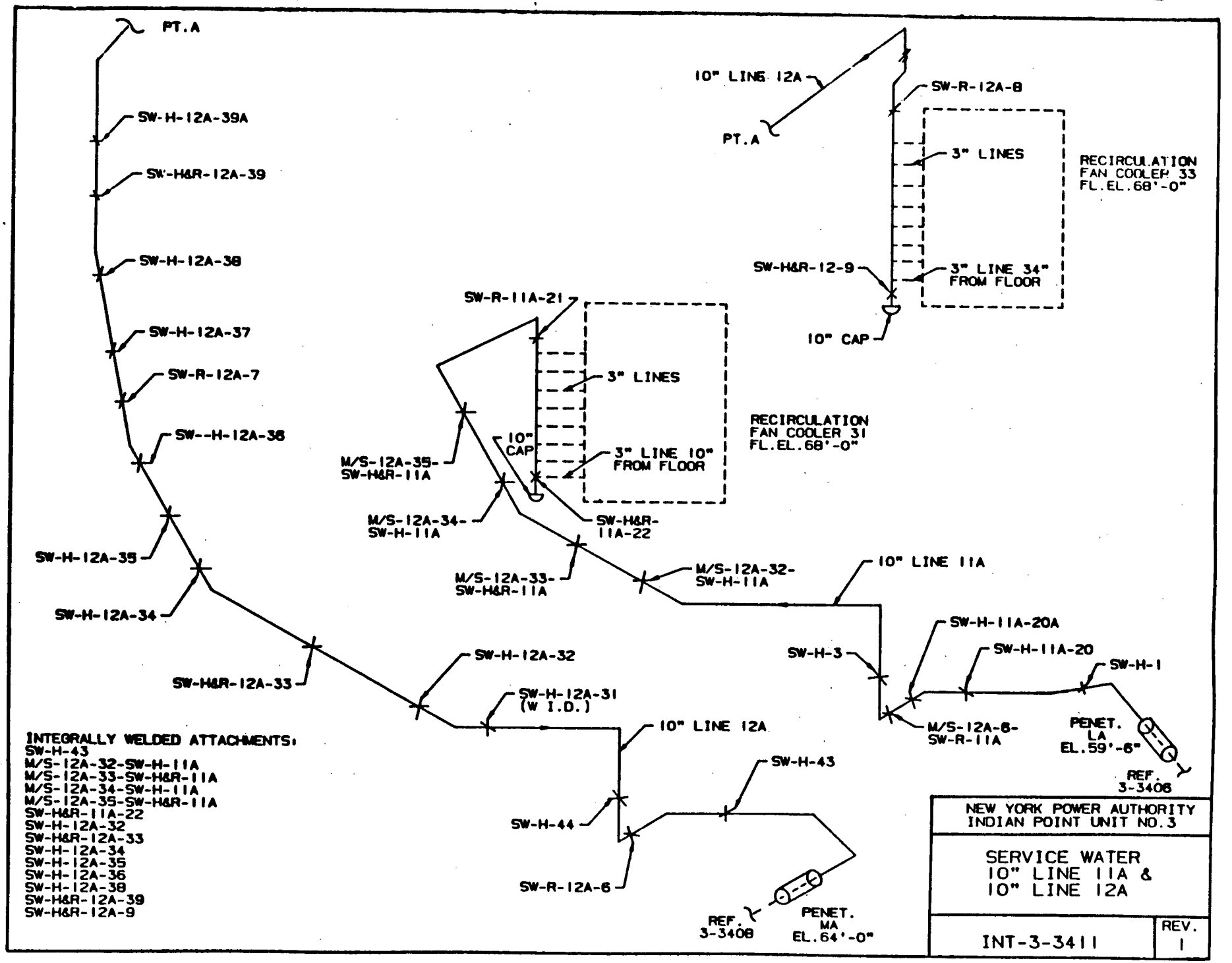
PT.A
SW-H-12A-39A
SW-H&R-12A-39
SW-H-12A-38
SW-H-12A-37
SW-R-12A-7
SW--H-12A-36
SW-H-12A-35
SW-H-12A-34
SW-H&R-12A-33
SW-H-12A-32
SW-H-12A-31
(W I.D.)
10" LINE 12A
SW-H-44
SW-R-12A-6
SW-H-43
REF.
3-3408
PENET.
MA
EL.64'-0"
10" LINE 12A
PT.A
SW-R-12A-8
3" LINES
RECIRCULATION
FAN COOLER 33
FL.EL.68'-0"
SW-H&R-12-9
3" LINE 34"
FROM FLOOR
10" CAP
SW-R-11A-21
3" LINES
RECIRCULATION
FAN COOLER 31
FL.EL.68'-0"
10"
CAP
3" LINE 10"
FROM FLOOR
M/S-12A-35-
SW-H&R-11A
M/S-12A-34-
SW-H-11A
SW-H&R-
11A-22
M/S-12A-33-
SW-H&R-11A
M/S-12A-32-
SW-H-11A
10" LINE 11A
SW-H-11A-20A
SW-H-3
SW-H-11A-20
SW-H-1
M/S-12A-6-
SW-R-11A
PENET.
LA
EL.59'-6"
REF.
3-3406
INTEGRALLY WELDED ATTACHMENTS:
SW-H-43
M/S-12A-32-SW-H-11A
M/S-12A-33-SW-H&R-11A
M/S-12A-34-SW-H-11A
M/S-12A-35-SW-H&R-11A
SW-H&R-11A-22
SW-H-12A-32
SW-H&R-12A-33
SW-H-12A-34
SW-H-12A-35
SW-H-12A-36
SW-H-12A-38
SW-H&R-12A-39
SW-H&R-12A-9
NEW YORK POWER AUTHORITY
INDIAN POINT UNIT NO.3
SERVICE WATER
10" LINE 11A &
10" LINE 12A
INT-3-3411
REV.
1

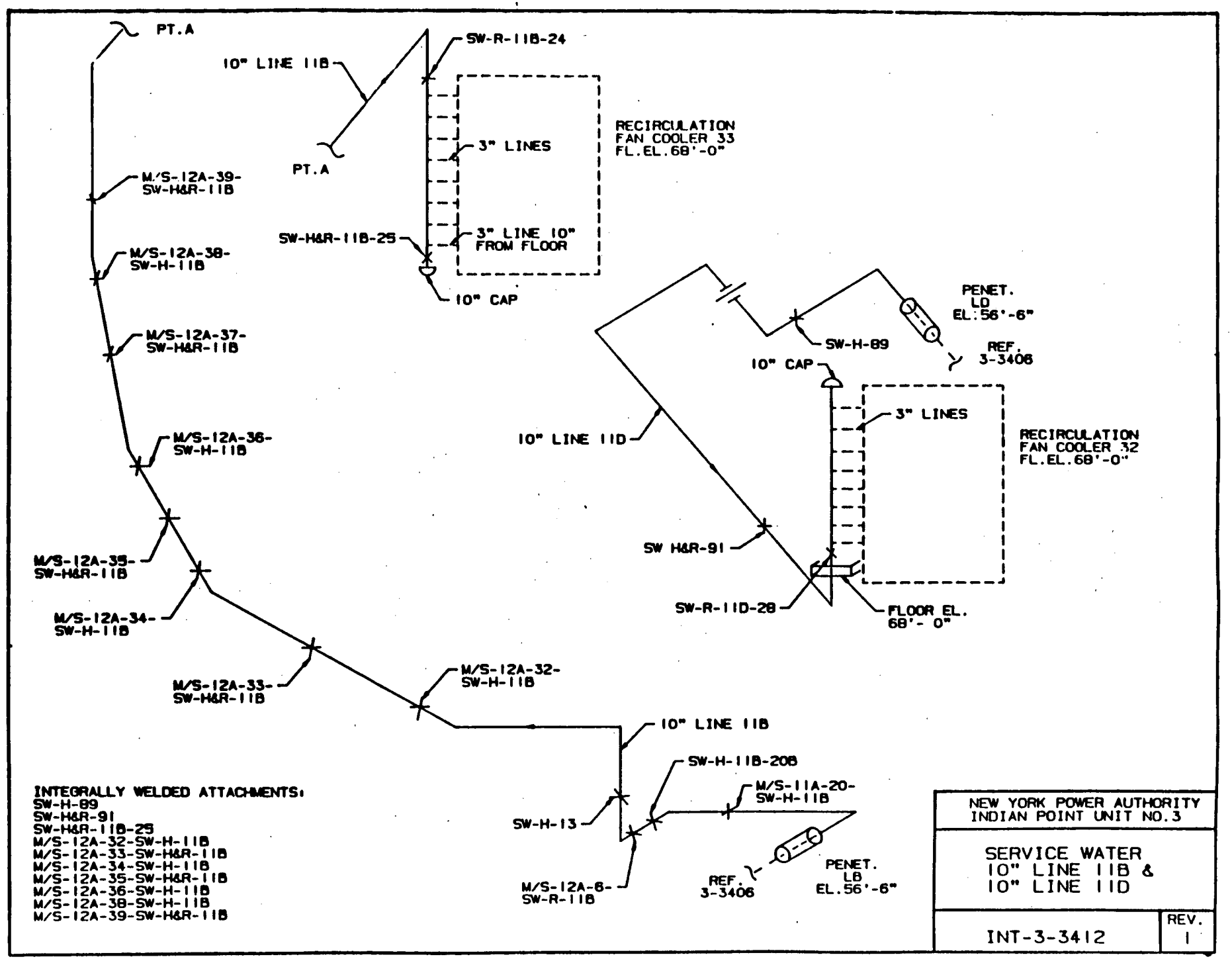
PT.A
10" LINE 11B
SW-R-11B-24
3" LINES
RECIRCULATION
FAN COOLER 33
FL.EL.68'-0"
PT.A
M/S-12A-39-
SW-H&R-11B
SW-H&R-11B-25
3" LINE 10"
FROM FLOOR
M/S-12A-38-
SW-H-11B
10" CAP
M/S-12A-37-
SW-H&R-11B
PENET.
LD
EL.56'-6"
SW-H-89
REF.
3-3406
10" CAP
3" LINES
M/S-12A-36-
SW-H-11B
10" LINE 11D
RECIRCULATION
FAN COOLER 32
FL.EL.68'-0"
SW H&R-91
M/S-12A-35-
SW-H&R-11B
SW-R-11D-28
FLOOR EL.
68'- 0"
M/S-12A-34-
SW-H-11B
M/S-12A-33-
SW-H&R-11B
M/S-12A-32-
SW-H-11B
10" LINE 11B
SW-H-11B-20B
M/S-11A-20-
SW-H-11B
SW-H-13
M/S-12A-6-
SW-R-11B
REF.
3-3406
PENET.
LB
EL.56'-6"
INTEGRALLY WELDED ATTACHMENTS:
SW-H-89
SW-H&R-91
SW-H&R-11B-25
M/S-12A-32-SW-H-11B
M/S-12A-33-SW-H&R-11B
M/S-12A-34-SW-H-11B
M/S-12A-35-SW-H&R-11B
M/S-12A-36-SW-H-11B
M/S-12A-38-SW-H-11B
M/S-12A-39-SW-H&R-11B
NEW YORK POWER AUTHORITY
INDIAN POINT UNIT NO.3
SERVICE WATER
10" LINE 11B &
10" LINE 11D
INT-3-3412
REV.
1

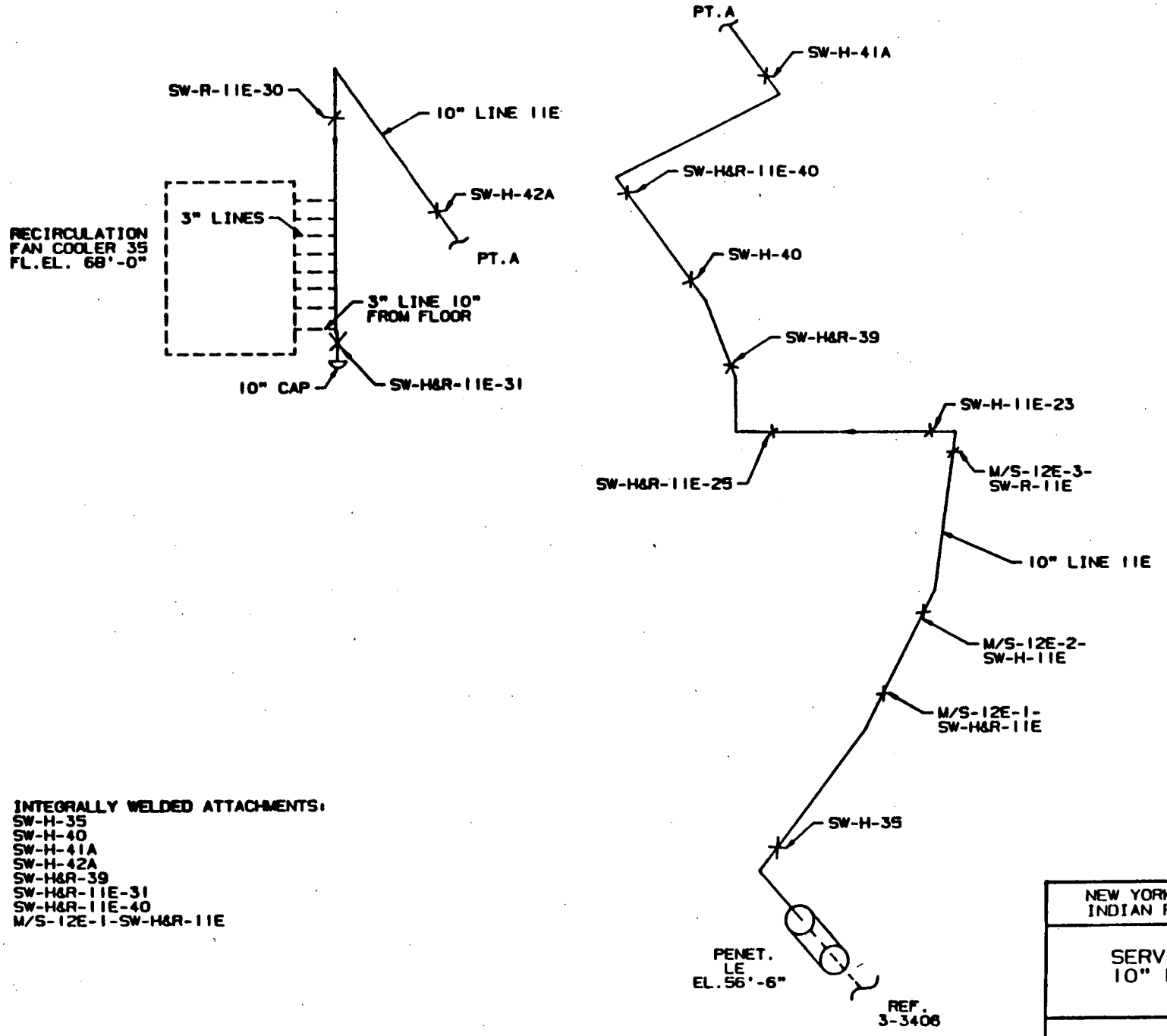

INTEGRALLY WELDED ATTACHMENTS:
SW-H-35
SW-H-40
SW-H-41A
SW-H-42A
SW-H&R-39
SW-H&R-11E-31
SW-H&R-11E-40
M/S-12E-1-SW-H&R-11E

NEW YORK POWER AUTHORITY INDIAN POINT UNIT NO.3	
SERVICE WATER 10" LINE 11E	
INT-3-3413	REV. 1

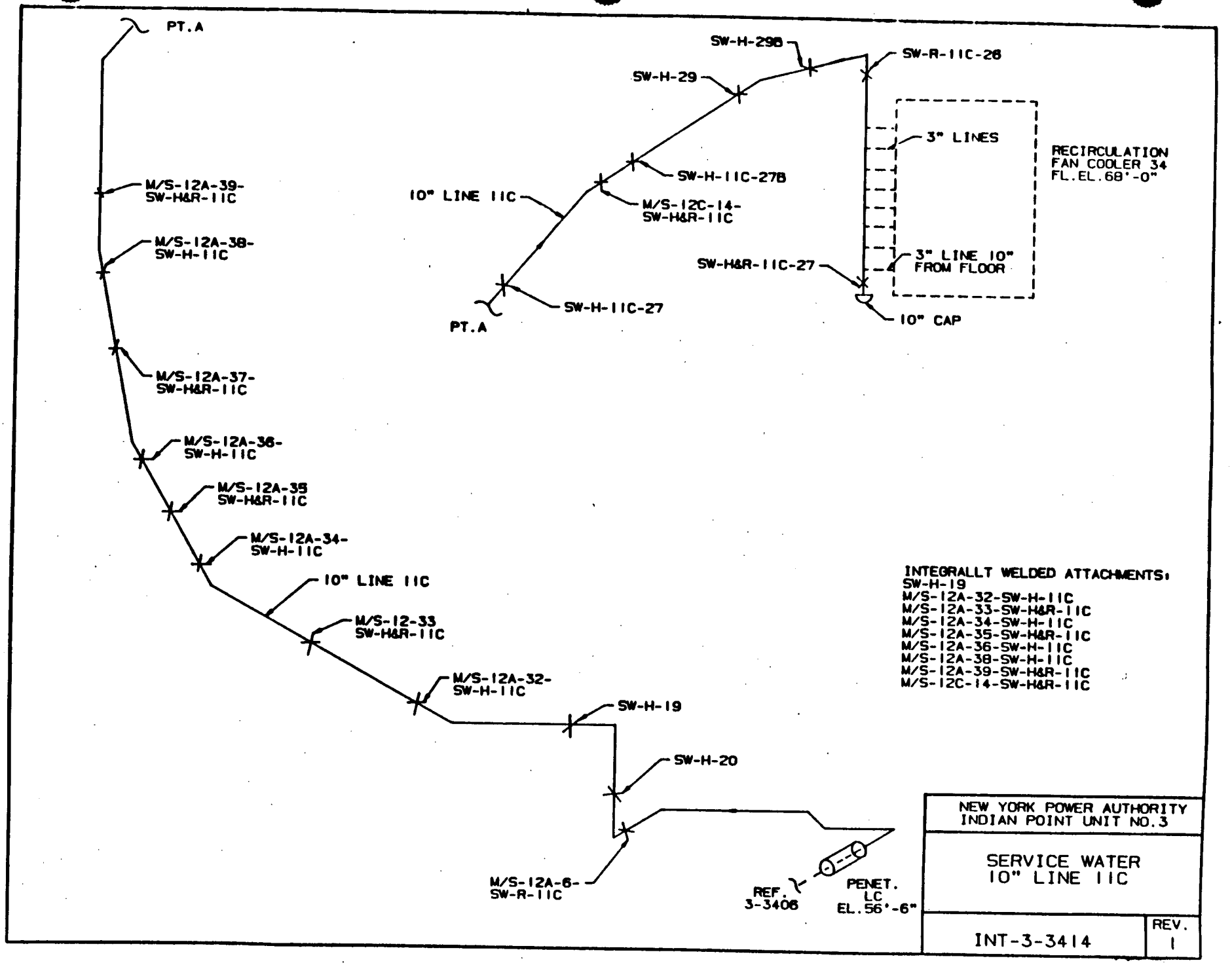
PT.A
M/S-12A-39-
SW-H&R-11C
M/S-12A-38-
SW-H-11C
M/S-12A-37-
SW-H&R-11C
M/S-12A-36-
SW-H-11C
M/S-12A-35
SW-H&R-11C
M/S-12A-34-
SW-H-11C
10" LINE 11C
M/S-12-33
SW-H&R-11C
M/S-12A-32-
SW-H-11C
SW-H-19
SW-H-20
M/S-12A-6-
SW-R-11C
REF.
3-3406
PENET.
LC
EL.56'-6"
10" LINE 11C
PT.A
SW-H-11C-27
M/S-12C-14-
SW-H&R-11C
SW-H-11C-27B
SW-H-29
SW-H-29B
SW-R-11C-26
SW-H&R-11C-27
10" CAP
3" LINES
3" LINE 10"
FROM FLOOR
RECIRCULATION
FAN COOLER 34
FL.EL.68'-0"
INTEGRALLT WELDED ATTACHMENTS:
SW-H-19
M/S-12A-32-SW-H-11C
M/S-12A-33-SW-H&R-11C
M/S-12A-34-SW-H-11C
M/S-12A-35-SW-H&R-11C
M/S-12A-36-SW-H-11C
M/S-12A-38-SW-H-11C
M/S-12A-39-SW-H&R-11C
M/S-12C-14-SW-H&R-11C
NEW YORK POWER AUTHORITY
INDIAN POINT UNIT NO.3
SERVICE WATER
10" LINE 11C
INT-3-3414
REV.
1

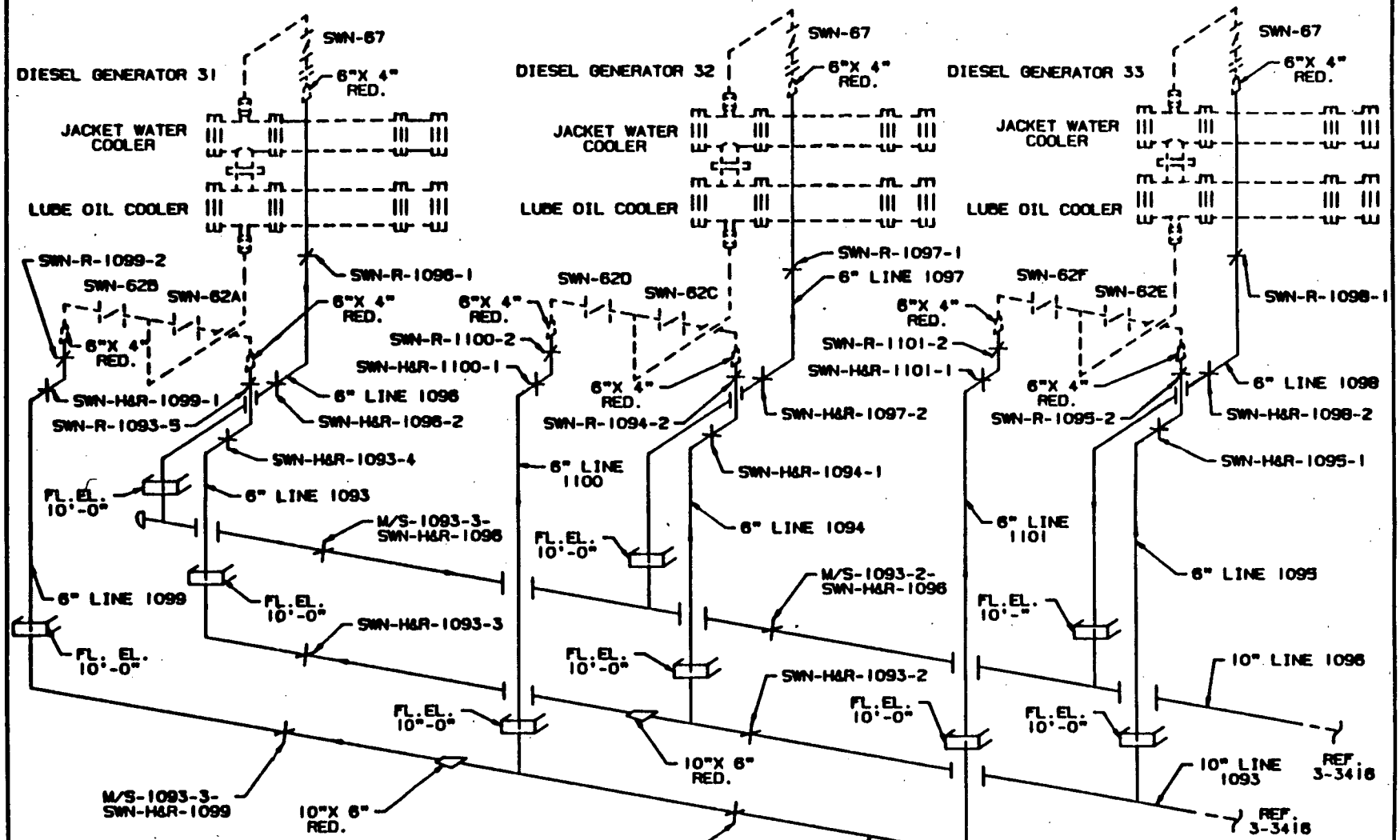

NEW YORK POWER AUTHORITY
INDIAN POINT UNIT NO.3

SERVICE WATER
10"&6" LINE 1093, 10"&6" LINE 1098,
10"&6" LINE 1099, 6" LINE 1094,
6" LINE 1095, 6" LINE 1097,
6" LINE 1098, 6" LINE 1100
& 6" LINE 1101

INT-3-3415

REV. 0

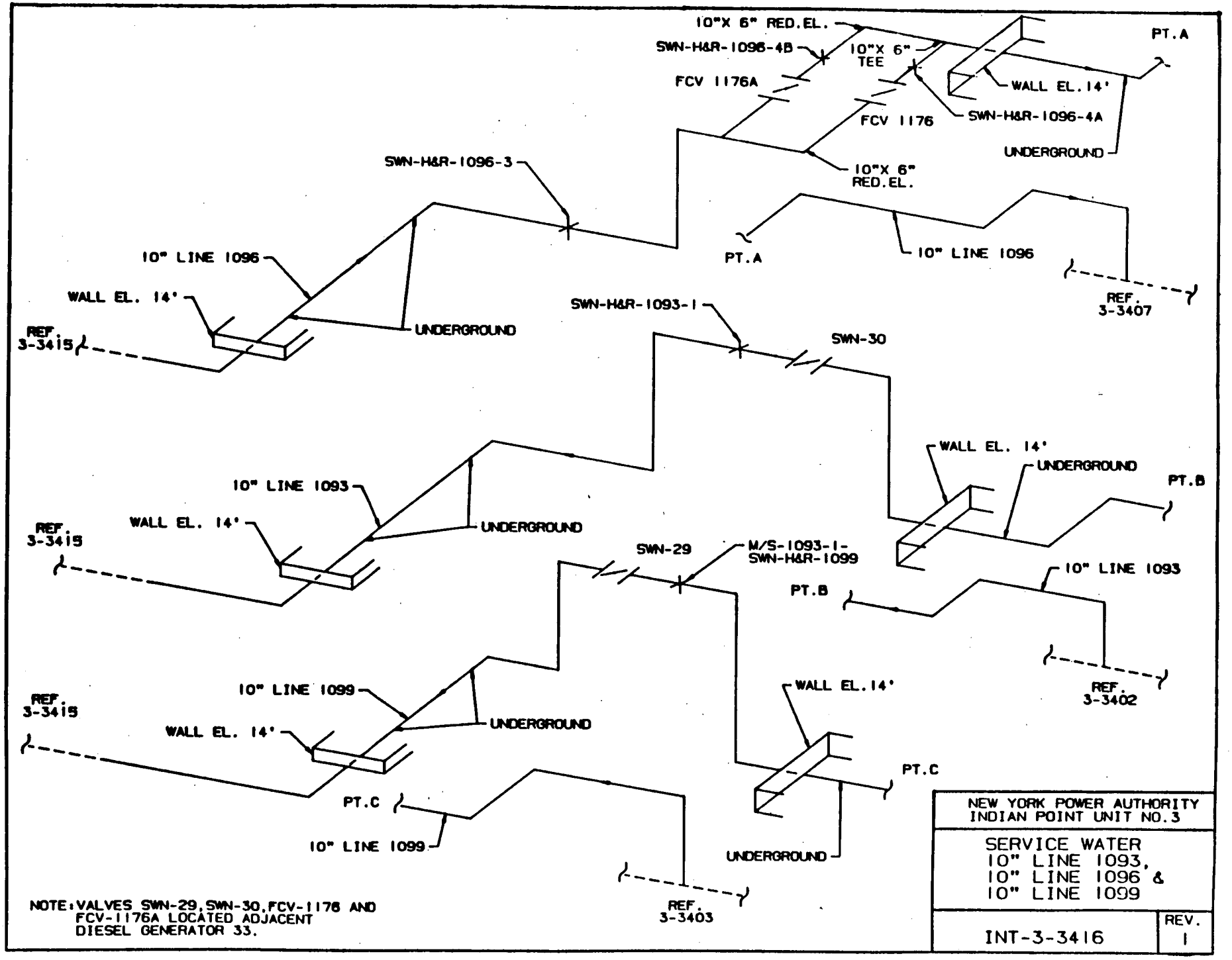
10"X 6" RED.EL.
SWN-H&R-1096-4B
10"X 6" TEE
PT.A
FCV 1176A
WALL EL.14'
FCV 1176
SWN-H&R-1096-4A
UNDERGROUND
SWN-H&R-1096-3
10"X 6" RED.EL.
PT.A
10" LINE 1096
10" LINE 1096
REF. 3-3407
WALL EL. 14'
UNDERGROUND
REF 3-3415
SWN-H&R-1093-1
SWN-30
WALL EL. 14'
UNDERGROUND
PT.B
10" LINE 1093
WALL EL. 14'
UNDERGROUND
REF 3-3415
SWN-29
M/S-1093-1-SWN-H&R-1099
10" LINE 1093
PT.B
REF. 3-3402
10" LINE 1099
WALL EL.14'
REF 3-3415
WALL EL. 14'
UNDERGROUND
PT.C
PT.C
10" LINE 1099
UNDERGROUND
REF. 3-3403
NOTE: VALVES SWN-29, SWN-30, FCV-1176 AND FCV-1176A LOCATED ADJACENT DIESEL GENERATOR 33.
NEW YORK POWER AUTHORITY
INDIAN POINT UNIT NO.3
SERVICE WATER
10" LINE 1093,
10" LINE 1096 &
10" LINE 1099
INT-3-3416
REV. 1

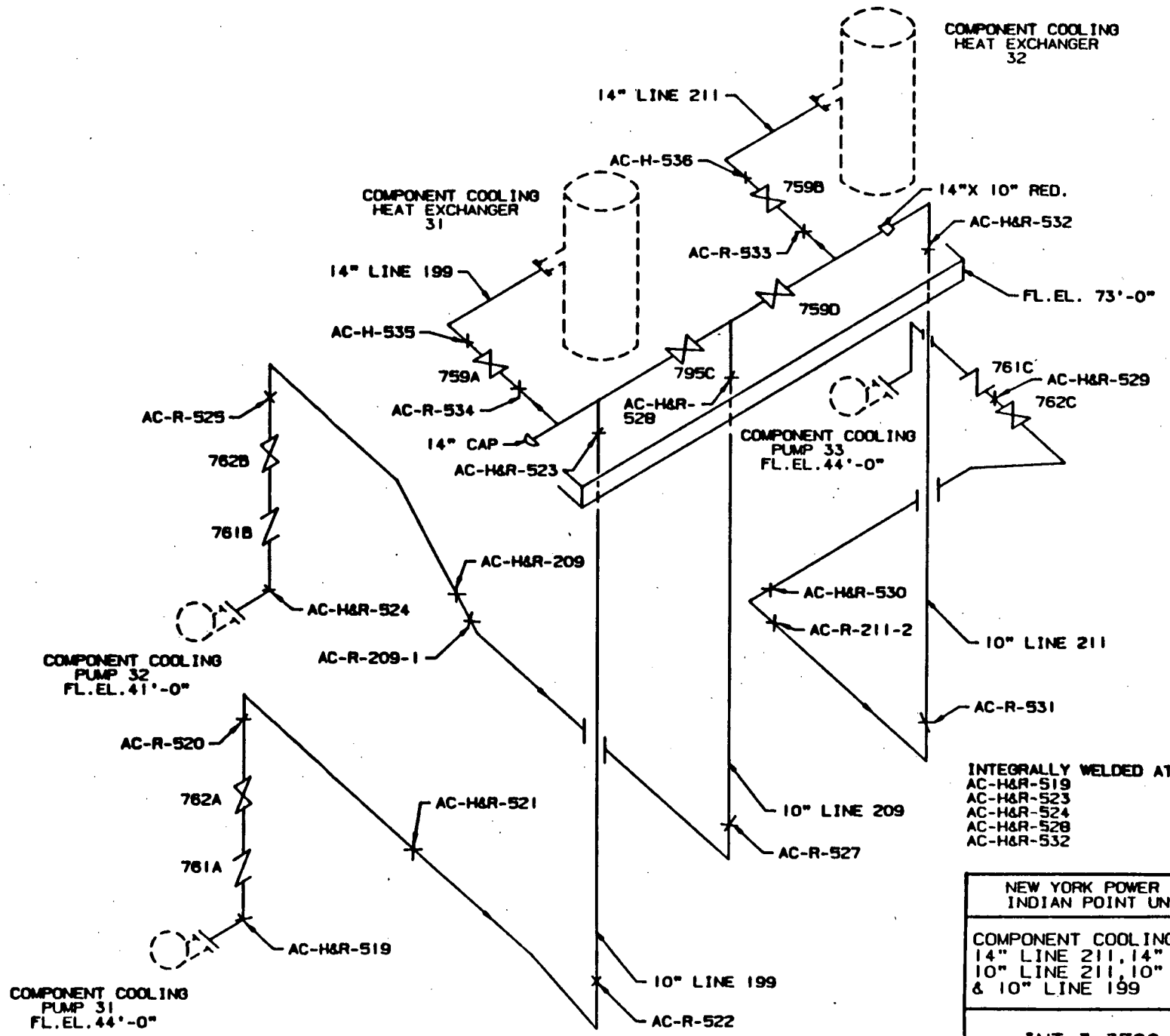

INTEGRALLY WELDED ATTACHMENTS:
AC-H&R-519
AC-H&R-523
AC-H&R-524
AC-H&R-528
AC-H&R-532

NEW YORK POWER AUTHORITY
INDIAN POINT UNIT NO.3

COMPONENT COOLING WATER
14" LINE 211, 14" LINE 199,
10" LINE 211, 10" LINE 209
& 10" LINE 199

INT-3-3500

REV. 1

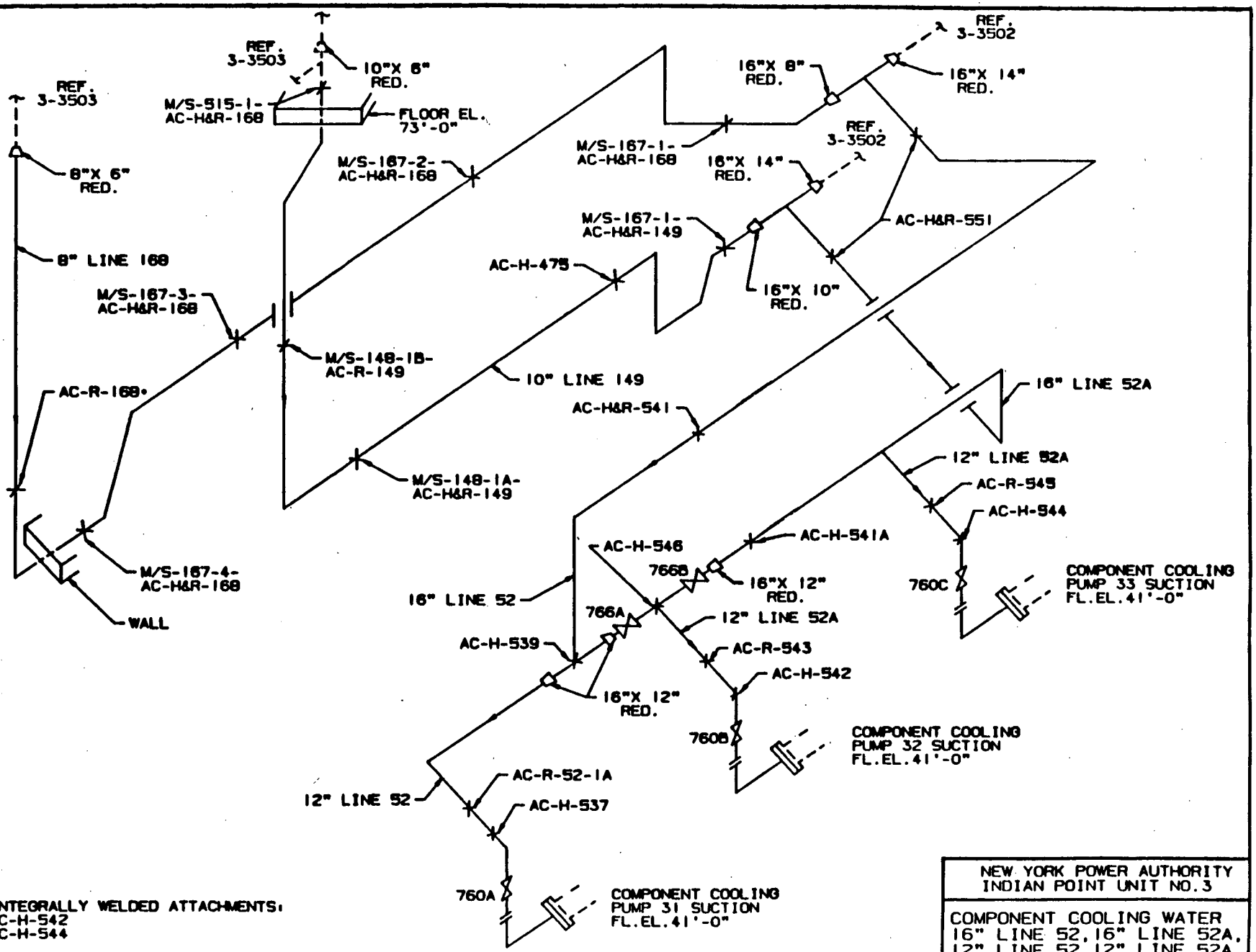

INTEGRALLY WELDED ATTACHMENTS:
AC-H-542
AC-H-544

•INACCESSIBLE CONCRETE SHIELD

NEW YORK POWER AUTHORITY INDIAN POINT UNIT NO.3	
COMPONENT COOLING WATER 16" LINE 52, 16" LINE 52A, 12" LINE 52, 12" LINE 52A, 10" LINE 149 & 8"LINE 168	
INT-3-3501	REV. 1

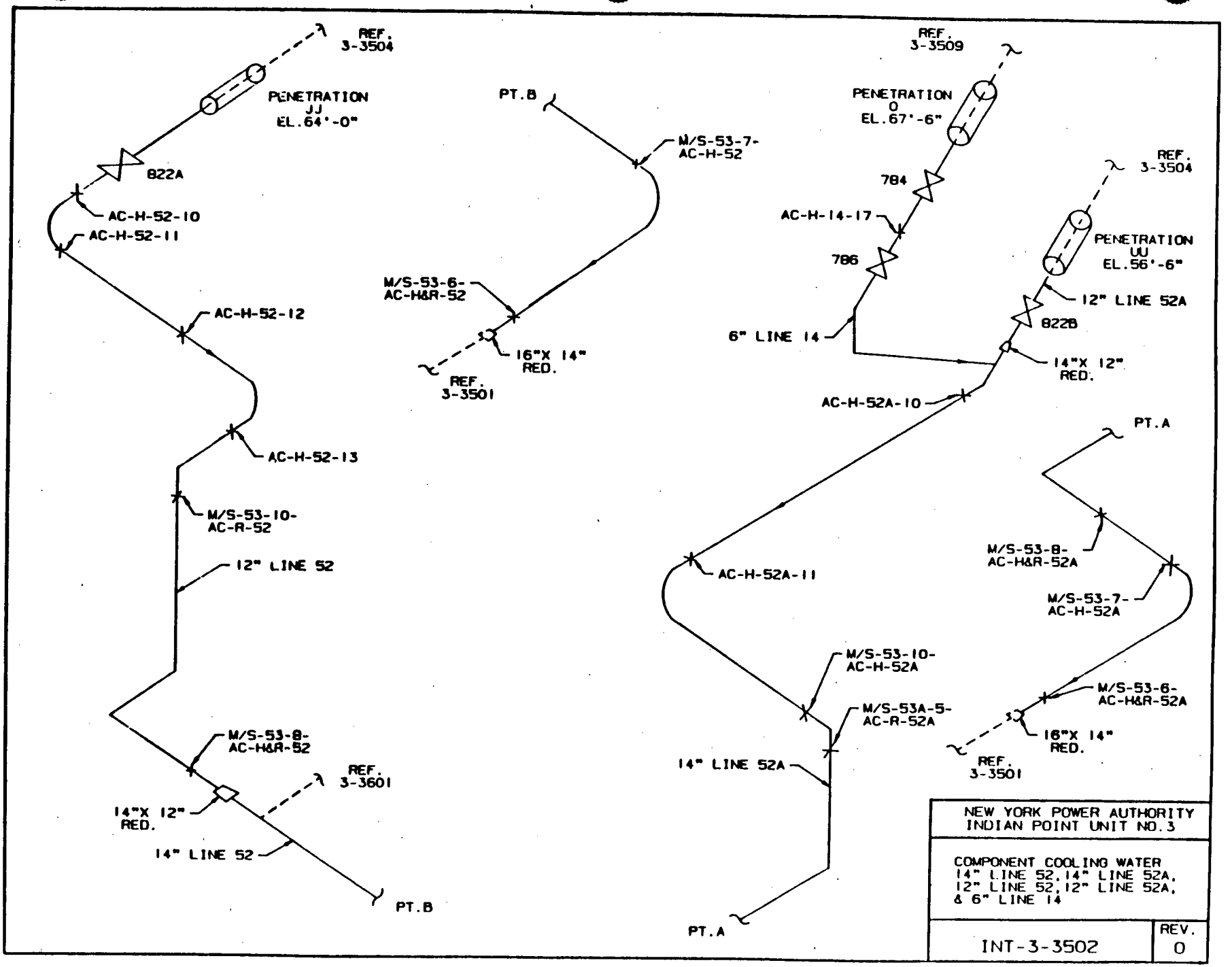
REF. 3-3504
PENETRATION JJ EL.64'-0"
822A
AC-H-52-10
AC-H-52-11
AC-H-52-12
AC-H-52-13
M/S-53-10-AC-R-52
12" LINE 52
M/S-53-8-AC-H&R-52
REF. 3-3601
14"X 12" RED.
14" LINE 52
PT.B
PT.B
M/S-53-7-AC-H-52
M/S-53-6-AC-H&R-52
16"X 14" RED.
REF. 3-3501
REF. 3-3509
PENETRATION O EL.67'-6"
784
AC-H-14-17
786
6" LINE 14
REF. 3-3504
PENETRATION UU EL.56'-6"
12" LINE 52A
822B
14"X 12" RED.
AC-H-52A-10
AC-H-52A-11
M/S-53-10-AC-H-52A
M/S-53A-5-AC-R-52A
14" LINE 52A
PT.A
PT.A
M/S-53-8-AC-H&R-52A
M/S-53-7-AC-H-52A
M/S-53-6-AC-H&R-52A
16"X 14" RED.
REF. 3-3501
NEW YORK POWER AUTHORITY
INDIAN POINT UNIT NO.3
COMPONENT COOLING WATER
14" LINE 52, 14" LINE 52A,
12" LINE 52, 12" LINE 52A,
& 6" LINE 14
INT-3-3502
REV.
0

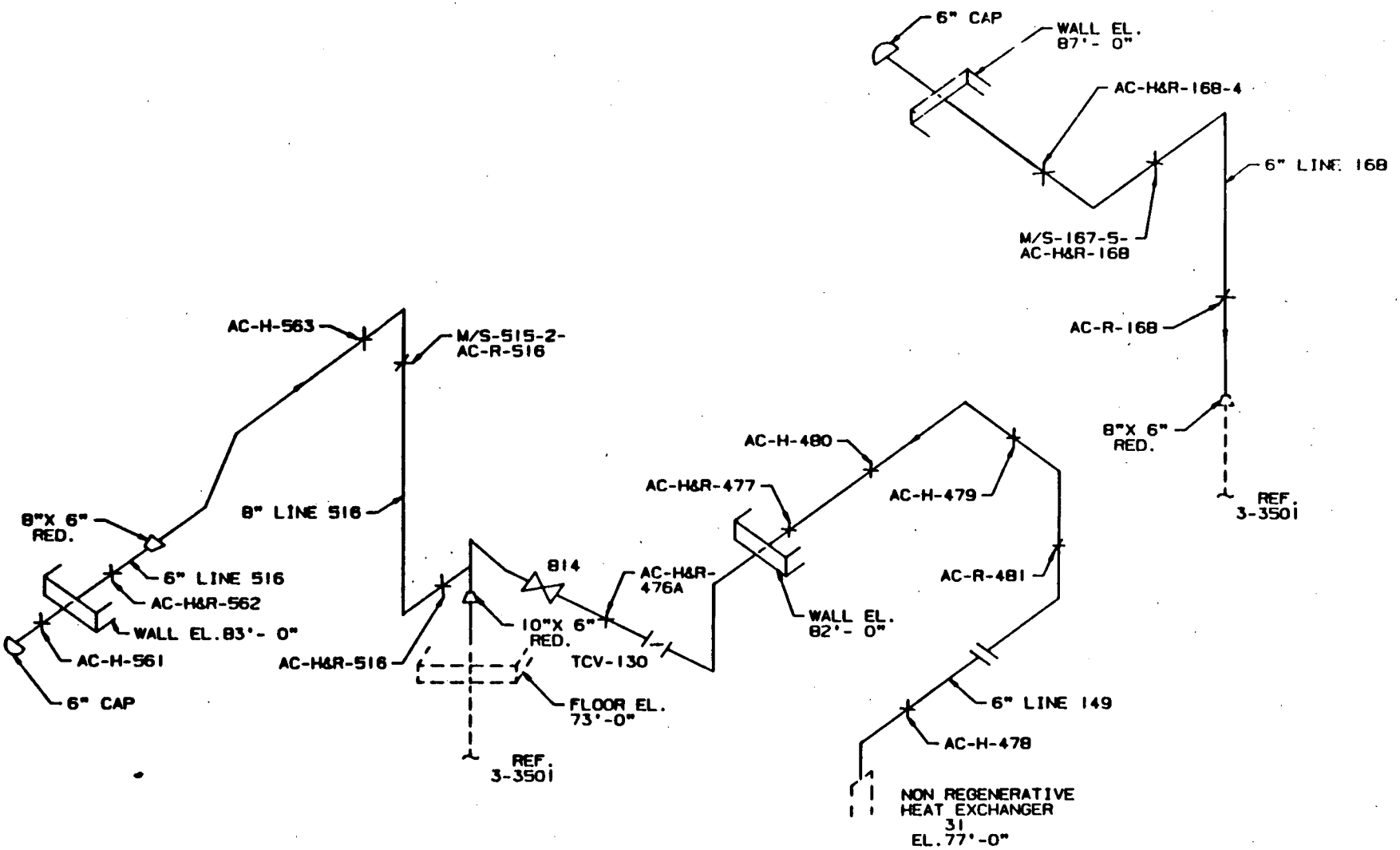

NEW YORK POWER AUTHORITY INDIAN POINT UNIT NO.3	
COMPONENT COOLING WATER 8" LINE 516,6" LINE 149, 6" LINE 168 & 6" LINE 516	
INT-3-3503	REV. 1

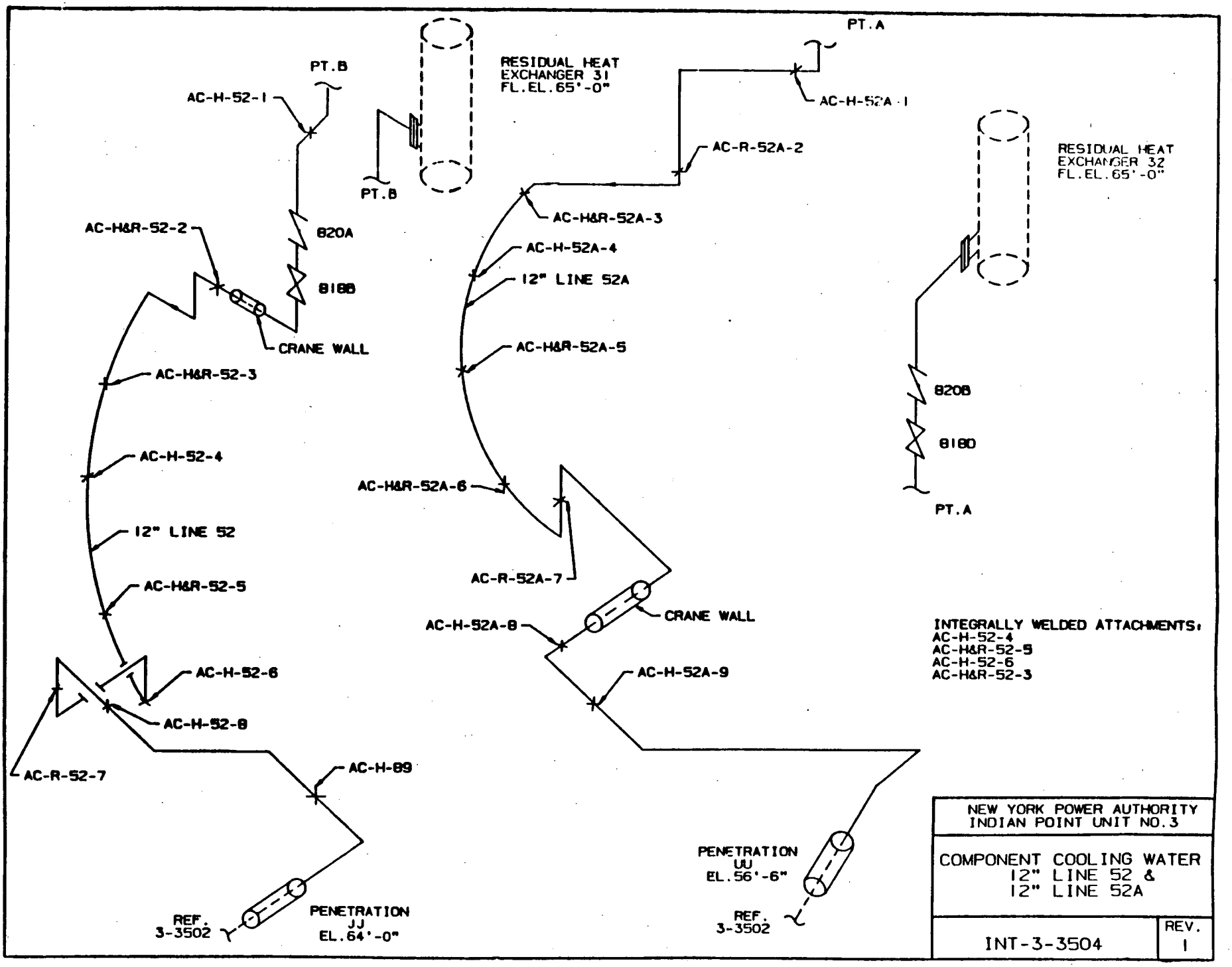
PT.B
AC-H-52-1
RESIDUAL HEAT
EXCHANGER 31
FL.EL.65'-0"
PT.B
PT.A
AC-H-52A-1
AC-R-52A-2
RESIDUAL HEAT
EXCHANGER 32
FL.EL.65'-0"
AC-H&R-52-2
820A
818B
CRANE WALL
AC-H&R-52-3
AC-H-52-4
12" LINE 52
AC-H&R-52-5
AC-H-52-6
AC-H-52-8
AC-R-52-7
AC-H-89
REF.
3-3502
PENETRATION
JJ
EL.64'-0"
AC-H&R-52A-3
AC-H-52A-4
12" LINE 52A
AC-H&R-52A-5
AC-H&R-52A-6
AC-R-52A-7
CRANE WALL
AC-H-52A-8
AC-H-52A-9
820B
818D
PT.A
PENETRATION
UU
EL.56'-6"
REF.
3-3502
INTEGRALLY WELDED ATTACHMENTS:
AC-H-52-4
AC-H&R-52-5
AC-H-52-6
AC-H&R-52-3
NEW YORK POWER AUTHORITY
INDIAN POINT UNIT NO.3
COMPONENT COOLING WATER
12" LINE 52 &
12" LINE 52A
INT-3-3504
REV.
1

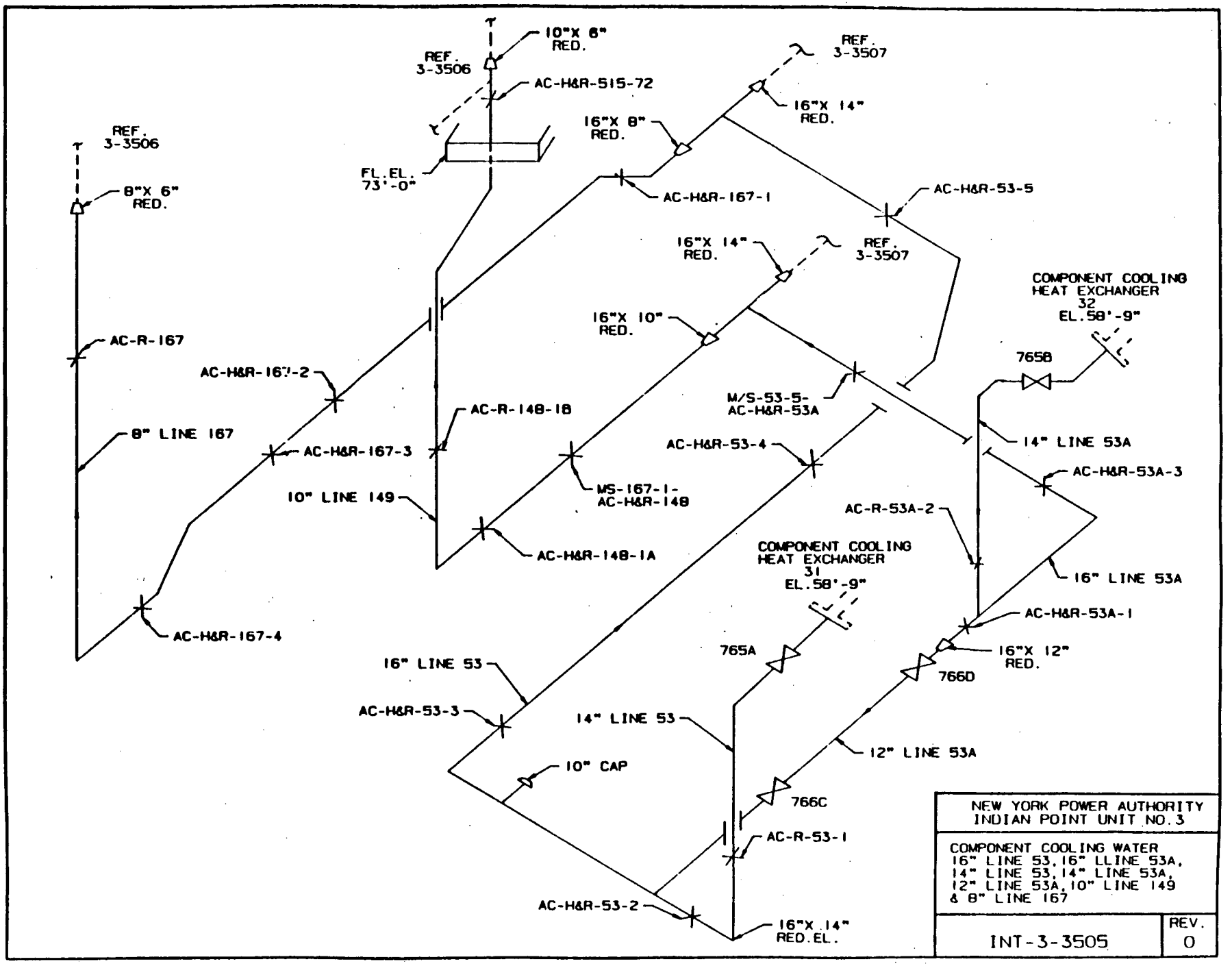

NEW YORK POWER AUTHORITY
INDIAN POINT UNIT NO.3

COMPONENT COOLING WATER
16" LINE 53,16" LLINE 53A,
14" LINE 53,14" LINE 53A,
12" LINE 53A,10" LINE 149
& 8" LINE 167

INT-3-3505

REV. 0

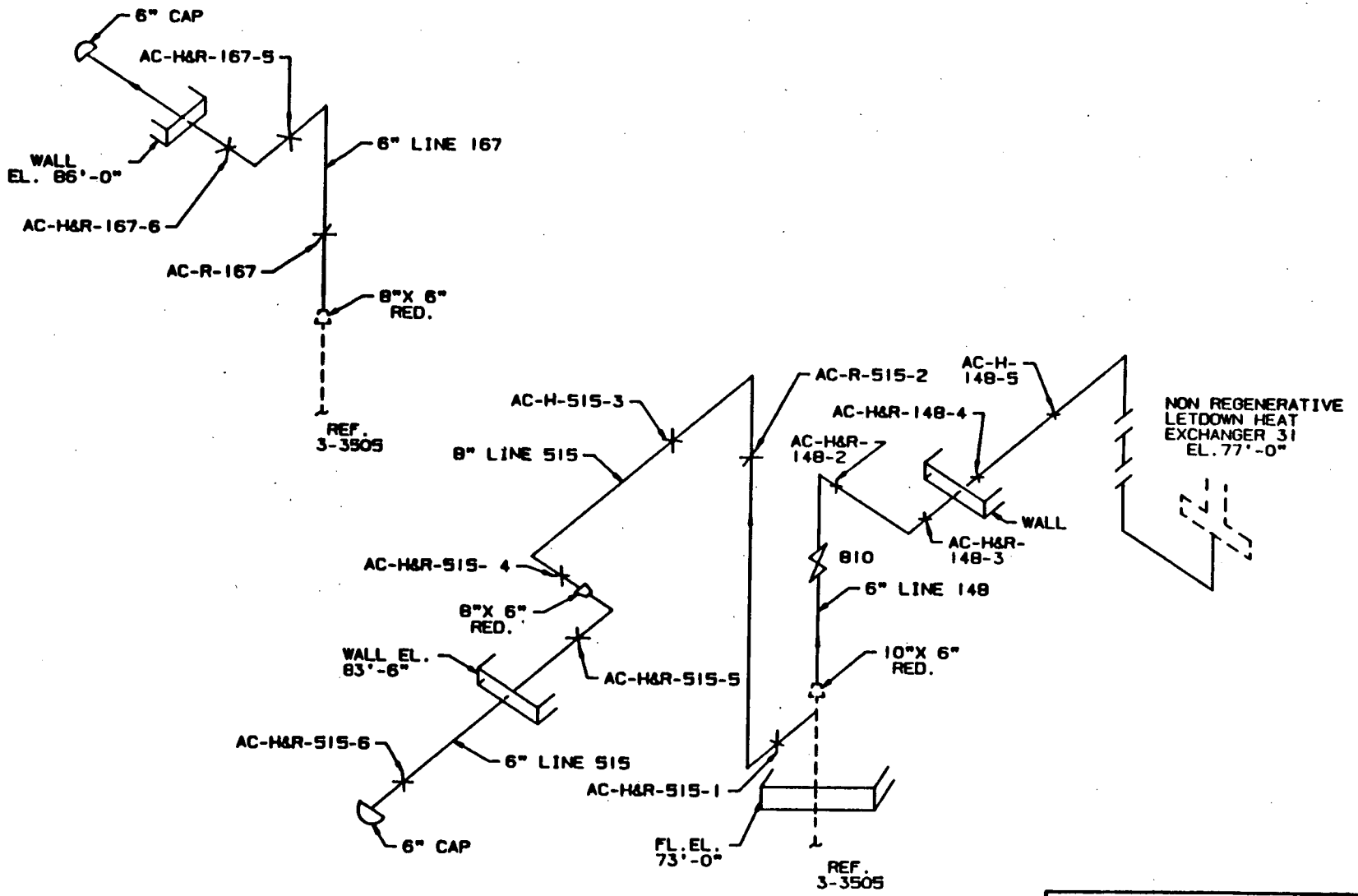

NEW YORK POWER AUTHORITY
INDIAN POINT UNIT NO.3

COMPONENT COOLING WATER
6" LINE 148,6" LINE 167
& 6" LINE 515

INT-3-3506

REV.
1

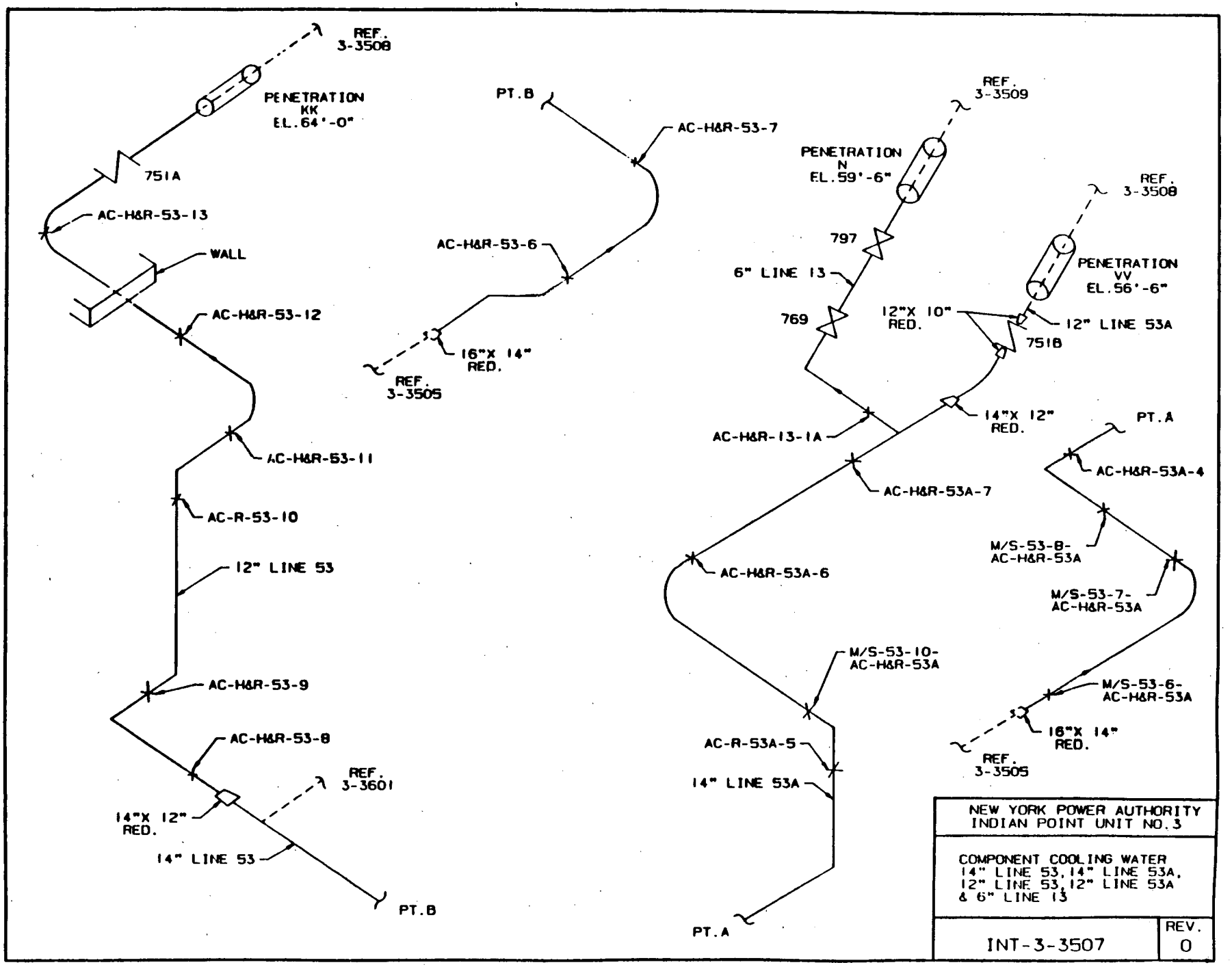
REF. 3-3508
PENETRATION KK EL.64'-0"
751A
AC-H&R-53-13
WALL
AC-H&R-53-12
AC-H&R-53-11
AC-R-53-10
12" LINE 53
AC-H&R-53-9
AC-H&R-53-8
REF. 3-3601
14"X 12" RED.
14" LINE 53
PT.B
PT.B
AC-H&R-53-7
AC-H&R-53-6
16"X 14" RED.
REF. 3-3505
REF. 3-3509
PENETRATION N EL.59'-6"
797
6" LINE 13
769
AC-H&R-13-1A
AC-H&R-53A-7
AC-H&R-53A-6
M/S-53-10-AC-H&R-53A
AC-R-53A-5
14" LINE 53A
PT.A
REF. 3-3508
PENETRATION VV EL.56'-6"
12"X 10" RED.
12" LINE 53A
751B
14"X 12" RED.
PT.A
AC-H&R-53A-4
M/S-53-8-AC-H&R-53A
M/S-53-7-AC-H&R-53A
M/S-53-6-AC-H&R-53A
16"X 14" RED.
REF. 3-3505
NEW YORK POWER AUTHORITY
INDIAN POINT UNIT NO.3
COMPONENT COOLING WATER
14" LINE 53, 14" LINE 53A,
12" LINE 53, 12" LINE 53A
& 6" LINE 13
INT-3-3507
REV.
0

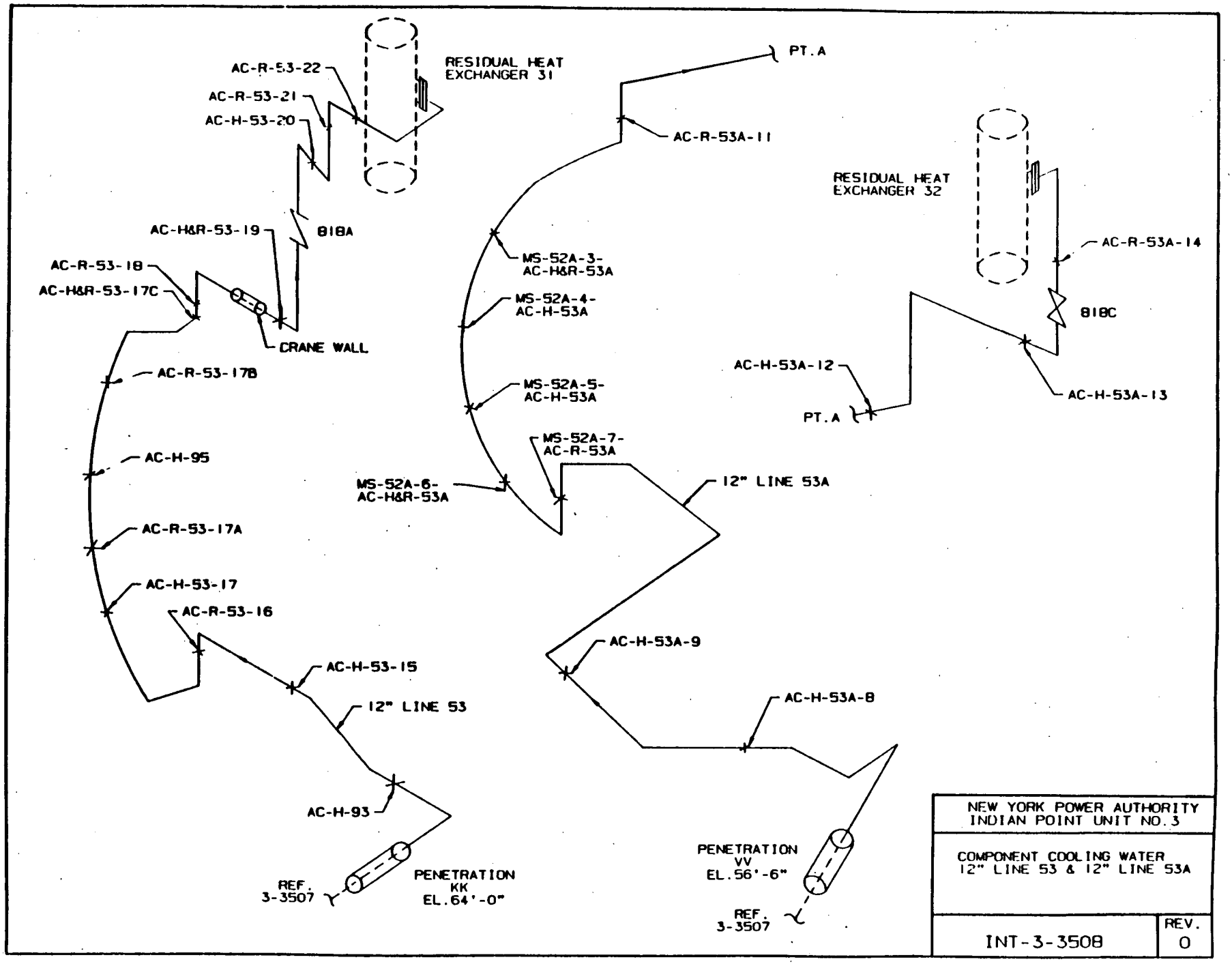
RESIDUAL HEAT EXCHANGER 31
AC-R-53-22
AC-R-53-21
AC-H-53-20
818A
AC-H&R-53-19
AC-R-53-18
AC-H&R-53-17C
CRANE WALL
AC-R-53-17B
AC-H-95
AC-R-53-17A
AC-H-53-17
AC-R-53-16
AC-H-53-15
12" LINE 53
AC-H-93
PENETRATION KK EL.64'-0"
REF. 3-3507
PT.A
AC-R-53A-11
MS-52A-3- AC-H&R-53A
MS-52A-4- AC-H-53A
MS-52A-5- AC-H-53A
MS-52A-7- AC-R-53A
MS-52A-6- AC-H&R-53A
12" LINE 53A
AC-H-53A-9
AC-H-53A-8
PENETRATION VV EL.56'-6"
REF. 3-3507
RESIDUAL HEAT EXCHANGER 32
AC-R-53A-14
818C
AC-H-53A-12
AC-H-53A-13
PT.A
NEW YORK POWER AUTHORITY
INDIAN POINT UNIT NO.3
COMPONENT COOLING WATER
12" LINE 53 & 12" LINE 53A
INT-3-3508
REV.
0

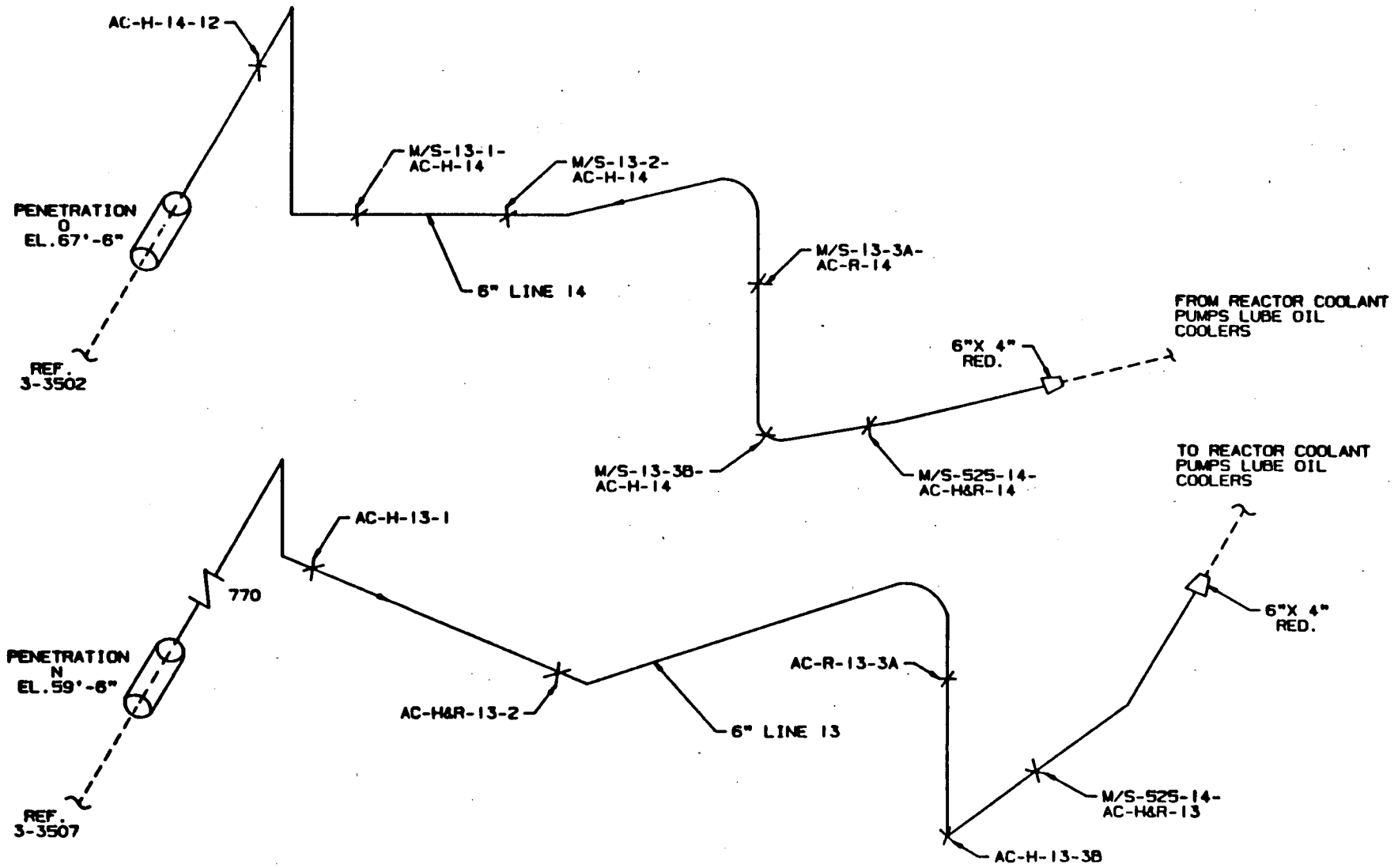

INTEGRALLY WELDED ATTACHMENTS:
M/S-13-3B-AC-H-14
AC-H-13-3B

NEW YORK POWER AUTHORITY INDIAN POINT UNIT NO.3	
COMPONENT COOLING WATER 6" LINE 13 & 6" LINE 14	
INT-3-3509	REV. 1

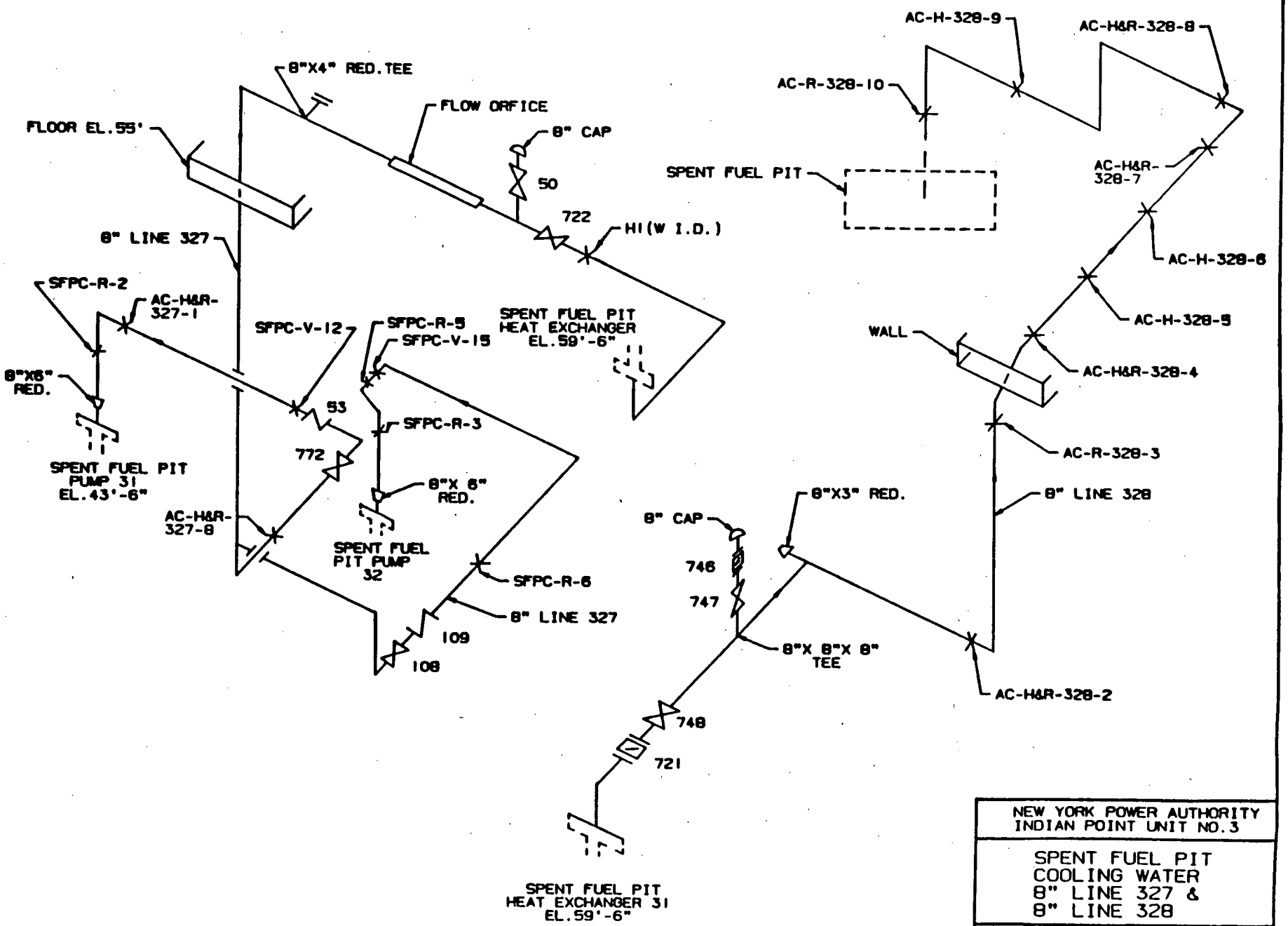

NEW YORK POWER AUTHORITY
INDIAN POINT UNIT NO.3

SPENT FUEL PIT
COOLING WATER
8" LINE 327 &
8" LINE 328

INT-3-3600

REV. 1

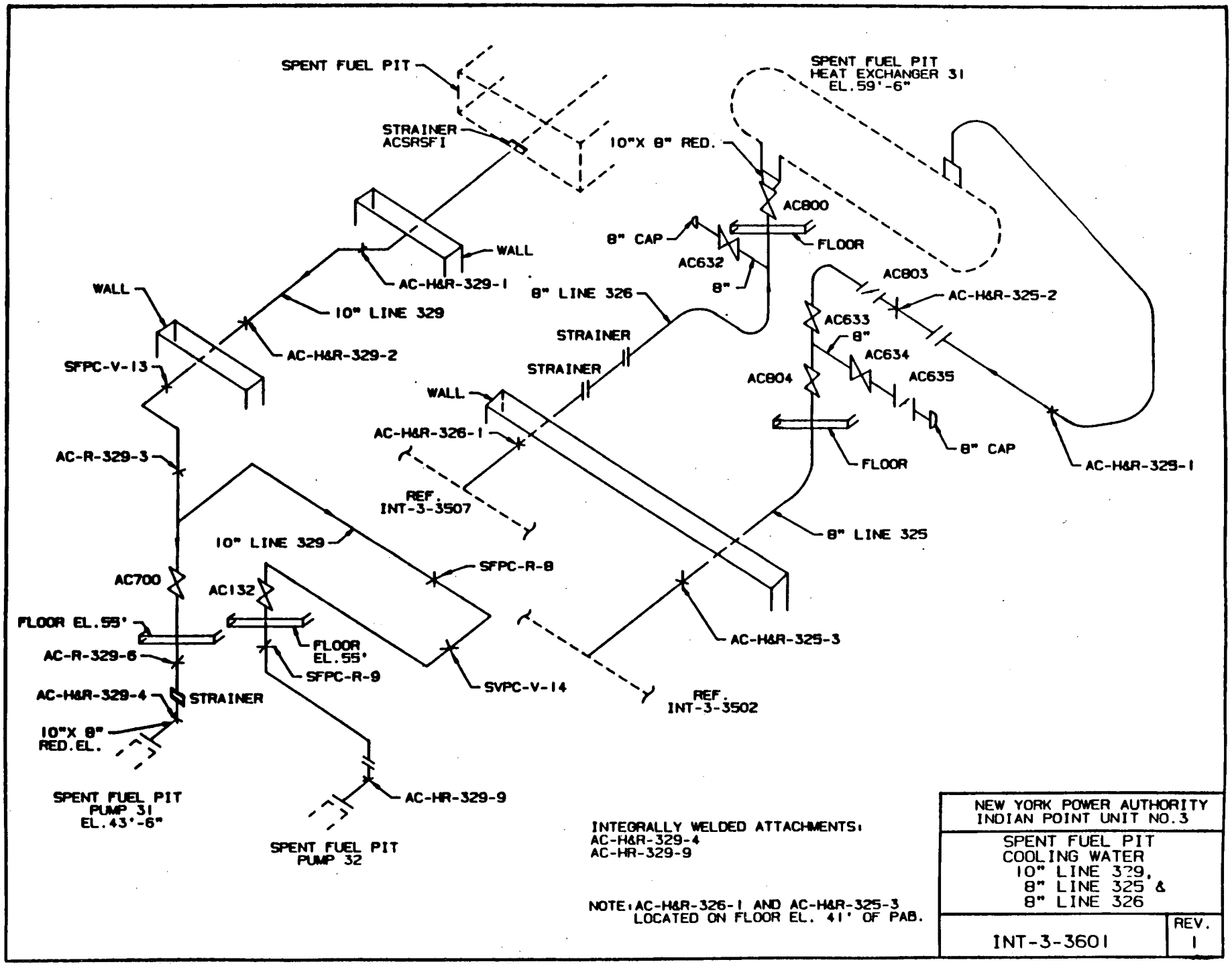

INTEGRALLY WELDED ATTACHMENTS:
AC-H&R-329-4
AC-HR-329-9

NOTE: AC-H&R-326-1 AND AC-H&R-325-3 LOCATED ON FLOOR EL. 41' OF PAB.

NEW YORK POWER AUTHORITY INDIAN POINT UNIT NO.3	
SPENT FUEL PIT COOLING WATER 10" LINE 329, 8" LINE 325 & 8" LINE 326	
INT-3-3601	REV. 1

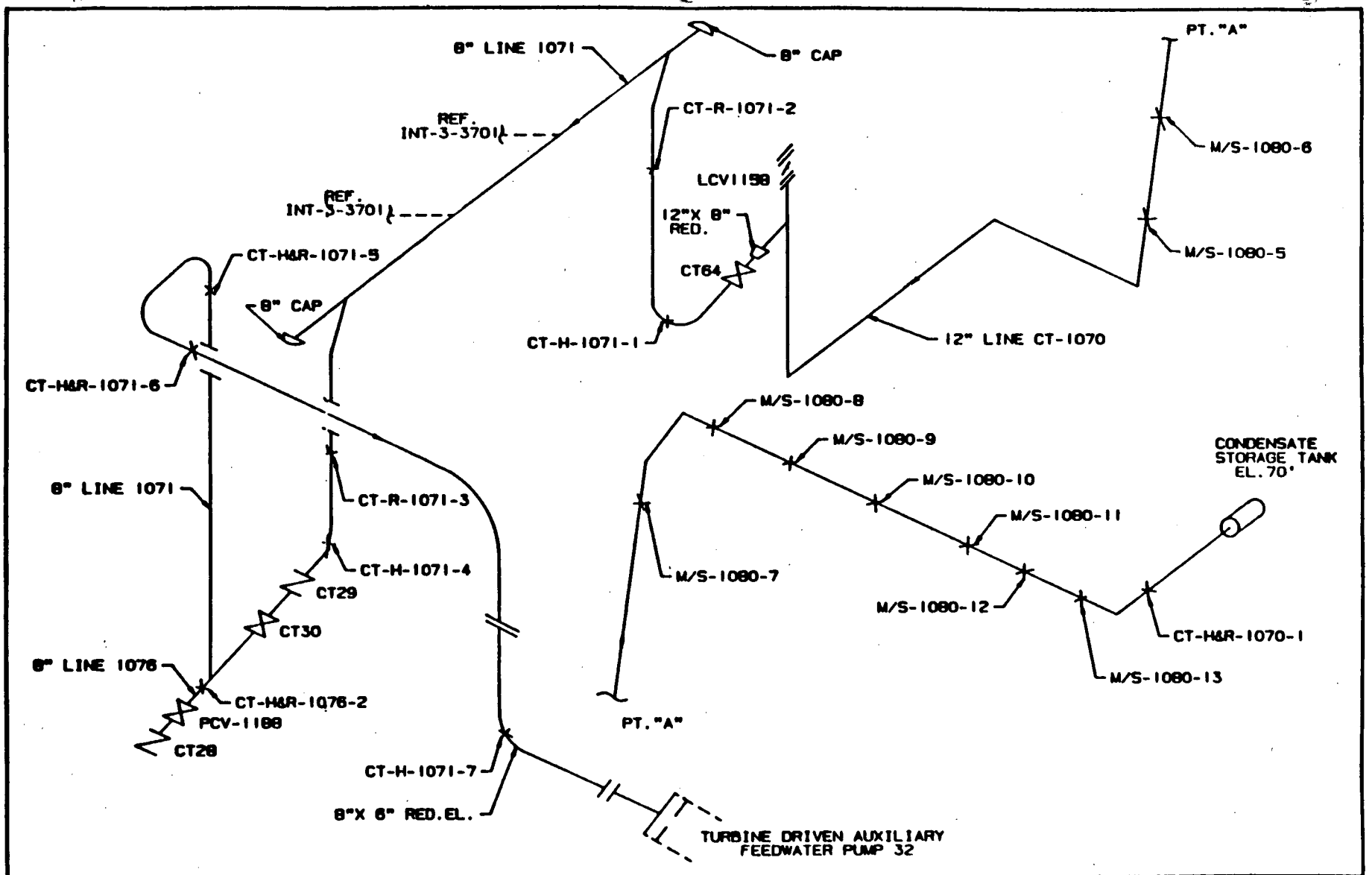

NEW YORK POWER AUTHORITY INDIAN POINT UNIT NO.3	
AUXILIARY FEEDPUMP 12" LINE CT-1070,8" LINE 1076 & 8" LINE 1071	
INT-3-3700	REV. 0

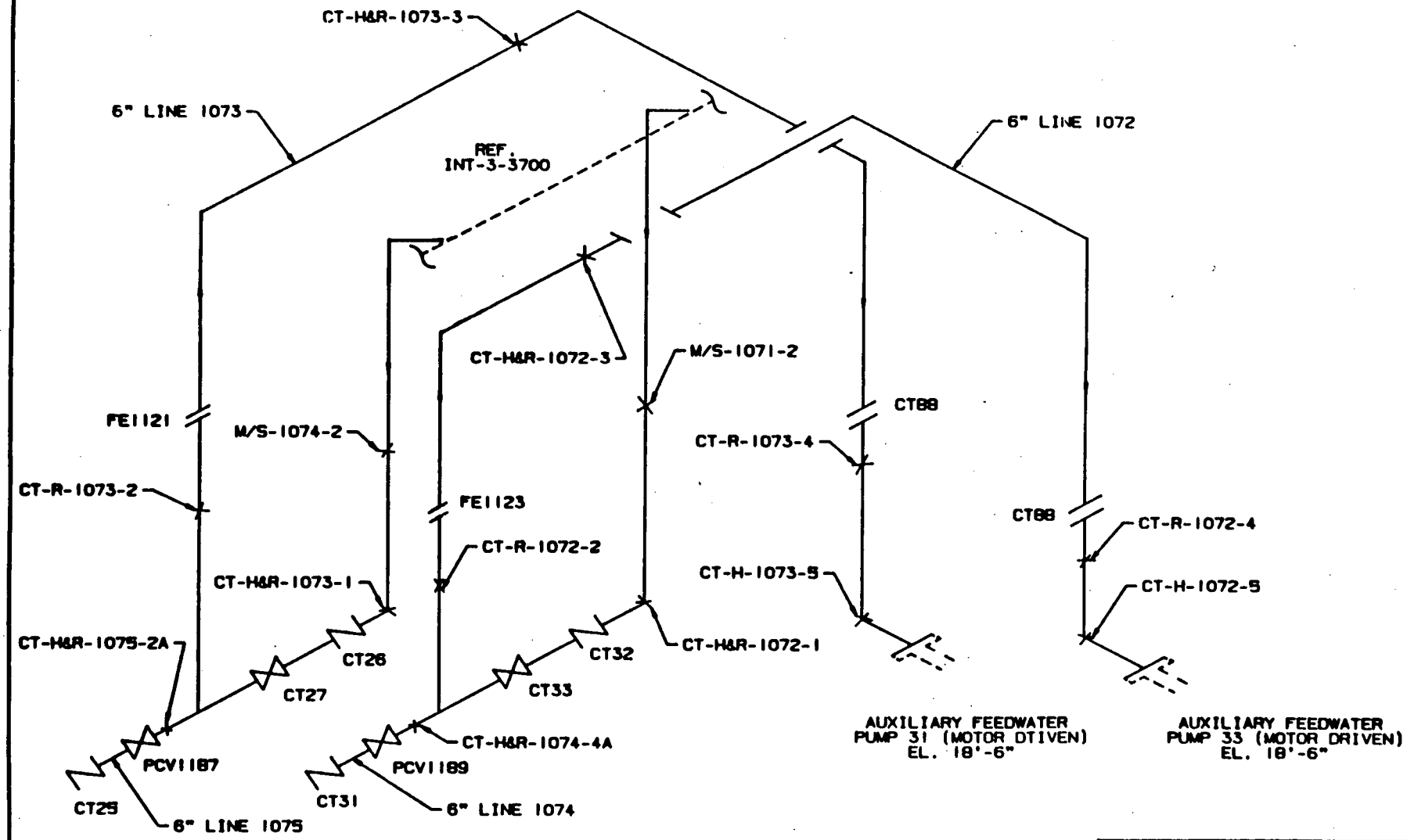

INTEGRALLY WELDED ATTACHMENTS:
CT-H&R-1072-1
CT-H-1072-5
CT-H&R-1073-1
CT-H-1073-5

NEW YORK POWER AUTHORITY INDIAN POINT UNIT NO.3	
AUXILIARY FEEDPUMP 6" LINE 1072, 6" LINE 1073, 6" LINE 1074 & 6" LINE 1075	
INT-3-3701	REV. 1

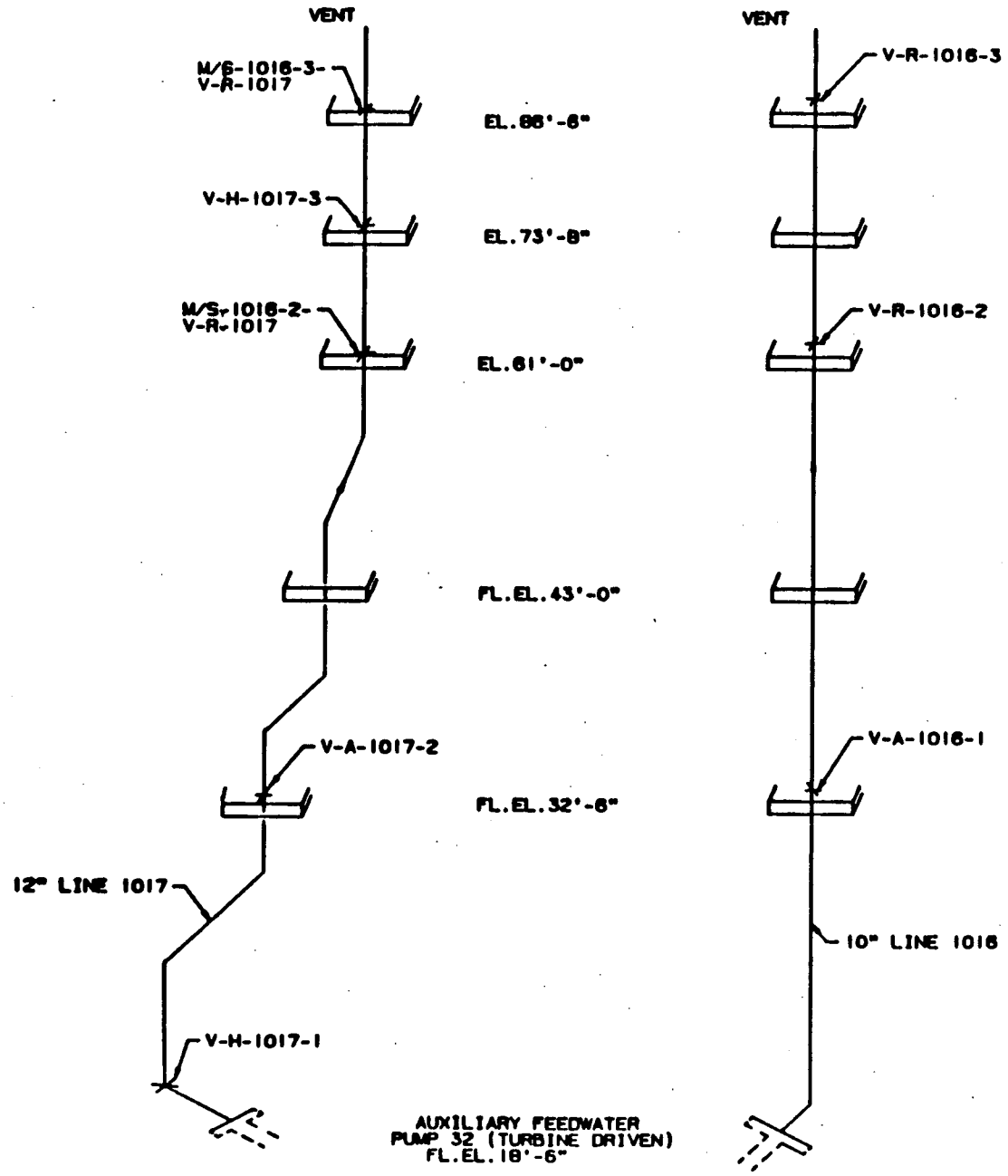

NEW YORK POWER AUTHORITY INDIAN POINT UNIT NO.3	
AUXILIARY FEEDPUMP 12" LINE 1017 & 10" LINE 1016	
INT-3-3702	REV. 0

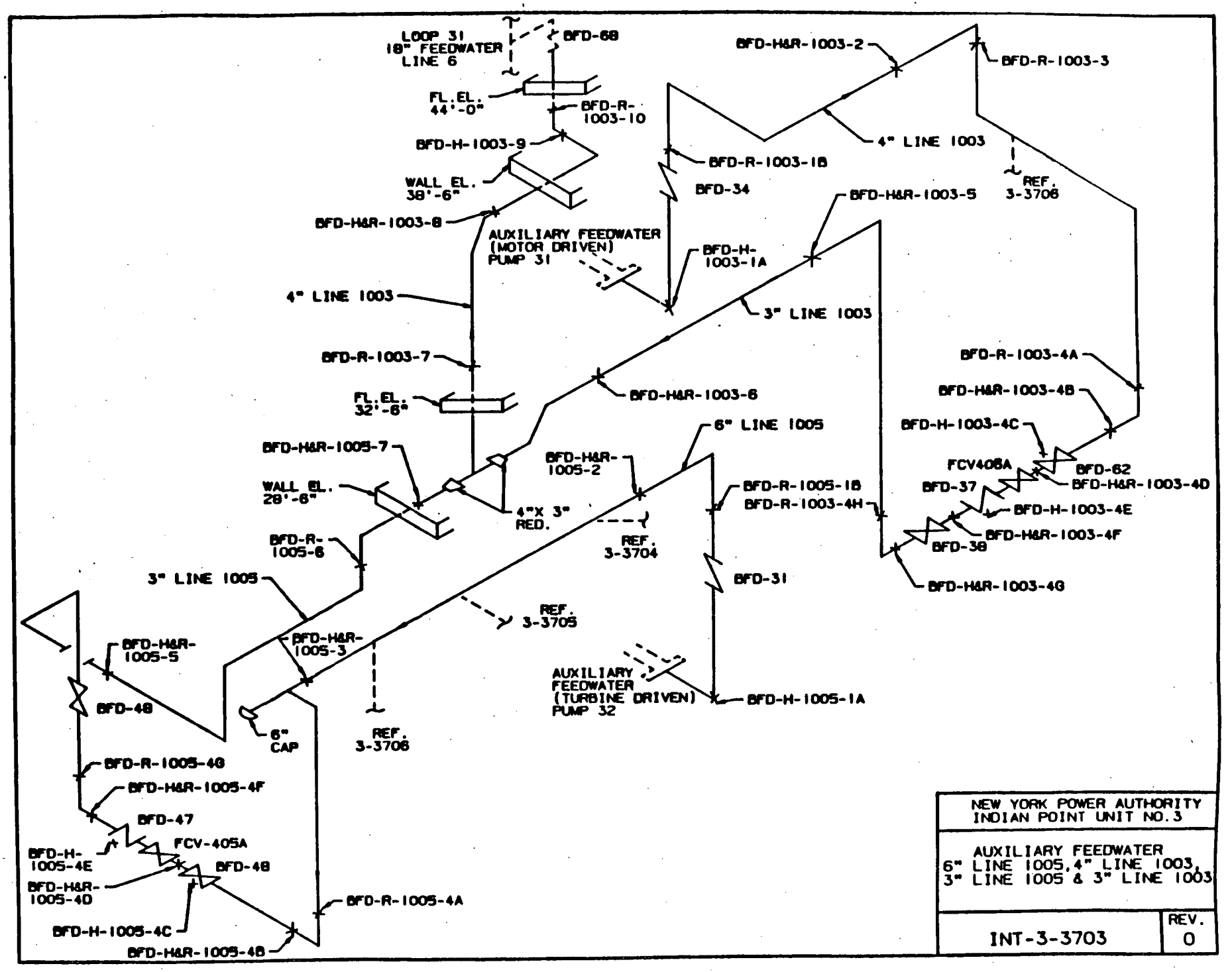

NEW YORK POWER AUTHORITY
INDIAN POINT UNIT NO.3

AUXILIARY FEEDWATER
6" LINE 1005, 4" LINE 1003,
3" LINE 1005 & 3" LINE 1003

INT-3-3703

REV. 0

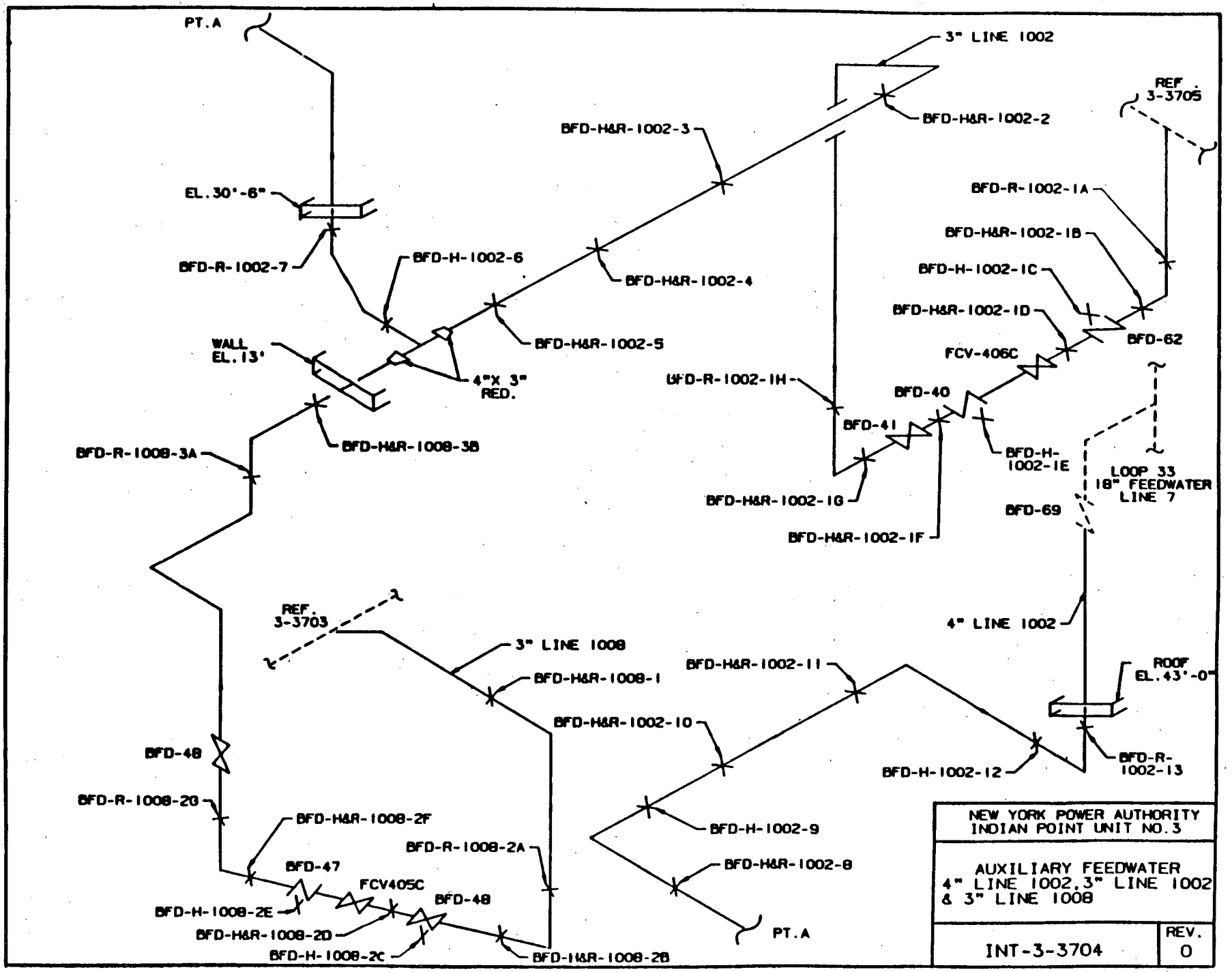
PT.A
3" LINE 1002
REF 3-3705
BFD-H&R-1002-2
BFD-H&R-1002-3
EL.30'-6"
BFD-R-1002-1A
BFD-H&R-1002-1B
BFD-R-1002-7
BFD-H-1002-6
BFD-H-1002-1C
BFD-H&R-1002-4
BFD-H&R-1002-1D
BFD-62
WALL EL.13'
BFD-H&R-1002-5
FCV-406C
4"X 3" RED.
BFD-R-1002-1H
BFD-40
BFD-41
BFD-H-1002-1E
BFD-R-1008-3A
BFD-H&R-1008-3B
LOOP 33 18" FEEDWATER LINE 7
BFD-H&R-1002-1G
BFD-69
BFD-H&R-1002-1F
REF 3-3703
4" LINE 1002
3" LINE 1008
BFD-H&R-1002-11
ROOF EL.43'-0"
BFD-H&R-1008-1
BFD-H&R-1002-10
BFD-48
BFD-R-1002-13
BFD-H-1002-12
BFD-R-1008-2G
BFD-H&R-1008-2F
BFD-H-1002-9
BFD-R-1008-2A
BFD-47
BFD-H&R-1002-8
FCV405C
BFD-48
BFD-H-1008-2E
PT.A
BFD-H&R-1008-2D
BFD-H-1008-2C
BFD-H&R-1008-2B
NEW YORK POWER AUTHORITY
INDIAN POINT UNIT NO.3
AUXILIARY FEEDWATER
4" LINE 1002, 3" LINE 1002
& 3" LINE 1008
INT-3-3704
REV.
0

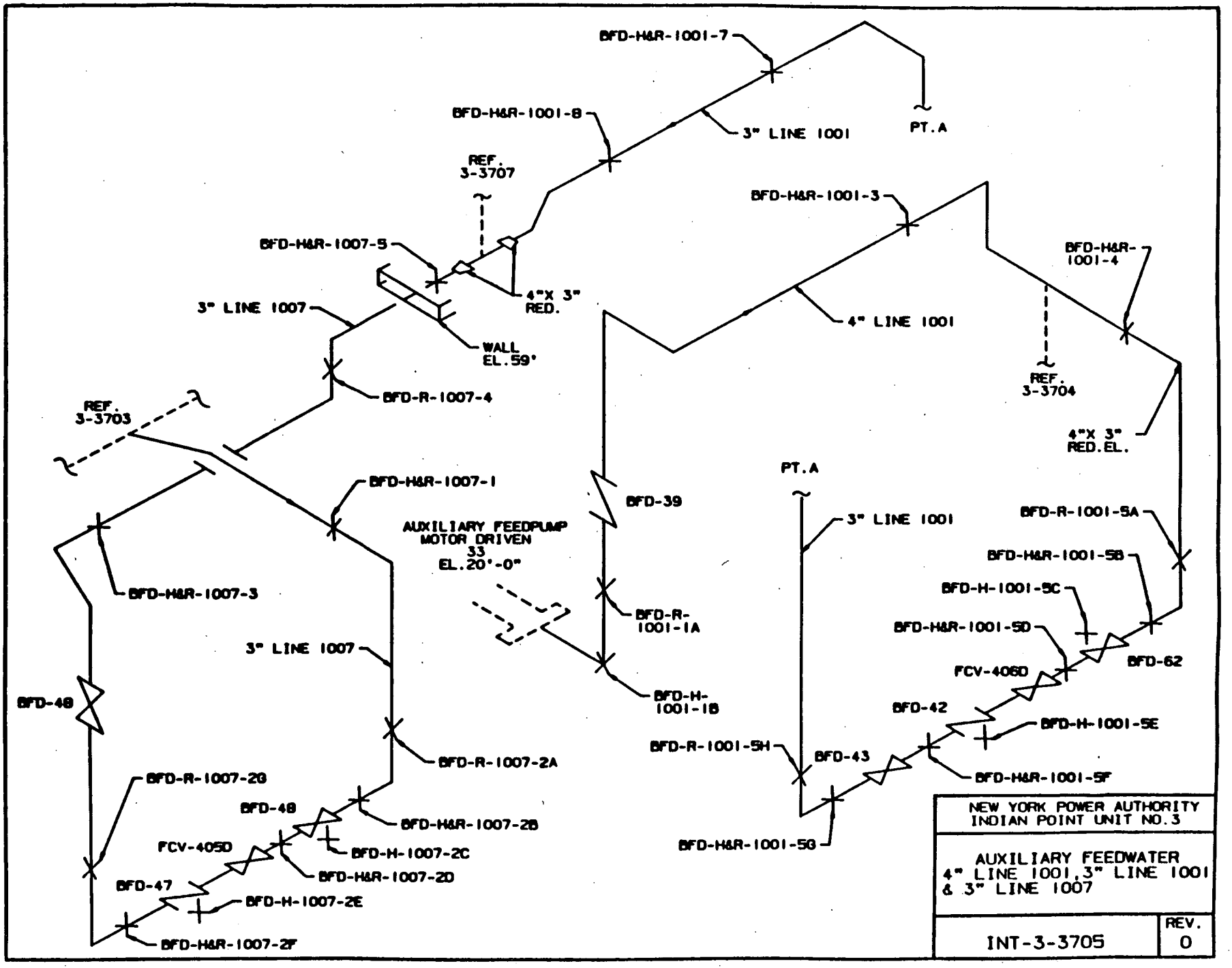
BFD-H&R-1001-7
PT.A
3" LINE 1001
BFD-H&R-1001-8
REF.
3-3707
BFD-H&R-1001-3
BFD-H&R-1007-5
4"X 3"
RED.
BFD-H&R-
1001-4
3" LINE 1007
WALL
EL.59'
4" LINE 1001
REF.
3-3704
BFD-R-1007-4
REF.
3-3703
4"X 3"
RED.EL.
PT.A
BFD-H&R-1007-1
BFD-39
3" LINE 1001
BFD-R-1001-5A
AUXILIARY FEEDPUMP
MOTOR DRIVEN
33
EL.20'-0"
BFD-H&R-1001-5B
BFD-H-1001-5C
BFD-H&R-1007-3
BFD-R-
1001-1A
BFD-H&R-1001-5D
3" LINE 1007
BFD-62
FCV-406D
BFD-H-
1001-1B
BFD-42
BFD-48
BFD-H-1001-5E
BFD-R-1001-5H
BFD-43
BFD-R-1007-2A
BFD-H&R-1001-5F
BFD-R-1007-2G
BFD-48
BFD-H&R-1007-2B
BFD-H&R-1001-5G
FCV-405D
BFD-H-1007-2C
BFD-H&R-1007-2D
BFD-47
BFD-H-1007-2E
BFD-H&R-1007-2F
NEW YORK POWER AUTHORITY
INDIAN POINT UNIT NO.3
AUXILIARY FEEDWATER
4" LINE 1001,3" LINE 1001
& 3" LINE 1007
INT-3-3705
REV.
0

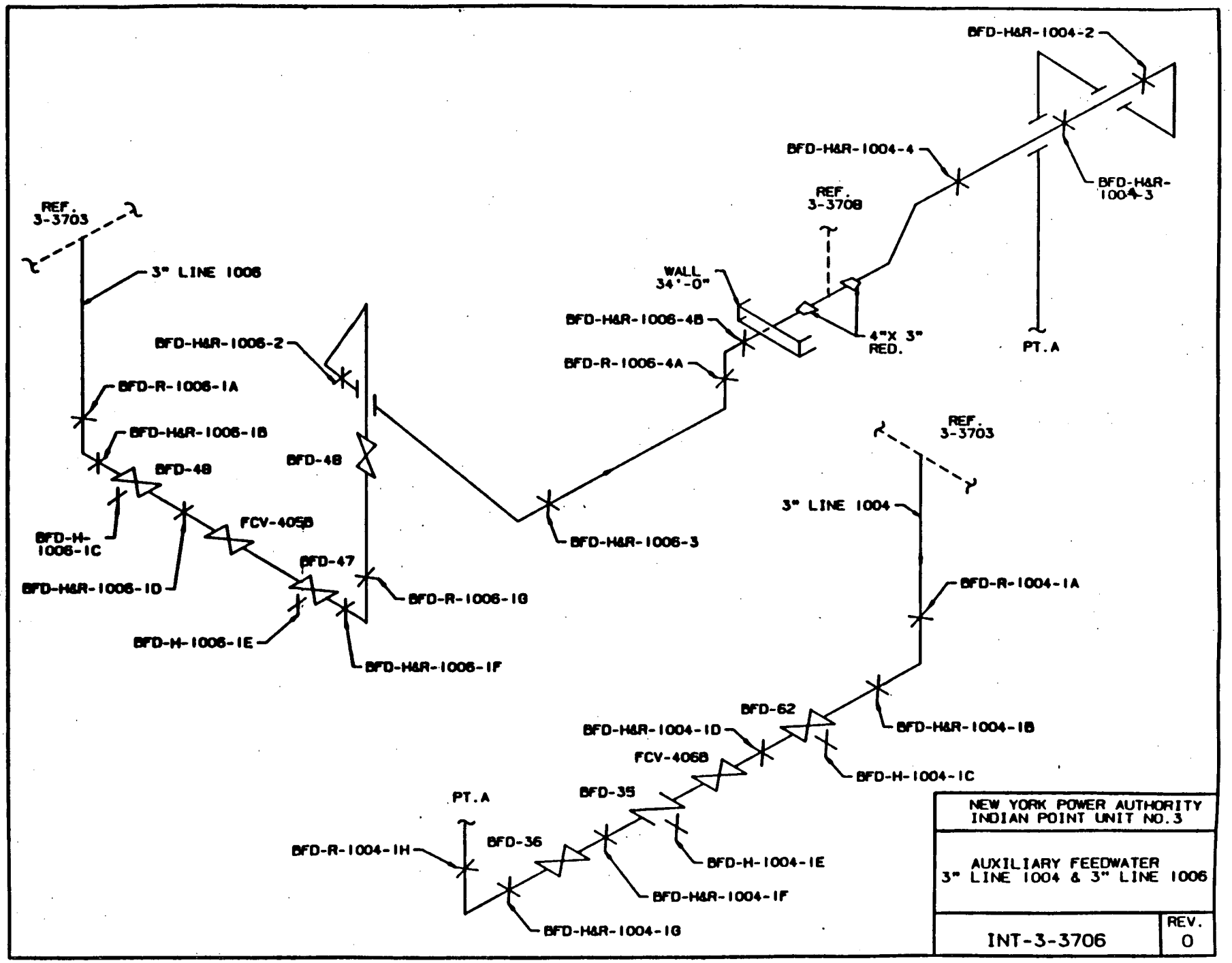
BFD-H&R-1004-2
BFD-H&R-1004-4
BFD-H&R-1004-3
REF. 3-3708
WALL 34'-0"
4"X 3" RED.
PT.A
BFD-H&R-1006-4B
BFD-R-1006-4A
REF. 3-3703
3" LINE 1006
BFD-H&R-1006-2
BFD-R-1006-1A
BFD-H&R-1006-1B
BFD-48
BFD-46
FCV-405B
BFD-H-1006-1C
BFD-H&R-1006-1D
BFD-47
BFD-R-1006-1G
BFD-H-1006-1E
BFD-H&R-1006-1F
BFD-H&R-1006-3
REF. 3-3703
3" LINE 1004
BFD-R-1004-1A
BFD-62
BFD-H&R-1004-1B
BFD-H&R-1004-1D
FCV-406B
BFD-H-1004-1C
BFD-35
PT.A
BFD-36
BFD-R-1004-1H
BFD-H-1004-1E
BFD-H&R-1004-1F
BFD-H&R-1004-1G
NEW YORK POWER AUTHORITY
INDIAN POINT UNIT NO.3
AUXILIARY FEEDWATER
3" LINE 1004 & 3" LINE 1006
INT-3-3706
REV.
0

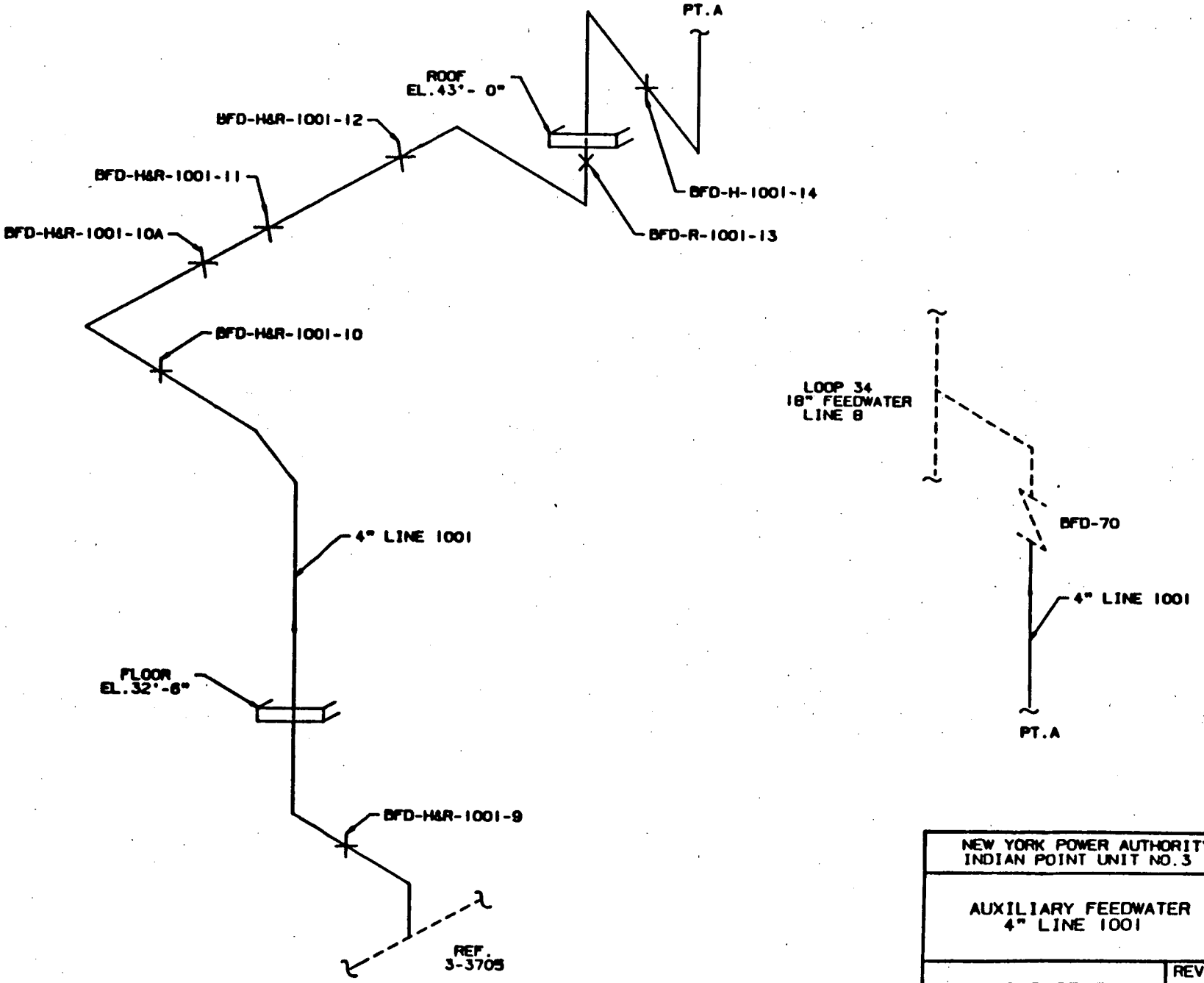

NEW YORK POWER AUTHORITY INDIAN POINT UNIT NO.3	
AUXILIARY FEEDWATER 4" LINE 1001	
INT-3-3707	REV. 0

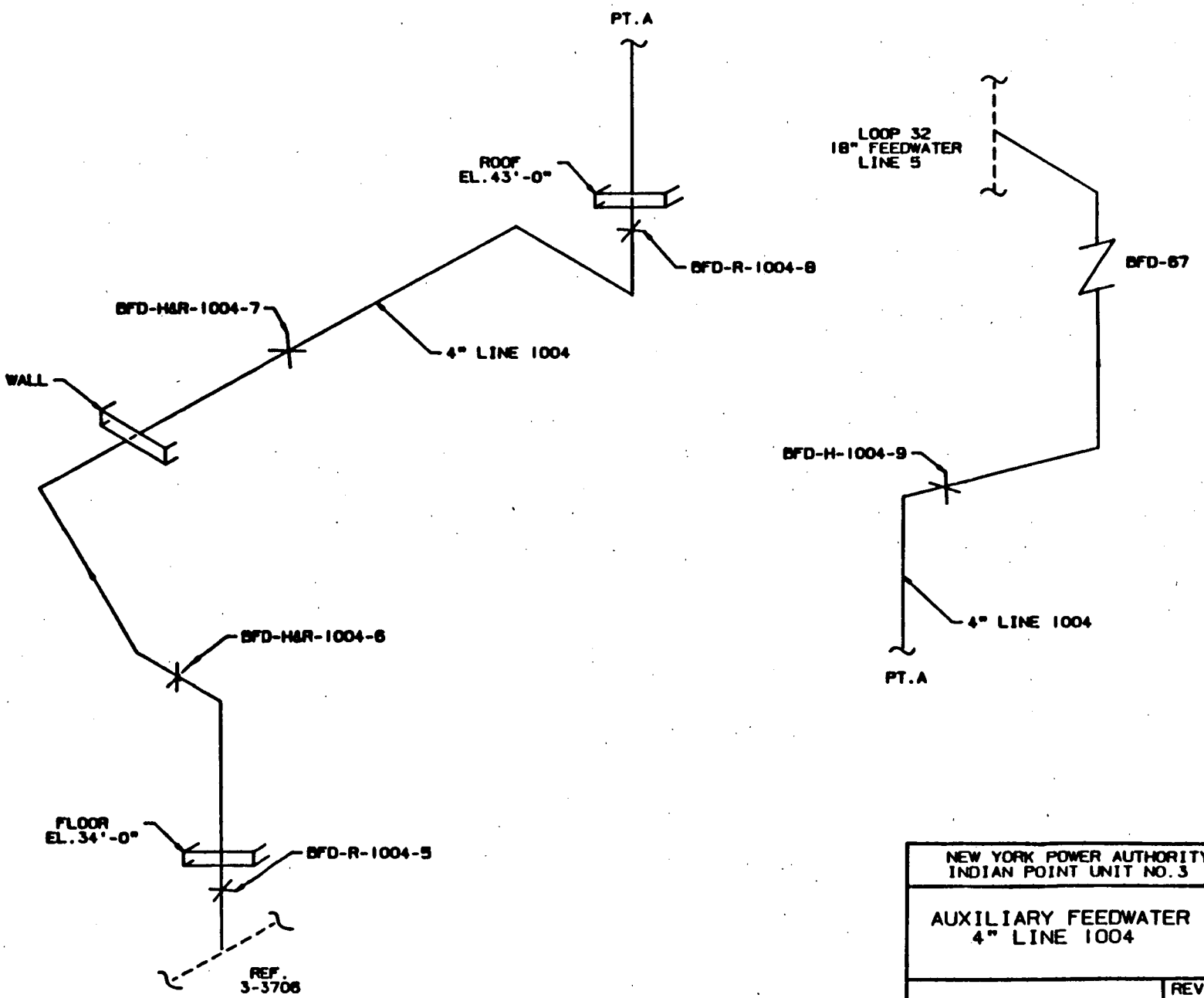

NEW YORK POWER AUTHORITY INDIAN POINT UNIT NO.3	
AUXILIARY FEEDWATER 4" LINE 1004	
INT-3-3708	REV. 0

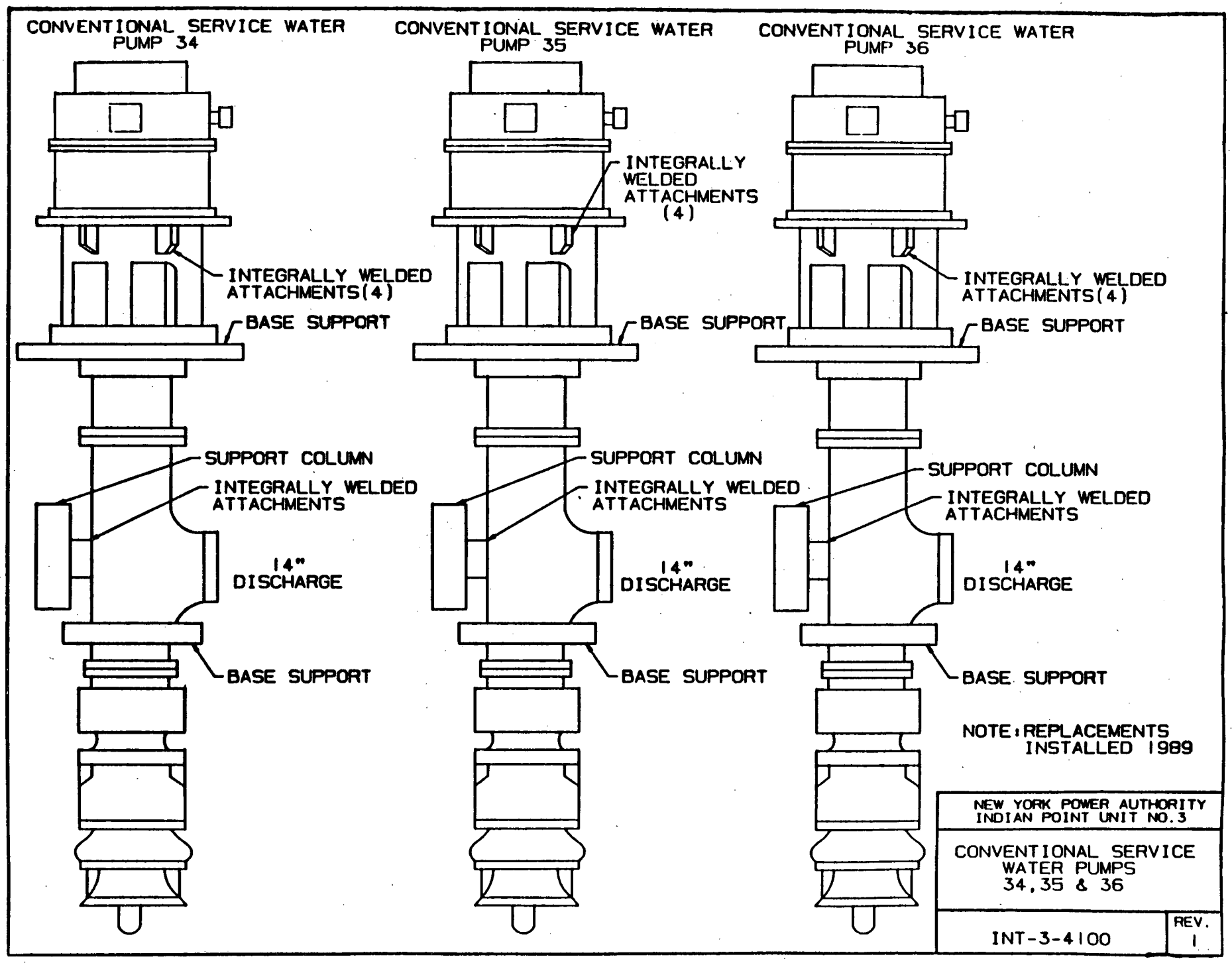
CONVENTIONAL SERVICE WATER PUMP 34
CONVENTIONAL SERVICE WATER PUMP 35
CONVENTIONAL SERVICE WATER PUMP 36
INTEGRALLY WELDED ATTACHMENTS (4)
INTEGRALLY WELDED ATTACHMENTS(4)
BASE SUPPORT
SUPPORT COLUMN
INTEGRALLY WELDED ATTACHMENTS
14" DISCHARGE
NOTE: REPLACEMENTS INSTALLED 1989
NEW YORK POWER AUTHORITY
INDIAN POINT UNIT NO.3
CONVENTIONAL SERVICE WATER PUMPS 34, 35 & 36
INT-3-4100
REV. 1

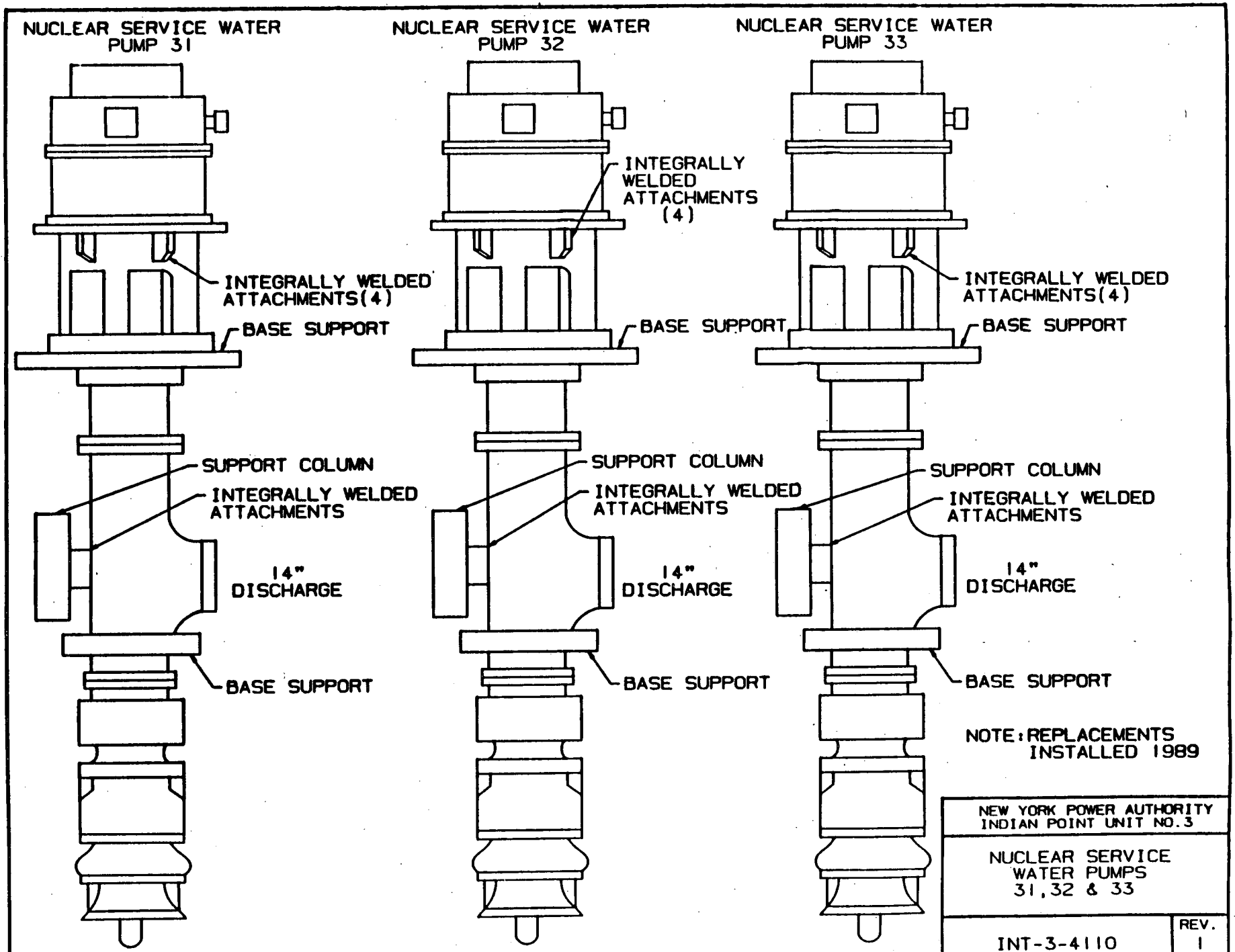

NEW YORK POWER AUTHORITY
INDIAN POINT UNIT NO. 3

NUCLEAR SERVICE WATER PUMPS 31, 32 & 33

INT-3-4110

REV. 1

BORIC ACID TRANSFER PUMP CSAPBA1-31

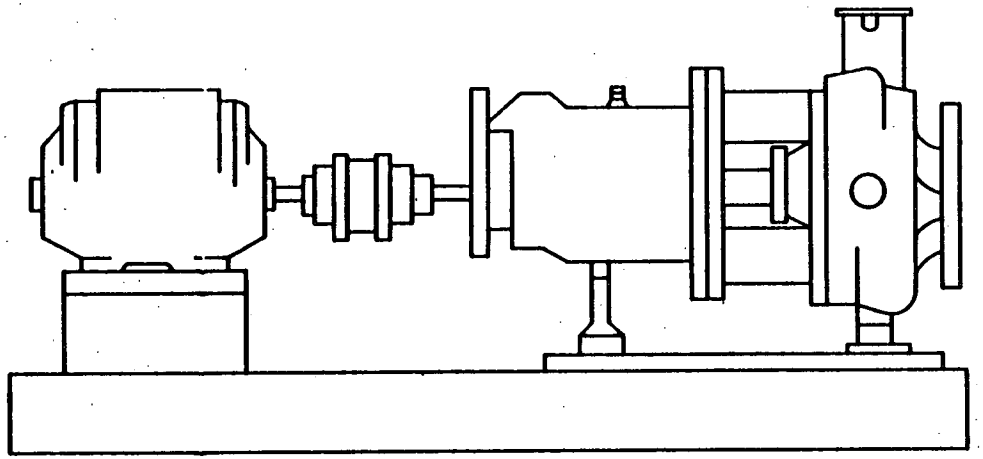

BORIC ACID TRANSFER PUMP CSAPBA2-32

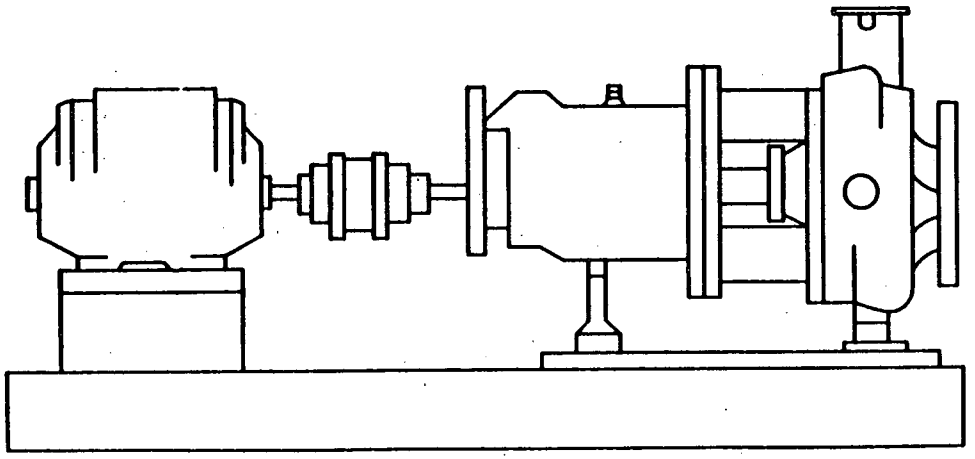

NEW YORK POWER AUTHORITY INDIAN POINT UNIT NO.3	
BORIC ACID TRANSFER PUMPS CSAPBA1-31 & CSAPBA2-32	
INT-3-4120	REV. 0

COMPONENT COOLING PUMP ACAPCC1-31

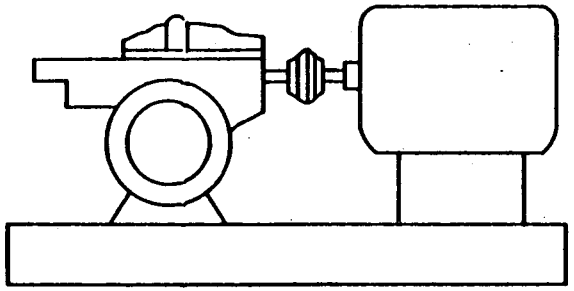

COMPONENT COOLING PUMP ACAPCC2-32

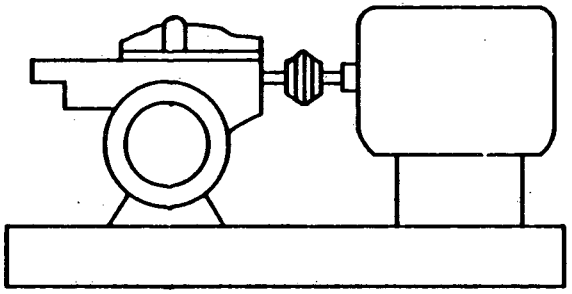

COMPONENT COOLING PUMP ACAPCC3-33

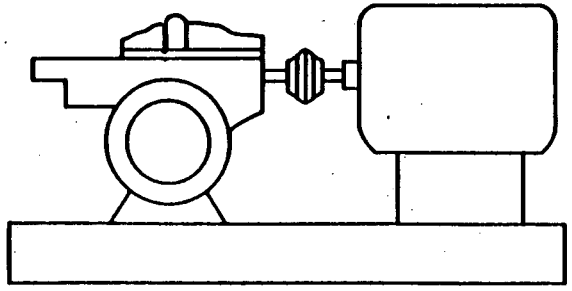

NEW YORK POWER AUTHORITY INDIAN POINT UNIT NO.3	
COMPONENT COOLING PUMPS ACAPCC1-31, ACAPCC2-32 & ACAPCC3-33	
INT-3-4130	REV. 0

AUXILIARY FEEDWATER PUMP (MOTOR DRIVEN) 31

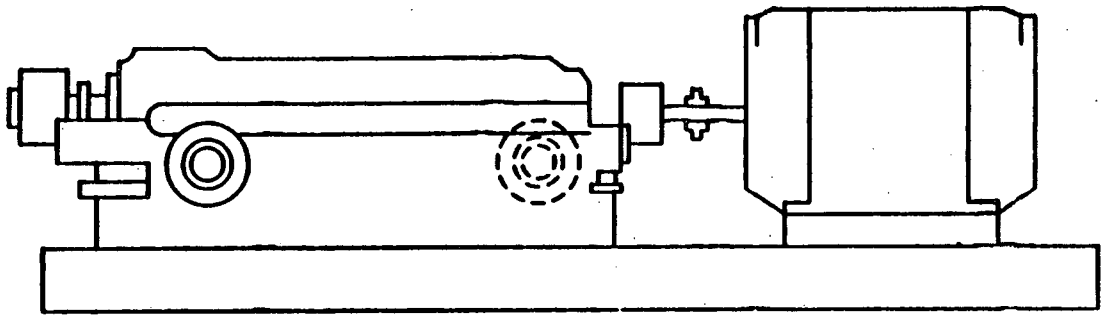

AUXILIARY FEEDWATER PUMP (MOTOR DRIVEN) 33

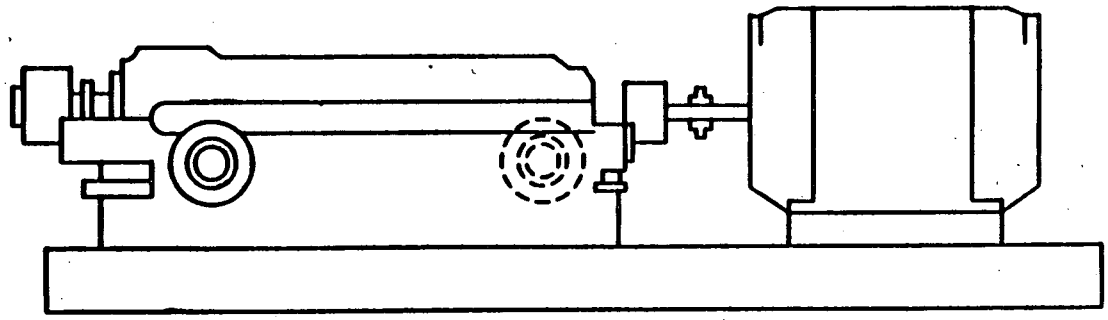

NEW YORK POWER AUTHORITY INDIAN POINT UNIT NO.3	
AUXILIARY FEEDWATER PUMPS (MOTOR DRIVEN) 31 & 33	
INT-3-4140	REV. 0

AUXILIARY FEEDWATER PUMP (TURBINE DRIVEN) 32

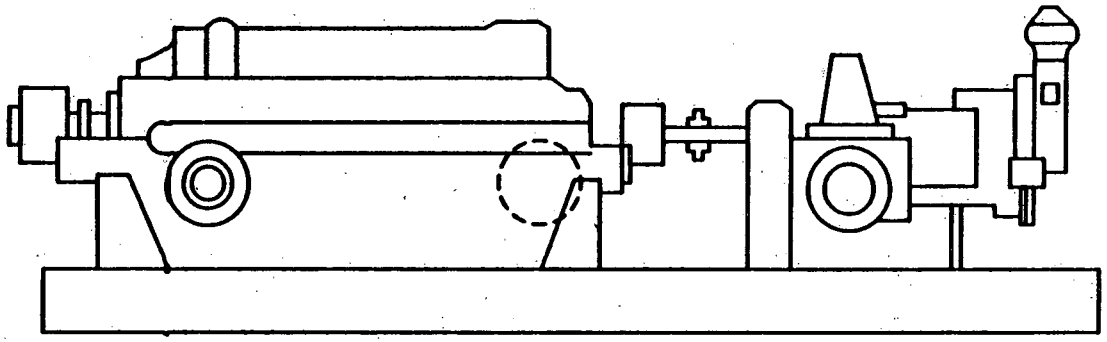

NEW YORK POWER AUTHORITY INDIAN POINT UNIT NO.3	
AUXILIARY FEEDWATER PUMP (TURBINE DRIVEN) 32	
INT-3-4150	REV. 0

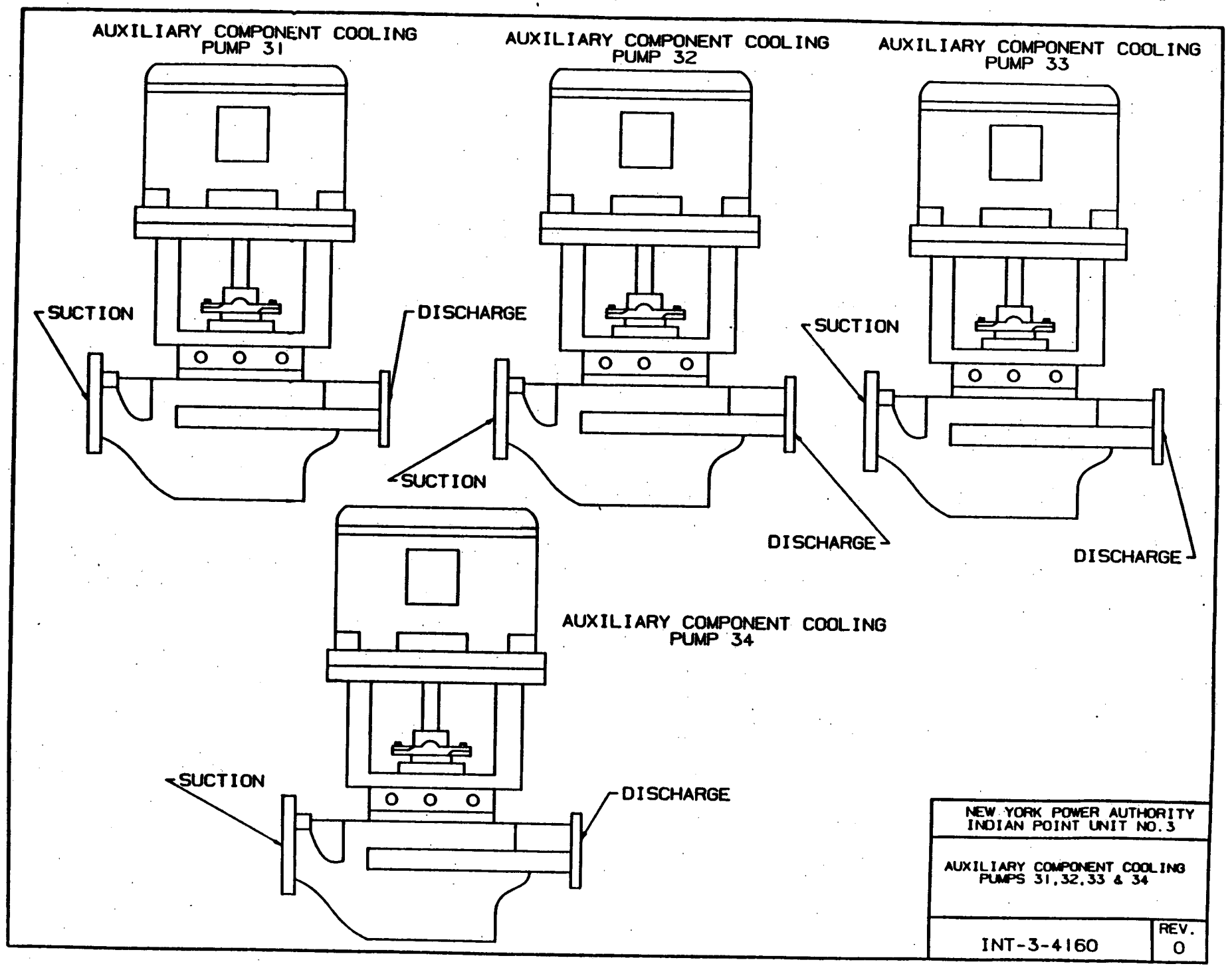
AUXILIARY COMPONENT COOLING PUMP 31
SUCTION
DISCHARGE
AUXILIARY COMPONENT COOLING PUMP 32
SUCTION
DISCHARGE
AUXILIARY COMPONENT COOLING PUMP 33
SUCTION
DISCHARGE
AUXILIARY COMPONENT COOLING PUMP 34
SUCTION
DISCHARGE
NEW YORK POWER AUTHORITY
INDIAN POINT UNIT NO. 3
AUXILIARY COMPONENT COOLING PUMPS 31, 32, 33 & 34
INT-3-4160
REV. 0

SPENT FUEL PIT PUMP ACAPSF1-31

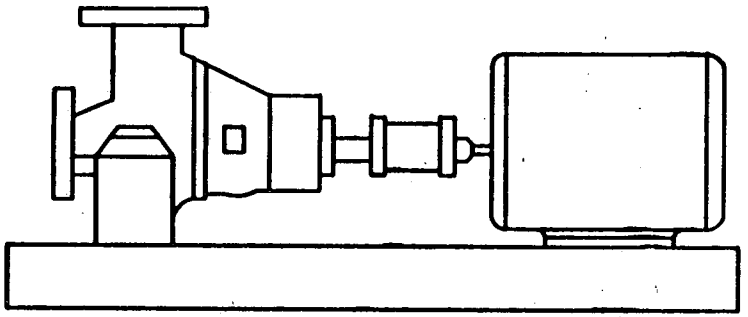

SPENT FUEL PIT STRAINER ACSRF1•

•:UNDERWATER

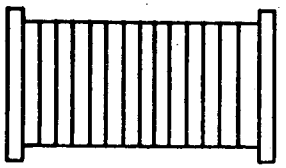

SPENT FUEL PIT PUMP ACAPSF2-32

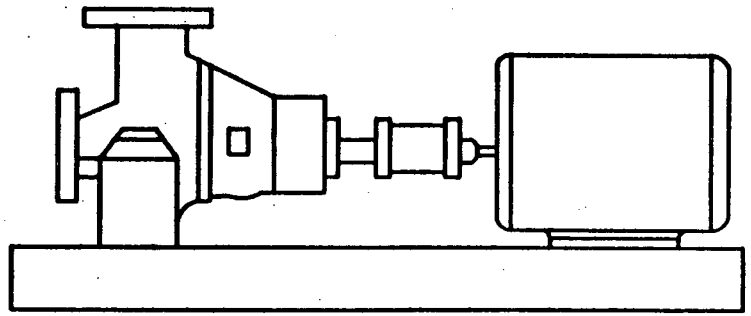

NEW YORK POWER AUTHORITY INDIAN POINT UNIT NO.3	
SPENT FUEL PIT PUMPS ACAPSF1-31 & ACAPSF2-32 SPENT FUEL PIT STRAINER ACSRSF1	
INT-3-4170	REV. 1

CONVENTIONAL SERVICE WATER
PUMP 34 STRAINER

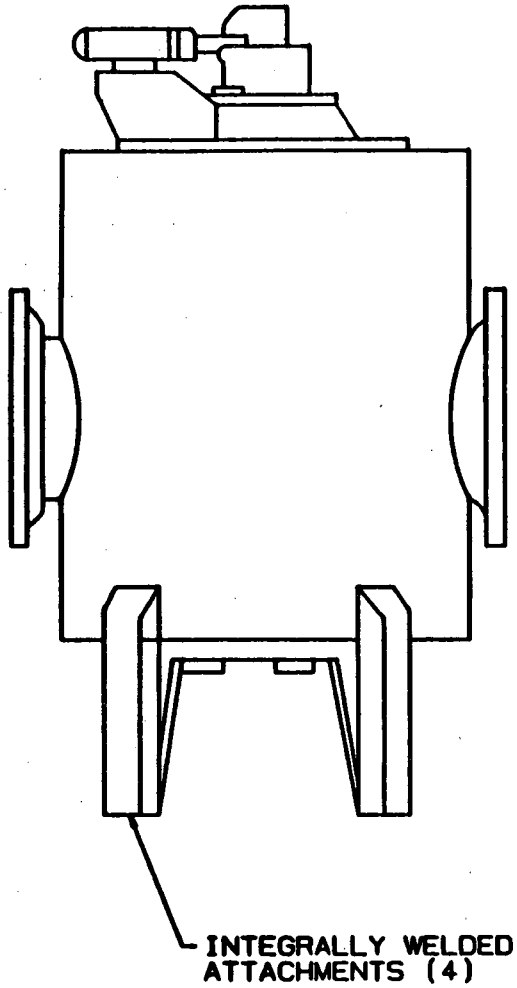

CONVENTIONAL SERVICE WATER
PUMP 35 STRAINER

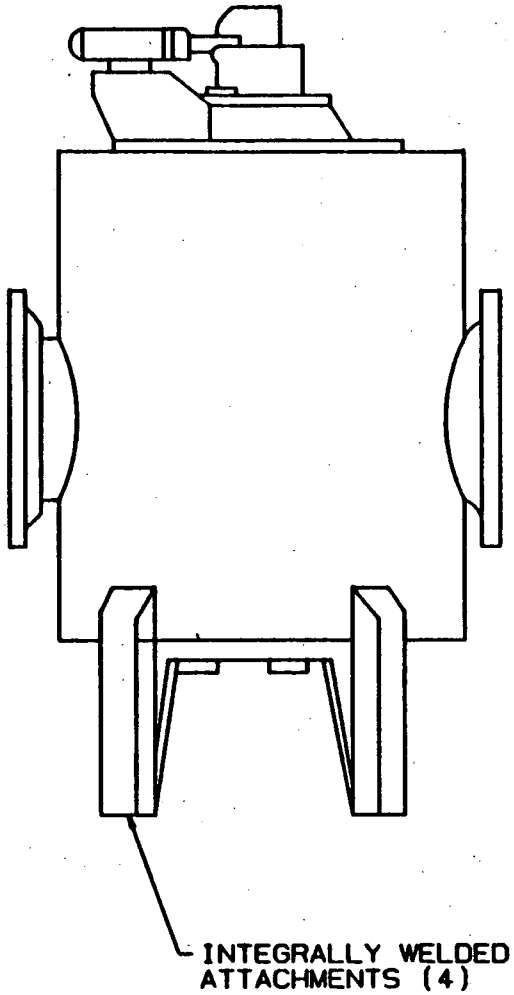

CONVENTIONAL SERVICE WATER
PUMP 36 STRAINER

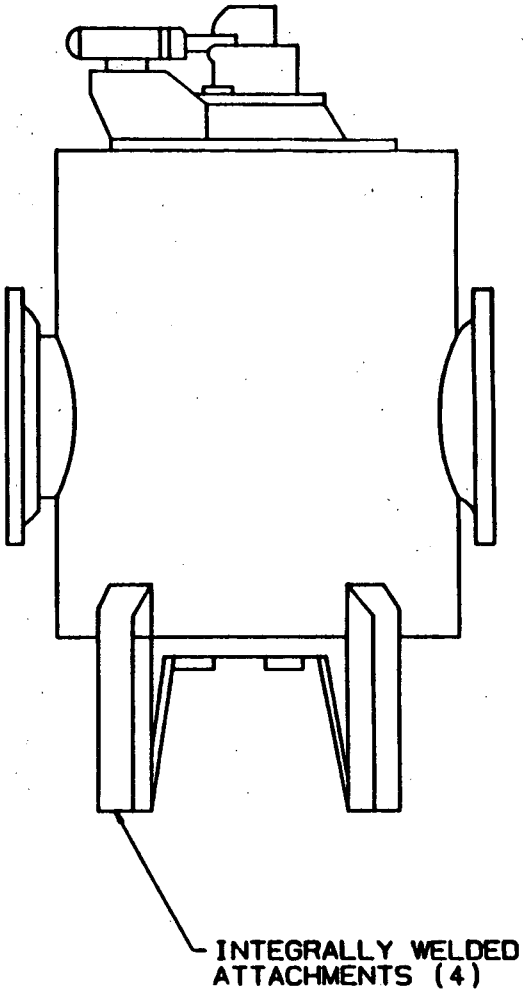

NEW YORK POWER AUTHORITY INDIAN POINT UNIT NO.3	
CONVENTIONAL SERVICE WATER PUMPS 34,35 & 36 STRAINERS	
INT-3-4180	REV. 1

NUCLEAR SERVICE WATER
PUMP 31 STRAINER

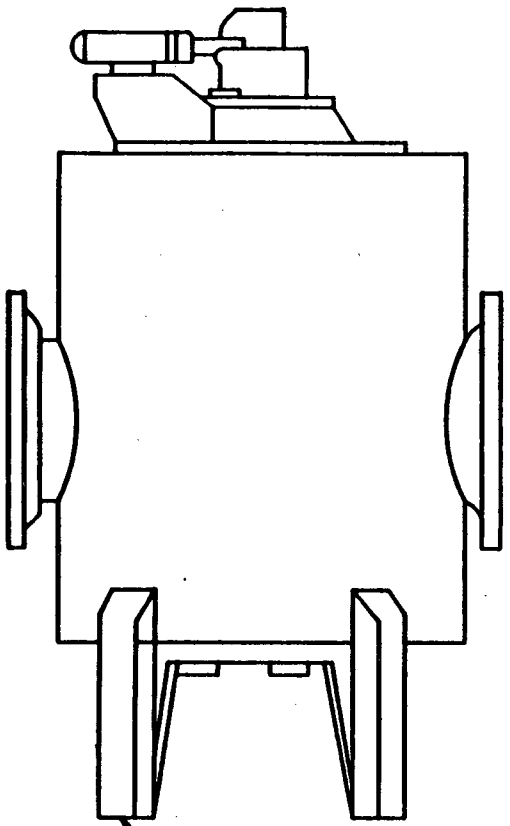

NUCLEAR SERVICE WATER
PUMP 32 STRAINER

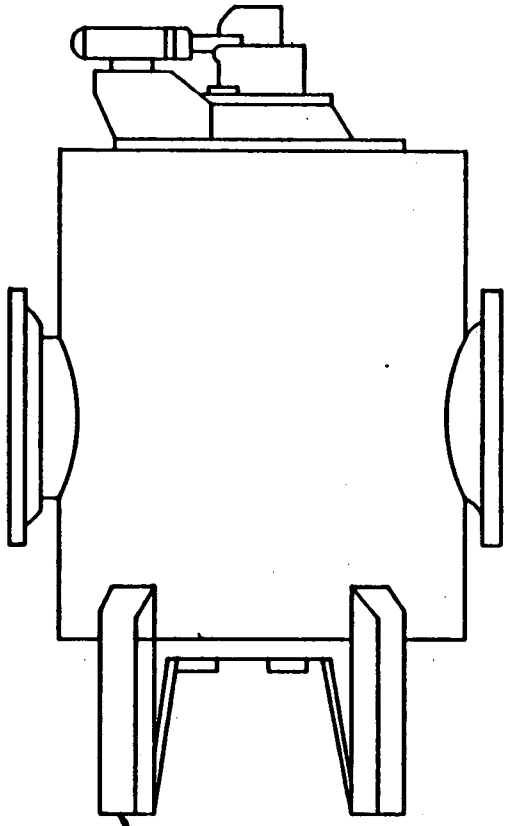

NUCLEAR SERVICE WATER
PUMP 33 STRAINER

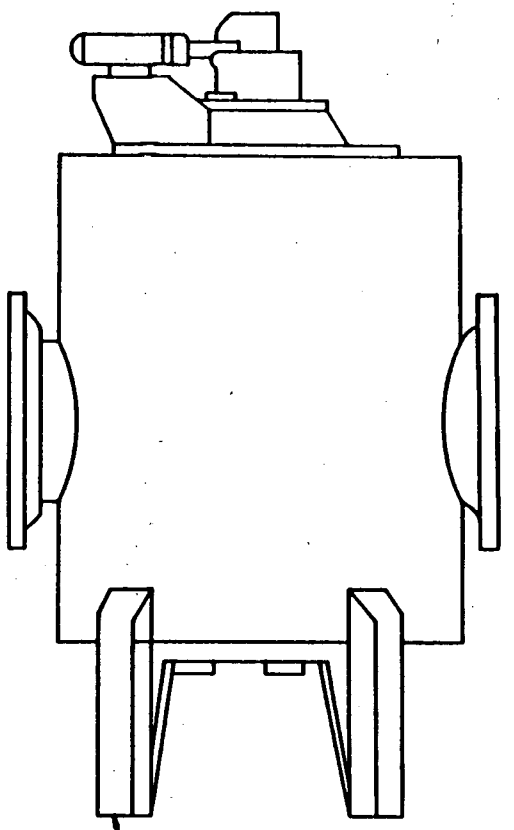

NEW YORK POWER AUTHORITY INDIAN POINT UNIT NO.3	
NUCLEAR SERVICE WATER PUMPS 31, 32 & 33 STRAINERS	
INT-3-4190	REV. 1