CALIBRATION BLOCKS
FOR
INSERVICE EXAMINATION

OF THE

INDIAN POINT UNIT NO.3 NUCLEAR POWER PLANT
P.O.BOX 215
BUCHANAN,NEW YORK 10511

FOR

NEW YORK POWER AUTHORITY
123 MAIN STREET
WHITE PLAINS,NEW YORK 10601

PREPARED BY:

WESTINGHOUSE ELECTRIC CORPORATION
NUCLEAR SERVICE INTEGRATION DIVISION
INSPECTION SERVICES
P.O.BOX 355
PITTSBURGH,PANNSYLVANIA 15230

9005300010 900618
PDR ADOCK 05000286
Q PDR

NEW YORK POWER AUTHORITY
INDIAN POINT NUCLEAR POWER PLANT
UNIT NO. 3
CALIBRATION BLOCKS

1. Introduction

This report presents a listing of the Indian Point Nuclear Power Plant Unit No. 3 calibration blocks used for Inservice Examinations of Class 1, Class 2 and Class 3 components and piping based on the ASME Boiler and Pressure Vessel Code Section XI Requirements. Westinghouse Nuclear Service Integration Division - Inspection Services designed the calibration blocks for New York Power Authority from 1974 thru 1987 as part of the Service contract for Preservice and Inservice Examinations. Calibration blocks were designed based on the following:

A. ASME Boiler and Pressure Vessel Code Section XI 1970 Edition
B. ASME Boiler and Pressure Vessel Code Sectioin XI 1974 Edition thru Summer 1975 Addenda
C. ASME Boiler and Pressure Vessel Code Section XI 1983 Edition thru Summer 1983 Addenda
D. ASME Boiler and Pressure Vessel Code Section V 1974 Edition thru Summer 1975 Addenda
E. ASME Boiler and Pressure Vessel Code Section V 1983 Edition thru Summer 1983 Addenda
F. Westinghouse NSID Alternate Block Design and Layout

2. Westinghouse NSID - Inspection Services Responsibilities

Westinghouse NSID performed the Baseline and 1st Ten Year Interval (1976-1986) Examinations of the Indian Point Unit No. 3 Nuclear Power Plant per ASME Boiler and Pressure Vessel Code Section XI Requirements.

During this period Westinghouse NSID has attempted to upgrade each calibration block to meet the changing requirements of the ASME Boiler and Pressure Vessel Codes Section V and Section XI and to implement improved technology and practice. Calibration blocks used for these examinations were fabricated to those requirements listed in the Introduction Section. This report will detail the differences in actual calibration block design versus the requirements of ASME Boiler and Pressure Vessel Code Section V and Section XI 1983 Edition thru Summer 1983 Addenda which will be in effect for the 2nd Ten Year Internal (1986 thru 1996) of the Indian Point Unit No. 3 Nuclear Power Plant.

3. Report Formation

Data included in this report attempts to recreate the "history" of each calibration block from time of manufacture to release for use at the Indian Point Unit No. 3 Nuclear Power Plant. Manufacturing of the calibration blocks were from a period of 1974 thru 1987. Certain data was unobtainable due to misplaced records or less stringent Quality Control requirements. As technology, practice and Quality Control requirements improved data for each calibration block became substantially more available. Westinghouse NSID has attempted to provide total clear and concise data as is available from Westinghouse Inspection Services, Material Supplier, Manufacturer and Quality Control Records. Each section attempts to contain the following:

A. Calibration Block Summary and Recommendation Sheet to improve or replace existing calibration block based on ASME Boiler and Pressure Vessel Code Section V and XI 1983 Edition up to and including Summer 1983 Addenda.

B. Drawing to show actual or originally submitted calibration block design. Due to less stringent Quality Control requirements in the early design of calibration blocks the drawing shown represents the information that was obtained thru:

1. Westinghouse NSID original drawing and dimensions submitted to manufacturer.

2. Manufacturers dimensions obtained following fabrication.

3. On-site review of existing calibration blocks.

The drawing included in each section is a representation of the applicable calibration block and is intended to be used to determine the general configuration, notch size and location, hole size and location and dimensional requirements. However, when reviewing the "history" of each calibration block the complete Section A thru I should be included.

C. NSID Quality Release or Tooling Specialist Release Form

D. Tooling Specialists Certification Letter of Compliance

E. Tooling Specialists Drawing Dimensional Sheet

F. Westinghouse NSID Dimensional Sheet Requirements

G. Material Certification Papers

H. Heat Treat Records

I. Aperature Card of Calibration Block Drawing Listed Under Section B

4. **ASME Boiler and Pressure Vessel Code Section V and Section XI 1983 Edition thru Summer 1983 Addenda Requirements**

All calibration blocks required for Indian Point Unit No. 3 Nuclear Power Plant 2nd Ten Year Interval shall be fabricated based on the following requirements.

A. Section V 1983 Edition thru Summer 1983 Addenda - Article 4 and Article 5

T-434 - Basic Calibration Block(s) for Vessels

The basic calibration block(s) containing basic calibration reflectors to establish a primary reference response of the equipment and to construct a distance - amplitude correction curve shall be as shown in Figure T-434.1 (Reference Section 6A). The basic calibration reflectors shall be located either in the component material or in a basic calibration block.

T-434.1 - Basic Calibration Block Material

T-434.1.1 - Block Selection

The material from which the block is fabricated shall be from one of the following:

1. nozzle drop out from the component
2. a component prolongation
3. material of the same material specification, product form, and heat treatment as one of the materials being joined

T-434.1.2 - Clad

Where the component material is clad, the block shall be clad to the component clad nominal thickness ± 1/8 in. Deposition of clad shall be by the automatic method used on the component. Where the automatic method is impractical, deposition of clad shall be by the manual method used to cover the circumferential welds of the component. It is desirable to have component materials which have been clad before the drop outs or prolongations are removed.

T-434.1.3 - Heat Treatment

The calibration block shall receive at least the minimum tempering treatment required by the material specification for the type and grade and a postweld heat treatment of at least two hours.

T-434.1.4 - Surface Finish

The finish on the surfaces of the block shall be representative of the surface finishes of the component.

T-434.1.5 - Block Quality

The calibration block material shall be completely examined with a straight beam search unit. Areas that contain indications exceeding the remaining back reflection shall be excluded from the beam paths required to reach the various calibration reflectors.

T-434.2 - Calibration Reflectors

T-434.2.1 - Basic Calibration Reflectors

The side of a hole drilled with its axis parallel to the examination surface is the basic calibration reflector. A square notch shall also be used. The reflecting surface of the notches shall be perpendicular to the block surface. See Figure T-434.1 (Reference Section 6A).

T-434.2.2 - Scribe Line

A scribe line as shown in Figure T-434.1 (Reference Section 6A) shall be made in the thickness direction through the in-line hole center lines and continued across the two examination surfaces of the block.

T-434.2.3 - Additional Reflectors

Additional reflectors may be installed; these reflectors shall not interfere with establishing the primary reference.

T-434.3 - Basic Calibration Block Configuration

T-434.1 (Reference Section 6A) shows block configuration with hole size and location. Each weld thickness on the component must be represented by a block having a thickness relative to the component weld as shown in Figure T-434.1 (Reference

Section 6A). Where the block thickness ± 1 in. spans two of the weld thickness ranges shown in Figure T-434.1 (Reference Section 6A), the block's use shall be acceptable in those portions of each thickness range covered by 1 in. The holes shall be in accordance with the thickness of the block. Where two or more base material thicknesses are involved, the calibration block thickness is determined from the average thickness of the weld.

T-434.3.1 - Welds in Materials with Diameters Greater than 20 in.

For examination of welds in materials where the diameter is greater than 20 in., a block of essentially the same curvature, or, alternately, a flat basic calibration block, shall be used.

T-434.3.2 - Welds in Materials with Diameters 20 in. and Less

The basic calibration block shall be curved for welds in materials with diameters 20 in. and less. A single curved basic calibration block may be used to calibrate the examination on surfaces in the range of curvature from 0.9 to 1.5 times the basic calibration block diameter. For example, an 8 in. diameter curved block may be used to calibrate the examination on surfaces in the range of curvature from 7.2 to 12 in. diameter. The curvature range from 0.94 to 20 in. diameter requires six block curvatures as indicated in Figure T-434.2 (Reference Section 6B) for any thickness range as indicated in Figure T-434.1 (Reference Section 6A).

T-434.4 - Retention and Control

All basic calibration blocks for the examination shall meet the retention and control requirements of the referencing Code System.

T-535 - Bolting Material

Procedures used for ultrasonic examination of bolting material bolts, studs, and nuts shall conform to the requirements of SA-388 as modified by the following subparagraphs. Calibration blocks in accordance with Tables T-535.1 (Reference Section 6C) and T-535.2 (Reference Section 6C) shall be used for straight beam calibration. Tables T-535.1 (Reference Section 6C) and T-535.2 (Reference Section 6C) show relationships between examined material diameter (d), length (L), and calibration block diameter (D), and length (L). Flat bottom holes shall be as shown in Figure T-535.1 (Reference Section 6C) drilled a minimum of 1 1/2 in. deep in the axial direction of the block. Calibration block material and examination surface finish shall be the same or equivalent to the bolting under examination.

T-543 - Basic Calibration Block(s)

The basic calibration reflectors shall be used to establish a primary reference response of the equipment. The basic calibration reflectors may be located either in the component material or in a basic calibration block. Where the thickness ± 1 in. spans two of the weld thickness ranges shown in Figure T-546.1 (Reference Section 6D), the blocks use shall be acceptable in those portions of each thickness range covered by 1 in.

T-543.1 - Basic Calibration Block Material

T-543.1.1 - Block Selection

The material from which the block is fabricated shall be of the same product form, and material specification or equivalent P-number grouping as one of the materials being examined. For the purposes of this paragraph, P-No's. 1, 3, 4 and 5 materials are considered equivalent. For calibration blocks for dissimilar metal welds, the material selection shall be based on the material on the side of the weld from which the examination

will be conducted: if the examination will be conducted from both sides, calibration reflectors shall be provided in both materials. Where two or more base material thicknesses are involved, the calibration block thickness shall be determined by the average thickness of the weld.

T-543.1.2 - Clad

Where the component material is clad, the block shall be clad by the same welding procedure as the production part. Where the automatic method is impractical, disposition of clad shall be by the manual method. It is desirable to have component materials which have been clad before the dropouts or prolongations are removed.

T-543.1.3 - Heat Treatment

The calibration block shall receive at least the minimum tempering treatment required by the material specification for the type and grade, and also a post weld heat treatment of at least two hours, if the calibration block contains weld(s) other than cladding.

T-543.1.4 - Surface Finish

The finish on the surfaces of the block shall be representative of the surface finishes on the components.

T-543.1.5 - Block Quality

The calibration block material shall be completely examined with a straight beam search unit. Areas that contain an indication exceeding the remaining back reflection shall be excluded from the beam paths required to reach the various reflectors.

T-543.2 - Calibration Reflectors

T-543.2.1 - Basic Calibration Reflectors

The calibration reflectors are specified in T-546 and T-547.

T-543.2.2 - Additional Reflectors

Additional reflectors may be installed; these reflectors shall not interfere with establishing the primary reference.

T-543.3 - Calibration Block Configuration

Calibration block configuration requirements are specified in T-546 and T-547.

T-543.3.1 - Materials with Diameters Greater than 20 in.

For examinations in materials where the examination surface diameter is greater than 20 in., a block of essentially the same curvature, or, alternately a flat basic calibration block, shall be used.

T-543.3.2 - Materials with Diameters 20 in., and Less.

The basic calibration block shall be curved for materials with diameters 20 in. and less. Except where otherwise stated in this Article, a single curved basic calibration block may be used to calibrate the examination on surfaces in the range of curvature from 0.9 to 1.5 times the basic calibration block diameter. For example, an 8 in. diameter curved block may be used to calibrate the examination on surfaces in the range of curvature from 7.2 in. to 12 in. diameter. The curvature range from 0.94 in. to 20 in. diamter requires 6 block curvatures as indicated in Article 4, Figure T-434.2 (Reference Section 6B) for any thickness range.

T-543.3.3 As an alternate to the requirements in T-543.3.1 when examining from the convex surface by the straight beam contact technique, Appendix A may be used.

T-546 - Welds in Wrought and Cast Ferritic Product Forms, Excluding Pipe

T-546.1 - Basic Calibration

T-546.1.1 - Basic Calibration Block

The basic calibration block shall be as specified in T-543 and shall use side drilled holes as calibration reflectors. See Figure T-546.1 (Reference Section 6D).

T-547 - Ferritic Welds in Ferritic Pipe

T-547.1 - Basic Calibration

T-547.1.1 - Basic Calibration Block (See Figure 547.1) (Reference Section 6E).

The basic calibration block for weldments shall be a section of pipe of the same nominal size, schedule, heat treatment, and material specification or equivalent P-Number grouping as one of the materials being examined. For the purposes of this paragraph P-No's. 1, 3, 4 and 5 materials are considered equivalent. The block size and reflector locations shall be adequate to perform calibration for the beam angles used. The surface finish of the calibration block shall be representative of the surface finish of the piping.

T-547.1.2 - Basic Calibration Reflectors

The basic calibration reflectors shall be longitudinal and with circumferential notches on both the inner and outer surfaces. The sizes and locations of the calibration reflectors are shown in Figure T-547.1 (Reference Section 6E). When side drilled holes are to be used for calibration, the blocks shall be as shown in Figure T-546.1 (Reference Section 6D).

B. SECTION XI 1983 Edition Thru Summer 1983 Addenda-Appendix III

III-3400 - Basic Calibration Blocks

III-3410 - Material

The basic calibration blocks shall be made from material of the same nominal diameter and nominal wall thickness or pipe schedule as the pipe to be examined.

III-3411 - Material Specification

a. The calibration blocks shall be fabricated from one of the materials specified for the piping being joined by the weld.

b. Where the examination is to be performed from only one side of the joint, the calibration block material shall be of the same specification as the material on that side of the joint.

c. If material of the same specification is not available, material of similar chemical analysis, tensile properties, and metallurgical structure may be used.

III-3420 - Surface Finish

The finish on the surfaces of the block shall be representative of the surface finishes of the piping.

III-3430 - Calibration Notches

Basic calibration blocks shall contain circumferential and longitudinal notches whose sides are perpendicular to the surface, at least 1.0 in. long, on the O.D. and I.D. surfaces. Allowable notch configurations are shown in Figure III-3430-1 (Reference Section 6F). Notch width W shall be no greater than 1/4 in.. Notch depth d shall be as specified in Table III-3430-1 (Reference Section 6G). The blocks shall generally conform to the design shown in Figure III-3430-2

(Reference Section 6H). Alternate block design and layout may be used, provided similar beam paths are utilized. Additional notches may be installed; however, they shall not interfere with establishing the primary reference.

III-3440 - Retention and Control

Basic calibration blocks for the piping of a power plant shall be retained by the Owner.

6A. Figure T-434.1 - Basic Calibration Block

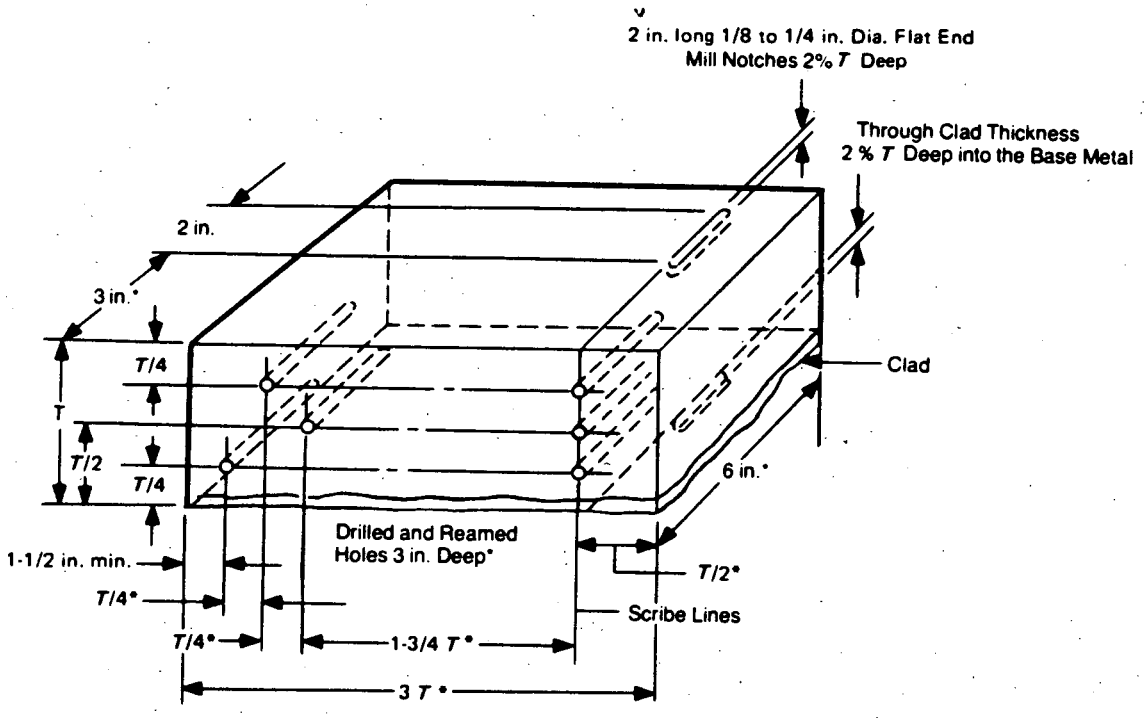

Weld Thickness *(t)*	Basic Calibration Block Thickness *(T)*	Hole Diameter * * *
Over 2 in. thru 4 in.	3 in. or *t*	3/16 in.
Over 4 in. thru 6 in.	5 in. or *t*	1/4 in.
Over 6 in. thru 8 in.	7 in. or *t*	5/16 in.
Over 8 in. thru 10 in.	9 in. or *t*	3/8 in.
Over 10 in. thru 12 in.	11 in. or *t*	7/16 in.
Over 12 in. thru 14 in.	13 in. or *t*	1/2 in.
Over 14 in.	* *	* *

*Minimum dimensions.
**For each increase in thickness of 2 in. or fraction thereof, the hole diameter shall increase 1/16 in.
***The tolerances for hole diameters shall be ± 1/32 in. The tolerances on notch depth shall be +10 and −20%.
The tolerance on hole location through the thickness shall be ± 1/8.
The perpendicular tolerance on Notch Reflecting Surface shall be ± 2 deg.

6B. Figure T-434.2 - Ratio Limits for Curved Surfaces

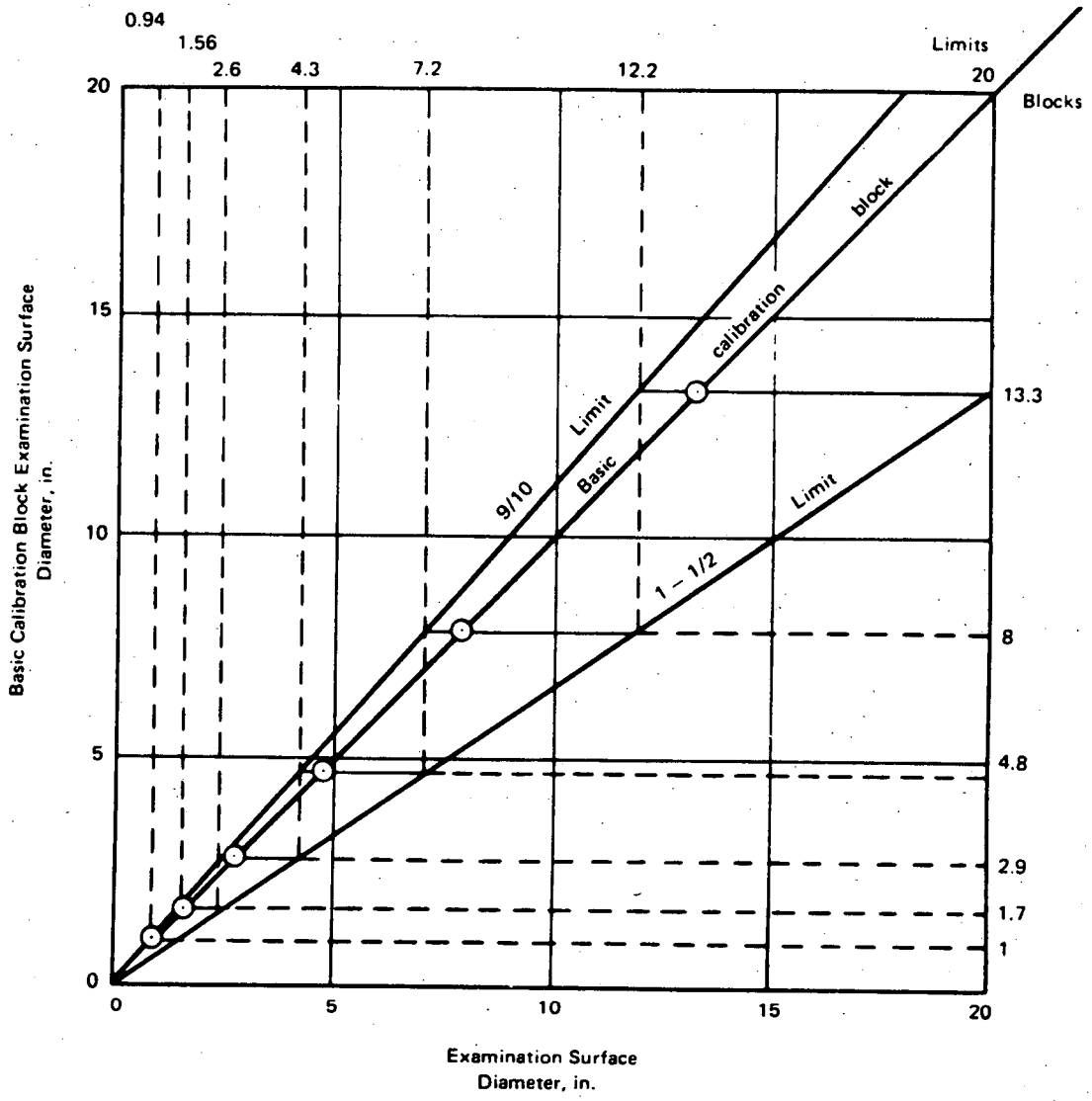

1. Plot examination surface of basic calibration block on diagonal (45 deg.) line.
2. Draw horizontal line through that point from the $^{9}/_{10}$ to the $1^{1}/_{2}$ limit line.
3. The ends of this line read on the horizontal scale give the range of examination surface diameters which may be examined with a system calibrated on this block.

Note: Thickness range requirements shall also be satisfied.

6C. Table Figure T-535.1 - Flat Bottom Hole Per Dimensional Diameter and Straight Beam (FBH) Calibration Block. Table T-535.2 - Block Designation Per Length and Hole Location

TABLE T-535.1
FLAT BOTTOM HOLE PER DIMENSIONAL DIAMETER

$D = d \pm 1$ in.	Flat Bottom Hole Diam. ± 1/32 in.
Up to 1 in.	1/16 in.
Over 1 to 2 in.	1/8 in.
Over 2 to 3 in.	3/16 in.
Over 3 to 4 in.	5/16 in.
Over 4 in.	3/8 in.

TABLE T-535.2
BLOCK DESIGNATION PER LENGTH AND HOLE LOCATION

Block Designation	Block Length, ℓ	Flat Bottom Hole Location, ℓ
A	ℓ/8 + hole depth	D/4 of block end
B	ℓ/2 + hole depth	Center line of block end
C	ℓ/4 + hole depth	Center line of block end

NOTE:
(1) A tolerance of ±5% may be applied.

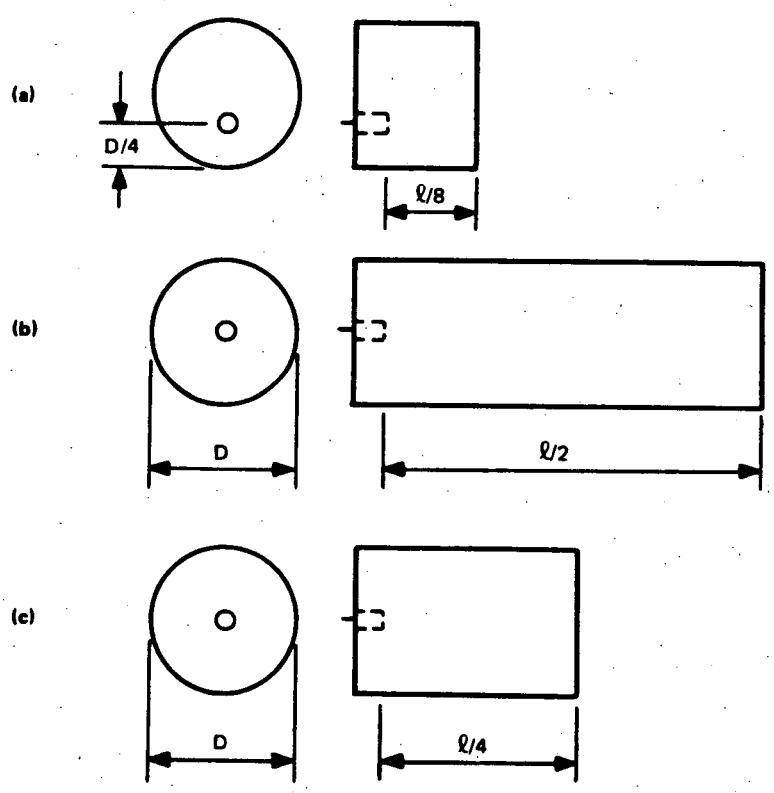

FIG. T-535.1 STRAIGHT BEAM (FBH) CALIBRATION BLOCK

6D. Figure T-546.1 - Basic Calibration Block

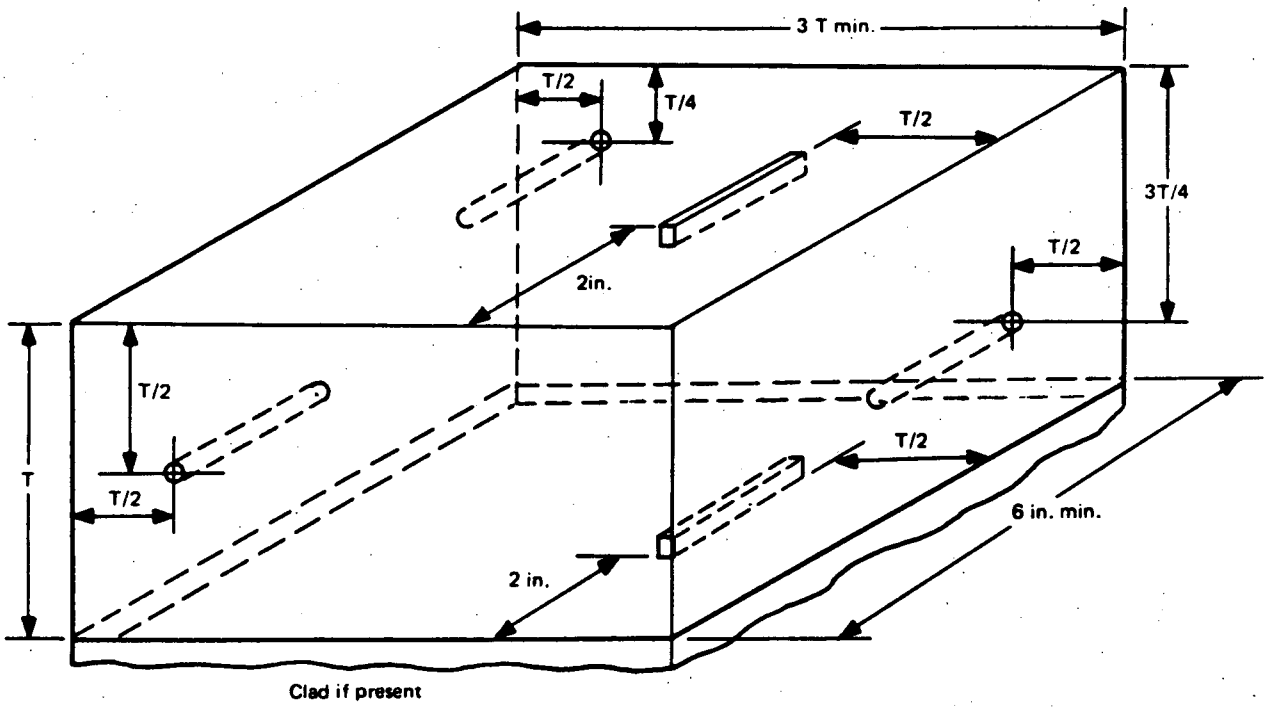

Weld Thickness (t)	Basic Calibration Block Thickness (T)	Hole Diameter	Notch Size:
1 in. or Less	3/4 in. or t	3/32 in.	Width = 1/8 in. to 1/4 in.
Over 1 in. through 2 in.	1-1/2 in. or t	1/8 in.	
Over 2 in. through 4 in.	3 in. or t	3/16 in.	Depth = 2% T
Over 4 in. through 6 in.	5 in. or t	1/4 in.	
Over 6 in. through 8 in.	7 in. or t	5/16 in.	Length = 2 in. min.
Over 8 in. through 10 in.	9 in. or t	3/8 in.	
Over 10 in. See Note (5).			

NOTES:

(1) Holes shall be drilled and reamed a minimum of 1-1/2 in. deep, essentially parallel to the examination surface.

(2) Alternately, the block may be constructed as shown in Fig. T-434.1.

(3) Curved surfaces: for curved surfaces, two curved blocks, one for each representative curvature: or two sets of calibration reflectors oriented 90 deg. from each other shall be used.

(4) Notches may be provided as required.

(5) For each increase in thickness of 2 in. or fraction thereof, the hole diameter shall increase 1/16 in.

(6) The tolerance for hole diameter shall be ± 1/32 in. The tolerance on notch depth shall be + 10 and − 20%. The tolerance on hole location through the thickness shall be ± 1/8 in.

6E. Figure T-547.1 - Angle Beam Calibration (Pipe Welds)

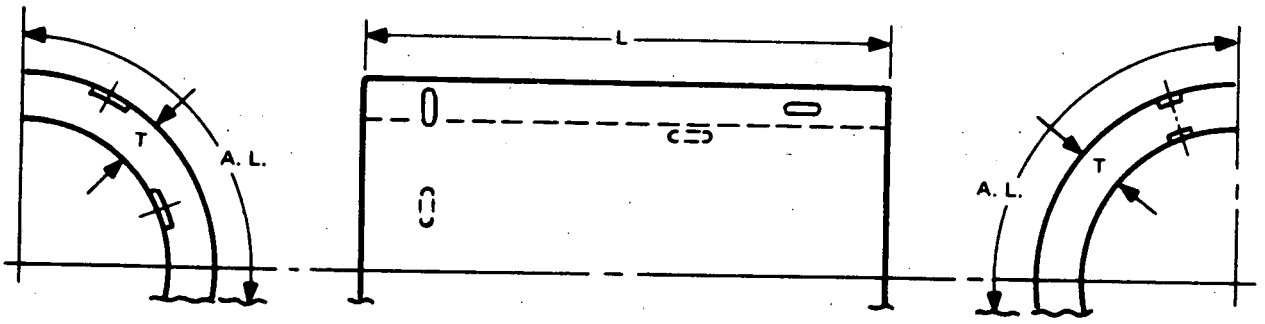

Typical Block Dimensions

Length (*L*) 8 in. *or* 8*T*, whichever is greater

Minimum Arc Length (*A.L.*) (1) for O.D. 4 in. or less: 270 deg.
(2) for O.D. greater than 4 in.: the greater of 3*T* or 8 in.

Specific Notch Dimensions

Length (*L*) — 1 in. minimum

Depth (*D*) — 10% *T* with tolerance $D^{+10\%}_{-20\%}$ of Depth

Width — 1/8 in. to 1/4 in.

Location — not closer than *T* from any block edge

6F. Figure III-3430-1 - Allowable Notch Configurations

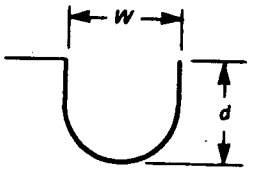

(a) U-Shaped Cross Section
(Typical of Electromachining)

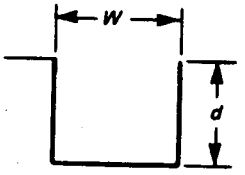

(b) Buttress Cross Section

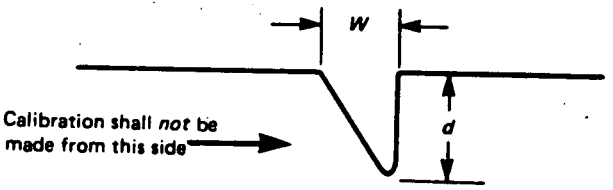

(c) Sawtooth Cross Section

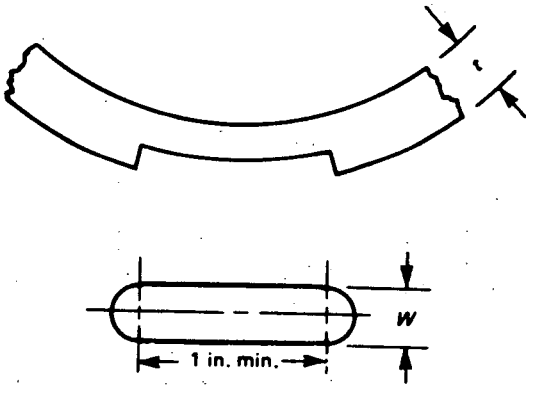

(d) Notch Dimensions

6G. Table III-3430-1 - Surface Notch Depths for Ultrasonic Calibration

Nominal Pipe Wall Thickness t, in.	Notch Depth d, in.	Tolerance
Less than 0.312	$0.10t$	+0.005 in. −0.010 in.
0.312 to 6.0	$0.104t-0.009t^2$	+10% −20%

6H. Figure III-3430-2 - Recommended Design for Basic Calibration Block

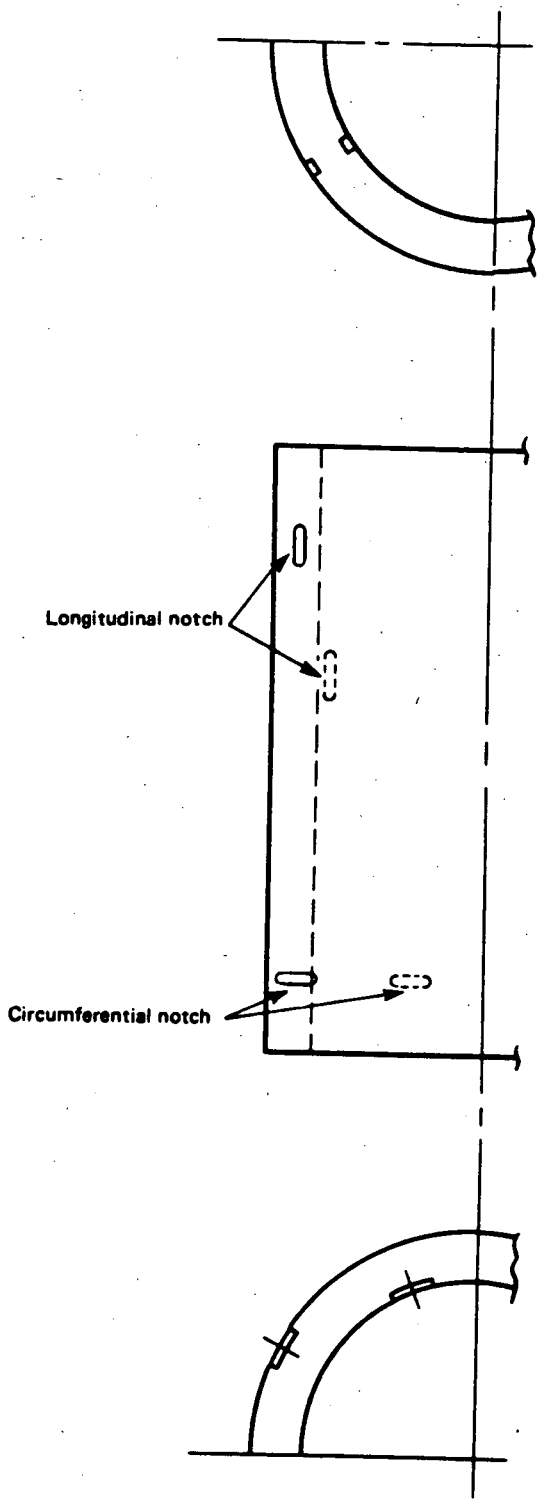

6I. Figure III-3230-1 - Physical Restrictions to the Weld Examination

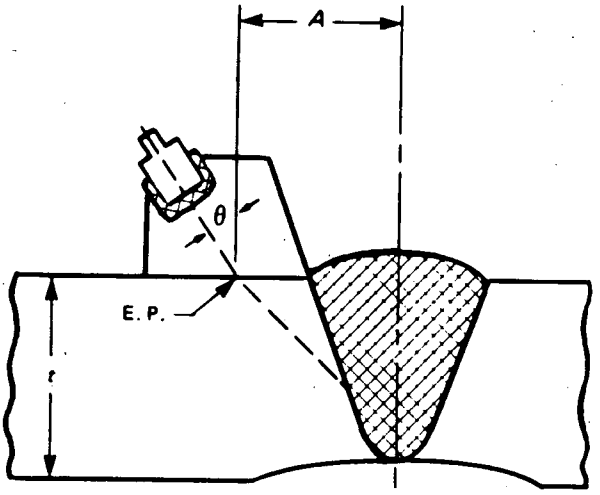

7. Summary

As noted in Section 4 of the report ASME Boiler and Pressure Vessel Code Section V and Section XI 1983 Edition thru Summer 1983 Addenda list requirements and figures for the following calibration blocks.

A. Basic Calibration Block(s) for Vessels Over 2 in. thru 4 in.: Figure T-434.1 (Reference Section 6A).

B. Bolting Calibration Block - Table T-535.1, Figure T-535.1 and Table T-535.2 (Reference Section 6C).

C. Basic Calibration Block for Welds in Wrought and Cast Ferritic Products Forms, Excluding Pipe: Figure T-546.1 (Reference Section 6D).

D. Angle Beam Calibration (Pipe Welds) for Ferritic Welds in Ferritic Pipe: Figure T-547.1 (Reference Section 6E).

Requirements and figures not depicted in ASME Boiler and Pressure Vessel Code Section V and Section XI 1983 Edition thru Summer 1983 Addenda include the following:

E. Austentic Piping

F. Austentic Vessels

Where calibration blocks for Austentic Piping and Vessels are required it will be Westinghouse NSID intent and subsequent recommendation to invoke the following Sections of the ASME Boiler and Pressure Vessel Codes.

A. Section V 1983 Edition thru Summer 1983 Addenda

T-548 - Austentic and High Nickel Alloy Welds

T-548.1 - Discussion

Ultrasonic examination of austentic and high nickel alloy welds is usually more difficult than in ferritic materials, because of the wide variations that may occur in the acoustic properties of austentic and high nickel alloy welds, even those in alloys of the same composition, product form, and heat treatment. It may, therefore, be necessary to modify and/or supplement the provisions of the article in accordance with T-110(E) when examining such welds.

T-110 - Scope

(E) The nondestructive examination methods included in this Section are applicable to most geometries configurations and materials encountered in fabrication under normal conditions. However, special configurations and materials may require modified methods and techniques, in which case the manufacturer shall develop special procedures which are equivalent or superior to the methods and techniques described in this Code Section, and which are capable of producing interpretable examination results under the special conditions. Such special procedures may be modifications or combinations of methods described or referenced in this Code Section, and shall be proved by demonstration to be capable of detecting discontinuities under the special conditions, and such demonstrated capabilities shall be equivalent to the capabilities of the methods described in this Code Section when used under more general conditions. Depending on the quality assurance or quality control system requirements of the referencing Code Section, these special procedures shall be submitted to the Inspector for approval where required, and shall be adopted as part of the manufacturers quality control program.

B. Section XI 1983 Edition thru Summer 1983 Addenda

Article III-1100 General

A. This Appendix defines the ultrasonic (UT) examination methods, equipment, and requirements applicable to Class 1 and 2 ferritic piping systems.

B. The requirements are limited to full penetration butt welds and adjacent base metal in piping systems having a nominal wall thickness of 0.2 in. to 6 in.

C. The requirements are applicable only to similar metal welds in ferritic steels (refer to Supplement 7 of this Appendix for dissimilar metal welds and austentic steels).

D. Alternative examination techniques, calibration block designs, etc., may be used as provided by IMA-2250.

Supplement 7 - Austentic Welds

A. Because of the inherent coarse - grained structure, ultrasonic examination of the following welds may be subject to marked variations in attenuation, velocity, reflection, and refraction at grain boundaries:

1. high alloy steels;
2. high nickel alloys;
3. dissimilar metal welds between combinations of (1) and (2) above and carbon or low alloy steels

B. However, these rules may be used, with the following recommended modifications, when ultrasonic examination of these welds is performed.

1. III-4410 Beam Angle - Add: other angles may be used where metallurgical characteristics impede effective use of 45 degree angle beam.

2. Table III-3430-1 (Reference Section 6F) Calibration Notches - Substitute: depth 10% of t.

3. Figure III-3230-1 - Physical Restrictions to the Weld Examinations (Reference Section 6I) may not apply to austentic materials.

IMA-2250 - Alternative Examinations

Alternative examination methods, a combination of methods, or newly developed techniques may be substituted for the methods specified in this Division, provided the Inspector is satisfied that the results are demonstrated to be equivalent or superior to those of the specified method.

Westinghouse NSID when developing calibration blocks for austentic piping has attempted to incorporate the requirements of the latest Editions of Section V and XI of the ASME Boiler and Pressure Vessel Codes. Also incorporated in the Westinghouse NSID design has been the experience and practice acquired in the examination of austentic piping at various utilities.

8. Conclusion

The calibration blocks utilized by Indian Point Unit No. 3 Nuclear Power Plant in some cases (Reference Recommendation Form for each individual block) do not identically reflect the design required by the ASME Boiler and Pressure Vessel Code Section V and XI 1983 Edition up to and including Summer 1983 addenda. Typical design differences are: Notch location, notch depth, hole location, hole tolerances, arc length and clad length. Westinghouse NSID review of the calibration blocks and based on calibration and examination use during the 1st Inspection Interval

considers these design differences to offer no limitations when performing calibration and examinations as required for the 2nd Inspection Interval.

However, New York Power Authority Indian Point Unit No. 3 should consider modifying the following calibration standards to closer adhere to the requirements of ASME Boiler and Pressure Vessel Code Section V and XI 1983 Edition up to and including Summer 1983 addenda.

1. INT-9 14" SCH 10:

   Add I.D. Circumferential Notch

2. INT-31 Reactor Vessel Closure Head:

   Add cladding to cover 100% of length and width on bottom of block and document hole location through thickness, perpendicular and hole diameter tolerances.

3. INT-32 Steam Generator Channel Head to Tubesheet:

   Add cladding to cover 100% of length and width on bottom of block and document hole location through thickness, perpendicular and hole diameter tolerances.

4. INT-33 Steam Generator Secondary Side:

   Document hole location through thickness, perpendicular and hole diameter tolerances.

5. INT-38 Pressurizer:

   Document hole location through thickness, perpendicular and hole diameter tolerances.

A review by Westinghouse NSID of the calibration blocks utilized by Indian Point Unit No. 3 Nuclear Power Plant in the following cases (Reference Recommendation Form for each individual block) reflect a difference in design that in the opinion of Westinghouse NSID should be replaced to meet the requirements of ASME Boiler and Pressure Vessel Code Section V and Section XI 1983 Edition up to and including Summer 1983 Addenda.

1. INT-1: 1.5"T Pressurizer skirt replace with calibration block designed to Figure T-546.1

2. INT-4: 28" .858"T replace with 28" - 1.04"T designed to Westinghouse NSID design.

3. INT-37: 7"T x 5.75" diameter stud replace with 2 calibration standards (one for Reactor Vessel Closure Head Studs and one for Reactor Coolant Pump Main Flange Bolting) designed to Figure T-535.1.

INDIAN POINT NUCLEAR POWER PLANT UNIT NO. 3

CALIBRATION BLOCKS

IDENTITY	SIZE/SCHEDULE	IDENTITY OR HEAT NUMBER	MATERIAL	COMPONENT/SYSTEM
INT-1	1.5"T x 13.0"L x 4.0"W	B6272	SA516 Grade 70 Carbon Steel	Pressurizer Skirt
INT-2	2.625"T x 8.969"L x 3.969"W	D8770	A376 TP316 Stainless Steel	Reactor Coolant Pipe (Axial)
INT-3	2.813"T x 8.969"L x 3.969"W	D8770	A376 TP316 Stainless Steel	Reactor Coolant Pipe (Circumferential)
INT-4	28"-.858"T	802E03230	A516 Grade 70 Carbon Steel	28" Mainsteam Piping
INT-5	18" Sch 80 .938"T	L64609	A106 Grade B Carbon Steel	18" Sch 80 Feedwater Piping
INT-6	18" Sch 60 .750"T	L03914	A106 Grade B Carbon Steel	18" Sch 60 Feedwater Piping
INT-7	14" Sch 140 1.250"T	2637-4-2	A376 TP316 Stainless Steel	14" Sch 140 RHR Hotleg Takeoff and Pressurizer Surge Piping
INT-8	14" Sch 40 .438"T	71771	A358 TP316 Class 1 Stainless Steel	14" Sch 40 RHR Piping
INT-9	14" Sch 10 .250"T	182	SA312 TP304 Stainless Steel	Reactor Coolant Filter
INT-10	12" Sch 80 .688"T	N13396	A106 Grade B Carbon Steel	12" Sch 80 Mainsteam Piping
INT-11	12" Sch 40S .375"T	8052221	A312 TP316 Stainless Steel	12" Sch 40S RHR Piping
INT-12	10" Sch 160 1.125"T	2633-13-1: 535771	A376 TP316 Stainless Steel	10" Sch 160 Piping
INT-13	10" Sch 140 1.00"T	D61232	A312 TP304 Stainless Steel	10" Sch 140 Accumulator Discharge and Plocap Piping

INDIAN POINT NUCLEAR POWER PLANT UNIT NO. 3

CALIBRATION BLOCKS

IDENTITY	SIZE/SCHEDULE	IDENTITY OR HEAT NUMBER	MATERIAL	COMPONENT/SYSTEM
INT-14	10" Sch 120 .844"T	6-448	A312TP304 Stainless Steel	Seal Water Injection Filters 31 & 32
INT-15	10" Sch 100 .719"T	152177	A106 Grade B Carbon Steel	10" Sch 100 Piping
INT-16R1	10" Sch 40S .365"T	TH5796	A312 TP316 Stainless Steel	10" Sch 40S RHR and Accumulator Discharge Piping
INT-17	8" Sch 160 .906"T	2626-8-1: 535639	A312 TP304 Stainless Steel	8" Sch 160 RHR Piping and Regenerative Heat Exchanger
INT-18	8" Sch 120 .719"T	M0176	A312 TP304 Stainless Steel	8" Sch 120 RHR Piping and Excess Letdown Heat Exchanger
INT-19	8" Sch 80 .500"T	139624	A106 Grade B Carbon Steel	8" Sch 80 Piping
INT-20	8" Sch 40S .322"T	M0937	A312 TP316 Stainless Steel	8" Sch 40S RHR Piping
INT-21	6" Sch 120 .562"T	M9948	A376 TP316 Stainless Steel	6" Sch 120 RHR and Pressurizer Safety Piping
INT-22	6" Sch 80S .432"T	M3458	A312 TP304 Stainless Steel	6" Sch 80S SIS Piping
INT-23	6" Sch 80S .432"T	240393	A106 Grade B Carbon Steel	6" Sch 80S Mainteam Piping
INT-24	6" Sch 40S .281"T	M9959	A376 TP304 Stainless Steel	6" Sch 40S RHR Piping

INDIAN POINT NUCLEAR POWER PLANT UNIT NO. 3

CALIBRATION BLOCKS

IDENTITY	SIZE/SCHEDULE	IDENTITY OR HEAT NUMBER	MATERIAL	COMPONENT/SYSTEM
INT-25	4" Sch 160 .531"T	01038	A376 TP304 Stainless Steel	4" Sch 160 Pressurizer Relief Piping and Control Rod Drive Mechanisms
INT-26	4"- .687"T	05369	A312 TP304 Stainless Steel	4"-.687"T Pressurizer Spray Safe End
INT-27	31"-1.5"T	3G8217	A515 Grade 70 Carbon Steel	31"-1.5"T Mainsteam Nozzle
INT-28	3" Sch 160 .438"T	N7212	A376 TP316 Stainless Steel	3" Sch 160 Letdown, RTD Return, Pressurizer Relief, Pressurizer Spray and Charging Piping
INT-29	2" Sch 160 .344"T	05324	A376 TP316 Stainless Steel	2" Sch 160 SIS, SIS Hotleg, Letdown, Drain, RTD Hotleg Takeoff, RTD Coldleg Takeoff, SIS Coldleg, Seal Injection and Auxiliary Spray Piping
INT-30	1.5" Sch 160 .281"T	NNN7B	A376 TP316 Stainless Steel	1.5" Sch 160 SIS Coldleg and Seal Injection Piping
INT-31	8.0" T x 28.0" L x 6.0" W	D8366-5	SA533 Class 1 Grade B Carbon Steel	Reactor Vessel Closure Head

INDIAN POINT NUCLEAR POWER PLANT UNIT NO. 3

CALIBRATION BLOCKS

IDENTITY	SIZE/SCHEDULE	IDENTITY OR HEAT NUMBER	MATERIAL	COMPONENT/SYSTEM
INT-32	5.25" T x 18.375" L x 6.0" W	B&W Piece 1	SA508 Class 2 Carbon Steel	Steam Generator Channel Head to Tubesheet
INT-33	3.5"T x 18.2"L x 6.0"W	D8366-5	SA533 Class 1 Grade B Carbon Steel	Steam Generator Secondary Side
INT-34	.750"T x 9.0"L x 4.0"W	30106	SA240 TP304 Stainless Steel	Residual Heat Exchangers 31&32
INT-35	.625"T x 9.0"L x 4.0"W	30106	SA240 TP304 Stainless Steel	Non Regenerative Letdown Heat Exchanger
INT-36	.250"T x 9.0"L x 4.0"W	30106	SA240 TP304 Stainless Steel	Volume Control Tank
INT-37	6.125"T x 5.75" Diameter Stud Segment	P3199	SA540 001-7 Carbon Steel	Reactor Vessel Closure Head Studs
INT-38	4.75"T x 16.625"L x 6.0"W	B-9003-3	SA533 Grade B Class 1 Carbon Steel	Pressurizer
INT-39	14.0"T&L x 36.0"L&T x 6.0"W	6-0472	SA508-77 Class 2 Carbon Steel	Reactor Vessel Flange From Seal Surface, Reactor Vessel Nozzle to Shell and Reactor Vessel Ligaments
INT-40	4" Sch 120 .438"T	M6108	A376 TP 316 Stainless Steel	4" Sch 120 Pressurizer Spray Piping
INT-41	8" Sch 160 .906"T	50465	A106 Grade B Carbon Steel	8" Sch 160 Mainsteam Piping
INT-42	2.6"T x 15.0"L x 6.0"W	803C63380	SA516 Grade 70 Carbon Steel	Accumulator Tanks 31, 32, 33 & 34 and Boron Injection Tank

INDIAN POINT NUCLEAR POWER PLANT UNIT NO. 3

CALIBRATION BLOCKS

IDENTITY	SIZE/SCHEDULE	IDENTITY OR HEAT NUMBER	MATERIAL	COMPONENT/SYSTEM
INT-43	11.0"T x 38.0"L x 6.0"W	C5128-2	SA533 Grade B Class 1 Carbon Steel	Reactor Vessel Flange to Shell From I.D. and Reactor Vessel Shell
INT-44	9.0"T x 40.0"L x 6.0"W	C5128-2	SA533 Grade B Class 1 Carbon Steel	Reactor Vessel Nozzle Inside Radius
INT-45	6.0"T x 21.0"L x 6.0"W	C5128-2	SA533 Grade B Class 1 Carbon Steel	Reactor Vessel Bottom Head
INT-46	2.5"T x 18.5"L x 6.0"W	31-3212; 57128; K57396	A508 Class 2 Carbon Steel; A-351-65-CF8A Forging; TP316 Stainless Steel	Reactor Vessel Nozzle to Safe End and Reactor Coolant Pipe to Spool

NEW YORK POWER AUTHORITY
INDIAN POINT NUCLEAR POWER PLANT
UNIT NO. 3
CALIBRATION BLOCKS

INDIAN POINT UNIT NO. 3 DESIGNATION	:	INT-1
COMPONENT/SYSTEM	:	PRESSURIZER SKIRT
SIZE/SCHEDULE	:	1.5"T x 13.0"L x 4.0"W
MATERIAL	:	SA516 GRADE 70 CARBON STEEL
HEAT OR IDENTITY NUMBER	:	B6272

ASME SECTION V AND XI 1983 EDITION THROUGH SUMMER 1983 ADDENDA REQUIREMENTS:

1. Section V : T-546
2. Material : SA516 Grade 70 Carbon Steel
3. Size/Schedule: 1.5"T x 4.5"L x 6.0"W

WESTINGHOUSE ELECTRIC CORPORATION - NSID - INSPECTION SERVICE DESIGN:

Calibration block was designed to meet intent of ASME Boiler and Pressure Vessel Code Section XI 1974 Edition through Summer 1975 Addenda.

RECOMMENDATION:

Calibration block to meet Section V 1983 Edition through Summer 1983 Addenda would be to design calibration block to requirements of "T-546 Welds in Wrought and Cast Ferritic Product Forms, Excluding Pipe and Figure T-546.1".

NOTES:
1. 4.0" LONG X 0.125" FLAT END MILL NOTCH 10% "T" DEEP
2. DRILL AND REAM TWO HOLES 4.0" LONG AND 0.125" IN DIAMETER

TOLERANCES:
3. NOTCH DEPTH + 0.005" - 0.010"
4. NOTCH WIDTH + 0.25" - 0.00"
5. HOLE LOCATION TO BE BASED ON ACTUAL "T" ± 0.016"
6. SIDE DRILLED HOLE DIAMETER ± 0.03"
7. LENGTH OF BLOCK +2.0"- 0.25"

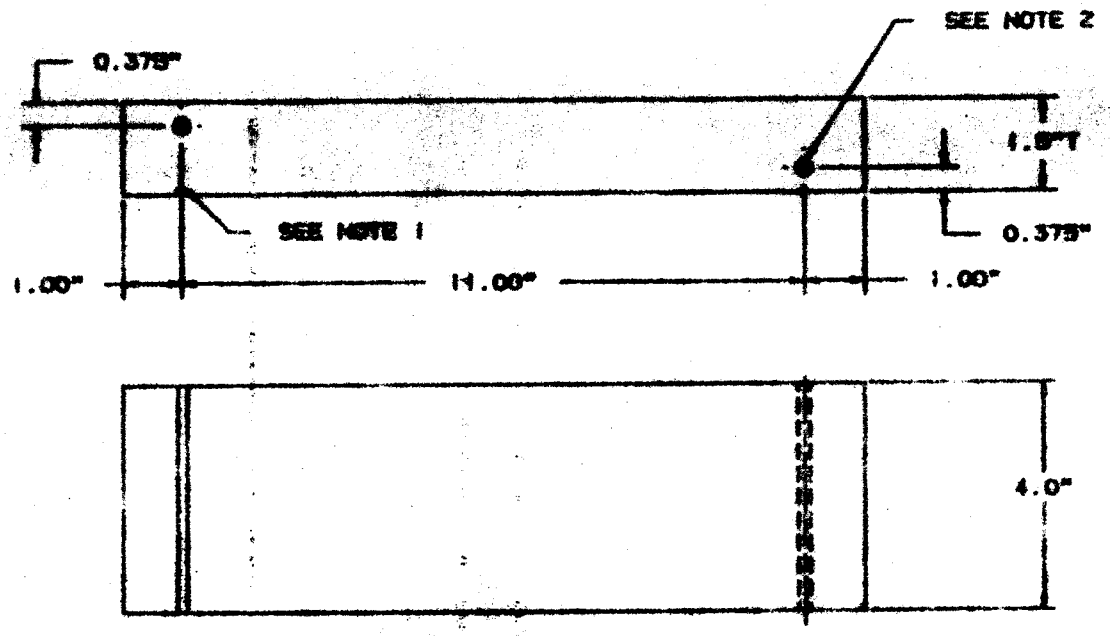

COMPUTER SYSTEM PLANT

Phone: (412) 539-2534

TOOLING SPECIALISTS INC.

P. O. Box 251
LATROBE, PENNSYLVANIA
15650

CONSIGNEE

DATE DEC. 11 19 78

WESTINGHOUSE ELECTRIC CORPORATION
NUCLEAR ENERGY SYSTEMS
P.O. BOX 355
PITTSBURGH, PA. 15230

PURCHASE ORDER NO. 544-XK-287353-[illegible]

	DESCRIPTION
9	8 PCS 14 SCH 405
	1 PC. 1½ x 4 x 13
	DELIVER TO: PHIL BUKES
	COMPLETE

W. O. 20878

RECEIVED THE ABOVE Phillip E Bukes
RECEIVING CLERK

UT CALIBRATION BLOCK RELEASE
FORM ISI-C-01

SUPPLIER			DATE
Tooling Specialists			12/12/78
ESS P.O. Box 251 LaTrobe Pa 15650			
PURCHASE ORDER	ITEM	DRAWING	REV.
287353	1 + 2	W006 Rev 2 W006 Rev 5 (B)	W005 Rev 2 + W006 Rev 5 (B)

BLOCK(S) DESCRIPTION

HEAT NO.	SERIAL NO.(S)	MATERIAL	THICKNESS
F706284 B6272	See Below	SA516GR70 + 304SS A358CL2	1.5" + .375"

FORM (DESCRIPTION, SIZE, USE, ETC.)

1. 8 Pieces 14" Sch 40S A358CL2 TP304SS HT. NO F76023 To Kewaunee Unit #1 (1 piece)

Other 7 Pieces As needed To Different Sites.

2. 1 Piece 1.5"T x 4"W x 13"L SA516GR70 HT. NO B6272 to INDIAN POINT UNIT 3

BLOCKS RELEASED BASED UPON

1 ☐ VISUAL
2 ☐ DIMENSIONAL (SUPPLIER)
3 ☐ DIMENSIONAL (WNSD)
4 ☐ DOCUMENTATION
- 4.1 ☐ TEST REPORT (CHEMICAL)
- 4.2 ☐ TEST REPORT (PHYSICAL)
- 4.3 ☐ HEAT TREATMENT
- 4.4 ☐ WELDING

5 ☐ UT RESPONSE
6 ☐ STATEMENT OF COMPLIANCE

REMARKS

BLOCKS SHIPPED TO	STORED AT	DOCUMENTATION ON FILE AT
N/A	Kewaunee #1, INT #3 + R+D CENTER	R+D Bldg 701 Bay 301

WNSD REPRESENTATIVE	Q.A. REPRESENTATIVE (IF APPLICABLE)

TOOLING
SPECIALISTS
INCORPORATED

MACHINE TOOL BUILDERS — SPECIAL MACHINING — DIES — ENGINEERING SERVICE

P. O. BOX 251, LATROBE, PA. 15650 Phone: (412) 539-2534

December 12, 1978

Westinghouse Electric Corporation
Nuclear Energy Systems
P. O. Box 355
Pittsburgh, Pennsylvania 15230

Attention: Mr. R. D. Sandefer

Westinghouse Purchase Order 544-XK-287353-XN

Subject: Letter of Compliance

Gentlemen:

Please be advised that the product or products shipped to you on the above referenced purchase order have been manufactured to comply with both dimensional and contractual requirements established and agreed upon between buyer and seller.

All Local, State and Federal Government requirements have been complied with on this purchase order.

Thank you.

Sincerely,
TOOLING SPECIALISTS INC.

Thomas D. Shearer
Manager Special Products

TDS*sdp

INSPECTION REPORT

Page _____ of _____

TOOLING SPECIALISTS, INC.
Latrobe, Pa. 15650
Phone: (412) 539-2534

Dwg. # (W) 006 REV. 48
Revision
Item
P. O. # 544-XK-287353-XN
Work Order # 20-878

CUSTOMER:

PART DESCRIPTION: (1) FLAT CALIBRATION BLOCK "B" HT B6272

IF OUT OF TOLERANCE, PLACE X IN BOX TO RIGHT OF DIMENSION.

DRAWING DIMENSIONS	Part No.	X	Part No.	X	Part No.	X	Part No.	X	Part No.	X	Part No.
Slot Width	.132										
Slot depth	.150										
"T" dim.	1.507										
Hole dia.	1/8"										
Length	13"										
Width	4"										
T Hole Loc.	.376	X	1.00								

INSPECTOR:

RECEIVING INSPECTOR:

PROP

WESTINGHOUSE PROPRIET. .IY CLASS 2

WCAP 8731

MECHANICAL AND FRACTURE TOUGHNESS PROPERTIES OF UHI VESSEL BASE METAL AND WELDMENTS

R. C. Little
R. Jucha

May 1976

Approved: J. F. Enrietto, Manager
Materials and Process Engineering

Work Performed Under Shop Order No. DMW-215/CQL-215

This document contains information proprietary to Westinghouse Electric Corporation; it is submitted in confidence and is to be used solely for the purpose for which it is furnished and returned upon request. This document and such information is not to be reproduced, transmitted, disclosed or used otherwise in whole or in part without authorization of Westinghouse Electric Corporation, Nuclear Energy Systems.

WESTINGHOUSE ELECTRIC CORPORATION
Nuclear Energy Systems
P. O. Box 355
Pittsburgh, Pennsylvania 15230

SECTION 3
RESULTS AND DISCUSSION

3-1. BASE METAL PROPERTIES

The chemical check analyses of plate samples from heats B6272 and A1069 are shown in table 3-1 along with the product analysis of SA 516 Grade 70 steel. Table 3-2 shows that the chemical composition of each plate sample meets the requirements of the product analysis.

The results of tension tests using plate-type specimens are presented in table 3-3. Tensile properties in the longitudinal and transverse rolling meet the tensile requirements for SA 516 Grade 70 steel.

Observation of Charpy V-notch-curves, figures 3-1 and 3-3 and table 3-7, show that 20 ft lb temperature is 0°F for the plate material from heat B6272. Thus, this Charpy V-notch test result meets the ASME Code 1971 including Winter of 1971 Addenda, Charpy V-notch requirement of 20 ft lb at 0°F.

The nil-ductility temperature determined by drop-weight tests type P-3 specimens from the plate from heat B6272 is -10°F and is listed in table 3-8.

The reference temperature RT_{NDT} (NC2332) was established as follows:

- T_{NDT} by drop-weight tests is -10°F.
- The lowest temperature at which 50 ft lb and 35 mle is obtained was 70°F.
- Subtracting 60°F from 70°F, the RT_{NDT} is 10°F or 20°F above T_{NDT}.

The LSMT based on the Summer of 1972 Addenda shall not be lower than RT_{NDT} + 100°F or 110°F.

The LSMT based on the Westinghouse positions shall not be lower than RT_{NDT} + 60°F or 70°F.

The LSMT based on the Winter of 1973 Addenda shall not be lower than RT_{NDT} + 30°F or 40°F.

SECTION 2
MATERIALS AND METHODS

Simulated UHI vessel production joints were fabricated and postweld heat treated by Wyatt. The base metal used for the production joints was normalized SA 516 Grade 70 steel plate (5 7/16 inches thick) rolled at Lukens Steel Company. Plate material from two heats (heats B6272 and A1069) was used for the production joints.

Two butt joints were welded at Wyatt. The shielded metal-arc process using E7018 electrodes (F4) and the welding parameters in Wyatt procedure HWA15093, Rev. B, was used for the first joint. Linde 40B wire and Linde 709-5 submerged-arc flux and the welding parameters in Wyatt procedure HWA 15093, Rev. B was used for the second joint. Both joints were postweld heat treated at 1150°F for 8 hours and sent to Tooling Specialists Company, Latrobe, PA, for machining of the required specimens for mechanical testing.

Tension test, Charpy V-notch, and drop-weight specimens were prepared from the normalized and postweld heat treated SA 516 Grade 70 steel base plate. Also, specimens for chemical check analysis and metallographic studies were machined. The location and orientation of the base metal specimens are listed in table 2-1 and are shown in figure 2-1.

Transversely butt-welded tension test specimens, all-weld-metal tension test specimens, guided side-bend test specimens and weld metal and HAZ Charpy V-notch and drop-weight specimens were prepared from each butt joint. Also, weld metal specimens for chemical analysis and metallographic specimens were machined out. The orientation and location of these specimens are shown in figures 2-2 and 2-3 and are listed in table 2-2.

The tension test and guided side-bend test specimens were tested at room temperature. Both the CVN and drop-weight specimens were tested over a range of temperatures to establish the transition temperature curves and nil-ductility temperatures. Photo-micrographs of the base metal, weld metal, and heat-affected zone were made.

42

TABLE 3-1
CHEMICAL COMPOSITION OF SA516 GRADE 70 STEEL BASE METAL INVESTIGATED

Heat No.	ASME Requirements or Results	Type of Analysis	C	Mn	P	S	Si	Cu	Ni	Cr	Mo	Al (total)
	ASTM	Product	0.31 (max)	0.80 to 1.25	0.035 (max)	0.04 (max)	0.13 to 0.33					
B6272	Actual	Check	0.30	1.06	0.022	0.037	0.26	.16	.10	.081	.044	.038
A1069	Actual	Check	0.30	1.10	0.028	0.025	0.27	.09	.10	.11	.091	.023

TABLE 3-3

RESULTS OF TENSION TESTS OF BASE METAL*

Heat No.	Type of Specimen	ASTM Requirements or Results	Yield Point KSI	Tensile Strength KSI	Elongation in 8 in. %	Elongation in 2 in. %	Reduction in Area %
		ASTM	38.0	70.0 to 85.0	17 (min.)	21 (min.)	
B6272	Longitudinal	Results	47.5	78.5	30.1	60.5	61.7
B6272	Transverse	Results	48.0	78.5	26.7	48.0	42.8

44

TABLE 3-7
SUMMARY OF CHARPY V-NOTCH TRANSITION TEMPERATURES

Process	Heat No.	Specimen Location	Type of Specimen	20 ft lb, °F	20 mle °F	50% Shear, °F	50 ft lb	35 mle
—	B6272	Base Metal	Longitudinal	0	10	40	76	50
—	B6272	Base Metal	Transverse	40	30	55	—	—
Shielded Metal Arc	B6272	Heat-Affected Zone	—	-70	-60	-10	-36	-36
Submerged Arc Weld	A1069	Heat-Affected Zone	—	Below -100	Below -100	-70	Below -100	Below -100
Shielded Metal Arc	B6272	Weld Metal	—	-50	-40	0	-20	-20
Submerged Arc Weld	A1069	Weld Metal	—	Below -100	Below -100	-40	Below -100	Below -100

NEW YORK POWER AUTHORITY
INDIAN POINT NUCLEAR POWER PLANT
UNIT NO. 3
CALIBRATION BLOCKS

INDIAN POINT UNIT NO. 3 DESIGNATION	:	INT-2
COMPONENT/SYSTEM	:	REACTOR COOLANT PIPE (AXIAL)
SIZE/SCHEDULE	:	2.625"T x 8.969"L x 3.969"W
MATERIAL	:	A376 TP316 STAINLESS STEEL
HEAT OR IDENTITY NUMBER	:	D8770

ASME SECTION V AND XI 1983 EDITION THROUGH SUMMER 1983 ADDENDA REQUIREMENTS:

1. Section V : T-110 and T-548
2. Section XI : Article III-1100, Supplement 7 and IMA-2250
3. Material : A376 TP316 Stainless Steel and A351 GR.CF8M (31"I.D. 90° Elbows)
4. Size/Schedule: 31" I.D.: 2.495"T Min.; 29" I.D.: 2.335"T Min.; 27.5" I.D.: 2.215"T Min.

WESTINGHOUSE ELECTRIC CORPORATION - NSID - INSPECTION SERVICE DESIGN:

Calibration block was designed to meet intent of ASME Boiler and Pressure Vessel Code Section XI 1970 Edition, and has been used for Preservice and all Inservice Examinations of the three different sizes of Reactor Coolant Pipe.

RECOMMENDATION:

Calibration block design follows the guidelines of Section V and Section XI 1983 Edition through Summer 1983 Addenda for Austenitic Piping. Although P-number groupings are equivalent with A376 TP316 Stainless Steel another calibration block could be manufactured from A351 Grade CF8M material for examinations of the 31" ID Reactor Coolant Pipe 90° Elbows.

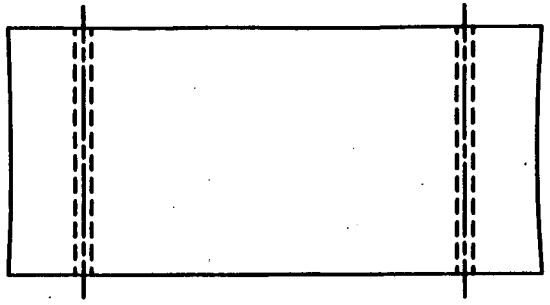

TOP VIEW

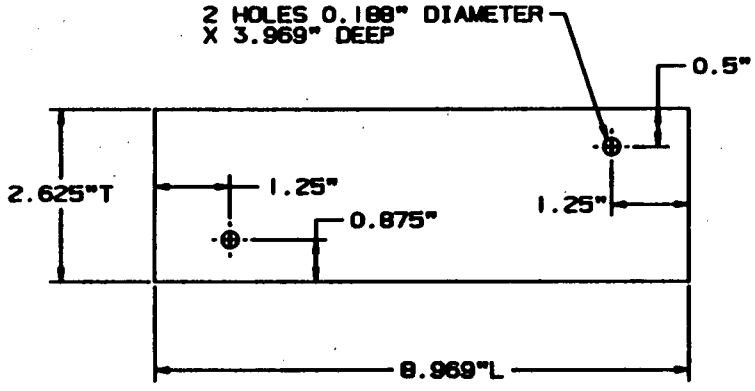

FRONT VIEW

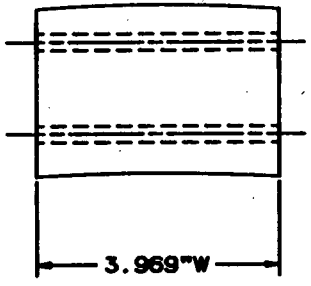

SIDE VIEW

COMPUTER SYSTEM PLANT MODELING

NSSD TECHNICAL APPROVAL Phillip C. Bukas	11-20-86	Westinghouse Electric Corporation PLANT ENGINEERING DIVISION - PITTSBURGH, PA
LEVEL III REVIEW David Kunkel	11-20-86	TITLE CALIBRATION BLOCK INT-2 REACTOR COOLANT PIPE (AXIAL) 2.625"T X 8.969"L X 3.969"W A376 TP316 STAINLESS STEEL HEAT NO.: D8770
ENG		
ENG		
MFR		SIZE C DR. NO. REV.

REVISION

IT.

10958

CORRECTED REPORT

RECEIVED

Cameron IRON WORKS, INC.

P. O. BOX 1212 HOUSTON, TEXAS 77001

PLANT NATIONAL VALVE & MFG. CO
13 NOV 1967
~~STD. BLOCK NAME~~ KC Pipe
NSD S/N HT # D 8770
MATERIAL SS 316
LOT NO. 1
PAGE 1 of 2

CERTIFICATE OF TESTS

SOLD TO: WESTINGHOUSE ELECTRIC CORP.
Atomic Power Division
P. O. Box 355
Pittsburgh, Pennsylvania 15230
Attn: T.E. Cooper, Account.

SHIP TO:

Customer Order No.	C.I.W. Sales Order No.	Specification
54-G-55171-B	F-9630-4	West. G-676341 & A-376 TP 316, E-2 & S-0

Description of Material

ITEM #7
29.075" I.D. (+1/8, -1/8) X 2.335" M.W. Ref: 34" O.D.

C.I.W. Part Number	Heat No.	C	MN	P	S	SI	CR	NI	MO	Co	V	CU
		CHEMICAL ANALYSIS										
86-3400-2908-54	D 8767	.07	1.76	.007	.008	.26	13.15			.08		.10
	D 8770	.07	1.76	.016	.010	.28	13.00			.08		.12
	D 8771	.07	1.74	.008	.009	.20	13.50			.07		.11

	CR	MO
D 8767	17.19	2.31
D 8770	17.25	2.32
D 8771	16.95	2.29

C.I.W. Part No. or Size	Quantity	Heat No.	.2% Offset Yield PSI	Tensile PSI	% Elong In.	% Red. Area	Charpy Impact	Hardness
		MECHANICAL PROPERTIES						
86-3400-2908-54	2	D 8767	See attachment for mechanical properties for forging.					
	2	D 8770						
	2	D 8771						

Elevated Temperature Tensile Properties at 650°F.:

Test Ser.# 1809	D 8767	24,400	62,200	42.0	69.3
" 1811	D 8770	20,900	62,000	45.0	68.3
" 1807	D 8771	23,400	64,400	45.0	69.9

Pipe will have min. yield of 120% of the allowable stress at 650°F., 120% of 17,850 is 20,460 psi min. yield strength with .2% offset at 650°F.

Chem. Heat No. Jominy Hardenability Grain Size

Dye penetrant inspect per ASME Sec. VIII Append. 8 Code Case N-10.
Heat Treat Annealed.
1900°F., hold 1 hr. at temp. Water quench.
Flattening Tests: Satisfactory
Pipe ultrasonically inspected and found acceptable.

Subscribed and Sworn to before me this 19 day of May 1967

Notary Public
G. A. TOUCHTON

I certify these tests to be correct as contained in the records of the company.

H. O. TRIGG, Metallurgist

CORRECTED REPORT

CAMERON IRON WORKS, INC.
Houston, Texas

CERTIFICATE OF TESTS

WESTINGHOUSE ELECTRIC CORP.
Atomic Power Division
P. O. Box 355
Pittsburgh, Pennsylvania 15230
Attn: T. E. Cooper, Account.

13 May 1967

Customer Order No.	CIW Sales Order No.	Specification
54-G-55171-B	F-8639-4	West. G-676341 & A376 TP 316, S-2 & S-6

Description Of Material: Item #7 20.075" I.D. (+1/8, -1/8) X 2.325" M.W. Ref: 34" O.D.

Mechanical Properties:

Forging Ser.No.	CIW Ht.Code	.2% Offset Y.S. psi	Ult. T.S. psi	Elong. %	R.A. %	Length	Weight
1807	D 8771	35,000 36,500	79,600 79,300	56.5 57.0	72.7 71.9	6'8-13/16"	5,850#
1808	D 8771	36,200 35,800	80,900 79,400	58.0 56.5	72.5 73.0	6'8-13/16"	5,975
1809	D 8767	37,700 35,000	80,300 79,200	54.0 56.0	73.5 72.3	6'8-5/8"	5,900
*1810	D 8767	37,000 33,000	78,000 76,400	63.0 56.5	77.7 71.8	6'8-1/4"	5,775
*1811	D 8770	32,000 36,000	75,800 79,400	57.5 55.5	72.9 71.0	6'8-9/16"	5,800
1812	D 8770	34,000 35,000	76,300 77,900	59.5 57.5	67.4 71.4	6'8-3/4"	5,925

* repeated on ~~later~~ report dated 16 June 1967

PLANT

STD. BLOCK NAME RC PIPE

NSD S/N Lot # D8770

MATERIAL SS 316

LOT NO. 1

PAGE 2 of 2

NEW YORK POWER AUTHORITY
INDIAN POINT NUCLEAR POWER PLANT
UNIT NO. 3
CALIBRATION BLOCKS

INDIAN POINT UNIT NO. 3 DESIGNATION	:	INT-3
COMPONENT/SYSTEM	:	REACTOR COOLANT PIPE (CIRCUMFERENTIAL)
SIZE/SCHEDULE	:	2.813"T x 8.969"L x 3.969"W
MATERIAL	:	A376 TP316 STAINLESS STEEL
HEAT OR IDENTITY NUMBER	:	D8770

ASME SECTION V AND XI 1983 EDITION THROUGH SUMMER 1983 ADDENDA REQUIREMENTS:

1. Section V : T-110 and T-548
2. Section XI : Article III-1100, Supplement 7 and IMA-2250
3. Material : A376 TP316 Stainless Steel and A351 GR.CF8M (31"I.D. 90° Elbows)
4. Size/Schedule: 31" I.D.: 2.495"T Min.; 29" I.D.: 2.355"T Min.; 27.5" I.D.: 2.215"T Min.

WESTINGHOUSE ELECTRIC CORPORATION - NSID - INSPECTION SERVICE DESIGN:

Calibration block was designed to meet intent of ASME Boiler and Pressure Vessel Code Section XI 1970 Edition and has been used for Preservice and when required, for all Inservice Examinations of the three different sizes of Reactor Coolant Pipe.

RECOMMENDATION:

Calibration block design follows the guidelines of Section V and Section XI 1983 Edition through Summer 1983 Addenda for Austenitic Piping. Although P-number groupings are equivalent with A376 TP316 Stainless Steel another calibration block could be manufactured from A351 Grade CF8M material for examination of the 31"I.D. Reactor Coolant Pipe 90° Elbows.

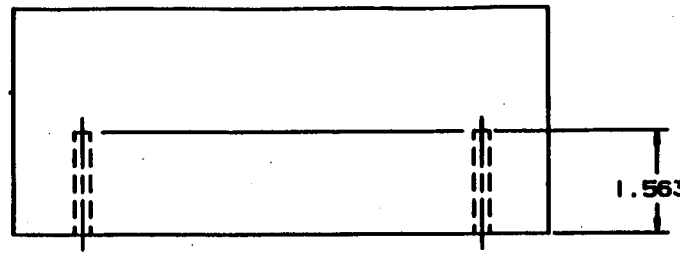

TOP VIEW

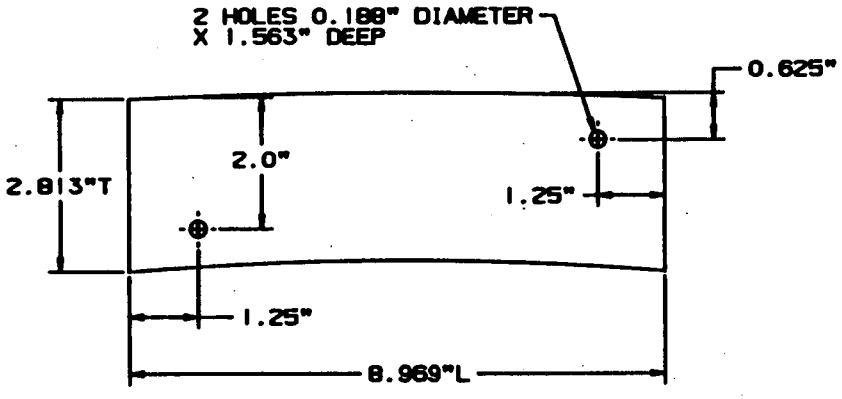

FRONT VIEW

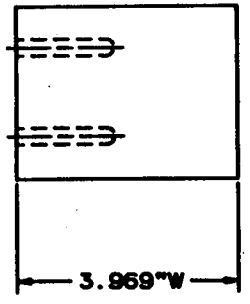

SIDE VIEW

COMPUTER SYSTEM PLANT MODELING

REVISION	HEED TECHNICAL APPROVAL Philip C. Bukea	11-30-86
	LEVEL III REVIEW David Kunz	11-30-86
	ENG	
	ENG	
	MGR	

Westinghouse Electric Corporation
PLANT ENGINEERING DIVISION - PITTSBURGH, PA

TITLE
CALIBRATION BLOCK INT-3
REACTOR COOLANT PIPE (CIRCUMFERENTIAL)
2.813"T X 8.969"L X 3.969"W
A376 TP316 STAINLESS STEEL
HEAT NO.: D8770

SIZE C | DR. NO. | REV.

10958

CORRECTED REPORT

RECEIVED

Cameron IRON WORKS, INC.

P. O. BOX 1212 HOUSTON, TEXAS 77001

PLANT NATIONAL VALVE & FITG. CO

STD. BLOCK NAME KC Pipe

NSD S/N HT # D 8770

MATERIAL SS 316

LOT NO. 1

PAGE 1 of 2

CERTIFICATE OF TESTS

SOLD TO: WESTINGHOUSE ELECTRIC CORP.
Atomic Power Division
P. O. Box 355
Pittsburgh, Pennsylvania 15230
Attn: T.E. Cooper, Account.

SHIP TO:

Customer Order No.	C.I.W. Sales Order No.	Specification
54-G-55171-B	F-9690-4	West. G-676341 & A-376 TP 316, G-2 & G-6

Description of Material

ITEM #7
29.075" I.D. (+1/8, -1/8) X 2.335" M.W. Ref: 34" O.D.

C.I.W. Part Number	Heat No.	C	MN	P	S	SI	CR	NI	MO	Co	V	CU
		CHEMICAL ANALYSIS										
86-3400-2908-54	D 8767	.07	1.76	.007	.008	.26	12.15			.08		.10
	D 8770	.07	1.76	.016	.010	.28	13.00			.08		.12
	D 8771	.07	1.74	.008	.009	.20	13.50			.07		.11

	CR	MO
D 8767	17.19	2.31
D 8770	17.25	2.32
D 8771	16.55	2.29

C.I.W. Part No. or Size	Quantity	Heat No.	.2% Offset Yield PSI	Tensile PSI	% Elong In.	% Red. Area	Charpy Impact	Hardness
			MECHANICAL PROPERTIES					
86-3400-2908-54	2	D 8767	See attachment for mechanical properties per forging.					
	2	D 8770						
	2	D 8771						

Elevated Temperature Tensile Properties at 650°F.:

Test Ser.# 1809	D 8767	24,400	62,200	42.0	69.9
" 1811	D 8770	20,900	62,000	45.0	68.3
" 1807	D 8771	23,400	64,400	40.0	69.0

Pipe will have min. yield of 120% of the allowable stress at 650°F., 120% of 17,850 is 20,460 psi min. Yield strength with .2% offset at 650°F.

Grain Size

Dye penetrant inspect per ASME Sec. VIII Append. 8 Code Case N-10.
Heat Treat Annealed.
1900°F., hold 1 hr. at temp. Water quench.
Flattening Tests: Satisfactory
Pipe ultrasonically inspected and found acceptable.

Subscribed and Sworn to before me this 19 day of May 1967

Notary Public
G. A. TOWNSEND

I certify these tests to be correct as contained in the records of the company.

H. O. TRIGG, Metallurgist

51

CORRECTED REPORT

CAMERON IRON WORKS, INC.
Houston, Texas

CERTIFICATE OF TESTS

WESTINGHOUSE ELECTRIC CORP.
Atomic Power Division
P. O. Box 355
Pittsburgh, Pennsylvania 15230
Attn: T. E. Cooper, Account.

13 May 1967

Customer Order No.	CIW Sales Order No.	Specification
54-G-55171-B	F-8639-4	West. G-676341 & A376 TP 316, S-2 & S-6

Description Of Material: Item #7 29.075" I.D. (+1/8, -1/8) X 2.335" M.W. Ref: 34" O.D.

Mechanical Properties:

Forging Ser.No.	CIW Ht.Code	.2% Offset Y.S. psi	Ult. T.S. psi	Elong. %	R.A. %	Length	Weight
1807	D 8771	35,000 36,500	79,600 79,300	56.5 57.0	72.7 71.9	6'8-13/16"	5,050#
1808	D 8771	36,200 35,600	80,900 79,400	58.0 56.5	72.5 72.0	6'8-13/16"	5,075
1809	D 8767	37,700 35,000	80,300 79,200	54.0 56.0	73.5 72.3	6'8-5/8"	5,900
*1810	D 8767	37,000 33,000	78,000 76,400	63.0 56.5	77.7 71.8	6'8-1/4"	5,775
*1811	D 8770	32,000 30,000	75,800 79,400	57.5 55.5	72.9 71.0	6'8-9/16"	5,800
1812	D 8770	34,000 35,000	76,300 77,900	59.5 57.5	67.4 71.4	6'8-3/4"	5,925

* repeated on ~~later~~ report dated 16 June 1967

PLANT

STD. BLOCK NAME RC PIPE

NSD S/N D8770

MATERIAL SS 316

LOT NO. 1

PAGE 2 of 2

NEW YORK POWER AUTHORITY
INDIAN POINT NUCLEAR POWER PLANT
UNIT NO. 3
CALIBRATION BLOCKS

INDIAN POINT UNIT NO. 3 DESIGNATION	:	INT-4
COMPONENT/SYSTEM	:	28" MAINSTEAM PIPING
SIZE/SCHEDULE	:	28" - .858"T
MATERIAL	:	A516 GRADE 70 CARBON STEEL
HEAT OR IDENTITY NUMBER	:	802E03230

ASME SECTION V AND XI 1983 EDITION THROUGH SUMMER 1983 ADDENDA REQUIREMENTS:

1. Section V : T-547
2. Section XI : III-3400
3. Material : A155 KC 70 Class 1 Carbon Steel
4. Size/Schedule: 28" - 1.04"T

WESTINGHOUSE ELECTRIC CORPORATION - NSID - INSPECTION SERVICE DESIGN:

Calibration block was designed to meet intent of ASME Boiler and Pressure Vessel Code Section XI 1974 Edition through Summer 1975 Addenda.

RECOMMENDATION:

Calibration block to meet the requirements of ASME Boiler and Pressure Vessel Code Section V and XI 1983 Edition through Summer 1983 Addenda would require a new block with diameter of 28" and a thickness of 1.04" designed to Figure T-547.1. P-Number Groupings for Materials A516 Grade 70 Carbon Steel and A155 KC 70 Class 1 Carbon Steel are equivalent.

NOTES:

1. WHEN MEASURED FROM EITHER SIDE OF CENTERLINE MINIMUM LENGTH AT BOTTOM OF AXIAL NOTCHES TO BE 0.5" AS SHOWN IN SIDE VIEW.
2. NOTCH DEPTH 10% OF MEASURED THICKNESS +0.005"-0.010".
3. PREP ALLOWED IN AREA OF SIDE DRILLED HOLE SHALL NOT INFRINGE ON HOLE SIZE REQUIREMENTS.
4. CIRCUMFERENTIAL HOLES AND NOTCHES TO BE PLUS OR MINUS 0.1" FROM ENDS.
5. LOCATE AXIAL NOTCHES SO AS NOT TO IMPOSE ON END OF HOLES OR ON END OF NOTCHES AT CENTERLINE.
6. FLAT SIDE OF NOTCHES TO BE PERPENDICULAR NOTCHED SURFACES, WITHIN 2°.
7. HOLE LOCATION TO BE BASED ON ACTUAL "T".
8. SIDE DRILLED HOLE DIAMETER TOLERANCE TO BE WITHIN ±0.03"
9. DRILL HOLES PERPENDICULAR TO RADIUS.
10. ARC DIMENSION +360° AND -0.080".
11. LENGTH TOLERANCE TO BE +2.00"-0.25"

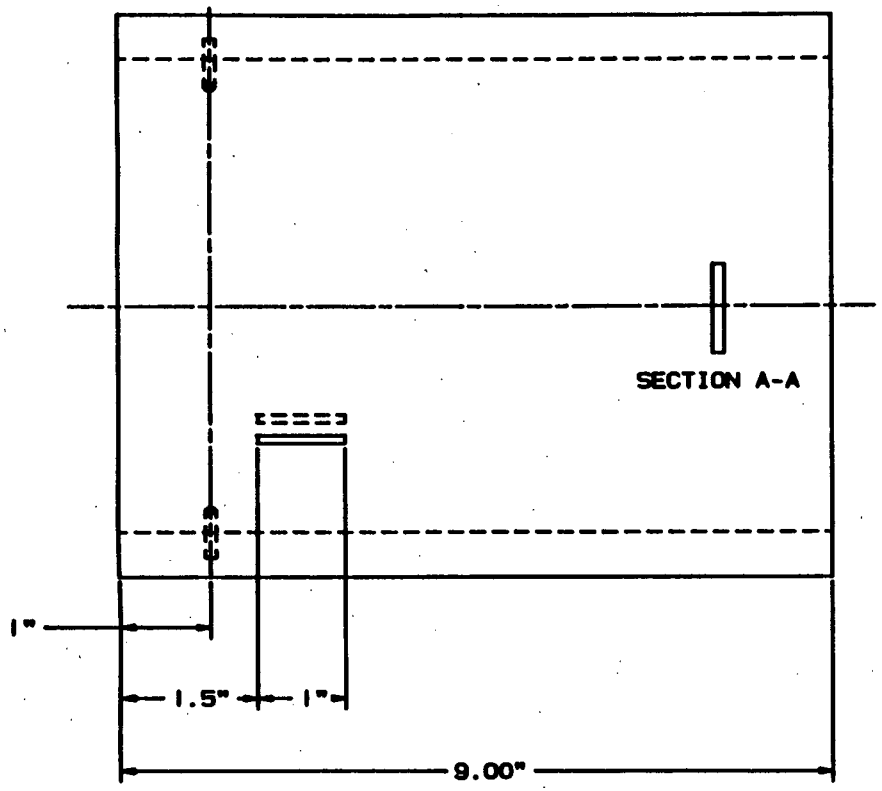

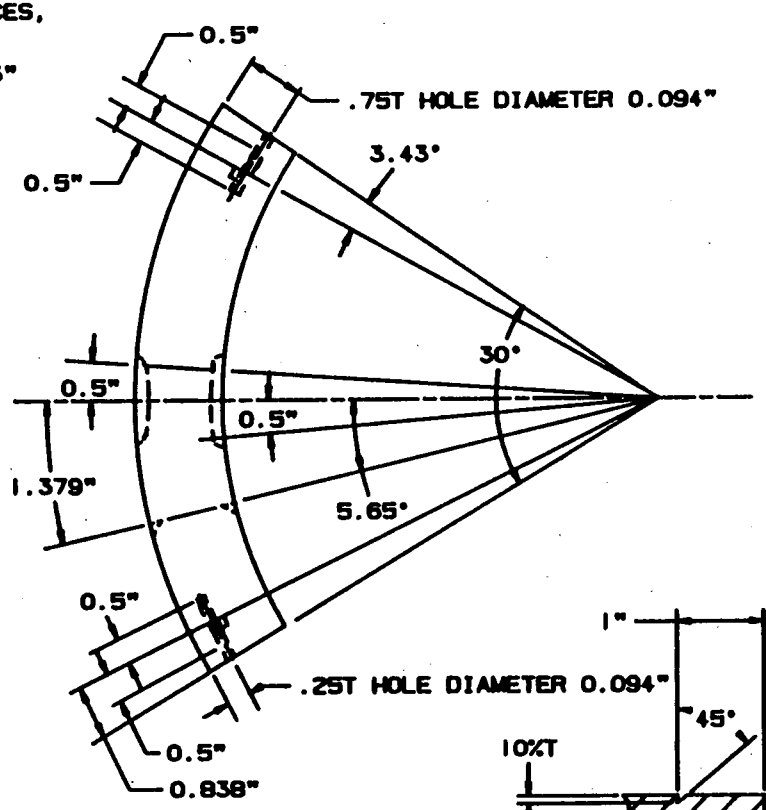

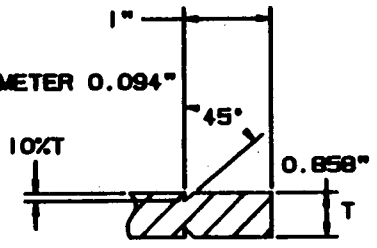

SECTION A-A

COMPUTER SYSTEM PLANT MODELING

NSSD TECHNICAL APPROVAL Phillip C. Burke	11-20-86	Westinghouse Electric Corporation PLANT ENGINEERING DIVISION - PITTSBURGH, PA
LEVEL III REVIEW David Kunz	11-20-86	TITLE CALIBRATION BLOCK INT-4 28" MAINSTEAM PIPING 28" - .858"T-A A516 GRADE 70 CARBON STEEL HEAT NO.: 802E03230
ENG		
ENG		
MGR		SIZE C SK. NO. REV.

REVISION

Phone: (412) 539-2534

TOOLING SPECIALISTS INC.

P. O. Box 251
LATROBE, PENNSYLVANIA
15650

266536

CONSIGNEE

DATE DEC. 17 19 78

WESTINGHOUSE ELECTRIC CORPORATION
NUCLEAR ENERGY SYSTEMS
PITTSBURGH, PA. 15230

PURCHASE ORDER NO. 544-YG-266536-XN

NO. PIECES		CALIBRATION BLOCKS: DESCRIPTION
3	EA.	28" .858"T A155KCF-70 C.S. HEAT NO. 802103230 PER W 003 REV. 1
2	EA.	3" SCH. 160 A376TP304SS HEAT NO. 453853 PER W 004 REV. 1
4	EA.	8" SCH. 80 A106 GRADE B CS HEAT NO. 139624 PER W 004 REV. 1
4	EA.	6" SCH. 40 A312 TP 304 SS HEAT NO. M9950 PER W 005 REV. 2
1	EA.	2" SCH. 160 A312 TP304 SS HEAT NO. 08754 PER W 005 REV. 2
1	EA.	6" SCH. 80 A106 GRB CS HEAT NO. 240393 PER W 004 REV. 1

W. O. 20481

RECEIVED THE ABOVE [signature]
RECEIVING CLERK

TOOLING
SPECIALISTS
INCORPORATED

MACHINE TOOL BUILDERS — SPECIAL MACHINING — DIES — ENGINEERING SERVICE

P. O. BOX 251, LATROBE, PA. 15650 Phone: (412) 539-2534

February 16, 1978

LETTER OF COMPLIANCE

Westinghouse Electric Corporation
Nuclear Energy Systems
P. O. Box 355
Pittsburgh, Pa. 15230

Attention: Mr. E. M. Gamble, Buyer

Reference: P. O. No. 544-XG-266536-XN

Gentlemen:

We hereby certify that Calibration Standard, as supplied, meet the Dimensional Requirements on above order.

Two (2) Copies of DSF Form 54956D attached.

Sincerely,

Tooling Specialists Inc.

Thomas D. Shearer/Susie

Thomas D. Shearer

TDS*eww
ENCLS.

INSPECTION REPORT

Page 6 of 6

TOOLING SPECIALISTS, INC.
Latrobe, Pa. 15650
Phone: (412) 539-2534

Dwg. #

Revision

Item

P. O. #

Work Order # 20481

CUSTOMER:

PART DESCRIPTION:

28" .858 T A155 KCF-70 CS HEAT# 802E3230 W003-1

IF OUT OF TOLERANCE, PLACE X IN BOX TO RIGHT OF DIMENSION.

DRAWING DIMENSIONS	Part No. A	X	Part No. B	X	Part No. C	X	Part No.	X	Part No.	X	Part No.	X
(A)	.945		.930		.948							
(B)	.945		.940		.943							
(C)	.095		.093		.094							
(D)	.095		.094		.094							
(E)	30°		30°		30°							
(F)	10.000		10.000		10.000							
(G)	.093		.093		.093							
1/4 T	.270		.270		.270							
3/4 T	.810		.810		.810							
F	2°3'		2°3'		2°3'							
I.D. B	.780		.780		.780							
O.D.	.838		.838		.838							
F	2°11'		2°11'		2°11'							
B	5°39'		5°39'		5°39'							

INSPECTOR:

RECEIVING INSPECTOR:

W.D.S. 10

NOM. PIPE SIZE"	SCHED ULE	NOM. WALL 'T'"	O.D."	HOLE DIAM ETER"	HOLES 1/4T	1/2T	3/4T	NOTCHES CIRC. O.D.	CIRC. I.D.	AXIAL O.D.	AXIAL I.D.	Length"	NOM. ARC A°	B°	B" (O.D.)	C°	C" (O.D.)	E°	E"& F"	F°
28	--	.858	28	3/32	1	-	1	X	X	X	X	9	30	5.65	1.379	3.43	.838	2.05	.5	2.2

NOTE: Original dimensional requirements supplied to manufacturer.

General Data

1. E and F Dimension - minimum at bottom of notches (.500").
2. D Dimension - Typical all notches (10% of measured thickness) +.500" -.010".
3. A Dimension + to 360° and -.080" of arc.
4. Length +2" -.25".
5. Holes optional for T less than .8".
6. Flat blocks .8"T or less may contain 1/2T hole only.
7. Final acceptable dimensions to be based on intent.
8. Hole location to be based on actual "T".
9. Flat side of notches to be perpendicular notched surfaces, within 2°.
10. Side drilled holes to be within ± 1/32" tolerance.

Intent

1. C Dimension to be approximately 3/4" from edge of arc segment.
2. E and F dimension applicable to both sides of centerline so as to provide 1" long (at bottom) notches.
3. B Dimension to locate axial notches so as not to impose on end of hole at C location or on end of notches at centerline.
4. Circumferential reflectors to be positioned to allow 2T (Full Vee) calibration at 45° beam angle (not applicable for 1 1/2" Sch 80, 1 1/2" Sch 160, 2" Sch 80, 2" Sch 160, 3" Sch 40 & 3" Sch 80).
5. Circumferential holes and notches to be plus or minus .1" from ends.

LADISH CO.
Material Analysis Report
METALLURGICAL DEPARTMENT

PURCHASER: Hulco, Inc.

PURCHASER'S ORDER NO.: 353-7402

ADDRESS: P.O. Box 691 - Pasco, Wash. 99301

CUDAHY, WIS., August 8, 19 72

LSO NO.: C36710H

INVOICE NO.: N 59111

NO. PCS.	DESCRIPTION AND SPECIFICATION	HEAT NO. AND CODE	CHEMICAL COMPOSITION C	Mn	P	S	Si	Ni	Cr	Mo	PHYSICAL PROPERTIES YIELD STRENGTH KSI	ULTIMATE STRENGTH KSI	ELONG. %	RED. OF AREA
	Item 1			LADLE ANALYSIS					Cu		MILL	TESTING		
8	28" x .858 W/W Pipe	80280323 DRAM.	.20	1.10	.012	.021	.25				45.7	74.0	20.0	
				CHECK ANALYSIS							(L) CE	TER WELD	TENSILE	
	ASTM A155 KCF-70 Class 1 and USA Std. B31.7 Class II		.22	1.06	.012	.019	.23					71.0		
				WELD WIRE ANALYSIS										
		40B258	.13	1.77	.010	.023	.05		.14	.55				
	Weld No. Length		VEE notch Charpy impacts at 0°F. (10 x 10 x 0)											
	Mark 1 11" 6-7/16"		Parent Metal:			38.0 - 38.0 - 28.0 ft. lbs.								
	U8-1 11" 6-1/2"					50% - 45% - 45% Shear								
						.030 - .036 - .026 Lateral expansion								
	Weld No. U4-1 - Mark 1-1		Center Weld:			53.0 - 47.5 - 47.5 ft. lbs.								
	Weld No. U8-1 - Mark P-1					45% - 45% - 45% Shear								
						.035 - .049 - .049 Lateral expansion								
			Heat Affected Zone:			22.0 - 20.0 - 22.5 ft. lbs.								
						35% - 45% - 45% Shear								
						.029 - .028 - .029 Lateral expansion								

SUBSCRIBED AND SWORN TO BEFORE ME THIS 8th DAY OF August 19 72

Lorraine Rosai

NOTARY PUBLIC

MY COMMISSION EXPIRES August 27, 1972

I HEREBY CERTIFY THAT TO THE BEST OF MY KNOWLEDGE AND BELIEF THE ABOVE REPORT IS TRUE AND CORRECT.

LADISH CO.
Material Analysis Report
METALLURGICAL DEPARTMENT

PURCHASER Enico, Inc.

CUDAHY, WIS., August 8, 19 72

PURCHASER'S ORDER NO. 353-7402

LSO NO. C367101

ADDRESS P.O. Box 691 - Pasco, Wash. 99301

INVOICE NO. N 59111

NO. PCS.	DESCRIPTION AND SPECIFICATION	HEAT NO. AND CODE	CHEMICAL COMPOSITION								PHYSICAL PROPERTIES			
			C	MN	P	S	SI	NI	CR	MO	YIELD STRENGTH KSI	ULTIMATE STRENGTH KSI	ELONG. %	RED. OF AREA
			Manufactured from ASTM A516 Grade 70 plate.											
			Guided weld bend tests - satisfactory.											
			Welding was performed in accordance with (I Procedure 16[illegible]-10[illegible]											
			Pipe was hydrostatically tested at 1767 psi - satisfactory.											
			Bevel ends were magnetic particle inspected per Procedure 9-Q-305 Rev. 3 and Acceptance Standards of [illegible]-Q-110 - satisfactory.											
			Weld was radiographically inspected per Procedure 9-Q-214 Rev. 2 - satisfactory.											
			Pipe was heat treated per Procedure 13-H-61 Rev. #[illegible]. Normalized 1600°F. Temper 1150°F.											
			Furnace charts attached.											

SUBSCRIBED AND SWORN TO BEFORE ME THIS 8th DAY OF August 19 72

Lorraine Gaier

NOTARY PUBLIC

MY COMMISSION EXPIRES August 27, 1972

I HEREBY CERTIFY THAT TO THE BEST OF MY KNOWLEDGE AND BELIEF THE ABOVE REPORT IS TRUE AND CORRECT.

FITTINGS INSPECTION CHECK SHEET

CUSTOMER: Huico Inc.		PART DESCRIPTION: 28 x .858 M/W R/W PIPE	
DRAWING NO.: 65-05109	TYPE OF STEEL (SPEC.): A-516 GR-70		LJO OR MO: 62-05109
LSO: C36710	MACHINE NO.:		SHIFT: 1 / DATE: 7/28/72
INSPECTOR'S I.D. NO.: 13777	NO. OF PIECES TO BE CHECKED:	NO. OF CHECKS PER 8 HR. SHIFT:	QTY. ON ORDER:

DIMENSIONS AND TOLERANCES SHALL BE ENTERED ON FORM TAKEN FROM PRINT FOR JOB WHICH IS TO BE CHECKED. PATROL INSPECTORS SHALL CHECK AND RECORD DIMENSIONS ON ALL JOBS IN PROCESS. ALL OUT OF TOLERANCE DIMENSIONS SHALL BE CIRCLED IN RED. DEVIATED OR SCRAP MATERIAL SHALL BE BROUGHT TO THE ATTENTION OF THE INSPECTION SUPERVISOR FOR AN ON THE SPOT DECISION.

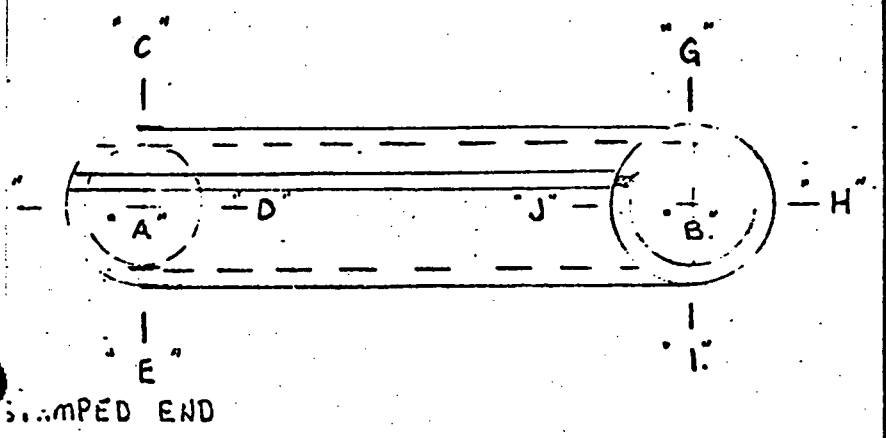

REMARKS

STAMP "A" LOCATION

	ANG.	SQ.	C	D	E	F	G	H	I	J	CODE & SERIAL	TIME CHECKED
PRINT DIM.	.858	.858	.858	.858	.858	.858	.858	.858				
ACTUAL	.876	.880	.868	.896	.870	.838	.894	.871			U4-1 DR4ML	
ACTUAL	.928	.898	.905	.898	.885	.900	.888	.902			T95-1 DR4MK	
ACTUAL	.928	.948	.938	.893	.864	.906	.933	.925			U1-1 DR4MK	
ACTUAL												
ACTUAL												
ACTUAL												
ACTUAL												
ACTUAL												
ACTUAL												
CTUAL												
ACTUAL												

LCO 3024

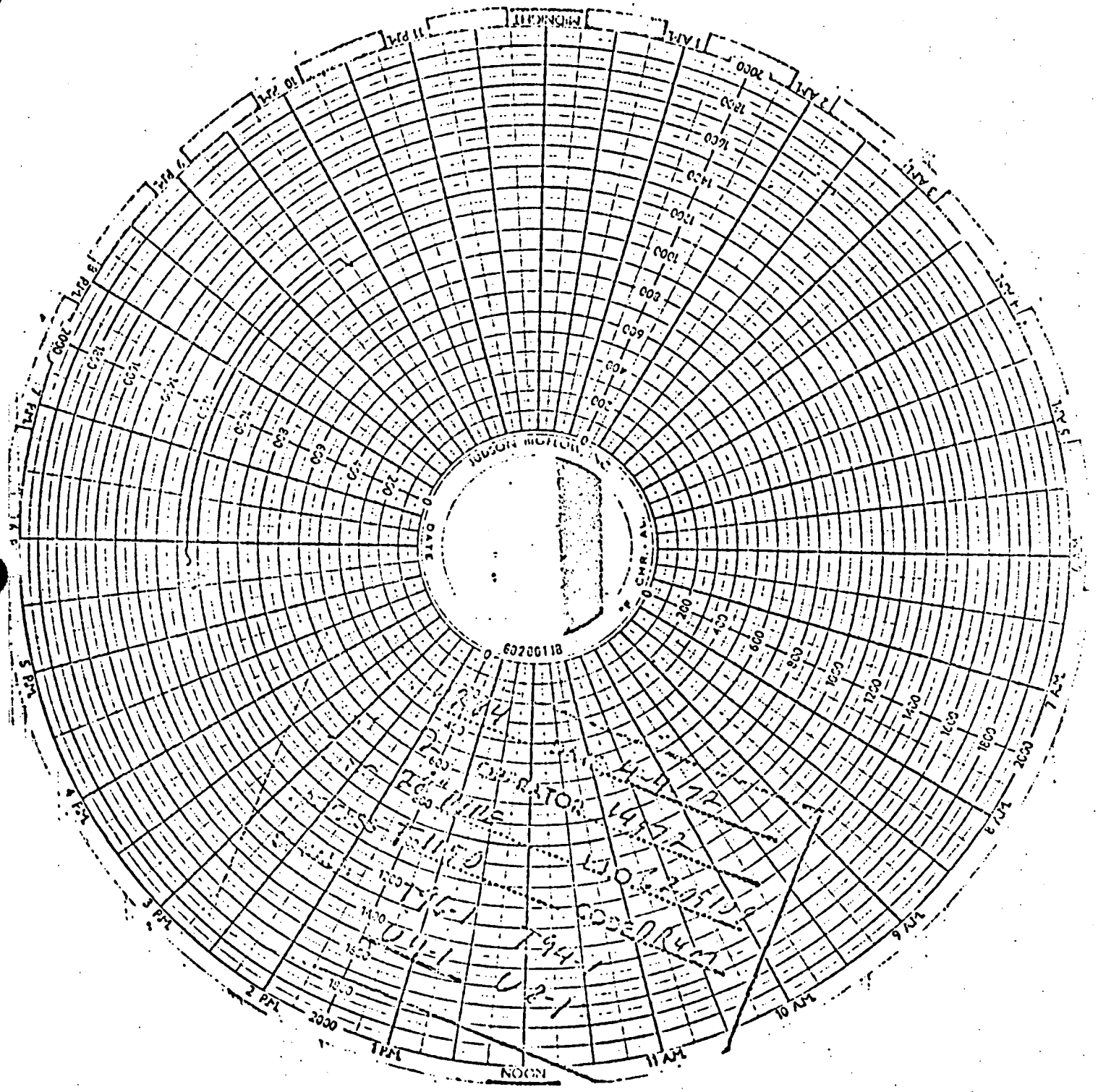

63

NEW YORK POWER AUTHORITY
INDIAN POINT NUCLEAR POWER PLANT
UNIT NO. 3
CALIBRATION BLOCKS

INDIAN POINT UNIT NO. 3 DESIGNATION	:	INT-5
COMPONENT/SYSTEM	:	18" SCH 80 FEEDWATER PIPING
SIZE/SCHEDULE	:	18" SCH 80 .938"T
MATERIAL	:	A106 GRADE B CARBON STEEL
HEAT OR IDENTITY NUMBER	:	L64609

ASME SECTION V AND XI 1983 EDITION THROUGH SUMMER 1983 ADDENDA REQUIREMENTS:

1. Section V : T-547
2. Section XI : III-3400
3. Material : A106 Grade C Carbon Steel
4. Size/Schedule: 18" SCH 80 .938"T

WESTINGHOUSE ELECTRIC CORPORATION - NSID - INSPECTION SERVICE DESIGN:

Calibration block was designed to meet intent of ASME Boiler and Pressure Vessel Code Section XI 1974 Edition through Summer 1975 Addenda.

RECOMMENDATION:

Calibration block follows the design and requirements for Section V and Section XI of the 1983 Edition through Summer 1983 Addenda except for arc length of 52° instead of 45° as required by Figure T-547.1 and notch depth to 0.104T - 0.009T squared with tolerances of +10%-20% as required by Table III-3430-1. P-Number Groupings for Materials A106 Grade B Carbon Steel and A106 Grade C Carbon Steel are equivalent.

NOTES:

1. WHEN MEASURED FROM EITHER SIDE OF CENTERLINE MINIMUM LENGTH AT BOTTOM OF AXIAL NOTCHES TO BE 0.5" AS SHOWN IN SIDE VIEW.
2. NOTCH DEPTH 10% OF MEASURED THICKNESS +0.005"-0.010".
3. PREP ALLOWED IN AREA OF SIDE DRILLED HOLE SHALL NOT INFRINGE ON HOLE SIZE REQUIREMENTS.
4. CIRCUMFERENTIAL HOLES AND NOTCHES TO BE PLUS OR MINUS 0.1" FROM ENDS.
5. LOCATE AXIAL NOTCHES SO AS NOT TO IMPOSE ON END OF HOLES OR ON END OF NOTCHES AT CENTERLINE.
6. FLAT SIDE OF NOTCHES TO BE PERPENDICULAR NOTCHED SURFACES, WITHIN 2°.
7. HOLE LOCATION TO BE BASED ON ACTUAL "T".
8. SIDE DRILLED HOLE DIAMETER TOLERANCE TO BE WITHIN ±0.03"
9. DRILL HOLES PERPENDICULAR TO RADIUS.
10. ARC DIMENSION +360° AND -0.080".
11. LENGTH TOLERANCE TO BE +2.00"-0.25"

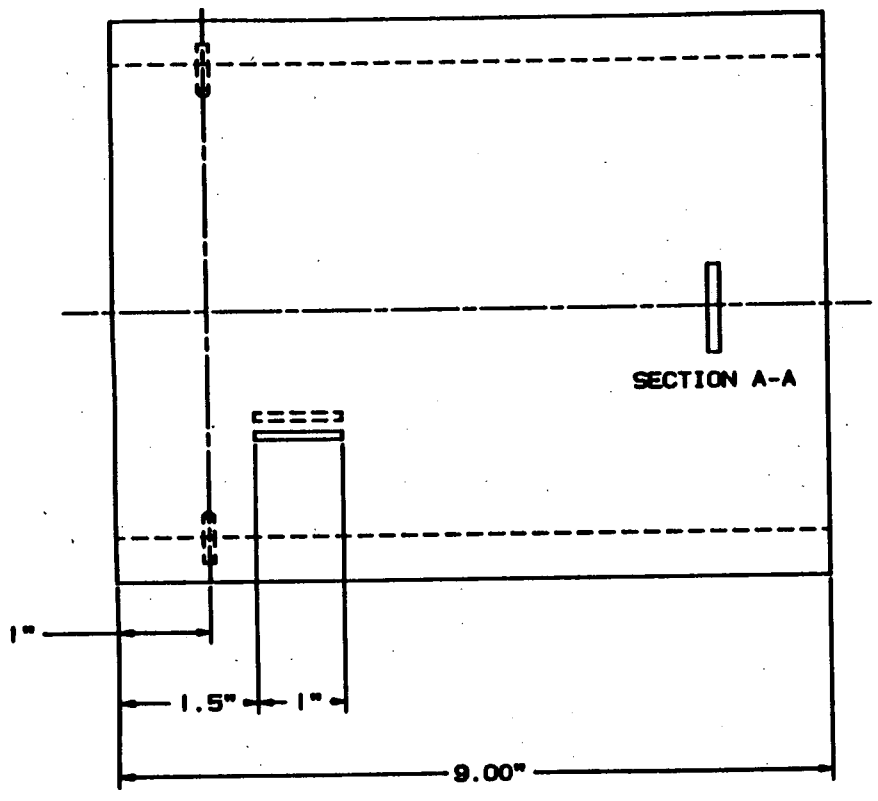

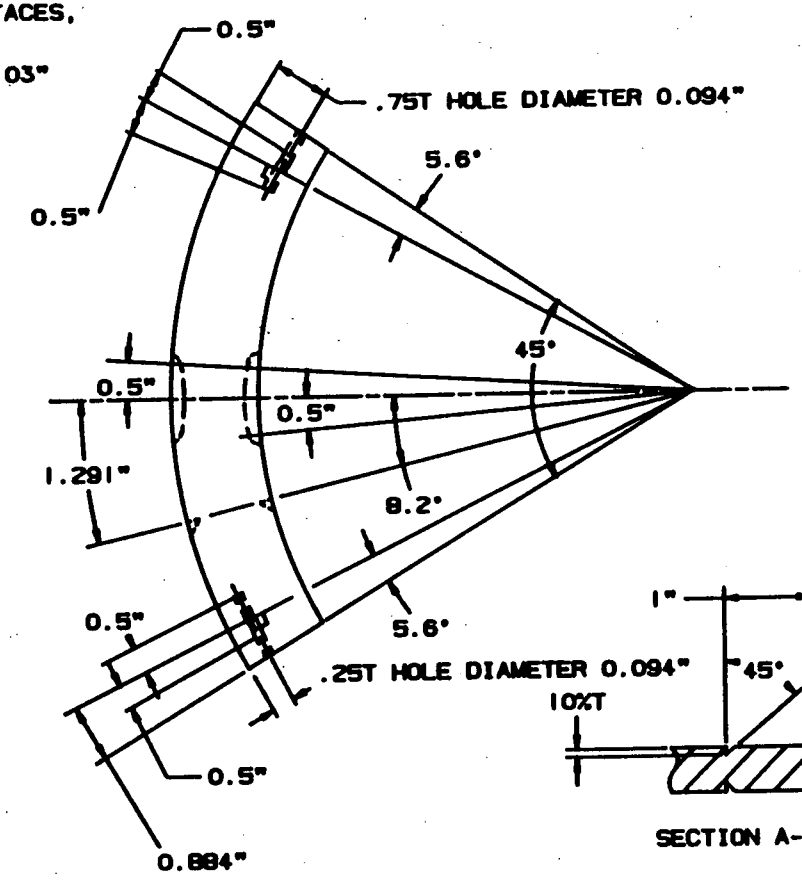

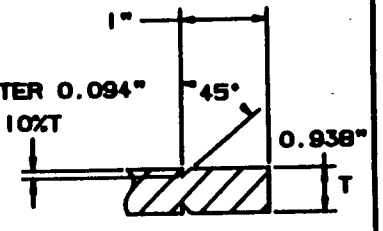

COMPUTER SYSTEM PLANT MODELING

HEAD TECHNICAL APPROVAL	Phillip C. Bukas	11-20-86
LEVEL III REVIEW	David Trumpf	11-20-86
ENG		
ENG		
MGR		

Westinghouse Electric Corporation
PLANT ENGINEERING DIVISION - PITTSBURGH, PA

TITLE
CALIBRATION BLOCK INT-5
18" SCH 80 FEEDWATER PIPING
18" SCH 80 .938"T-G
A106 GRADE B CARBON STEEL
HEAT NO.: L64609

SIZE C | DWG. NO. | REV.

REVISIONS | BY | DT.

NSD PA1010

Nuclear Service Division
QUALITY RELEASE

QR- 1719 REV. O

PURCHASE ORDER	PART NAME	DRAWING & REV.
406203	UT Calibration Blocks	6003 Rev 3, 6004 Rev 4

PAR NO.	CHG. NOTICE NO.	P.O. ITEM NO.	PROJ./S.O. NO.	QTY. ON ORDER	QTY. RELEASED
0	1	1 thru 6	JPPN-9227	42	41

SUPPLIER	E. SPEC. & REV.	ORDER
T Ling Specialists	N/A	COMPLETE ☑ YES ☐ NO

SERIAL OR IDENTIFICATION NOS.
UT 164609 (A thru H), 152177 (A thru E), N13396 (A thru H), M2458 (A thru H), 103914 (B thru H), 05369 (A thru D)

The equipment shown hereon is released by W Quality Assurance. Shipment may be made subject to authorization by W Purchasing. In the Audit Checklist below, an A indicates acceptability, a C indicates a contingency and a W indicates that W QA has waived the auditing or witnessing of the attribute. All non-applicable items are lined out.

AUDIT CHECKLIST

- [A] Material Certifications
- [ ] ~~Heat Treat Records~~
- [ ] ~~RT Film and Records~~
- [ ] ~~PT/MT Records~~
- [A] Visual
- [A] Dimensional
- [ ] ~~UT Records~~
- [ ] ~~Personnel Qualification: Welding, NDT~~
- [ ] ~~Non-Operating Electrical Tests~~
- [ ] ~~Operating Electrical Test~~
- [ ] ~~Pressure Test~~
- [ ] ~~Seat Tightness Test~~
- [ ] ~~Performance Test~~
- [A] Cleanliness
- [W] Packaging
- [ ] ~~Code Form~~
- [ ] ~~Painting~~
- [A] Label

DEVIATION NOTICES AND REMARKS (ALL DEVIATIONS HAVE BEEN APPROVED BY THE RESPONSIBLE WESTINGHOUSE ENGINEER UNLESS A SPECIFIC EXCEPTION IS STATED.)

THE SUPPLIER CERTIFIES that for the equipment and material released, all contractual requirements have been met. Approved deviations, if any, are listed above.

SUPPLIER SIGNATURE: [illegible] DATE:
TITLE:

The equipment shown hereon is released by W Quality Assurance. Shipment may be made subject to authorization by W Purchasing.

The equipment supplier has certified that the equipment above meets all requirements of the purchase order, drawings and specifications. Westinghouse has reviewed evidence supporting this release and except as specified above has detected no deviations from such requirements. This release does not waive any rights Westinghouse may have under the purchase order including Westinghouse's right to reject the equipment upon discovery of any such deviations after arrival at destination.

N R Moore 7-14-77
Westinghouse Quality Assurance Representative

SUPPLIER (ATTACH TO SHIPPING PAPERS)

TOOLING
SPECIALISTS
INCORPORATED

MACHINE TOOL BUILDERS — SPECIAL MACHINING — DIES — ENGINEERING SERVICE

P. O. BOX 251, LATROBE, PA. 15650 Phone: (412) 539-2534

LETTER OF COMPLIANCE

July 18, 1979

This is a statement of compliance to the requirements of Westinghouse Purchase Order Number 544-MXK-406203-RN.

All required processes, tests, and inspections have been performed. Inspection data sheets, heat treat charts, weld wire and material certifications are attached as required by the Purchase Order.

A listing of Purchase Order items in this shipment is attached.

Documented evidence of compliance supporting this certification is available at Tooling Specialists, Inc.

Sincerely yours,

Thomas D. Shearer

Thomas D. Shearer
Manager Special Products

TDS/sfz

INSPECTION REPORT

Page _____ of _____

TOOLING SPECIALISTS, INC.
Latrobe, Pa. 15650
Phone: (412) 539-2534

Dwg. #
Revision
Item
P. O. #
Work Order # 21-344

CUSTOMER:

PART DESCRIPTION:
18 Sch 80 Ht. # 164609

IF OUT OF TOLERANCE, PLACE X IN BOX TO RIGHT OF DIMENSION.

DRAWING DIMENSIONS		A	B	Part No. C X	Part No. D X	Part No. E X	Part No. F X	Part No. G X	Part No. H X
Nom. wall		.960	.962	.925	.905	.927	.938	.958	.974
Cir. Dorch	OD	.096	.095	.092	.090	.092	.093	.095	.097
	ID	.096	.095	.092	.090	.092	.093	.095	.097
Axial	OD	.096	.095	.091	.092	.092	.093	.096	.097
	ID	.096	.095	.091	.092	.092	.093	.096	.097
Length		9	9	9	9	9	9	9	9
A°		45°	45°	45°	45°	45°	45°	45°	45°
Hole dia.		3/32	3/32	3/32	3/32	3/32	3/32	3/32	3/32
1/4 T hole		.240	.237	.230	.229	.234	.236	.243	.242
3/4 T hole		.732	.699	.702	.693	.696	.702	.711	.723
	B	8°12'	8°12'	8°12'	8°12'	8°12'	8°12'	8°12'	8°12'
	C	5°36'	5°36'	5°36'	5°36'	5°36'	5°36'	5°36'	5°36'
	E	3°12'	3°12'	3°12'	3°12'	3°12'	3°12'	3°12'	3°12'
	F	3°36'	3°36'	3°36'	3°36'	3°36'	3°36'	3°36'	3°36'

INSPECTOR: Thomas J. Kline

RECEIVING INSPECTOR:

W.D.S. 10 Rev. 7 03/18/79

NOM. PIPE SIZE"	SCHED ULE	NOM. WALL 'T'"	O.D."	HOLE DIAM ETER"	HOLES 1/4T	HOLES 1/2T	HOLES 3/4T	NOTCHES CIRC. O.D.	NOTCHES CIRC. I.D.	NOTCHES AXIAL O.D.	NOTCHES AXIAL I.D.	NOTCHES Length"	NOM. ARC A°	B°	B" (O.D.)	C°	C" (O.D.)	E°	E"& F"	F°
18	80	.938	18	3/32	1	-	1	X	X	X	X	9	45	8.20	1.291	5.6	.884	3.2	.5	3.6

NOTE: Original dimensional requirements supplied to manufacturer.

General Data

1. E and F Dimension - minimum at bottom of notches (.500").
2. D Dimension - Typical all notches (10% of measured thickness) +.500" -.010".
3. A Dimension + to 360° and -.080" of arc.
4. Length +2" -.25".
5. Holes optional for T less than .8".
6. Flat blocks .8"T or less may contain 1/2T hole only.
7. Final acceptable dimensions to be based on intent.
8. Hole location to be based on actual "T".
9. Flat side of notches to be perpendicular notched surfaces, within 2°.
10. Side drilled holes to be within ± 1/32" tolerance.

Intent

1. C Dimension to be approximately 3/4" from edge of arc segment.
2. E and F dimension applicable to both sides of centerline so as to provide 1" long (at bottom) notches.
3. B Dimension to locate axial notches so as not to impose on end of hole at C location or on end of notches at centerline.
4. Circumferential reflectors to be positioned to allow 2T (Full Vee) calibration at 45° beam angle (not applicable for 1 1/2" Sch 80, 1 1/2" Sch 160, 2" Sch 80, 2" Sch 160, 3" Sch 40 & 3" Sch 80).
5. Circumferential holes and notches to be plus or minus .1" from ends.

70

United States Steel Corporation

01 000 0811 (REV 9 76)

TUBULAR PRODUCTS

METALLURGICAL TEST REPORT

REQ. JOB. CONTRACT NO

VENDOR SOLD TO: LOCAL

P. O. DATE

PURCHASE ORDER NO: A 2869

SHIPPERS NO.

MILL ORDER NO.: KC 94610

INVOICE NO.

VEHICLE IDENTITY

SHIP TO: TIOGA PIPE SUPPLY (3)

SPEC & INSP

WE HEREBY CERTIFY THAT THE CHEMI ANALYSES AND/OR TEST RESULTS SHOW THIS REPORT ARE CORRECT AS CONTAINE THE RECORDS OF THE COMPANY.

SIGNATURE: [illegible]

DATE: 12 29 78

THESE MILL TEST REPORTS APPLY TO YOUR P. O. #: [illegible]

TIOGA PIPE SUPPLY CO., INC.

TOOLING SPECIALIST
0616
Item 1

ITEM NO	MATERIAL DESCRIPTION SIZE	WALL	SPECIFICATION & GRADE	MATL	HEAT/ LOT NO	MIN. HYDRO PSI	YIELD STR PSI	TENSILE STR. PSI	ELONG. % IN 2"	GAGE WIDTH IN	FLAT
4	18"	.938	ASTM A106 ASME SA106 B	Sml	L64609	2740	41000	76700	43.0	1 1/2	OK

ITEM NO	HEAT NO.	TYPE	C	MN	P	S	SI	CU	NI	CR	MO
4	L64609	L	.23	.95	.011	.016	.24				

PAGE [illegible] OF

NEW YORK POWER AUTHORITY
INDIAN POINT NUCLEAR POWER PLANT
UNIT NO. 3
CALIBRATION BLOCKS

INDIAN POINT UNIT NO. 3
DESIGNATION : INT-6

COMPONENT/SYSTEM : 18" SCH 60 FEEDWATER PIPING

SIZE/SCHEDULE : 18" SCH 60 .750"T

MATERIAL : A106 GRADE B CARBON STEEL

HEAT OR IDENTITY NUMBER : L03914

ASME SECTION V AND XI 1983 EDITION THROUGH SUMMER 1983 ADDENDA REQUIREMENTS:

1. Section V : T-547
2. Section XI : III-3400
3. Material : A106 Grade C Carbon Steel
4. Size/Schedule: 18" SCH 60 .750"T

WESTINGHOUSE ELECTRIC CORPORATION - NSID - INSPECTION SERVICE DESIGN:

Calibration block was designed to meet intent of ASME Boiler and Pressure Vessel Code Section XI 1974 Edition through Summer 1975 Addenda.

RECOMMENDATION:

Calibration block follows the design and requirements for Section V and Section XI of the 1983 Edition through Summer 1983 Addenda except for arc length of 52° instead of 45° as required by Figure T-547.1 and notch depth to 0.104T - 0.009T squared with tolerances of +10%-20% as required by Table III-3430-1. P-Number Groupings for Materials A106 Grade B Carbon Steel and A106 Grade C Carbon Steel are equivalent.

NOTES:

1. WHEN MEASURED FROM EITHER SIDE OF CENTERLINE MINIMUM LENGTH AT BOTTOM OF AXIAL NOTCHES TO BE 0.5" AS SHOWN IN SIDE VIEW.
2. NOTCH DEPTH 10% OF MEASURED THICKNESS +0.005"-0.010".
3. PREP ALLOWED IN AREA OF SIDE DRILLED HOLE SHALL NOT INFRINGE ON HOLE SIZE REQUIREMENTS.
4. CIRCUMFERENTIAL HOLES AND NOTCHES TO BE PLUS OR MINUS 0.1" FROM ENDS.
5. LOCATE AXIAL NOTCHES SO AS NOT TO IMPOSE ON END OF HOLES OR ON END OF NOTCHES AT CENTERLINE.
6. FLAT SIDE OF NOTCHES TO BE PERPENDICULAR NOTCHED SURFACES, WITHIN 2°.
7. HOLE LOCATION TO BE BASED ON ACTUAL "T".
8. SIDE DRILLED HOLE DIAMETER TOLERANCE TO BE WITHIN ±0.03"
9. DRILL HOLES PERPENDICULAR TO RADIUS.
10. ARC DIMENSION +360° AND -0.080".
11. LENGTH TOLERANCE TO BE +2.00"-0.25"

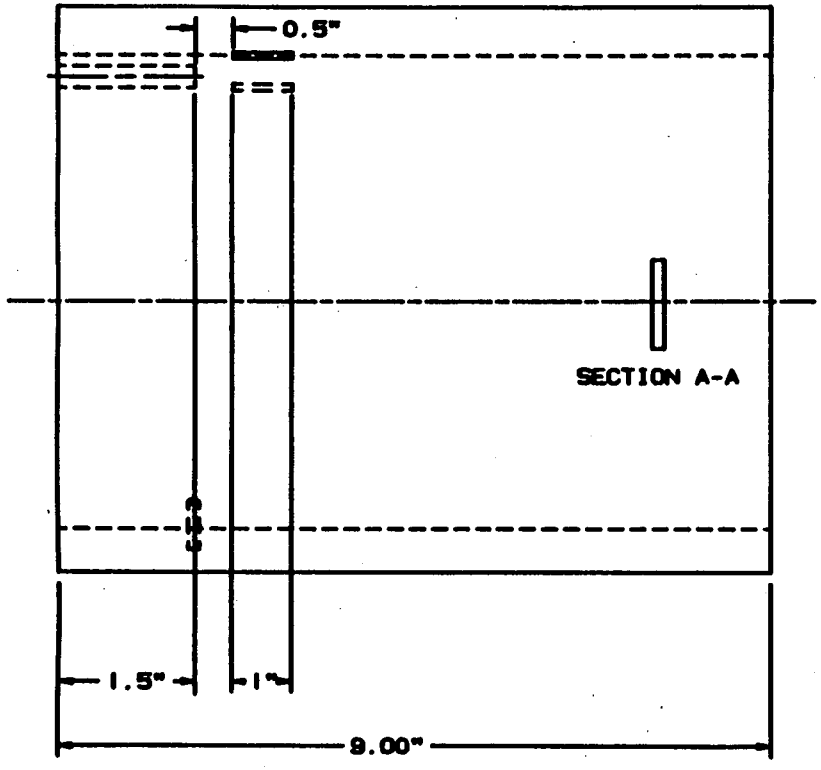

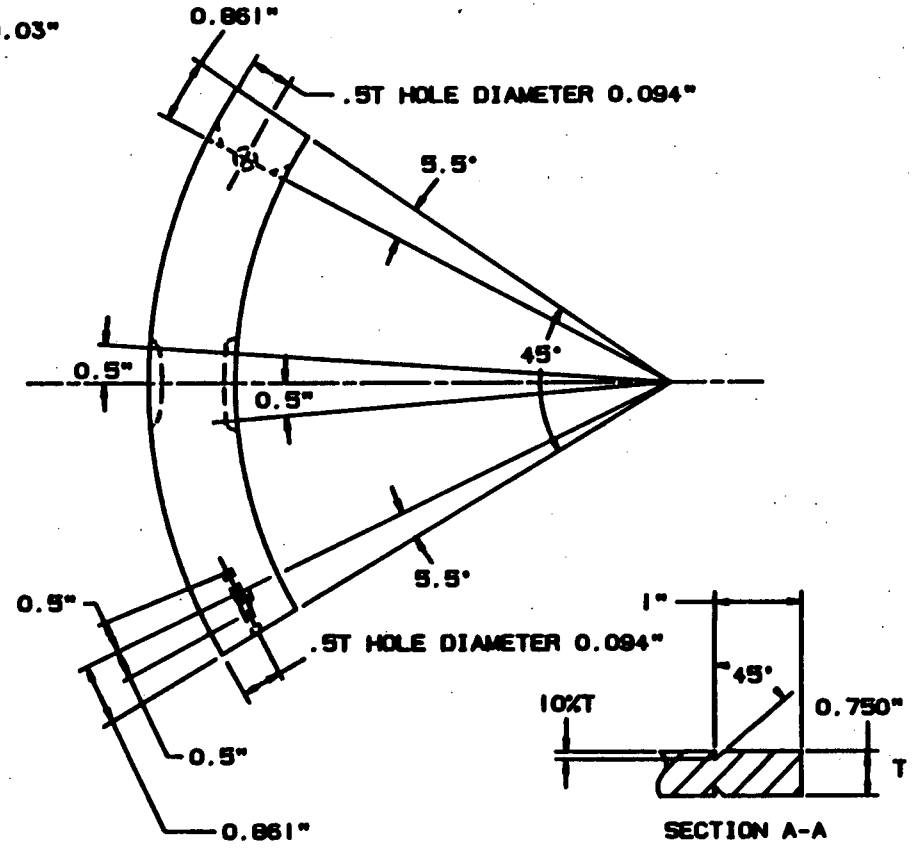

COMPUTER SYSTEM PLANT MODELING

NSSD TECHNICAL APPROVAL Phillip C. Burke	11-20-86	Westinghouse Electric Corporation PLANT ENGINEERING DIVISION - PITTSBURGH, PA
LEVEL III REVIEW David Kunk	11-20-86	TITLE CALIBRATION BLOCK INT-6 18" SCH 60 FEEDWATER PIPING 18" SCH 60 .750"T-F A106 GRADE B CARBON STEEL HEAT NO.: L03914
ENG		
ENG		
DSR		C DR. NO. REV.

REVISION

DT.

Nuclear Service Division
QUALITY RELEASE

QR- 1719 REV. O

PURCHASE ORDER	PART NAME	DRAWING & REV.
4P6203	UT Calibration Block	[illegible]

PAR NO.	CHG. NOTICE NO.	P.O. ITEM NO.	PROJ./S.O. NO.	QTY. ON ORDER	QTY. RELEASED
	1	14-6	JTPA-927	42	41

SUPPLIER	E. SPEC. & REV.	ORDER
T Log Specialists	N/A	COMPLETE ☑ YES ☐ NO.

SERIAL OR IDENTIFICATION NOS.

UT 114609 (A 14-H), 152177 (A 14-E), N13396 (A 14-H), M7459 (A 14-H), 103914 (B 14-H), 0[illegible]69 (A 14-D)

The equipment shown hereon is released by W Quality Assurance. Shipment may be made subject to authorization by W Purchasing. In the Audit Checklist below, an A indicates acceptability, a C indicates a contingency and a W indicates that W QA has waived the auditing or witnessing of the attribute. All non-applicable items are lined out.

AUDIT CHECKLIST

☑ Material Certifications	~~Non-Operating Electrical Tests~~
~~Heat Treat Records~~	~~Operating Electrical Test~~
~~RT Film and Records~~	~~Pressure Test~~
~~PT/MT Records~~	~~Seat Tightness Test~~
☑ Visual	~~Performance Test~~
☑ Dimensional	☑ Cleanliness
~~UT Records~~	☑ Packaging
~~Personnel Qualification: Welding, NDT~~	~~Code Form~~
	~~Painting~~
	☑ C of C

DEVIATION NOTICES AND REMARKS (ALL DEVIATIONS HAVE BEEN APPROVED BY THE RESPONSIBLE WESTINGHOUSE ENGINEER UNLESS A SPECIFIC EXCEPTION IS STATED.)

THE SUPPLIER CERTIFIES that for the equipment and material released, all contractual requirements have been met. Approved deviations, if any, are listed above.

SUPPLIER SIGNATURE DATE

TITLE

The equipment shown hereon is released by W Quality Assurance. Shipment may be made subject to authorization by W Purchasing.

The equipment supplier has certified that the equipment above meets all requirements of the purchase order, drawings and specifications. Westinghouse has reviewed evidence supporting this release and except as specified above has detected no deviations from such requirements. This release does not waive any rights Westinghouse may have under the purchase order including Westinghouse's right to reject the equipment upon discovery of any such deviations after arrival at destination.

N R Mo[illegible] 7-19-7[illegible]

Westinghouse Quality Assurance Representative

SUPPLIER (ATTACH TO SHIPPING PAPERS)

TOOLING
SPECIALISTS
INCORPORATED

MACHINE TOOL BUILDERS — SPECIAL MACHINING — DIES — ENGINEERING SERVICE

P. O. BOX 251, LATROBE, PA. 15650 Phone: (412) 539-2534

LETTER OF COMPLIANCE

July 18, 1979

This is a statement of compliance to the requirements of Westinghouse Purchase Order Number 544-MXK-406203-RN.

All required processes, tests, and inspections have been performed. Inspection data sheets, heat treat charts, weld wire and material certifications are attached as required by the Purchase Order.

A listing of Purchase Order items in this shipment is attached.

Documented evidence of compliance supporting this certification is available at Tooling Specialists, Inc.

Sincerely yours,

Thomas D. Shearer

Thomas D. Shearer
Manager Special Products

TDS/sfz

74

INSPECTION REPORT

Page _____ of _____

TOOLING SPECIALISTS, INC.
Latrobe, Pa. 15650
Phone: (412) 539-2534

Dwg. #

Revision | Item

P. O. #

Work Order # 21-344

CUSTOMER:

PART DESCRIPTION:
18 Sch 60 Ht. #03914

IF OUT OF TOLERANCE, PLACE X IN BOX TO RIGHT OF DIMENSION.

DRAWING DIMENSIONS		B	Part No. C X	Part No. D X	Part No. E X	Part No. F X	Part No. G X	Part No. H X
Nom. wall Thickness		.722	.744	.770	.805	.805	.791	.750
Cir. Notch	O.D.	.072	.074	.077	.080	.080	.079	.075
	I.D.	.072	.074	.077	.080	.080	.079	.075
Axial Notch	O.D.	.074	.075	.077	.079	.078	.076	.075
	I.D.	.074	.075	.077	.079	.078	.076	.075
Length		8.810	8.810	8.810	8.810	8.810	8.810	8.810
A°		45°	45°	45°	45°	45°	45°	45°
'le dia.		3/32	3/32	3/32	3/32	3/32	3/32	3/32
1/2T hole, end		.381	.387	.388	.392	.381	.377	.378
1/2T hole, side		.381	.386	.392	.389	.378	.378	.373
	C	5°30'	5°30'	5°30'	5°30'	5°30'	5°30'	5°30'
	E	3°12'	3°12'	3°12'	3°12'	3°12'	3°12'	3°12'
	F	3°30'	3°30'	3°30'	3°30'	3°30'	3°30'	3°30'

INSPECTOR: Thomas Shum

RECEIVING INSPECTOR:

W.D.S. 10 Rev. 7 03/18/79

NOM. PIPE SIZE"	SCHED ULE	NOM. WALL 'T'"	O.D."	HOLE DIAM ETER"	HOLES 1/4T	1/2T	3/4T	NOTCHES CIRC. O.D.	CIRC. I.D.	AXIAL O.D.	AXIAL I.D.	Length"	NOM. ARC A°	B°	B" (O.D.)	C°	C" (O.D.)	E°	E"& F"	F°
18	60	.750	18	3/32	-	2	-	X	X	X	X	9	45	-	-	5.5	.861	3.2	.5	3.5

NOTE: Original dimensional requirements supplied to manufacturer.

General Data

1. E and F Dimension - minimum at bottom of notches (.500").
2. D Dimension - Typical all notches (10% of measured thickness) +.500" -.010".
3. A Dimension + to 360° and -.080" of arc.
4. Length +2" -.25".
5. Holes optional for T less than .8".
6. Flat blocks .8"T or less may contain 1/2T hole only.
7. Final acceptable dimensions to be based on intent.
8. Hole location to be based on actual "T".
9. Flat side of notches to be perpendicular notched surfaces, within 2°.
10. Side drilled holes to be within ± 1/32" tolerance.

Intent

1. C Dimension to be approximately 3/4" from edge of arc segment.
2. E and F dimension applicable to both sides of centerline so as to provide 1" long (at bottom) notches.
3. B Dimension to locate axial notches so as not to impose on end of hole at C location or on end of notches at centerline.
4. Circumferential reflectors to be positioned to allow 2T (Full Vee) calibration at 45° beam angle (not applicable for 1 1/2" Sch 80, 1 1/2" Sch 160, 2" Sch 80, 2" Sch 160, 3" Sch 40 & 3" Sch 80).
5. Circumferential holes and notches to be plus or minus .1" from ends.

7

18" 60 (.750w) A-106-B

PRODUCTION DEPARTMENT – METALLURGICAL

United States Steel Corporation

TEST REPORT OF TUBULAR PRODUCTS

WORKS LORAIN-CUYAHOGA U.S.S. ORDER NO. LF98575 LOAD TALLY OR INVOICE NO.

CUSTOMER ORDER NO. 75787-R5

CAR OR TRUCK NO. SHIPPER NO. & DATE 10/10.75

Communications

SOLD TO: CAPITOL PIPE & STEEL PRODUCTS INC 730 SUPERIOR AVE CARNEGIE PA 15106

MAIL TO: CAPITOL PIPE & STEEL PRODUCTS INC 730 SUPERIOR AVE CARNEGIE PA 15106 3

WE HEREBY CERTIFY THAT THE FIGURES SET FORTH BELOW ARE CORRECT, AS CONTAINED IN THE RECORDS OF THE COMPANY.

INSP. T/R: MILL CERTIFIED

F = FULL SECTION-GAUGE WIDTH
* = 3/4 INCH GAUGE WIDTH
** = 1 1/2 INCH GAUGE WIDTH

MATERIAL: SMLS

SIGNATURE E. L. BARTOLOTTA CHIEF METALLURGIST

DATE 10/14/75

ITEM NUMBER	MATERIAL DESCRIPTION: O.D. SIZE INCHES	WALL INCHES	GRADE	SPECIFICATION	HEAT NUMBER	MIN. HYDRO TEST PRESSURE P.S.I.	YIELD STRENGTH P.S.I.	TENSILE STRENGTH P.S.I.	ELONGATION INCHES	ELONGATION %
1	18	750	B	ASTM A106	L03910	2190	39600	73500	2	400 **
	ALSO CERTIFIED TO ASME SA106							FLATTENING TESTS OK		
1	18	750	B	ASTM A106	L03912	2190	43100	72500	2	420 **
	ALSO CERTIFIED TO ASME SA106							FLATTENING TESTS OK		
1	18	750	B	ASTM A106	L03914	2190	38300	72200	2	400 **
	ALSO CERTIFIED TO ASME SA106							FLATTENING TESTS OK		
1	18	750	B	ASTM A106	L03920	2190	41300	73900	2	400 **
	ALSO CERTIFIED TO ASME SA106							FLATTENING TESTS OK		
1	18	750	B	ASTM A106	N13887	2190	39200	68800	2	420 **
	ALSO CERTIFIED TO ASME SA106							FLATTENING TESTS OK		

Tooling Specialists
0616
R9-1444A
P46845

SPECIMEN SIZE TESTED ACCORDING TO COMPANY RECORDS CONFORMS TO THE REQUIREMENTS OF THE SPECIFICATION LISTED ABOVE.

ITEM NO.	TYPE	HEAT NO.	C	Mn	P	S	Si	Cu	Ni	Cr	Mo	Sn	N	V	B	Ti	Cb	Co
1	LADL	L03910	22	80	010	018	170											
1	CHK	L03910	25	84	009	021	150											
1	LADL	L03912	23	89	010	017	160											
1	CHK	L03912	24	89	011	020	150											
1	LADL	L03914	24	84	009	022	160											
1	CHK	L03914	23	84	009	026	150											
1	LADL	L03920	26	80	005	017	180											
1	CHK	L03920	25	80	007	019	160											
1	LADL	N13887	22	78	005	014	170											

OCT 16 RECD Capitol Pipe

NEW YORK POWER AUTHORITY
INDIAN POINT NUCLEAR POWER PLANT
UNIT NO. 3
CALIBRATION BLOCKS

INDIAN POINT UNIT NO. 3 DESIGNATION	:	INT-7
COMPONENT/SYSTEM	:	14" SCH 140 RHR HOTLEG TAKE-OFF AND PRESSURIZER SURGE PIPING
SIZE/SCHEDULE	:	14" SCH 140 1.250"T
MATERIAL	:	A376 TP316 STAINLESS STEEL
HEAT OR IDENTITY NUMBER	:	2637-4-2

ASME SECTION V AND XI 1983 EDITION THROUGH SUMMER 1983 ADDENDA REQUIREMENTS:

1. Section V : T-110 and T-548
2. Section XI : Article III-1100, Supplement 7 and IMA-2250
3. Material : A376 TP316 Stainless Steel
4. Size/Schedule: 14" SCH 140 1.250"T

WESTINGHOUSE ELECTRIC CORPORATION - NSID - INSPECTION SERVICE DESIGN:

Calibration block was designed to meet intent of ASME Boiler and Pressure Vessel Code Section XI 1974 Edition through Summer 1975 Addenda.

RECOMMENDATION:

Calibration block design follows the guidelines of Section V and Section XI 1983 Edition through Summer 1983 Addenda for Austenitic Piping. Modifications of this design to meet the requirements of Section V and XI - 1983 Edition through Summer 1983 Addenda for calibration blocks for "ferritic piping and design T-547.1" would be to increase arc length to 70° and locate longitudinal notches a minimum of 1.25" from edge of block and as required by Table III-3430-1 notch depth to 0.104T - 0.009T squared with tolerance of +10%-20%.

NOTES:

1. WHEN MEASURED FROM EITHER SIDE OF CENTERLINE MINIMUM LENGTH AT BOTTOM OF AXIAL NOTCHES TO BE 0.5" AS SHOWN IN SIDE VIEW.
2. NOTCH DEPTH 10% OF MEASURED THICKNESS +0.005"-0.010".
3. PREP ALLOWED IN AREA OF SIDE DRILLED HOLES SHALL NOT INFRINGE ON HOLE SIZE REQUIREMENTS.
4. CIRCUMFERENTIAL HOLES AND NOTCHES TO BE PLUS OR MINUS 0.1" FROM ENDS.
5. LOCATE AXIAL NOTCHES SO AS NOT TO IMPOSE ON END OF HOLES OR ON END OF NOTCHES AT CENTERLINE.
6. FLAT SIDE OF NOTCHES TO BE PERPENDICULAR NOTCHED SURFACES, WITHIN 2°.
7. HOLE LOCATION TO BE BASED ON ACTUAL "T".
8. SIDE DRILLED HOLE DIAMETER TOLERANCE TO BE WITHIN ±0.03"
9. DRILL HOLES PERPENDICULAR TO RADIUS.
10. ARC DIMENSION +360° AND -0.080".
11. LENGTH TOLERANCE TO BE +2.00"-0.25"

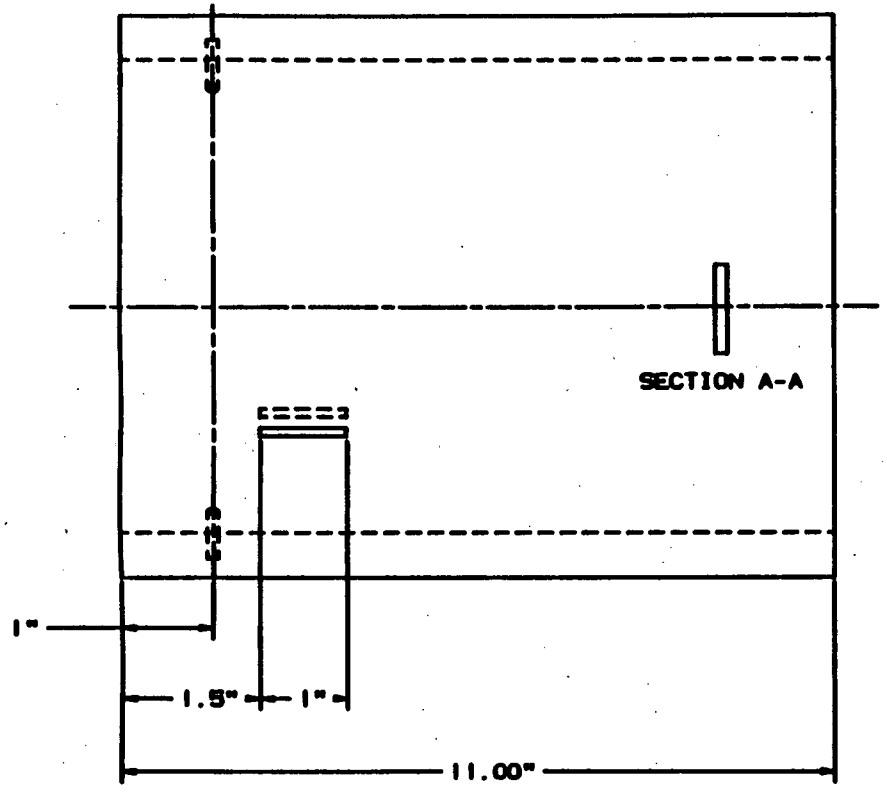

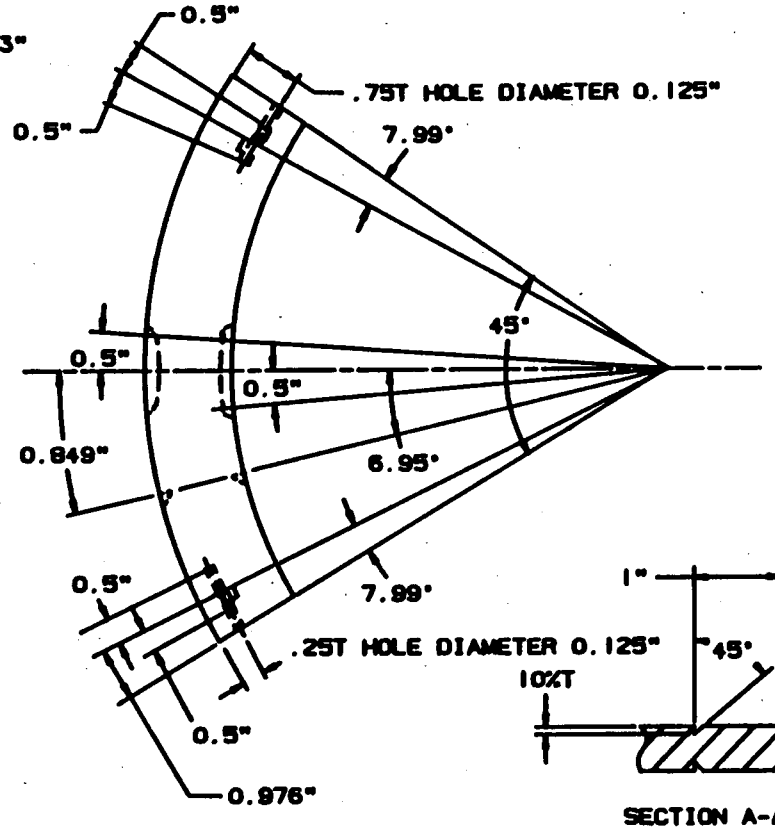

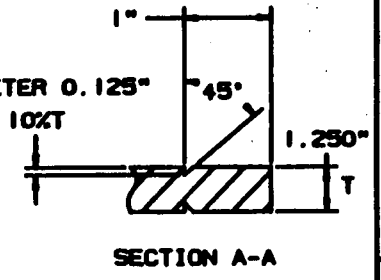

COMPUTER SYSTEM PLANT MODELING

HDQ TECHNICAL APPROVAL	11-20-86	Westinghouse Electric Corporation PLANT ENGINEERING DIVISION - PITTSBURGH, PA
LEVEL III REVIEW	11-20-86	TITLE CALIBRATION BLOCK INT-7 14" SCH 140 RHR HOTLEG TAKE-OFF AND PRESSURIZER SURGE PIPING 14" SCH 140 1.250"T-B A376 TP316 STAINLESS STEEL IDENTITY NO.: 2637-4-2
ENG		
ENG		
MFR		C — DWG. NO. — REV.

REVISIONS

NSD PA1010

Nuclear Service Division
QUALITY RELEASE

QR- 1619 REV. O

PURCHASE ORDER	PART NAME	DRAWING & REV.
544-XK-287369-RN	UT CALIBRATION BLOCKS	W007 Rev1, W004 Rev4, W003 Rev3, W005 Rev3, W005 Rev3

PAR NO.	CHG. NOTICE NO.	P.O. ITEM NO.	PROJ./S.O. NO.	QTY. ON ORDER	QTY. RELEASED
0	3	001 thru 005, 008 thru 016	WFSN-9323	66	66

SUPPLIER	E. SPEC. & REV.	ORDER
TOOLING SPECIALISTS	N/A	COMPLETE ☑ YES ☐ NO

SERIAL OR IDENTIFICATION NOS.
HT #'s: 87623, 01003 (A thru D), 26896 (A & B), M9290 (A & B), M2060 (A & B), D61232 (A thru F), 3122-5-2 (A thru E), 2637-4-2 (A thru F), M9959 (A thru D), M0937 (A thru E), 1971-12-1 (A thru F), 805222-1 (A thru F).

The equipment shown hereon is released by W Quality Assurance. Shipment may be made subject to authorization by W Purchasing. In the Audit Checklist below, an A indicates acceptability, a C indicates a contingency and a W indicates that W QA has waived the auditing or witnessing of the attribute. All non-applicable items are lined out.

AUDIT CHECKLIST

☑ A Material Certifications	~~☐ Non-Operating Electrical Tests~~
~~☐ Heat Treat Records~~	~~☐ Operating Electrical Test~~
~~☐ RT Film and Records~~	~~☐ Pressure Test~~
~~☐ PT/MT Records~~	~~☐ Seat Tightness Test~~
☑ A Visual	~~☐ Performance Test~~
☑ A Dimensional	☑ A Cleanliness
~~☐ UT Records~~	☑ Packaging
~~☐ Personnel Qualification: Welding, NDT~~	~~☐ Code Form~~
~~☐~~	~~☐ Painting~~
~~☐~~	~~☐~~

DEVIATION NOTICES AND REMARKS (ALL DEVIATIONS HAVE BEEN APPROVED BY THE RESPONSIBLE WESTINGHOUSE ENGINEER UNLESS A SPECIFIC EXCEPTION IS STATED.)

Several pieces for a certain heat no. noted above by alphanumeric designation.

THE SUPPLIER CERTIFIES that for the equipment and material released, all contractual requirements have been met. Approved deviations, if any, are listed above.

SUPPLIER SIGNATURE: [signature] DATE: 3/27/79
TITLE:

The equipment shown hereon is released by W Quality Assurance. Shipment may be made subject to authorization by W Purchasing.

The equipment supplier has certified that the equipment above meets all requirements of the purchase order, drawings and specifications. Westinghouse has reviewed evidence supporting this release and except as specified above has detected no deviations from such requirements. This release does not waive any rights Westinghouse may have under the purchase order including Westinghouse's right to reject the equipment upon discovery of any such deviations after arrival at destination.

K. R. Moran 3-27-79
Westinghouse Quality Assurance Representative

SUPPLIER (ATTACH TO SHIPPING PAPERS)

TOOLING
SPECIALISTS
INCORPORATED

MACHINE TOOL BUILDERS — SPECIAL MACHINING — DIES — ENGINEERING SERVICE

P. O. BOX 251, LATROBE, PA. 15650 Phone: (412) 539-2534

Letter of Compliance

March 27, 1979

This is a statement of compliance to the requirements of Westinghouse Purchase Order Number 544-XK-287369-RN.

All required processes, tests and inspections have been performed. Inspection data sheets, heat treat charts, weld wire and material certifications are attached as required by the Purchase Order.

A listing of Purchase Order items in this shipment is attached.

Documented evidence of compliance supporting this certification is available at Tooling Specialists.

Sincerely yours,

Thomas D Shearer

Thomas D. Shearer
Manager Special Products

TDS/sfz

INSPECTION REPORT

Page _____ of _____

TOOLING SPECIALISTS, INC.
Latrobe, Pa. 15650
Phone: (412) 539-2534

Dwg. # Fig 003 Rev. 3
P. O. #
Revision I
Work Order # 31-077

CUSTOMER:

W 003 Rev 3

PART DESCRIPTION:

14 Sch 140 H.T.# 2637-4-2

IF OUT OF TOLERANCE, PLACE X IN BOX TO RIGHT OF DIMENSION.

DRAWING DIMENSIONS		Part No. A	X	Part No. B	X	Part No. C	X	Part No. D	X	Part No. E	X	Part No. F
Nom. Wall Thickness		1.205		1.208		1.205		1.206		1.215		1.204
Cir. Notch	OD	.120		.120		.121		.120		.121		.120
	ID	.120		.120		.121		.120		.121		.120
Axial Notch	OD	.119		.119		.118		.120		.120		.120
	ID	.119		.119		.118		.120		.120		.120
Length		11"		11"		11"		11"		11"		11"
1/4 T. Hole	1/2 dia.	.298		.300		.297		.298		.304		.302
3/4 T Hole	1/2 dia.	.897		.897		.897		.893		.906		.909
	B	6°54'		6°54'		6°54'		6°54'		6°54'		6°54
	C	7°59'		7°59'		7°59'		7°59'		7°59'		7°59
	E	4°5'		4°5'		4°5'		4°5'		4°5'		4°5'
	F	5°7'		5°7'		5°7'		5°7'		5°7'		5°7'
A°		45°		45°		45°		45°		45°		45°

INSPECTOR: [signature] 3/27/70

RECEIVING INSPECTOR:

E.5

W.D.S. 10 Rev. 7 03/18/79

NOM. PIPE SIZE"	SCHED ULE	NOM. WALL 'T'"	O.D."	HOLE DIAM ETER"	HOLES 1/4T	1/2T	3/4T	NOTCHES CIRC. O.D.	CIRC. I.D.	AXIAL O.D.	AXIAL I.D.	Length"	NOM. ARC A°	B°	B" (O.D.)	C°	C" (O.D.)	E°	E"& F"	F°
14	140	1.25	14	1/8	1	-	1	X	X	X	X	11	45	6.95	.849	7.99	.976	4.09	.5	5.12

NOTE: Original dimensional requirements supplied to manufacturer.

General Data

1. E and F Dimension - minimum at bottom of notches (.500").
2. D Dimension - Typical all notches (10% of measured thickness) +.500" -.010".
3. A Dimension + to 360° and -.080" of arc.
4. Length +2" -.25".
5. Holes optional for T less than .8".
6. Flat blocks .8"T or less may contain 1/2T hole only.
7. Final acceptable dimensions to be based on intent.
8. Hole location to be based on actual "T".
9. Flat side of notches to be perpendicular notched surfaces, within 2°.
10. Side drilled holes to be within ± 1/32" tolerance.

Intent

1. C Dimension to be approximately 3/4" from edge of arc segment.
2. E and F dimension applicable to both sides of centerline so as to provide 1" long (at bottom) notches.
3. B Dimension to locate axial notches so as not to impose on end of hole at C location or on end of notches at centerline.
4. Circumferential reflectors to be positioned to allow 2T (Full Vee) calibration at 45° beam angle (not applicable for 1 1/2" Sch 80, 1 1/2" Sch 160, 2" Sch 80, 2" Sch 160, 3" Sch 40 & 3" Sch 80).
5. Circumferential holes and notches to be plus or minus .1" from ends.

Comm. rm.

☐ ASTM A-312 ☐ ASME SA-312
☒ ASTM A-376 ☒ ASME SA-376
☐ CW 1401-F

Extrusion Facility

Curtiss-Wright Corporation

60 Grider Street • Buffalo, New York 14215 DATE: November 7, 1975

CUSTOMER CAPITOL PIPE & STEEL PRODUCTS, INC. CUSTOMER P.O. 71630-00N

PART NUMBER 14.000" O.D. x 1.250" A.W. (Sch 140) SALES ORDER NO. 2637

PART NAME PRESSURE TUBING SPECIFICATIONS TYPE 316/316H

	REQUIRED	MILL HEAT NO. 535879 C.W. Code 2637-1 2637-2 2637-4-2		MILL HEAT NO. 535847 C.W. Code 2637-12	
ELEMENT		HEAT LOT NO. 092275		HEAT LOT NO. 092275	
CARBON	0.04 - 0.08	Mill 0.056	Check 0.06	Mill 0.07	Check 0.075
MANGANESE	2.00 MAX.	1.72	1.77	1.43	1.44
SILICON	0.75 MAX.	0.42	0.36	0.22	0.27
CHROMIUM	16.0 - 18.0	16.52	16.50	16.62	16.70
NICKEL	11.0 - 14.0	11.35	11.25	11.29	11.23
PHOSPHORUS	0.040 Max.	0.026	0.025	0.028	0.027
SULPHUR	0.030 MAX.	0.018	0.017	0.019	0.020
MOLYBDENUM	2.0 - 3.0	2.10	2.05	2.35	2.30

14" Sch. 140 TP316/316H

A-376

Tooling Specialist

4805

TEST	TRANSVERSE	PHYSICAL PROPERTIES	
TENSILE, PSI	75,000 MIN.	83,900	85,300
YIELD, PSI	30,000 MIN.	38,200	42,400
ELONG, % IN 2 IN.	20 MIN.	54	56
FLATTENING		OK	OK

PARTS WERE HYDROSTATICALLY TESTED AT 2679 P.S.I. FOR A MINIMUM OF 5 SECONDS. NO DEFECTS NOTED.

Parts were ground as a final cleaning operation allowed by ASME Case Code #1525.

Parts were heated above 1950°F for 1/2 hour and rapidly cooled.

We hereby certify to the chemical analysis and physical tests reported herein.

Supervisor of Metallurgy G. G. Heart

Sworn to before me this 7th day of November 1975. Patricia Bronzino, Notary Public, State of New York, Qualified in Erie County, My Commission expires March 30, 1976.

Patricia Bronzino

NEW YORK POWER AUTHORITY
INDIAN POINT NUCLEAR POWER PLANT
UNIT NO. 3
CALIBRATION BLOCKS

INDIAN POINT UNIT NO. 3 DESIGNATION	:	INT-8
COMPONENT/SYSTEM	:	14" SCH 40 RHR PIPING
SIZE/SCHEDULE	:	14" SCH 40 .438"T
MATERIAL	:	A358 TP316 CLASS 1 STAINLESS STEEL
HEAT OR IDENTITY NUMBER	:	71771

ASME SECTION V AND XI 1983 EDITION THROUGH SUMMER 1983 ADDENDA REQUIREMENTS:

1. Section V : T-110 and T-548
2. Section XI : Article III-1100, Supplement 7 and IMA-2250
3. Material : A358 TP304 Stainless Steel
4. Size/Schedule: 14" SCH 40 .438"T

WESTINGHOUSE ELECTRIC CORPORATION - NSID - INSPECTION SERVICE DESIGN:

Calibration block was designed to meet intent of ASME Boiler and Pressure Vessel Code Section XI 1974 Edition through Summer 1975 Addenda.

RECOMMENDATION:

Calibration block design follows the guidelines of Section V and Section XI 1983 Edition through Summer 1983 Addenda for Austenitic Piping. Class 2 Piping less than or equal to 1/2 inch thickness no longer requires Volumetric examination per the requirements of Section XI 1983 Edition thru Summer 1983 Addenda. Modifications of this design to meet the requirements of Section V and XI - 1983 Edition through Summer 1983 Addenda for calibration blocks for "ferritic piping and design T-547.1" would be to increase length to 8" and arc length to 70° and as required by Table III-3430-1 notch depth to 0.104T - 0.009T squared with tolerance of +10%-20%. P-Number Groupings for Materials A358 TP316 Class 1 Stainless Steel and A358 TP304 Stainless Steel are equivalent.

NOTES:

1. WHEN MEASURED FROM EITHER SIDE OF CENTERLINE MINIMUM LENGTH AT BOTTOM OF AXIAL NOTCHES TO BE 0.5" AS SHOWN IN SIDE VIEW.
2. NOTCH DEPTH 10% OF MEASURED THICKNESS +0.005"-0.010".
3. PREP ALLOWED IN AREA OF SIDE DRILLED HOLE SHALL NOT INFRINGE ON HOLE SIZE REQUIREMENTS.
4. CIRCUMFERENTIAL HOLES AND NOTCHES TO BE PLUS OR MINUS 0.1" FROM ENDS.
5. LOCATE AXIAL NOTCHES SO AS NOT TO IMPOSE ON END OF HOLES OR ON END OF NOTCHES AT CENTERLINE.
6. FLAT SIDE OF NOTCHES TO BE PERPENDICULAR NOTCHED SURFACES, WITHIN 2°.
7. HOLE LOCATION TO BE BASED ON ACTUAL "T".
8. SIDE DRILLED HOLE DIAMETER TOLERANCE TO BE WITHIN ±0.03"
9. DRILL HOLES PERPENDICULAR TO RADIUS.
10. ARC DIMENSION +360° AND -0.080".
11. LENGTH TOLERANCE TO BE +2.00"-0.25"

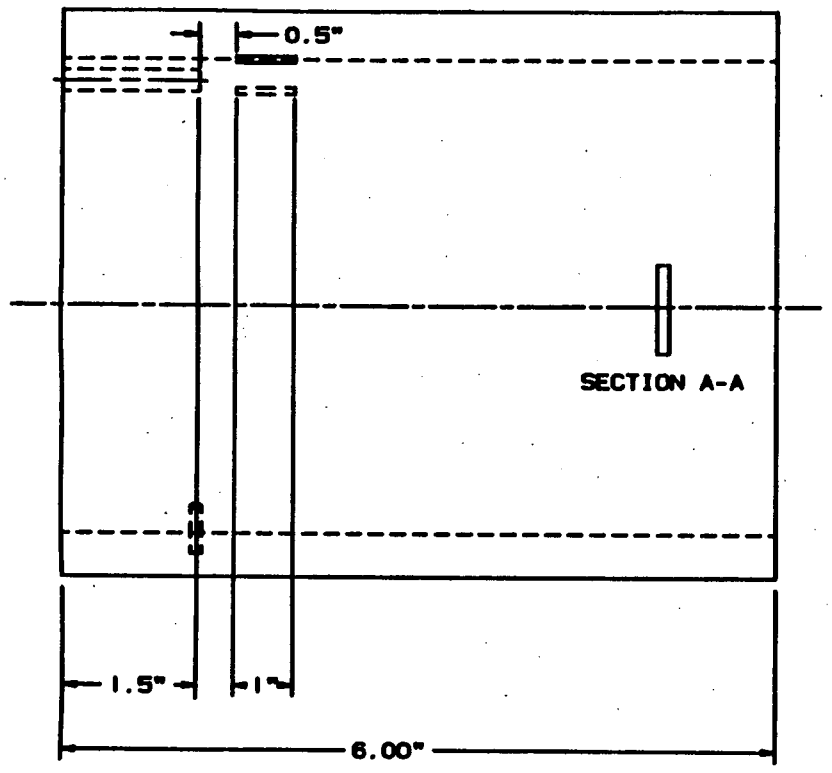

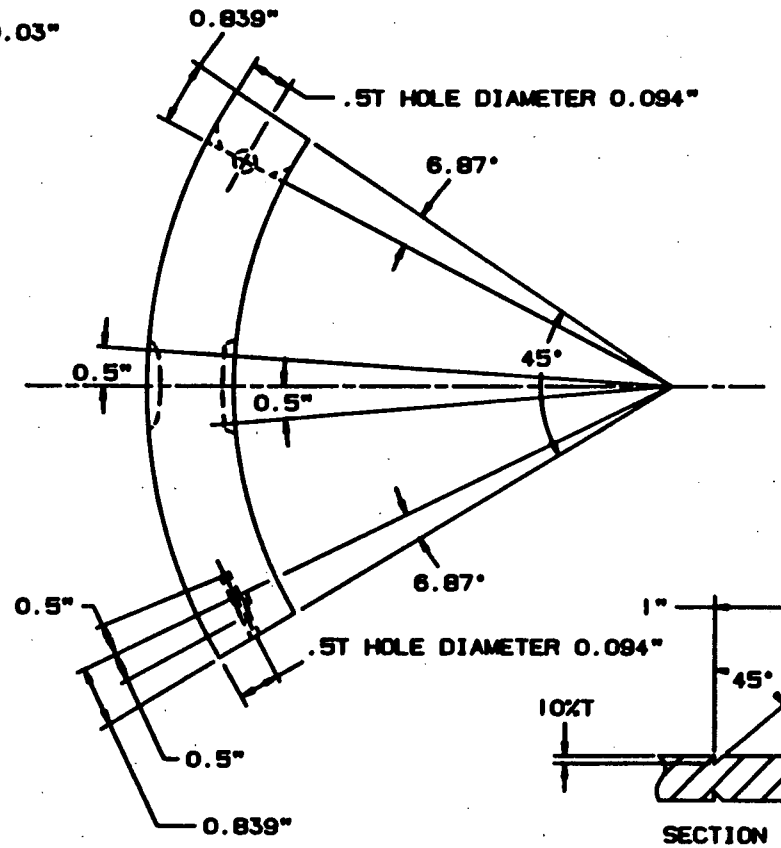

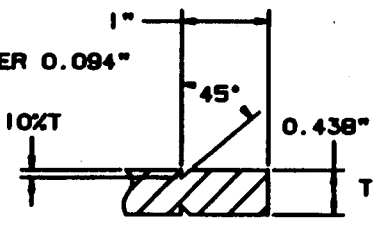

SECTION A-A

COMPUTER SYSTEM PLANT MODELING

REVISIONS	NEED TECHNICAL APPROVAL Phillip E. Burkes	11-20-86
	LEVEL III REVIEW David Kunk	11-21-86
	ENG	
	ENG	
	MGR	

Westinghouse Electric Corporation
PLANT ENGINEERING DIVISION - PITTSBURGH, PA

TITLE
CALIBRATION BLOCK INT-8
14" SCH 40 RHR PIPING
14" SCH 40 .438"T-8
A358 TP316 CLASS 1 STAINLESS STEEL
HEAT NO.: 71771

SIZE C | DW. NO. | REV.

NSD PA1010

Nuclear Service Division
QUALITY RELEASE

QR- 1619 REV. 0

PURCHASE ORDER	PART NAME	DRAWING & REV.
544-XK-287369-RN	UT CALIBRATION BLOCKS	W007 Rev 1, W004 Rev 4, W003 Rev 3, W005 Rev 3, W005 Rev 3

PAR NO.	CHG. NOTICE NO.	P.O. ITEM NO.	PROJ./S.O. NO.	QTY. ON ORDER	QTY. RELEASED
0	3	007 thru 005, 008 thru 016	WFSN-9323	66	66

SUPPLIER	E. SPEC. & REV.	ORDER
TOOLING SPECIALISTS	N/A	COMPLETE ☑ YES ☐ NO

SERIAL OR IDENTIFICATION NOS.
HT #'s: 87623, 01003 (A thru D), 26896 (A & B), M9290 (A & B), M2060 (A & B), D61232 (A thru F), 3122-5-2 (A thru E), 2637-4-2 (A thru F), M9959 (A thru D), M0937 (A thru E), 1971-12-1 (A thru F), 805222-1 (A thru F),

The equipment shown hereon is released by W Quality Assurance. Shipment may be made subject to authorization by W Purchasing. In the Audit Checklist below, an A indicates acceptability, a C indicates a contingency and a W indicates that W QA has waived the auditing or witnessing of the attribute. All non-applicable items are lined out.

AUDIT CHECKLIST

- [A] Material Certifications
- ~~[ ] Heat Treat Records~~
- ~~[ ] RT Film and Records~~
- ~~[ ] PWHT Records~~
- [A] Visual
- [A] Dimensional
- ~~[ ] UT Records~~
- ~~[ ] Personnel Qualification: Welding, NDT~~
- ~~[ ]~~
- ~~[ ]~~
- ~~[ ] Non-Operating Electrical Tests~~
- ~~[ ] Operating Electrical Test~~
- ~~[ ] Pressure Test~~
- ~~[ ] Seat Tightness Test~~
- ~~[ ] Performance Test~~
- [A] Cleanliness
- [A] Packaging
- ~~[ ] Code Form~~
- ~~[ ] Painting~~
- ~~[ ]~~

DEVIATION NOTICES AND REMARKS (ALL DEVIATIONS HAVE BEEN APPROVED BY THE RESPONSIBLE WESTINGHOUSE ENGINEER UNLESS A SPECIFIC EXCEPTION IS STATED.)

Several pieces for a certain heat no. noted above by alphanumeric designation.

THE SUPPLIER CERTIFIES that for the equipment and material released, all contractual requirements have been met. Approved deviations, if any, are listed above.

SUPPLIER SIGNATURE: [signature] DATE: 3/27/79
TITLE:

The equipment shown hereon is released by W Quality Assurance. Shipment may be made subject to authorization by W Purchasing.

The equipment supplier has certified that the equipment above meets all requirements of the purchase order, drawings and specifications. Westinghouse has reviewed evidence supporting this release and except as specified above has detected no deviations from such requirements. This release does not waive any rights Westinghouse may have under the purchase order including Westinghouse's right to reject the equipment upon discovery of any such deviations after arrival at destination.

K. R. Moran 3-27-79
Westinghouse Quality Assurance Representative

SUPPLIER (ATTACH TO SHIPPING PAPERS)

TOOLING
SPECIALISTS
INCORPORATED

MACHINE TOOL BUILDERS — SPECIAL MACHINING — DIES — ENGINEERING SERVICE

P. O. BOX 251, LATROBE, PA. 15650 Phone: (412) 539-2534

Letter of Compliance

March 27, 1979

This is a statement of compliance to the requirements of Westinghouse Purchase Order Number 544-XK-287369-RN.

All required processes, tests and inspections have been performed. Inspection data sheets, heat treat charts, weld wire and material certifications are attached as required by the Purchase Order.

A listing of Purchase Order items in this shipment is attached.

Documented evidence of compliance supporting this certification is available at Tooling Specialists.

Sincerely yours,

Thomas D Shearer

Thomas D. Shearer
Manager Special Products

TDS/sfz

Phone: (412) 539-2534

TOOLING SPECIALISTS INC.

P. O. Box 251
LATROBE, PENNSYLVANIA
15650

CONSIGNEE
Westinghouse Electric Corporation
Nuclear Energy Systems
PO Box 355
Pittsburgh, PA 15230

DATE March 28 1979

PURCHASE ORDER NO. 544-XK-287369-RN

NO. PIECES	DESCRIPTION
1	1½" Sch. 160
4	2" Sch. 160
2	3" Sch. 160
2	4" Sch. 160
2	6" Sch. 160
5	12" Sch. 140
6	14" Sch. 140
4	6" Sch. 405
5	8" Sch. 405
6	10" Sch. 40S
6	12" Sch. 40S
6	14" Sch. 40
6	16" Sch. 80S
5	8" Sch. 140
6	10" Sch. 140

Deliver to: Westinghouse Electric Corporation
Research Laboratories
Beulah Road
Pittsburgh, PA
~~Building 701/Shipping & Receiving~~
Call Phil Bukes when at Bldg. #256-5441

~~Order Complete~~

W. O. 21077

RECEIVED THE ABOVE Phillip C Bukes
RECEIVING CLERK

68

INSPECTION REPORT

Page _____ of _____

TOOLING SPECIALISTS, INC.
Latrobe, Pa. 15650
Phone: (412) 539-2534

Dwg. # 004 Rev. 4
P. O. #
Revision
Item
Work Order # 21-077

CUSTOMER:

W 004 Rev 4

PART DESCRIPTION:

14 Sch 40 H.T. 71771

IF OUT OF TOLERANCE, PLACE X IN BOX TO RIGHT OF DIMENSION.

DRAWING DIMENSIONS		Part No. A	X	Part No. B	X	Part No. C	X	Part No. D	X	Part No. E	X	Part No. F	X
Nom. Wall Thickness		.452		.452		.452		.449		.449		.451	
Cir. Notch	O.D.	.045		.045		.045		.045		.044		.045	
	I.D.	.045		.045		.045		.045		.044		.045	
Axial Notch	O.D.	.044		.045		.045		.045		.044		.045	
	I.D.	.044		.045		.045		.045		.044		.045	
A°		45°		45°		45°		45°		45°		45°	
Length		6"		6"		6"		6"		6"		6"	
1st Hole End, 3/32 dia.		.224		.225		.226		.225		.225		.225	
2nd Hole Side, 3/32 dia.		.225		.226		.225		.225		.226		.225	
	B	—		—		—		—		—		—	
	C	6°52'		6°52'		6°52'		6°52'		6°52'		6°52'	
	E	4°		4°		4°		4°		4°		4°	
	F	4°24'		4°24'		4°24'		4°24'		4°24'		4°24'	

INSPECTOR: Thomas Shearer

RECEIVING INSPECTOR:

W.D.S. 10 Rev. 7 03/18/79

NOM. PIPE SIZE"	SCHED ULE	NOM. WALL 'T'"	O.D."	HOLE DIAM ETER"	HOLES 1/4T	HOLES 1/2T	HOLES 3/4T	NOTCHES CIRC. O.D.	NOTCHES CIRC. I.D.	NOTCHES AXIAL O.D.	NOTCHES AXIAL I.D.	NOTCHES AXIAL Length"	NOM. ARC A°	B°	B" (O.D.)	C°	C" (O.D.)	E°	E"& F"	F°
14	40	.438	14	3/32	-	2	-	X	X	X	X	6	45	-	-	6.87	.839	4.09	.5	4.40

NOTE: Original dimensional requirements supplied to manufacturer.

General Data

1. E and F Dimension - minimum at bottom of notches (.500").
2. D Dimension - Typical all notches (10% of measured thickness) +.500" -.010".
3. A Dimension + to 360° and -.080" of arc.
4. Length +2" -.25".
5. Holes optional for T less than .8".
6. Flat blocks .8"T or less may contain 1/2T hole only.
7. Final acceptable dimensions to be based on intent.
8. Hole location to be based on actual "T".
9. Flat side of notches to be perpendicular notched surfaces, within 2°.
10. Side drilled holes to be within ± 1/32" tolerance.

Intent

1. C Dimension to be approximately 3/4" from edge of arc segment.
2. E and F dimension applicable to both sides of centerline so as to provide 1" long (at bottom) notches.
3. B Dimension to locate axial notches so as not to impose on end of hole at C location or on end of notches at centerline.
4. Circumferential reflectors to be positioned to allow 2T (Full Vee) calibration at 45° beam angle (not applicable for 1 1/2" Sch 80, 1 1/2" Sch 160, 2" Sch 80, 2" Sch 160, 3" Sch 40 & 3" Sch 80).
5. Circumferential holes and notches to be plus or minus .1" from ends.

92

Westinghouse #544XG266584-XN

CRUCIBLE INC—TRENT TUBE DIVISION

EAST TROY, WISCONSIN 53120

Stainless Steel Tubing

TT

CHANGE ORDER

CUSTOMER ORDER NO.	CFO DATE	RATING	CFO	LABOV DATE	SHIP	MARKS	MILL ORDER NO.
27-4590	09/09	X		9/23/	PPI	HB342-247	1C5-30434-1-1

5772 1 955565322 12 00 756127701 X

REF	01/0	SLS.	Y	INS.		LAB.	Y	SHP.	Y	INV.	Y	REF.		SLS.	INS.	LAB.	SHP.	INV.

TO BROS

Tioga Pipe

BROS TO

SPECIAL INSTRUCTIONS:

MARK ITEM 1 ITEM N 2573 B/M PAGE M 342

MARK ITEM 2 ITEM N 2574 B/M PAGE M 342

SHIPPING NOTICE

M.O. NUMBER 1C5-30434-1

1	14000 438 M00200000 03 12BS11 13 64.04 LBS./FT.	SOURCE			HEATS
	14.000IN X .438IN X 20FT RML	20	FT.	20.083	71771
	14IN SCH 40 FF A&P	1281	NET	1315	
	TRENTWELD TUBING		PCS.	1	
	A-358 TP316 CL 1 ES-5 REV 5	11/05/1	GROSS	1475	
	CUST. ITEM / CUST. CODE / OR. 316	12/17/1	1 Box C		
2	12750 406 M00150000 03 12BS11 13 53.98 LBS./FT.	SOURCE			HEATS
	12.750IN X .406IN X 15FT RML	15	FT.	15.083	71771
	12IN SCH 40 FF A&P	810	NET	835	
	TRENTWELD TUBING		PCS.	1	
	A-358 TP316 CL 1 ES-5 REV 5	11/05/1	GROSS	925	
	CUST. ITEM 2 / CUST. CODE / OR. 316	12/17/1	1 Box C		

93

[illegible] 920 [illegible]-447

MATERIAL Stainless Steel (205-20434-1-) ☒ WELDED ☐ SEAMLESS ☒ TUBING ☐ PIPE

CLASS	FINISH	CONDITION	TEMPER
Pressure	Annealed, Pickled and Passivated	Full Finished	

TESTS

PRESSURE-HYDRO	PRESSURE-AIR
#1 -- 1408 PSI, #2 -- 1408 PSI	

NONDESTRUCTIVE ELECTRIC TEST	CORROSION	ACIDIFIED COPPER SULPHATE	OXALIC	NITRIC	GRAIN SIZE

CHEMICAL ANALYSIS

C	Mn	P	S	Si	Ni	Cr	Mo	Ti	Cu	Co
Item #1 Heat No. 71771, Tube No 81K										
.048	1.62	.015	.011	.42	12.30	17.62	2.27		.26	.25
Check Analysis of Base Metal										
.060	1.60	.028	.010	.37	12.10	17.25	2.39			
Check Analysis of Weld Metal										
.023	1.74	.018	.010	.37	12.10	19.25				
Weldwire Filler Metal Analysis Heat #59871										
.062	1.58	.02	.02	.50	12.30	18.24				
Item #2 Heat No. 71771, Tube No. 82K										
.049	1.62	.016	.011	.42	12.30	17.62	2.27		.26	.25
Check Analysis of Base Metal										
[illegible]	.60	.023	.010	.37	12.10	17.25	2.39			
Check Analysis of Weld Metal										
.024	1.73	.018	.011	.41	12.23	19.29				
Weldwire Filler Metal Analysis Heat #59871										
.062	1.58	.02	.02	.50	12.30	18.24				

MECHANICAL TESTS

TENSILE STRENGTH PSI	YIELD STRENGTH PSI	ELONG. 2"	HARDNESS	FLARE	FLAT	REVERSE FLAT	REVERSE BEND	FLANGE
						Root Bend	Face Bend	
89,200	52,700	59%	B-77		OK	OK	OK	
Dye Penetrant Test -- OK								
Ultrasonic Test -- OK								
100% X-ray of Weld -- OK								
77,200	47,400	57%	B-76		OK	OK	OK	
Dye Penetrant Test -- OK								
Ultrasonic Test -- OK								
100% X-ray of Weld -- OK								

Corrected Copy to Show Check Analysis of Weld and Base Metal

SWORN TO AND SUBSCRIBED BEFORE ME

THIS 7th DAY OF January 1971

July 9, 1974
MY COMMISSION EXPIRES

THE TEST RESULTS SHOWN IN THIS REPORT ARE CORRECT TO THE BEST OF OUR KNOWLEDGE AND BELIEF.

CRUCIBLE STEEL COMPANY OF AMERICA
TRENT TUBE DIVISION

CERTIFIED BY: [signature]
REPRESENTATIVE

NEW YORK POWER AUTHORITY
INDIAN POINT NUCLEAR POWER PLANT
UNIT NO. 3
CALIBRATION BLOCKS

INDIAN POINT UNIT NO. 3 DESIGNATION	:	INT-9
COMPONENT/SYSTEM	:	REACTOR COOLANT FILTER
SIZE/SCHEDULE	:	14" SCH 10 .250"T
MATERIAL	:	SA312 TP304 STAINLESS STEEL
HEAT OR IDENTITY NUMBER	:	182

ASME SECTION V AND XI 1983 EDITION THROUGH SUMMER 1983 ADDENDA REQUIREMENTS:

1. Section V : T-110 and T-548
2. Section XI : Article III-1100, Supplement 7 and IMA-2250
3. Material : TP304 Stainless Steel
4. Size/Schedule: 14" - .250"T

WESTINGHOUSE ELECTRIC CORPORATION - NSID - INSPECTION SERVICE DESIGN:

Calibration block was designed to meet intent of ASME Boiler and Pressure Vessel Code Section XI 1974 Edition through Summer 1975 Addenda.

RECOMMENDATION:

Calibration block design follows the quidelines of Section V and Section XI 1983 Edition through Summer 1983 Addenda for Austenitic Piping. Modifications of this design to meet the requirements of Section V and XI - 1983 Edition through Summer 1983 Edition for calibration blocks for "ferritic piping and design T-547.1" would be to increase length to 8", arc length to 70° and add I.D. circumferential notch.

NOTES:

1. WHEN MEASURED FROM EITHER SIDE OF CENTERLINE MINIMUM LENGTH AT BOTTOM OF AXIAL NOTCHES TO BE 0.5" AS SHOWN IN SIDE VIEW.
2. NOTCH DEPTH 10% OF MEASURED THICKNESS +0.005"-0.010".
3. PREP ALLOWED IN AREA OF SIDE DRILLED HOLE SHALL NOT INFRINGE ON HOLE SIZE REQUIREMENTS.
4. CIRCUMFERENTIAL HOLES AND NOTCHES TO BE PLUS OR MINUS 0.1" FROM ENDS.
5. LOCATE AXIAL NOTCHES SO AS NOT TO IMPOSE ON END OF HOLES OR ON END OF NOTCHES AT CENTERLINE.
6. FLAT SIDE OF NOTCHES TO BE PERPENDICULAR NOTCHED SURFACES, WITHIN 2°.
7. HOLE LOCATION TO BE BASED ON ACTUAL "T".
8. SIDE DRILLED HOLE DIAMETER TOLERANCE TO BE WITHIN ±0.03"
9. DRILL HOLES PERPENDICULAR TO RADIUS.
10. ARC DIMENSION +360° AND 0.080".
11. LENGTH TOLERANCE TO BE +2.00"-0.25"

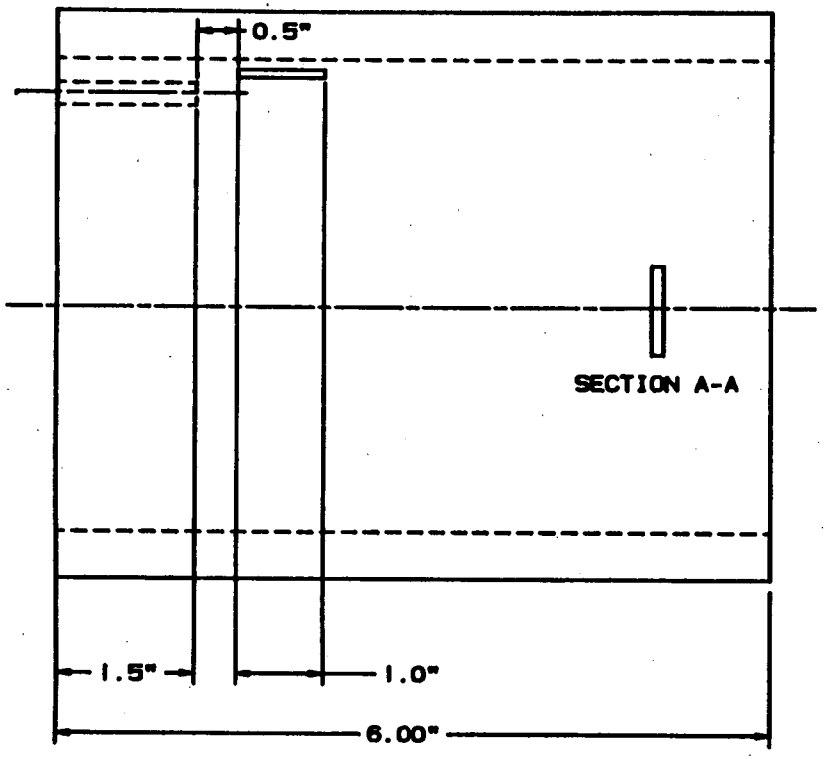

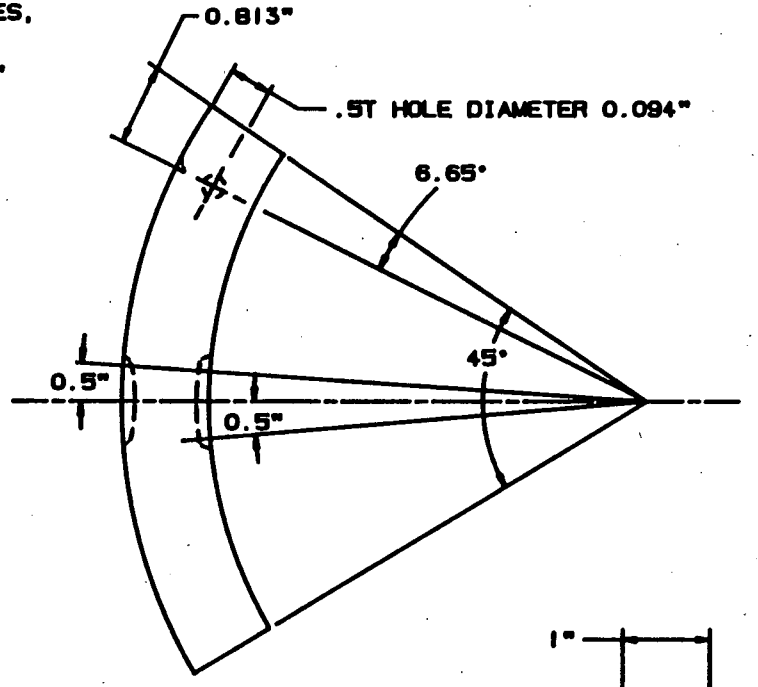

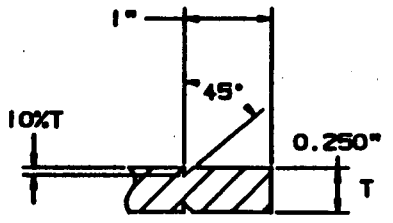

SECTION A-A

COMPUTER SYSTEM PLANT MODELING

NEED TECHNICAL APPROVAL Phillip C. Burkes	11-20-86	Westinghouse Electric Corporation PLANT ENGINEERING DIVISION - PITTSBURGH, PA
LEVEL III REVIEW David Kunk	11-20-86	TITLE CALIBRATION BLOCK INT-9 REACTOR COOLANT FILTER 14" SCH 10 .250"T-E SA312 TP304 STAINLESS STEEL HEAT NO.: 182
		C DW. NO. REV.

NSD PA1010

Nuclear Service Division
QUALITY RELEASE

QR- 1623 REV. 0

PURCHASE ORDER	PART NAME	DRAWING & REV
294103	Calibration Blocks	W003 Rev3, W004 Rev4, W005 Rev5, W006 Rev6, W007 Rev1.

PAR NO.	CHG. NOTICE NO.	P.O. ITEM NO.	PROJ./S.O. NO.	QTY. ON ORDER	QTY. RELEASED
0	1	1 thru 6, 8 thru 15	WISN-9327/IPBN-9327	65	59

SUPPLIER	E. SPEC. & REV.	ORDER
Tooling Specialists	N/A	COMPLETE ☐ YES ☑ NO

SERIAL OR IDENTIFICATION NOS.

HT#: 30106 (6 pieces), NNN7B (A thru F), N7212 (A & B), 182 (A thru H), 8051726 (A thru H), M9948 (A thru D), 2626-8-1 (A thru E), 245865 (A thru H), 534982 (A thru F), 2633-13-1 (A thru F).

The equipment shown hereon is released by W Quality Assurance. Shipment may be made subject to authorization by W Purchasing. In the Audit Checklist below, an A indicates acceptability, a C indicates a contingency and a W indicates that W QA has waived the auditing or witnessing of the attribute. All non-applicable items are lined out.

AUDIT CHECKLIST

☑ A Material Certifications	~~☐ Non-Operating Electrical Tests~~
~~☐ Heat Treat Records~~	~~☐ Operating Electrical Test~~
~~☐ RT Film and Records~~	~~☐ Pressure Test~~
~~☐ PT/MT Records~~	~~☐ Seat Tightness Test~~
☑ A Visual	~~☐ Performance Test~~
☑ A Dimensional	☑ A Cleanliness
~~☐ UT Records~~	☑ W Packaging
~~☐ Personnel Qualification: Welding, NDT~~	~~☐ Code Form~~
~~☐~~	~~☐ Painting~~
~~☐~~	☑ A C.of C.

DEVIATION NOTICES AND REMARKS (ALL DEVIATIONS HAVE BEEN APPROVED BY THE RESPONSIBLE WESTINGHOUSE ENGINEER UNLESS A SPECIFIC EXCEPTION IS STATED.)

Six of the above blocks to be shipped to IPP.
s/N's: IPP-8, IPP-11, IPP-27, IPP-34, IPP-35, IPP-36.

THE SUPPLIER CERTIFIES that for the equipment and material released, all contractual requirements have been met. Approved deviations, if any, are listed above.

SUPPLIER SIGNATURE: Thomas Strawn DATE: 6/29/79
TITLE:

The equipment shown hereon is released by Quality Assurance. Shipment may be made subject to authorization by Purchasing.

The equipment supplier has certified that the equipment above meets all requirements of the purchase order, drawings and specifications. Westinghouse has reviewed evidence supporting this release and except as specified above has detected no deviations from such requirements. This release does not waive any rights Westinghouse may have under the purchase order including Westinghouse's right to reject the equipment upon discovery of any such deviations after arrival at destination.

K.R. Moore 6-29-79
Westinghouse Quality Assurance Representative

L3

REQUISITIONER

TOOLING
SPECIALISTS
INCORPORATED

MACHINE TOOL BUILDERS — SPECIAL MACHINING — DIES — ENGINEERING SERVICE

P. O. BOX 251, LATROBE, PA. 15650 Phone: (412) 539-2534

LETTER OF COMPLIANCE

June 29, 1979

This is a statement of compliance to the requirements of Westinghouse Purchase Order Number 544-MXK-294103-RN.

All required processes, tests, and inspections have been performed. Inspection data sheets, heat treat charts, weld wire and material certifications are attached as required by the Purchase Order.

A listing of Purchase Order items in this shipment is attached.

Documented evidence of compliance supporting this certification is available at Tooling Specialists.

Sincerely yours,

Thomas D. Shearer

Thomas D. Shearer
Manager Special Products

TDS:keo

2" Sch 160 Material has not been received yet

INSPECTION REPORT

Page _____ of _____

TOOLING SPECIALISTS, INC.
Latrobe, Pa. 15650
Phone: (412) 539-2534

Dwg. #

Revision

Item

P. O. #

Work Order # 21-235

CUSTOMER:

ART DESCRIPTION:
14 Sch 10 Ht" 182

IF OUT OF TOLERANCE, PLACE X IN BOX TO RIGHT OF DIMENSION.

DRAWING DIMENSIONS	A	B	Part No. C X	Part No. D X	Part No. E X	Part No. F X	Part No. G X	Part No. H X
Nom wall	.238	.240	.241	.242	.243	.244	.240	.238
Cir. Notch OD	.023	.024	.024	.024	.024	.024	.024	.024
ID	.024	.024	.024	.024	.024	.024	.024	.024
Axial OD	.024	.024	.024	.024	.024	.024	.024	.024
Length	6.180	6.180	6.180	6.180	6.180	6.180	6.180	6.180
A°	45°	45°	45°	45°	45°	45°	45°	45°
1/2T End	.119	.120	.121	.121	.121	.121	.121	.119
hole dia.	3/32	3/32	3/32	3/32	3/32	3/32	3/32	3/32
C	6°39'	6°39'	6°39'	6°39'	6°39'	6°39'	6°39'	6°39'
E	4°	4°	4°	4°	4°	4°	4°	4°
F	4°15'	4°15'	4°15'	4°15'	4°15'	4°15'	4°15'	4°15'

INSPECTOR: Thomas Shearer

RECEIVING INSPECTOR:

NOM. PIPE SIZE"	SCHED ULE	NOM. WALL 'T'"	O.D."	HOLE DIAM ETER"	HOLES 1/4T	HOLES 1/2T	HOLES 3/4T	NOTCHES CIRC. O.D.	NOTCHES CIRC. I.D.	NOTCHES AXIAL O.D.	NOTCHES AXIAL I.D.	NOTCHES Length"	NOM. ARC A°	B°	B" (O.D.)	C°	C" (O.D.)	E°	E"& F"	F°
14	10	.250	14	3/32	-	1	-	X	X	X	-	6	45	-	-	6.65	.813	4.09	.5	4.26

NOTE: Original dimensional requirements supplied to manufacturer.

General Data

1. E and F Dimension - minimum at bottom of notches (.500").
2. D Dimension - Typical all notches (10% of measured thickness) +.500" -.010".
3. A Dimension + to 360° and -.080" of arc.
4. Length +2" -.25".
5. Holes optional for T less than .8".
6. Flat blocks .8"T or less may contain 1/2T hole only.
7. Final acceptable dimensions to be based on intent.
8. Hole location to be based on actual "T".
9. Flat side of notches to be perpendicular notched surfaces, within 2°.
10. Side drilled holes to be within ± 1/32" tolerance.

Intent

1. C Dimension to be approximately 3/4" from edge of arc segment.
2. E and F dimension applicable to both sides of centerline so as to provide 1" long (at bottom) notches.
3. B Dimension to locate axial notches so as not to impose on end of hole at C location or on end of notches at centerline.
4. Circumferential reflectors to be positioned to allow 2T (Full Vee) calibration at 45° beam angle (not applicable for 1 1/2" Sch 80, 1 1/2" Sch 160, 2" Sch 80, 2" Sch 160, 3" Sch 40 & 3" Sch 80).
5. Circumferential holes and notches to be plus or minus .1" from ends.

14" S/10 TT-304

TEST REPORT

SWEPCO TUBE CORPORATION

Swepco

ONE CLIFTON BOULEVARD • CLIFTON, NEW JERSEY 07015

SOLD TO: Capitol Pipe & Steel Prod.
P.O. Box 36431
Houston, Texas

SHIP TO:

DATE: Dec. 19, 1974

(201) 778-3000
TWX NO. 710-989-7098
TELEX NO. 133321

SWEPCO JOB NO. K-3050.4

DISTRIBUTOR P.O. NO. 67231.30

CUSTOMER P.O. NO.

BASE METAL HEAT NO. 182

WELD WIRE HEAT NO.

PRODUCT DESCRIPTION:
SWEPCO FF GRADE PIPE, T-304, TO ASME SA-312, ANNEALED & PICKLED

SWEPCO PC. NOS. 11 Pcs.

SIZE 14" O.D. X .250" W X 20' R/L

CUST. SERIAL NO.

CHEMICAL ANALYSIS

	C	Mn	P	S	Si	Ni	Cr.	Mo	Co	Cu
LADLE ANALYSIS	.072	1.80	.024	.012	.62	8.40	18.40		.23	
CHECK ANALYSIS BASE METAL	.051	1.68	.0289	.0145	.47	8.70	18.15			
CHECK ANALYSIS ~~WELD DEPOSIT~~ BASE METAL	.058	1.62	.0286	.0118	.45	8.60	18.20			
WELD WIRE ANALYSIS										
WELD WIRE ANALYSIS										

MECHANICAL TESTS

	HARD	YIELD P.S.I.	TENSILE P.S.I.	% ELONG. IN 2"	ROOT BEND	FACE BEND	REV. BEND	FLAT	GRAIN SIZE
BASE METAL	BHN 146	38000	86000	60.0					
PIPE WELD - TRANSVERSE		40200	83300	63.0				OK	
PIPE WELD - TRANSVERSE		39900	81500	54.0				OK	
PIPE WELD - TRANSVERSE		37400	80300	62.0				OK	
PIPE WELD - TRANSVERSE									

EXAMINATIONS

	RADIOGRAPHY	ULTRASONIC	LIQUID PEN.	HYDRO	P.S.I.
APPLICABLE SPECS.				ASME SA-312	535
RESULTS					O/L

CERTIFICATION/REMARKS

Tooling Spec.
R9-1245A
H96792
0351

HEAT TREATMENT

SOLUTION ANNEAL @ 2000 °F
FOR 30 MINUTES MIN.
~~AIR COOL - WATER QUENCH~~
FORCED AIR COOL

Sworn to and subscribed to before me this 17th day of Jan. 1975

John Hedley
NOTARY PUBLIC OF NEW JERSEY
My Commission Expires March 28, 1978

I hereby certify these tests are correct to the best of my knowledge and belief.

SWEPCO TUBE CORPORATION

August Olsen

NEW YORK POWER AUTHORITY
INDIAN POINT NUCLEAR POWER PLANT
UNIT NO. 3
CALIBRATION BLOCKS

INDIAN POINT UNIT NO. 3
DESIGNATION : INT-10

COMPONENT/SYSTEM : 12" SCH 80 MAINSTEAM PIPING

SIZE/SCHEDULE : 12" SCH 80 .688"T

MATERIAL : A106 GRADE B CARBON STEEL

HEAT OR IDENTITY NUMBER : N13396

ASME SECTION V AND XI 1983 EDITION THROUGH SUMMER 1983 ADDENDA REQUIREMENTS:

1. Section V : T-547
2. Section XI : III-3400
3. Material : A155 Grade KCF 70 Class 1 Carbon Steel
4. Size/Schedule: 12" SCH 80 .688"T

WESTINGHOUSE ELECTRIC CORPORATION - NSID - INSPECTION SERVICE DESIGN:

Calibration block was designed to meet intent of ASME Boiler and Pressure Vessel Code Section XI 1974 Edition through Summer 1975 Addenda.

RECOMMENDATION:

Calibration block follows the design and requirements for Section V and Section XI of the 1983 Edition through Summer 1983 Addenda except for arc length of 80° instead of 45° as required by Figure T-547.1 and notch depth to 0.104T - 0.009T squared with tolerance of +10%-20% as required by Table III-3430-1. P-Number Groupings for Materials A106 Grade B Carbon Steel and A155 Grade KCF 70 Class 1 Carbon Steel are equivalent.

NOTES:

1. WHEN MEASURED FROM EITHER SIDE OF CENTERLINE MINIMUM LENGTH AT BOTTOM OF AXIAL NOTCHES TO BE 0.5" AS SHOWN IN SIDE VIEW.
2. NOTCH DEPTH 10% OF MEASURED THICKNESS +0.005"-0.010".
3. PREP ALLOWED IN AREA OF SIDE DRILLED HOLE SHALL NOT INFRINGE ON HOLE SIZE REQUIREMENTS.
4. CIRCUMFERENTIAL HOLES AND NOTCHES TO BE PLUS OR MINUS 0.1" FROM ENDS.
5. LOCATE AXIAL NOTCHES SO AS NOT TO IMPOSE ON END OF HOLES OR ON END OF NOTCHES AT CENTERLINE.
6. FLAT SIDE OF NOTCHES TO BE PERPENDICULAR NOTCHED SURFACES, WITHIN 2°.
7. HOLE LOCATION TO BE BASED ON ACTUAL "T".
8. SIDE DRILLED HOLE DIAMETER TOLERANCE TO BE WITHIN ±0.03"
9. DRILL HOLES PERPENDICULAR TO RADIUS.
10. ARC DIMENSION +360° AND -0.080".
11. LENGTH TOLERANCE TO BE +2.00"-0.25"

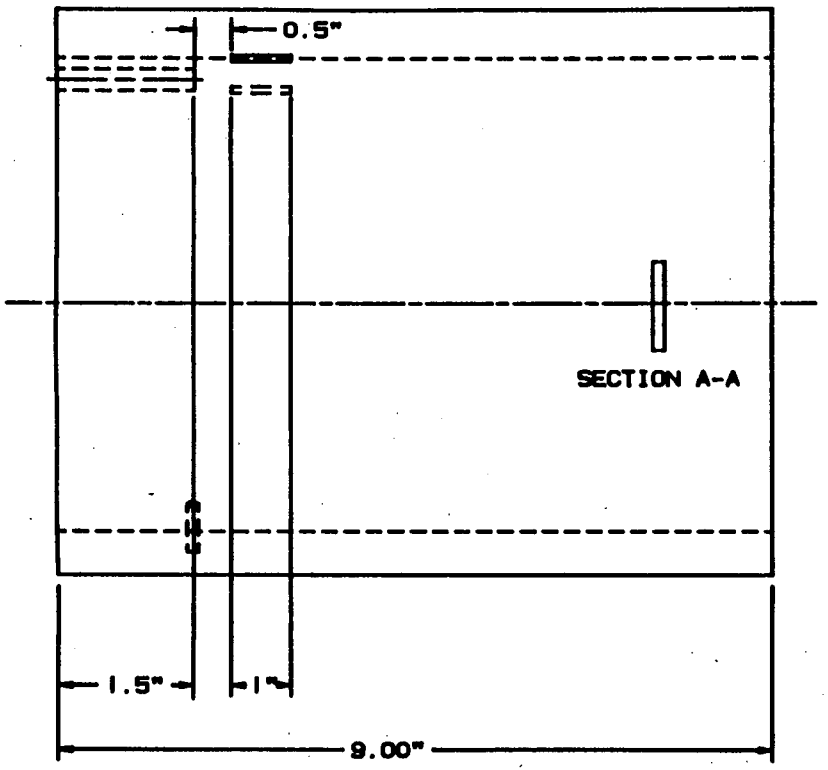

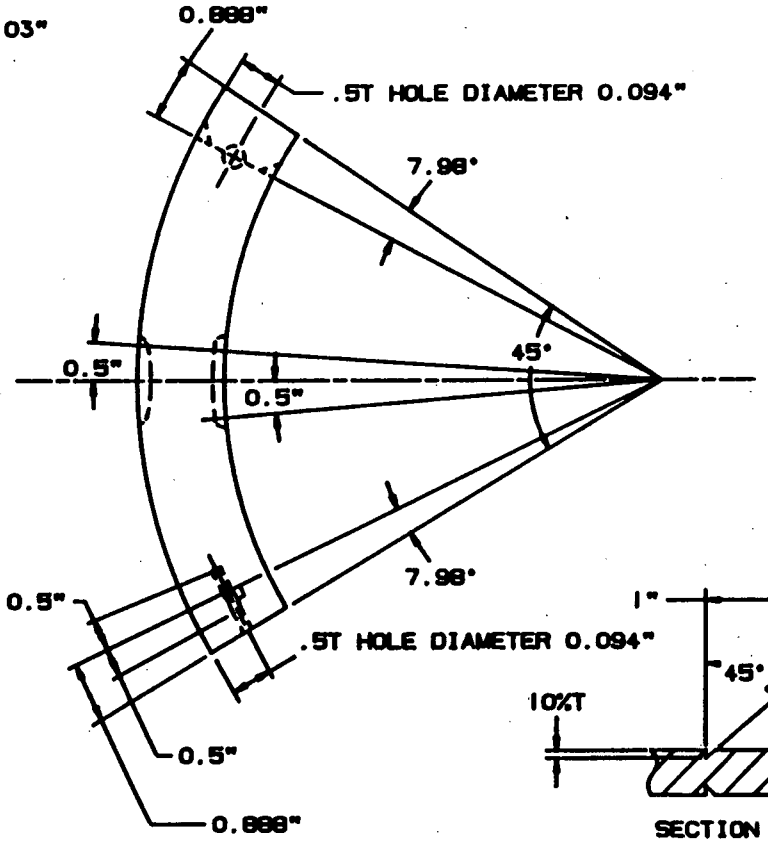

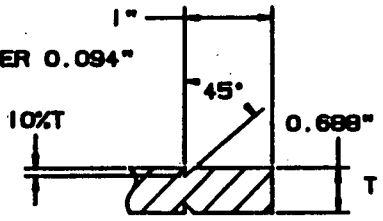

SECTION A-A

COMPUTER SYSTEM PLANT MODELING

NSSS TECHNICAL APPROVAL Phillip E. Burkes	11-20-86	Westinghouse Electric Corporation PLANT ENGINEERING DIVISION - PITTSBURGH, PA
LEVEL III REVIEW David Funk	11-20-86	TITLE CALIBRATION BLOCK INT-10 12" SCH 80 MAINSTEAM PIPING 12" SCH 80 .688"T-F A106 GRADE B CARBON STEEL HEAT NO.: N13396
ENG		
ENG		
MER		SIZE C DR. NO. REV.

REVISION

Nuclear Service Division

QUALITY RELEASE

QR- 1719 REV. O

PURCHASE ORDER	PART NAME	DRAWING & REV.
406203	UT Calibration Blocks	6003 Rev 3, 6004 Rev 4

PAR NO.	CHG. NOTICE NO.	P.O. ITEM NO.	PROJ./S.O. NO.	QTY. ON ORDER	QTY. RELEASED
0	1	1 thru 6	JPPN-9327	42	41

SUPPLIER	E. SPEC. & REV.	ORDER
T Log Specialists	N/A	COMPLETE ☑ YES ☐ NO.

SERIAL OR IDENTIFICATION NOS.

HT 214609 (A thru H), 152177 (A thru F), N13396 (A thru H), M2458 (A thru H), 103914 (B thru H), 05369 (A thru D).

The equipment shown hereon is released by W Quality Assurance. Shipment may be made subject to authorization by W Purchasing. In the Audit Checklist below, an A indicates acceptability, a C indicates a contingency and a W indicates that W QA has waived the auditing or witnessing of the attribute. All non-applicable items are lined out.

AUDIT CHECKLIST

☑ A Material Certifications	~~Non-Operating Electrical Test~~
~~Heat Treat Records~~	~~Operating Electrical Test~~
~~RT Film and Records~~	~~Pressure Test~~
~~PT/MT Records~~	~~Gas Tightness Test~~
☑ A Visual	~~Performance Test~~
☑ A Dimensional	☑ A Cleanliness
~~UT Records~~	☑ W Packaging
~~Personnel Qualification: Welding, NDT~~	~~Code Form~~
	~~Painting~~
	☑ A P.O.C.

DEVIATION NOTICES AND REMARKS (ALL DEVIATIONS HAVE BEEN APPROVED BY THE RESPONSIBLE WESTINGHOUSE ENGINEER UNLESS A SPECIFIC EXCEPTION IS STATED.)

THE SUPPLIER CERTIFIES that for the equipment and material released, all contractual requirements have been met. Approved deviations, if any, are listed above.

SUPPLIER SIGNATURE DATE

TITLE

The equipment shown hereon is released by W Quality Assurance. Shipment may be made subject to authorization by W Purchasing.

The equipment supplier has certified that the equipment above meets all requirements of the purchase order, drawings and specifications. Westinghouse has reviewed evidence supporting this release and except as specified above has detected no deviations from such requirements. This release does not waive any rights Westinghouse may have under the purchase order including Westinghouse's right to reject the equipment upon discovery of any such deviations after arrival at destination.

N R Moore 7.19.74

Westinghouse Quality Assurance Representative

SUPPLIER (ATTACH TO SHIPPING PAPERS)

TOOLING
SPECIALISTS
INCORPORATED

MACHINE TOOL BUILDERS — SPECIAL MACHINING — DIES — ENGINEERING SERVICE

P. O. BOX 251, LATROBE, PA. 15650 Phone: (412) 539-2534

LETTER OF COMPLIANCE

July 18, 1979

This is a statement of compliance to the requirements of Westinghouse Purchase Order Number 544-MXK-406203-RN.

All required processes, tests, and inspections have been performed. Inspection data sheets, heat treat charts, weld wire and material certifications are attached as required by the Purchase Order.

A listing of Purchase Order items in this shipment is attached.

Documented evidence of compliance supporting this certification is available at Tooling Specialists, Inc.

Sincerely yours,

Thomas D. Shearer

Thomas D. Shearer
Manager Special Products

TDS/sfz

INSPECTION REPORT

Page _____ of _____

TOOLING SPECIALISTS, INC.
Latrobe, Pa. 15650
Phone: (412) 539-2534

Dwg. #

P. O. #

Revision | Item

Work Order # 21-344

CUSTOMER:

PART DESCRIPTION:
12 Sch 80 Ht. N13396

IF OUT OF TOLERANCE, PLACE X IN BOX TO RIGHT OF DIMENSION.

DRAWING DIMENSIONS		A	B	Part No. C X	Part No. D X	Part No. E X	Part No. F X	Part No. G X	Part No. H
Nom wall thickness		.688	.710	.708	.694	.694	.664	.650	.671
Cir Notch	OD	.068	.071	.070	.069	.069	.064	.065	.067
	ID	.068	.071	.070	.069	.069	.064	.065	.067
Axial	OD	.066	.069	.070	.069	.069	.068	.065	.065
	ID	.066	.069	.070	.069	.069	.068	.065	.065
Length		8.950	8.950	8.950	8.950	8.950	8.950	8.950	8.950
A°		45°	45°	45°	45°	45°	45°	45°	45°
1/16 dia.		3/32	3/32	3/32	3/32	3/32	3/32	3/32	3/32
1/2 T hole, end		.335	.350	.353	.349	.344	.340	.330	.331
1/2 T hole, side		.347	.350	.351	.348	.347	.333	.327	.337
	C	7°59'	7°59'	7°59'	7°59'	7°59'	7°59'	7°59'	7°59'
	E	4°29'	4°29'	4°29'	4°29'	4°29'	4°29'	4°29'	4°29'
	F	5°7'	5°7'	5°7'	5°7'	5°7'	5°7'	5°7'	5°7'

INSPECTOR: Thomas D. Shear

RECEIVING INSPECTOR:

W.D.S. 10 Rev. 7 03/18/79

NOM. PIPE SIZE"	SCHED ULE	NOM. WALL 'T'"	O.D."	HOLE DIAM ETER"	HOLES 1/4T	1/2T	3/4T	NOTCHES CIRC. O.D.	CIRC. I.D.	AXIAL O.D.	AXIAL I.D.	Length"	NOM. ARC A°	B°	B" (O.D.)	C°	C" (O.D.)	E°	E"& F"	F°
12	80	.688	12.75	3/32	-	2	-	X	X	X	X	9	45	-	-	7.98	.888	4.49	.5	5.12

NOTE: Original dimensional requirements supplied to manufacturer.

General Data

1. E and F Dimension - minimum at bottom of notches (.500").
2. D Dimension - Typical all notches (10% of measured thickness) +.500" -.010".
3. A Dimension + to 360° and -.080" of arc.
4. Length +2" -.25".
5. Holes optional for T less than .8".
6. Flat blocks .8"T or less may contain 1/2T hole only.
7. Final acceptable dimensions to be based on intent.
8. Hole location to be based on actual "T".
9. Flat side of notches to be perpendicular notched surfaces, within 2°.
10. Side drilled holes to be within ± 1/32" tolerance.

Intent

1. C Dimension to be approximately 3/4" from edge of arc segment.
2. E and F dimension applicable to both sides of centerline so as to provide 1" long (at bottom) notches.
3. B Dimension to locate axial notches so as not to impose on end of hole at C location or on end of notches at centerline.
4. Circumferential reflectors to be positioned to allow 2T (Full Vee) calibration at 45° beam angle (not applicable for 1 1/2" Sch 80, 1 1/2" Sch 160, 2" Sch 80, 2" Sch 160, 3" Sch 40 & 3" Sch 80).
5. Circumferential holes and notches to be plus or minus .1" from ends.

72-801 A106-B

United States Steel Corporation

LORAIN WORKS

STANDARD CERTIFIED TEST REPORT
TUBULAR PRODUCTS

9-4-75 DATE

MATERIAL: Sm/s.

GRADE: B ASTM A106 & ASME SA106

DEPARTMENT: ATTN MRS. MARLENE STALMA

CUSTOMER'S ORDER NO.: 75795-RS

CUSTOMER NAME: CAPITOL PIPE + STEEL PRODUCTS INC.

U.S. STEEL ORDER NO.: LF 98615

ADDRESS: 730 SUPERIOR AVE.

INVOICE NO.: 355-25266

CITY AND STATE: CARNEGIE, PA. 15106

ORDER ITEM	CODE OR LOT NO.	SIZE O. D.	WT/FT OR WALL THICKNESS		HEAT NUMBER	SIG. HYDRO. TEST PRESSURE P.S.I.	MECHANICAL PROPERTIES: YIELD STRENGTH P.S.I. / POINT	TENSILE STRENGTH P.S.I.	ELONG. IN 2" %	CHEMICAL ANALYSIS (%): C	Mn	P	S	Si	Mo	
1		12 3/4	.688	N13396	2800	39800	70800	39.0		.25	.59	.009	.018	.14		CK.
										.25	.61	.010	.016	.14		L.

FLATTENING TEST OK

MATERIAL STENCILED - N133961
IS A PRODUCT OF HEAT - N13296

Tooling Specialists
0616
R9-1444A
P46845

FT 4 REV. 369
S CAT. NO. 837200
1.003.0241

We hereby certify that the above figures are correct, as contained in the records of the company

E. L. Bartolotta

NEW YORK POWER AUTHORITY
INDIAN POINT NUCLEAR POWER PLANT
UNIT NO. 3
CALIBRATION BLOCKS

INDIAN POINT UNIT NO. 3 DESIGNATION	:	INT-11
COMPONENT/SYSTEM	:	12" SCH 40S RHR PIPING
SIZE/SCHEDULE	:	12" SCH 40S .375"T
MATERIAL	:	A312 TP316 STAINLESS STEEL
HEAT OR IDENTITY NUMBER	:	8052221

ASME SECTION V AND XI 1983 EDITION THROUGH SUMMER 1983 ADDENDA REQUIREMENTS:

1. Section V : T-110 and T-548
2. Section XI : Article III-1100, Supplement 7 and IMA-2250
3. Material : A358 TP304 Stainless Steel
4. Size/Schedule: 12" SCH 40S .375"T

WESTINGHOUSE ELECTRIC CORPORATION - NSID - INSPECTION SERVICE DESIGN:

Calibration block was designed to meet intent of ASME Boiler and Pressure Vessel Code Section XI 1974 Edition through Summer 1975 Addenda.

RECOMMENDATION:

Calibration block design follows the guidelines of Section V and Section XI 1983 Edition through Summer 1983 for Austenitic Piping. Class 2 Piping less than or equal to 1/2 inch thickness no longer requires Volumetric examination per the requirements of Section XI 1983 Edition thru Summer 1983 Addenda. Modifications of this design to meet the requirements of Section V and XI - 1983 Edition through Summer 1983 Addenda for calibration blocks for "ferritic piping and design T-547.1" would be to increase length to 8" and arc length to 80° and add I. D. circumferential notch and as required by Table III-3430-1 notch depth to 0.104T - 0.009T squared with tolerance of +10%-20%. P-Number Groupings for Materials A312 TP316 Stainless Steel and A358 TP304 Stainless Steel are equivalent.

NOTES:

1. WHEN MEASURED FROM EITHER SIDE OF CENTERLINE MINIMUM LENGTH AT BOTTOM OF AXIAL NOTCHES TO BE 0.5" AS SHOWN IN SIDE VIEW.
2. NOTCH DEPTH 10% OF MEASURED THICKNESS +0.005"-0.010".
3. PREP ALLOWED IN AREA OF SIDE DRILLED HOLE SHALL NOT INFRINGE ON HOLE SIZE REQUIREMENTS.
4. CIRCUMFERENTIAL HOLES AND NOTCHES TO BE PLUS OR MINUS 0.1" FROM ENDS.
5. LOCATE AXIAL NOTCHES SO AS NOT TO IMPOSE ON END OF HOLES OR ON END OF NOTCHES AT CENTERLINE.
6. FLAT SIDE OF NOTCHES TO BE PERPENDICULAR NOTCHED SURFACES, WITHIN 2°.
7. HOLE LOCATION TO BE BASED ON ACTUAL "T".
8. SIDE DRILLED HOLE DIAMETER TOLERANCE TO BE WITHIN ±0.03"
9. DRILL HOLES PERPENDICULAR TO RADIUS.
10. ARC DIMENSION +360° AND 0.080".
11. LENGTH TOLERANCE TO BE +2.00"-0.25"

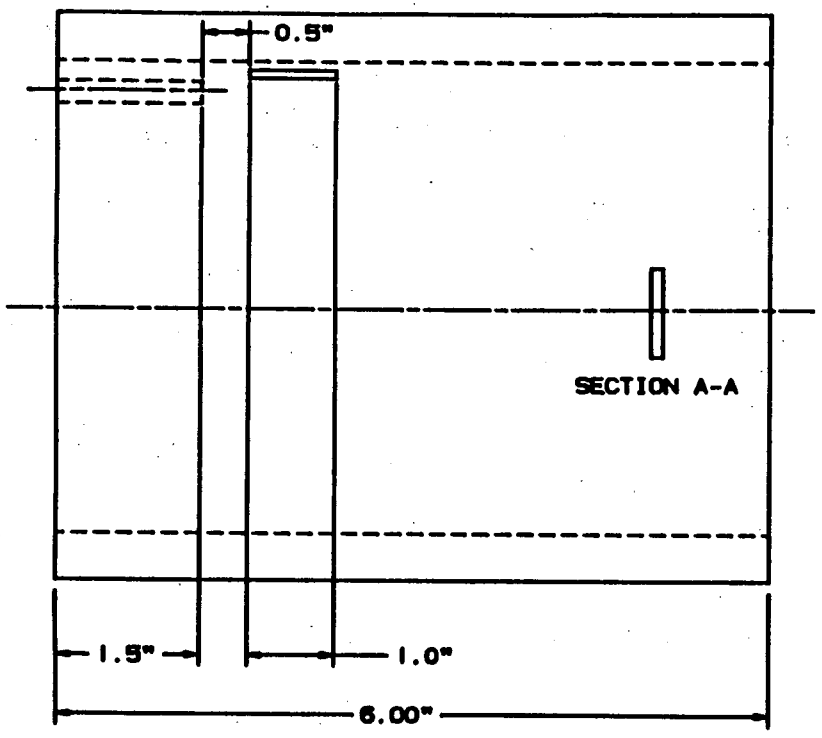

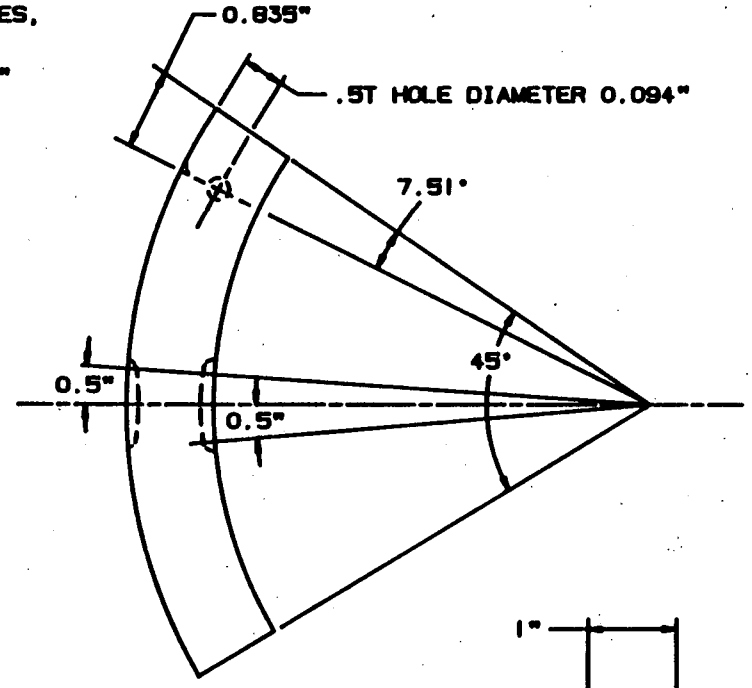

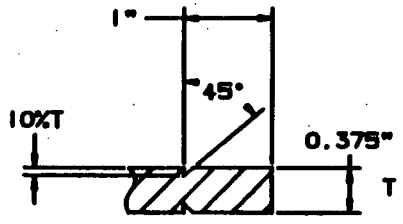

SECTION A-A

COMPUTER SYSTEM PLANT MODELING

NSSS TECHNICAL APPROVAL Philip C. Burke	11-20-86	Westinghouse Electric Corporation PLANT ENGINEERING DIVISION - PITTSBURGH, PA
LEVEL III REVIEW David Kent	11-20-86	TITLE CALIBRATION BLOCK INT-11 12" SCH 40S RHR PIPING 12" SCH 40S .375"T-A A312 TP316 STAINLESS STEEL HEAT NO.: 8052221
		C DWG. NO. REV.

NSD PA1010

Nuclear Service Division
QUALITY RELEASE

QR- 1921 REV. O

PURCHASE ORDER	PART NAME	DRAWING & REV.
410650	UT CALIBRATION BLOCKS	4003 REV 3, 4004 REV 4, 4005 REV 5

PAR NO.	CHG. NOTICE NO.	P.O. ITEM NO.	PROJ./S.O. NO.	QTY. ON ORDER	QTY. RELEASED
0	0	1 THRU 6	INSN-9327	93	12

SUPPLIER	E. SPEC. & REV.	ORDER
TOOLING SPECIALISTS	N/A	COMPLETE ☐ YES ☒ NO

SERIAL OR IDENTIFICATION NOS.

(1) 12" SCH 160 (HT # 28722) / (6) 10" SCH 120 (HT # 6-448)
(1) 12" SCH 40S (HT # 805222-1) / (1) 10" SCH 40S (HT # 1971-12-1-2)
(1) 10" SCH 140 (HT # 061232) / (2) 4" SCH 160 (HT # 01038)

The equipment shown hereon is released by W Quality Assurance. Shipment may be made subject to authorization by W Purchasing. In the Audit Checklist below, an A indicates acceptability, a C indicates a contingency and a W indicates that W QA has waived the auditing or witnessing of the attribute. All non-applicable items are lined out.

AUDIT CHECKLIST

- [A] Material Certifications — SUPPLIED BY WNSD
- [ ] ~~Heat Treat Records~~
- [ ] ~~RT Film and Records~~
- [ ] ~~PT/MT Records~~
- [A] Visual
- [A] Dimensional
- [ ] ~~UT Records~~
- [ ] ~~Personnel Qualification: Welding, NDT~~
- [ ] ~~~~
- [ ] ~~~~
- [ ] ~~Non-Operating Electrical Tests~~
- [ ] ~~Operating Electrical Test~~
- [ ] ~~Pressure Test~~
- [ ] ~~Seat Tightness Test~~
- [ ] ~~Performance Test~~
- [A] Cleanliness
- [W] Packaging
- [ ] ~~Code Form~~
- [ ] ~~Painting~~
- [A] CERT. OF CONF.

DEVIATION NOTICES AND REMARKS (ALL DEVIATIONS HAVE BEEN APPROVED BY THE RESPONSIBLE WESTINGHOUSE ENGINEER UNLESS A SPECIFIC EXCEPTION IS STATED.)

THE SUPPLIER CERTIFIES that for the equipment and material released, all contractual requirements have been met. Approved deviations, if any, are listed above.

SUPPLIER SIGNATURE: Jimmy D. Sheem DATE: 7/29/80
TITLE:

The equipment shown hereon is released by Ⓦ Quality Assurance. Shipment may be made subject to authorization by Ⓦ Purchasing.

The equipment supplier has certified that the equipment above meets all requirements of the purchase order, drawings and specifications. Westinghouse has reviewed evidence supporting this release and except as specified above has detected no deviations from such requirements. This release does not waive any rights Westinghouse may have under the purchase order including Westinghouse's right to reject the equipment upon discovery of any such deviations after arrival at destination.

K.R. Moran 5-8-80
Westinghouse Quality Assurance Representative

REQUISITIONER

Tooling Specialists, Inc.
Certification Letter of Compliance

To: (a) NES
P.O Box 355
Pittsburgh Pa 15230

Date: 7/29/80

Tooling Specialists, Inc. certifies that all purchase order requirements have been met for the following equipment and material. Any deviations from the order requirements have had Westinghouse NSD approval prior to shipment. Deviation Notice (D/N) numbers applicable are NA (N/A if not applicable).

Westinghouse Purchase Order Number 514-MXK-410650
P.O. Change Notice number(s) 00
Procurement Advisory Release (PAR) number(s) 00

P.O. Item #	Dwg. or Sketch and Rev. #	Base Mat'l & Heat #	Weld Joining Mat'l & Heat #	Cladding Mat'l and Heat #
001 1 pc	W003-3	2872-8		
002 1 pc	W005-5	805222-1		
003 1 pc	W003-3	060232		

weld joining procedure used NA
(include revision #)

cladding procedure used NA
(include revision #)

heat treating procedure used NA
(include revision #)

One copy each of the following documents as required by the purchase order are attached to this letter. All (including letter) are included with this shipment.

✓ Westinghouse Quality Release
NA Base material mill test report(s)
NA Weld operator certification
NA Heat treat chart(s)
✓ Inspection Report
NA Weld joining material mill test report
NA Cladding material mill test report
NA Other

One additional copy each of this letter and the above documents are hereby forwarded to the Westinghouse Buyer.

All records supporting this certification letter are available at Tooling Specialists.

Thomas D Shaw
(signature)

Tooling Specialists, Inc.

13

INSPECTION REPORT

Page 1 of 1

TOOLING SPECIALISTS, INC.
Latrobe, Pa. 15650
Phone: (412) 539-2534

Dwg. # W 005 Rev. 5
Revision
Item
P. O. # Item # 002 544-MXK-410650-RN
Work Order # 21729

CUSTOMER: WNES

PART DESCRIPTION: (1) .12" SCH 405 SS. Calibration Block A.I. No. 805222-1

IF OUT OF TOLERANCE, PLACE X IN BOX TO RIGHT OF DIMENSION.

DRAWING DIMENSIONS	Part No.	X	Part No.	X	Part No.	X	Part No.	X	Part No.	X	Part No.	X
Nom. Wall T - .375	.368"											
(1) 1/2" T" hole	.184"											
Hole Dia. 3/32	.092"											
6" +2" -.25" Length	6.00"											
A° - 45°	45°											
C° - 7.51°	7.51°											
C" - .835"	.8											
E° - 4.49°	4.49°											
E" - .5"	.5"											
F° - 4.81°	4.91°											
F" - .5"	.5"											
1 1/2" - Depth of Hole	1.5"											
1/2" To Notch	.5"											
1" Notch (Length)	1"											
45° Notches	45°											
1" To Notches	1"											
D - 10% T" Depth of Notches	Range .033-.037											

INSPECTOR: Wm H. Jones 5-5-80

RECEIVING INSPECTOR:

NOM. PIPE SIZE"	SCHED ULE	NOM. WALL 'T'"	O.D."	HOLE DIAM ETER"	HOLES 1/4T	HOLES 1/2T	HOLES 3/4T	NOTCHES CIRC. O.D.	NOTCHES CIRC. I.D.	NOTCHES AXIAL O.D.	NOTCHES AXIAL I.D.	NOTCHES Length"	NOM. ARC A°	B°	B" (O.D.)	C°	C" (O.D.)	E°	E"& F"	F°
12	40S	.375	12.75	3/32	-	1	-	X	X	X	-	6	45	-	-	7.51	.835	4.49	.5	4.81

NOTE: Original dimensional requirements supplied to manufacturer.

General Data

1. E and F Dimension - minimum at bottom of notches (.500").
2. D Dimension - Typical all notches (10% of measured thickness) +.500" -.010".
3. A Dimension + to 360° and -.080" of arc.
4. Length +2" -.25".
5. Holes optional for T less than .8".
6. Flat blocks .8"T or less may contain 1/2T hole only.
7. Final acceptable dimensions to be based on intent.
8. Hole location to be based on actual "T".
9. Flat side of notches to be perpendicular notched surfaces, within 2°.
10. Side drilled holes to be within ± 1/32" tolerance.

Intent

1. C Dimension to be approximately 3/4" from edge of arc segment.
2. E and F dimension applicable to both sides of centerline so as to provide 1" long (at bottom) notches.
3. B Dimension to locate axial notches so as not to impose on end of hole at C location or on end of notches at centerline.
4. Circumferential reflectors to be positioned to allow 2T (Full Vee) calibration at 45° beam angle (not applicable for 1 1/2" Sch 80, 1 1/2" Sch 160, 2" Sch 80, 2" Sch 160, 3" Sch 40 & 3" Sch 80).
5. Circumferential holes and notches to be plus or minus .1" from ends.

TEST REPORT

THE YOUNGSTOWN WELDING & ENGINEERING CO.

3700 OAKWOOD AVE.
YOUNGSTOWN, OHIO 44509

CUSTOMER: KEYSTONE TUBULAR SERVICE CORP.
Butler, Pennsylvania

CUSTOMER ORDER NO.: 80-S-0503
YW&E CONTRACT NO.: 1635
DATE: 7-18-77

MATERIAL: Types 304, 304L, 316, 316L Stainless Steel

SPECIFICATION: ASTM A-312, ASME SA-312

ITEM	HEAT NO.	QUANTITY	DESCRIPTION		
5 (Keystone #7)	48290	4 pcs	12" IPS Schedule 10 x 20 ft. R/L - T304	TOTAL:	79' 2"
6 (Keystone #8)	413311	2 pcs	12" IPS Schedule 40s x 20 ft. R/L - T304L	TOTAL:	37' 11"
7 (Keystone #9)	412440 8052221	1 pc 1 pc	12" IPS Schedule 40s x 20 ft. R/L - T316 12.750" x .375" WALL	TOTAL:	40' 5"

CHEMICAL COMPOSITION

ITEM	C	Mn	P	S	Si	Cr	Ni	Zn	Mo	Fe	Co	Ti	Pb	Cu
5	.065	1.74	.016	.025	.62	18.40	8.70		.18		.12			.23
6	.017	1.77	.033	.020	.44	19.50	10.48							
7														
412440	.048	1.74	.031	.020	.45	17.17	13.29		2.28					
8052221	.058	1.87	.035	.009	.60	17.43	13.00		2.27					

PHYSICAL TESTS

ITEM	TENSILE STRENGTH, PSI	YIELD PSI	% ELONG.	% R. of A.	HARDNESS	BEND TEST	FLATT. TEST	PSI HYDRO	X-RAY
5	87,300	44,300	58.0		B87		OK	400	
6	81,000	37,000	59.0		B82.5		OK	750	
7									
412440	86,000	40,000	49.0		BHN162		OK	900	
8052221	85,310	50,840	51.0		B83		"	"	

Sworn and subscribed to before me

this _____ day of _____, 19_____

_____

Q. C. REVIEWED
7/21/77 PJL

We hereby certify that the above items have been inspected and tested in accordance with and have met all the requirements of the specifications shown, including data furnished us by the producing mill.

THE YOUNGSTOWN WELDING & ENGINEERING CO.

BY: James E. Stephenson

THIS REPORT NOTARIZED ONLY WHEN REQUIRED

/ke

NEW YORK POWER AUTHORITY
INDIAN POINT NUCLEAR POWER PLANT
UNIT NO. 3
CALIBRATION BLOCKS

INDIAN POINT UNIT NO. 3 DESIGNATION	:	INT-12
COMPONENT/SYSTEM	:	10" SCH 160 PIPING
SIZE/SCHEDULE	:	10" SCH 160 1.125"T
MATERIAL	:	A376 TP316 STAINLESS STEEL
HEAT OR IDENTITY NUMBER	:	2633-13-1

ASME SECTION V AND XI 1983 EDITION THROUGH SUMMER 1983 ADDENDA REQUIREMENTS:

1. Section V : T-110 and T-548
2. Section XI : Article III-1100, Supplement 7 and IMA-2250
3. Material : A376 TP316 Stainless Steel
4. Size/Schedule: 10" SCH 160 1.125"T

WESTINGHOUSE ELECTRIC CORPORATION - NSID - INSPECTION SERVICE DESIGN:

Calibration block was designed to meet intent of ASME Boiler and Pressure Vessel Code Section XI 1974 Edition through Summer 1975 Addenda.

RECOMMENDATION:

Calibration block design follows the guidelines of Section V and Section XI 1983 Edition through Summer 1983 for Austenitic Piping. At this time there is no existing Class 1 or Class 2 10" SCH 160 Stainless Steel Piping and this calibration block is not required. Modifications of this design to meet the requirements of Section V and XI - 1983 Edition through Summer 1983 Addenda for calibration blocks for "ferritic piping and design T-547.1" would be to increase arc length to 95° and locate axial notches 1.125" minimum from edge of block and as required by Table III-3430-1 notch depth to 0.104T - 0.009T squared with tolerance of +10%-20%.

NOTES:

1. WHEN MEASURED FROM EITHER SIDE OF CENTERLINE MINIMUM LENGTH AT BOTTOM OF AXIAL NOTCHES TO BE 0.5" AS SHOWN IN SIDE VIEW.
2. NOTCH DEPTH 10% OF MEASURED THICKNESS +0.005"-0.010".
3. PREP ALLOWED IN AREA OF SIDE DRILLED HOLE SHALL NOT INFRINGE ON HOLE SIZE REQUIREMENTS.
4. CIRCUMFERENTIAL HOLES AND NOTCHES TO BE PLUS OR MINUS 0.1" FROM ENDS.
5. LOCATE AXIAL NOTCHES SO AS NOT TO IMPOSE ON END OF HOLES OR ON END OF NOTCHES AT CENTERLINE.
6. FLAT SIDE OF NOTCHES TO BE PERPENDICULAR NOTCHED SURFACES, WITHIN 2°.
7. HOLE LOCATION TO BE BASED ON ACTUAL "T".
8. SIDE DRILLED HOLE DIAMETER TOLERANCE TO BE WITHIN ±0.03"
9. DRILL HOLES PERPENDICULAR TO RADIUS.
10. ARC DIMENSION +360° AND -0.080".
11. LENGTH TOLERANCE TO BE +2.00"-0.25"

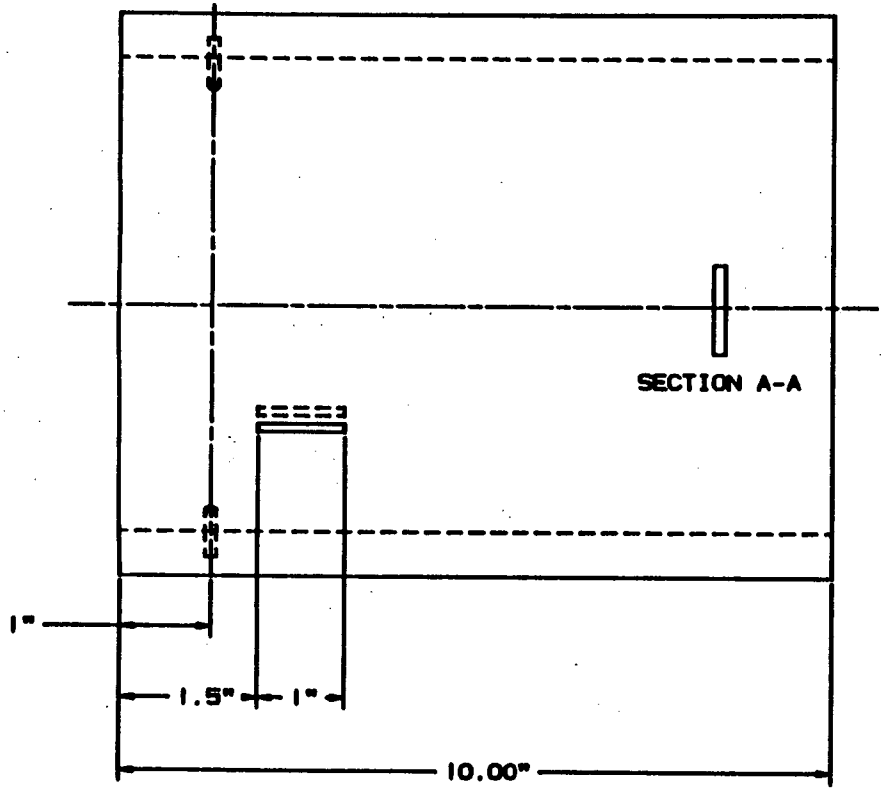

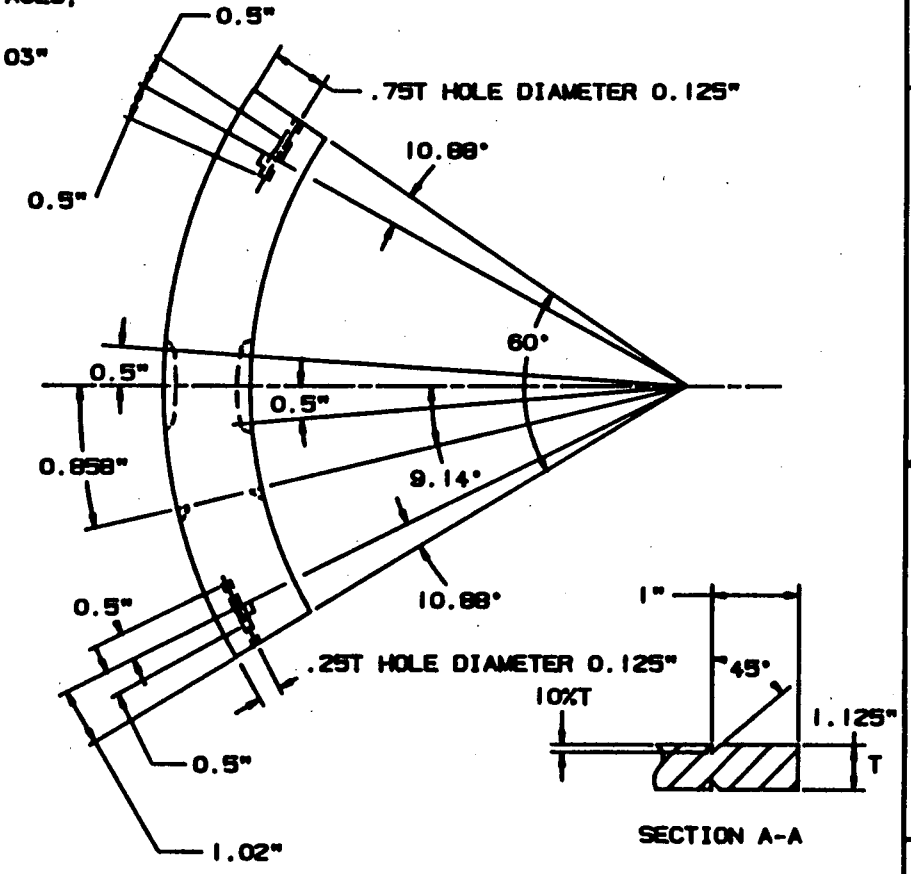

COMPUTER SYSTEM PLANT MODELING

MGR. TECHNICAL APPROVAL Phillip C. Burke	11-20-86	Westinghouse Electric Corporation PLANT ENGINEERING DIVISION - PITTSBURGH, PA
LEVEL III REVIEW David Kunz	11-20-86	TITLE CALIBRATION BLOCK INT-12 10" SCH 160 PIPING 10" SCH 160 1.125"T-C A376 TP316 STAINLESS STEEL HEAT NO.: 535771 IDENTITY NO.: 2633-13-1
ENG		
ENG		
MFR		SIZE C DWG. NO. REV.

REVISION

NSD PA1010

Nuclear Service Division
QUALITY RELEASE

QR- 1623 REV. 0

PURCHASE ORDER	PART NAME	DRAWING & REV
294103	Calibration Blocks	#003 Rev3, #004 Rev. #005 Rev5, #006 Rev6, #007 Rev.

PAR NO.	CHG. NOTICE NO.	P.O. ITEM NO.	PROJ./S.O. NO.	QTY. ON ORDER	QTY. RELEASED
0	1	1 thru 6, 8 thru 15	VISN-9327/IPBN-9527	65	59

SUPPLIER	E. SPEC. & REV.	ORDER
Tooling Specialists	N/A	COMPLETE ☐ YES ☑ NO

SERIAL OR IDENTIFICATION NOS.

HT #: 30106 (6 pieces), NNN7B (A thru F), N7212 (A & B), 182 (A thru H), 8051726 (A thru H), M9948 (A thru D), 2626-8-1 (A thru E), 245865 (A thru H), 534982 (A thru F), 2633-13-1 (A thru F).

The equipment shown hereon is released by W Quality Assurance. Shipment may be made subject to authorization by W Purchasing. In the Audit Checklist below, an A indicates acceptability, a C indicates a contingency and a W indicates that W QA has waived the auditing or witnessing of the attribute. All non-applicable items are lined out.

AUDIT CHECKLIST

[A] Material Certifications	~~[ ] Non-Operating Electrical Tests~~
~~[ ] Heat Treat Records~~	~~[ ] Operating Electrical Test~~
~~[ ] RT Film and Records~~	~~[ ] Pressure Test~~
~~[ ] PT/MT Records~~	~~[ ] Seat Tightness Test~~
[A] Visual	~~[ ] Performance Test~~
[A] Dimensional	[A] Cleanliness
~~[ ] UT Records~~	[A] Packaging
~~[ ] Personnel Qualification: Welding, NDT~~	~~[ ] Code Form~~
~~[ ]~~	~~[ ] Painting~~
~~[ ]~~	[A] C.of C.

DEVIATION NOTICES AND REMARKS (ALL DEVIATIONS HAVE BEEN APPROVED BY THE RESPONSIBLE WESTINGHOUSE ENGINEER UNLESS A SPECIFIC EXCEPTION IS STATED.)

Six of the above blocks to be shipped to IPP.
s/N's: IPP-8, IPP-11, IPP-27, IPP-34, IPP-35, IPP-36.

THE SUPPLIER CERTIFIES that for the equipment and material released, all contractual requirements have been met. Approved deviations, if any, are listed above.

SUPPLIER SIGNATURE: Thomas Strawn DATE: 6/29/79
TITLE:

The equipment shown hereon is released by W Quality Assurance. Shipment may be made subject to authorization by W Purchasing.

The equipment supplier has certified that the equipment above meets all requirements of the purchase order, drawings and specifications. Westinghouse has reviewed evidence supporting this release and except as specified above has detected no deviations from such requirements. This release does not waive any rights Westinghouse may have under the purchase order including Westinghouse's right to reject the equipment upon discovery of any such deviations after arrival at destination.

K.R. Moore 6-29-79
Westinghouse Quality Assurance Representative

REQUISITIONER

TOOLING
SPECIALISTS
INCORPORATED

MACHINE TOOL BUILDERS — SPECIAL MACHINING — DIES — ENGINEERING SERVICE

P. O. BOX 251, LATROBE, PA. 15650 Phone: (412) 539-2534

LETTER OF COMPLIANCE

June 29, 1979

This is a statement of compliance to the requirements of Westinghouse Purchase Order Number 544-MXK-294103-RN.

All required processes, tests, and inspections have been performed. Inspection data sheets, heat treat charts, weld wire and material certifications are attached as required by the Purchase Order.

A listing of Purchase Order items in this shipment is attached.

Documented evidence of compliance supporting this certification is available at Tooling Specialists.

Sincerely yours,

Thomas D. Shearer

Thomas D. Shearer
Manager Special Products

TDS:keo

2" Sch 160 Material has not been received yet

INSPECTION REPORT

Page _____ of _____

TOOLING SPECIALISTS, INC.
Latrobe, Pa. 15650
Phone: (412) 539-2534

Dwg. #
Revision
Item
P. O. #
Work Order # 21-235

CUSTOMER:

PART DESCRIPTION:
10 Sch 160 Ht. 26 33-13 1

IF OUT OF TOLERANCE, PLACE X IN BOX TO RIGHT OF DIMENSION.

DRAWING DIMENSIONS		Part No. A	X	Part No. B	X	Part No. C	X	Part No. D	X	Part No. E	X	Part No. F	X
Nom. wall Thickness		1.166		1.177		1.155		1.121		1.120		1.142	
Cir. Notch	OD	.116		.117		.115		.112		.112		.114	
	ID	.116		.117		.115		.112		.112		.114	
Axial Notch	OD	.117		.117		.115		.112		.113		.115	
	ID	.117		.117		.115		.112		.113		.115	
Length		10.140		10.140		10.140		10.140		10.140		10.140	
A°		60°		60°		60°		60°		60°		60°	
1/4 hole		.294		.294		.286		.280		.282		.288	
3/4 hole		.893		.881		.895		.850		.843		855	
hole dia.		1/8		1/8		1/8		1/8		1/8		1/8	
	C	10°52'		10°52'		10°52'		10°52'		10°52'		10°52'	
	B	9°8'		9°8'		9°8'		9°8'		9°8'		9°8'	
	E	5°19'		5°19'		5°19'		5°19'		5°19'		5°19'	
	F	6°58'		6°58'		6°58'		6°58'		6°58'		6°58'	

INSPECTOR: Thomas J Thomas

RECEIVING INSPECTOR:

W.D.S. 10 Rev. 8 04/26/79

NOM. PIPE SIZE"	SCHED ULE	NOM. WALL 'T'"	O.D."	HOLE DIAM ETER"	H O L E S 1/4T	1/2T	3/4T	N O T C H E S CIRC. O.D.	CIRC. I.D.	AXIAL O.D.	AXIAL I.D.	Length"	NOM. ARC A°	B°	B" (O.D.)	C°	C" (O.D.)	E°	E"& F"	F°
10	160	1.125	10.75	1/8	1	–	1	X	X	X	X	10	60	9.14	.858	10.88	1.02	5.33	.5	6.97

NOTE: Original dimensional requirements supplied to manufacturer.

General Data

1. E and F Dimension – minimum at bottom of notches (.500").
2. D Dimension – Typical all notches (10% of measured thickness) +.500" –.010".
3. A Dimension + to 360° and –.080" of arc.
4. Length +2" –.25".
5. Holes optional for T less than .8".
6. Flat blocks .8"T or less may contain 1/2T hole only.
7. Final acceptable dimensions to be based on intent.
8. Hole location to be based on actual "T".
9. Flat side of notches to be perpendicular notched surfaces, within 2°.
10. Side drilled holes to be within ± 1/32" tolerance.

Intent

1. C Dimension to be approximately 3/4" from edge of arc segment.
2. E and F dimension applicable to both sides of centerline so as to provide 1" long (at bottom) notches.
3. B Dimension to locate axial notches so as not to impose on end of hole at C location or on end of notches at centerline.
4. Circumferential reflectors to be positioned to allow 2T (Full Vee) calibration at 45° beam angle (not applicable for 1 1/2" Sch 80, 1 1/2" Sch 160, 2" Sch 80, 2" Sch 160, 3" Sch 40 & 3" Sch 80).
5. Circumferential holes and notches to be plus or minus .1" from ends.

Extrusion Facility

☒ ASTM A-376 ☒ ASME SA-3 CW 1401-F

Curtiss-Wright Corporation

60 Grider Street • Buffalo, New York 14215

DATE: May 31, 1975

CUSTOMER CAPITOL PIPE & STEEL PRODUCTS, INC.

CUSTOMER P.O. 71626-00N

PART NUMBER 10.750" O.D. x 1.125" A.W. (Sch 160)

SALES ORDER NO. 2633

PART NAME PRESSURE TUBING

SPECIFICATIONS ASME CODE SEC. III FOR CLASS I PIPE 1971 EDITION INCLUDING ADDENDA THRU SUMMER 1973.

TYPE 316/316H

	REQUIRED	MILL HEAT NO. 535771 C.W. Code 2633	MILL HEAT NO. C.W. Code
ELEMENT		HEAT LOT NO. 042575	HEAT LOT NO.
CARBON	0.04 - 0.08	Mill 0.06	Check 0.055
MANGANESE	2.00 MAX.	1.80	1.74
SILICON	0.75 MAX.	0.44	0.40
CHROMIUM	16.0 - 18.0	16.58	16.50
NICKEL	11.0 - 14.0	11.25	11.20
PHOSPHORUS	0.030 Max.	0.024	0.022
SULPHUR	0.030 MAX.	0.017	0.016
MOLYBDENUM	2.0 - 3.0	2.37	2.35
TEST	TRANSVERSE	PHYSICAL PROPERTIES	
TENSILE, PSI	75,000 MIN.	80,200	
YIELD, PSI	30,000 MIN.	37,900	
ELONG, % IN 2 IN.	20 MIN.	60	
FLATTENING		OK	

This certificate covers the following pieces.

2633-11-1
2633-11-2
→ 2633-13-1
2633-13-2
2633-14-1
2633-14-2
2633-15-1
2633-15-2
2633-16-1
2633-16-2-2

Tooling Spec.
R9-1245A
N09473

PARTS WERE HYDROSTATICALLY TESTED AT 2800 P.S.I. FOR A MINIMUM OF 5 SECONDS. NO DEFECTS NOTED.

Parts were Ultrasonically tested to a 5% Notch in accordance ASME Sec. III, Para. NB2552 and were accepted.

Parts were ground as a final cleaning operation allowed by ASME Case Code #1525.

Parts were heated above 1950°F for 1/2 hour and rapidly cooled.

We hereby certify to the chemical analysis and physical tests reported herein.

Supervisor of Metallurgy G. G. Weart G. G. Weart

Sworn to before me this 2nd day of June 1975. Charles B. Diehl, Notary Public, State of New York, Qualified in Erie County, My Commission expires March 30, 1976.

Charles B. Diehl

NEW YORK POWER AUTHORITY
INDIAN POINT NUCLEAR POWER PLANT
UNIT NO. 3
CALIBRATION BLOCKS

INDIAN POINT UNIT NO. 3 DESIGNATION	:	INT-13
COMPONENT/SYSTEM	:	10" SCH 140 ACCUMULATOR DISCHARGE AND PLOCAP PIPING
SIZE/SCHEDULE	:	10" SCH 140 1.00"T
MATERIAL	:	A312 TP304 STAINLESS STEEL
HEAT OR IDENTITY NUMBER	:	D61232

ASME SECTION V AND XI 1983 EDITION THROUGH SUMMER 1983 ADDENDA REQUIREMENTS:

1. Section V : T-110 and T-548
2. Section XI : Article III-1100, Supplement 7 and IMA-2250
3. Material : A376 TP316 Stainless Steel
4. Size/Schedule: 10" SCH 140 1.00"T

WESTINGHOUSE ELECTRIC CORPORATION - NSID - INSPECTION SERVICE DESIGN:

Calibration block was designed to meet intent of ASME Boiler and Pressure Vessel Code Section XI 1974 Edition through Summer 1975 Addenda.

RECOMMENDATION:

Calibration block design follows the guidelines of Section V and Section XI - 1983 Edition through Summer 1983 Addenda for Austenitic Piping. Modifications of this design to meet the requirements of Section V and Section XI - 1983 Edition through Summer 1983 Addenda for calibration blocks for "ferritic piping and design T-547.1" would be to increase arc length to 95° and as required by Table III-3430-1 notch depth to 0.104T - 0.009T squared with tolerance of +10%-20%. P-Number Groupings for Materials A312 TP304 Stainless Steel and A376 TP316 Stainless Steel are equivalent.

NOTES:

1. WHEN MEASURED FROM EITHER SIDE OF CENTERLINE MINIMUM LENGTH AT BOTTOM OF AXIAL NOTCHES TO BE 0.5" AS SHOWN IN SIDE VIEW.
2. NOTCH DEPTH 10% OF MEASURED THICKNESS +0.005"-0.010".
3. PREP ALLOWED IN AREA OF SIDE DRILLED HOLE SHALL NOT INFRINGE ON HOLE SIZE REQUIREMENTS.
4. CIRCUMFERENTIAL HOLES AND NOTCHES TO BE PLUS OR MINUS 0.1" FROM ENDS.
5. LOCATE AXIAL NOTCHES SO AS NOT TO IMPOSE ON END OF HOLES OR ON END OF NOTCHES AT CENTERLINE.
6. FLAT SIDE OF NOTCHES TO BE PERPENDICULAR NOTCHED SURFACES, WITHIN 2°.
7. HOLE LOCATION TO BE BASED ON ACTUAL "T".
8. SIDE DRILLED HOLE DIAMETER TOLERANCE TO BE WITHIN ±0.03"
9. DRILL HOLES PERPENDICULAR TO RADIUS.
10. ARC DIMENSION +360° AND -0.080".
11. LENGTH TOLERANCE TO BE +2.00"-0.25"

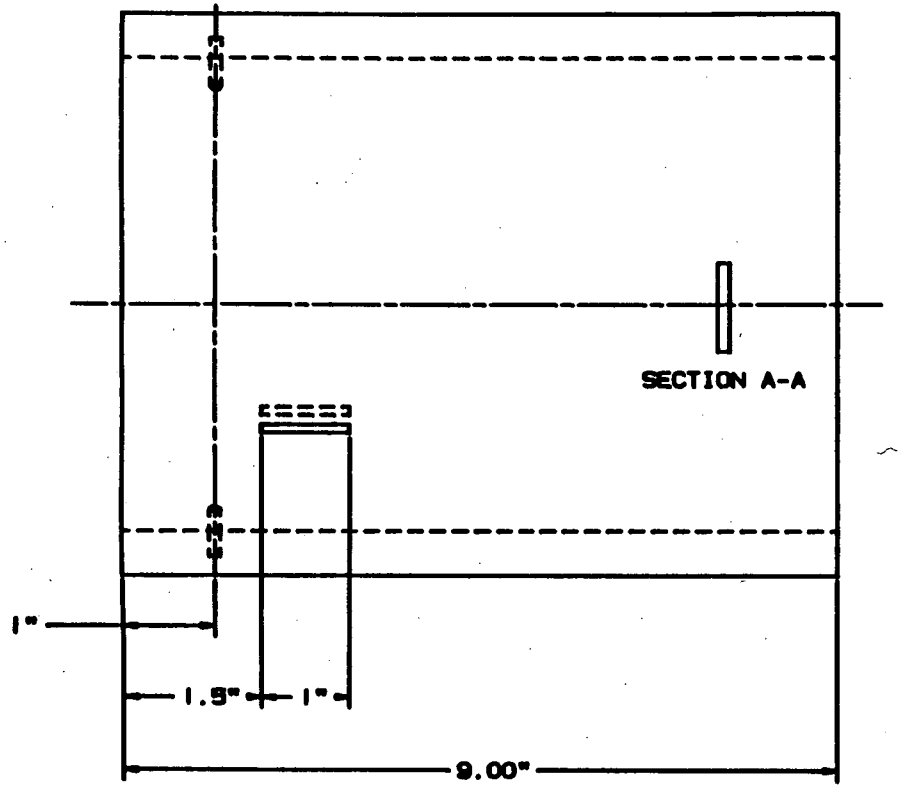

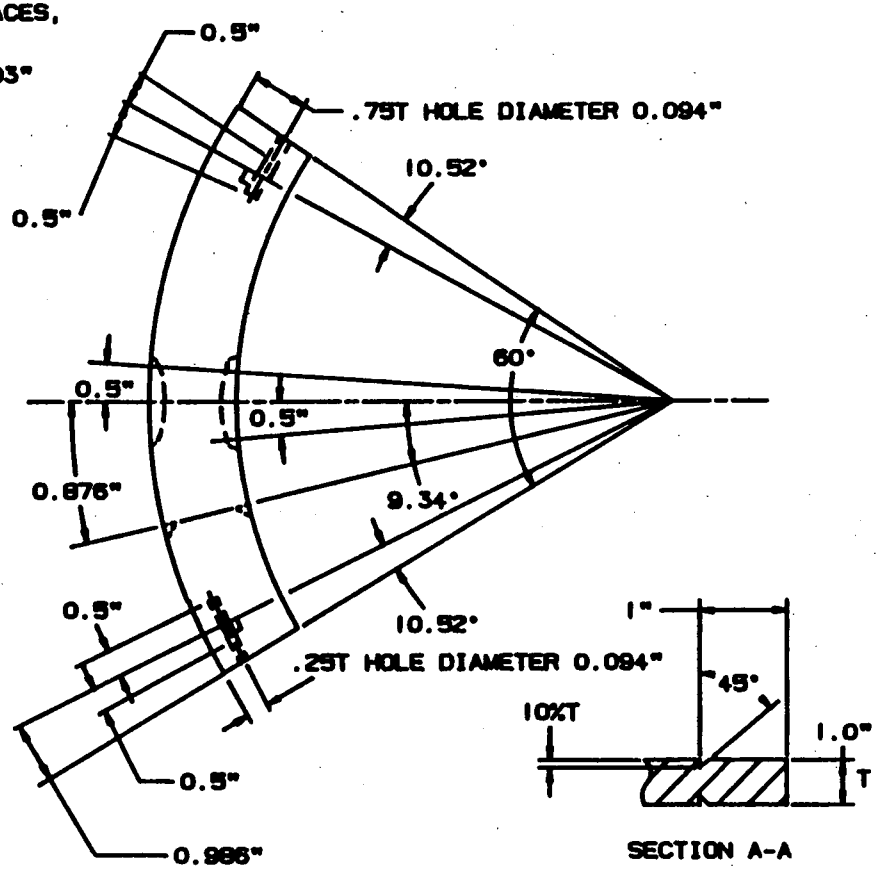

COMPUTER SYSTEM PLANT MODELING

HEAD TECHNICAL APPROVAL Philip C. Burkes	11-20-86	Westinghouse Electric Corporation PLANT ENGINEERING DIVISION - PITTSBURGH, PA
LEVEL III REVIEW David Funk	11-20-86	TITLE CALIBRATION BLOCK INT-13 10" SCH 140 ACCUMULATOR DISCHARGE AND FLOCAP PIPING 10" SCH 140 1.00"T-B A312 TP304 STAINLESS STEEL HEAT NO.: D81232
		C SK. NO. REV.

NSD PA1010

Nuclear Service Division
QUALITY RELEASE

QR- 1619 REV. 0

PURCHASE ORDER	PART NAME	DRAWING & REV.
544-XK-287369-RN	UT CALIBRATION BLOCKS	W007 Rev 1, W004 Rev 4, W003 Rev 3, W005 Rev 3, W005 Rev 5

PAR NO.	CHG. NOTICE NO.	P.O. ITEM NO.	PROJ./S.O. NO.	QTY. ON ORDER	QTY. RELEASED
0	3	001 thru 005, 007 thru 016	WFSN-9323	66	66

SUPPLIER	E. SPEC. & REV.	ORDER
TOOLING SPECIALISTS	N/A	COMPLETE ☑ YES ☐ NO

SERIAL OR IDENTIFICATION NOS. 71771 (A thru F), 26265 (A thru F), 2876-1-1 (A thru E), HT #s: 87623, 01003 (A thru D), 26896 (A & B), M9290 (A & B), M2060 (A & B), D61232 (A thru F), 3122-5-2 (A thru E), 2637-4-2 (A thru F), M9959 (A thru D), M0937 (A thru E), 1971-12-1 (A thru F), 805222-1 (A thru F).

The equipment shown hereon is released by W Quality Assurance. Shipment may be made subject to authorization by W Purchasing. In the Audit Checklist below, an A indicates acceptability, a C indicates a contingency and a W indicates that W QA has waived the auditing or witnessing of the attribute. All non-applicable items are lined out.

AUDIT CHECKLIST

☑ A Material Certifications	~~☐ Non-Operating Electrical Tests~~
~~☐ Heat Treat Records~~	~~☐ Operating Electrical Test~~
~~☐ RT Film and Records~~	~~☐ Pressure Test~~
~~☐ PT/MT Records~~	~~☐ Seat Tightness Test~~
☑ A Visual	~~☐ Performance Test~~
☑ A Dimensional	☑ A Cleanliness
~~☐ UT Records~~	☑ W Packaging
~~☐ Personnel Qualification: Welding, NDT~~	~~☐ Code Form~~
~~☐~~	~~☐ Painting~~
~~☐~~	~~☐~~

DEVIATION NOTICES AND REMARKS (ALL DEVIATIONS HAVE BEEN APPROVED BY THE RESPONSIBLE WESTINGHOUSE ENGINEER UNLESS A SPECIFIC EXCEPTION IS STATED.)

Several pieces for a certain heat no. noted above by alphanumeric designation.

THE SUPPLIER CERTIFIES that for the equipment and material released, all contractual requirements have been met. Approved deviations, if any, are listed above.

SUPPLIER SIGNATURE: Thomas Kraer DATE: 3/27/79
TITLE:

The equipment shown hereon is released by W Quality Assurance. Shipment may be made subject to authorization by W Purchasing.

The equipment supplier has certified that the equipment above meets all requirements of the purchase order, drawings and specifications. Westinghouse has reviewed evidence supporting this release and except as specified above has detected no deviations from such requirements. This release does not waive any rights Westinghouse may have under the purchase order including Westinghouse's right to reject the equipment upon discovery of any such deviations after arrival at destination.

K. R. Moran 3-27-79
Westinghouse Quality Assurance Representative

SUPPLIER (ATTACH TO SHIPPING PAPERS)

TOOLING
SPECIALISTS
INCORPORATED

MACHINE TOOL BUILDERS — SPECIAL MACHINING — DIES — ENGINEERING SERVICE

P. O. BOX 251, LATROBE, PA. 15650 Phone: (412) 539-2534

Letter of Compliance

March 27, 1979

This is a statement of compliance to the requirements of Westinghouse Purchase Order Number 544-XK-287369-RN.

All required processes, tests and inspections have been performed. Inspection data sheets, heat treat charts, weld wire and material certifications are attached as required by the Purchase Order.

A listing of Purchase Order items in this shipment is attached.

Documented evidence of compliance supporting this certification is available at Tooling Specialists.

Sincerely yours,

Thomas D Shearer

Thomas D. Shearer
Manager Special Products

TDS/sfz

INSPECTION REPORT

Page_____ of _____

TOOLING SPECIALISTS, INC.
Latrobe, Pa. 15650
Phone: (412) 539-2534

Dwg. # 003 Rev 3
P. O. #
Revision
Item
Work Order # 21-077

CUSTOMER:

w 003 Rev 3

PART DESCRIPTION:

10 Sch 140 H.T. D61232

IF OUT OF TOLERANCE, PLACE X IN BOX TO RIGHT OF DIMENSION.

DRAWING DIMENSIONS		Part No. A	X	Part No. B	X	Part No. C	X	Part No. D	X	Part No. E	X	Part No. F	X
Nom. Wall Thickness		1.053		1.052		1.048		1.046		1.044		1.048	
Cir. Notch	O.D.	.105		.105		.104		.104		.104		.104	
	I.D.	.105		.105		.104		.104		.104		.104	
Axial Notch	O.D.	.105		.105		.105		.104		.104		.104	
	I.D.	.105		.105		.105		.104		.104		.104	
A°		60°		60°		60°		60°		60°		60°	
Length		9"		9"		9"		9"		9"		9"	
1/4 T Hole, side	3/32 dia.	.264		.263		.262		.262		.261		.261	
3/4 T Hole, side	3/32 dia.	.786		.787		.786		.783		.782		.784	
	B	9°38'		9°38'		9°38'		9°38'		9°38'		9°38'	
	C	10°31'		10°31'		10°31'		10°31'		10°31'		10°31'	
	E	5°19'		5°19'		5°19'		5°19'		5°19'		5°19'	
	F	6°44'		6°44'		6°44'		6°44'		6°44'		6°44'	

INSPECTOR: Owen Sherman

RECEIVING INSPECTOR:

W.D.S. 10 Rev. 7 03/18/79

NOM. PIPE SIZE"	SCHED ULE	NOM. WALL 'T'"	O.D."	HOLE DIAM ETER"	HOLES 1/4T	1/2T	3/4T	NOTCHES CIRC. O.D.	CIRC. I.D.	AXIAL O.D.	AXIAL I.D.	Length"	NOM. ARC A°	B°	B" (O.D.)	C°	C" (O.D.)	E°	E"& F"	F°
10	140	1.00	10.75	3/32	1	-	1	X	X	X	X	9	60	9.34	.876	10.52	.986	5.33	.5	6.74

NOTE: Original dimensional requirements supplied to manufacturer.

General Data

1. E and F Dimension - minimum at bottom of notches (.500").
2. D Dimension - Typical all notches (10% of measured thickness) +.500" -.010".
3. A Dimension + to 360° and -.080" of arc.
4. Length +2" -.25".
5. Holes optional for T less than .8".
6. Flat blocks .8"T or less may contain 1/2T hole only.
7. Final acceptable dimensions to be based on intent.
8. Hole location to be based on actual "T".
9. Flat side of notches to be perpendicular notched surfaces, within 2°.
10. Side drilled holes to be within ± 1/32" tolerance.

Intent

1. C Dimension to be approximately 3/4" from edge of arc segment.
2. E and F dimension applicable to both sides of centerline so as to provide 1" long (at bottom) notches.
3. B Dimension to locate axial notches so as not to impose on end of hole at C location or on end of notches at centerline.
4. Circumferential reflectors to be positioned to allow 2T (Full Vee) calibration at 45° beam angle (not applicable for 1 1/2" Sch 80, 1 1/2" Sch 160, 2" Sch 80, 2" Sch 160, 3" Sch 40 & 3" Sch 80).
5. Circumferential holes and notches to be plus or minus .1" from ends.

DATE: JAN.13.1976 CERTIFICATE No. YYD9247 REV.

SUPPLIER: 022 --- 8252 OKAYA AND CO.,LTD

CUSTOMER: TIOGA PIPE SUPPLY INC.

ARTICLE: SEAMLESS STAINLESS STEEL PIPE (HOT FINISHED)

MILL CERTIFICATE

10 SUMITOMO METAL INDUSTRIES, LTD
STEEL TUBE WORKS
1 NISHINO-CHO OHAMA-MACHI AMAGASAKI-SHI HYOGO

STANDARD: ASTM A312/A376 ASME SA312/SA376 GR.TP304

SPECIFICATION

NOTES
62

01 Unit
Inch=(I), Inch=(*)
mm=(M), mm=Space
02 Lot=(L), Check=(C)
03 Direction
Longitudinal=(L), No Space
Transverse=(T)
04 Type of Specimen
JIS T.P.No.4=(4)
JIS T.P.No.5=(5)
JIS T.P.No.11=(11)
JIS T.P.No.12=(12)
Full Section=(F)
Rectangular=(R)
Round Bar=(B)
05 Unit PSI=(P)
kg/mm²=(K), Ton/in²=(T)
N/mm²=(N) MPa=(M)
06 Yield Point or
Yield Strength
07 Gauge Length
Short=(S), Short=(S)
50 5mm=(50 S)
Short=(S), 200mm=(200)
1"=(1"), 1.6"=(1.6")
8"=(8"), 8"=(8")
4√A (4A) 5.65√A (5A)
5.65√A=(5 (5A)
08 Method
HB=(B), HRB=(B)
HRC=(C), HV=(V)
HS=(S)
09 Type of Specimen
Bar U-notch
10×10mm=(1)
10×7.5mm=(2)
10×5.0mm=(3)
10×2.5mm=(4)
Bar V-notch
10×10mm=(5)
10×7.5mm=(6)
10×5.0mm=(7)
10×2.5mm=(8)
Bar U-notch
10×10mm=(A)
10×7.5mm=(B)
10×5.0mm=(C)
10×2.5mm=(D)
Bar U-notch
10×10mm=(E)
10×7.5mm=(F)
10×5.0mm=(G)
10×2.5mm=(H)
10 Unit
kg=m =(1)
kg=m/mf =(2)
ft-lbs =(3)
ft-lbs/in² =(4)
Joule =(5)
Joule/mf =(6)

Mill Work No.	Lot or T.P.No	Size (Unit *1) O.D.	I.D.	W.T.	Length	Quantity (Unit *1) No.of pcs.	Total Length	Weight kg	Order or Job No.
YYD9247		NOM10		SCH140	17F - 24F	2	40F 8"	1922	

Heat No.	Lot or T.P.No		C	Si	Mn	P	S	Cu	Ni	Cr	Mo	CO				Tensile Test G.L. *6 Yield Point	Tensile Strength	El %	Red %	Hardness	Grain Size No of Austenite	Impact Test at	
	min.		-	-	-	-	-		8.0	18.0		-				30000	70000	28					
	max.		.08	.75	2.00	.030	.030		11.0	20.0		-				-	-	-					
D61232		L	.06	.52	1.75	.026	.005		9.55	18.95		.23	L	RP		33570	81360	71					

CORROSION TEST (GOOD
(MIL.-P-1148C)

Description of Tests

Hydrostatic Test	Surface & Dimension	(Ring) Flattening	Drift Expanding or Flaring	Bending	Flange	Ring Expansion	Ring Pulling
2800 P.S.I. kg/cm² GOOD Result	GOOD	GOOD					

Surveyor To

Surveyor No.

SUMITOMO METAL INDUSTRIES LTD
STEEL TUBE WORKS

MK (DW-3-1 381×254

NEW YORK POWER AUTHORITY
INDIAN POINT NUCLEAR POWER PLANT
UNIT NO. 3
CALIBRATION BLOCKS

INDIAN POINT UNIT NO. 3 DESIGNATION	:	INT-14
COMPONENT/SYSTEM	:	SEAL WATER INJECTION FILTERS 31 & 32
SIZE/SCHEDULE	:	10" SCH 120 .844"T
MATERIAL	:	A312 TP304 STAINLESS STEEL
HEAT OR IDENTITY NUMBER	:	6-448

ASME SECTION V AND XI 1983 EDITION THROUGH SUMMER 1983 ADDENDA REQUIREMENTS:

1. Section V : T-110 and T-548
2. Section XI : Article III-1100, Supplement 7 and IMA-2250
3. Material : TP304 Stainless Steel
4. Size/Schedule: 10.75" - .875"T

WESTINGHOUSE ELECTRIC CORPORATION - NSID - INSPECTION SERVICE DESIGN:

Calibration block was designed to meet intent of ASME Boiler and Pressure Vessel Code Section XI 1974 Edition through Summer 1975 Addenda.

RECOMMENDATION:

Calibration block design follows the guidelines of Section V and Section XI - 1983 Edition through Summer 1983 Addenda for Austenitic Piping. Modifications of this design to meet the requirements of Section V and Section XI - 1983 Edition through Summer 1983 Addenda for calibration blocks for "ferritic piping and design T-547.1" would be to increase arc length to 95° and as required by Table III-3430-1 notch depth to 0.104T - 0.009T squared with tolerance of +10%-20%.

NOTES:

1. WHEN MEASURED FROM EITHER SIDE OF CENTERLINE MINIMUM LENGTH AT BOTTOM OF AXIAL NOTCHES TO BE 0.5" AS SHOWN IN SIDE VIEW.
2. NOTCH DEPTH 10% OF MEASURED THICKNESS +0.005"-0.010".
3. PREP ALLOWED IN AREA OF SIDE DRILLED HOLE SHALL NOT INFRINGE ON HOLE SIZE REQUIREMENTS.
4. CIRCUMFERENTIAL HOLES AND NOTCHES TO BE PLUS OR MINUS 0.1" FROM ENDS.
5. LOCATE AXIAL NOTCHES SO AS NOT TO IMPOSE ON END OF HOLES OR ON END OF NOTCHES AT CENTERLINE.
6. FLAT SIDE OF NOTCHES TO BE PERPENDICULAR NOTCHED SURFACES, WITHIN 2°.
7. HOLE LOCATION TO BE BASED ON ACTUAL "T".
8. SIDE DRILLED HOLE DIAMETER TOLERANCE TO BE WITHIN ±0.03"
9. DRILL HOLES PERPENDICULAR TO RADIUS.
10. ARC DIMENSION +360° AND -0.080".
11. LENGTH TOLERANCE TO BE +2.00"-0.25"

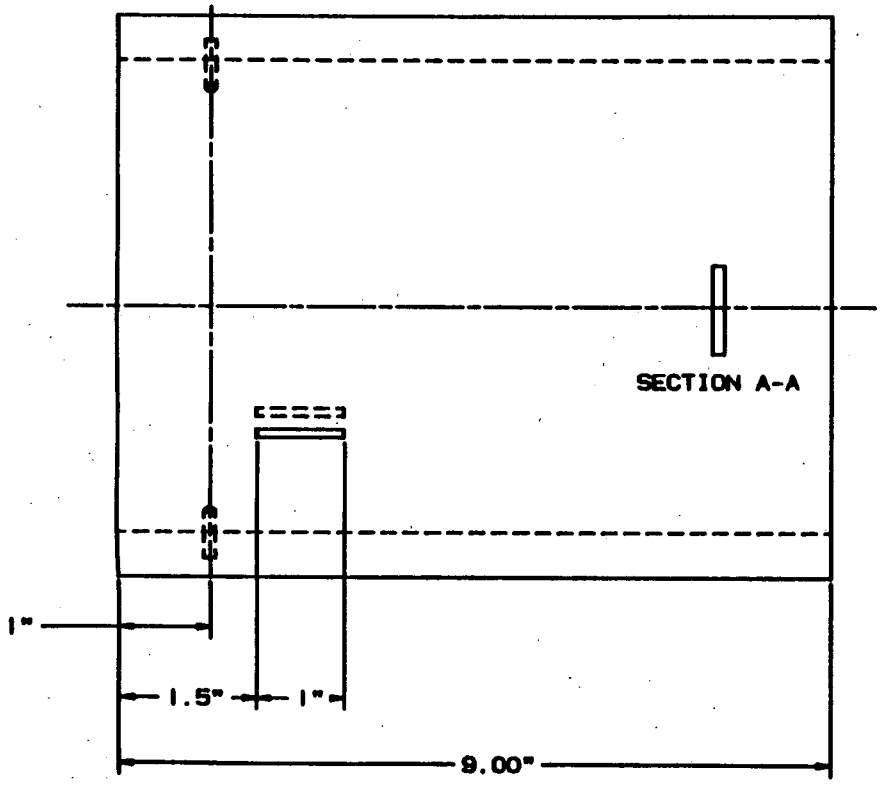

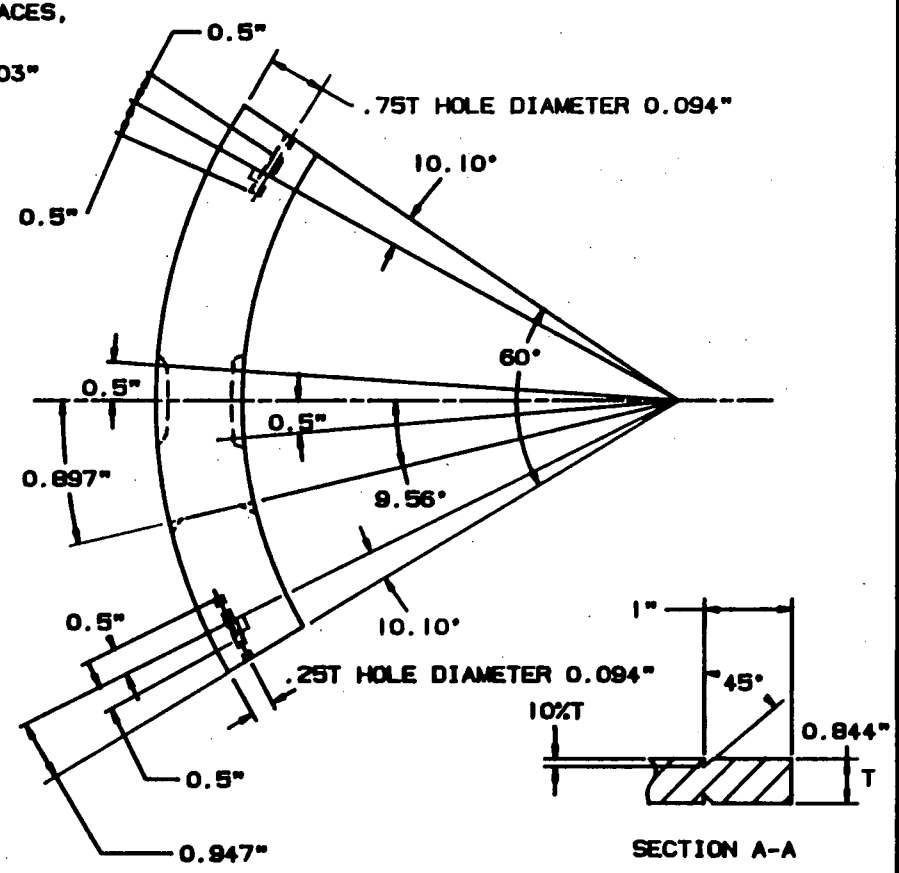

COMPUTER SYSTEM PLANT MODELING

NSSD TECHNICAL APPROVAL Phillip C. Burkes	11-30-86	Westinghouse Electric Corporation PLANT ENGINEERING DIVISION - PITTSBURGH, PA
LEVEL III REVIEW David Kenk	11-26-86	TITLE CALIBRATION BLOCK INT-14 SEAL WATER INJECTION FILTERS 31 & 32 10" SCH 120 .844"T-D A312 TP304 STAINLESS STEEL HEAT NO.: 6-448
ENG		
ENG		
MGR		C DR. NO. REV.

REVISION

NSD PA1010

Nuclear Service Division
QUALITY RELEASE

QR- 1921 REV. O

PURCHASE ORDER	PART NAME	DRAWING & REV.
410650	NT CALIBRATION BLOCKS	W003 REV3, W004 REV4, W005 REV5

PAR NO.	CHG. NOTICE NO.	P.O. ITEM NO.	PROJ./S.O. NO.	QTY. ON ORDER	QTY. RELEASED
0	0	1 THRU 6	INSN-9327	93	12

SUPPLIER	E. SPEC. & REV.	ORDER
TOOLING SPECIALISTS	N/A	COMPLETE ☐ YES ☒ NO

SERIAL OR IDENTIFICATION NOS.

(1) 12" SCH 160 (HT # 28728) / (6) 10" SCH 120 (HT # 6-448)
(1) 12" SCH 40S (HT # 805222-1) / (1) 10" SCH 40S (HT # 1971-12-1-2)
(1) 10" SCH 140 (HT # 061232) / (2) 4" SCH 160 (HT # 01038)

The equipment shown hereon is released by W Quality Assurance. Shipment may be made subject to authorization by W Purchasing. In the Audit Checklist below, an A indicates acceptability, a C indicates a contingency and a W indicates that W QA has waived the auditing or witnessing of the attribute. All non-applicable items are lined out.

AUDIT CHECKLIST

- [A] Material Certifications — SUPPLIED BY WNSD
- [ ] ~~Heat Treat Records~~
- [ ] ~~RT Film and Records~~
- [ ] ~~PT/MT Records~~
- [A] Visual
- [A] Dimensional
- [ ] ~~UT Records~~
- [ ] ~~Personnel Qualification: Welding, NDT~~
- [ ] ~~~~
- [ ] ~~~~
- [ ] ~~Non-Operating Electrical Tests~~
- [ ] ~~Operating Electrical Tests~~
- [ ] ~~Pressure Test~~
- [ ] ~~Seat Tightness Test~~
- [ ] ~~Performance Test~~
- [A] Cleanliness
- [W] Packaging
- [ ] ~~Code Form~~
- [ ] ~~Painting~~
- [A] CERT. OF CONF.

DEVIATION NOTICES AND REMARKS (ALL DEVIATIONS HAVE BEEN APPROVED BY THE RESPONSIBLE WESTINGHOUSE ENGINEER UNLESS A SPECIFIC EXCEPTION IS STATED.)

THE SUPPLIER CERTIFIES that for the equipment and material released, all contractual requirements have been met. Approved deviations, if any, are listed above.

SUPPLIER SIGNATURE: Jimmy D. Sheem DATE: 7/29/80
TITLE:

The equipment shown hereon is released by W Quality Assurance. Shipment may be made subject to authorization by W Purchasing.

The equipment supplier has certified that the equipment above meets all requirements of the purchase order, drawings and specifications. Westinghouse has reviewed evidence supporting this release and except as specified above has detected no deviations from such requirements. This release does not waive any rights Westinghouse may have under the purchase order including Westinghouse's right to reject the equipment upon discovery of any such deviations after arrival at destination.

K.R. Moran 5-8-80
Westinghouse Quality Assurance Representative

134

REQUISITIONER

Tooling Specialists, Inc.
Certification Letter of Compliance

To: _____

Date: _____

Tooling Specialists, Inc. certifies that all purchase order requirements have been met for the following equipment and material. Any deviations from the order requirements have had Westinghouse NSD approval prior to shipment. Deviation Notice (D/N) numbers applicable are NA (N/A if not applicable).

Westinghouse Purchase Order Number 544 MKK 410650
P.O. Change Notice number(s) 00
Procurement Advisory Release (PAR) number(s) 00

P.O. Item #	Dwg. or Sketch and Rev. #	Base Mat'l & Heat #	Weld Joining Mat'l & Heat #	Cladding Mat'l and Heat #
004	6pc WC03 Rev 3	6-448		
005	1pc WC05 Rev 5	1971-12-1-2		
006	2pc WC04 Rev 4	01038		

weld joining procedure used NA
(include revision #)

cladding procedure used NA
(include revision #)

heat treating procedure used NA
(include revision #)

One copy each of the following documents as required by the purchase order are attached to this letter. All (including letter) are included with this shipment.

- ✓ Westinghouse Quality Release
- NA Base material mill test report(s)
- NA Weld operator certification
- NA Heat treat chart(s)
- ✓ Inspection Report
- NA Weld joining material mill test report
- NA Cladding material mill test report
- NA Other _____

One additional copy each of this letter and the above documents are hereby forwarded to the Westinghouse Buyer.

All records supporting this certification letter are available at Tooling Specialists.

Thomas D Shearer
(signature)

Tooling Specialists, Inc.

135

INSPECTION REPORT

Page 1 of 1

TOOLING SPECIALISTS, INC.
Latrobe, Pa. 15650
Phone: (412) 539-2534

Dwg. # W.P.S. 10 Rev. 7
W003 Rev 3

~~Revision~~ ~~Item~~

P. O. # Item #004
544-MXK-410650-RN

Work Order # 21729

CUSTOMER: W NES.

PART DESCRIPTION: (6) 10" SCH 120 SS, Calibration Blocks (HT.# 6-448)

IF OUT OF TOLERANCE, PLACE X IN BOX TO RIGHT OF DIMENSION.

DRAWING DIMENSIONS	Part No. A	X	Part No. B	X	Part No. C	X	Part No. D	X	Part No. E	X	Part No. F	X
Nom Wall "T" .844	.841		.874		.889		.865		.875		.864	
Hole Dia 3/32	.093		.093		.092		.093		.092		.092	
(1) 1/4 "T" hole	.210		.219		.222		.216		.219		.216	
(1) 3/4 "T" Hole	.630		.656		.667		.649		.656		.648	
Length 9" ±.250"	9.21"		9.21"		9.21"		9.21"		9.21"		9.21"	
A° - 60°	60°		60°		60°		60°		60°		60°	
B° - 9.56°	9.56°		9.56°		9.56°		9.56°		9.56°		9.56°	
B" - .897"	.897		.897		.897		.897		.897		.897	
C° - 10.10°	10.10°		10.10°		10.10°		10.10°		10.10°		10.10°	
C" - .947"	.947		.947		.947		.947		.947		.947	
E° - 5.33°	5.33°		5.33°		5.33°		5.33°		5.33°		5.33°	
E" - .5"	.5"		.5"		.5"		.5"		.5"		.5"	
F° - 6.47°	6.47°		6.47°		6.47°		6.47°		6.47°		6.47°	
F" - .5"	.5"		.5"		.5"		.5"		.5"		.5"	
(4) 1/2" depth of Holes	.5"		.5"		.5"		.5"		.5"		.5"	
(2) 1" Location Slots	1"		1"		1"		1"		1"		1"	
(4) 45° Notches	45°		45°		45°		45°		45°		45°	
D - 10% "T"	Ranges .080-.083		Ranges .083-.088		Ranges .085-.090		Ranges .084-.086		Ranges .084-.088		Ranges .082-.087	
(2) 1" Hole Locations	1"		1"		1"		1"		1"		1"	
(2) 1 1/2" Slot Locations	1.5"		1.5"		1.5"		1.5"		1.5"		1.5"	
Typ 1" Notch	1"		1"		1"		1"		1"		1"	

INSPECTOR: Thomas J. Jones 4-22-80

RECEIVING INSPECTOR:

W.D.S. 10 Rev. 8 04/26/79

NOM. PIPE SIZE"	SCHED ULE	NOM. WALL 'T'"	O.D."	HOLE DIAM ETER"	HOLES 1/4T	1/2T	3/4T	NOTCHES CIRC. O.D.	CIRC. I.D.	AXIAL O.D.	AXIAL I.D.	Length"	NOM. ARC A°	B°	B" (O.D.)	C°	C" (O.D.)	E°	E"& F"	F°
10	120	.844	10.75	3/32	1	-	1	X	X	X	X	9	60	9.56	.897	10.10	.947	5.33	.5	6.47

NOTE: Original dimensional requirements supplied to manufacturer.

General Data

1. E and F Dimension - minimum at bottom of notches (.500").
2. D Dimension - Typical all notches (10% of measured thickness) +.500" -.010".
3. A Dimension + to 360° and -.080" of arc.
4. Length +2" -.25".
5. Holes optional for T less than .8".
6. Flat blocks .8"T or less may contain 1/2T hole only.
7. Final acceptable dimensions to be based on intent.
8. Hole location to be based on actual "T".
9. Flat side of notches to be perpendicular notched surfaces, within 2°.
10. Side drilled holes to be within ± 1/32" tolerance.

Intent

1. C Dimension to be approximately 3/4" from edge of arc segment.
2. E and F dimension applicable to both sides of centerline so as to provide 1" long (at bottom) notches.
3. B Dimension to locate axial notches so as not to impose on end of hole at C location or on end of notches at centerline.
4. Circumferential reflectors to be positioned to allow 2T (Full Vee) calibration at 45° beam angle (not applicable for 1 1/2" Sch 80, 1 1/2" Sch 160, 2" Sch 80, 2" Sch 160, 3" Sch 40 & 3" Sch 80).
5. Circumferential holes and notches to be plus or minus .1" from ends.

Tooling Specialist
0145
Item 1

MATERIAL CERTIFICATION

NUCLEAR

Extrusion Facility

Curtiss-Wright Corporation

60 Grider Street • Buffalo, New York 14215

Revised & Reissued
DATE Dec. 14,1978

CUSTOMER GUYON ALLOYS, INC.
CUSTOMER P.O. A20620N
PART NUMBER 10.750" O.D. X .844" A.W. (Sch 120)
SALES ORDER NO. 3195
PART NAME Seamless Tubing
SPECIFICATIONS Type 304 (.04 Min Carbon)

CHEMICAL COMPOSITION	REQUIRED PERCENT	Mill Heat No. 6-448 C-W Code 3195-1-1 3195-2-1 3195-1-2 3195-2-2	
ELEMENT		Heat Treat Lot 10311	
CARBON	0.04 - 0.08	0.072	
MANGANESE	2.00 Max.	1.82	
SILICON	0.75 Max.	0.61	
CHROMIUM	18.0 - 20.0	18.50	
NICKEL	8.00 - 11.00	9.33	
PHOSPHOROUS	0.040 Max.	0.024	
SULPHUR	0.030 Max.	0.023	

TEST	TRANSVERSE	MECHANICAL PROPERTIES	
Tensile PSI	75,000 Min.	84,300	
Yield PSI	30,000 Min.	41,700	
Elong. % in 2 In.	20 Min.	57	
Flattening		OK	

☒ ASTM A-312 ☒ ASME SA-312
☐ ASTM A-376 ☐ ASME SA-376
☐ CW 1401-F

ASME Code Section III Class I 1977 Edition thru Winter 1977 Addenda.

Q. A. APPROVED
BY: Harry DATE: 12-18-7
GUYON ALLOYS, INC.

Marking paint or ink used to apply normal marks required by specifications did not contain low melting point elements such as lead, zinc, sulphur, copper and mercury, nor chlorides or other halides in other than trace amounts.

PARTS WERE HYDROSTATICALLY TESTED AT 2353 P.S.I. FOR A MINIMUM OF 5 SECONDS. NO DEFECTS NOTED

Parts were Ultrasonically tested to a 5% Notch in accordance with the 1977 Edition, including Addenda thru Winter 1977, of ASME Code Section III, Para. NB 2550 and were accepted.

Parts were annealed at 1950°F ± 25°F for 1/2 hour minimum at temperature and water quenched. to below 800°F in less than three minutes.

Parts were ground as a final cleaning operation.

We hereby certify to the chemical analysis, mechanical and other tests reported herein.

Supervisor of Metallurgy D. Rabenold

Sworn to before me this 25th day of October 1978. Patricia Bronzino, Notary Public, State of New York, Qualified in Erie County, My Commission expires March 30, 1980.

Patricia Bronzino

NEW YORK POWER AUTHORITY
INDIAN POINT NUCLEAR POWER PLANT
UNIT NO. 3
CALIBRATION BLOCKS

INDIAN POINT UNIT NO. 3 DESIGNATION	:	INT-15
COMPONENT/SYSTEM	:	10" SCH 100 PIPING
SIZE/SCHEDULE	:	10" SCH 100 .719"T
MATERIAL	:	A106 GRADE B CARBON STEEL
HEAT OR IDENTITY NUMBER	:	152177

ASME SECTION V AND XI 1983 EDITION THROUGH SUMMER 1983 ADDENDA REQUIREMENTS:

1. Section V : T-547
2. Section XI : III-3400
3. Material : A106 Grade B Carbon Steel
4. Size/Schedule: 10" SCH 100 .719"T

WESTINGHOUSE ELECTRIC CORPORATION - NSID - INSPECTION SERVICE DESIGN:

Calibration block was designed to meet intent of ASME Boiler and Pressure Vessel Code Section XI 1974 Edition through Summer 1975 Addenda.

RECOMMENDATION:

Calibration block follows the design and requirements of Section V and Section XI - 1983 Edition through Summer 1983 Addenda except for acr length of 95° instead of 60° as required by Figure T-547.1 and notch depth to 0.104T - 0.009T squared with tolerance of +10%-20% as required by Table III-3430-1. At this time there is no existing Class 2, 10" SCH 100 Carbon Steel Piping and this calibration block is not required.

NOTES:

1. WHEN MEASURED FROM EITHER SIDE OF CENTERLINE MINIMUM LENGTH AT BOTTOM OF AXIAL NOTCHES TO BE 0.5" AS SHOWN IN SIDE VIEW.
2. NOTCH DEPTH 10% OF MEASURED THICKNESS +0.005"-0.010".
3. PREP ALLOWED IN AREA OF SIDE DRILLED HOLE SHALL NOT INFRINGE ON HOLE SIZE REQUIREMENTS.
4. CIRCUMFERENTIAL HOLES AND NOTCHES TO BE PLUS OR MINUS 0.1" FROM ENDS.
5. LOCATE AXIAL NOTCHES SO AS NOT TO IMPOSE ON END OF HOLES OR ON END OF NOTCHES AT CENTERLINE.
6. FLAT SIDE OF NOTCHES TO BE PERPENDICULAR NOTCHED SURFACES, WITHIN 2°.
7. HOLE LOCATION TO BE BASED ON ACTUAL "T".
8. SIDE DRILLED HOLE DIAMETER TOLERANCE TO BE WITHIN ±0.03"
9. DRILL HOLES PERPENDICULAR TO RADIUS.
10. ARC DIMENSION +360° AND -0.080".
11. LENGTH TOLERANCE TO BE +2.00"-0.25"

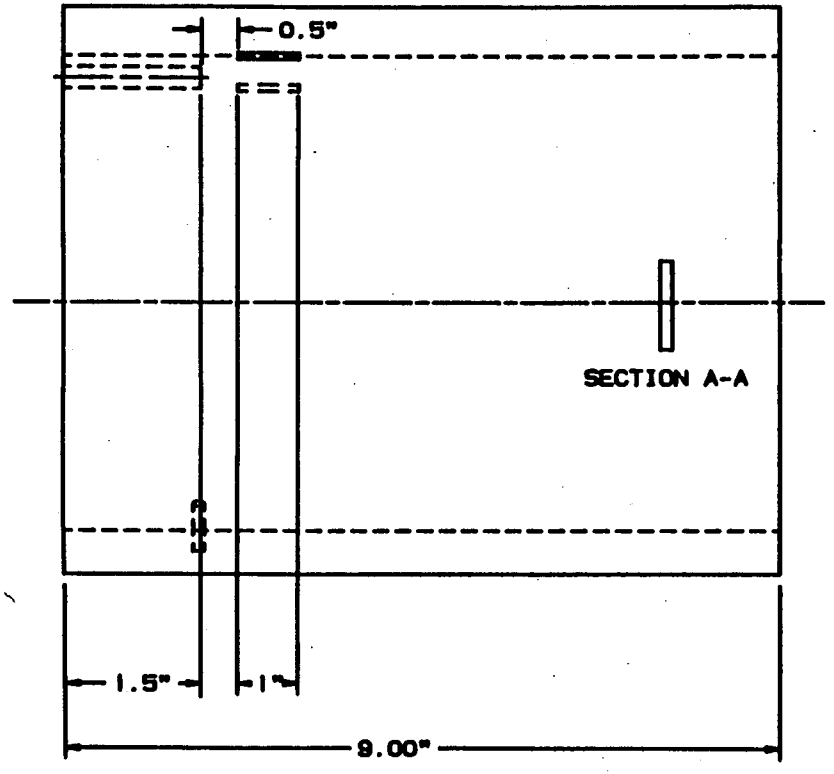

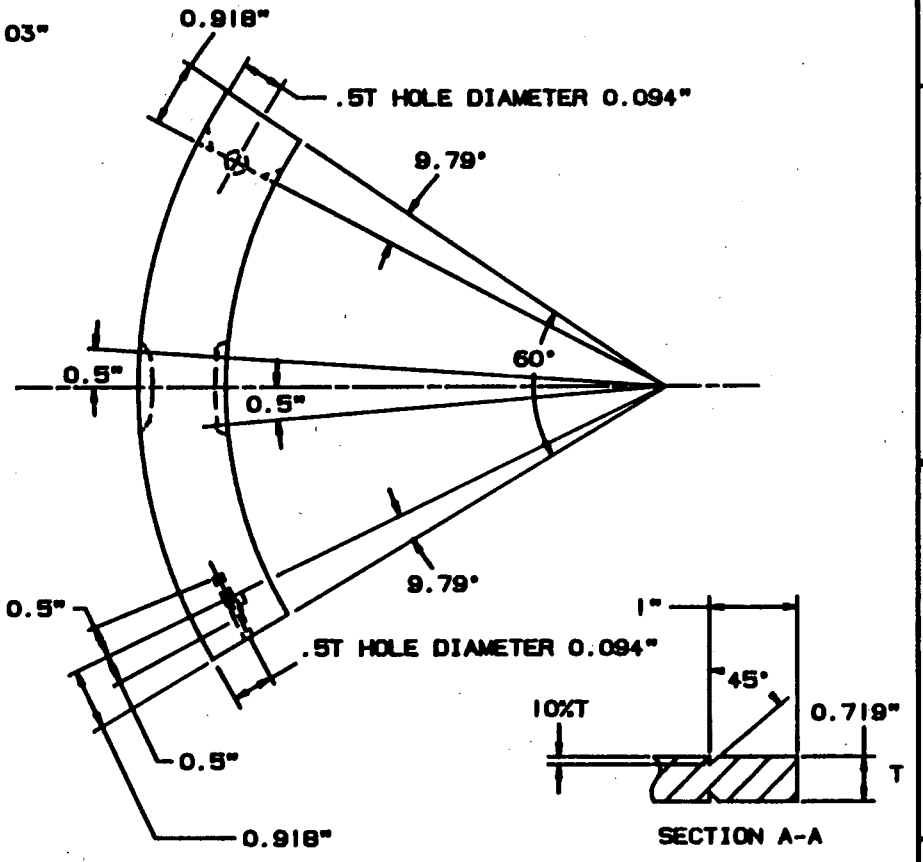

COMPUTER SYSTEM PLANT MODELING

NSSS TECHNICAL APPROVAL Phillip E. Burke	11-20-86	Westinghouse Electric Corporation PLANT ENGINEERING DIVISION - PITTSBURGH, PA
LEVEL III REVIEW David Kent	11-20-86	TITLE CALIBRATION BLOCK INT-15 10" SCH 100 PIPING 10" SCH 100 .719"T-D A106 GRADE B CARBON STEEL HEAT NO.: 152177
ENG		
ENG		
MGR		SIZE C SH. NO. REV.

REVISION

NSD PA1010

Nuclear Service Division
QUALITY RELEASE

QR- 1719 REV. O

PURCHASE ORDER	PART NAME	DRAWING & REV.
46203	UT Calibration Blocks	6003 Rev 1, 6004 Rev 4

PAR NO.	CHG. NOTICE NO.	P.O. ITEM NO.	PROJ./S.O. NO.	QTY. ON ORDER	QTY. RELEASED
	1	14-6	IIPN-9227	42	41

SUPPLIER	E. SPEC. & REV.	ORDER
Tray Specialists	N/A	COMPLETE ☑ YES ☐ NO.

SERIAL OR IDENTIFICATION NOS.
UT #114609 (A thru H), 152177 (A thru F), N13396 (A thru H), M7458 (A thru H), 103914 (B thru H), 05069 (A thru D)

The equipment shown hereon is released by W Quality Assurance. Shipment may be made subject to authorization by W Purchasing. In the Audit Checklist below, an A indicates acceptability, a C indicates a contingency and a W indicates that W QA has waived the auditing or witnessing of the attribute. All non-applicable items are lined out.

AUDIT CHECKLIST

☑ Material Certifications	~~Non-Operating Electrical Tests~~
~~Heat Treat Records~~	~~Operating Electrical Tests~~
~~RT Film and Records~~	~~Pressure Test~~
~~PT/MT Records~~	~~Seat Tightness Test~~
☑ Visual	~~Performance Test~~
☑ Dimensional	☑ Cleanliness
~~UT Records~~	☑ Packaging
~~Personnel Qualification: Welding, NDT~~	~~Code Form~~
	~~Painting~~
	☑ P.O.C.

DEVIATION NOTICES AND REMARKS (ALL DEVIATIONS HAVE BEEN APPROVED BY THE RESPONSIBLE WESTINGHOUSE ENGINEER UNLESS A SPECIFIC EXCEPTION IS STATED.)

THE SUPPLIER CERTIFIES that for the equipment and material released, all contractual requirements have been met. Approved deviations, if any, are listed above.

SUPPLIER SIGNATURE DATE

TITLE

The equipment shown hereon is released by Quality Assurance. Shipment may be made subject to authorization by Purchasing.

The equipment supplier has certified that the equipment above meets all requirements of the purchase order, drawings and specifications. Westinghouse has reviewed evidence supporting this release and except as specified above has detected no deviations from such requirements. This release does not waive any rights Westinghouse may have under the purchase order including Westinghouse's right to reject the equipment upon discovery of any such deviations after arrival at destination.

N R Moore 7-18-77

Westinghouse Quality Assurance Representative

SUPPLIER (ATTACH TO SHIPPING PAPERS)

TOOLING
SPECIALISTS
INCORPORATED

MACHINE TOOL BUILDERS — SPECIAL MACHINING — DIES — ENGINEERING SERVICE

P. O. BOX 251, LATROBE, PA. 15650 Phone: (412) 539-2534

LETTER OF COMPLIANCE

July 18, 1979

This is a statement of compliance to the requirements of Westinghouse Purchase Order Number 544-MXK-406203-RN.

All required processes, tests, and inspections have been performed. Inspection data sheets, heat treat charts, weld wire and material certifications are attached as required by the Purchase Order.

A listing of Purchase Order items in this shipment is attached.

Documented evidence of compliance supporting this certification is available at Tooling Specialists, Inc.

Sincerely yours,

Thomas D. Shearer

Thomas D. Shearer
Manager Special Products

TDS/sfz

INSPECTION REPORT

Page _____ of _____

TOOLING SPECIALISTS, INC.
Latrobe, Pa. 15650
Phone: (412) 539-2534

Dwg. #

Revision | Item

P. O. #

Work Order # 21-344

CUSTOMER:

PART DESCRIPTION:
10 Sch 100 H.T. # 152177

IF OUT OF TOLERANCE, PLACE X IN BOX TO RIGHT OF DIMENSION.

DRAWING DIMENSIONS		Part No. A	X	Part No. B	X	Part No. C	X	Part No. D	X	Part No. E	X	Part No. F
Nom. wall thickness		.784		.726		.695		.720		.780		.796
Cir. Notch	OD	.078		.072		.069		.072		.078		.079
	ID	.078		.072		.069		.072		.078		.079
Axial Notch	OD	.080		.076		.070		.069		.072		.078
	ID	.080		.076		.070		.069		.072		.078
Length		8.970		8.970		8.970		8.970		8.970		8.970
A°		60°		60°		60°		60°		60°		6°
1/16 dia.		3/32		3/32		3/32		3/32		3/32		3/32
1/2T hole, end		.403		.393		.365		.350		.358		.387
1/2T hole, side		.395		.363		.343		.354		.384		.399
	C	9°47'		9°47'		9°47'		9°47'		9°47'		9°47'
	E	5°19'		5°19'		5°19'		5°19'		5°19'		5°19'
	F	6°16'		6°16'		6°16'		6°16'		6°16'		6°16'

INSPECTOR: Thomas D. Shaw

RECEIVING INSPECTOR:

145

W.D.S. 10 Rev. 7 03/18/79

NOM. PIPE SIZE"	SCHED ULE	NOM. WALL 'T'"	O.D."	HOLE DIAM ETER"	HOLES 1/4T	1/2T	3/4T	NOTCHES CIRC. O.D.	CIRC. I.D.	AXIAL O.D.	AXIAL I.D.	Length"	NOM. ARC A°	B°	B" (O.D.)	C°	C" (O.D.)	E°	E"& F"	F°
10	100	.719	10.75	3/32	-	2	-	X	X	X	X	9	60	-	-	9.79	.918	5.33	.5	6.27

NOTE: Original dimensional requirements supplied to manufacturer.

General Data

1. E and F Dimension - minimum at bottom of notches (.500").
2. D Dimension - Typical all notches (10% of measured thickness) +.500" -.010".
3. A Dimension + to 360° and -.080" of arc.
4. Length +2" -.25".
5. Holes optional for T less than .8".
6. Flat blocks .8"T or less may contain 1/2T hole only.
7. Final acceptable dimensions to be based on intent.
8. Hole location to be based on actual "T".
9. Flat side of notches to be perpendicular notched surfaces, within 2°.
10. Side drilled holes to be within ± 1/32" tolerance.

Intent

1. C Dimension to be approximately 3/4" from edge of arc segment.
2. E and F dimension applicable to both sides of centerline so as to provide 1" long (at bottom) notches.
3. B Dimension to locate axial notches so as not to impose on end of hole at C location or on end of notches at centerline.
4. Circumferential reflectors to be positioned to allow 2T (Full Vee) calibration at 45° beam angle (not applicable for 1 1/2" Sch 80, 1 1/2" Sch 160, 2" Sch 80, 2" Sch 160, 3" Sch 40 & 3" Sch 80).
5. Circumferential holes and notches to be plus or minus .1" from ends.

146

FORM [illegible]-80 (6/62)

ARMCO

ARMCO STEEL CORPORATION
AMBRIDGE WORKS
Ambridge, Pennsylvania

10" 5/100 A 106 G-B.

REPORT OF TESTS

CUSTOMER Capitol Pipe and Steel Products Inc.

DATE 8-11-75

SPECIFICATION ASTM A-106-74 / ASME SA-106

OUR ORDER NO. 002442900-0325

MATERIAL Smls Gr. B Steel Pipe

CUSTOMER'S ORDER NO. 74929

IDENTIFICATION	TENSILE TESTS			HYDRO TEST PSI	HEAT NUMBER	ANALYSIS							
	YIELD PSI	ULTIMATE PSI	% ELONG. IN 2 IN.			C	Mn	P	S	Si	Ni	Cr	Mo
10 3/4 x .718	40200	71700	40.0	2800	152177	.23	.84	.013	.018	.17			
						.24	.85	.012	.019	.18			
Flattening Tests			OK										

Tooling Specialists
0616
R9-1444A
P46845

THE CHEMICAL ANALYSES AND PHYSICAL OR MECHANICAL TESTS REPORTED ABOVE ARE CORRECT AS CONTAINED IN THE RECORDS OF THE CORPORATION.

ARMCO STEEL CORPORATION

William M. Ewing

NEW YORK POWER AUTHORITY
INDIAN POINT NUCLEAR POWER PLANT
UNIT NO. 3
CALIBRATION BLOCKS

INDIAN POINT UNIT NO. 3 DESIGNATION	:	INT-16R1
COMPONENT/SYSTEM	:	10" SCH 40S RHR AND ACCUMULATOR DISCHARGE PIPING
SIZE/SCHEDULE	:	10" SCH 40S .365"T
MATERIAL	:	A312 TP316 STAINLESS STEEL
HEAT OR IDENTITY NUMBER	:	TH5796

ASME SECTION V AND XI 1983 EDITION THROUGH SUMMER 1983 ADDENDA REQUIREMENTS:

1. Section V : T-110 and T-548
2. Section XI : Article III-1100, Supplement 7 and IMA-2250
3. Material : A312 TP304 Stainless Steel
4. Size/Schedule: 10" SCH 40S .365"T

WESTINGHOUSE ELECTRIC CORPORATION - NSID - INSPECTION SERVICE DESIGN:

Calibration block was designed to meet intent of ASME Boiler and Pressure Vessel Code Section XI 1974 Edition through Summer 1975 Addenda.

RECOMMENDATION:

Calibration block design follows the guidelines of Section V and Section XI - 1983 Edition through Summer 1983 Addenda for Austenitic Piping. Class 2 Piping less than or equal to 1/2 inch thickness no longer requires volumetric examination per the requirements of Section XI 1983 Edition through Summer 1983 Addenda. Modifications of this design to meet the requirements of Section V and Section XI 1983 Edition through Summer 1983 Addenda for "ferritic piping and design T-547.1" would be to increase length to 8" and arc length to 95° and as required by Table III-3430-1 notch depth to 0.104T - 0.009T squared with tolerance of +10%-20%. P-Number Groupings for Materials A312 TP316 Stainless Steel and A312 TP304 Stainless Steel are equivalent.

NOTES:

1. WHEN MEASURED FROM EITHER SIDE OF CENTERLINE MINIMUM LENGTH AT BOTTOM OF AXIAL NOTCHES TO BE 0.5" AS SHOWN IN SIDE VIEW.
2. NOTCH DEPTH 10% OF MEASURED THICKNESS +0.005"-0.010".
3. PREP ALLOWED IN AREA OF SIDE DRILLED HOLE SHALL NOT INFRINGE ON HOLE SIZE REQUIREMENTS.
4. CIRCUMFERENTIAL HOLES AND NOTCHES TO BE PLUS OR MINUS 0.1" FROM ENDS.
5. LOCATE AXIAL NOTCHES SO AS NOT TO IMPOSE ON END OF HOLES OR ON END OF NOTCHES AT CENTERLINE.
6. FLAT SIDE OF NOTCHES TO BE PERPENDICULAR NOTCHED SURFACES, WITHIN 2°.
7. HOLE LOCATION TO BE BASED ON ACTUAL "T".
8. SIDE DRILLED HOLE DIAMETER TOLERANCE TO BE WITHIN ±0.03"
9. DRILL HOLES PERPENDICULAR TO RADIUS.
10. ARC DIMENSION +360° AND 0.080".
11. LENGTH TOLERANCE TO BE +2.00"-0.25"

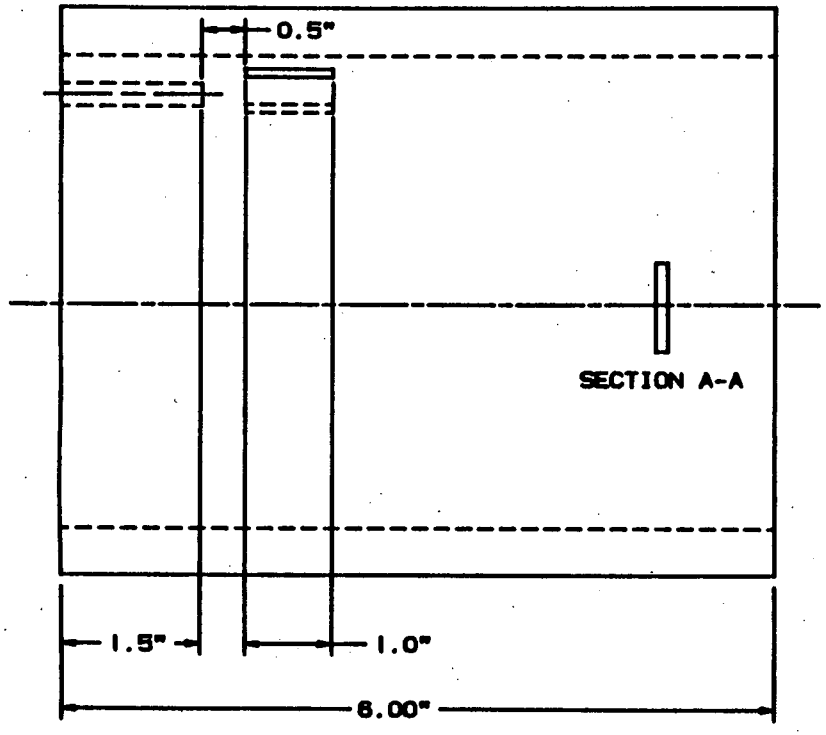

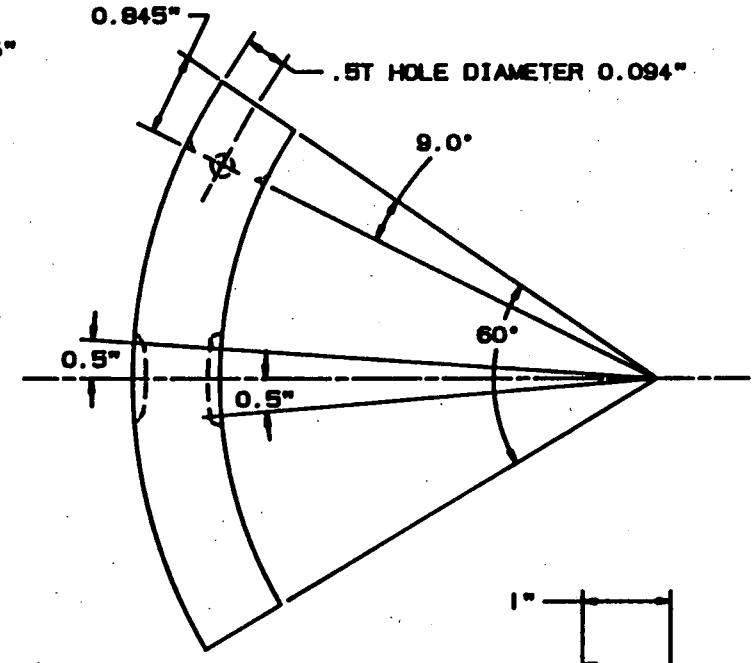

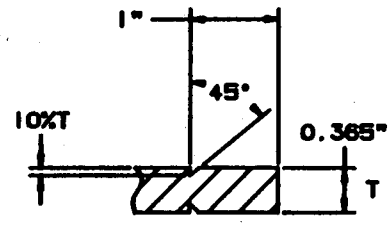

SECTION A-A

COMPUTER SYSTEM PLANT MODELING

NSSD TECHNICAL APPROVAL Phillip C. Burkus	11-20-86	Westinghouse Electric Corporation PLANT ENGINEERING DIVISION - PITTSBURGH, PA
LEVEL III REVIEW David Kunk	11-20-86	TITLE CALIBRATION BLOCK INT-16R1 10" SCH 40S RHR AND ACCUMULATOR DISCHARGE PIPING 10" SCH 40S .365"T-A A312 TP316 STAINLESS STEEL HEAT NO.: TH5796
ENG		
ENG		
MGR		SIZE C DWG. NO. REV.

REVISION

NSD PA1010

Nuclear Service Division
QUALITY RELEASE

QR— 3874 REV. 0

PURCHASE ORDER	PART NAME	DRAWING & REV.
544-435565	CALIBRATION BLOCKS	SEE BELOW

PAR NO	CHG. NOTICE NO	P.O. ITEM NO.	PROJ./S.O. NO.	QTY. ON ORDER	QTY. RELEASED
—	—	001 + 002	IMSN-9527	J1 001 6 EA J1 002 4 EA	J1 001 6 EA J1 002 4 EA

SUPPLIER	E. SPEC. & REV.	ORDER
TOOLING SPECIALISTS INC	N/A	COMPLETE ☒ YES ☐ NO

SERIAL OR IDENTIFICATION NOS.

J1 001 6 EA 360°, 7" L SCH 40S TO W 005 REV 6

J1 002 4 EA W MATL 8" SCH 160 SA 160 GR B TO N 005 REV 3 HT # 30465

The equipment shown hereon is released by W Quality Assurance. Shipment may be made subject to authorizaiton by W Purchasing. In the Audit Checklist below, an A indicates acceptability, a C indicates a contingency and a W indicates that W QA has waived the auditing or witnessing of the attribute. All non-applicable items are lined out.

AUDIT CHECKLIST

[A] Material Certifications	[ ] ~~Non-Operating Electrical Tests~~
[ ] ~~Heat Treat Records~~	[ ] ~~Operating Electrical Test~~
[ ] ~~RT Film and Records~~	[ ] ~~Pressure Test~~
[ ] ~~PT/MT Records~~	[ ] ~~Seat Tightness Test~~
[A] Visual	[ ] ~~Performance Test~~
[A] Dimensional	[A] Cleanliness
[ ] ~~UT Records~~	[A] Packaging
[ ] ~~Personnel Qualification: Welding, NDT~~	[ ] ~~Code Form~~
[A] CERTIFICATE OF COMPLIANCE	[ ] ~~Painting~~
[ ]	[ ]

DEVIATION NOTICES AND REMARKS (ALL DEVIATIONS HAVE BEEN APPROVED BY THE RESPONSIBLE WESTINGHOUSE ENGINEER UNLESS A SPECIFIC EXCEPTION IS STATED.)

THE SUPPLIER CERTIFIES that for the equipment and material released, all contractual requirements have been met. Approved deviations, if any, are listed above.

SUPPLIER SIGNATURE: Ronald Fuhrman DATE: 11-12-87

TITLE: QC Coordinator

The equipment shown hereon is released by W Quality Assurance. Shipment may be made subject to authorization by W Purchasing.

The equipment supplier has certified that the equipment above meets all requirements of the purchase order, drawings and specifications. Westinghouse has reviewed evidence supporting this release and except as specified above has detected no deviations from such requirements. This release does not waive any rights Westinghouse may have under the purchase order including Westinghouse's right to reject the equipment upon discovery of any such deviations after arrival at destination.

J. D. R. Waring 11/12/82

Westinghouse Quality Assurance Representative

REQUISITIONER

TOOLING SPECIALISTS, INC.
CERTIFICATION LETTER OF COMPLIANCE

TO: Westinghouse Electric Corp.
Nuclear Energy Systems
P.O. Box 355
Pittsburgh, Pennsylvania 15230

DATE: November 12, 1982

Tooling Specialists, Inc. certifies that all purchase order requirements have been met for the following equipment and material. Any deviations from the order requirements have had Westinghouse NSD approval prior to shipment. Deviation Notice (D/N) numbers applicable are NA (N/A if not applicable).

Westinghouse Purchase Order Number 544-MXS-435565
P.O. Change Notice number (s)
Procurement Advisory Release (PAR) number (s)

Quantity	P.O. Item #	DWG. or Sketch and Rev. #	Base Mat'l & Heat #	Weld Joining Mat'l & Heat #	Cladding Mat and Heat #
6	001	W005 Rev 6	50465		
4	002	W003 Rev 3	TH5796		

weld joining procedure used NA (include revision #)

cladding procedure used NA (include revision #)

heat treating procedure used NA (include revision #)

One copy each of the following documents as required by the purchase order are attached to this letter. All (including letter) are included with this shipment.

- ✓ Westinghouse Quality Release
- ✓ Base material mill test report (s)
- Weld operator certification
- Heat treat chart (s)
- ✓ Inspection Report
- Weld joining material mill test report
- Cladding material mill test report
- ✓ Other Letter of Compliance

One additional copy each of this letter and the above documents are hereby forwarded to the Westinghouse Buyer.

All records supporting this certification letter are available at Tooling Specialists.

Thomas G. Shearer Jr.
(signature)

Tooling Specialists, Inc.

INSPECTION REPORT

Page 1 of 1

TOOLING SPECIALISTS, INC.
Latrobe, Pa. 15650
Phone: (412) 539-2534

Dwg. # W 005 | Revision 6 | Item
P. O. # 54-435565 Item #01 | Work Order # 24381

CUSTOMER: WNES

PART DESCRIPTION: 6 Calibration Blocks 10" Sch #05 .365T A312 TP316 Stainless Steel

IF OUT OF TOLERANCE, PLACE X IN BOX TO RIGHT OF DIMENSION.

DRAWING DIMENSIONS	Part No. A	X	Part No. B	X	Part No. C	X	Part No. D	X	Part No. E	X	Part No. F	X
Nom. Wall "T" .365	.385"		.376"		.394"		.373"		.380"		.382"	
3/32 Hole dia.	.094"		.094"		.094"		.094"		.094"		.094"	
L = 6" ±2" .250"	7.02"		7.02"		7.02"		7.01"		7.01"		7.01"	
A° - 60°	60°		60°		60°		60°		60°		60°	
C° - 9°	9°		9°		9°		9°		9°		9°	
C" - .845"	.845"		.845"		.845"		.845"		.845"		.845"	
E° - 5.33°	5.33°		5.33°		5.33°		5.33°		5.33°		5.33°	
E" - .5"	.50"		.50"		.50"		.50"		.50"		.50"	
F° - 5.77°	5.77°		5.77°		5.77°		5.77°		5.77°		5.77°	
F" - .5"	.50"		.50"		.50"		.50"		.50"		.50"	
½T - Hole	.19"		.18"		.19"		.18"		.19"		.19"	
(2) 1" To Notches	1.00"		1.00"		1.00"		1.00"		1.00"		1.00"	
(4) 45° Notches	45°		45°		45°		45°		45°		45°	
1½" Depth of Hole	1.50"		1.50"		1.50"		1.50"		1.50"		1.50"	
(2) ½" to notches	.50"		.50"		.50"		.50"		.50"		.50"	
(2) 1" Length of notches	1.00"		1.00"		1.00"		1.00"		1.00"		1.00"	
"D" - 10% T ±.005 ±.010	Range .029-.033		Range .029-.038		Range .030-.035		Range .028-.033		Range .030-.032		Range .030-.033	

INSPECTOR: [illegible] 11-11-82

RECEIVING INSPECTOR:

152

W.D.S. 10 Rev. 13 07/30/82

NOM. PIPE SIZE"	SCHED ULE	NOM. WALL 'T'"	O.D."	HOLE DIAM ETER"	HOLES 1/4T	1/2T	3/4T	NOTCHES CIRC. O.D.	CIRC. I.D.	AXIAL O.D.	AXIAL I.D.	Length"	NOM. ARC A°	B°	B" (O.D.)	C°	C" (O.D.)	E°	E"& F"	F°
10	40S	.365	10.75	3/32	-	1	-	X	X	X	X	6	60	-	-	9.0	.845	5.33	.5	5.77

NOTE: Original dimensional requirements supplied to manufacturer.

General Data

1. E and F Dimension - minimum at bottom of notches (.500").
2. D Dimension - Typical all notches (10% of measured thickness) +.500" -.010".
3. A Dimension + to 360° and -.080" of arc.
4. Length +2" -.25".
5. Holes optional for T less than .8".
6. Flat blocks .8"T or less may contain 1/2T hole only.
7. Final acceptable dimensions to be based on intent.
8. Hole location to be based on actual "T".
9. Flat side of notches to be perpendicular notched surfaces, within 2°.
10. Side drilled holes to be within ± 1/32" tolerance.

Intent

1. C Dimension to be approximately 3/4" from edge of arc segment.
2. E and F dimension applicable to both sides of centerline so as to provide 1" long (at bottom) notches.
3. B Dimension to locate axial notches so as not to impose on end of hole at C location or on end of notches at centerline.
4. Circumferential reflectors to be positioned to allow 2T (Full Vee) calibration at 45° beam angle (not applicable for 1 1/2" Sch 80, 1 1/2" Sch 160, 2" Sch 80, 2" Sch 160, 3" Sch 40 & 3" Sch 80).
5. Circumferential holes and notches to be plus or minus .1" from ends.

153

THESE MILL TEST REPORTS APPLY TO:
YOUR P. O. # 7208
TIOGA PIPE SUPPLY CO., INC.

Report No. 67245

STAINLESS STEEL PIPE AND TUBING

INSPECTION REPORT

Messrs.

TP316 SMLS Hot Finished Pipe, ASTM A312-70a ASME SA312 ASTM A376-70 ASME SA376 & to the

Spec. Intergranular Corrosion Test of MIL-P-1144B Date

Manufacturing No.	Material	Size	Quantity Pcs	Heat No.	Chemical Composition (%) C	Si	Mn	P	S	Ni	Cr	Mo	Co
					Max. 0.08	Max. 0.75	Max. 2.00	Max. 0.030	Max. 0.030	11.00 14.00	16.00 18.00	2.00 3.00	
X 7711 2	TP316	10" x Sch. 40S x 18.5'	1	TH5796	0.05	0.61	1.77	0.030	0.013	11.57	16.73	2.16	0.24
		" x " x 16.5'	2										
		" x " x 15.5'	1										
		" x " x 8.0'	1										
		" x " x 7.0'	2										
		" x " x 6.0'	1										

Surface & Dimensions	Pressure Test (Water, Air)	Reverse Flatten Test	Reverse Bend Test	Flare Test	Tension Test: Flange Test	Yield Point PSI	Tensile Strength PSI	Elongation (%)	Hardness Test (HV)
	1087 PSI					Min.30,000	Min.75,000	Min.35	
Good	Good	Good				44,500	82,400	65	

TIOGA PIPE
QA ACCEPTANCE
BY
DATE 10/12/88

Corrosion Tested & Accepted Per MIL-P-1144B
Final Cleaning : Pickled
Solution Treatment : Holding Temp. 1100°C Holding Time 2 minutes(min.)
Cooling : Water Quenching

Chief Inspector

NEW YORK POWER AUTHORITY
INDIAN POINT NUCLEAR POWER PLANT
UNIT NO. 3
CALIBRATION BLOCKS

INDIAN POINT UNIT NO. 3 DESIGNATION	:	INT-17
COMPONENT/SYSTEM	:	8" SCH 160 RHR PIPING AND REGENERATIVE HEAT EXCHANGER
SIZE/SCHEDULE	:	8" SCH 160 .906"T
MATERIAL	:	A312 TP304 STAINLESS STEEL
HEAT OR IDENTITY NUMBER	:	2626-8-1

ASME SECTION V AND XI 1983 EDITION THROUGH SUMMER 1983 ADDENDA REQUIREMENTS:

1. Section V : T-110 and T-548
2. Section XI : Article III-1100, Supplement 7 and IMA-2250
3. Material : RHR Piping: A376 TP316 Stainless Steel; Regenerative Heat Exchanger: A213 TP304 Stainless Steel
4. Size/Schedule: RHR Piping 8" SCH 160 .906"T; Regenerative Heat Exchanger 9.25" - .875"T

WESTINGHOUSE ELECTRIC CORPORATION - NSID - INSPECTION SERVICE DESIGN:

Calibration block was designed to meet intent of ASME Boiler and Pressure Vessel Code Section XI 1974 Edition through Summer 1975 Addenda.

RECOMMENDATION:

Calibration block design follows the guidelines of Section V and Section XI - 1983 Edition through Summer 1983 Addenda for Austenitic Piping. Use of 8" SCH 160 is nearest piping diameter and thickness available for Regenerative Heat Exchanger Requirements. Modifications of this design to meet the requirements of Section V and Section XI 1983 Edition through Summer 1983 Addenda for "ferritic piping and design T-547.1" would be to increase arc length to 120° and as required by Table III-3430-1 notch depth to 0.104T - 0.009T squared with tolerance of +10%-20%. P-Number Groupings for Materials A312 TP304 Stainless Steel, A376 TP316 Stainless Steel and A213 TP304 Stainless Steel are equivalent.

NOTES:

1. WHEN MEASURED FROM EITHER SIDE OF CENTERLINE MINIMUM LENGTH AT BOTTOM OF AXIAL NOTCHES TO BE 0.5" AS SHOWN IN SIDE VIEW.
2. NOTCH DEPTH 10% OF MEASURED THICKNESS +0.005"-0.010".
3. PREP ALLOWED UN AREA OF SIDE DRILLED HOLE SHALL NOT INFRINGE ON HOLE SIZE REQUIREMENTS.
4. CIRCUMFERENTIAL HOLES AND NOTCHES TO BE PLUS OR MINUS 0.1" FROM ENDS.
5. LOCATE AXIAL NOTCHES SO AS NOT TO IMPOSE ON END OF HOLES OR ON END OF NOTCHES AT CENTERLINE.
6. FLAT SIDE OF NOTCHES TO BE PERPENDICULAR NOTCHED SURFACES, WITHIN 2°.
7. HOLE LOCATION TO BE BASED ON ACTUAL "T".
8. SIDE DRILLED HOLE DIAMETER TOLERANCE TO BE WITHIN ±0.03"
9. DRILL HOLES PERPENDICULAR TO RADIUS.
10. ARC DIMENSION +360° AND -0.080".
11. LENGTH TOLERANCE TO BE +2.00"-0.25"

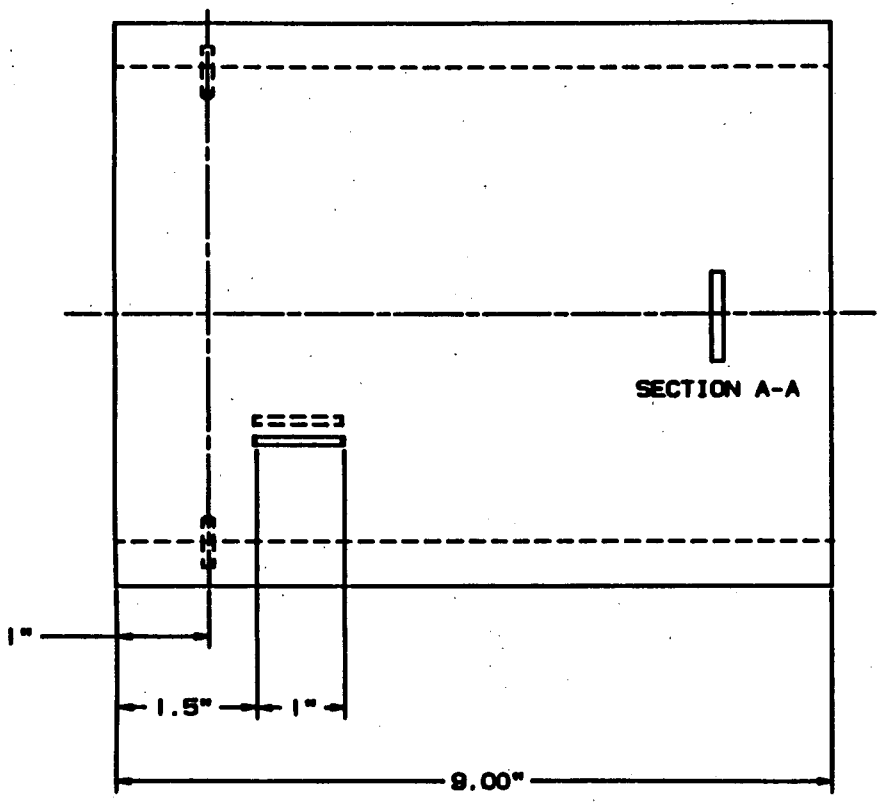

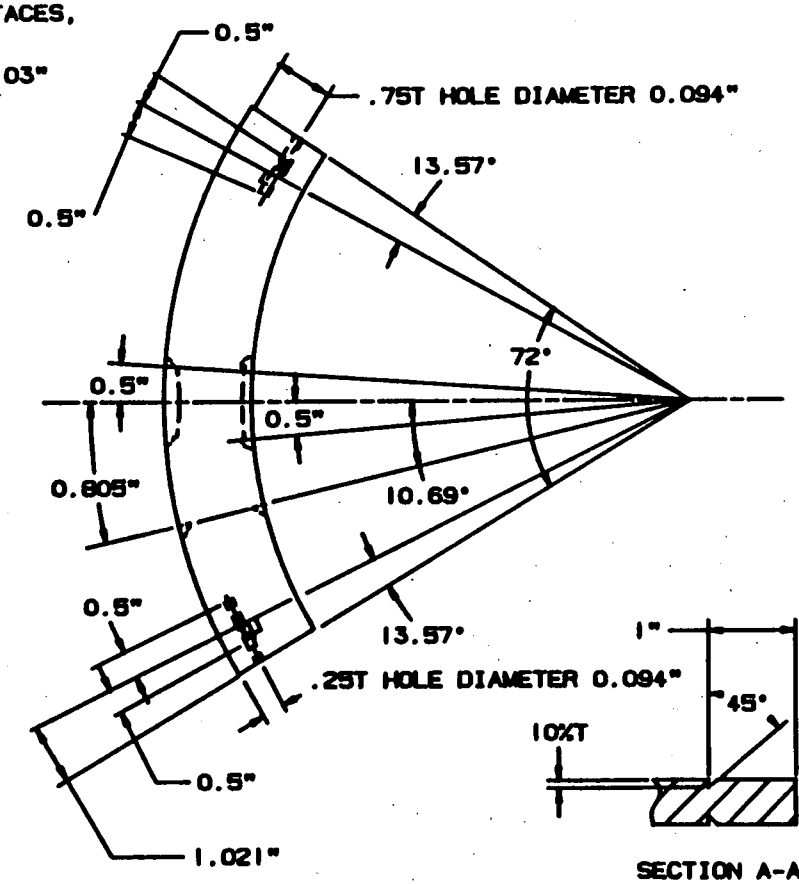

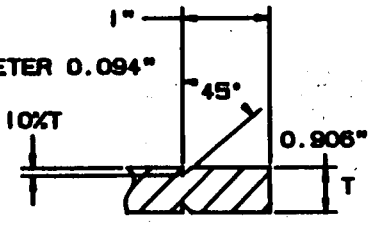

SECTION A-A

COMPUTER SYSTEM PLANT MODELING

MECH. TECHNOLOGICAL APPROVAL Phillip C. Burke	11-26-86	Westinghouse Electric Corporation PLANT ENGINEERING DIVISION - PITTSBURGH, PA
LEVEL III REVIEW David Kurf	11-26-86	TITLE CALIBRATION BLOCK INT-17 8" SCH 160 RHR AND REGENERATIVE HEAT EXCHANGER 8" SCH 160 .906"T-A A312 TP304 STAINLESS STEEL HEAT NO.: 538639 IDENTITY NO.: 2626-8-1
ENG		
ENG		
MER		C SH. NO. REV.

REVISION

DT. d. B.

NSD PA1010

Nuclear Service Division
QUALITY RELEASE

QR- 1623 REV. 0

PURCHASE ORDER	PART NAME	DRAWING & REV
294103	Calibration Blocks	#003 Rev 3, #004 Rev 4, #005 Rev 5, #006 Rev 6, #007 Rev 1

PAR NO.	CHG. NOTICE NO.	P.O. ITEM NO.	PROJ./S.O. NO.	QTY. ON ORDER	QTY. RELEASED
0	1	1 thru 6, 8 thru 15	#ISN-9327/IPEN-9327	65	59

SUPPLIER	E. SPEC. & REV.	ORDER
Tooling Specialists	N/A	COMPLETE ☐ YES ☑ NO

SERIAL OR IDENTIFICATION NOS.

HT #: 30106 (6 pieces), NN7B (A thru F), N7212 (A & B), 182 (A thru H), 8051726 (A thru H), M9948 (A thru D), 2626-8-1 (A thru E), 245865 (A thru H), 534982 (A thru F), 2633-13-1 (A thru F).

The equipment shown hereon is released by W Quality Assurance. Shipment may be made subject to authorization by W Purchasing. In the Audit Checklist below, an A indicates acceptability, a C indicates a contingency and a W indicates that W QA has waived the auditing or witnessing of the attribute. All non-applicable items are lined out.

AUDIT CHECKLIST

- [A] Material Certifications
- ~~[ ] Heat Treat Records~~
- ~~[ ] RT Film and Records~~
- ~~[ ] PT/MT Records~~
- [A] Visual
- [A] Dimensional
- ~~[ ] UT Records~~
- ~~[ ] Personnel Qualification: Welding, NDT~~
- ~~[ ]~~
- ~~[ ]~~
- ~~[ ] Non-Operating Electrical Tests~~
- ~~[ ] Operating Electrical Test~~
- ~~[ ] Pressure Test~~
- ~~[ ] Seat Tightness Test~~
- ~~[ ] Performance Test~~
- [A] Cleanliness
- [N] Packaging
- ~~[ ] Code Form~~
- ~~[ ] Painting~~
- [A] C.o.F.C.

DEVIATION NOTICES AND REMARKS (ALL DEVIATIONS HAVE BEEN APPROVED BY THE RESPONSIBLE WESTINGHOUSE ENGINEER UNLESS A SPECIFIC EXCEPTION IS STATED.)

Six of the above blocks to be shipped to IPP.
S/N's: IPP-8, IPP-11, IPP-27, IPP-34, IPP-35, IPP-36.

THE SUPPLIER CERTIFIES that for the equipment and material released, all contractual requirements have been met. Approved deviations, if any, are listed above.

SUPPLIER SIGNATURE: Thomas Thomas DATE: 6/29/79
TITLE:

The equipment shown hereon is released by Quality Assurance. Shipment may be made subject to authorization by Purchasing.

The equipment supplier has certified that the equipment above meets all requirements of the purchase order, drawings and specifications. Westinghouse has reviewed evidence supporting this release and except as specified above has detected no deviations from such requirements. This release does not waive any rights Westinghouse may have under the purchase order including Westinghouse's right to reject the equipment upon discovery of any such deviations after arrival at destination.

K.R. Moran 6-29-79
Westinghouse Quality Assurance Representative

REQUISITIONER

TOOLING SPECIALISTS INCORPORATED

MACHINE TOOL BUILDERS — SPECIAL MACHINING — DIES — ENGINEERING SERVICE

P. O. Box 251, Latrobe, Pa. 15650 Phone: (412) 539-2534

LETTER OF COMPLIANCE

June 29, 1979

This is a statement of compliance to the requirements of Westinghouse Purchase Order Number 544-MXK-294103-RN.

All required processes, tests, and inspections have been performed. Inspection data sheets, heat treat charts, weld wire and material certifications are attached as required by the Purchase Order.

A listing of Purchase Order items in this shipment is attached.

Documented evidence of compliance supporting this certification is available at Tooling Specialists.

Sincerely yours,

Thomas D. Shearer

Thomas D. Shearer
Manager Special Products

TDS:keo

2" Sch 160 Material has not been received yet

157

INSPECTION REPORT

Page _____ of _____

TOOLING SPECIALISTS, INC.
Latrobe, Pa. 15650
Phone: (412) 539-2534

Dwg. #

Revision | Item

P. O. #

Work Order # 21-235

CUSTOMER:

PART DESCRIPTION: 8 Sch 160 HT 2626-8-1

IF OUT OF TOLERANCE, PLACE X IN BOX TO RIGHT OF DIMENSION.

DRAWING DIMENSIONS		Part No. A	X	Part No. B	X	Part No. C	X	Part No. D	X	Part No. E	X	Part No.	X
Nom. wall Thickness		.847		.860		.902		.904		.881			
Cir. Notch	OD	.084		.086		.090		.090		.088			
	ID	.085		.086		.090		.090		.088			
Axial	OD	.084		.087		.091		.089		.086			
	ID	.084		.087		.091		.089		.086			
Length		9.065		9.065		9.065		9.065		9.065			
A°		72°		72°		72°		72°		72°			
1/4 T hole		.211		.211		.220		.226		.221			
3/4 T hole		.630		.651		.677		.673		.645			
Hole size		1/8		1/8		1/8		1/8		1/8			
	C	13°34'		13°34'		13°34'		13°34'		13°34'			
	B	10°41'		10°41'		10°41'		10°41'		10°41'			
	E	6°38'		6°38'		6°38'		6°38'		6°38'			
	F	8°42'		8°42'		8°42'		8°42'		8°42'			

INSPECTOR: Thomas Shower

RECEIVING INSPECTOR:

W.D.S. 10 Rev. 8 04/26/79

NOM. PIPE SIZE"	SCHED ULE	NOM. WALL 'T'"	O.D."	HOLE DIAM ETER"	HOLES 1/4T	HOLES 1/2T	HOLES 3/4T	NOTCHES CIRC. O.D.	NOTCHES CIRC. I.D.	NOTCHES AXIAL O.D.	NOTCHES AXIAL I.D.	NOTCHES Length"	NOM. ARC A°	B°	B" (O.D.)	C°	C" (O.D.)	E°	E"& F"	F°
8	160	.906	8.625	3/32	1	–	1	X	X	X	X	9	72	10.69	.805	13.57	1.021	6.64	.5	8.70

NOTE: Original dimensional requirements supplied to manufacturer.

General Data

1. E and F Dimension – minimum at bottom of notches (.500").
2. D Dimension – Typical all notches (10% of measured thickness) +.500" –.010".
3. A Dimension + to 360° and –.080" of arc.
4. Length +2" –.25".
5. Holes optional for T less than .8".
6. Flat blocks .8"T or less may contain 1/2T hole only.
7. Final acceptable dimensions to be based on intent.
8. Hole location to be based on actual "T".
9. Flat side of notches to be perpendicular notched surfaces, within 2°.
10. Side drilled holes to be within ± 1/32" tolerance.

Intent

1. C Dimension to be approximately 3/4" from edge of arc segment.
2. E and F dimension applicable to both sides of centerline so as to provide 1" long (at bottom) notches.
3. B Dimension to locate axial notches so as not to impose on end of hole at C location or on end of notches at centerline.
4. Circumferential reflectors to be positioned to allow 2T (Full Vee) calibration at 45° beam angle (not applicable for 1 1/2" Sch 80, 1 1/2" Sch 160, 2" Sch 80, 2" Sch 160, 3" Sch 40 & 3" Sch 80).
5. Circumferential holes and notches to be plus or minus .1" from ends.

8". 160 H 312 TP 304/304H

Yn.

☒ ASTM A-312 ☒ ASME SA-312
☐ ASTM A-376 ☐ ASME SA-376
☐ CW 1401-F

Extrusion Facility

Curtiss-Wright Corporation

60 Grider Street • Buffalo, New York 14215

DATE Nov. 13, 1975

OMER CAPITOL PIPE & STEEL PRODUCTS, INC.

CUSTOMER P.O. 71619-00N

NUMBER 8.625" O.D. x .906" A.W. (Sch 160)

SALES ORDER NO. 2626

NAME PRESSURE TUBING

SPECIFICATIONS TYPE 304/304H

	REQUIRED	MILL HEAT NO. 535639 C.W. Code 2626	MILL HEAT NO. C.W. Code
ELEMENT		HEAT LOT NO. 6995	HEAT LOT NO.
ON	0.04 - 0.08	MILL 0.06	Check 0.07
ANESE	2.00 MAX.	1.41	1.44
ON	0.75 MAX.	0.44	0.42
MIUM	18.0-20.0	18.16	18.25
	8.00-11.00	8.32	8.35
HORUS	0.040 MAX.	0.020	0.018
UR	0.030 MAX.	0.015	0.017
TEST	TRANSVERSE	PHYSICAL PROPERTIES	
E, PSI	75,000	83,200	
TSI	30,000 MIN.	41,500	
, % IN 2 IN.	20 MIN.	63	
NING		OK	

This certificate covers the following piece Nos.

2626-3-1
2626-3-2
2626-8-1
2626-8-2

Tooling Spec.
R9-1245A
H96792
0351

S WERE HYDROSTATICALLY TESTED AT 2800 P.S.I. FOR A MINIMUM OF 5 SECONDS. NO DEFECTS NOTED.
s were ground as a final cleaning operation allowed by ASME Case Code #1525.
s were annealed at 1950°F ± 25°F for 1/2 hour at temperature and water quenched.

reby certify to the chemical analysis and physical tests reported herein.

Supervisor of Metallurgy G. G. Weart

before me this 13th day of November 1975. Patricia Bronzino, Notary State of New York, Qualified in Erie County. My Commission expires March 30, 1976.

Patricia Bronzino

160

NEW YORK POWER AUTHORITY
INDIAN POINT NUCLEAR POWER PLANT
UNIT NO. 3
CALIBRATION BLOCKS

INDIAN POINT UNIT NO. 3 DESIGNATION	:	INT-18
COMPONENT/SYSTEM	:	8" SCH 120 RHR PIPING AND EXCESS LETDOWN HEAT EXCHANGER
SIZE/SCHEDULE	:	8" SCH 120 .719"T
MATERIAL	:	A312 TP304 STAINLESS STEEL
HEAT OR IDENTITY NUMBER	:	M0176

ASME SECTION V AND XI 1983 EDITION THROUGH SUMMER 1983 ADDENDA REQUIREMENTS:

1. Section V : T-110 and T-548
2. Section XI : Article III-1100, Supplement 7 and IMA-2250
3. Material : RHR Piping: A376 TP316 Stainless Steel; Excess Letdown Heat Exchanger; SA240 TP316 Stainless Steel
4. Size/Schedule: RHR Piping 8" SCH 120 .719"T; Excess Letdown Heat Exchanger 9.25" - .750"T

WESTINGHOUSE ELECTRIC CORPORATION - NSID - INSPECTION SERVICE DESIGN:

Calibration block was designed to meet intent of ASME Boiler and Pressure Vessel Code Section XI 1974 Edition through Summer 1975 Addenda.

RECOMMENDATION:

Calibration block design follows the guidelines of Section V and Section XI - 1983 Edition through Summer 1983 Addenda for Austenitic Piping. Use of 8" SCH 120 is nearest piping diameter and thickness available for Excess Letdown Heat Exchanger. Modifications of this design to meet the requirements of Section V and Section XI 1983 Edition through Summer 1983 Addenda for "ferritic piping and design T-547.1" would be to increase arc length to 120° and as required by Table III-3430-1 notch depth to 0.104T - 0.009T squared with tolerance of +10%-20%. P-Number Groupings for Materials A312 TP304 Stainless Steel, A376 TP316 Stainless Steel and SA240 TP316 Stainless Steel are equivalent.

NOTES:

1. WHEN MEASURED FROM EITHER SIDE OF CENTERLINE MINIMUM LENGTH AT BOTTOM OF AXIAL NOTCHES TO BE 0.5" AS SHOWN IN SIDE VIEW.
2. NOTCH DEPTH 10% OF MEASURED THICKNESS +0.005"-0.010".
3. PREP ALLOWED IN AREA OF SIDE DRILLED HOLE SHALL NOT INFRINGE ON HOLE SIZE REQUIREMENTS.
4. CIRCUMFERENTIAL HOLES AND NOTCHES TO BE PLUS OR MINUS 0.1" FROM ENDS.
5. LOCATE AXIAL NOTCHES SO AS NOT TO IMPOSE ON END OF HOLES OR ON END OF NOTCHES AT CENTERLINE.
6. FLAT SIDE OF NOTCHES TO BE PERPENDICULAR NOTCHED SURFACES, WITHIN 2°.
7. HOLE LOCATION TO BE BASED ON ACTUAL "T".
8. SIDE DRILLED HOLE DIAMETER TOLERANCE TO BE WITHIN ±0.03"
9. DRILL HOLES PERPENDICULAR TO RADIUS.
10. ARC DIMENSION +360° AND -0.080".
11. LENGTH TOLERANCE TO BE +2.00"-0.25"

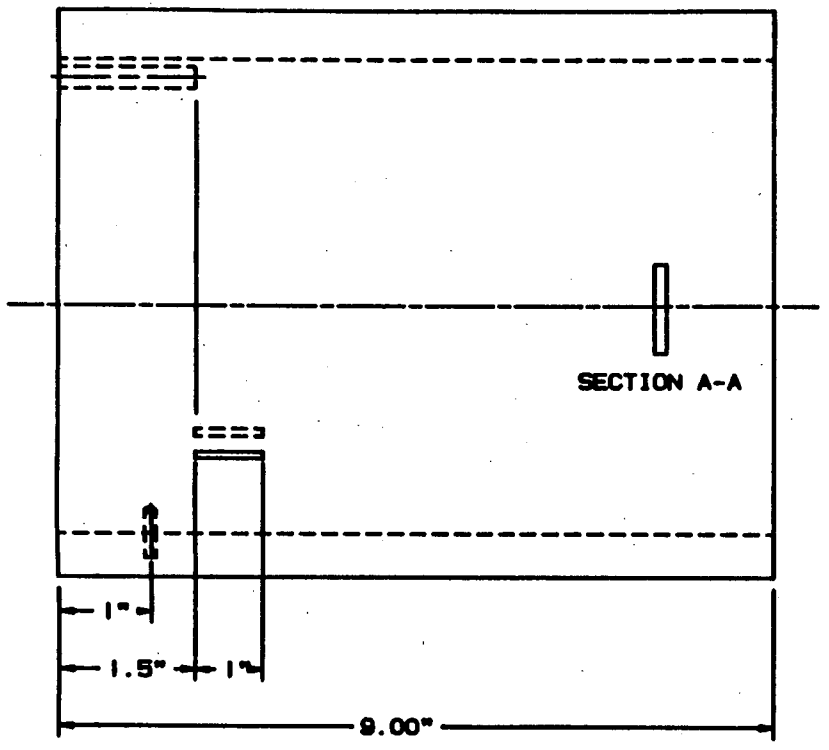

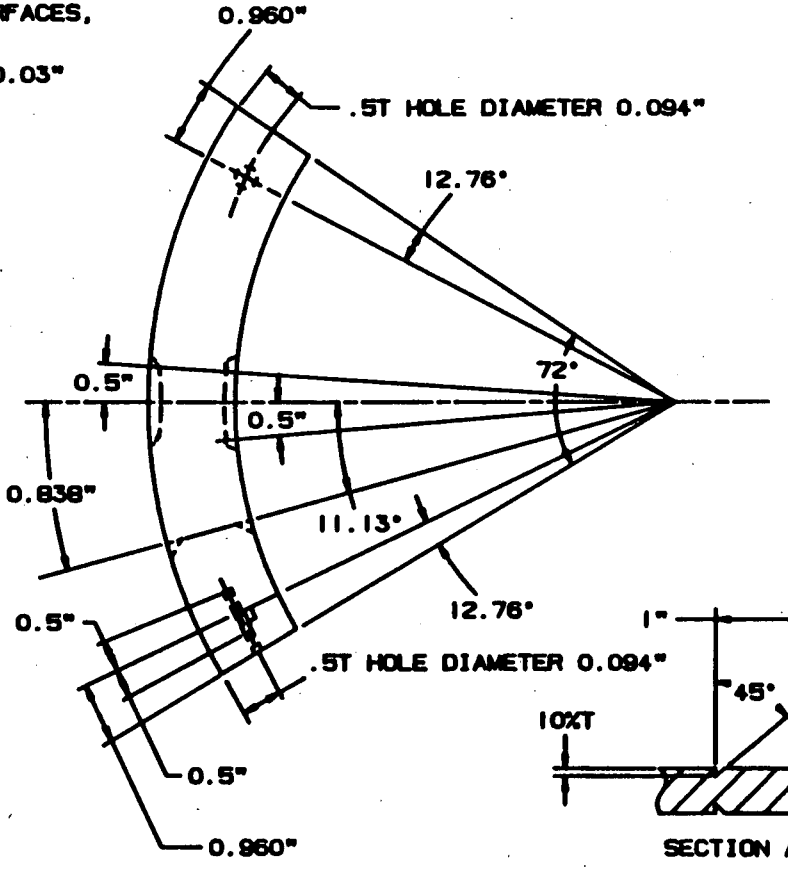

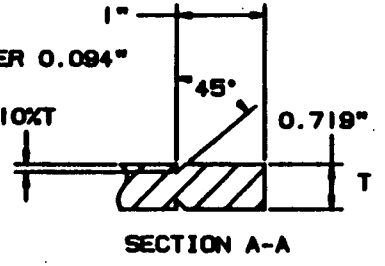

COMPUTER SYSTEM PLANT MODELING

NEED TECHNICAL APPROVAL Phillip C. Burkes	11-20-86	Westinghouse Electric Corporation PLANT ENGINEERING DIVISION - PITTSBURGH, PA
LEVEL III REVIEW David Kunk	11-20-86	TITLE CALIBRATION BLOCK INT-18 8" SCH 120 RHR PIPING AND EXCESS LETDOWN HEAT EXCHANGER 8" SCH 120 .719"T-B A312 TP304 STAINLESS STEEL HEAT NO.: M0176
ENG		
ENG		
MER		C SK. NO. REV.

REVISIONS

Phone: (412) 539-2534

TOOLING SPECIALISTS INC.

P. O. Box 251
LATROBE, PENNSYLVANIA
15650

CONSIGNEE

DATE JAN. 18 19 79

WESTINGHOUSE ELECTRIC CORPORATION
NUCLEAR ENERGY SYSTEMS
P.O. BOX 355
PITTSBURGH, PA. 15230

PURCHASE ORDER NO. 544-XE-287360-RN

NO. PIECES	DESCRIPTION
29	3 32 OD HT 802N7160
	8 18 SCH 40 HT A3533
	8 16 SCH 120 HT 42794
	6 10 SCH 120 HT 6-448
	4 8 SCH 120 HT M0176
	COMPLETE

John W. McBell
1/18/79

DELIVER TO: PHIL BURES

W. O. 21025

RECEIVED THE ABOVE _____
RECEIVING CLERK

163

TOOLING
SPECIALISTS
INCORPORATED

MACHINE TOOL BUILDERS — SPECIAL MACHINING — DIES — ENGINEERING SERVICE

P. O. Box 251, Latrobe, Pa. 15650 Phone: (412) 539-2534

WESTINGHOUSE ELECTRIC CORPORATION
NUCLEAR ENERGY SYSTEMS
P.O. BOX 355
PITTSBURGH, PA. 15230

PO # 544-XK-287360-RN

Subject: Letter of Compliance

Gentlemen:

Please be advised that the product or products shipped to you on the above referenced purchase order have been manufactured to comply with both dimensional and contractual requirements established and agreed upon between buyer and seller.

All Local, State and Federal Government requirements have been complied with on this purchase order.

Thank you.

Sincerely,
TOOLING SPECIALISTS INC.

Thomas D. Shearer

Thomas D. Shearer
Manager Special Products

TDS*sdp

164

INSPECTION REPORT

Page _____ of _____

TOOLING SPECIALISTS, INC.
Latrobe, Pa. 15650
Phone: (412) 539-2534

Dwg. # Wood Cover
P. O. #
Revision
Item
Work Order # 31-025

CUSTOMER:

PART DESCRIPTION: 8 Sch 120

m 0176
HT # m0176

IF OUT OF TOLERANCE, PLACE X IN BOX TO RIGHT OF DIMENSION.

DRAWING DIMENSIONS		Part No. A	X	Part No. B	X	Part No. C	X	Part No. E	X	Part No.	X	Part No.	X
Nom. Wall Thickness		.225		.254		.255		.200					
Cir. Notch	O.D.	.072		.075		.075		.070					
	I.D.	.072		.075		.075		.070					
Axial Notch	O.D.	.073		.075		.075		.070					
	I.D.	.073		.075		.075		.070					
Length		9"		9"		9"		9"					
1st End Hole 3/32		.359		.369		.371		.357					
1st Side Hole 3/32		.369		.374		.375		.355					
	B	11°8'		11°8'		11°8'		11°8'					
	C	12°45'		12°45'		12°45'		12°45'					
	E	6°38'		6°38'		6°38'		6°38'					
	F	8°11'		8°11'		8°11'		8°11'					

INSPECTOR:

RECEIVING INSPECTOR:

W.D.S. 10 Rev. 2 11/01/78

NOM. PIPE SIZE"	SCHED ULE	NOM. WALL 'T'"	O.D."	HOLE DIAM ETER"	HOLES 1/4T	1/2T	3/4T	NOTCHES CIRC. O.D.	CIRC. I.D.	AXIAL O.D.	AXIAL I.D.	Length"	NOM. ARC A°	B°	B" (O.D.)	C°	C" (O.D.)	E°	E"& F"	F°
8	120	.719	8.625	3/32	-	2	-	X	X	X	X	9	72	11.13	.838	12.76	.960	6.64	.5	8.18

NOTE: Original dimensional requirements supplied to manufacturer.

General Data

1. E and F Dimension - minimum at bottom of notches (.500").
2. D Dimension - Typical all notches (10% of measured thickness) +.500" -.010".
3. A Dimension + to 360° and -.080" of arc.
4. Length +2" -.25".
5. Holes optional for T less than .8".
6. Flat blocks .8"T or less may contain 1/2T hole only.
7. Final acceptable dimensions to be based on intent.
8. Hole location to be based on actual "T".
9. Flat side of notches to be perpendicular notched surfaces, within 2°.
10. Side drilled holes to be within ± 1/32" tolerance.

Intent

1. C Dimension to be approximately 3/4" from edge of arc segment.
2. E and F dimension applicable to both sides of centerline so as to provide 1" long (at bottom) notches.
3. B Dimension to locate axial notches so as not to impose on end of hole at C location or on end of notches at centerline.
4. Circumferential reflectors to be positioned to allow 2T (Full Vee) calibration at 45° beam angle (not applicable for 1 1/2" Sch 80, 1 1/2" Sch 160, 2" Sch 80, 2" Sch 160, 3" Sch 40 & 3" Sch 80).
5. Circumferential holes and notches to be plus or minus .1" from ends.

8" S/120 TP 304

Babcock & Wilcox

Tubular Products Division

ALLIANCE OHIO-1 | BEAVER FALLS, PA.-2 | MILWAUKEE, WISCONSIN-3

TEST REPORT

CUSTOMER ORDER NO: 77230-00N | DATE: 2/18/76 | SHIPPING NUMBER: 211612

SOLD TO:
CAPITOL PIPE & STEEL PRODUCTS INC.
P O BOX 471
SALA CYNWYD PA 19004

SHIP TO:
CAPITOL PIPE & STEEL PRODUCTS, INC.
SAN ANTONIO & ORANGE STREETS
PEARLAND, TEXAS

Material was given a heat treatment consisting of heating to a min. of 1900°F for a minimum of 10 minutes and water quenched.

Both raw materials and finished products on this order have been produced in the USA.

MATERIAL: SEAMLESS CROLOY 304 EXC. 04 MIN CARB. EF CD AW PIPE ASTM A 312-74
ASME SA 312, PRODUCT ANALYSIS PARA 8.

MARK SHIP TO: TAG P.O. NO.
NO OIL - PICKLE

STEEL WAS MELTED IN THE USA

B & W ORDER NO. — FIELD O.D. WALL PROM. OC CODE NO. "P" PARTIAL — "C" COMPLETE

ITEM	O.D.	WALL	LENGTH	SPECIAL MARKS	%	PCS.	FOOTAGE	HYDRO TEST LBS. PER SQ. INCH	TESTS MADE
-A058279-202934 00035 09110000									ETCH
01	8625	718	RL 17-24					2498 5 Sec.Hold	BEND
									FLATTENING OK
									FLANGE
									EXPANSION
									FLARE
									CORROSION
									MICRO
									ULTRASONIC
									DYE PENETRANT

Tooling Specl.
0144

CAPITOL PIPE & STEEL PRODUCTS
QUALITY ASSURANCE
APPROVED
By D. Macia
Date 3-6-78

CHEM ANALYSIS

ITEM	HEAT NO	CARB	MANG	SUL.	PHOS.	SIL.	CHROM	NI	MO.	CU	C B	TI
	M0194	.053	1.75	.007	.028	.47	18.82	10.50				
	Tube Ck.	.062	1.77	.010	.025	.47	18.76	10.36				
	Tube Ck.	.064	1.75	.010	.025	.47	18.77	10.37				
	M0176	.067	1.79	.018	.023	.46	18.98	10.46				
	Tube Ck.	.058	1.82	.015	.024	.46	18.90	10.49				
	Tube Ck.	.065	1.81	.015	.024	.47	18.95	10.49				

ITEM	HEAT NO.	ULTIMATE STRENGTH	YIELD POINT	% ELONG IN 2"	REDUCT. IN AREA	HARDNESS
	M0194	77300	37600	80		
	M0176	75100	35000	78		

Longitudinal Tensile Specimen

STRIP [X] STD RD [ ] FULL SECTION [ ]

SWORN TO AND SUBSCRIBED BEFORE ME 2-19-76

Rita J. Pyle
NOTARY PUBLIC
RITA J. PYLE, Notary Public
W. Mayfield Borough, Bvr. County, Pa.
MY COMMISSION EXPIRES
COMMISSION EXPIRES OCT. 3, 1978

THIS IS TO CERTIFY THE ABOVE TUBES AND PIPE HAVE BEEN INSPECTED AND TESTED IN ACCORDANCE WITH AND HAVE MET ALL THE REQUIREMENTS OF THE SPECIFICATIONS.

eh

THE BABCOCK & WILCOX COMPANY BY Paul D. Price

Paul D. Price

167

NEW YORK POWER AUTHORITY
INDIAN POINT NUCLEAR POWER PLANT
UNIT NO. 3
CALIBRATION BLOCKS

INDIAN POINT UNIT NO. 3 DESIGNATION	:	INT-19
COMPONENT/SYSTEM	:	8" SCH 80 PIPING
SIZE/SCHEDULE	:	8" SCH 80 .500"T
MATERIAL	:	A106 GRADE B CARBON STEEL
HEAT OR IDENTITY NUMBER	:	139624

ASME SECTION V AND XI 1983 EDITION THROUGH SUMMER 1983 ADDENDA REQUIREMENTS:

1. Section V : T-547
2. Section XI : Article III-3400
3. Material : A106 Grade B Carbon Steel
4. Size/Schedule: 8" SCH 80 .500"T

WESTINGHOUSE ELECTRIC CORPORATION - NSID - INSPECTION SERVICE DESIGN:

Calibration block was designed to meet intent of ASME Boiler and Pressure Vessel Code Section XI 1974 Edition through Summer 1975 Addenda.

RECOMMENDATION:

Calibration block follows the design and requirements for Section V and Section XI of the 1983 Edition through Summer 1983 Addenda except for arc length of 120° instead of 70° as required by Figure T-547.1 and notch depth to 0.104T - 0.009T squared with tolerance of +10%-20% as required by Table III-3430-1. At this time there is no existing Class 2, 8" SCH 80 Carbon Steel Piping and this calibration block is not required. Class 2 Piping less than or equal to 1/2 inch thickness no longer requires Volumetric examination per the requirements of Section XI 1983 Edition through Summer 1983 Addenda.

170

NOTES:

1. WHEN MEASURED FROM EITHER SIDE OF CENTERLINE MINIMUM LENGTH AT BOTTOM OF AXIAL NOTCHES TO BE 0.5" AS SHOWN IN SIDE VIEW.
2. NOTCH DEPTH 10% OF MEASURED THICKNESS +0.005"-0.010".
3. PREP ALLOWED IN AREA OF SIDE DRILLED HOLE SHALL NOT INFRINGE ON HOLE SIZE REQUIREMENTS.
4. CIRCUMFERENTIAL HOLES AND NOTCHES TO BE PLUS OR MINUS 0.1" FROM ENDS.
5. LOCATE AXIAL NOTCHES SO AS NOT TO IMPOSE ON END OF HOLES OR ON END OF NOTCHES AT CENTERLINE.
6. FLAT SIDE OF NOTCHES TO BE PERPENDICULAR NOTCHED SURFACES, WITHIN 2°.
7. HOLE LOCATION TO BE BASED ON ACTUAL "T".
8. SIDE DRILLED HOLE DIAMETER TOLERANCE TO BE WITHIN ±0.03"
9. DRILL HOLES PERPENDICULAR TO RADIUS.
10. ARC DIMENSION +360° AND -0.080".
11. LENGTH TOLERANCE TO BE +2.00"-0.25"

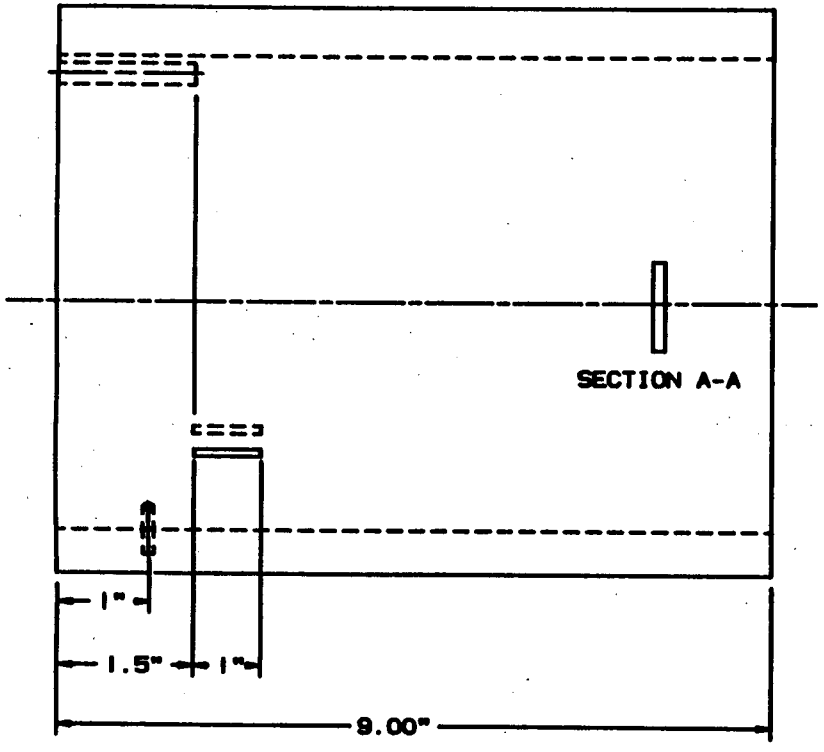

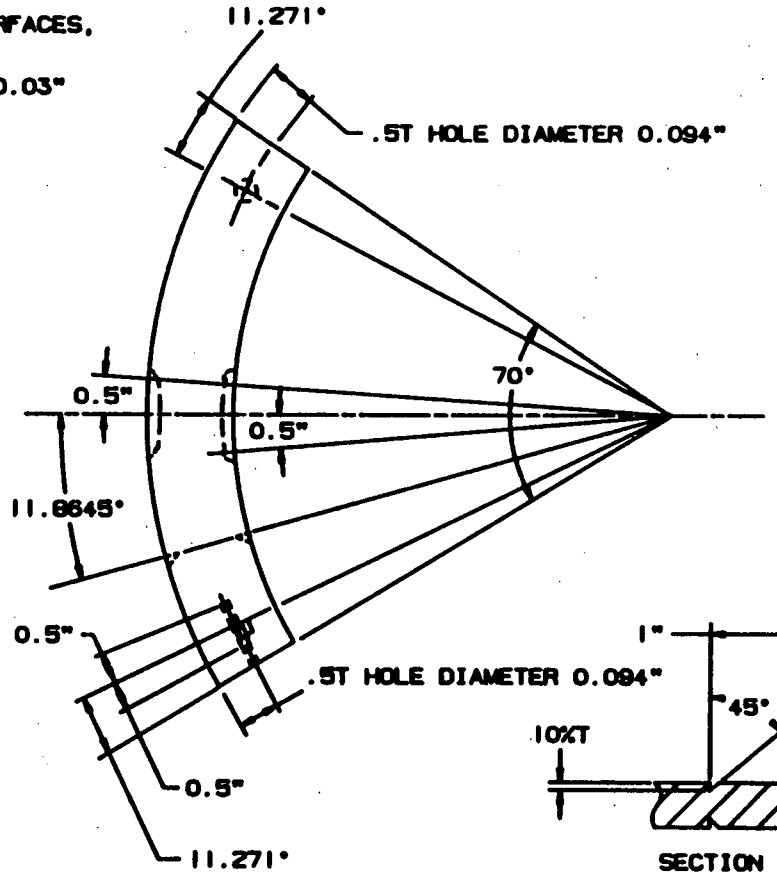

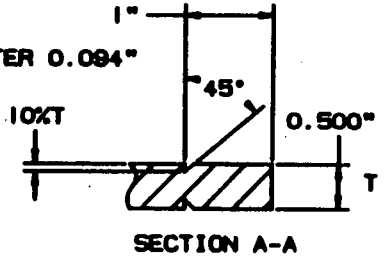

COMPUTER SYSTEM PLANT MODELING

NSSD TECHNICAL APPROVAL Phillip C. Burka	11-30-86	Westinghouse Electric Corporation PLANT DIAGNOSTIC DIVISION - PITTSBURGH, PA
LEVEL III REVIEW David Kunk	11-25-86	TITLE CALIBRATION BLOCK INT-19 8" SCH 80 PIPING 8" SCH 80 .500"T-B A106 GRADE B CARBON STEEL HEAT NO.: 139624
		SIZE C SH. NO. REV.

Phone: (412) 539-2534

TOOLING SPECIALISTS INC.

P. O. Box 251
LATROBE, PENNSYLVANIA
15650

266536

CONSIGNEE

DATE DEC. 17 19 78

WESTINGHOUSE ELECTRIC CORPORATION
NUCLEAR ENERGY SYSTEMS
PITTSBURGH, PA. 15230

PURCHASE ORDER NO. 544-YG-266536-XV

NO. PIECES		CALIBRATION BLOCKS: DESCRIPTION
3	EA.	28" .858"T A155KCF-70 C.S. HEAT NO. 802D03830 PER W 003 REV. 1
2	EA.	3" SCH. 160 A376TP304SS HEAT NO. 453853 PER W 004 REV. 1
4	EA.	8" SCH. 80 A106 GRADE B CS HEAT NO. 139624 PER W 004 REV. 1
4	EA.	6" SCH. 40 A312 TP 304 SS HEAT NO. M9950 PER W 005 REV. 2
1	EA.	2" SCH. 160 A312 TP304 SS HEAT NO. 08754 PER W 005 REV. 2
1	EA.	6" SCH. 80 A106 GRB CS HEAT NO. 240393 PER W 004 REV. 1

W. O. 26481

RECEIVED THE ABOVE Phillips C Barnes
RECEIVING CLERK

TOOLING
SPECIALISTS
INCORPORATED

MACHINE TOOL BUILDERS — SPECIAL MACHINING — DIES — ENGINEERING SERVICE

P. O. BOX 251, LATROBE, PA. 15650 Phone: (412) 539-2534

February 16, 1978

LETTER OF COMPLIANCE

Westinghouse Electric Corporation
Nuclear Energy Systems
P. O. Box 355
Pittsburgh, Pa. 15230

Attention: Mr. E. M. Gamble, Buyer

Reference: P. O. No. 544-XG-266536-XN

Gentlemen:

We hereby certify that Calibration Standard, as supplied, meet the Dimensional Requirements on above order.

Two (2) Copies of DSF Form 54956D attached.

Sincerely,

Tooling Specialists Inc.

Thomas D. Shearer/Susie

Thomas D. Shearer

TDS*eww

ENCLS.

172

INSPECTION REPORT

Page 2 of 6

TOOLING SPECIALISTS, INC.
Latrobe, Pa. 15650
Phone: (412) 539-2534

Dwg. #
Revision
Item
P. O. #
Work Order # 20481

CUSTOMER:

PART DESCRIPTION:

8" Sch 80 A106 Grade B CS Heat # 139624 W004-1

IF OUT OF TOLERANCE, PLACE X IN BOX TO RIGHT OF DIMENSION.

DRAWING DIMENSIONS	Part No. A	X	Part No. B	X	Part No. C	X	Part No. D	X	Part No.	X	Part No.	X
A	.528		.560		.530		.490					
B	.515		.575		.557		.490					
C	.052		.056		.053		.049					
D	.051		.057		.055		.049					
E	70°		70°		70°		70°					
F	9.900		9.900		9.900		9.900					
G	.094		.094		.094		.094					
	1.500		1.500		1.500		1.500					
E	6°37'		6°37'		6°37'		6°37'					
G	11°16'		11°16'		11°16'		11°16'					
F	7°31'		7°31'		7°31'		7°31'					
B	11°52'		11°52'		11°52'		11°52'					

INSPECTOR:

RECEIVING INSPECTOR:

W.D.S. 10

NOM. PIPE SIZE"	SCHED ULE	NOM. WALL 'T'"	O.D."	HOLE DIAM ETER"	HOLES 1/4T	HOLES 1/2T	HOLES 3/4T	NOTCHES CIRC. O.D.	NOTCHES CIRC. I.D.	NOTCHES AXIAL O.D.	NOTCHES AXIAL I.D.	NOTCHES AXIAL Length"	NOM. ARC A°	B°	B" (O.D.)	C°	C" (O.D.)	E°	E"& F"	F°
8	80	.500	8.625	3/32	-	2	-	X	X	X	X	9	70	11.8645	-	11.271	-	6.642	.5	7.514

NOTE: Original dimensional requirements supplied to manufacturer.

General Data

1. E and F Dimension - minimum at bottom of notches (.500").
2. D Dimension - Typical all notches (10% of measured thickness) +.500" -.010".
3. A Dimension + to 360° and -.080" of arc.
4. Length +2" -.25".
5. Holes optional for T less than .8".
6. Flat blocks .8"T or less may contain 1/2T hole only.
7. Final acceptable dimensions to be based on intent.
8. Hole location to be based on actual "T".
9. Flat side of notches to be perpendicular notched surfaces, within 2°.
10. Side drilled holes to be within ± 1/32" tolerance.

Intent

1. C Dimension to be approximately 3/4" from edge of arc segment.
2. E and F dimension applicable to both sides of centerline so as to provide 1" long (at bottom) notches.
3. B Dimension to locate axial notches so as not to impose on end of hole at C location or on end of notches at centerline.
4. Circumferential reflectors to be positioned to allow 2T (Full Vee) calibration at 45° beam angle (not applicable for 1 1/2" Sch 80, 1 1/2" Sch 160, 2" Sch 80, 2" Sch 160, 3" Sch 40 & 3" Sch 80).
5. Circumferential holes and notches to be plus or minus .1" from ends.

175

32464 (R 1/72)

Date: 8-11-76

INVOICE NO.	CAR NUMBER
8-7307	P&LE 46126

Jones & Laughlin Steel Corporation

STEEL

☐ ALIQUIPPA, PA. ☐ PITTSBURGH, PA.

A. B. MURRAY CO., INC.
P. O. BOX 476
ELIZABETH, N. J. 07207

STATEMENT OF TESTS

This is to certify the following material has been inspected and tested in accordance with and has met the requirements of the stated specification. We also certify this report is correct as contained in the records of the Corporation.

C. W. Long

C. W. Long 8-11-76
WORKS CHIEF METALLURGIST

XX Material has been hydrostatically tested to specification requirements

MILL ORDER NUMBER	CUSTOMER ORDER NUMBER	DESCRIPTION	SPECIFICATION	HEAT NUMBER	YIELD POINT PSI	TENSILE STRENGTH PSI	ELONGATION 2" %	REDUCTION AREA %	FLATTENED	ANALYSIS C	Mn	P	S	Si		NOM. WIDTH INCHES
3-0235	E-62402-4	Item 2 J&L SMLS EX STG BLK 8" (8-5/8" O.D.) 43.39#	PE ASTM A-106 B ASME SA106 B	139624	53740	81550	34.0		OK	.23	.67	.011	.020	.22		

8" Sch 80

A. B. MURRAY CO.

This copy, to which this stamp is affixed, is a copy of the supplier's test report. Unless indicated, it is not the complete identification of the material but also a record of tests made to meet the specification requirements. Results shown on this report, those [illegible] are checked (✓) as being [illegible] that the material [illegible] is completely identifiable by this document.

Your P. O. 544-XK-249225VN

A. B. Murray Shop Order V-235058

Date: 10/11/76 R. R. No.

Signed [illegible]

FOR THE QUALITY CONTROL DEPARTMENT

NEW YORK POWER AUTHORITY
INDIAN POINT NUCLEAR POWER PLANT
UNIT NO. 3
CALIBRATION BLOCKS

INDIAN POINT UNIT NO. 3 DESIGNATION	:	INT-20
COMPONENT/SYSTEM	:	8" SCH 40S RHR PIPING
SIZE/SCHEDULE	:	8" SCH 40S .322"T
MATERIAL	:	A312 TP316 STAINLESS STEEL
HEAT OR IDENTITY NUMBER	:	M0937

ASME SECTION V AND XI 1983 EDITION THROUGH SUMMER 1983 ADDENDA REQUIREMENTS:

1. Section V : T-110 and T-548
2. Section XI : Article III-1100, Supplement 7 and IMA-2250
3. Material : A312 TP304 Stainless Steel
4. Size/Schedule: 8" SCH 40S .322"T

WESTINGHOUSE ELECTRIC CORPORATION - NSID - INSPECTION SERVICE DESIGN:

Calibration block was designed to meet intent of ASME Boiler and Pressure Vessel Code Section XI 1974 Edition through Summer 1975 Addenda.

RECOMMENDATION:

Calibration block design follows the quidelines of Section V and Section XI - 1983 Edition through Summer 1983 Addenda for Austenitic Piping. Class 2 Piping less than or equal to 1/2 inch thickness no longer requires Volumetric examination per the requirements of Section XI 1983 Edition through Summer 1983 Addenda. Modifications of this design to meet the requirements of Section V and Section XI - 1983 Edition through Summer 1983 Addenda for "ferritic piping and design T-547.1" would be to increase length to 8", arc length to 120° and add I. D. circumferential notch and as required by Table III-3430-1 notch depth to 0.104 - 0.009T squared with tolerance of +10%-20%. P-Number Groupings for Materials A312 TP316 Stainless Steel and A312 TP304 Stainless Steel are equivalent.

NOTES:

1. WHEN MEASURED FROM EITHER SIDE OF CENTERLINE MINIMUM LENGTH AT BOTTOM OF AXIAL NOTCHES TO BE 0.5" AS SHOWN IN SIDE VIEW.
2. NOTCH DEPTH 10% OF MEASURED THICKNESS +0.005"-0.010".
3. PREP ALLOWED IN AREA OF SIDE DRILLED HOLE SHALL NOT INFRINGE ON HOLE SIZE REQUIREMENTS.
4. CIRCUMFERENTIAL HOLES AND NOTCHES TO BE PLUS OR MINUS 0.1" FROM ENDS.
5. LOCATE AXIAL NOTCHES SO AS NOT TO IMPOSE ON END OF HOLES OR ON END OF NOTCHES AT CENTERLINE.
6. FLAT SIDE OF NOTCHES TO BE PERPENDICULAR NOTCHED SURFACES, WITHIN 2°.
7. HOLE LOCATION TO BE BASED ON ACTUAL "T".
8. SIDE DRILLED HOLE DIAMETER TOLERANCE TO BE WITHIN ±0.03"
9. DRILL HOLES PERPENDICULAR TO RADIUS.
10. ARC DIMENSION +360° AND 0.080".
11. LENGTH TOLERANCE TO BE +2.00"-0.25"

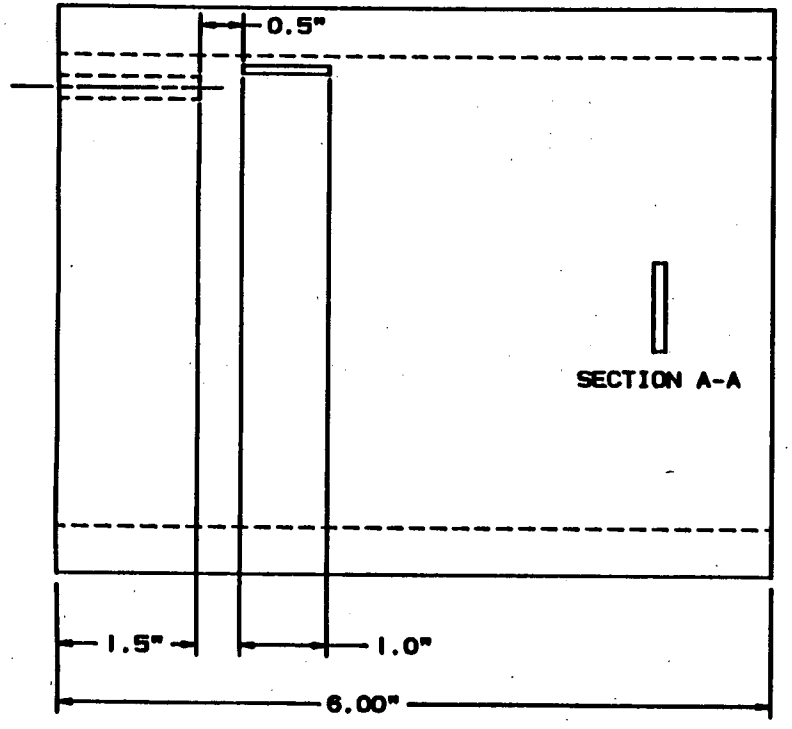

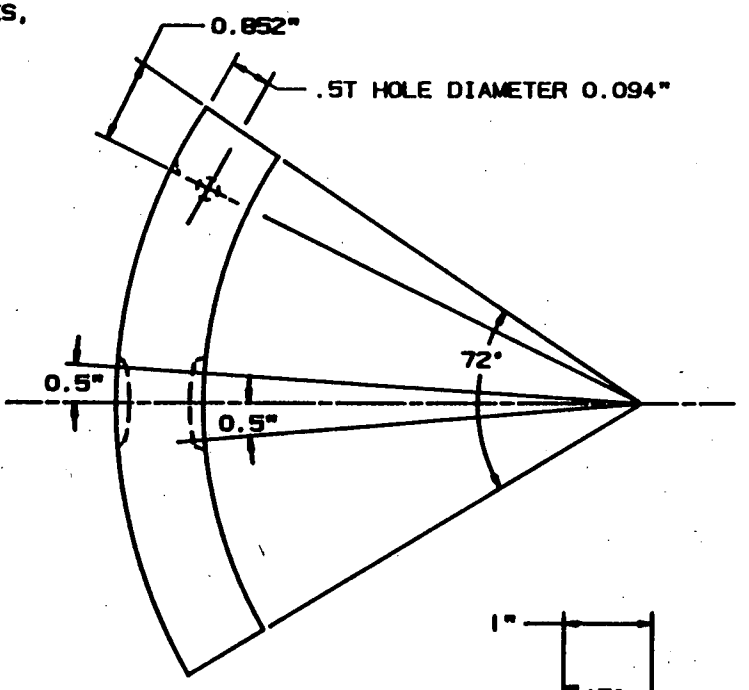

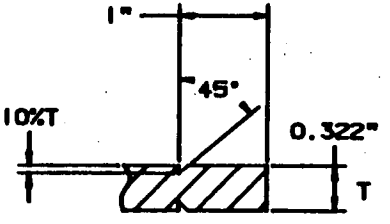

SECTION A-A

COMPUTER SYSTEM PLANT MODELING

NSSD TECHNICAL APPROVAL Phillip C. Bukra	11-20-86	Westinghouse Electric Corporation PLANT ENGINEERING DIVISION - PITTSBURGH, PA
LEVEL III REVIEW David Kunk	11-20-86	TITLE CALIBRATION BLOCK INT-20 8" SCH 40S RHR PIPING 8" SCH 40S .322"T-E A312 TP316 STAINLESS STEEL HEAT NO.: M0937
		SIZE C DR. NO. REV.

REVISION

NSD PA1010

Nuclear Service Division
QUALITY RELEASE

QR- 1619 REV. 0

PURCHASE ORDER	PART NAME	DRAWING & REV.
544-XK-287369-RN	UT CALIBRATION BLOCKS	W007 Rev1, W004 Rev4, W003 Rev3, W005 Rev3, W005 Rev5

PAR NO.	CHG. NOTICE NO.	P.O. ITEM NO.	PROJ./S.O. NO.	QTY. ON ORDER	QTY. RELEASED
0	3	001 thru 005, 007 thru 016	WFSN-9323	66	66

SUPPLIER	E. SPEC. & REV.	ORDER
TOOLING SPECIALISTS	N/A	COMPLETE ☑ YES ☐ NO

SERIAL OR IDENTIFICATION NOS. 77771 (A thru F), 26265 (A thru F), 2876-1-1 (A thru E), HT #'s: 87623, 01003 (A thru D), 26896 (A & B), M9290 (A & B), M2060 (A & B), D61232 (A thru F), 3122-5-2 (A thru E), 2637-4-2 (A thru F), M9959 (A thru D), M0937 (A thru E), 1971-12-1 (A thru F), 805222-1 (A thru F).

The equipment shown hereon is released by W Quality Assurance. Shipment may be made subject to authorization by W Purchasing. In the Audit Checklist below, an A indicates acceptability, a C indicates a contingency and a W indicates that W QA has waived the auditing or witnessing of the attribute. All non-applicable items are lined out.

AUDIT CHECKLIST

☑ A	Material Certifications	☐	~~Non-Operating Electrical Tests~~
☐	~~Heat Treat Records~~	☐	~~Operating Electrical Test~~
☐	~~RT Film and Records~~	☐	~~Pressure Test~~
☐	~~PT/MT Records~~	☐	~~Seat Tightness Test~~
☑ A	Visual	☐	~~Performance Test~~
☑ A	Dimensional	☑ A	Cleanliness
☐	~~UT Records~~	☑	Packaging
☐	~~Personnel Qualification: Welding, NDT~~	☐	~~Code Form~~
☐	~~~~	☐	~~Painting~~
☐	~~~~	☐	~~~~

DEVIATION NOTICES AND REMARKS (ALL DEVIATIONS HAVE BEEN APPROVED BY THE RESPONSIBLE WESTINGHOUSE ENGINEER UNLESS A SPECIFIC EXCEPTION IS STATED.)

Several pieces for a certain heat no. noted above by alphanumeric designation.

THE SUPPLIER CERTIFIES that for the equipment and material released, all contractual requirements have been met. Approved deviations, if any, are listed above.

SUPPLIER SIGNATURE [signature] DATE 3/27/79

TITLE

The equipment shown hereon is released by Quality Assurance. Shipment may be made subject to authorization by Purchasing.

The equipment supplier has certified that the equipment above meets all requirements of the purchase order, drawings and specifications. Westinghouse has reviewed evidence supporting this release and except as specified above has detected no deviations from such requirements. This release does not waive any rights Westinghouse may have under the purchase order including Westinghouse's right to reject the equipment upon discovery of any such deviations after arrival at destination.

K. R. Moran 3-27-79

Westinghouse Quality Assurance Representative

SUPPLIER (ATTACH TO SHIPPING PAPERS)

TOOLING
SPECIALISTS
INCORPORATED

MACHINE TOOL BUILDERS — SPECIAL MACHINING — DIES — ENGINEERING SERVICE

P. O. BOX 251, LATROBE, PA. 15650 Phone: (412) 539-2534

Letter of Compliance

March 27, 1979

This is a statement of compliance to the requirements of Westinghouse Purchase Order Number 544-XK-287369-RN.

All required processes, tests and inspections have been performed. Inspection data sheets, heat treat charts, weld wire and material certifications are attached as required by the Purchase Order.

A listing of Purchase Order items in this shipment is attached.

Documented evidence of compliance supporting this certification is available at Tooling Specialists.

Sincerely yours,

Thomas D Shearer

Thomas D. Shearer
Manager Special Products

TDS/sfz

179

INSPECTION REPORT

Page _____ of _____

TOOLING SPECIALISTS, INC.
Latrobe, Pa. 15650
Phone: (412) 539-2534

Dwg. # 005 Rev 5
P. O. #
Revision
Item
Work Order # 31077

CUSTOMER:

W 005 Rev 5

PART DESCRIPTION:

8 Sch 40/5 H.T. M0937

IF OUT OF TOLERANCE, PLACE X IN BOX TO RIGHT OF DIMENSION.

DRAWING DIMENSIONS		Part No. A	X	Part No. B	X	Part No. C	X	Part No. D	X	Part No. E	X	Part No.	X
Nom. Wall Thickness		.341		.313		.300		.315		.340			
Cir. Notch	O.D.	.034		.031		.030		.031		.034			
	I.D.	.034		.031		.030		.031		.034			
Axial Notch	O.D.	.033		.030		.030		.032		.034			
	~~I.D.~~												
A°		72°		72°		72°		72°		72°			
Length		6"		6"		6"		6"		6"			
Hole 3/32 d.a.		.166		.152		.150		.162		.173			
	B	—		—		—		—		—		—	
	C	11°18'		11°18'		11°18'		11°18'		11°18'		~~11°18'~~	
	E	6°38'		6°38'		6°38'		6°38'		6°38'		~~6°38'~~	
	F	7°15'		7°15'		7°15'		7°15'		7°15'		~~7°15'~~	

INSPECTOR: [illegible] 3/5/[illegible]

RECEIVING INSPECTOR:

181

W.D.S. 10 Rev. 7 03/18/79

NOM. PIPE SIZE"	SCHED ULE	NOM. WALL 'T'"	O.D."	HOLE DIAM ETER"	HOLES 1/4T	HOLES 1/2T	HOLES 3/4T	NOTCHES CIRC. O.D.	NOTCHES CIRC. I.D.	NOTCHES AXIAL O.D.	NOTCHES AXIAL I.D.	NOTCHES AXIAL Length"	NOM. ARC A°	B°	B" (O.D.)	C°	C" (O.D.)	E°	E"& F"	F°
8	40S	.322	8.625	3/32	-	1	-	X	X	X	-	6	72	-	-	11.31	.852	6.64	.5	7.25

NOTE: Original dimensional requirements supplied to manufacturer.

General Data

1. E and F Dimension - minimum at bottom of notches (.500").
2. D Dimension - Typical all notches (10% of measured thickness) +.500" -.010".
3. A Dimension + to 360° and -.080" of arc.
4. Length +2" -.25".
5. Holes optional for T less than .8".
6. Flat blocks .8"T or less may contain 1/2T hole only.
7. Final acceptable dimensions to be based on intent.
8. Hole location to be based on actual "T".
9. Flat side of notches to be perpendicular notched surfaces, within 2°.
10. Side drilled holes to be within ± 1/32" tolerance.

Intent

1. C Dimension to be approximately 3/4" from edge of arc segment.
2. E and F dimension applicable to both sides of centerline so as to provide 1" long (at bottom) notches.
3. B Dimension to locate axial notches so as not to impose on end of hole at C location or on end of notches at centerline.
4. Circumferential reflectors to be positioned to allow 2T (Full Vee) calibration at 45° beam angle (not applicable for 1 1/2" Sch 80, 1 1/2" Sch 160, 2" Sch 80, 2" Sch 160, 3" Sch 40 & 3" Sch 80).
5. Circumferential holes and notches to be plus or minus .1" from ends.

BABCOCK & WILCOX

Tubular Products Division

ALLIANCE, OHIO-1 | BEAVER FALLS, PA.-2 | MILWAUKEE, WISCONSIN-3

A312 TP. 316 8" Std (40) 376

TEST REPORT

CUSTOMER ORDER NO. 6A-16526-N

Material was given a heat treatment consisting of heating to a min. of 1900°F for a min. of 10 minutes & water quench.

LED WAS TESTED IN THE HOT

SMLS CROLOY 316 EF CD AW PIPE TO ASTM-A-312-75 & ASTM-A-376-75 & ASME SA-312 & ASME-SA-376 .04 MIN CARBON WITH ANALYSIS ON 2 PIPES EA LOT & HT PER PARA 8 OF A/SA 312 & 376 CORROSION TESTED TO ASTM-A-262 PRACTICE E

NO OIL. PICKLED & PASSIVATED

8" S/40

ITEM	OD	WALL	LENGTH	SPECIAL MARKS	PCS.	FOOTAGE	HYDRO TEST LBS. PER SQ. INCH	TESTS MADE
01	8.625	.322	RL 20-27		9	213.50	1120 5 Sec. Hold	ETCH; BEND; FLATTENING OK; FLANGE; EXPANSION; FLARE; CORROSION Intergranular OK ASTM A-262, Practice E; MICRO; ULTRASONIC; DYE PENETRANT

ORDER NO. 045925-202S22000350911 0000

Capitol Pipe & Steel Prod.
77745-00n
Item #1

Tooling Specialists
5110

HEAT NO.	CARB	MANG	SUL.	PHOS.	SIL.	CHROM	NI	MO.	CU.	C.B.	TI.
X0937	.062	1.30	.018	.024	.57	16.91	13.16	2.29			
Tube Ck.	.055	1.32	.026	.022	.59	16.88	13.19	2.29			
Tube Ck.	.054	1.31	.026	.022	.59	16.87	13.21	2.29			

HEAT NO.	ULTIMATE STRENGTH	YIELD POINT	ELONG. IN 2"	REDUCT. IN AREA	HARDNESS
	81400	39300	61		

STRIP [X] STD. RD [ ] FULL SECTION [ ]

SWORN TO AND SUBSCRIBED BEFORE ME 10/11/76

RITA J. BELL, Notary Public
W. Mayfield Twp., Bav. County, Pa.
MY COMMISSION EXPIRES
OCT 3, 1979

THIS IS TO CERTIFY THE ABOVE TUBES AND PIPE HAVE BEEN INSPECTED AND TESTED IN ACCORDANCE WITH AND HAVE MET ALL THE REQUIREMENTS OF THE SPECIFICATIONS.

ch

THE BABCOCK & WILCOX COMPANY

NEW YORK POWER AUTHORITY
INDIAN POINT NUCLEAR POWER PLANT
UNIT NO. 3
CALIBRATION BLOCKS

INDIAN POINT UNIT NO. 3 DESIGNATION	:	INT-21
COMPONENT/SYSTEM	:	6" SCH 120 RHR AND PRESSURIZER SAFETY PIPING
SIZE/SCHEDULE	:	6" SCH 120 .562"T
MATERIAL	:	A376 TP316 STAINLESS STEEL
HEAT OR IDENTITY NUMBER	:	M9948

ASME SECTION V AND XI 1983 EDITION THROUGH SUMMER 1983 ADDENDA REQUIREMENTS:

1. Section V : T-110 and T-548
2. Section XI : Article III-1100, Supplement 7 and IMA-2250
3. Material : A376 TP316 Stainless Steel
4. Size/Schedule: 6" SCH 120 .562"T

WESTINGHOUSE ELECTRIC CORPORATION - NSID - INSPECTION SERVICE DESIGN:

Calibration block was designed to meet intent of ASME Boiler and Pressure Vessel Code Section XI 1974 Edition through Summer 1975 Addenda.

RECOMMENDATION:

Calibration block design follows the quidelines of Section V and Section XI - 1983 Edition through Summer 1983 Addenda for Austenitic Piping. Modifications of this design to meet the requirements of Section V and Section XI - 1983 Edition through Summer 1983 Addenda for "ferritic piping and design T-547.1" would be to increase arc length to 160° and as required by Table III-3430-1 notch depth to 0.104 - 0.009T squared with tolerance of +10%-20%.

NOTES:

1. WHEN MEASURED FROM EITHER SIDE OF CENTERLINE MINIMUM LENGTH AT BOTTOM OF AXIAL NOTCHES TO BE 0.5" AS SHOWN IN SIDE VIEW.
2. NOTCH DEPTH 10% OF MEASURED THICKNESS +0.005"-0.010".
3. PREP ALLOWED IN AREA OF SIDE DRILLED HOLE SHALL NOT INFRINGE ON HOLE SIZE REQUIREMENTS.
4. CIRCUMFERENTIAL HOLES AND NOTCHES TO BE PLUS OR MINUS 0.1" FROM ENDS.
5. LOCATE AXIAL NOTCHES SO AS NOT TO IMPOSE ON END OF HOLES OR ON END OF NOTCHES AT CENTERLINE.
6. FLAT SIDE OF NOTCHES TO BE PERPENDICULAR NOTCHED SURFACES, WITHIN 2°.
7. HOLE LOCATION TO BE BASED ON ACTUAL "T".
8. SIDE DRILLED HOLE DIAMETER TOLERANCE TO BE WITHIN ±0.03"
9. DRILL HOLES PERPENDICULAR TO RADIUS.
10. ARC DIMENSION +360° AND -0.080".
11. LENGTH TOLERANCE TO BE +2.00"-0.25"

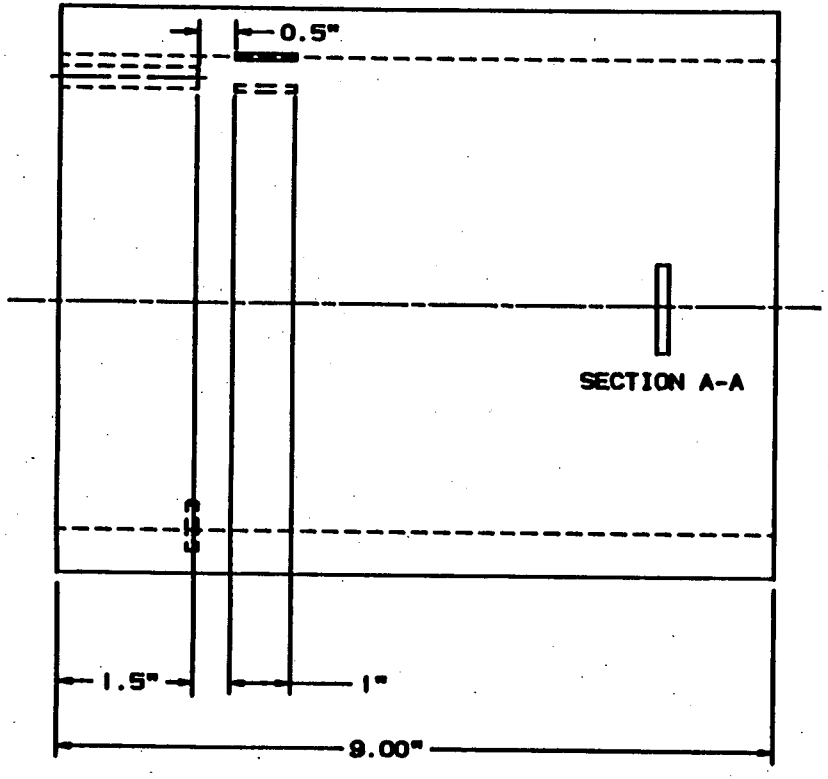

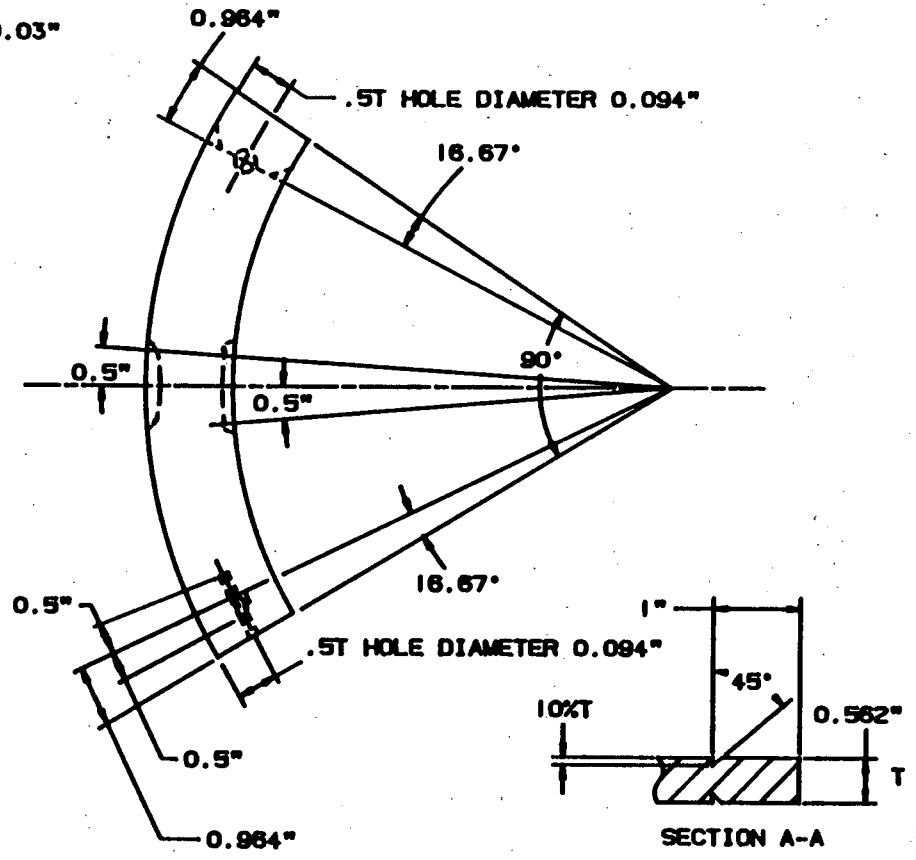

COMPUTER SYSTEM PLANT MODELING

HEAD TECHNICAL APPROVAL Phillip C. Burka	11-20-86	Westinghouse Electric Corporation PLANT ENGINEERING DIVISION - PITTSBURGH, PA
LEVEL III REVIEW David Kunf	11-20-86	TITLE CALIBRATION BLOCK INT-21 6" SCH 120 RHR AND PRESSURIZER SAFETY PIPING 6" SCH 120 .562"T-A A376 TP316 STAINLESS STEEL HEAT NO.: M9948
		C DWG. NO. REV.

NSD PA1010

Nuclear Service Division
QUALITY RELEASE

QR- 1623 REV. 0

PURCHASE ORDER	PART NAME	DRAWING & REV
294103	Calibration Blocks	W003 Rev 3, W004 Rev 4, W005 Rev 5, W006 Rev 6, W007 Rev 1

PAR NO.	CHG. NOTICE NO.	P.O. ITEM NO.	PROJ./S.O. NO.	QTY. ON ORDER	QTY. RELEASED
0	1	1 thru 6, 8 thru 15	VISN-9327/IPBN-9327	65	59

SUPPLIER	E. SPEC. & REV.	ORDER
Tooling Specialists	N/A	COMPLETE ☐ YES ☑ NO

SERIAL OR IDENTIFICATION NOS.

MT #: 30106 (6 pieces), NNN7B (A thru F), N7212 (A & B), 182 (A thru H), 8051726 (A thru H), M9948 (A thru D), 2626-8-1 (A thru E), 245865 (A thru H), 534982 (A thru F), 2633-13-1 (A thru F).

The equipment shown hereon is released by W Quality Assurance. Shipment may be made subject to authorization by W Purchasing. In the Audit Checklist below, an A indicates acceptability, a C indicates a contingency and a W indicates that W QA has waived the auditing or witnessing of the attribute. All non-applicable items are lined out.

AUDIT CHECKLIST

[A] Material Certifications	~~[ ] Non-Operating Electrical Tests~~
~~[ ] Heat Treat Records~~	~~[ ] Operating Electrical Test~~
~~[ ] RT Film and Records~~	~~[ ] Pressure Test~~
~~[ ] PT/MT Records~~	~~[ ] Seat Tightness Test~~
[A] Visual	~~[ ] Performance Test~~
[A] Dimensional	[A] Cleanliness
~~[ ] UT Records~~	[W] Packaging
~~[ ] Personnel Qualification: Welding, NDT~~	~~[ ] Code Form~~
~~[ ]~~	~~[ ] Painting~~
~~[ ]~~	[A] C.of C.

DEVIATION NOTICES AND REMARKS (ALL DEVIATIONS HAVE BEEN APPROVED BY THE RESPONSIBLE WESTINGHOUSE ENGINEER UNLESS A SPECIFIC EXCEPTION IS STATED.)

Six of the above blocks to be shipped to IPP.
s/N's: IPP-8, IPP-11, IPP-27, IPP-34, IPP-35, IPP-36.

THE SUPPLIER CERTIFIES that for the equipment and material released, all contractual requirements have been met. Approved deviations, if any, are listed above.

SUPPLIER SIGNATURE: Thomas Strain DATE: 6/29/79
TITLE:

The equipment shown hereon is released by Quality Assurance. Shipment may be made subject to authorization by Purchasing.

The equipment supplier has certified that the equipment above meets all requirements of the purchase order, drawings and specifications. Westinghouse has reviewed evidence supporting this release and except as specified above has detected no deviations from such requirements. This release does not waive any rights Westinghouse may have under the purchase order including Westinghouse's right to reject the equipment upon discovery of any such deviations after arrival at destination.

K.R. Moore 6-29-79
Westinghouse Quality Assurance Representative

REQUISITIONER

TOOLING SPECIALISTS INCORPORATED

MACHINE TOOL BUILDERS — SPECIAL MACHINING — DIES — ENGINEERING SERVICE

P. O. BOX 251, LATROBE, PA. 15650 Phone: (412) 539-2534

LETTER OF COMPLIANCE

June 29, 1979

This is a statement of compliance to the requirements of Westinghouse Purchase Order Number 544-MXK-294103-RN.

All required processes, tests, and inspections have been performed. Inspection data sheets, heat treat charts, weld wire and material certifications are attached as required by the Purchase Order.

A listing of Purchase Order items in this shipment is attached.

Documented evidence of compliance supporting this certification is available at Tooling Specialists.

Sincerely yours,

Thomas D. Shearer

Thomas D. Shearer
Manager Special Products

TDS:keo

2" Sch 160 Material has not been received yet

INSPECTION REPORT

Page _____ of _____

TOOLING SPECIALISTS, INC.
Latrobe, Pa. 15650
Phone: (412) 539-2534

Dwg. #
Revision
Item
P. O. #
Work Order # 21-235

CUSTOMER:

PART DESCRIPTION:
6 Sch 120 Ht M9948

IF OUT OF TOLERANCE, PLACE X IN BOX TO RIGHT OF DIMENSION.

DRAWING DIMENSIONS		Part No. A	X	Part No. B	X	Part No. C	X	Part No. D	X	Part No.	X	Part No.	X
Nom. wall Thickness		.559		.560		.582		.580					
Cir. Notch	OD	.055		.056		.058		.058					
	ID	.055		.056		.058		.058					
Axial Notch	OD	.055		.055		057		.058					
	ID	.055		.055		.057		.058					
Length		9.060		9.060		9.060		9.060					
A°		90°		90°		90°		90°					
1/2" T hole	End	.278		.276		.289		.293					
1/2" T hole	side	.273		.283		.292		.285					
	C	16°40'		16°41'		16°41'		16°41'					
	E	8°38'		8°38'		8°42'		8°38'					
	F	10°41'		10°41'		10°41'		10°41'					
Hole dia.		3/32		3/32		3/32		3/32					

INSPECTOR: Thomas Shear

RECEIVING INSPECTOR:

W.D.S. 10 Rev. 8 04/26/79

NOM. PIPE SIZE"	SCHED ULE	NOM. WALL 'T'"	O.D."	HOLE DIAM ETER"	HOLES 1/4T	HOLES 1/2T	HOLES 3/4T	NOTCHES CIRC. O.D.	NOTCHES CIRC. I.D.	NOTCHES AXIAL O.D.	NOTCHES AXIAL I.D.	NOTCHES Length"	NOM. ARC A°	B°	B" (O.D.)	C°	C" (O.D.)	E°	E"& F"	F°
6	120	.562	6.625	3/32	-	2	-	X	X	X	X	9	90	-	-	16.67	.964	8.65	.5	10.69

NOTE: Original dimensional requirements supplied to manufacturer.

General Data

1. E and F Dimension - minimum at bottom of notches (.500").
2. D Dimension - Typical all notches (10% of measured thickness) +.500" -.010".
3. A Dimension + to 360° and -.080" of arc.
4. Length +2" -.25".
5. Holes optional for T less than .8".
6. Flat blocks .8"T or less may contain 1/2T hole only.
7. Final acceptable dimensions to be based on intent.
8. Hole location to be based on actual "T".
9. Flat side of notches to be perpendicular notched surfaces, within 2°.
10. Side drilled holes to be within ± 1/32" tolerance.

Intent

1. C Dimension to be approximately 3/4" from edge of arc segment.
2. E and F dimension applicable to both sides of centerline so as to provide 1" long (at bottom) notches.
3. B Dimension to locate axial notches so as not to impose on end of hole at C location or on end of notches at centerline.
4. Circumferential reflectors to be positioned to allow 2T (Full Vee) calibration at 45° beam angle (not applicable for 1 1/2" Sch 80, 1 1/2" Sch 160, 2" Sch 80, 2" Sch 160, 3" Sch 40 & 3" Sch 80).
5. Circumferential holes and notches to be plus or minus .1" from ends.

11-26

BABCOCK & WILCOX

Tubular Products Division

ALLIANCE, OHIO-1 | BEAVER FALLS, PA.-2 | MILWAUKEE, WISCONSIN-3

TEST REPORT

CUSTOMER ORDER NO 405529-N | DATE | DATE | SHIPPING NUMBER 2

SOLD TO: GUYON ALLOYS INC
950 SOUTH 4TH ST
HARRISON, NJ 07029

SHIP TO:

NUCLEAR

Material was given a heat treatment consisting of heating to a minimum of 1900°F for a minimum of 10 minutes and water quenched.

STEEL WAS MELTED IN THE USA

SMLS CROLOY 316 EF CD AW PIPE TO ASTM A 312-74 & A376-74 & ASME SA 312 & 376 EXC .04 MIN CARB WITH CHK ANAL ON 2 PIPES FROM EA LOT & HT PER PARA 8 OF A/SA 312 & 376 INTERGRAN. CORROSION TEST PER HT TO ASTM-15TH A262 PRACTICEE

NO OIL PICKLED AND PASSIVATED 6" S/120

B & W ORDER NO | OD | WALL | FROM | CODE NO | "P" PARTIAL | "C" COMPLETE

ITEM	OD	WALL	LENGTH	SPECIAL MARKS	%	PCS	FOOTAGE	HYDRO TEST LBS PER 60 INCH	TESTS MADE	
-A04 1726-8 0253 000035 09 110000									ETCH	
01	6625	562	RL 20-27		C	13	301 04	2545 5 Sec. Hold	BEND	
PAPERS CONTD - INTERGRANULAR CORROSION TEST TO BE SHOW ON T/R 2 COPIES T/R TO MANAGER-QUALITY ASSURANCE - GUYON ALLOYS INC PO BOX 42345 - HOUSTON, TEXAS 77042 MARK B/L DELY VEH NOT TO EXCEED 13 FT 1 IN HIGH IN SHPTS TO HARRISON NJ WISE SHOW ON B/L THAT FRT BILL IS TO BE SENT TO SOLD TO									FLATTENING	OK
									FLANGE	
									EXPANSION	
									FLARE	
								Intergranular	CORROSION	OK
			Tooling Specialits 0351 Item 1						MICRO	
									ULTRASONIC	
									DYE PENETRANT	

CHEM ANALYSIS

ITEM	HEAT NO	CARB	MANG	SUL	PHOS	SIL	CHROM	NI	MO	CU	CB
	M9948	.059	1.74	.005	.017	.50	17.03	13.29	2.24		
	Tube Ch	.060	1.78	.007	.018	.51	16.96	13.20	2.20		
	Tube Ch	.058	1.78	.007	.018	.51	16.96	13.31	2.19		

ITEM	HEAT NO	ULTIMATE STRENGTH	YIELD POINT	% ELONG IN 2	REDUCT IN AREA	HARDNESS
		83400	47300	65		

STRIP [X] STD RD [ ] FULL SECTION [ ]

Q. A. APPROVED
BY: [signature] DATE: 12-12-75
GUYON ALLOYS INC

SWORN TO AND SUBSCRIBED BEFORE ME 11-26-75

[signature]
NOTARY PUBLIC
W. [illegible] County, Pa.
MY COMMISSION EXPIRES [illegible]

THIS IS TO CERTIFY THE ABOVE TUBES AND PIPE HAVE BEEN INSPECTED AND TESTED IN ACCORDANCE WITH AND HAVE MET ALL THE REQUIREMENTS OF THE SPECIFICATIONS

ch

THE BABCOCK & WILCOX COMPANY BY [signature]
C. C. Eaton

NEW YORK POWER AUTHORITY
INDIAN POINT NUCLEAR POWER PLANT
UNIT NO. 3
CALIBRATION BLOCKS

INDIAN POINT UNIT NO. 3 DESIGNATION	:	INT-22
COMPONENT/SYSTEM	:	6" SCH 80S SIS PIPING
SIZE/SCHEDULE	:	6" SCH 80S .432"T
MATERIAL	:	A312 TP304 STAINLESS STEEL
HEAT OR IDENTITY NUMBER	:	M3458

ASME SECTION V AND XI 1983 EDITION THROUGH SUMMER 1983 ADDENDA REQUIREMENTS:

1. Section V : T-110 and T-548
2. Section XI : Article III-1100, Supplement 7 and IMA-2250
3. Material : A312 TP316 Stainless Steel
4. Size/Schedule: 6" SCH 80S .432"T

WESTINGHOUSE ELECTRIC CORPORATION - NSID - INSPECTION SERVICE DESIGN:

Calibration block was designed to meet intent of ASME Boiler and Pressure Vessel Code Section XI 1974 Edition through Summer 1975 Addenda.

RECOMMENDATION:

Calibration block design follows the quidelines of Section V and Section XI - 1983 Edition through Summer 1983 Addenda for Austenitic Piping. Class 2 Piping less than or equal to 1/2 inch thickness no longer requires Volumetric examination per the requirements of Section XI - 1983 Edition through Summer 1983 Addenda. Modifications of this design to meet the requirements of Section V and Section XI - 1983 Edition through Summer 1983 Addenda for "ferritic piping and design T-547.1" would be to increase length to 8" and arc length to 160° and as required by Table III-3430-1 notch depth to 0.104T - 0.009T squared with tolerance of +10%-20%. P-Number Groupings for Materials A312 TP304 Stainless Steel and A312 TP316 Stainless Steel are equivalent.

NOTES:

1. WHEN MEASURED FROM EITHER SIDE OF CENTERLINE MINIMUM LENGTH AT BOTTOM OF AXIAL NOTCHES TO BE 0.5" AS SHOWN IN SIDE VIEW.
2. NOTCH DEPTH 10% OF MEASURED THICKNESS +0.005"-0.010".
3. PREP ALLOWED IN AREA OF SIDE DRILLED HOLE SHALL NOT INFRINGE ON HOLE SIZE REQUIREMENTS.
4. CIRCUMFERENTIAL HOLES AND NOTCHES TO BE PLUS OR MINUS 0.1" FROM ENDS.
5. LOCATE AXIAL NOTCHES SO AS NOT TO IMPOSE ON END OF HOLES OR ON END OF NOTCHES AT CENTERLINE.
6. FLAT SIDE OF NOTCHES TO BE PERPENDICULAR NOTCHED SURFACES, WITHIN 2°.
7. HOLE LOCATION TO BE BASED ON ACTUAL "T".
8. SIDE DRILLED HOLE DIAMETER TOLERANCE TO BE WITHIN ±0.03"
9. DRILL HOLES PERPENDICULAR TO RADIUS.
10. ARC DIMENSION +360° AND -0.080".
11. LENGTH TOLERANCE TO BE +2.00"-0.25"

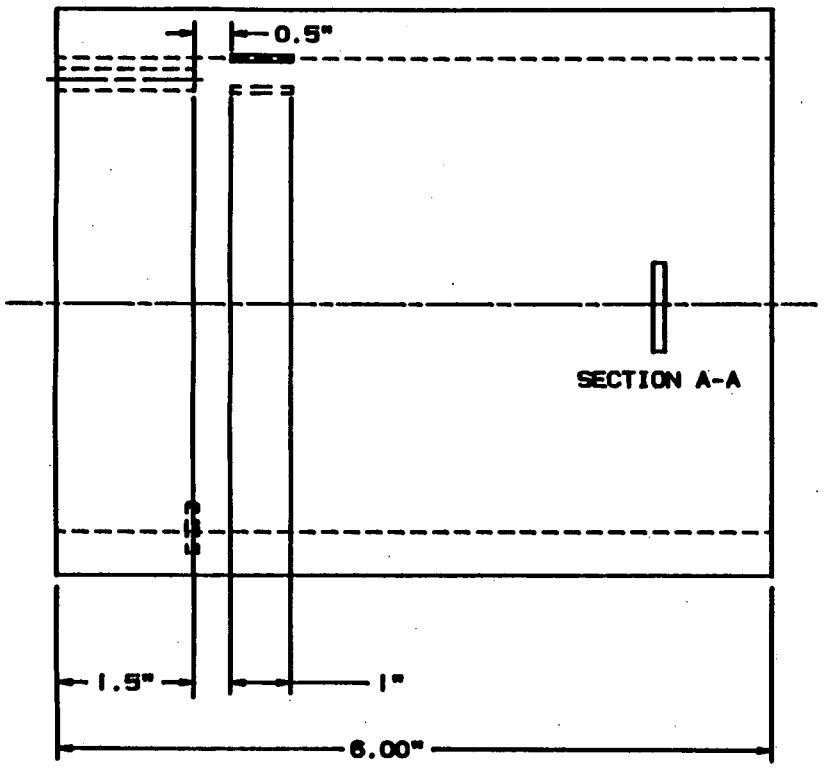

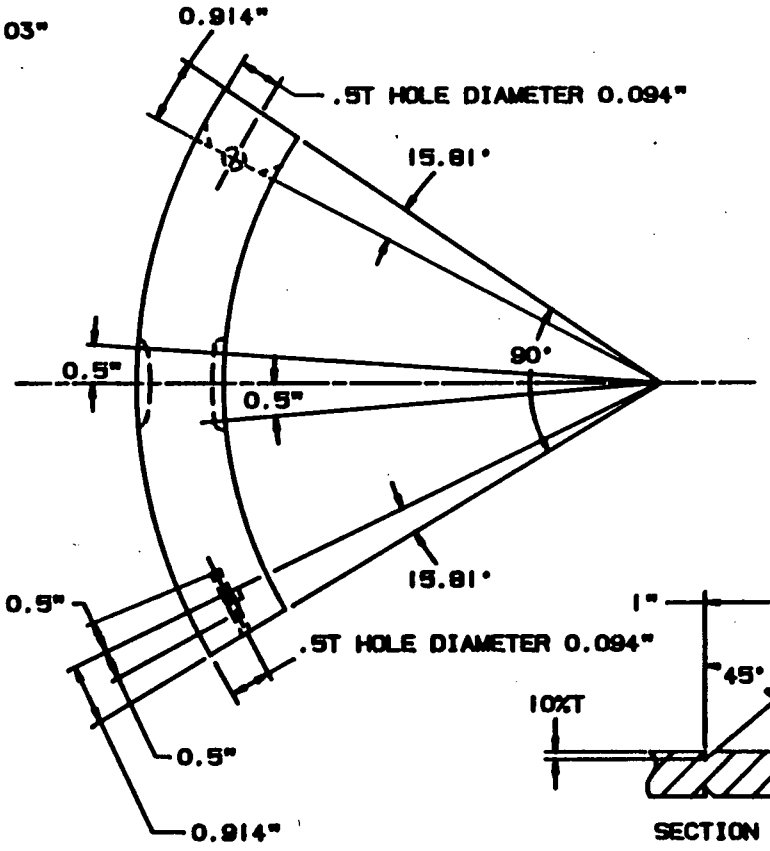

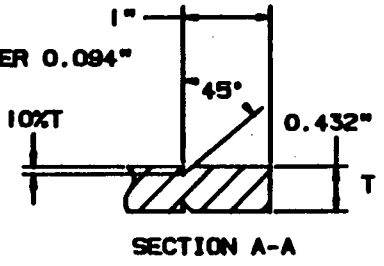

COMPUTER SYSTEM PLANT MODELING

NSSS TECHNICAL APPROVAL Philip C. Bulsa	11-20-86	Westinghouse Electric Corporation PLANT ENGINEERING DIVISION - PITTSBURGH, PA
LEVEL III REVIEW David Kund	11-24-86	TITLE CALIBRATION BLOCK INT-22 6" SCH 80S SIS PIPING 6" SCH 80S .432"T-E A312 TP304 STAINLESS STEEL HEAT NO.: M3459
		C W. NO. REV.

NSD PA1010

Nuclear Service Division
QUALITY RELEASE

QR- 1719 REV. O

PURCHASE ORDER	PART NAME	DRAWING & REV.
416203	UT Calibration Blocks	6003 Rev 5, 6004 Rev 4

PAR NO.	CHG. NOTICE NO.	P.O. ITEM NO.	PROJ./S.O. NO.	QTY. ON ORDER	QTY. RELEASED
0	1	14 & 6	IPPN-9327	42	41

SUPPLIER	E. SPEC. & REV.	ORDER
Tolly Specialties	N/A	COMPLETE ☑ YES ☐ NO

SERIAL OR IDENTIFICATION NOS.

UT # 214609 (A 4 & H), 152177 (A 4 & C), N13396 (A 4 & H), M7458 (A 4 & H), 103914 (B 4 & H), 05369 (A 4 & D)

The equipment shown hereon is released by W Quality Assurance. Shipment may be made subject to authorization by W Purchasing. In the Audit Checklist below, an A indicates acceptability, a C indicates a contingency and a W indicates that W QA has waived the auditing or witnessing of the attribute. All non-applicable items are lined out.

AUDIT CHECKLIST

☑	Material Certifications	☐	~~Non-Operating Electrical Tests~~
☐	~~Heat Treat Records~~	☐	~~Operating Electrical Test~~
☐	~~RT Film and Records~~	☐	~~Pressure Test~~
☐	~~PT/MT Records~~	☐	~~Seat Tightness Test~~
☑	Visual	☐	~~Performance Test~~
☑	Dimensional	☑	Cleanliness
☐	~~UT Records~~	☑	Packaging
☐	~~Personnel Qualification: Welding, NDT~~	☐	~~Code Form~~
☐		☐	~~Painting~~
☐		☑	C of C

DEVIATION NOTICES AND REMARKS (ALL DEVIATIONS HAVE BEEN APPROVED BY THE RESPONSIBLE WESTINGHOUSE ENGINEER UNLESS A SPECIFIC EXCEPTION IS STATED.)

THE SUPPLIER CERTIFIES that for the equipment and material released, all contractual requirements have been met. Approved deviations, if any, are listed above.

SUPPLIER SIGNATURE DATE

TITLE

The equipment shown hereon is released by Quality Assurance. Shipment may be made subject to authorization by Purchasing.

The equipment supplier has certified that the equipment above meets all requirements of the purchase order, drawings and specifications. Westinghouse has reviewed evidence supporting this release and except as specified above has detected no deviations from such requirements. This release does not waive any rights Westinghouse may have under the purchase order including Westinghouse's right to reject the equipment upon discovery of any such deviations after arrival at destination.

N R Moore 7-19-84

Westinghouse Quality Assurance Representative

SUPPLIER (ATTACH TO SHIPPING PAPERS)

TOOLING
SPECIALISTS
INCORPORATED

MACHINE TOOL BUILDERS — SPECIAL MACHINING — DIES — ENGINEERING SERVICE

P. O. BOX 251, LATROBE, PA. 15650 Phone: (412) 539-2534

LETTER OF COMPLIANCE

July 18, 1979

This is a statement of compliance to the requirements of Westinghouse Purchase Order Number 544-MXK-406203-RN.

All required processes, tests, and inspections have been performed. Inspection data sheets, heat treat charts, weld wire and material certifications are attached as required by the Purchase Order.

A listing of Purchase Order items in this shipment is attached.

Documented evidence of compliance supporting this certification is available at Tooling Specialists, Inc.

Sincerely yours,

Thomas D. Shearer

Thomas D. Shearer
Manager Special Products

TDS/sfz

193

INSPECTION REPORT

Page _____ of _____

TOOLING SPECIALISTS, INC.
Latrobe, Pa. 15650
Phone: (412) 539-2534

Dwg. #

P. O. #

Revision | Item

Work Order # 21-344

CUSTOMER:

PART DESCRIPTION:
6 Sch 80 HT. # M3458

IF OUT OF TOLERANCE, PLACE X IN BOX TO RIGHT OF DIMENSION.

DRAWING DIMENSIONS	A	B	Part No. C X	Part No. D X	Part No. E X	Part No. F X	Part No. G X	Part No. H X
Nom. wall T.	.435	.472	.457	.414	.430	.414	.457	.480
Cir. Notch O.D	.043	.047	.045	.041	.043	.041	.045	.048
I.D	.043	.047	.045	.041	.043	.041	.045	.048
Axial Notch O.D	.042	.046	.047	.042	.045	.040	.044	.048
S.D	.042	.046	.047	.042	.045	.040	.044	.048
Length	6.030	6.030	6.030	6.030	6.030	6.030	6.030	6.030
A°	90°	90°	90°	90°	90°	90°	90°	90°
1/8 dia.	3/32	3/32	3/32	3/32	3/32	3/32	3/32	3/32
1/8T hole, end	.210	.233	.238	.212	.225	.203	.220	.240
1/8T hole, side	.224	.240	.222	.205	.207	.212	.236	.234
C	15°49'	15°49'	15°49'	15°49'	15°49'	15°49'	15°49'	15°49'
E	8°39'	8°39'	8°39'	8°39'	8°39'	8°39'	8°39'	8°39'
F	10°8'	10°8'	10°8'	10°8'	10°8'	10°8'	10°8'	10°8'

INSPECTOR: Thomas J. Thomas

RECEIVING INSPECTOR:

W.D.S. 10 Rev. 7 03/18/79

NOM. PIPE SIZE"	SCHED ULE	NOM. WALL 'T'"	O.D."	HOLE DIAM ETER"	HOLES 1/4T	HOLES 1/2T	HOLES 3/4T	NOTCHES CIRC. O.D.	NOTCHES CIRC. I.D.	NOTCHES AXIAL O.D.	NOTCHES AXIAL I.D.	NOTCHES AXIAL Length"	NOM. ARC A°	B°	B" (O.D.)	C°	C" (O.D.)	E°	E"& F"	F°
6	80	.432	6.625	3/32	-	2	-	X	X	X	X	6	90	-	-	15.81	.914	8.65	.5	10.14

NOTE: Original dimensional requirements supplied to manufacturer.

General Data

1. E and F Dimension - minimum at bottom of notches (.500").
2. D Dimension - Typical all notches (10% of measured thickness) +.500" -.010".
3. A Dimension + to 360° and -.080" of arc.
4. Length +2" -.25".
5. Holes optional for T less than .8".
6. Flat blocks .8"T or less may contain 1/2T hole only.
7. Final acceptable dimensions to be based on intent.
8. Hole location to be based on actual "T".
9. Flat side of notches to be perpendicular notched surfaces, within 2°.
10. Side drilled holes to be within ± 1/32" tolerance.

Intent

1. C Dimension to be approximately 3/4" from edge of arc segment.
2. E and F dimension applicable to both sides of centerline so as to provide 1" long (at bottom) notches.
3. B Dimension to locate axial notches so as not to impose on end of hole at C location or on end of notches at centerline.
4. Circumferential reflectors to be positioned to allow 2T (Full Vee) calibration at 45° beam angle (not applicable for 1 1/2" Sch 80, 1 1/2" Sch 160, 2" Sch 80, 2" Sch 160, 3" Sch 40 & 3" Sch 80).
5. Circumferential holes and notches to be plus or minus .1" from ends.

BABCOCK & WILCOX
Tubular Products Division
BEAVER FALLS PA.

BABCOCK & WILCOX
TUBULAR PRODUCTS DIVISION
P.O. BOX 401
BEAVER FALLS, PA. 15010

CAPITOL PIPE & STEEL PRODUCTS CO
DIVISION OF TUBLINE CORPORATION
PO BOX 471
DALA-CYNWYD, PA 19004

TEST REPORT

CAPITOL PIPE & STEEL PRODUCTS INC
2300 ANTOINE & ORANGE STREETS
PEARLAND, TX 77581

DATE SHIPPED 2/19/79 | Lot No. 1.

DATE 2/20/79

ITEM	DESCRIPTION	PIECES	QUANTITY SHIPPED	TESTS MADE	
	HIGH TEMPERATURE SERVICE PIPE STAINLESS SMLS/CR0304/304H/LF/CD/AW ASTM-A-312 -77 ASME-SA-312		Footage	ETCH	
				BLND	
				FLATTENING	OK
	PRODUCT ANALYSIS PER PARA 8. PICKLED AND PASSIVATED WEIGHT PER FOOT 28.5700			FLANGE	
				EXPANSION	
01	6.625 OD X .432 WALL X RL 17/24			FLARE	
	MATERIAL WAS GIVEN A HEAT TREATMENT CONSISTING OF HEATING TO A MINIMUM OF 1900°F FOR A MIN. OF 10 MINUTES AND WATER QUENCHED. PROCEDURE: CD-AS-I REV 8/21/77 MATERIAL WAS MANUFACTURED UNDER A QUALITY ASSURANCE PROGRAM MEETING THE REQUIREMENTS OF ASME SEC. III NCA 3800. BOTH RAW MATERIALS AND FINISHED PRODUCTS ON THIS ORDER HAVE BEEN PRODUCED IN THE USA.		Tooling Spec. R9-1444A H98066 0616	CORROSION	
				MICRO	
				ULTRASONIC	
				DYE PENETRANT	Hydro 2000#psi 5 Sec.Hold
	6" Sch 80				CAPTIOL PIPE QUALITY ASSURANCE 4 ACCEPTED

CHEMICAL ANALYSIS

ITEM	HEAT NO	CARB	MANG	SUL	PHOS	SI	CHROM	NI	MO	CU	AL
	M3458	.041	1.80	.010	.034	.40	18.64	9.70			
	Tube Ck.	.042	1.82	.010	.035	.43	18.63	9.77			
	Tube Ck.	.040	1.84	.010	.035	.43	18.62	9.75			

ITEM	HEAT NO	ULT STRENGTH	YIELD	% ELONG IN 2"	REDUCT IN AREA	HARDNESS
		83200	44100	71		

STRIP [X] SID RD. [ ] FULL SECTION [ ]

SIGNED TO AND SUBSCRIBED BEFORE ME 2/22/79

THIS IS TO CERTIFY THE MATERIAL LISTED HEREIN HAS BEEN INSPECTED AND TESTED IN ACCORDANCE WITH AND PASSED ALL THE REQUIREMENTS OF THE SPECIFICATION
THE BABCOCK & WILCOX COMPANY
C. C. EATON

Notary Public
W. Montgomery Co., Bucks County, PA

NEW YORK POWER AUTHORITY
INDIAN POINT NUCLEAR POWER PLANT
UNIT NO. 3
CALIBRATION BLOCKS

INDIAN POINT UNIT NO. 3 DESIGNATION	:	INT-23
COMPONENT/SYSTEM	:	6" SCH 80S MAINSTEAM PIPING
SIZE/SCHEDULE	:	6" SCH 80S .432"T
MATERIAL	:	A106 GRADE B CARBON STEEL
HEAT OR IDENTITY NUMBER	:	240393

ASME SECTION V AND XI 1983 EDITION THROUGH SUMMER 1983 ADDENDA REQUIREMENTS:

1. Section V : T-547
2. Section XI : III-3400
3. Material : A106 Grade B Carbon Steel
4. Size/Schedule: 6" SCH 80S .432"T

WESTINGHOUSE ELECTRIC CORPORATION - NSID - INSPECTION SERVICE DESIGN:

Calibration block was designed to meet intent of ASME Boiler and Pressure Vessel Code Section XI 1974 Edition through Summer 1975 Addenda.

RECOMMENDATION:

Calibration block design follows the quidelines of Section V and Section XI - 1983 Edition through Summer 1983 Addenda except for arc length of 160° instead of 90° and length of 8" instead of 6" as required by Figure T-547.1 and as required by Table III-3430-1 notch depth to 0.104T - 0.009T squared with tolerance of +10%-20%. Class 2 Piping less than or equal to 1/2 inch thickness no longer requires Volumetric examination per the requirements of Section XI - 1983 Edition through Summer 1983 Addenda.

NOTES:

1. WHEN MEASURED FROM EITHER SIDE OF CENTERLINE MINIMUM LENGTH AT BOTTOM OF AXIAL NOTCHES TO BE 0.5" AS SHOWN IN SIDE VIEW.
2. NOTCH DEPTH 10% OF MEASURED THICKNESS +0.005"-0.010".
3. PREP ALLOWED IN AREA OF SIDE DRILLED HOLE SHALL NOT INFRINGE ON HOLE SIZE REQUIREMENTS.
4. CIRCUMFERENTIAL HOLES AND NOTCHES TO BE PLUS OR MINUS 0.1" FROM ENDS.
5. LOCATE AXIAL NOTCHES SO AS NOT TO IMPOSE ON END OF HOLES OR ON END OF NOTCHES AT CENTERLINE.
6. FLAT SIDE OF NOTCHES TO BE PERPENDICULAR NOTCHED SURFACES, WITHIN 2°.
7. HOLE LOCATION TO BE BASED ON ACTUAL "T".
8. SIDE DRILLED HOLE DIAMETER TOLERANCE TO BE WITHIN ±0.03"
9. DRILL HOLES PERPENDICULAR TO RADIUS.
10. ARC DIMENSION +360° AND -0.080".
11. LENGTH TOLERANCE TO BE +2.00"-0.25"

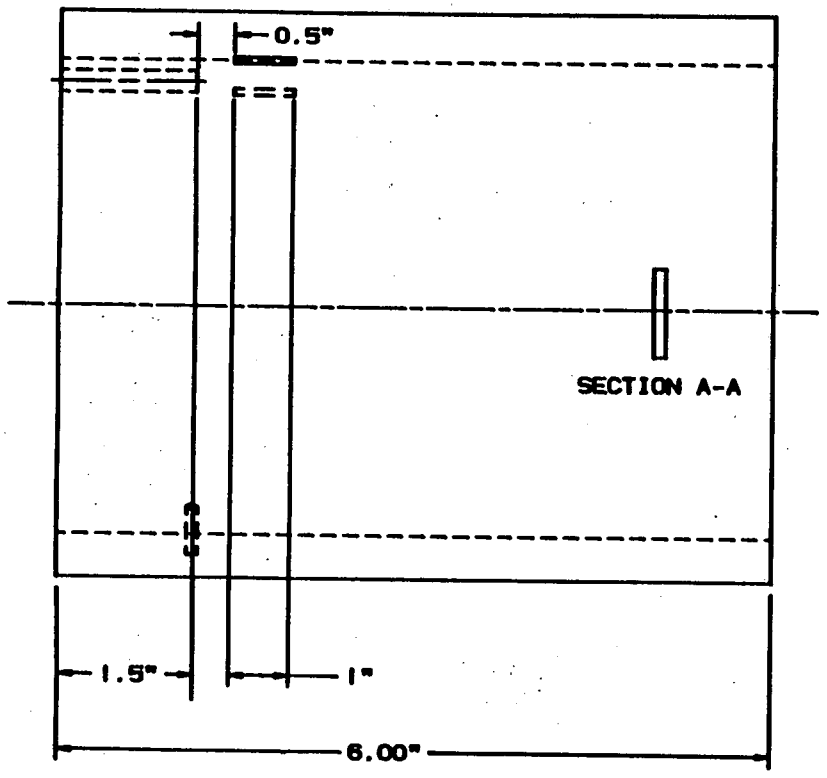

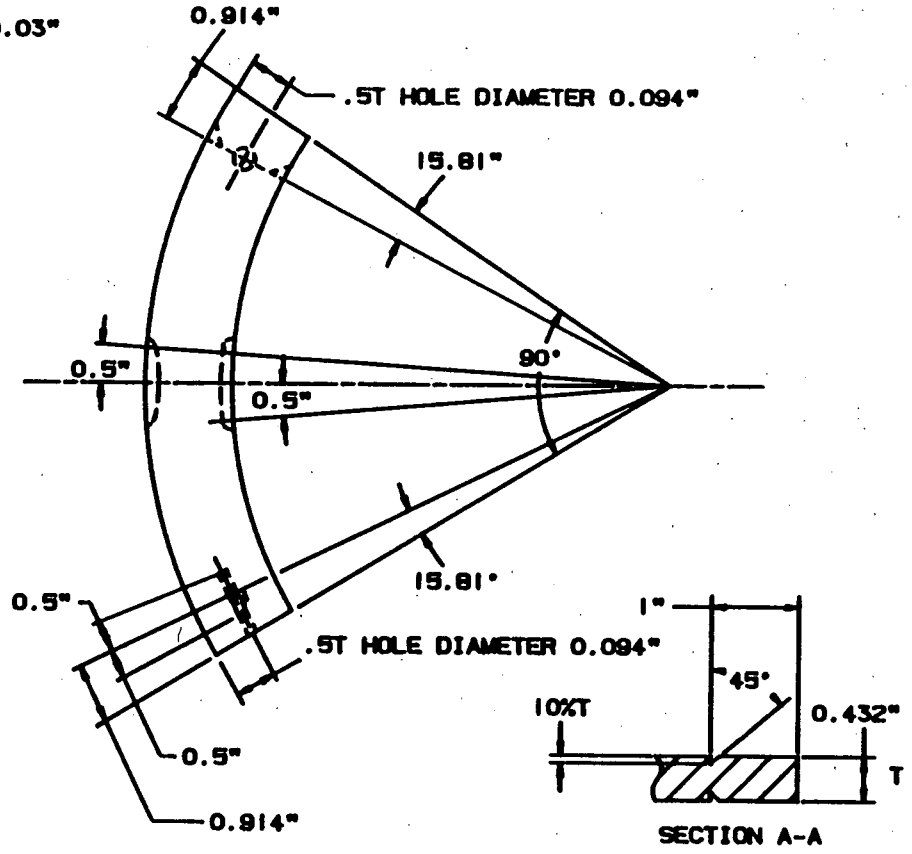

COMPUTER SYSTEM PLANT MODELING

MECH. TECHNICAL REVIEWER Phillip C. Burkes	11-20-86	Westinghouse Electric Corporation PLANT ENGINEERING DIVISION - PITTSBURGH, PA
LEVEL III REVIEW David Krumb	11-20-86	TITLE CALIBRATION BLOCK INT-23 6" SCH 80S MAINSTEAM PIPING 6" SCH 80S .432"T-A A106 GRADE B CARBON STEEL HEAT NO.: 240393
		C DWG. NO. REV.

REVISION

NSD PA1010

Nuclear Service Division
QUALITY RELEASE

QR- 1308 REV. O

PURCHASE ORDER	PART NAME	DRAWING & REV.
544MXK394102RN	CALIBRATION CLOCKS	W005[illegible] — W004[illegible]

PAR NO.	CHG. NOTICE NO.	P.O. ITEM NO.	PROJ./S.O. NO.	QTY. ON ORDER	QTY. RELEASED
000	000	001-002003-004	VISN 9327	17 PCS	17 PCS

SUPPLIER	E. SPEC. & REV.	ORDER
TOOLING SPECIALISTS INC.	NA	COMPLETE ☒ YES ☐ NO

SERIAL OR IDENTIFICATION NOS.

001, 8 PCS, HT 805 2221 — 002 3 PCS, HT M2060 — 003, 4 PCS, HT 01038 — 004, 2 PCS HT 240 393

The equipment shown hereon is released by W Quality Assurance. Shipment may be made subject to authorization by W Purchasing. In the Audit Checklist below, an A indicates acceptability, a C indicates a contingency and a W indicates that W QA has waived the auditing or witnessing of the attribute. All non-applicable items are lined out.

AUDIT CHECKLIST

☐ Material Certifications (W) FURNISHED	☐ ~~Non-Operating Electrical Tests~~
☐ ~~Heat Treat Records~~	☐ ~~Operating Electrical Test~~
☐ ~~RT Film and Records~~	☐ ~~Pressure Test~~
☐ ~~PT/MT Records~~	☐ ~~Seat Tightness Test~~
☒ Visual	☐ ~~Performance Test~~
☒ Dimensional	☒ Cleanliness
☐ ~~UT Records~~	☒ Packaging
☐ ~~Personnel Qualification: Welding, NDT~~	☐ ~~Code Form~~
☐	☐ ~~Painting~~
☐	☐

DEVIATION NOTICES AND REMARKS (ALL DEVIATIONS HAVE BEEN APPROVED BY THE RESPONSIBLE WESTINGHOUSE ENGINEER UNLESS A SPECIFIC EXCEPTION IS STATED.)

THE SUPPLIER CERTIFIES that for the equipment and material released, all contractual requirements have been met. Approved deviations, if any, are listed above.

SUPPLIER SIGNATURE [illegible] DATE 11-21-[illegible]

TITLE

The equipment shown hereon is released by (W) Quality Assurance. Shipment may be made subject to authorization by (W) Purchasing.

The equipment supplier has certified that the equipment above meets all requirements of the purchase order, drawings and specifications. Westinghouse has reviewed evidence supporting this release and except as specified above has detected no deviations from such requirements. This release does not waive any rights Westinghouse may have under the purchase order including Westinghouse's right to reject the equipment upon discovery of any such deviations after arrival at destination.

[illegible] 4-30-79

Westinghouse Quality Assurance Representative

TOOLING
SPECIALISTS
INCORPORATED

MACHINE TOOL BUILDERS — SPECIAL MACHINING — DIES — ENGINEERING SERVICE

P. O. BOX 251, LATROBE, PA. 15650 Phone: (412) 539-2534

LETTER OF COMPLIANCE

April 27, 1979

This is a statement of compliance to the requirements of Westinghouse Purchase Order Number 544-MXK-294102-RN.

All required processes, tests and inspections have been performed. Inspection data sheets, heat treat charts, weld wire and material certifications are attached as required by the Purchase Order.

A listing of Purchase Order items in this shipment is attached.

Documented evidence of compliance supporting this certification is available at Tooling Specialists.

Sincerely yours,

Thomas D. Shearer

Thomas D. Shearer
Manager Special Products

TDS/sfz

INSPECTION REPORT

Page 1 of

TOOLING SPECIALISTS, INC.
Latrobe, Pa. 15650
Phone: (412) 539-2534

Dwg. #

Revision

Item

P. O. #

Work Order # 071-257

CUSTOMER:

PART DESCRIPTION:
6" Sch 80 Ht # 240323

IF OUT OF TOLERANCE, PLACE X IN BOX TO RIGHT OF DIMENSION.

DRAWING DIMENSIONS		Part No. A	X	Part No. B	X	Part No.	X	Part No.	X	Part No.	X	Part No.
Nom. Wall Thickness		.425		.454								
Cir. Notch	OD	.042		.045								
	ID	.042		.045								
Axial Notch	OD	.042		.044								
	ID	.042		.044								
Arc °		90°		90°								
Length		6.200		6.200								
1/2T Hole	End 3/32 dia.	.213		.224								
1/2T Hole	Side 3/32 dia.	.219		.219								
	C	15°48'		15°48'								
	E	8°39'		8°39'								
	F	10°8'		10°8'								

INSPECTOR: Thomas D Shaw 4/13/79

RECEIVING INSPECTOR:

202

W.D.S. 10 Rev. 6 02/02/79

NOM. PIPE SIZE"	SCHED ULE	NOM. WALL 'T'"	O.D."	HOLE DIAM ETER"	HOLES 1/4T	HOLES 1/2T	HOLES 3/4T	NOTCHES CIRC. O.D.	NOTCHES CIRC. I.D.	NOTCHES AXIAL O.D.	NOTCHES AXIAL I.D.	NOTCHES AXIAL Length"	NOM. ARC A°	B°	B" (O.D.)	C°	C" (O.D.)	E°	E"& F"	F°
6	80	.432	6.625	3/32	-	2	-	X	X	X	X	6	90	-	-	15.81	.914	8.65	.5	10.14

NOTE: Original dimensional requirements supplied to manufacturer.

General Data

1. E and F Dimension - minimum at bottom of notches (.500").
2. D Dimension - Typical all notches (10% of measured thickness) +.500" -.010".
3. A Dimension + to 360° and -.080" of arc.
4. Length +2" -.25".
5. Holes optional for T less than .8".
6. Flat blocks .8"T or less may contain 1/2T hole only.
7. Final acceptable dimensions to be based on intent.
8. Hole location to be based on actual "T".
9. Flat side of notches to be perpendicular notched surfaces, within 2°.
10. Side drilled holes to be within ± 1/32" tolerance.

Intent

1. C Dimension to be approximately 3/4" from edge of arc segment.
2. E and F dimension applicable to both sides of centerline so as to provide 1" long (at bottom) notches.
3. B Dimension to locate axial notches so as not to impose on end of hole at C location or on end of notches at centerline.
4. Circumferential reflectors to be positioned to allow 2T (Full Vee) calibration at 45° beam angle (not applicable for 1 1/2" Sch 80, 1 1/2" Sch 160, 2" Sch 80, 2" Sch 160, 3" Sch 40 & 3" Sch 80).
5. Circumferential holes and notches to be plus or minus .1" from ends.

FORM P-94-80 (6/62)

ARMCO

ARMCO STEEL CORPORATION
AMBRIDGE WORKS
Ambridge, Pennsylvania

505
stock

REPORT OF TESTS

32729

CUSTOMER National Valve and Mfg. Co. DATE 6-20-74

SPECIFICATION ASTM A-106-72A / ASME SA-106 OUR ORDER NO. 006747100-0014

MATERIAL Smls Gr. B Steel Pipe CUSTOMER'S ORDER NO. 32729

ITEM	IDENTIFICATION	TENSILE TESTS YIELD PSI	TENSILE TESTS ULTIMATE PSI	TENSILE TESTS % ELONG. IN 2 IN.	HYDRO TEST P.S.I.	HEAT NUMBER	ANALYSIS C	Mn	P	S	Si	Ni	Cr	Mo
					#	✓ ✓	23	78	012	021	18			
5	6 5/8 x 432	46900	73500	42.0	2700	240393	24	77	010	022	17			
					#	✓	25	86	007	019	20			
9	14 x 375	42500	73600	42.0	1100	242005	24	87	006	020	21			
						✓	20	80	010	020	16			
	"	45200	68400	42.0	"	242084	21	81	009	021	17			
	Flattening	Tests		OK										

THE CHEMICAL ANALYSES AND PHYSICAL OR MECHANICAL TESTS REPORTED ABOVE ARE CORRECT AS CONTAINED IN THE RECORDS OF THE CORPORATION.

ARMCO STEEL CORPORATION

William M. Evans

NEW YORK POWER AUTHORITY
INDIAN POINT NUCLEAR POWER PLANT
UNIT NO. 3
CALIBRATION BLOCKS

INDIAN POINT UNIT NO. 3 DESIGNATION	:	INT-24
COMPONENT/SYSTEM	:	6" SCH 40S RHR PIPING
SIZE/SCHEDULE	:	6" SCH 40S .280"T
MATERIAL	:	A376 TP304 STAINLESS STEEL
HEAT OR IDENTITY NUMBER	:	M9959

ASME SECTION V AND XI 1983 EDITION THROUGH SUMMER 1983 ADDENDA REQUIREMENTS:

1. Section V : T-110 and T-548
2. Section XI : Article III-1100, Supplement 7 and IMA-2250
3. Material : A312 TP304 Stainless Steel
4. Size/Schedule: 6" SCH 40S .280"T

WESTINGHOUSE ELECTRIC CORPORATION - NSID - INSPECTION SERVICE DESIGN:

Calibration block was designed to meet intent of ASME Boiler and Pressure Vessel Code Section XI 1974 Edition through Summer 1975 Addenda.

RECOMMENDATION:

Calibration block design follows the quidelines of Section V and Section XI - 1983 Edition through Summer 1983 Addenda for Austenitic Piping. Class 2 Piping less than or equal to 1/2 inch thickness no longer requires Volumetric examination per the requirements of Section XI - 1983 Edition through Summer 1983 Addenda. Modifications of this design to meet the requirements of Section V and Section XI - 1983 Edition through Summer 1983 Addenda for "ferritic piping and design T-547.1" would be to increase length to 8", arc length to 160° and add I. D. circumferential notch. P-Number Groupings for Materials A376 TP304 Stainless Steel and A312 TP304 Stainless Steel are equivalent.

NOTES:

1. WHEN MEASURED FROM EITHER SIDE OF CENTERLINE MINIMUM LENGTH AT BOTTOM OF AXIAL NOTCHES TO BE 0.5" AS SHOWN IN SIDE VIEW.
2. NOTCH DEPTH 10% OF MEASURED THICKNESS +0.005"-0.010".
3. PREP ALLOWED IN AREA OF SIDE DRILLED HOLE SHALL NOT INFRINGE ON HOLE SIZE REQUIREMENTS.
4. CIRCUMFERENTIAL HOLES AND NOTCHES TO BE PLUS OR MINUS 0.1" FROM ENDS.
5. LOCATE AXIAL NOTCHES SO AS NOT TO IMPOSE ON END OF HOLES OR ON END OF NOTCHES AT CENTERLINE.
6. FLAT SIDE OF NOTCHES TO BE PERPENDICULAR NOTCHED SURFACES, WITHIN 2°.
7. HOLE LOCATION TO BE BASED ON ACTUAL "T".
8. SIDE DRILLED HOLE DIAMETER TOLERANCE TO BE WITHIN ±0.03"
9. DRILL HOLES PERPENDICULAR TO RADIUS.
10. ARC DIMENSION +360° AND 0.080".
11. LENGTH TOLERANCE TO BE +2.00"-0.25"

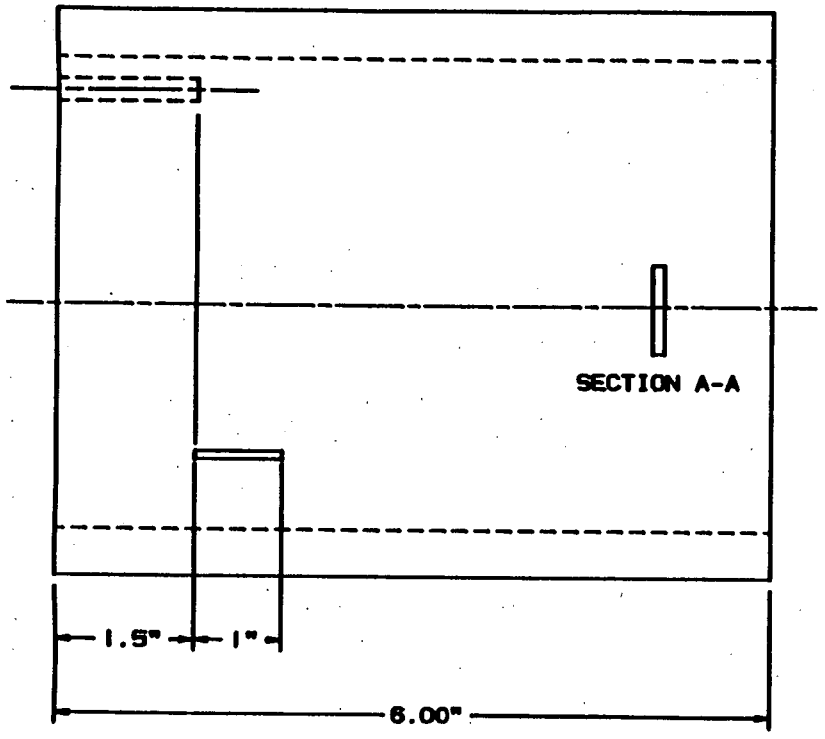

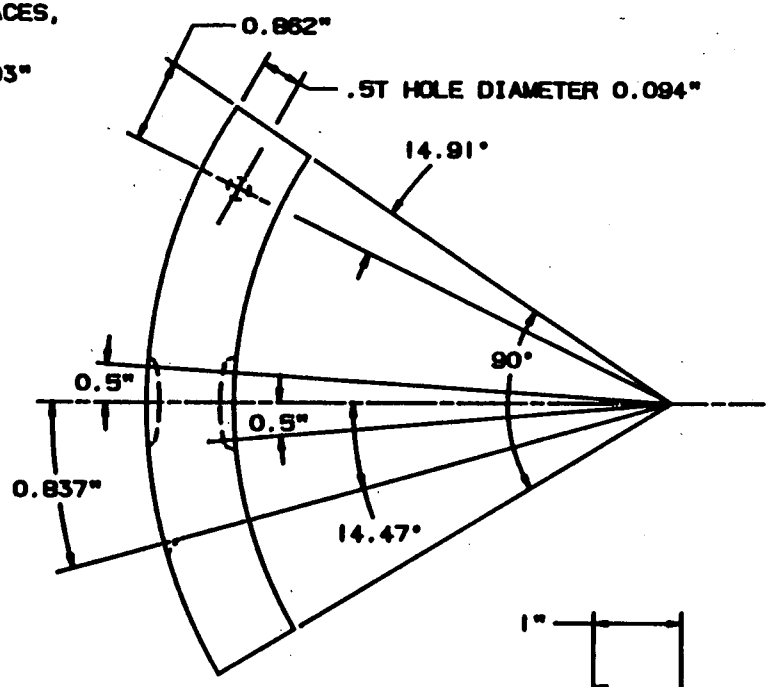

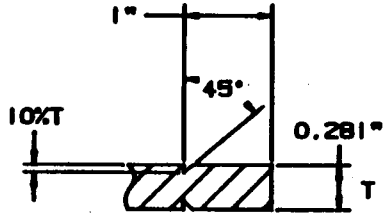

SECTION A-A

COMPUTER SYSTEM PLANT MODELING

NEED TECHNICAL APPROVAL Philip E. Bukra	11-20-86	Westinghouse Electric Corporation FLAME ENGINEERING DIVISION - PITTSBURGH, PA
LEVEL III REVIEW David Kendl	11-20-86	TITLE CALIBRATION BLOCK INT-24 6" SCH 40S RHR PIPING 6" SCH 40S .281"T-B A376 TP304 STAINLESS STEEL HEAT NO.: M9989
		SIZE C DWG. NO. REV.

NSD PA1010

Nuclear Service Division
QUALITY RELEASE

QR- 1619 REV. 0

PURCHASE ORDER	PART NAME	DRAWING & REV.
544-XK-287369-RN	UT CALIBRATION BLOCKS	W007 Rev 1, W004 Rev 4, W003 Rev 3, W005 Rev 3, W005 Rev 5

PAR NO.	CHG. NOTICE NO.	P.O. ITEM NO.	PROJ./S.O. NO.	QTY. ON ORDER	QTY. RELEASED
0	3	001 thru 005, 007 thru 016	WFSN-9323	66	66

SUPPLIER	E. SPEC. & REV.	ORDER
TOOLING SPECIALISTS	N/A	COMPLETE ☑ YES ☐ NO

SERIAL OR IDENTIFICATION NOS.
HT #s: 87623, 01003 (A thru D), 26896 (A & B), M9290 (A & B), M2060 (A & B), D61232 (A thru F), 3122-5-2 (A thru E), 2637-4-2 (A thru F), M9959 (A thru D), M0937 (A thru E), 1971-12-1 (A thru F), 805222-1 (A thru F),

The equipment shown hereon is released by W Quality Assurance. Shipment may be made subject to authorization by W Purchasing. In the Audit Checklist below, an A indicates acceptability, a C indicates a contingency and a W indicates that W QA has waived the auditing or witnessing of the attribute. All non-applicable items are lined out.

AUDIT CHECKLIST

☑ A Material Certifications	~~Non-Operating Electrical Tests~~
~~Heat Treat Records~~	~~Operating Electrical Test~~
~~RT Film and Records~~	~~Pressure Test~~
~~PT/MT Records~~	~~Seat Tightness Test~~
☑ A Visual	~~Performance Test~~
☑ A Dimensional	☑ A Cleanliness
~~UT Records~~	☑ W Packaging
~~Personnel Qualification: Welding, NDT~~	~~Code Form~~
	Painting

DEVIATION NOTICES AND REMARKS (ALL DEVIATIONS HAVE BEEN APPROVED BY THE RESPONSIBLE WESTINGHOUSE ENGINEER UNLESS A SPECIFIC EXCEPTION IS STATED.)

Several pieces for a certain heat no. noted above by alphanumeric designation.

THE SUPPLIER CERTIFIES that for the equipment and material released, all contractual requirements have been met. Approved deviations, if any, are listed above.

SUPPLIER SIGNATURE [signature] DATE 3/27/79
TITLE

The equipment shown hereon is released by W Quality Assurance. Shipment may be made subject to authorization by W Purchasing.

The equipment supplier has certified that the equipment above meets all requirements of the purchase order, drawings and specifications. Westinghouse has reviewed evidence supporting this release and except as specified above has detected no deviations from such requirements. This release does not waive any rights Westinghouse may have under the purchase order including Westinghouse's right to reject the equipment upon discovery of any such deviations after arrival at destination.

K. R. Moran 3-27-79
Westinghouse Quality Assurance Representative

SUPPLIER (ATTACH TO SHIPPING PAPERS)

TOOLING
SPECIALISTS
INCORPORATED

MACHINE TOOL BUILDERS — SPECIAL MACHINING — DIES — ENGINEERING SERVICE

P. O. Box 251, Latrobe, Pa. 15650 Phone: (412) 539-2534

Letter of Compliance

March 27, 1979

This is a statement of compliance to the requirements of Westinghouse Purchase Order Number 544-XK-287369-RN.

All required processes, tests and inspections have been performed. Inspection data sheets, heat treat charts, weld wire and material certifications are attached as required by the Purchase Order.

A listing of Purchase Order items in this shipment is attached.

Documented evidence of compliance supporting this certification is available at Tooling Specialists.

Sincerely yours,

Thomas D Shearer

Thomas D. Shearer
Manager Special Products

TDS/sfz

INSPECTION REPORT

Page _____ of _____

TOOLING SPECIALISTS, INC.
Latrobe, Pa. 15650
Phone: (412) 539-2534

Dwg. #
P. O. #
Revision
Item
Work Order # 21-077

CUSTOMER:

W 005 Rev 3

PART DESCRIPTION:

6 Sch 40 S Ht. # M 9959

IF OUT OF TOLERANCE, PLACE X IN BOX TO RIGHT OF DIMENSION.

DRAWING DIMENSIONS		Part No. A	X	Part No. B	X	Part No. C	X	Part No. D	X	Part No.	X	Part No.	X
Nom. Wall Thickness		.290		.268		.270		.292					
Cir. Notch	O.D.	.029		.026		.027		.029					
	I.D.	.029		.026		.027		.029					
Axial Notch	O.D.	.028		.027		.028		.029					
A°		90°.		90°		90°		90°					
Length		6"		6"		6"		6"					
1/2T Hole, 3/32 dia.		.145		.134		.135		.146					
	D	14°39'		14°39'		14°39'		14°39'					
	C	14°55'		14°55'		14°55'		14°55'					
	E	8°39'		8°39'		8°39'		8°39'					
	F	9°34'		9°34'		9°34'		9°34'					

INSPECTOR: [illegible signature] 3/27/91

RECEIVING INSPECTOR:

W.D.S. 10

NOM. PIPE SIZE"	SCHED ULE	NOM. WALL 'T'"	O.D."	HOLE DIAM ETER"	HOLES 1/4T	1/2T	3/4T	NOTCHES CIRC. O.D.	CIRC. I.D.	AXIAL O.D.	AXIAL I.D.	Length"	NOM. ARC A°	B°	B" (O.D.)	C°	C" (O.D.)	E°	E"& F"	F°
6	40S	.281	6.625	3/32	-	1	-	X	X	X	-	6	90	14.47	.837	14.91	.862	8.65	.5	9.56

NOTE: Original dimensional requirements supplied to manufacturer.

General Data

1. E and F Dimension - minimum at bottom of notches (.500").
2. D Dimension - Typical all notches (10% of measured thickness) +.500" -.010".
3. A Dimension + to 360° and -.080" of arc.
4. Length +2" -.25".
5. Holes optional for T less than .8".
6. Flat blocks .8"T or less may contain 1/2T hole only.
7. Final acceptable dimensions to be based on intent.
8. Hole location to be based on actual "T".
9. Flat side of notches to be perpendicular notched surfaces, within 2°.
10. Side drilled holes to be within ± 1/32" tolerance.

Intent

1. C Dimension to be approximately 3/4" from edge of arc segment.
2. E and F dimension applicable to both sides of centerline so as to provide 1" long (at bottom) notches.
3. B Dimension to locate axial notches so as not to impose on end of hole at C location or on end of notches at centerline.
4. Circumferential reflectors to be positioned to allow 2T (Full Vee) calibration at 45° beam angle (not applicable for 1 1/2" Sch 80, 1 1/2" Sch 160, 2" Sch 80, 2" Sch 160, 3" Sch 40 & 3" Sch 80).
5. Circumferential holes and notches to be plus or minus .1" from ends.

BABCOCK & WILCOX
Tubular Products Division

ALLIANCE, OHIO-1 | BEAVER FALLS, PA.-2 | MILWAUKEE, WISCONSIN-3

TEST REPORT

CUSTOMER ORDER NO. 4E-61665-3 | DATE 12/8/75 | SHIPPING NUMBER 1205562

SOLD TO
A.B. MURRAY COMPANY, INC.
PO BOX 476
ELIZABETH, NEW JERSEY 07207

SHIP TO
A B MURRAY CO INC
FOOT OF JUNIPER ST
MCKEESPORT PENNSYLVANIA

6" Sch 40
STEEL WAS MELTED IN THE USA
6" Sch 40

SPECIFICATION: SEAMLESS CROLOY 304 EF CD AW PIPE TO ASTM A 312-73 & ASME SA 312 & ASTM A 376-72 AND ASME SA 376 & ASTM A 262 PRACTICE E

MARK SHIP
1-NO OIL PICKLE

INSP.

— R & W ORDER NO — | O.D. | WALL | LENGTH | CODE NO | "P" PARTIAL — "C" COMPLETE

ITEM	O.D.	WALL	LENGTH	SPECIAL MARKS	T	PCS.	FOOTAGE	HYDRO TEST LBS. PER SQ. INCH	TESTS MADE
-A04 1715-2025 1900035 09 10000									ETCH
02 6625	280	RL	17-24	31030000	C	24	571 09	1300 5 sec. hold	BEND
PAPERS CONTINUED 1 P/L AND B/L WITH SHPT. 1 P/L IN HANDS OF DRIVER. 4 NOTARIZED T/R WITH INV, 1 WITH SHPT. SHOW ON B/L THAT FRT BILL IS TO BE SENT TO SOLD TO									FLATTENING ok
									FLANGE
									EXPANSION
									FLARE
								Practice E A262	CORROSION Intergranular ok
									MICRO
									ULTRASONIC
									DYE PENETRANT

CHEMICAL ANALYSIS

ITEM	HEAT NO	CARB	MANG	SUL	PHOS	SIL	CHROM	NI	MO	CU	CB	T	Co
	M9950	.055	1.71	.016	.027	.49	18.62	10.39					.13
	tube ck	.052	1.74	.015	.025	.50	18.62	10.52					.14
	tube ck	.055	1.69	.015	.021	.49	18.65	10.18					.14
	M9959	.070	1.84	.015	.024	.45	18.40	10.29					.08
	tube ck	.058	1.82	.015	.022	.45	18.48	10.22					.08
	tube ck	.056	1.83	.015	.024	.45	18.46	10.22					.03

ITEM	HEAT NO.	ULTIMATE STRENGTH	YIELD POINT	% ELONG IN 2"	REDUCT. IN AREA	HARDNESS
	M9950	82800	34000	69		
	M9959	79200	37800	66		

STRIP [X] STD. RD. [ ] FULL SECTION [ ]

SWORN TO AND SUBSCRIBED BEFORE ME 12/9/75

Rita J. Kile
Notary Public
W. Mifflin Borough, Allegheny Co., Pa.
My Commission Expires
Commission Expires 3 1978

THIS IS TO CERTIFY THE ABOVE TUBES AND PIPE HAVE BEEN INSPECTED AND TESTED IN ACCORDANCE WITH AND HAVE MET ALL THE REQUIREMENTS OF THE SPECIFICATIONS.

vj

THE BABCOCK & WILCOX COMPANY BY

NEW YORK POWER AUTHORITY
INDIAN POINT NUCLEAR POWER PLANT
UNIT NO. 3
CALIBRATION BLOCKS

INDIAN POINT UNIT NO. 3 DESIGNATION	:	INT-25
COMPONENT/SYSTEM	:	4" SCH 160 PRESSURIZER RELIEF PIPING AND CONTROL ROD DRIVE MECHANISMS
SIZE/SCHEDULE	:	4" SCH 160 .531"T
MATERIAL	:	A376 TP304 STAINLESS STEEL
HEAT OR IDENTITY NUMBER	:	01038

ASME SECTION V AND XI 1983 EDITION THROUGH SUMMER 1983 ADDENDA REQUIREMENTS:

1. Section V : T-110 and T-548
2. Section XI : Article III-1100, Supplement 7 and IMA-2250
3. Material : Pressurizer Relief Piping: A376 TP316 Stainless Steel; Control Rod Drive Mechanisms: SB167 Inconnel to 304 Stainless Steel
4. Size/Schedule: Pressurizer Relief Piping, 4" SCH 160 .531"T; Control Rod Drive Mechanisms, 4" - .625"T

WESTINGHOUSE ELECTRIC CORPORATION - NSID - INSPECTION SERVICE DESIGN:

Calibration block was designed to meet intent of ASME Boiler and Pressure Vessel Code Section XI 1974 Edition through Summer 1975 Addenda.

RECOMMENDATION:

Calibration block design follows the quidelines of Section V and Section XI - 1983 Edition through Summer 1983 Addenda for Austenitic Piping. Modifi- cations of this design to meet the requirements of Section V and Section XI - 1983 Edition through Summer 1983 Addenda for "ferritic piping and design T-547.1" would be to increase length to 8", arc length to 270° and as required by Table III-3430-1 notch depth to 0.104T - 0.009T squared with tolerance of +10-20%. Section XI - 1983 Edition through Summer 1983 Addenda allows for a Volumetric or surface examination of Control Rod Drive Mechanisms which would delete any requirement for a calibration block if surface examination is performed. P-Number Groupings for Materials A376 TP304 Stainless Steel and A376 TP316 Stainless Steel are equivalent.

NOTES:

1. WHEN MEASURED FROM EITHER SIDE OF CENTERLINE MINIMUM LENGTH AT BOTTOM OF AXIAL NOTCHES TO BE 0.5" AS SHOWN IN SIDE VIEW.
2. NOTCH DEPTH 10% OF MEASURED THICKNESS +0.005" - 0.010".
3. PREP ALLOWED IN AREA OF SIDE DRILLED HOLE SHALL NOT INFRINGE ON HOLE SIZE REQUIREMENTS.
4. CIRCUMFERENTIAL HOLES AND NOTCHES TO BE PLUS OR MINUS 0.1" FROM ENDS.
5. LOCATE AXIAL NOTCHES SO AS NOT TO IMPOSE ON END OF HOLES OR ON END OF NOTCHES AT CENTERLINE.
6. FLAT SIDE OF NOTCHES TO BE PERPENDICULAR NOTCHED SURFACES, WITHIN 2°.
7. HOLE LOCATION TO BE BASED ON ACTUAL "T".
8. SIDE DRILLED HOLE DIAMETER TOLERANCE TO BE WITHIN ± 0.03"
9. DRILL HOLES PERPENDICULAR TO RADIUS.
10. ARC DIMENSION +360° AND - 0.080".
11. LENGTH TOLERANCE TO BE +2.00" - 0.25"

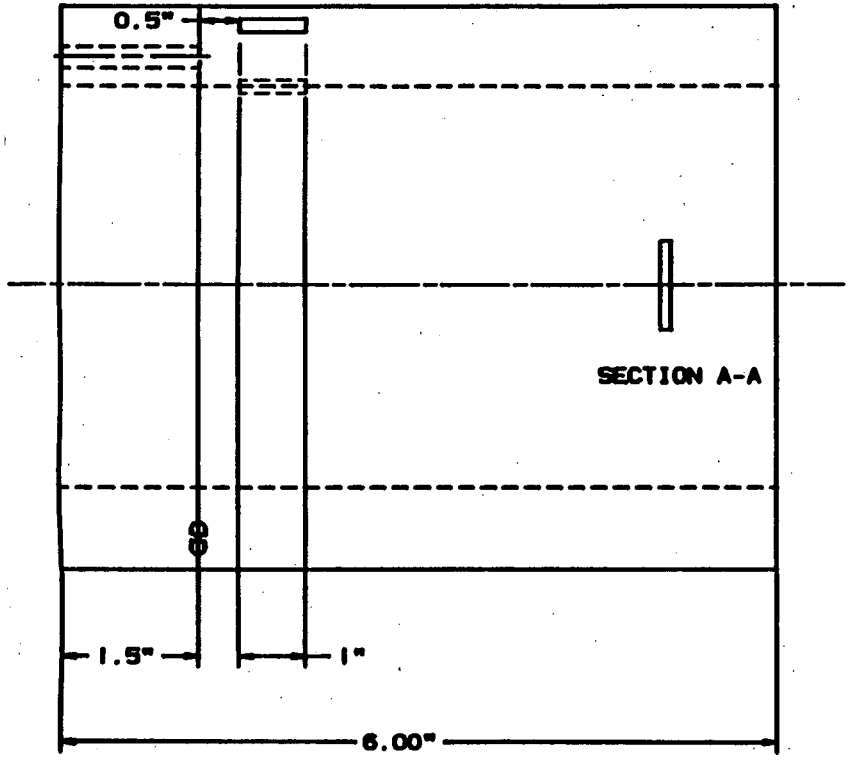

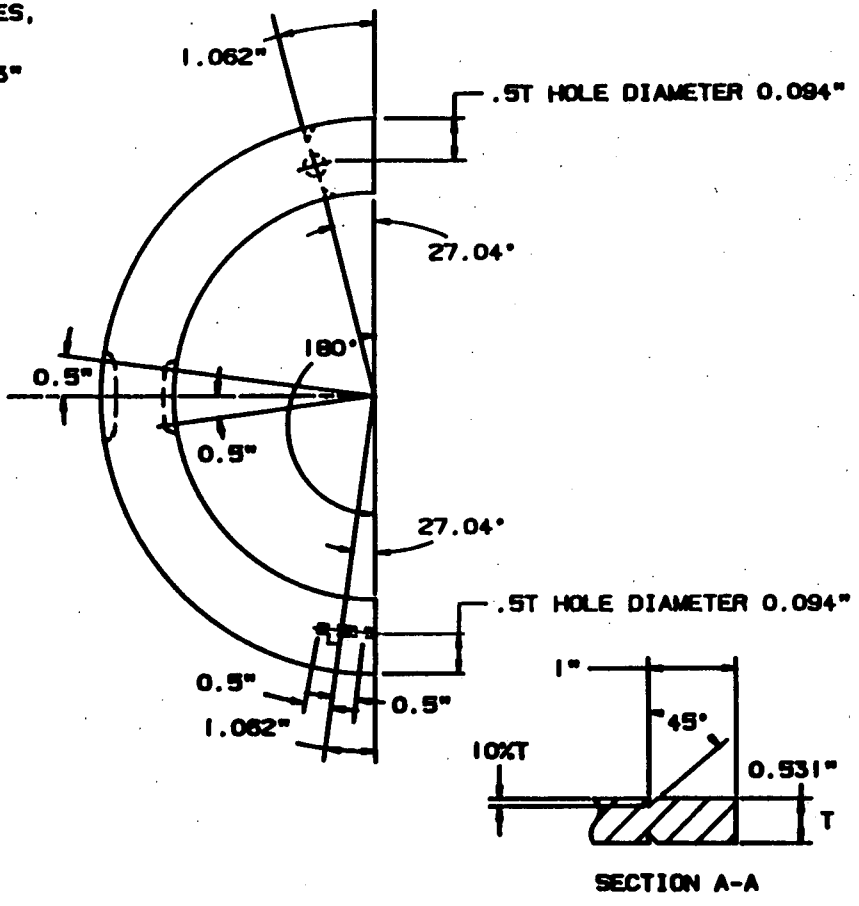

COMPUTER SYSTEM PLANT MODELING

NSSS TECHNICAL APPROVAL Philip C. Bykes	11-20-86	Westinghouse Electric Corporation FLAME ENGINEERING DIVISION - PITTSBURGH, PA
LEVEL III REVIEW David Kunels	11-20-86	TITLE CALIBRATION BLOCK INT-28 4" SCH 160 PRESSURIZER RELIEF PIPING AND CONTROL ROD DRIVE MECHANISMS 4" SCH 160 .531"T-A A376 TP304 STAINLESS STEEL HEAT NO.: 01038
		SIZE C DWG. NO. REV.

REVISIONS

NSD PA1010

Nuclear Service Division
QUALITY RELEASE

QR- 1921 REV. O

PURCHASE ORDER	PART NAME	DRAWING & REV.
410650	UT CALIBRATION BLOCKS	4003 REV 3, 4004 REV 4, 4005 REV 5

PAR NO.	CHG. NOTICE NO.	P.O. ITEM NO.	PROJ./S.O. NO.	QTY. ON ORDER	QTY. RELEASED
0	0	1 THRU 6	INSN-9327	33	12

SUPPLIER	E. SPEC. & REV.	ORDER
TOOLING SPECIALISTS	N/A	COMPLETE ☐ YES ☒ NO

SERIAL OR IDENTIFICATION NOS.

(1) 12" SCH 160 (HT # 28722) / (6) 10" SCH 120 (HT # 6-448)
(1) 12" SCH 40S (HT # 805222-1) / (1) 10" SCH 40S (HT # 1971-12-1-2)
(1) 10" SCH 140 (HT # 061232) / (2) 4" SCH 160 (HT # 01038)

The equipment shown hereon is released by W Quality Assurance. Shipment may be made subject to authorization by W Purchasing. In the Audit Checklist below, an A indicates acceptability, a C indicates a contingency and a W indicates that W QA has waived the auditing or witnessing of the attribute. All non-applicable items are lined out.

AUDIT CHECKLIST

- [x] Material Certifications — SUPPLIED BY WNSD
- [ ] ~~Heat Treat Records~~
- [ ] ~~RT Film and Records~~
- [ ] ~~PT/MT Records~~
- [x] Visual
- [x] Dimensional
- [ ] ~~UT Records~~
- [ ] ~~Personnel Qualification: Welding, NDT~~
- [ ] ~~[illegible]~~
- [ ] ~~[illegible]~~
- [ ] ~~Non-Operating Electrical Tests~~
- [ ] ~~Operating Electrical Test~~
- [ ] ~~Pressure Test~~
- [ ] ~~Seat Tightness Test~~
- [ ] ~~Performance Test~~
- [x] Cleanliness
- [x] Packaging
- [ ] ~~Code Form~~
- [ ] ~~Painting~~
- [x] CERT. OF CONF.

DEVIATION NOTICES AND REMARKS (ALL DEVIATIONS HAVE BEEN APPROVED BY THE RESPONSIBLE WESTINGHOUSE ENGINEER UNLESS A SPECIFIC EXCEPTION IS STATED.)

THE SUPPLIER CERTIFIES that for the equipment and material released, all contractual requirements have been met. Approved deviations, if any, are listed above.

SUPPLIER SIGNATURE: Jimmy D. Sheem DATE: 7/29/80
TITLE:

The equipment shown hereon is released by W Quality Assurance. Shipment may be made subject to authorization by W Purchasing.

The equipment supplier has certified that the equipment above meets all requirements of the purchase order, drawings and specifications. Westinghouse has reviewed evidence supporting this release and except as specified above has detected no deviations from such requirements. This release does not waive any rights Westinghouse may have under the purchase order including Westinghouse's right to reject the equipment upon discovery of any such deviations after arrival at destination.

K.R. Moran 5-8-80
Westinghouse Quality Assurance Representative

REQUISITIONER

Tooling Specialists, Inc.
Certification Letter of Compliance

To: _____

Date: _____

Tooling Specialists, Inc. certifies that all purchase order requirements have been met for the following equipment and material. Any deviations from the order requirements have had Westinghouse NSD approval prior to shipment. Deviation Notice (D/N) numbers applicable are NA (N/A if not applicable).

Westinghouse Purchase Order Number 544 MKK 410650
P.O. Change Notice number(s) 00
Procurement Advisory Release (PAR) number(s) 00

P.O. Item #	Dwg. or Sketch and Rev. #	Base Mat'l & Heat #	Weld Joining Mat'l & Heat #	Cladding Mat'l and Heat #
004	6pc WC03 Rev 3	6-448		
005	1pc WC05 Rev 5	1971-12-12		
006	2pc WC04 Rev 4	01038		

weld joining procedure used NA (include revision #)

cladding procedure used NA (include revision #)

heat treating procedure used NA (include revision #)

One copy each of the following documents as required by the purchase order are attached to this letter. All (including letter) are included with this shipment.

- ✓ Westinghouse Quality Release
- NA Base material mill test report(s)
- NA Weld operator certification
- NA Heat treat chart(s)
- ✓ Inspection Report
- NA Weld joining material mill test report
- NA Cladding material mill test report
- NA Other _____

One additional copy each of this letter and the above documents are hereby forwarded to the Westinghouse Buyer.

All records supporting this certification letter are available at Tooling Specialists.

James D Shearer
(signature)

Tooling Specialists, Inc.

INSPECTION REPORT

Page 1 of 1

TOOLING SPECIALISTS, INC.
Latrobe, Pa. 15650
Phone: (412) 539-2534

Dwg. # W-DS.10 Rev. 9
W204 Rev. 4
P. O. # Item # 006
544-MXK-410650-RN

~~Revision~~ ~~Item~~

Work Order # 21729

CUSTOMER: WNES.

PART DESCRIPTION: 2 Stainless Steel 4" SCH 160 Calibration Blocks (HT No. 01038)

IF OUT OF TOLERANCE, PLACE X IN BOX TO RIGHT OF DIMENSION.

DRAWING DIMENSIONS	Part No. A	X	Part No. B	X	Part No.	X	Part No.	X	Part No.	X	Part No.	X
Nom. Wall "T" .531"	.519		.520									
Hole Dia 3/32"	(1) Hole .093 (2) Hole .098		.092									
(2) 1/2" "T" Holes	.260		.260									
6 +2 -.25" Length	6.23"		6.23"									
A° - 180°	180°		180°									
C° - 27.04°	27.04°		27.04°									
C" - 1.062"	1.062"		1.062"									
E° - 12.73°	12.73°		12.73°									
E" - .5"	.5"		.5"									
F° - 17.33°	17.33°		17.33°									
F" - .5"	.5"		.5"									
(2) 1/2" "T" Hole Depths	.5"		.5"									
1/2" To Hole	1.5"		1.5"									
1 1/2" Depth of Hole	1.5"		1.5"									
1/2" To Notches	.5"		.5"									
1" Typ Notches	1"		1"									
45° Notches	45°		45°									
1" To Notches	1"		1"									
D - 10% "T" Depth of Notches	Radius .047-.049		Radius .047-.049									

INSPECTOR: Wm. H. Jones 5-5-80

RECEIVING INSPECTOR:

W.D.S. 10 Rev. 8 04/26/79

NOM. PIPE SIZE"	SCHED ULE	NOM. WALL 'T'"	O.D."	HOLE DIAM ETER"	HOLES 1/4T	HOLES 1/2T	HOLES 3/4T	NOTCHES CIRC. O.D.	NOTCHES CIRC. I.D.	NOTCHES AXIAL O.D.	NOTCHES AXIAL I.D.	NOTCHES AXIAL Length"	NOM. ARC A°	B°	B" (O.D.)	C°	C" (O.D.)	E°	E"& F"	F°
4	160	.531	4.5	3/32	-	2	-	X	X	X	X	6	180	-	-	27.04	1.062	12.73	.5	17.33

NOTE: Original dimensional requirements supplied to manufacturer.

General Data

1. E and F Dimension - minimum at bottom of notches (.500").
2. D Dimension - Typical all notches (10% of measured thickness) +.500" -.010".
3. A Dimension + to 360° and -.080" of arc.
4. Length +2" -.25".
5. Holes optional for T less than .8".
6. Flat blocks .8"T or less may contain 1/2T hole only.
7. Final acceptable dimensions to be based on intent.
8. Hole location to be based on actual "T".
9. Flat side of notches to be perpendicular notched surfaces, within 2°.
10. Side drilled holes to be within ± 1/32" tolerance.

Intent

1. C Dimension to be approximately 3/4" from edge of arc segment.
2. E and F dimension applicable to both sides of centerline so as to provide 1" long (at bottom) notches.
3. B Dimension to locate axial notches so as not to impose on end of hole at C location or on end of notches at centerline.
4. Circumferential reflectors to be positioned to allow 2T (Full Vee) calibration at 45° beam angle (not applicable for 1 1/2" Sch 80, 1 1/2" Sch 160, 2" Sch 80, 2" Sch 160, 3" Sch 40 & 3" Sch 80).
5. Circumferential holes and notches to be plus or minus .1" from ends.

ALLEGHENY LUDLUM STEEL CORPORATION

DIVISION OF ALLEGHENY LUDLUM INDUSTRIES, INC.

Special Steels for Industry

PLEASE REMIT TO: P.O. BOX 360764M, PITTSBURGH, PENNSYLVANIA 15230

AL 1381 B-4 470

MESSAGE DATE	INQUIRY NUMBER	INQUIRY DATE	SHIPMENT REQ'D.	NOT BEFORE	NO. ITEMS	ORDER ENTRY DATE	MILL ORDER NUMBER
			AUG 10 75		0	12 5 74	0 0-0-97286

DO RATE	PRO RITY	GOV'T. CONTRACT NO.	CUST. ORDER NO. & DATE	CUST. CODE	ACCEPTING MILL
			40-14400 11 21 74	0 903413	WATERVLIET N Y

TYPE OF O S	DESTINATION	INDUSTRY AISI	SIC	PRODUCT CODE	MAT'L.	SLS'M.	DIST.
0	289 037 1478	360	5021	6220013500000021	1121	221	14

O S	PRIORITY	DEST.	IND.	CUST. CODE	PRODUCT	MAT'L.	SLS'M.	DIST.	ACCEPTING MILL
					136 X C9				

TN 14-8408
8-7-74

SOLD TO:
WIRE SALES
PROSPECT PLAINS ROAD
CRANBURY N J 08512

SHIP TO:
WIRE SALES
3 ROLLAND DRIVE
MONROE TOWNSHIP N J
OFF EXIT 8A N J TURNPIKE

CERTIFICATE OF TEST

SOLD TO	A	SN	INV	PL	CH	PY	CL	A	SN	INV	PL	CH	PY	CL	SHIP TO
															SEE REMARKS

ALLEGHENY STAINLESS STEEL TYPE 304 COLD DRAWN ANNEALED AND PICKLED SEAMLESS PIPE TO ASTM A-312 ASTM A-376-72 ASME SA-312 ASME SA-376 AND MIL-P-

INVOICE NUMBER & DATE	DATE SHIPPED
C-19528	10-24-75

FREIGHT CHARGES	VIA	CAR INITIALS & NO.	GROSS	TARE	NET
			2576#		2576#

ITEM	WEIGHT SHIPPED	QUANTITY SHIPPED	SHAPE	WIDTH-DIA-O.D. INCHES	GA-THICK-WALL INCHES	LENGTH OR PART NO.	PRICE	AMOUNT	C/P
1	2576#	1 BDL. 13 PCS. 11501"	WRAPPED	4" SCH 160 4.500	.531	7/14 FT. RL			P
		LOT -		C1-002					
		HEAT -		C1038					
					BAL. DUE - 10711"				
						10/30			

0-0-97286-1	NET WEIGHT OF INVOICE	STATE TAX	DISCOUNT ON THIS AMOUNT IF PAID IN ACCORDANCE WITH ABOVE TERMS	TOTAL AMOUNT OF INVOICE
	2576#			

SHIPMENT C-COMPLETE P-PARTIAL

CERTIFIED CHEMICAL ANALYSIS AND PHYSICAL PROPERTIES ON REVERSE SIDE.

CHEMICAL ANALYSIS OF HEATS

FOR SHIPMENTS SHOWN ON REVERSE SIDE

HEAT NO.	
SYMBOL	ANALYSIS

01038		01038	
C	.070	C	.072
Mn	1.68	Mn	1.69
P	.027	P	.029
S	.024	S	.024
Si	.44	Si	.41
Cr	18.35	Cr	18.37
Ni	8.11	Ni	8.13
Mo	.33	Mo	.33
Cu	.27	Cu	.26
N2	.077	N2	.085
Co	.21	Co	.20
		(CHECK)	

INTERGRANULAR CORROSION TEST: OK
FLATTENING TEST: OK
HYDROSTATIC TEST: OK
STEEL MELTER - ALLEGHENY LUDLUM - WATERVLIET, NY

PHYSICAL PROPERTIES

ITEM	HEAT NO.	YIELD	TENSILE STRENGTH	ELONG.	R. A. %	
01-002	01038	39,875 40,000	84,650 85,000	53.0 51.0		HARDNESS: RB 89/90
CUSTOMER ORDER # 4C-44400 TYPE 304 ASTM A-312 ASME SA-312 ASME SA-376 ASTM A-376-72 4.500 X .531 MIL-P-1144B						

SUBSCRIBED AND SWORN TO BEFORE ME

THIS DATE _____

_____

ANALYSES - RESULTS AS ABOVE CERTIFIED

ALLEGHENY LUDLUM STEEL CORPORATION
DIVISION OF ALLEGHENY LUDLUM INDUSTRIES, INC.

T. D. MOORE 10/24/75

NEW YORK POWER AUTHORITY
INDIAN POINT NUCLEAR POWER PLANT
UNIT NO. 3
CALIBRATION BLOCKS

INDIAN POINT UNIT NO. 3 DESIGNATION	:	INT-26
COMPONENT/SYSTEM	:	4" - .687"T PRESSURIZER SPRAY SAFE END
SIZE/SCHEDULE	:	4" - .687"T
MATERIAL	:	A312 TP304 STAINLESS STEEL
HEAT OR IDENTITY NUMBER	:	05369

ASME SECTION V AND XI 1983 EDITION THROUGH SUMMER 1983 ADDENDA REQUIREMENTS:

1. Section V : T-110 and T-548
2. Section XI : Article III-1100, Supplement 7 and IMA-2250
3. Material : A376 TP316 Stainless Steel
4. Size/Schedule: 4" - .687"T

WESTINGHOUSE ELECTRIC CORPORATION - NSID - INSPECTION SERVICE DESIGN:

Calibration block was designed to meet intent of ASME Boiler and Pressure Vessel Code Section XI 1974 Edition through Summer 1975 Addenda.

RECOMMENDATION:

Calibration block design follows the quidelines of Section V and Section XI - 1983 Edition through Summer 1983 Addenda for Austenitic Piping. Modifications of this design to meet the requirements of Section V and Section XI - 1983 Edition through Summer 1983 Addenda for "ferritic piping and design T-547.1" would be to increase arc length 270° and as required by Table III-3430-1 notch depth to 0.104T - 0.009T squared with tolerance of +10-20%. P-Number Groupings for Materials A312 TP304 Stainless Steel and A376 TP316 Stainless Steel are equivalent.

NOTES:

1. WHEN MEASURED FROM EITHER SIDE OF CENTERLINE MINIMUM LENGTH AT BOTTOM OF AXIAL NOTCHES TO BE 0.5" AS SHOWN IN SIDE VIEW.
2. NOTCH DEPTH 10% OF MEASURED THICKNESS +0.005" - 0.010".
3. PREP ALLOWED IN AREA OF SIDE DRILLED HOLE SHALL NOT INFRINGE ON HOLE SIZE REQUIREMENTS.
4. CIRCUMFERENTIAL HOLES AND NOTCHES TO BE PLUS OR MINUS 0.1" FROM ENDS.
5. LOCATE AXIAL NOTCHES SO AS NOT TO IMPOSE ON END OF HOLES OR ON END OF NOTCHES AT CENTERLINE.
6. FLAT SIDE OF NOTCHES TO BE PERPENDICULAR NOTCHED SURFACES, WITHIN 2°.
7. HOLE LOCATION TO BE BASED ON ACTUAL "T".
8. SIDE DRILLED HOLE DIAMETER TOLERANCE TO BE WITHIN ± 0.03"
9. DRILL HOLES PERPENDICULAR TO RADIUS.
10. ARC DIMENSION +360° AND - 0.080".
11. LENGTH TOLERANCE TO BE +2.00" - 0.25"

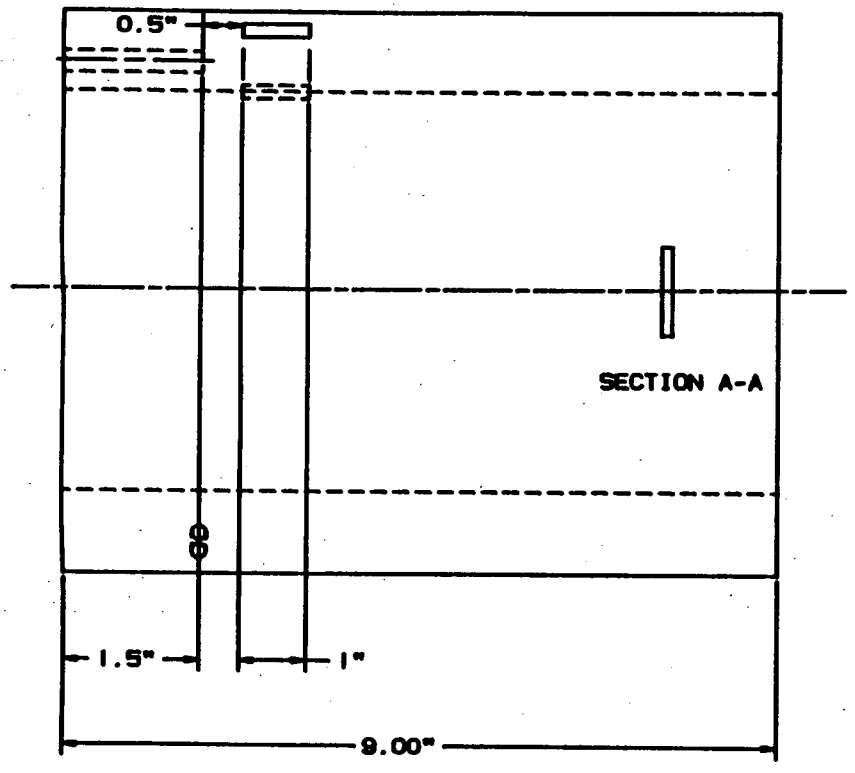

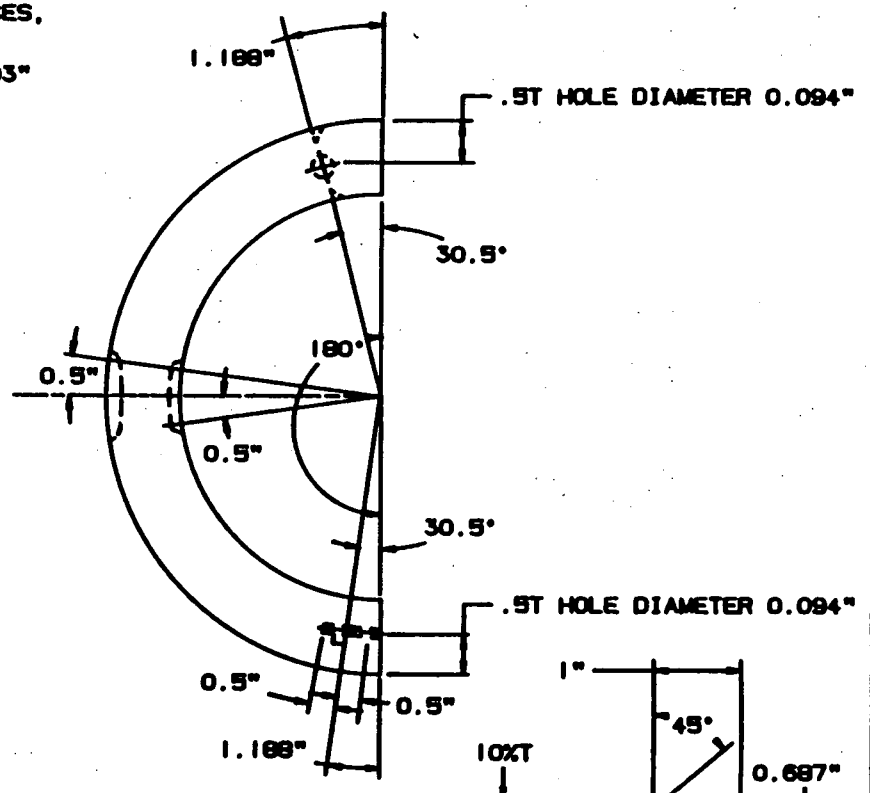

COMPUTER SYSTEM PLANT MODELING

NSSS TECHNICAL APPROVAL: Philip C. Bukas	11-20-86	Westinghouse Electric Corporation, PLANT ENGINEERING DIVISION - PITTSBURGH, PA
LEVEL III REVIEW: David Kenik	11-20-86	TITLE: CALIBRATION BLOCK INT-28 4"-.687"T PRESSURIZER SPRAY SAFE-END 4"-.687"T-B A312 TP304 STAINLESS STEEL HEAT NO.: 05369
		C — DR. NO. — REV.

REVISION — BY — DATE

NSD PA1010

Nuclear Service Division

QUALITY RELEASE

QR- 1719 REV. O

PURCHASE ORDER	PART NAME	DRAWING & REV.
46203	UT Calibration Blocks	6003 Rev 1, 6004 Rev 4

PAR NO.	CHG. NOTICE NO.	P.O. ITEM NO.	PROJ./S.O. NO.	QTY. ON ORDER	QTY. RELEASED
	1	14 & 6	JPN-9227	42	41

SUPPLIER	E. SPEC. & REV.	ORDER
T Ray Specialts	N/A	COMPLETE ☑ YES ☐ NO

SERIAL OR IDENTIFICATION NOS.

UT 114609 (A 4 & H), 152177 (A 4 & C), 013396 (A 4 & H), 072458 (A 4 & H), 103914 (B 4 & H), 05369 (A 4 & D)

The equipment shown hereon is released by W Quality Assurance. Shipment may be made subject to authorization by W Purchasing. In the Audit Checklist below, an A indicates acceptability, a C indicates a contingency and a W indicates that W QA has waived the auditing or witnessing of the attribute. All non-applicable items are lined out.

AUDIT CHECKLIST

☑ Material Certifications	~~Non-Operating Electrical Test~~
~~Heat Treat Records~~	~~Operating Electrical Test~~
~~RT Film and Records~~	~~Pressure Test~~
~~PT/MT Records~~	~~Seat Tightness Test~~
☑ Visual	~~Performance Test~~
☑ Dimensional	☑ Cleanliness
~~UT Records~~	☑ Packaging
~~Personnel Qualification: Welding, NDT~~	~~Code Form~~
	~~Painting~~
	☑ C of C

DEVIATION NOTICES AND REMARKS (ALL DEVIATIONS HAVE BEEN APPROVED BY THE RESPONSIBLE WESTINGHOUSE ENGINEER UNLESS A SPECIFIC EXCEPTION IS STATED.)

THE SUPPLIER CERTIFIES that for the equipment and material released, all contractual requirements have been met. Approved deviations, if any, are listed above.

SUPPLIER SIGNATURE DATE

TITLE

The equipment shown hereon is released by Quality Assurance. Shipment may be made subject to authorization by Purchasing.

The equipment supplier has certified that the equipment above meets all requirements of the purchase order, drawings and specifications. Westinghouse has reviewed evidence supporting this release and except as specified above has detected no deviations from such requirements. This release does not waive any rights Westinghouse may have under the purchase order including Westinghouse's right to reject the equipment upon discovery of any such deviations after arrival at destination.

N E Mc... 7 18 ..

Westinghouse Quality Assurance Representative

SUPPLIER (ATTACH TO SHIPPING PAPERS)

TOOLING
SPECIALISTS
INCORPORATED

MACHINE TOOL BUILDERS — SPECIAL MACHINING — DIES — ENGINEERING SERVICE

P. O. BOX 251, LATROBE, PA. 15650 Phone: (412) 539-2534

LETTER OF COMPLIANCE

July 18, 1979

This is a statement of compliance to the requirements of Westinghouse Purchase Order Number 544-MXK-406203-RN.

All required processes, tests, and inspections have been performed. Inspection data sheets, heat treat charts, weld wire and material certifications are attached as required by the Purchase Order.

A listing of Purchase Order items in this shipment is attached.

Documented evidence of compliance supporting this certification is available at Tooling Specialists, Inc.

Sincerely yours,

Thomas D. Shearer

Thomas D. Shearer
Manager Special Products

TDS/sfz

222

INSPECTION REPORT

Page _____ of _____

TOOLING SPECIALISTS, INC.
Latrobe, Pa. 15650
Phone: (412) 539-2534

Dwg. #
Revision
Item
P. O. #
Work Order # 21-344

CUSTOMER:

PART DESCRIPTION:
4-Sch .687 HT. 05369

IF OUT OF TOLERANCE, PLACE X IN BOX TO RIGHT OF DIMENSION.

DRAWING DIMENSIONS		Part No. A	X	Part No. B	X	Part No. C	X	Part No. D	X	Part No.	X	Part No.	X
Nom. wall thickness		.680		.673		.676		.675					
Cir. Notch	OD	.068		.067		.067		.067					
	I.D.	.068		.067		.067		.067					
Axial Notch	OD	.068		.067		.068		.066					
	ID	.068		.067		.068		.066					
Length		9.00		9.00		8.940		8.940					
A°		180°		180°		180°		180°					
'de dia.		3/32		3/32		3/32		3/32					
1/8T hole, End		.343		.338		.343		.334					
1/8T hole, side		.334		.342		.333		.345					
	C	30°30'		30°30'		30°30'		30°30'					
	E	12°42'		12°42'		12°42'		12°42'					
	F	19°24'		19°24'		19°24'		19°24'					

INSPECTOR: Thomas O'Shaw

RECEIVING INSPECTOR:

NOM. PIPE SIZE"	SCHED ULE	NOM. WALL 'T'"	O.D."	HOLE DIAM ETER"	HOLES 1/4T	HOLES 1/2T	HOLES 3/4T	NOTCHES CIRC. O.D.	NOTCHES CIRC. I.D.	NOTCHES AXIAL O.D.	NOTCHES AXIAL I.D.	NOTCHES AXIAL Length"	NOM. ARC A°	B°	B" (O.D.)	C°	C" (O.D.)	E°	E"& F"	F°
4	-	.687	4.5	3/32	-	2	-	X	X	X	X	9	180	-	-	30.5	1.188	12.7	.5	19.4

NOTE: Original dimensional requirements supplied to manufacturer.

General Data

1. E and F Dimension - minimum at bottom of notches (.500").
2. D Dimension - Typical all notches (10% of measured thickness) +.500" -.010".
3. A Dimension + to 360° and -.080" of arc.
4. Length +2" -.25".
5. Holes optional for T less than .8".
6. Flat blocks .8"T or less may contain 1/2T hole only.
7. Final acceptable dimensions to be based on intent.
8. Hole location to be based on actual "T".
9. Flat side of notches to be perpendicular notched surfaces, within 2°.
10. Side drilled holes to be within ± 1/32" tolerance.

Intent

1. C Dimension to be approximately 3/4" from edge of arc segment.
2. E and F dimension applicable to both sides of centerline so as to provide 1" long (at bottom) notches.
3. B Dimension to locate axial notches so as not to impose on end of hole at C location or on end of notches at centerline.
4. Circumferential reflectors to be positioned to allow 2T (Full Vee) calibration at 45° beam angle (not applicable for 1 1/2" Sch 80, 1 1/2" Sch 160, 2" Sch 80, 2" Sch 160, 3" Sch 40 & 3" Sch 80).
5. Circumferential holes and notches to be plus or minus .1" from ends.

AL TECH

AL Tech Specialty Steel Corporation

Willowbrook Avenue, Dunkirk, N.Y. 14048

ORIGINAL

CERTIFICA
OF TEST

PURCHASE ORDER NO. AND DATE		NOT BEFORE	INQUIRY NO. AND DATE		ACCEPTING MILL	MILL ORDER NO.	DATE SHIPPED	INVOICE
LJ 8-83453	10/31/78	04019			WATERVLIET	0-0-98721	3/2/79	

TUBE SALES
PROSPECT PLAINS ROAD

CRANBURY NJ 08512

SHIP TO

TUBE SALES
ENGELHARD DRIVE

MONROE TOWNSHIP NJ
OFF EXIT 8A N J TURNPIKE

RODUCT SPECIFICATIONS

AL TECH STAINLESS STEEL TYPE 304H .04-.08 CARBON
EXTRUDED SEAMLESS PIPE TO ASTM A-312-77 ASME SA-312
CORROSION TESTED TO MIL-P-1144D

TOOLING SPECIALIST
0616
Item 6

EM	DESCRIPTION	QUANTITY	POUNDS	C/P	TEST PCS.	COPIES SOLD TO	C	P	COPIES SHIP TO	C
1	T 4.5000 .6740 6/13						2	2		1

CHEMICAL ANALYSIS

STANDARD ELEMENTS & PERCENTAGES

ADDITIONAL ELEMENTS

HEAT NO.	C	MN	P	S	SI	CR	NI	AL	MO	CU	Co
05369	.052	1.75	.028	.017	.36	18.65	8.27	-	.37	.17	.17 (LADLE)
	.051	1.74	.026	.025	.33	18.55	8.24	-	.36	.16	.16 (CHECK)

STEEL MELTER - AL TECH, WATERVLIET, NY

PHYSICAL PROPERTIES

HEAT NO.	TENSILE PSI	YIELD PSI	ELONG %	BRINELL / ROCKWELL	TEST NO.
05369	93,370	45,780	58.0	Rb88/89	01-002

TUBESALES.

INTERGRANULAR CORROSION TEST: OK
FLATTENING TEST: OK
HYDROSTATIC TEST: OK

APPROVED 3/7

THESE TEST REPORTS APPLY TO

CAPITOL PIPE & STEEL

P.O. NO. D10461-65

T/S NO. 9-19457

FOOTAGE 1'-6" DATE 05/96

W. B. ACKERMAN, TEST ENGINEER 3/2/79

NEW YORK POWER AUTHORITY
INDIAN POINT NUCLEAR POWER PLANT
UNIT NO. 3
CALIBRATION BLOCKS

INDIAN POINT UNIT NO. 3 DESIGNATION	:	INT-27
COMPONENT/SYSTEM	:	31" - 1.5"T MAINSTEAM NOZZLE
SIZE/SCHEDULE	:	31" - 1.5"T
MATERIAL	:	A515 GRADE 70 CARBON STEEL
HEAT OR IDENTITY NUMBER	:	3G8217

ASME SECTION V AND XI 1983 EDITION THROUGH SUMMER 1983 ADDENDA REQUIREMENTS:

1. Section V : T-547
2. Section XI : III-3400
3. Material : A234 WPC Carbon Steel
4. Size/Schedule: 31" - 1.5"T

WESTINGHOUSE ELECTRIC CORPORATION - NSID - INSPECTION SERVICE DESIGN:

Calibration block was designed to meet intent of ASME Boiler and Pressure Vessel Code Section XI 1974 Edition through Summer 1975 Addenda.

RECOMMENDATION:

Calibration block follows the design and requirements for Section V and Section XI of the 1983 Edition through Summer 1983 Addenda except for axial notches located only 1" from block edge instead of 1.5" minimum as required by Figure T-547.1 and notch depth to 0.104"T - 0.009T squared with tolerance of +10%-20% as required by Table III-3430-1. P-Number Groupings for Materials A515 Grade 70 Carbon Steel and A234 WPC Carbon Steel are equivalent.

NOTES:

1. WHEN MEASURED FROM EITHER SIDE OF CENTERLINE MINIMUM LENGTH AT BOTTOM OF AXIAL NOTCHES TO BE 0.5" AS SHOWN IN SIDE VIEW.
2. NOTCH DEPTH 10% OF MEASURED THICKNESS +0.005"-0.010".
3. PREP ALLOWED IN AREA OF SIDE DRILLED HOLE SHALL NOT INFRINGE ON HOLE SIZE REQUIREMENTS.
4. CIRCUMFERENTIAL HOLES AND NOTCHES TO BE PLUS OR MINUS 0.1" FROM ENDS.
5. LOCATE AXIAL NOTCHES SO AS NOT TO IMPOSE ON END OF HOLES OR ON END OF NOTCHES AT CENTERLINE.
6. FLAT SIDE OF NOTCHES TO BE PERPENDICULAR NOTCHED SURFACES, WITHIN 2°.
7. HOLE LOCATION TO BE BASED ON ACTUAL "T".
8. SIDE DRILLED HOLE DIAMETER TOLERANCE TO BE WITHIN ±0.03"
9. DRILL HOLES PERPENDICULAR TO RADIUS.
10. ARC DIMENSION +360° AND -0.080".
11. LENGTH TOLERANCE TO BE +2.00"-0.25"

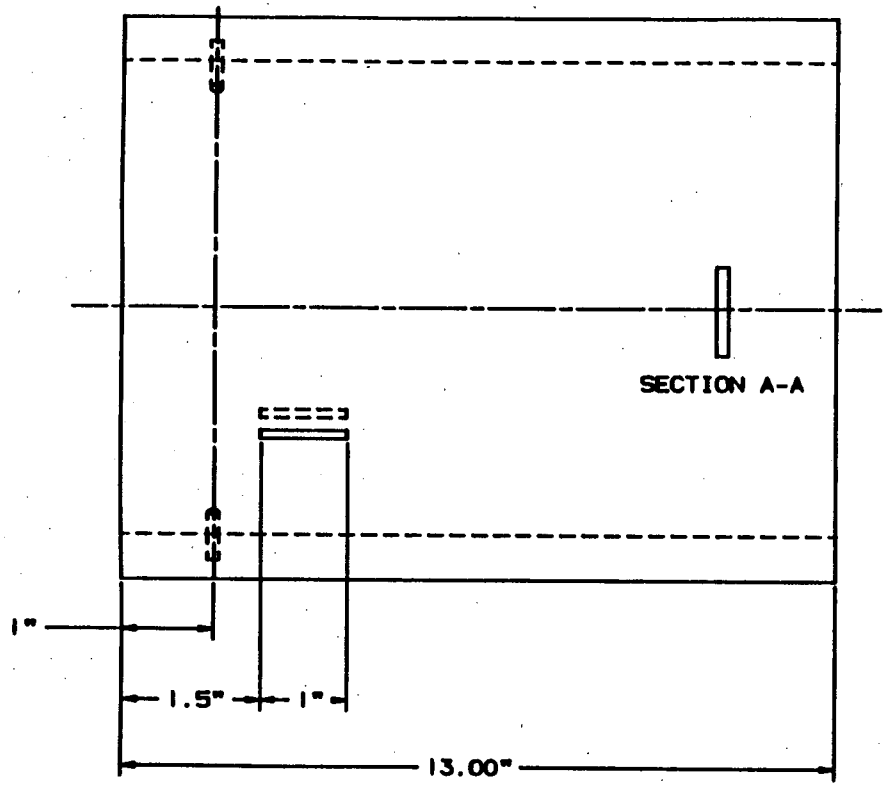

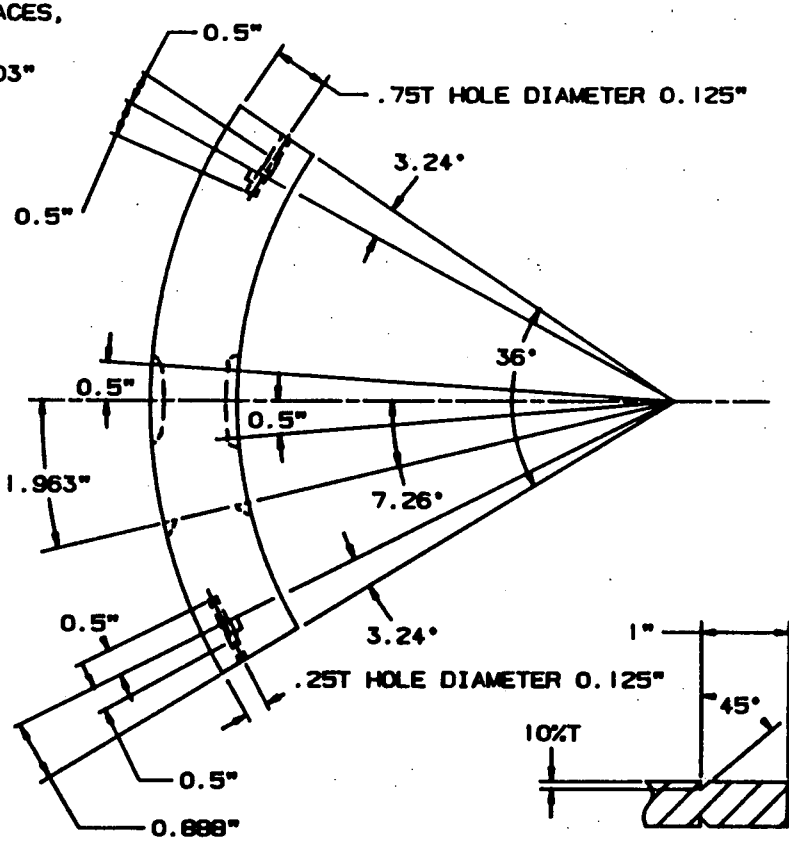

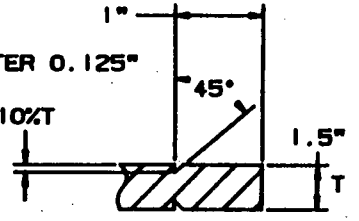

SECTION A-A

COMPUTER SYSTEM PLANT MODELING

NSSS TECHNICAL APPROVAL Phillip C. Rubert	11-20-86	Westinghouse Electric Corporation PLANT ENGINEERING DIVISION - PITTSBURGH, PA
LEVEL III REVIEW David Kunz	11-20-86	TITLE CALIBRATION BLOCK INT-27 31"-1.5"T MAINSTEAM NOZZLE 31"-1.5"T-B A515 GRADE 70 CARBON STEEL HEAT NO.: 308217
ENG		
ENG		
MER		SIZE C SH. NO. REV.

REVISION

B. O. IT.

NSD PA1011

Nuclear Service Division

SUPPLIER QUALITY RELEASE

① SUPPLIER Tooling Specialists Inc QR- S 1086

PURCHASE ORDER ①	PART NAME ①	DRAWING & REV. ②
544-CXG410688-RN	Calibration Block - Pipe	W003 Rev 3

PAR NO. ③	CHG. NOTICE NO. ③	P.O. ITEM NO. ③	QTY. ON ORDER ④	QTY. RELEASED ⑤
—	000	IT 003A	4	1

PROJECT AND SHOP ORDER ①	E. SPEC. NO. ①	ORDER ⑤
	NA	COMPLETE ☐ YES ☒ NO

SERIAL OR IDENTIFICATION NOS. ⑥

IT 003A 3i Sch 1.5T × 13 L HT 368217 INT 27

The equipment shown hereon is released by our QC Department. Where indicated by a check mark (✓), records and data have been reviewed and approved. Records of objective edivence are on file and subject to Westinghouse Review. Non applicable items are lined out.

AUDIT CHECKLIST ⑦

☑ Material Certifications	~~Non Operating Electrical Tests~~
~~Heat Treat Records~~	~~Operating Electrical Test~~
~~RT Film and Records~~	~~Pressure Test~~
~~PT/MT Records~~	~~Seat Tightness Test~~
☑ Visual	~~Performance Test~~
☑ Dimensional	☑ Cleanliness
~~UT Records~~	☑ Packaging
~~Personnel Qualification Welding NDT~~	~~Code Form~~
	~~Painting~~
	☑ Letter of Compliance

DEVIATION NOTICES AND REMARKS (ALL DEVIATIONS HAVE BEEN APPROVED BY THE RESPONSIBLE WESTINGHOUSE ENGINEER UNLESS A SPECIFIC EXCEPTION IS STATED.) ⑧

WE CERTIFY THAT FOR THE EQUIPMENT AND MATERIAL RELEASED, ALL CONTRACTUAL REQUIREMENTS HAVE BEEN MET. APPROVED DEVIATIONS, IF ANY, ARE LISTED ABOVE.

⑨ SUPPLIER SIGNATURE Thomas D Shearer TITLE Mgr Special Products DATE 2/25/81

WESTINGHOUSE QUALITY ASSURANCE

Tooling Specialists, Inc.
Certification Letter of Compliance

To: (W) IVES
PO Box 355
Pitsburgh, Pa. 15230

Date: 2/25/81

Tooling Specialists, Inc. certifies that all purchase order requirements have been met for the following equipment and material. Any deviations from the order requirements have had Westinghouse NSD approval prior to shipment. Deviation Notice (D/N) numbers applicable are NA (N/A if not applicable).

Westinghouse Purchase Order Number 544-CXG-410688-RN
P.O. Change Notice number(s) 00
Procurement Advisory Release (PAR) number(s) 00

P.O. Item #	Dwg. or Sketch and Rev. #	Base Mat'l & Heat #	Weld Joining Mat'l & Heat #	Cladding Mat'l and Heat #
003A 1pc	W0003 Rev 3	HT 3G 8217		

weld joining procedure used _____ (include revision #)

cladding procedure used _____ (include revision #)

heat treating procedure used _____ (include revision #)

One copy each of the following documents as required by the purchase order are attached to this letter. All (including letter) are included with this shipment.

- ✓ Westinghouse Quality Release
- ✓ Base material mill test report(s)
- ___ Weld operator certification
- ___ Heat treat chart(s)
- ✓ Inspection Report
- ___ Weld joining material mill test report
- ___ Cladding material mill test report
- Other INT-27

One additional copy each of this letter and the above documents are hereby forwarded to the Westinghouse Buyer.

All records supporting this certification letter are available at Tooling Specialists.

Thomas O Shearer
(signature)

Tooling Specialists, Inc.

INSPECTION REPORT

Page 1 of 1

TOOLING SPECIALISTS, INC.
Latrobe, Pa. 15650
Phone: (412) 539-2534

Dwg. # W003.10 Rev. 11
W003 Rev. 3
P.O. # Item # 003A 544-CX6-410688-RN
Revision
Item
Work Order # 22547

CUSTOMER: WNES

PART DESCRIPTION: 1 Calibration Block 3" Nom. Dia. 1.5" T, 13" Long H.T. # 36 8217

IF OUT OF TOLERANCE, PLACE X IN BOX TO RIGHT OF DIMENSION.

DRAWING DIMENSIONS	Part No. INT-27	X	Part No.	X	Part No.	X	Part No.	X	Part No.	X	Part No.	X
Nom. Wall "T" - 1.5"	1.525											
Hole Dia. 1/8" (2)	1/8"											
(1) 1/4 T To Hole	.37"											
(1) 3/4 "T" To Hole	1.14"											
L - 13" +.2" -.250"	14.40"											
A° - 36°	36°											
B° - 7.26°	7.26°											
B" - 1.963"	1.963"											
C° - 3.24°	3.24°											
C" - .888"	.888"											
E° - 1.85°	1.85°											
E" - .5"	.5"											
F° - 2.07°	2.07°											
F" - .5"	.5"											
(4) 1/2" Dia.	.50"											
(2) 1" Dia. To Holes	1.00"											
1" Typ. Length of Notches	1.00"											
(2) 1" Dia. To Notches	1.00"											
(4) 45° Notches	45°											
1 1/2" Dia. To Notches	1.50"											
(4) "D" 10% "T"	Readers .150-.152											

INSPECTOR: Thomas L. Jones 2-24-81

RECEIVING INSPECTOR:

W.D.S. 10 Rev. 11 07/08/80

NOM. PIPE SIZE"	SCHED ULE	NOM. WALL 'T'"	O.D."	HOLE DIAM ETER"	HOLES 1/4T	HOLES 1/2T	HOLES 3/4T	NOTCHES CIRC. O.D.	NOTCHES CIRC. I.D.	NOTCHES AXIAL O.D.	NOTCHES AXIAL I.D.	NOTCHES Length"	NOM. ARC A°	B°	B" (O.D.)	C°	C" (O.D.)	E°	E"& F"	F°
31	-	1.5	31	1/8	1	-	1	X	X	X	X	13	36	7.26	1.963	3.24	.888	1.85	.5	2.07

NOTE: Original dimensional requirements supplied to manufacturer.

General Data

1. E and F Dimension - minimum at bottom of notches (.500").
2. D Dimension - Typical all notches (10% of measured thickness) +.500" -.010".
3. A Dimension + to 360° and -.080" of arc.
4. Length +2" -.25".
5. Holes optional for T less than .8".
6. Flat blocks .8"T or less may contain 1/2T hole only.
7. Final acceptable dimensions to be based on intent.
8. Hole location to be based on actual "T".
9. Flat side of notches to be perpendicular notched surfaces, within 2°.
10. Side drilled holes to be within ± 1/32" tolerance.

Intent

1. C Dimension to be approximately 3/4" from edge of arc segment.
2. E and F dimension applicable to both sides of centerline so as to provide 1" long (at bottom) notches.
3. B Dimension to locate axial notches so as not to impose on end of hole at C location or on end of notches at centerline.
4. Circumferential reflectors to be positioned to allow 2T (Full Vee) calibration at 45° beam angle (not applicable for 1 1/2" Sch 80, 1 1/2" Sch 160, 2" Sch 80, 2" Sch 160, 3" Sch 40 & 3" Sch 80).
5. Circumferential holes and notches to be plus or minus .1" from ends.

CONTRACT

P.O DATE	PURCHASE ORDER NO
	03/25. J

SHIPPERS NO	MILL ORDER NO	INVOICE NO
78350 4/21/80	H18552	324-10892
VEHICLE IDENTITY		
CS78031		160

TEXAS WORKS
BATTLEGROUND TX. 77520

U S STEEL CORP
UNITED STATES STEEL SUPPLY DIV
P O BOX 2489
HOUSTON TEXAS 77001

SHIP TO
U S STEEL CORP
U S STEEL SUPPLY DIV
TEXAS WAREHOUSE
9500 CLINTON DRIVE
HOUSTON TEX

BEING DULY SWORN ACCORDING TO LAW DEPOSES AND SAYS THAT THE CHEMICAL ANALYSES AND/OR TEST RESULTS SHOWN IN THIS REPORT ARE CORRECT AS CONTAINED IN THE RECORDS OF THE COMPANY.

Randy Hefferlin
S.L. NORWOOD, CH. MET

DATE 04/21/80

CARBON PLATE ASTM A-515-78 & ASME SA-515 SUMMER 1978 ADDENDA GRADE 70 PVQ BEND TEST STRESS RELIEVE TEST PER UCS 56 1/2 HR MIN 400F MAX COOLING TEMP
PLATES
WILL RA/SN ALSO RA/LT SWORN T/R - ANALYSIS - REPORT TEST RESULTS PER PRODUCT SPECN CAPTION

A515 Gr 70

STATE OF TEXAS
COUNTY OF CHAMBERS
SUBSCRIBED AND SWORN TO BEFORE ME THIS 22ND DAY OF APRIL 1980
MY COMMISSION EXPIRES JUNE 1, 1981.

Larry W Williams

MATERIAL DESCRIPTION: THICKNESS OR SECTION	WIDTH, DIA OR FT. WT	LENGTH	QUANTITY	WEIGHT	HEAT NO.	TEST OR PIECE IDENTITY	YIELD PT KSI	TENSILE STR KSI	ELONGATION % IN 8"	ELONGATION % IN 2"	% RED OF AREA	BEND
1-1/2	96	240	2	19602	368217	3 TT	44.5	74.5	28.0			OK
ABOVE TEST SPECIMENS STRESS RELIEVED AT 1150 DEG. F. WTD. 1.8 HRS. AIR COOLED TO ROOM TEMP.												
1-1/2	96	240	2	19602	368217	12 TT	45.6	75.4	32.0			OK
ABOVE TEST SPECIMENS STRESS RELIEVED AT 1150 DEG. F. WTD. 1.8 HRS. AIR COOLED TO ROOM TEMP.												
1-1/2	96	240	1	9801	463223	7 A TT	44.3	74.5	29.0			OK
ABOVE TEST SPECIMENS STRESS RELIEVED AT 1150 DEG. F. WTD. 1.8 HRS. AIR COOLED TO ROOM TEMP.												

YSEUL - .0050 EXT.

HEAT NO	TYPE	C	MN	P	S	SI	CU	NI	CR	MO	SN	AL	N	V	B	TI	CB	CO	
68217	HEAT	27	79	006	016	23													COARSE GRAIN PRACT
63223	HEAT	27	79	007	012	23													COARSE GRAIN PRACT

12

NEW YORK POWER AUTHORITY
INDIAN POINT NUCLEAR POWER PLANT
UNIT NO. 3
CALIBRATION BLOCKS

INDIAN POINT UNIT NO. 3 DESIGNATION	:	INT-28
COMPONENT/SYSTEM	:	3" SCH 160 LETDOWN, RTD RETURN, PRESSURIZER SPRAY AND CHARGING PIPING
SIZE/SCHEDULE	:	3" SCH 160 .438"T
MATERIAL	:	A376 TP316 STAINLESS STEEL
HEAT OR IDENTITY NUMBER	:	N7212

ASME SECTION V AND XI 1983 EDITION THROUGH SUMMER 1983 ADDENDA REQUIREMENTS:

1. Section V : T-110 and T-548
2. Section XI : Article III-1100, Supplement 7 and IMA-2250
3. Material : A376 TP316 Stainless Steel
4. Size/Schedule: 3" SCH 160 .438"T

WESTINGHOUSE ELECTRIC CORPORATION - NSID - INSPECTION SERVICE DESIGN:

Calibration block was designed to meet intent of ASME Boiler and Pressure Vessel Code Section XI 1974 Edition through Summer 1975 Addenda.

RECOMMENDATION:

Calibration block design follows the quidelines of Section V and Section XI - 1983 Edition through Summer 1983 Addenda for Austenitic Piping. Class 1 Piping less than 4 inch nominal pipe size no longer requires Volumetric examination per the requirements of Section XI - 1983 Edition through Summer 1983 Addenda. Modifications of this design to meet the requirements of Section V and Section XI - 1983 Edition through Summer 1983 Addenda for calibration blocks for "ferritic piping and design T-547.1" would be to increase arc length to 270° and length to 8" and as required by Table III-3430-1 notch depth to 0.104T - 0.009T squared with tolerance of +10%-20%.

NOTES:

1. WHEN MEASURED FROM EITHER SIDE OF CENTERLINE MINIMUM LENGTH AT BOTTOM OF AXIAL NOTCHES TO BE 0.5" AS SHOWN IN SIDE VIEW.
2. NOTCH DEPTH 10% OF MEASURED THICKNESS +0.005" - 0.010".
3. PREP ALLOWED IN AREA OF SIDE DRILLED HOLE SHALL NOT INFRINGE ON HOLE SIZE REQUIREMENTS.
4. CIRCUMFERENTIAL HOLES AND NOTCHES TO BE PLUS OR MINUS 0.1" FROM ENDS.
5. LOCATE AXIAL NOTCHES SO AS NOT TO IMPOSE ON END OF HOLES OR ON END OF NOTCHES AT CENTERLINE.
6. FLAT SIDE OF NOTCHES TO BE PERPENDICULAR NOTCHED SURFACES, WITHIN 2°.
7. HOLE LOCATION TO BE BASED ON ACTUAL "T".
8. SIDE DRILLED HOLE DIAMETER TOLERANCE TO BE WITHIN ± 0.03"
9. DRILL HOLES PERPENDICULAR TO RADIUS.
10. ARC DIMENSION +360° AND - 0.080".
11. LENGTH TOLERANCE TO BE +2.00" - 0.25"

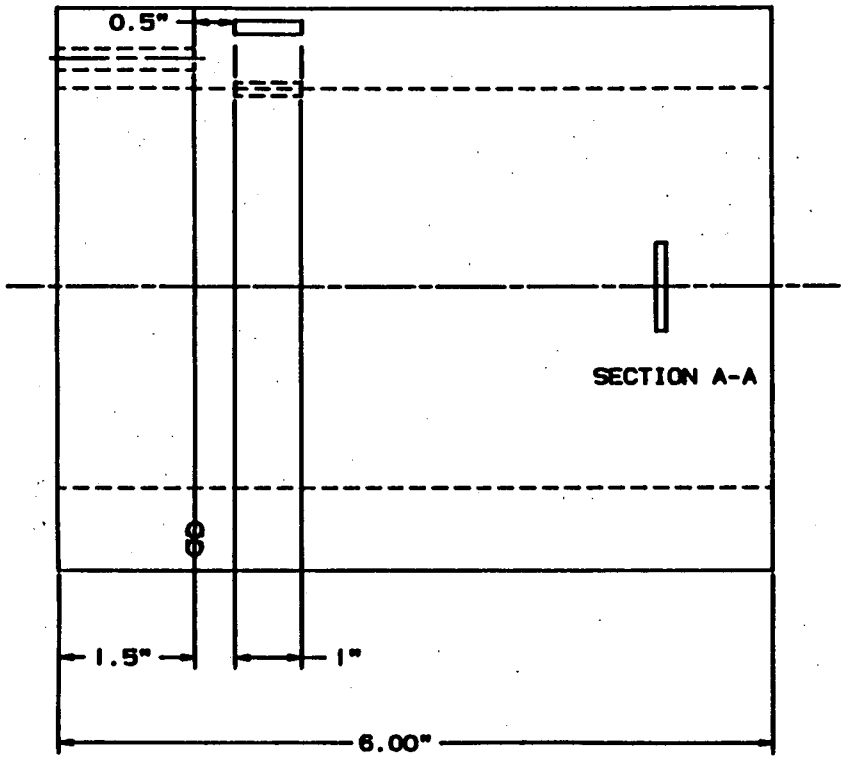

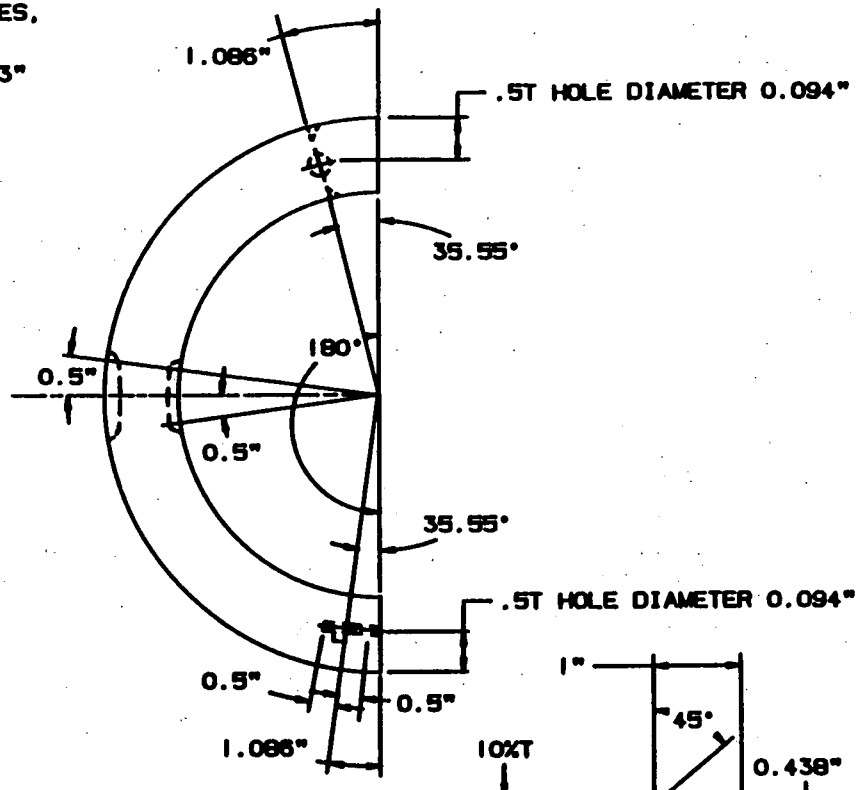

COMPUTER SYSTEM PLANT MODELING

NSSS TECHNICAL APPROVAL: Phillip C. Burkes	11-20-86	Westinghouse Electric Corporation — PLANT ENGINEERING DIVISION - PITTSBURGH, PA
LEVEL III REVIEW: David Trunk	11-20-86	TITLE: CALIBRATION BLOCK INT-28 3" SCH 160 LETDOWN, RTD RETURN, PRESSURIZER RELIEF, PRESSURIZER SPRAY AND CHARGING PIPING 3" SCH 160 .438"T-B A376 TP316 STAINLESS STEEL HEAT NO.: N7212
		C — DR. NO. — REV.

NSD PA1010

P. Bukes

Nuclear Service Division
QUALITY RELEASE

QR- 1824 REV. 0

PURCHASE ORDER	PART NAME	DRAWING & REV.
294103	UT CALIBRATION BLOCKS	W004 REV. 4

PAR NO.	CHG. NOTICE NO.	P.O. ITEM NO.	PROJ./S.O. NO.	QTY. ON ORDER	QTY. RELEASED
0	002	016	IABN-9327	75	10

SUPPLIER	E. SPEC. & REV.	ORDER
TOOLING SPECIALISTS	N/A	COMPLETE ☑ YES ☐ NO

SERIAL OR IDENTIFICATION NOS.

HT # N7212 (A THRU J)

The equipment shown hereon is released by W Quality Assurance. Shipment may be made subject to authorization by W Purchasing. In the Audit Checklist below, an A indicates acceptability, a C indicates a contingency and a W indicates that W QA has waived the auditing or witnessing of the attribute. All non-applicable items are lined out.

AUDIT CHECKLIST

- [A] Material Certifications
- ~~[ ] Heat Treat Records~~
- ~~[ ] RT Film and Records~~
- ~~[ ] PT/MT Records~~
- [A] Visual
- [A] Dimensional
- ~~[ ] UT Records~~
- ~~[ ] Personnel Qualification: Welding, NDT~~
- ~~[ ]~~
- ~~[ ]~~
- ~~[ ] Non-Operating Electrical Tests~~
- ~~[ ] Operating Electrical Test~~
- ~~[ ] Pressure Test~~
- ~~[ ] Seat Tightness Test~~
- ~~[ ] Performance Test~~
- [A] Cleanliness
- ~~[ ] Packaging~~
- ~~[ ] Code Form~~
- ~~[ ] Painting~~
- [A] C. OF C.

DEVIATION NOTICES AND REMARKS (ALL DEVIATIONS HAVE BEEN APPROVED BY THE RESPONSIBLE WESTINGHOUSE ENGINEER UNLESS A SPECIFIC EXCEPTION IS STATED.)

THE SUPPLIER CERTIFIES that for the equipment and material released, all contractual requirements have been met. Approved deviations, if any, are listed above.

SUPPLIER SIGNATURE: Thomas D Shearer DATE

TITLE

The equipment shown hereon is released by Quality Assurance. Shipment may be made subject to authorization by Purchasing.

The equipment supplier has certified that the equipment above meets all requirements of the purchase order, drawings and specifications. Westinghouse has reviewed evidence supporting this release and except as specified above has detected no deviations from such requirements. This release does not waive any rights Westinghouse may have under the purchase order including Westinghouse's right to reject the equipment upon discovery of any such deviations after arrival at destination.

L.R. Moran 1-10-80

Westinghouse Quality Assurance Representative

REQUISITIONER

Tooling Specialists, Inc.
Certification Letter of Compliance

To: (W) NES
P.O. Box 355
Pittsburgh, Pa 15230

Date: 1/7/80

Tooling Specialists, Inc. certifies that all purchase order requirements have been met for the following equipment and material. Any deviations from the order requirements have had Westinghouse NSD approval prior to shipment. Deviation Notice (D/N) numbers applicable are NA (N/A if not applicable).

Westinghouse Purchase Order Number 534-MXK-294103 -RN
P.O. Change Notice number(s) 002
Procurement Advisory Release (PAR) number(s) NA

P.O. Item #	Dwg. or Sketch and Rev. #	Base Mat'l & Heat #	Weld Joining Mat'l & Heat #	Cladding Mat'l and Heat #
016 top	W004 Rev 4	N7212	NA	NA

weld joining procedure used NA
(include revision #)
cladding procedure used NA
(include revision #)
heat treating procedure used NA
(include revision #)

One copy each of the following documents as required by the purchase order are attached to this letter. All (including letter) are included with this shipment.

- ✓ Westinghouse Quality Release
- ✓ Base material mill test report(s)
- NA Weld operator certification
- NA Heat treat chart(s)
- ✓ Inspection Report
- NA Weld joining material mill test report
- NA Cladding material mill test report
- NA Other

One additional copy each of this letter and the above documents are hereby forwarded to the Westinghouse Buyer.

All records supporting this certification letter are available at Tooling Specialists.

Thomas D Shaw
(signature)

Tooling Specialists, Inc.

TOOLING
SPECIALISTS
INCORPORATED

MACHINE TOOL BUILDERS — SPECIAL MACHINING — DIES — ENGINEERING SERVICE

P. O. BOX 251, LATROBE, PA. 15650 Phone: (412) 539-2534

LETTER OF COMPLIANCE

June 29, 1979

This is a statement of compliance to the requirements of Westinghouse Purchase Order Number 544-MXK-294103-RN.

All required processes, tests, and inspections have been performed. Inspection data sheets, heat treat charts, weld wire and material certifications are attached as required by the Purchase Order.

A listing of Purchase Order items in this shipment is attached.

Documented evidence of compliance supporting this certification is available at Tooling Specialists.

Sincerely yours,

Thomas D. Shearer

Thomas D. Shearer
Manager Special Products

TDS:keo

2" Sch 160 Material has not been received yet

237

INSPECTION REPORT

Page 1 of 2

TOOLING SPECIALISTS, INC.
Latrobe, Pa. 15650
Phone: (412) 539-2534

Dwg. # W 004 | Revision 4 | Item
P. O. # 544-MXK-294103-RN | Work Order # 21235

CUSTOMER: W. N.E.S.

PART DESCRIPTION: 10 Pieces 3" SCH. 160 Calibration Standards

IF OUT OF TOLERANCE, PLACE X IN BOX TO RIGHT OF DIMENSION.

DRAWING DIMENSIONS	Part No. A X	Part No. B X	Part No. C X	Part No. D X	Part No. E X	Part No. F X
Nom. Wall "T" - .438"	.442"	.437"	.438"	.441"	.443"	.434"
O.D - 3.5"	3.5"	3.5"	3.5"	3.5"	3.5"	3.5"
Hole Dia 3/32	.093"	.093"	.093"	.093"	.093"	.093"
Holes 1/2 "T" -	.221"	.219"	.219"	.220"	.221"	.217"
Length - 6" I.5"	6.018"	6.018"	6.018"	6.018"	6.018"	6.018"
A° - 180°	180°	180°	180°	180°	180°	180°
C° - 35.55°	35.55°	35.55°	35.55°	35.55°	35.55°	35.55°
C" - 1.086"	1.086"	1.086"	1.086"	1.086"	1.086"	1.086"
E° - 16.37°	16.37°	16.37°	16.37°	16.37°	16.37°	16.37°
E" - .5"	.5"	.5"	.5"	.5"	.5"	.5"
F" - .5"	.5"	.5"	.5"	.5"	.5"	.5"
F° - 22.79°	22.79°	22.79°	22.79°	22.79°	22.79°	22.79°
1"	1"	1"	1"	1"	1"	1"
45°	45°	45°	45°	45°	45°	45°
D - 10% "T"	.044	.044	.044	.044	.044	.044
1 1/2" To hole	1.5"	1.5"	1.5"	1.5"	1.5"	1.5"
1 1/2" Depth of Hole	1.5"	1.5"	1.5"	1.5"	1.5"	1.5"
1/2" To Notch	.5"	.5"	.5"	.5"	.5"	.5"
1" Typ. Notch	1"	1"	1"	1"	1"	1"
1/2" Hole depth	.5"	.5"	.5"	.5"	.5"	.5"
1/2" Hole depth	.5"	.5"	.5"	.5"	.5"	.5"
1/2 T Hole Location	.221"	.219"	.219"	.220"	.221"	.217"
1/2 T Hole Location	.221"	.219"	.219"	.220"	.221"	.217"

INSPECTOR: Verne L. Jones 12-21-79

RECEIVING INSPECTOR:

INSPECTION REPORT

Page 2 of 2

TOOLING SPECIALISTS, INC.
Latrobe, Pa. 15650
Phone: (412) 539-2534

Dwg. # W004 | Revision 4 | Item
P. O. # 544-MXK-294103-RN | Work Order # 21235

CUSTOMER: (W) NES

PART DESCRIPTION: 10 Pcs 3" SCH. 160 Calibration Standards

IF OUT OF TOLERANCE, PLACE X IN BOX TO RIGHT OF DIMENSION.

DRAWING DIMENSIONS	Part No. G	X	Part No. H	X	Part No. I	X	Part No. J	X	Part No.	X	Part No.	X
Nom Wall "T" -.438	.440		.439		.439		.440					
O.D - 3.5"	3.5"		3.5"		3.5"		3.5"					
Hole Dia 3/32	.093		.093		.093		.093					
Holes 1/2 T -	.220"		.220"		.220"		.215"					
Length - 6 ±.5"	6.018"		6.018"		6.018"		6.018"					
A° - 180°	180°		180°		180°		180°					
C° - 35.55°	35.55°		35.55°		35.55°		35.55°					
C" - 1.086"	1.086"		1.086"		1.086"		1.086"					
E° - 16.37°	16.37°		16.37°		16.37°		16.37°					
E" - .5"	.5		.5		.5		.5					
F" - .5"	.5		.5		.5		.5					
F - 22.79°	22.79°		22.79°		22.79°		22.7°					
1"	1"		1"		1"		1"					
45°	45°		45°		45°		45°					
D - 10° T	.044		.044		.044		.044					
1 1/2" To Hole	1.5"		1.5"		1.5"		1.5"					
1 1/2" Depth of Hole	1.5"		1.5"		1.5"		1.5"					
1/2" To Notch	.5"		.5"		.5"		.5"					
1" Typ. Notch	1"		1"		1"		1"					
1/2" Hole depth	.5"		.5"		.5"		.5"					
1/2" Hole depth	.5"		.5"		.5"		.5"					
1/2 T Hole Location	.220"		.220"		.220"		.215"					
1/2 T Hole Location	.220"		.220"		.220"		.215"					

INSPECTOR: Wm. G. Jones 12-21-79

RECEIVING INSPECTOR:

NOM. PIPE SIZE"	SCHED ULE	NOM. WALL 'T'"	O.D."	HOLE DIAM ETER"	HOLES 1/4T	HOLES 1/2T	HOLES 3/4T	NOTCHES CIRC. O.D.	NOTCHES CIRC. I.D.	NOTCHES AXIAL O.D.	NOTCHES AXIAL I.D.	Length"	NOM. ARC A°	B°	B" (O.D.)	C°	C" (O.D.)	E°	E"& F"	F°
3	160	.438	3.5	3/32	-	2	-	X	X	X	X	6	180	-	-	35.55	1.086	16.37	.5	22.79

NOTE: Original dimensional requirements supplied to manufacturer.

General Data

1. E and F Dimension - minimum at bottom of notches (.500").
2. D Dimension - Typical all notches (10% of measured thickness) +.500" -.010".
3. A Dimension + to 360° and -.080" of arc.
4. Length +2" -.25".
5. Holes optional for T less than .8".
6. Flat blocks .8"T or less may contain 1/2T hole only.
7. Final acceptable dimensions to be based on intent.
8. Hole location to be based on actual "T".
9. Flat side of notches to be perpendicular notched surfaces, within 2°.
10. Side drilled holes to be within ± 1/32" tolerance.

Intent

1. C Dimension to be approximately 3/4" from edge of arc segment.
2. E and F dimension applicable to both sides of centerline so as to provide 1" long (at bottom) notches.
3. B Dimension to locate axial notches so as not to impose on end of hole at C location or on end of notches at centerline.
4. Circumferential reflectors to be positioned to allow 2T (Full Vee) calibration at 45° beam angle (not applicable for 1 1/2" Sch 80, 1 1/2" Sch 160, 2" Sch 80, 2" Sch 160, 3" Sch 40 & 3" Sch 80).
5. Circumferential holes and notches to be plus or minus .1" from ends.

COMBUSTION DIVISION

COMBUSTION DIVISION, COMBUSTION ENGINEERING, INC.
911 W. MAIN ST., CHATTANOOGA, TENN. 37402 615-265-4...

E-1557 (2/73)

CERTIFICATE OF TEST

DATE March 27, 1979

CUSTOMER Capitol Pipe & Steel Products, Inc.

CUSTOMER ORDER NO. 94963-00

SIZE 3" IPS Sch. 160 (.437" AW) SMLS S.S. TP-316/316-H

CONTRACT NO.

TM ORDER NO. 9-43-9-5079

SPEC ASTM A-376-77 & ASME SA-376

PAGE 1 OF 2

HEAT NO.	BHN	% EL (2")	ULT. STR. (PSI)	YIELD STR. (PSI)	CHEMICAL ANALYSIS MN	CR	NI	MO	CB	SI	CU	S	P	C	CB&TA OR V	B
N1046		79	82,800	37,900 *	1.57	17.35	13.03	2.49		.55		.016	.022	.052		
					1.61	17.45	13.05	2.48		.58		.014	.022	.050		
N2438		77	83,200	38,200 *	1.51	17.40	13.30	2.67		.59		.015	.021	.041		
					1.54	17.50	13.33	2.69		.59		.018	.022	.045		
N3207		77	89,600	38,400 *	1.53	17.60	12.68	2.52		.57		.016	.023	.057		
					1.56	17.73	12.65	2.53		.55		.018	.023	.060		
N3307		73	88,900	40,700 *	1.45	17.35	12.80	2.55		.53		.016	.023	.050		
					1.48	17.43	12.85	2.56		.56		.017	.023	.053		
N3594		80	88,300	41,500 *	1.55	17.33	12.65	2.50		.56		.012	.022	.043		
					1.59	17.45	12.68	2.51		.60		.013	.021	.047		
N5086		79	85,600	41,400 *	1.50	17.25	12.64	2.43		.51		.012	.022	.048		
					1.54	17.35	12.58	2.44		.54		.013	.022	.050		
N7210		78	87,600	44,200 *	1.53	17.50	12.80	2.55		.58		.016	.023	.057		
					1.56	17.60	12.83	2.56		.60		.019	.023	.060		
N7212		78	87,500	44,400 *	1.55	17.28	12.75	2.40		.55		.016	.024	.048		
					1.53	17.40	12.80	2.40		.54		.017	.024	.050		
N7217		79	86,500	42,900 *	1.52	17.33	12.60	2.46		.48		.015	.022	.052		
					1.56	17.45	12.65	2.45		.51		.016	.022	.060		

CONTINUED . .

APR 11 1979
CAPTIOL PIPE
QUALITY
ASSURANCE
6
ACCEPTED

242

COMBUSTION DIVISION

COMBUSTION DIVISION, COMBUSTION ENGINEERING, INC.
911 W. MAIN ST., CHATTANOOGA, TENN. 37402 615-265-4631

C-1557 (2/72)

CERTIFICATE OF TEST

DATE March 27, 1979

CUSTOMER Capitol Pipe & Steel Products, Inc.

CUSTOMER ORDER NO. 94963-00

SIZE 3" IPS Sch. 160 (.437" AW) SMLS S.S. TP-316/316-H

CONTRACT NO.

TM ORDER NO. 9-43-8-5079

SPEC ASTM A-376-77 & ASME SA-376

PAGE 2 OF 2

HEAT NO.	BHN	% EL (2")	ULT. STR. (PSI)	YIELD STR. (PSI)	CHEMICAL ANALYSIS											
					MN	CR	NI	MO	CB	SI	CU	S	P	C	CB&TA OR V	B

Bright annealed at 1950°F 5 minutes and rapidly cooled per C-E M&P Spec. T-9.1.5.1(b).

Flat OK

*Check Analysis

Hydro 2500 PSIG

Copper-copper sulfate test per ASTM A-262-75 Practice E OK

This is to certify that the finished product covered by this order was produced in the USA.

Material was manufactured under a Quality Assurance Program meeting the requirements of ASME Section III NCA-3800.

This is to certify that the above tubes have been inspected and tested in accordance with and have met all requirements of the specification.

Tube Manufacturing Plant
Inspection Supervisor

APR 11 1979

CAPTIOL PIPE
QUALITY
ASSURANCE
6
ACCEPTED

Subscribed and sworn to before me this 27th day of March, 1979.

NEW YORK POWER AUTHORITY
INDIAN POINT NUCLEAR POWER PLANT
UNIT NO. 3
CALIBRATION BLOCKS

INDIAN POINT UNIT NO. 3 DESIGNATION	:	INT-29
COMPONENT/SYSTEM	:	2" SCH 160 SIS, SIS HOTLEG, LETDOWN, DRAIN, RTD HOTLEG TAKE-OFF, RTD COLDLEG TAKE-OFF, SIS COLDLEG, SEAL INJECTION AND AUXILIARY SPRAY PIPING
SIZE/SCHEDULE	:	2" SCH 160 .344"T
MATERIAL	:	A376 TP316 STAINLESS STEEL
HEAT OR IDENTITY NUMBER	:	05324

ASME SECTION V AND XI 1983 EDITION THROUGH SUMMER 1983 ADDENDA REQUIREMENTS:

1. Section V : T-110 and T-548
2. Section XI : Article III-1100, Supplement 7 and IMA-2250
3. Material : A376 TP316 Stainless Steel
4. Size/Schedule: 2" SCH 160 .344"T

WESTINGHOUSE ELECTRIC CORPORATION - NSID - INSPECTION SERVICE DESIGN:

Calibration block was designed to meet intent of ASME Boiler and Pressure Vessel Code Section XI 1974 Edition through Summer 1975 Addenda.

RECOMMENDATION:

Calibration block design follows the quidelines of Section V and Section XI - 1983 Edition through Summer 1983 Addenda for Austenitic Piping. Class 1 Piping less than 4 inch nominal pipe size no longer requires Volumetric examination per the requirements of Section XI - 1983 Edition through Summer 1983 Addenda. Modifications of this design to meet the requirements of Section V and Section XI - 1983 Edition through Summer 1983 Addenda for calibration blocks for "ferritic piping and design T-547.1" would be to increase length to 8" and add I. D. circumferential notch and as required by Table III-3430-1 notch depth to 0.104T - 0.009T squared with tolerance of +10%-20%.

NOTES:

1. WHEN MEASURED FROM EITHER SIDE OF CENTERLINE MINIMUM LENGTH AT BOTTOM OF AXIAL NOTCHES TO BE 0.5" AS SHOWN IN SIDE VIEW.
2. NOTCH DEPTH 10% OF MEASURED THICKNESS + 0.005" - 0.010".
3. PREP ALLOWED IN AREA OF SIDE DRILLED HOLE SHALL NOT INFRINGE ON HOLE SIZE REQUIREMENTS.
4. CIRCUMFERENTIAL HOLES AND NOTCHES TO BE PLUS OR MINUS 0.1" FROM ENDS.
5. LOCATE AXIAL NOTCHES SO AS NOT TO IMPOSE ON END OF HOLES OR ON END OF NOTCHES AT CENTERLINE.
6. FLAT SIDE OF NOTCHES TO BE PERPENDICULAR NOTCHED SURFACES, WITHIN 2°.
7. HOLE LOCATION TO BE BASED ON ACTUAL "T".
8. SIDE DRILLED HOLE DIAMETER TOLERANCE TO BE WITHIN ± 0.03".
9. DRILL HOLES PERPENDICULAR TO RADIUS.
10. ARC DIMENSION +360° AND - 0.080".
11. LENGTH TOLERANCE TO BE +2.00"-0.25".

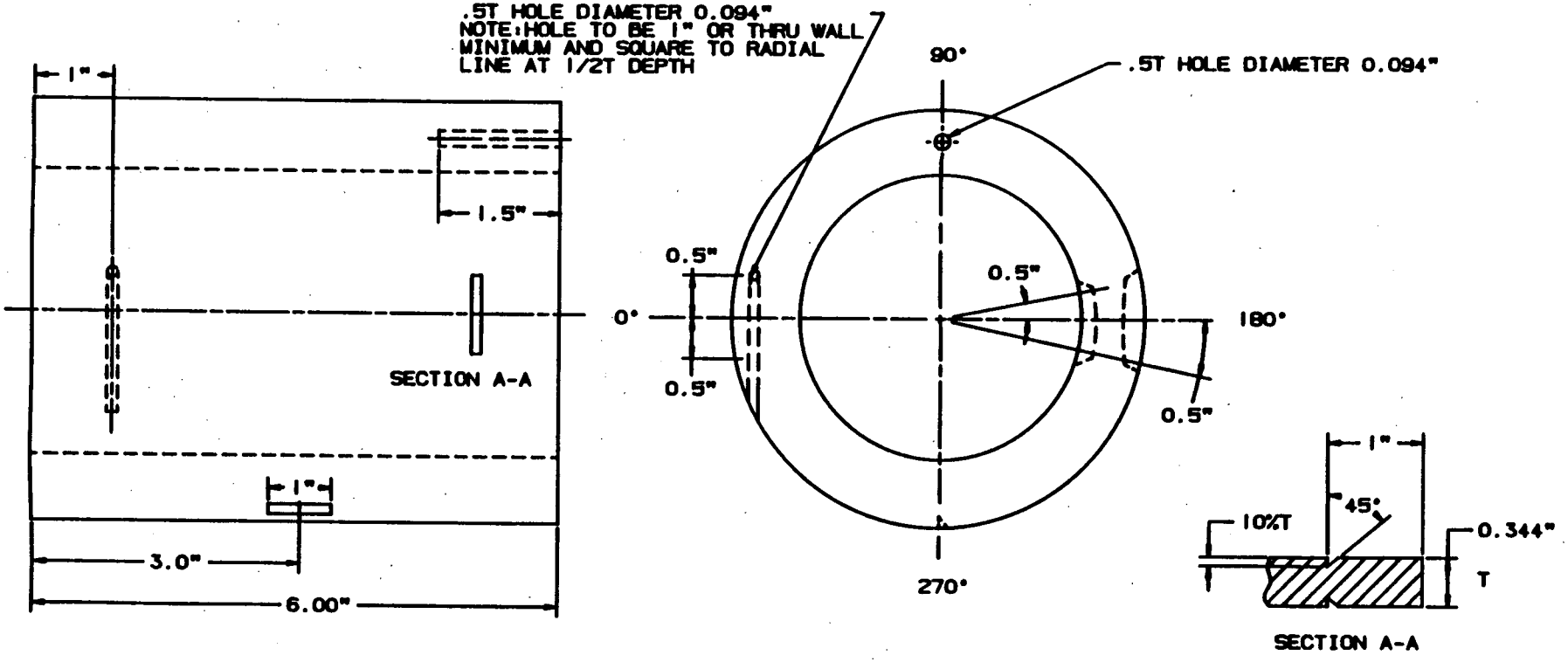

COMPUTER SYSTEM PLANT MODELING

NEDO TECHNICAL APPROVAL: Phillip C. Burka	11-20-86	Westinghouse Electric Corporation — PLANT ENGINEERING DIVISION - PITTSBURGH, PA
LEVEL III REVIEW: David Kirk	11-20-86	TITLE: CALIBRATION BLOCK INT-20 2" SCH 160 SIS,SIS HOTLEG,LETDOWN,DRAIN, RTD HOTLEG TAKEOFF, RTD COLDLEG TAKEOFF SIS COLDLEG,SEAL INJECTION AND AUXILIARY SPRAY PIPING 2" SCH 160 .344"T-C A376 TP316 STAINLESS STEEL HEAT NO.: 08524
ENG		
ENG		
MER		SIZE C — DR. NO. — REV.

REVISION — BY — DATE

NSD PA1010

Nuclear Service Division
QUALITY RELEASE

QR- 1731 REV. 0

PURCHASE ORDER	PART NAME	DRAWING & REV.
294/103	UT Calibration Blocks	W007 Rev 1

PAR NO.	CHG. NOTICE NO.	P.O. ITEM NO.	PROJ./S.O. NO.	QTY. ON ORDER	QTY. RELEASED
0	2	007	VISW-9327/ZABN-9327	75	6

SUPPLIER	E. SPEC. & REV.	ORDER
Tooling Specialists	N/A	COMPLETE ☐ YES ☑ NO

SERIAL OR IDENTIFICATION NOS.

HT # 05324 (A thru F)

The equipment shown hereon is released by W Quality Assurance. Shipment may be made subject to authorization by W Purchasing. In the Audit Checklist below, an A indicates acceptability, a C indicates a contingency and a W indicates that W QA has waived the auditing or witnessing of the attribute. All non-applicable items are lined out.

AUDIT CHECKLIST

- [x] Material Certifications
- [ ] ~~Heat Treat Records~~
- [ ] ~~RT Film and Records~~
- [ ] ~~PT/MT Records~~
- [x] Visual
- [x] Dimensional
- [ ] ~~UT Records~~
- [ ] ~~Personnel Qualifications-Welding, NDT~~
- [ ] ~~[illegible]~~
- [ ] ~~[illegible]~~
- [ ] ~~Non-Operating Electrical Tests~~
- [ ] ~~Operating Electrical Test~~
- [ ] ~~Pressure Test~~
- [ ] ~~Seat Tightness Test~~
- [ ] ~~Performance Test~~
- [x] Cleanliness
- [x] Packaging
- [ ] ~~Code Form~~
- [ ] ~~Painting~~
- [x] C. of C.

DEVIATION NOTICES AND REMARKS (ALL DEVIATIONS HAVE BEEN APPROVED BY THE RESPONSIBLE WESTINGHOUSE ENGINEER UNLESS A SPECIFIC EXCEPTION IS STATED.)

THE SUPPLIER CERTIFIES that for the equipment and material released, all contractual requirements have been met. Approved deviations, if any, are listed above.

SUPPLIER SIGNATURE: Thomas Shaw DATE: 8/30/79
TITLE:

The equipment shown hereon is released by W Quality Assurance. Shipment may be made subject to authorization by W Purchasing.

The equipment supplier has certified that the equipment above meets all requirements of the purchase order, drawings and specifications. Westinghouse has reviewed evidence supporting this release and except as specified above has detected no deviations from such requirements. This release does not waive any rights Westinghouse may have under the purchase order including Westinghouse's right to reject the equipment upon discovery of any such deviations after arrival at destination.

K.R. Moore 8-30-79
Westinghouse Quality Assurance Representative

REQUISITIONER

Tooling Specialists, Inc.
Certification Letter of Compliance

To: (W) NES
PO Box 355
Pittsburgh Pa. 15230

Date: 8/28/79

Tooling Specialists, Inc. certifies that all purchase order requirements have been met for the following equipment and material. Any deviations from the order requirements have had Westinghouse NSD approval prior to shipment. Deviation Notice (D/N) numbers applicable are NA (N/A if not applicable).

Westinghouse Purchase Order Number 544-MIK-294103-RN
P.O. Change Notice number(s) NA
Procurement Advisory Release (PAR) number(s) NA

P.O. Item #	Dwg. or Sketch and Rev. #	Base Mat'l & Heat #	Weld Joining Mat'l & Heat #	Cladding Mat'l and Heat #
007 6pc	W007 Rev 1	HT 05324	NA	NA1

weld joining procedure used NA
(include revision #)
cladding procedure used NA
(include revision #)
heat treating procedure used NA
(include revision #)

One copy each of the following documents as required by the purchase order are attached to this letter. All (including letter) are included with this shipment.

- ✓ Westinghouse Quality Release
- ✓ Base material mill test report(s)
- NA Weld operator certification
- NA Heat treat chart(s)
- ✓ Inspection Report
- NA Weld joining material mill test report
- NA Cladding material mill test report
- Other

One additional copy each of this letter and the above documents are hereby forwarded to the Westinghouse Buyer.

All records supporting this certification letter are available at Tooling Specialists.

Thomas D Shearer
(signature)

Tooling Specialists, Inc.

INSPECTION REPORT

Page _____ of _____

TOOLING SPECIALISTS, INC.
Latrobe, Pa. 15650
Phone: (412) 539-2534

Dwg. #

Revision

Item

P. O. #

Work Order # 21235

CUSTOMER:

PART DESCRIPTION:
2" Sch 160 Ht. # 053.24

IF OUT OF TOLERANCE, PLACE X IN BOX TO RIGHT OF DIMENSION.

DRAWING DIMENSIONS		Part No. A X	Part No. B X	Part No. C X	Part No. D X	Part No. E X	Part No. F
Nom. wall Thickness		.355	.355	.327	.350	.339	.352
Cir. Notch	O.D.	.035	.035	.032	.035	.034	.035
	I.D.	.035	.035	.032	.035	.034	.035
Axial Notch	O.D.	.031	.033	.035	.034	.035	.034
A°		360°	360°	360°	360°	360°	360°
Length		6.343	6.290	6.255	6.112	6.129	6.095
hole dia.		3/32	3/32	3/32	3/32	3/32	3/32
1/2T End hole		.173	.170	.159	.161	.159	.163
1/2T side hole		.162	.156	.167	.160	.161	.159
	E	24°	24°	24°	24°	24°	24°
	F	34°45'	34°45'	34°45'	34°45'	34°45'	34°45'

INSPECTOR: [illegible] 8/24/79
Thomas Shearer

RECEIVING INSPECTOR:

NOM. PIPE SIZE"	SCHED ULE	NOM. WALL 'T'"	O.D."	HOLE DIAM ETER"	HOLES 1/4T	1/2T	3/4T	NOTCHES CIRC. O.D.	CIRC. I.D.	AXIAL O.D.	AXIAL I.D.	Length"	NOM. ARC A°	B°	B" (O.D.)	C°	C" (O.D.)	E°	E"& F"	F°
2	160	.344	2.375	3/32	-	2	-	X	X	X	-	6	360	-	-	-	-	-	.5	-

NOTE: Original dimensional requirements supplied to manufacturer.

General Data

1. E and F Dimension - minimum at bottom of notches (.500").
2. D Dimension - Typical all notches (10% of measured thickness) +.500" -.010".
3. A Dimension + to 360° and -.080" of arc.
4. Length +2" -.25".
5. Holes optional for T less than .8".
6. Flat blocks .8"T or less may contain 1/2T hole only.
7. Final acceptable dimensions to be based on intent.
8. Hole location to be based on actual "T".
9. Flat side of notches to be perpendicular notched surfaces, within 2°.
10. Side drilled holes to be within ± 1/32" tolerance.

Intent

1. C Dimension to be approximately 3/4" from edge of arc segment.
2. E and F dimension applicable to both sides of centerline so as to provide 1" long (at bottom) notches.
3. B Dimension to locate axial notches so as not to impose on end of hole at C location or on end of notches at centerline.
4. Circumferential reflectors to be positioned to allow 2T (Full Vee) calibration at 45° beam angle (not applicable for 1 1/2" Sch 80, 1 1/2" Sch 160, 2" Sch 80, 2" Sch 160, 3" Sch 40 & 3" Sch 80).
5. Circumferential holes and notches to be plus or minus .1" from ends.

AL TECH

Willowbrook Av[illegible]e, Dunkirk, N.Y. 14048

OFFICIAL COPY TEST

PURCHASE ORDER NO AND DATE	NOT BEFORE	INQUIRY NO AND DATE	ACCEPTING MILL	MILL ORDER NO	DATE SHIPPED	INVOICE NO
94959-00N 02/06/79		1	WATERVLIET	0-0-99658	5/15/79	E-100341

SOLD TO:
BOWLINE CORPORATION, CAPITOL
PIPE & STEEL PRODUCTS CO DIV
301 CITY LINE AVENUE
BALA CYNWYD PA 19004

SHIP TO:
BOWLINE CORPORATION, CAPITOL
PIPE & STEEL PRODUCTS DIV
HWAY 115 & HENDERSON COX ROAD
CHARLOTTE N C 28213

PRODUCT SPECIFICATIONS

AL TECH STAINLESS STEEL TYPE 316/316-H
COLD FINISHED EXTRUDED ANLD & PICKLED SMLS PIPE TO
ASTM-A-376 & ASME-SA-376

JUN 21 1979

CAPITOL PIPE QUALITY ASSURANCE ACCEPTED

TEM	DESCRIPTION	QUANTITY	POUNDS	C/P	TEST PCS	COPIES SOLD TO C	P	COPIES SHIP TO C
1	T 2.3750 .3430 17-24 2" SCH 160					5	5	

CHEMICAL ANALYSIS — STANDARD ELEMENTS & PERCENTAGES — ADDITIONAL ELEMENTS

HEAT NO	C	MN	P	S	SI	CR	NI	AL	MO	CU	/ Co
05324	.060	1.46	.027	.023	.37	16.52	11.22	-	2.04	.33	.18 (LADLE)
	.063	1.50	.027	.025	.41	16.47	11.19	-	2.06	.34	.17 (CHECK PER A-376)

PHYSICAL PROPERTIES

HEAT NO	TENSILE PSI	YIELD PSI	ELONG %	BRINELL / ROCKWELL	TEST NO
05324	87,200	40,800	57.0	Rb83/84	01-001 & 01-001-75

Tooling Spec.
R9-1245-A
N10800

FLATTENING TEST: OK
HYDROSTATIC TEST: OK 2500psi
ORIENTATION OF TENSILE SPECIMEN-LONGITUDINAL
MATERIAL HAS BEEN ANNEALED PER OUR SELAS ANNEAL PROCEDURE WE6501 AND IS IN THE SOLUTION ANNEALED CONDITION AS A RESULT OF BEING WATER QUENCHED TO LESS THAN 800F IN THREE MINUTES OR LESS
THIS MATERIAL WAS MANUFACTURED IN ACCORDANCE WITH THE QUALITY ASSURANCE PROGRAM AS AUDITED BY CAPITOL PIPE & STEEL PDTS ON 10/11/77

SUBSCRIBED & SWORN
BEFORE ME THIS DATE: 5/15/79

WILLIAM A. BULMER
Notary Public in the State of New York
Residing in Albany County
No. 4645597 Expires March 30, 1981

W. B. ACKERMAN, TEST ENGINEER 5/15/79
ANALYSIS AND RESULTS REPORTED AS ABOVE

AL TECH SPECIALTY STEEL CORPORATION

NEW YORK POWER AUTHORITY
INDIAN POINT NUCLEAR POWER PLANT
UNIT NO. 3
CALIBRATION BLOCKS

INDIAN POINT UNIT NO. 3 DESIGNATION	:	INT-30
COMPONENT/SYSTEM	:	1.5" SCH 160 SIS COLDLEG AND SEAL INJECTION PIPING
SIZE/SCHEDULE	:	1.5" SCH 160 .281"T
MATERIAL	:	A376 TP316 STAINLESS STEEL
HEAT OR IDENTITY NUMBER	:	NNN7B

ASME SECTION V AND XI 1983 EDITION THROUGH SUMMER 1983 ADDENDA REQUIREMENTS:

1. Section V : T-110 and T-548
2. Section XI : Article III-1100, Supplement 7 and IMA-2250
3. Material : A312 TP316 Stainless Steel
4. Size/Schedule: 1.5" SCH 160 .281"T

WESTINGHOUSE ELECTRIC CORPORATION - NSID - INSPECTION SERVICE DESIGN:

Calibration block was designed to meet intent of ASME Boiler and Pressure Vessel Code Section XI 1974 Edition through Summer 1975 Addenda.

RECOMMENDATION:

Calibration block design follows the quidelines of Section V and Section XI - 1983 Edition through Summer 1983 Addenda for Austenitic Piping. Class 1 Piping less than 4 inch nominal pipe size no longer requires Volumetric examination per the requirements of Section XI - 1983 Edition through Summer 1983 Addenda. Modifications of this design to meet the requirements of Section V and Section XI - 1983 Edition through Summer 1983 Addenda for calibration blocks for "ferritic piping and design T-547.1" would be to increase length to 8" and add I. D. circumferential notch. P-Number Groupings for Materials A376 TP316 Stainless Steel and A312 TP316 Stainless Steel are equivalent.

NOTES:

1. WHEN MEASURED FROM EITHER SIDE OF CENTERLINE MINIMUM LENGTH AT BOTTOM OF AXIAL NOTCHES TO BE 0.5" AS SHOWN IN SIDE VIEW.
2. NOTCH DEPTH 10% OF MEASURED THICKNESS + 0.005" - 0.010".
3. PREP ALLOWED IN AREA OF SIDE DRILLED HOLE SHALL NOT INFRINGE ON HOLE SIZE REQUIREMENTS.
4. CIRCUMFERENTIAL HOLES AND NOTCHES TO BE PLUS OR MINUS 0.1" FROM ENDS.
5. LOCATE AXIAL NOTCHES SO AS NOT TO IMPOSE ON END OF HOLES OR ON END OF NOTCHES AT CENTERLINE.
6. FLAT SIDE OF NOTCHES TO BE PERPENDICULAR NOTCHED SURFACES, WITHIN 2°.
7. HOLE LOCATION TO BE BASED ON ACTUAL "T".
8. SIDE DRILLED HOLE DIAMETER TOLERANCE TO BE WITHIN ± 0.03".
9. DRILL HOLES PERPENDICULAR TO RADIUS.
10. ARC DIMENSION +360° AND - 0.080".
11. LENGTH TOLERANCE TO BE +2.00"-0.25".

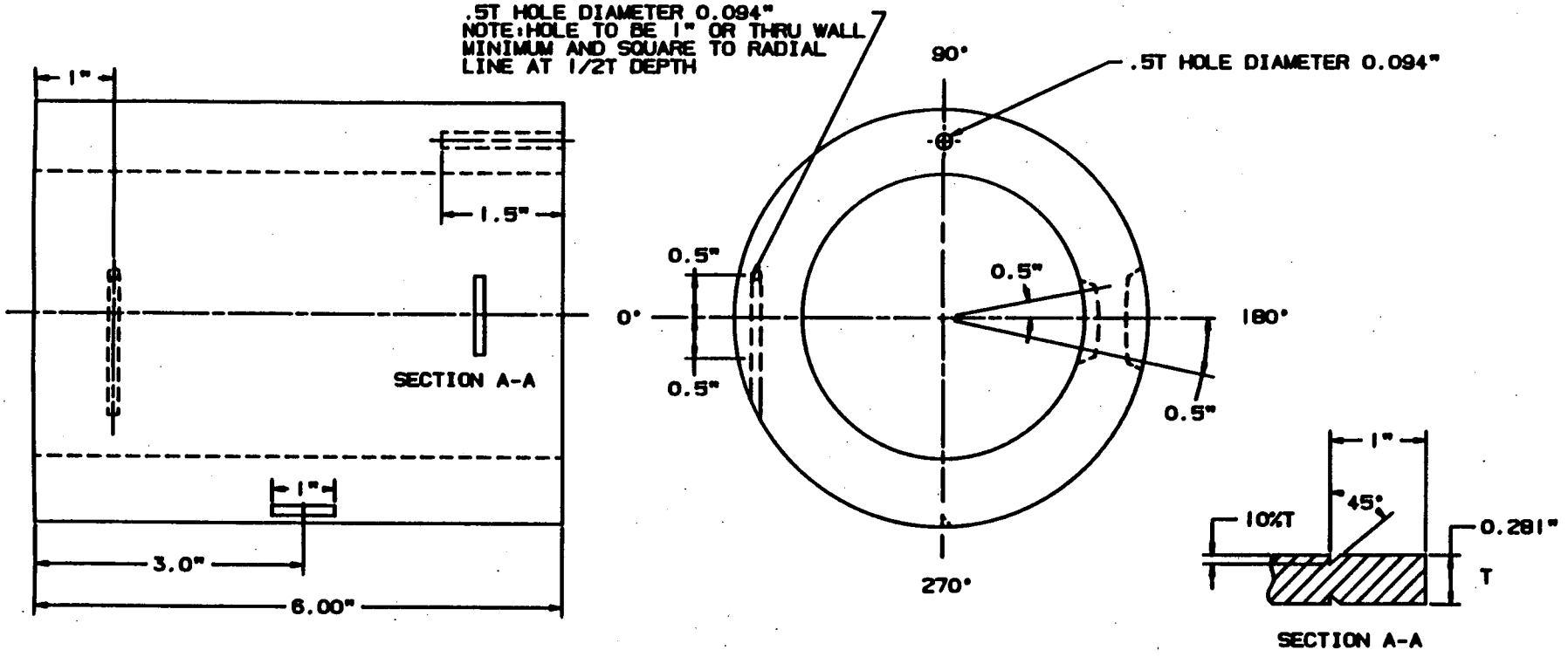

COMPUTER SYSTEM PLANT MODELING

NSSS TECHNICAL APPROVAL Phillip C. Burkes	11-20-86	Westinghouse Electric Corporation PLANT ENGINEERING DIVISION - PITTSBURGH, PA
LEVEL III REVIEW David Kunk	11-20-86	TITLE CALIBRATION BLOCK INT-30 1.5" SCH 160 SIS COLDLEG AND SEAL INJECTION PIPING 1.5" SCH 160 .281"-F A376 TP316 STAINLESS STEEL HEAT NO.: NNN7B
ENG		
ENG		
MGR		SIZE C DWG. NO. REV.

REVISION

NSD PA1010

Nuclear Service Division
QUALITY RELEASE

QR- 1623 REV. 0

PURCHASE ORDER	PART NAME	DRAWING & REV	
294103	Calibration Blocks	#003 Rev 3, #004 Rev 4, #005 Rev 5, #006 Rev 6, #007 Rev 1	

PAR NO.	CHG. NOTICE NO.	P.O. ITEM NO.	PROJ./S.O. NO.	QTY. ON ORDER	QTY. RELEASED
0	1	1 thru 6, 8 thru 15	VISN-9327/IPBN-9327	65	59

SUPPLIER	E. SPEC. & REV.	ORDER
Tooling Specialists	N/A	COMPLETE ☐ YES ☑ NO

SERIAL OR IDENTIFICATION NOS.

MT #: 30106 (6 pieces), NNN7B (A thru F), N7212 (A & B), 182 (A thru H), 8051726 (A thru H), M9948 (A thru D), 2626-8-1 (A thru E), 245865 (A thru H), 534982 (A thru F), 2633-13-1 (A thru F).

The equipment shown hereon is released by W Quality Assurance. Shipment may be made subject to authorization by W Purchasing. In the Audit Checklist below, an A indicates acceptability, a C indicates a contingency and a W indicates that W QA has waived the auditing or witnessing of the attribute. All non-applicable items are lined out.

AUDIT CHECKLIST

[A] Material Certifications	~~[ ] Non-Operating Electrical Tests~~
~~[ ] Heat Treat Records~~	~~[ ] Operating Electrical Test~~
~~[ ] RT Film and Records~~	~~[ ] Pressure Test~~
~~[ ] PT/MT Records~~	~~[ ] Seat Tightness Test~~
[A] Visual	~~[ ] Performance Test~~
[A] Dimensional	[A] Cleanliness
~~[ ] UT Records~~	[W] Packaging
~~[ ] Personnel Qualification: Welding, NDT~~	~~[ ] Code Form~~
~~[ ]~~	~~[ ] Painting~~
~~[ ]~~	[A] C.of C.

DEVIATION NOTICES AND REMARKS (ALL DEVIATIONS HAVE BEEN APPROVED BY THE RESPONSIBLE WESTINGHOUSE ENGINEER UNLESS A SPECIFIC EXCEPTION IS STATED.)

Six of the above blocks to be shipped to IPP.
s/N's: IPP-8, IPP-11, IPP-27, IPP-34, IPP-35, IPP-36.

THE SUPPLIER CERTIFIES that for the equipment and material released, all contractual requirements have been met. Approved deviations, if any, are listed above.

SUPPLIER SIGNATURE: Thomas Hiram DATE: 6/29/79
TITLE:

The equipment shown hereon is released by W Quality Assurance. Shipment may be made subject to authorization by W Purchasing.

The equipment supplier has certified that the equipment above meets all requirements of the purchase order, drawings and specifications. Westinghouse has reviewed evidence supporting this release and except as specified above has detected no deviations from such requirements. This release does not waive any rights Westinghouse may have under the purchase order including Westinghouse's right to reject the equipment upon discovery of any such deviations after arrival at destination.

K.R. Moran 6-29-79
Westinghouse Quality Assurance Representative

REQUISITIONER

TOOLING
SPECIALISTS
INCORPORATED

MACHINE TOOL BUILDERS — SPECIAL MACHINING — DIES — ENGINEERING SERVICE

P. O. BOX 251, LATROBE, PA. 15650 Phone: (412) 539-2534

LETTER OF COMPLIANCE

June 29, 1979

This is a statement of compliance to the requirements of Westinghouse Purchase Order Number 544-MXK-294103-RN.

All required processes, tests, and inspections have been performed. Inspection data sheets, heat treat charts, weld wire and material certifications are attached as required by the Purchase Order.

A listing of Purchase Order items in this shipment is attached.

Documented evidence of compliance supporting this certification is available at Tooling Specialists.

Sincerely yours,

Thomas D. Shearer

Thomas D. Shearer
Manager Special Products

TDS:keo

2" Sch 160 Material has not been received yet

353

INSPECTION REPORT

Page _____ of _____

TOOLING SPECIALISTS, INC.
Latrobe, Pa. 15650
Phone: (412) 539-2534

Dwg. #

Revision

Item

P. O. #

Work Order # 21-235

CUSTOMER:

PART DESCRIPTION:
1½ Sch 160 HT NNN 7B

IF OUT OF TOLERANCE, PLACE X IN BOX TO RIGHT OF DIMENSION.

DRAWING DIMENSIONS		Part No. A X	Part No. B X	Part No. C X	Part No. D X	Part No. E X	Part No. F X
Nom. Wall Thickness		.290	.282	.294	.293	.292	.284
Cir Notch	O.D.	.029	.028	.029	.029	.029	.028
	I.D.	.029	.028	.029	.029	.029	.028
Axial Notch	O.D.	.029	.028	.029	.028	.028	.029
Length		6.050	6.030	6.015	6.041	6.034	6.045
A°		.360	.360	.360	.360	.360	.360
½T holes	90°	.143	.143	.143	.145	.143	.144
	180°	.143	.146	.141	.141	.142	.146
Hole dia.		3/32	3/32	3/32	3/32	3/32	3/32
E & F		.5	.5	.5	.5	.5	.5

INSPECTOR: Thom. Skinner

RECEIVING INSPECTOR:

NOM. PIPE SIZE"	SCHED ULE	NOM. WALL 'T'"	O.D."	HOLE DIAM ETER"	HOLES 1/4T	1/2T	3/4T	NOTCHES CIRC. O.D.	CIRC. I.D.	AXIAL O.D.	AXIAL I.D.	Length"	NOM. ARC A°	B°	B" (O.D.)	C°	C" (O.D.)	E°	E"& F"	F°
1.5	160	.281	1.9	3/32	-	2	-	X	X	X	-	6	360	-	-	-	-	-	.5	-

NOTE: Original dimensional requirements supplied to manufacturer.

General Data

1. E and F Dimension - minimum at bottom of notches (.500").
2. D Dimension - Typical all notches (10% of measured thickness) +.500" -.010".
3. A Dimension + to 360° and -.080" of arc.
4. Length +2" -.25".
5. Holes optional for T less than .8".
6. Flat blocks .8"T or less may contain 1/2T hole only.
7. Final acceptable dimensions to be based on intent.
8. Hole location to be based on actual "T".
9. Flat side of notches to be perpendicular notched surfaces, within 2°.
10. Side drilled holes to be within ± 1/32" tolerance.

Intent

1. C Dimension to be approximately 3/4" from edge of arc segment.
2. E and F dimension applicable to both sides of centerline so as to provide 1" long (at bottom) notches.
3. B Dimension to locate axial notches so as not to impose on end of hole at C location or on end of notches at centerline.
4. Circumferential reflectors to be positioned to allow 2T (Full Vee) calibration at 45° beam angle (not applicable for 1 1/2" Sch 80, 1 1/2" Sch 160, 2" Sch 80, 2" Sch 160, 3" Sch 40 & 3" Sch 80).
5. Circumferential holes and notches to be plus or minus .1" from ends.

COMBUSTION ENGINEERING, INC.
CHATTANOOGA DIVISION

1-1/2 Sch 160 T316

Form E-1557 Rev. 2
2 63

February 4, 1972
DATE

CERTIFICATE OF TEST

PAGE 1 OF 1

PURCHASER	CONTRACT NAME & NO.	SPEC.	OD	MW	TM ORDER NO.	PURCHASE ORDER NO.
Capitol Pipe	1-1/2" Sch. 160 IPS (.281 AW) Cold Finished Smls. S.S., TP-316 Pipe Per ASTM A-376				B-19828	S-59572-00N

HEAT NO.	BHN	% EL (2")	ULT. STR. (PSI)	YIELD STR. (PSI)	CHEMICAL ANALYSIS MN	CR	NI	MO	CB	SI	CU	S	P	C	CB&TA OR V	B
NNN6B		51	93,000	75,175	1.28	17.30	12.65	2.52		.52		.016	.022	.071		
				*	1.28	17.15	12.45	2.43		.51		.016	.021	.068		
NNN7B		50	91,550	74,300	1.32	17.20	13.00	2.38		.54		.015	.020	.065		
				*	1.40	17.00	13.03	2.36		.57		.015	.019	.061		

* - Check Analysis

Bright annealed at 1950°F, 5 minutes and rapidly cooled.

Ultrasonically inspected after heat treatment to 5% X 1" notch per C-E Spec. T-2.4.4.4(d)

Flat Tests: OK Hydro Test (PSIG): 2500

Tooling Specialists
5482

This is to certify that the above material has been inspected and tested in accordance with and has met all the requirements of the specification.

Fred L. Farr
Tube Manufacturing

Subscribed and Sworn to before me this 4th day of February 1972.

Thera E. Shipley
My Commission Expires October 7, 1973

NEW YORK POWER AUTHORITY
INDIAN POINT NUCLEAR POWER PLANT
UNIT NO. 3
CALIBRATION BLOCKS

INDIAN POINT UNIT NO. 3 DESIGNATION	:	INT-31
COMPONENT/SYSTEM	:	REACTOR VESSEL CLOSURE HEAD
SIZE/SCHEDULE	:	8.0"T X 28.0"L X 6.0"W
MATERIAL	:	SA533 CLASS 1 GRADE B CARBON STEEL
HEAT OR IDENTITY NUMBER	:	D8366-5

ASME SECTION V AND XI 1983 EDITION THROUGH SUMMER 1983 ADDENDA REQUIREMENTS:

1. Section V : T-434
2. Material : A508-64 Carbon Steel and SA302 Grade B Carbon Steel
3. Size/Schedule: 8.0"T x 24.0"L x 6.0"W

WESTINGHOUSE ELECTRIC CORPORATION - NSID - INSPECTION SERVICE DESIGN:

Calibration block was designed to meet intent of ASME Boiler and Pressure Vessel Code Section XI 1974 Edition through Summer 1975 Addenda.

RECOMMENDATION:

Calibration block to meet requirements of Section V and Section XI - 1983 Edition through Summer 1983 Addenda would require material of A508-64 Carbon Steel or SA302 Grade B Carbon Steel (although P-Number groupings are equivalent with SA533 Class 1 Grade B Carbon Steel), and as required by Figure T-434 cladding to be 100% of width and length, and hole tolerances documented.

NOTES:
1. DRILL AND REAM 6 HOLES 3" MINIMUM DEEP.
2. CLAD MATERIAL 309 AND 308 STAINLESS STEEL.
3. CLAD DIRECTION TO BE PARALLEL TO HOLE AXIS.
4. CLADDING TO BE DONE MANUALLY.
5. HEAT TREAT BLOCK 1150°F ±25°F. RATE OF HEATING ABOVE 600°F NOT TO EXCEED 100°F PER HOUR. HOLD FOR 2 HOURS. FURNACE COOL TO 600°F AT THE RATE OF COOLING NOT TO EXCEED 100°F PER HOUR.

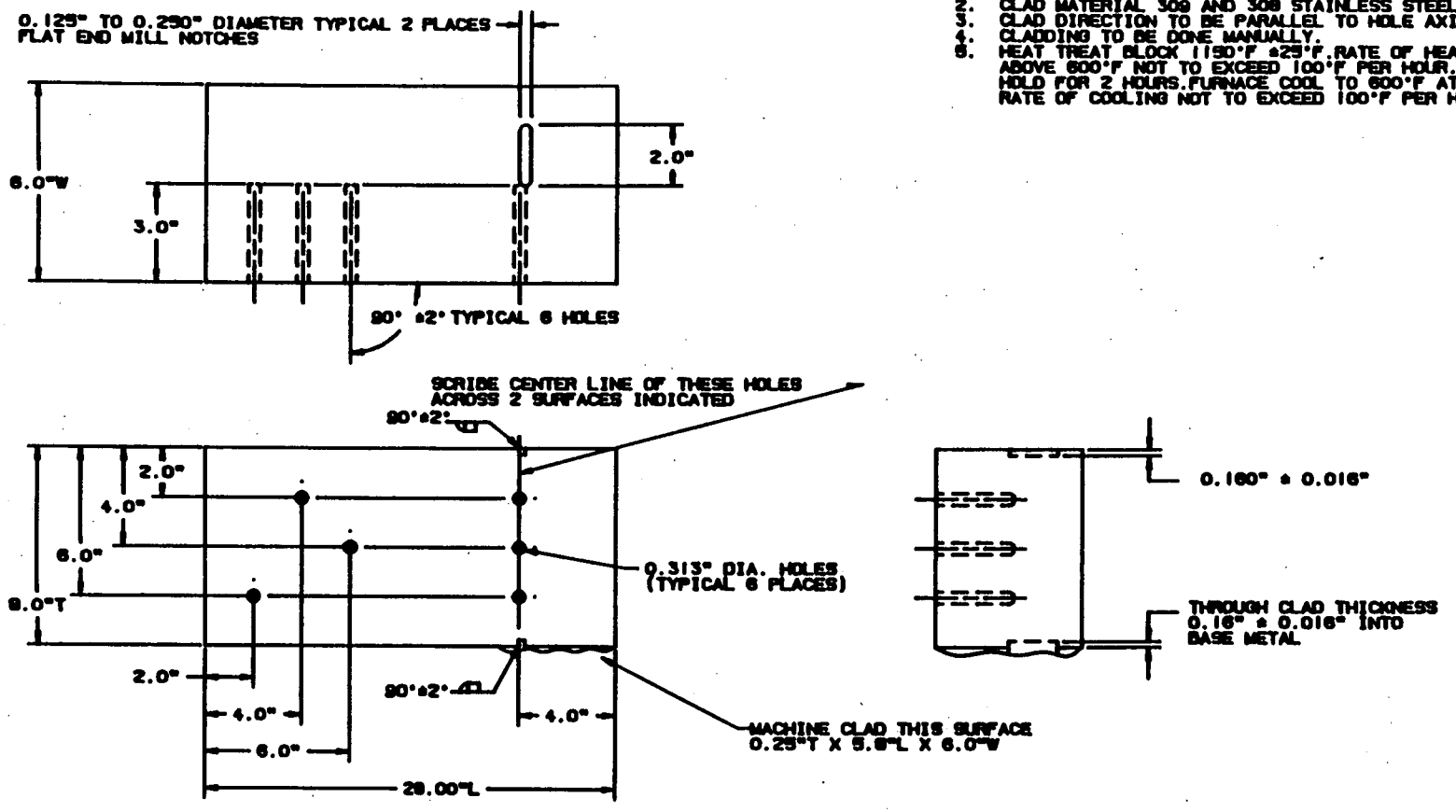

COMPUTER SYSTEM PLANT MODELING

NSSS TECHNICAL APPROVAL Philip C. Bukes	11-20-86	Westinghouse Electric Corporation PLANT ENGINEERING DIVISION - PITTSBURGH, PA
LEVEL III REVIEW David Tomek	11-20-86	TITLE CALIBRATION BLOCK INT-31 REACTOR VESSEL CLOSURE HEAD 9.0"T X 28.0"L X 6.0"W SA533 CLASS 1 GRADE B CARBON STEEL HEAT NO.: D8366-5
ENG		
ENG		
MFR		SIZE C DWG. NO. REV.

REVISION

NSD PA1011

Nuclear Service Division

SUPPLIER QUALITY RELEASE

① SUPPLIER _____ QR- S 1085

PURCHASE ORDER ①	PART NAME ①	DRAWING & REV. ②
544-MXG-410683-B	Calibration Block	W 001 Rev 4

PAR NO. ②	CHG. NOTICE NO. ②	P.O. ITEM NO. ③	QTY. ON ORDER ④	QTY. RELEASED ⑤
	000	IT 1 - IT2	1	2

PROJECT AND SHOP ORDER ①	E. SPEC. NO. ①	ORDER ⑤
	NA	COMPLETE ☒ YES ☐ NO

SERIAL OR IDENTIFICATION NOS. ⑥

IT 1 8 × 28 × 6 HT D8366-5

IT 2 525 × 18 375 × 6 HT R 1

The equipment shown hereon is released by our QC Department. Where indicated by a check mark (✓), records and data have been reviewed and approved. Records of objective edivence are on file and subject to Westinghouse Review. Non applicable items are lined out.

AUDIT CHECKLIST ⑦

☑ Material Certifications	☐ Non-Operating Electrical Tests
☑ Heat Treat Records	☐ ~~Operating Electrical Test~~
☐ RT Film and Records	☐ Pressure Test
☐ PT/MT Records	☐ Seat Tightness Test
☑ Visual	☐ Performance Test
☑ Dimensional	☐ Cleanliness
☐ UT Records	☐ Packaging
☐ Personnel Qualification: Welding, NDT	☐ Code Form
☐	☐ Painting
☐	☐

DEVIATION NOTICES AND REMARKS (ALL DEVIATIONS HAVE BEEN APPROVED BY THE RESPONSIBLE WESTINGHOUSE ENGINEER UNLESS A SPECIFIC EXCEPTION IS STATED.) ⑧

WE CERTIFY THAT FOR THE EQUIPMENT AND MATERIAL RELEASED, ALL CONTRACTUAL REQUIREMENTS HAVE BEEN MET. APPROVED DEVIATIONS, IF ANY, ARE LISTED ABOVE.

⑨ SUPPLIER SIGNATURE _____ TITLE _____ DATE _____

SUPPLIER

Tooling Specialists, Inc.
Certification Letter of Compliance

To: (W) NES
PO Box 355
Pittsburgh Pa. 15230

Date: 2/25/81

Tooling Specialists, Inc. certifies that all purchase order requirements have been met for the following equipment and material. Any deviations from the order requirements have had Westinghouse NSD approval prior to shipment. Deviation Notice (D/N) numbers applicable are NA (N/A if not applicable).

Westinghouse Purchase Order Number 544-MXG-410683 - BN
P.O. Change Notice number(s) oo
Procurement Advisory Release (PAR) number(s) oo

P.O. Item #	Dwg. or Sketch and Rev. #	Base Mat'l & Heat #	Weld Joining Mat'l & Heat #	Cladding Mat'l and Heat #
001 1pc	W001 Rev 4	HT D8366-5	308	308 06804
			309	309 19944
002 1pc	W001 Rev 4	PC 1	308	308 306370
			309	309 19944

weld joining procedure used NA
(include revision #)
cladding procedure used NES-1001-H
(include revision #)
heat treating procedure used (W) NES
(include revision #)

One copy each of the following documents as required by the purchase order are attached to this letter. All (including letter) are included with this shipment.

- ✓ Westinghouse Quality Release
- ✓ Base material mill test report(s)
- ___ Weld operator certification
- ✓ Heat treat chart(s)
- ✓ Inspection Report
- ___ Weld joining material mill test report
- ✓ Cladding material mill test report
- ___ Other ___

One additional copy each of this letter and the above documents are hereby forwarded to the Westinghouse Buyer.

All records supporting this certification letter are available at Tooling Specialists.

Thomas D Shaw
(signature)

Tooling Specialists, Inc.

INSPECTION REPORT

Page 1 of 1

TOOLING SPECIALISTS, INC.
Latrobe, Pa. 15650
Phone: (412) 539-2534

Dwg. #	Revision	Item
W 001	4	

P. O. #	Work Order #
Item #001 544-MXG-410683-BN	22350

CUSTOMER: W NES.

PART DESCRIPTION: 1 Calibration Block 8"T x 28"L x 6"W H.T. D8366-5

IF OUT OF TOLERANCE, PLACE X IN BOX TO RIGHT OF DIMENSION.

DRAWING DIMENSIONS	Part No.	X	Part No.	X	Part No.	X	Part No.	X	Part No.	X	Part No.	X
6 Holes	OK											
5/16 Drilled & Reamed	.313"											
3" Dp.	3.02"											
(2) 2" Long (Notches)	2.00"											
(2) 1/8" to 1/4" Dia. Flat end mill	1/4"											
2 % "T" Deep	.160"											
Through Clad Thickness 2 % Dp. into base metal	.160"											
(2) 3" To notches	3.00"											
(2) 2" Length Notches	2.00"											
"T" - 8"	8.00											
(2) T/4 - 2" From Top	2.00"											
(2) T/2 - 4" From Bottom	4.00"											
T/4 - 2" From Bottom	2.00"											
T/4 - 2" From Left Side	2.00"											
T/2 - 4" From Left Side	4.00"											
3/4 T - 6" From Left Side	6.00"											
T/2 - 4" From Right Side	4.00"											
Clad* Area - 5.8	5.8"											
3.5T - 28	28.00"											
Scribe ℄ of Notches & Holes opp. Side of Cladding	OK											
"T" or 6" Min.	6.006"											

INSPECTOR: Wesley J. Jones 2-4-81

RECEIVING INSPECTOR:

263

PURCHASER:

3 • WESTINGHOUSE ELEC. CORP.
NES DIVISION
BOX 355
PITTSBURGH, PA.
15230

LUKENS STEEL COMPANY

COATESVILLE, PA. 19320

TEST CERTIFICATE

MILL ORDER NO.	CUSTOMER P.O.	
68125 1	544-MXK-401347 -XN	92879 DG

DATE: 10/02/79 FILE NO. 7-25-99

CONSIGNEE:

TOOLING SPECIALITIES
P.O. BOX 251
ATTN. TOM SHEARER
LATROBE, PA. 15650

THIS MATERIAL HAS BEEN MANUFACTURED AND TESTED IN ACCORDANCE WITH PURCHASE ORDER REQUIREMENTS AND SPECIFICATION(S):

SA-533 CL. 1 TYPE-B ASME CODE SECT. II & III SUB NB 1974 EDITION N-1160 8/4/81

BEND TEST HOMOGENEITY TEST

CHEMICAL ANALYSIS

MELT NO.	C	MN	P	S	CU	SI	NI	CR	MO	V	TI	AL	B		Basic Proc.
D8366	.18	1.29	.010	.005		.22	.65		.56				VIP Steel		Elec.

PHYSICAL PROPERTIES

MELT NO.	SLAB. NO.	YIELD PSI X100	TENSILE PSI X100	% ELONG. IN 2	% R.A.	BHN	IMPACTS				DESCRIPTION
D8366	5	705	900	22							10- 10 X 14 X 40
		724	905	21							

PLATES AND TESTS HEATED TO 1625 F./1675 F., HELD 1/2 HR. PER INCH MIN. AND WATER QUENCHED, RE-HEATED TO 1625 F./1675 F., HELD 1/2 HR. PER INCH MIN. AND WATER QUENCHED, THEN TEMPERED 1220 F., HELD 1/2 HR. PER INCH MIN. AND WATER QUENCHED.

PLATES STRESS RELIEVED BY HEATING TO 1025 F./1075 F., HELD 1/2 HR. PER INCH MIN. AND AIR COOLED.

REFERENCE TEMPERATURE WAS NOT PERFORMED BY LUKENS'.

We hereby certify the above information is correct.

SUPERVISOR-TESTING F. Jr. Kline

MATERIAL TEST REPOI
Welding Products Division

TELEDYNE McKAY
P.O. Box 1509 • 850 Grantley Road • York, Pa. 17405

1-31-79

Harvey Co.
1055 Garden St.
Greensburg, PA
15601

Your Order No. 6440
Marked For

Our Order No. U 2559
Date Shipped N/A

Material Description and Specifications

Item	Weight, lb.	Size, in	Classification	Coating
1	240	3/16	E 308-16	AC-DC
2	240	3/16	E 309-16	AC-DC
3				
4				
5				
6				

Item	Heat No.	Lot No.	Specification
1	C-3260	2589686	AWS A5.4-69 ASME SFA 5.4
2	19944	2986601	AWS A5.4-69 ASME SFA 5.4
3			
4			
5			
6			

Typical Deposit Chemistry TYPICAL WELD METAL

Item	% C	% Mn	% P	% S	% Si	% Cr	% Ni	% Mo	%Cu	%V	%Cb+Ta	Ferrite
1	.06	1.80	.022	.015	.40	20.2	9.8	.10	.15			7.0 FN
2	.08	1.70	.022	.015	.40	24.2	13.0	.15	.11			7.5 FN
3												
4												
5												
6												

Typical Deposit Mechanical Properties TYPICAL WELD METAL

Item	Tensile, psi	Yield, psi	% Elong.	Charpy V-Notch Impact, ft.lb.
1	86,000	65,000	45	
2	90,000	70,000	35	
3				
4				
5				
6				

For Notarization

gtl

We hereby certify that the above product has been classified in accordance with the listed specifications and conforms to all applicable requirements thereof

TELEDYNE McKAY

GT Cole

MATERIAL TEST REPOR
Welding Products Division
Pittsburgh Warehouse

TELEDYNE McKAY
P O Box 1509 • 850 Grantley Road • York, Pa. 17405

Harvey Company
1055 Garden Street
Greensburg, PA 15601

Your Order No. -----
Marked For

Our Order No. -----
Date Shipped -----

Material Description and Specifications

Item	Weight, lb	Size, in	Classification	Coating
1	240	3/16	E308-16	AC-DC
2				
3				
4				
5				
6				

Item	Heat No	Lot No.	Specification
1	06804	2506511	AWS A5.4-78; ASME SFA5.4
2			
3			
4			
5			
6			

Typical Deposit Chemistry

Item	% C	% Mn	% P	% S	% Si	% Cr	% Ni	% Mo	%Cu	%V	%Cb+Ta	Ferrite	
1	.06	1.0	.022	.015	.40	20.2	9.6	.15	.10			7 FN	
2													
3													
4													
5													
6													

Typical Deposit Mechanical Properties

Item	Tensile, psi	Yield, psi	% Elong.	Charpy V-Notch Impact, ft.lb.	
1	86,000	65,000	45		
2					
3					
4					
5					
6					

For Notarization

We hereby certify that the above product has been classified in accordance with the listed specifications and conforms to all applicable requirements thereof.

TELEDYNE McKAY

Joseph Schimer Jr.

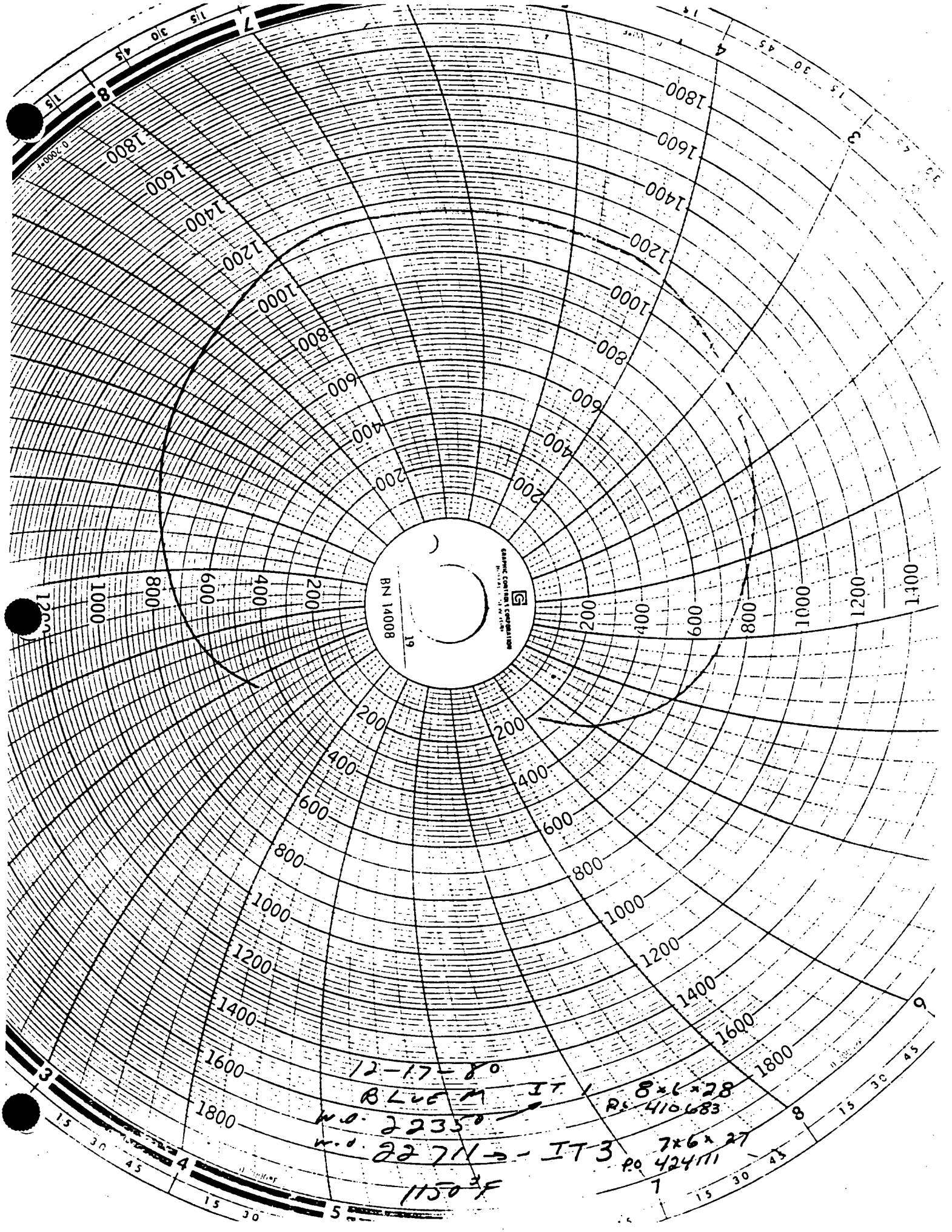
BN 14008
19
12-17-80
BLUE M IT 1
8x6x28
P.O. 410683
W.O. 22350
W.O. 22711 - IT 3
7x6x27
P.O. 424111
1150°F

WESTINGHOUSE–NUCLEAR ENERGY SYSTEM

SHOP ORDER

COMPANY

WMM 11906 FILMSORT®

INT-31

NEW YORK POWER AUTHORITY
INDIAN POINT NUCLEAR POWER PLANT
UNIT NO. 3
CALIBRATION BLOCKS

INDIAN POINT UNIT NO. 3 DESIGNATION	:	INT-32
COMPONENT/SYSTEM	:	STEAM GENERATOR CHANNEL HEAD TO TUBESHEET
SIZE/SCHEDULE	:	5.25"T X 18.375"L X 6.0"W
MATERIAL	:	SA508 CLASS 2 CARBON STEEL
HEAT OR IDENTITY NUMBER	:	B&W PIECE 1

ASME SECTION V AND XI 1983 EDITION THROUGH SUMMER 1983 ADDENDA REQUIREMENTS:

1. Section V : T-434
2. Material : SA216 Grade WCB Carbon Steel
3. Size/Schedule: 5.25"T x 16.0"L x 6.0"W

WESTINGHOUSE ELECTRIC CORPORATION - NSID - INSPECTION SERVICE DESIGN:

Calibration block was designed to meet intent of ASME Boiler and Pressure Vessel Code Section XI 1974 Edition through Summer 1975 Addenda.

RECOMMENDATION:

Calibration block to meet requirements of Section V and Section XI - 1983 Edition through Summer 1983 Addenda would require material of SA216 Grade WCB Carbon Steel (although P-Number grouping is equivalent with SA508 Class 2 Carbon Steel), and as required by Figure T-434 side drilled hole to be located 1.5" minimum from edge instead of 1.313", cladding to be 100% of width and length, and hole tolerances documented.

NOTES:
1. DRILL AND REAM 6 HOLES 3" MINIMUM DEEP.
2. CLAD MATERIAL 309 AND 308 STAINLESS STEEL.
3. CLAD DIRECTION TO BE PARALLEL TO HOLE AXIS.
4. CLADDING TO BE DONE MANUALLY.
5. HEAT TREAT BLOCK TO 1150°F ±25°. RATE OF HEATING ABOVE 600°F NOT TO EXCEED 100°F PER HOUR. HOLD FOR 2 HOURS. FURNACE COOL TO 600°F AT A RATE OF COOLING NOT TO EXCEED 100°F PER HOUR.

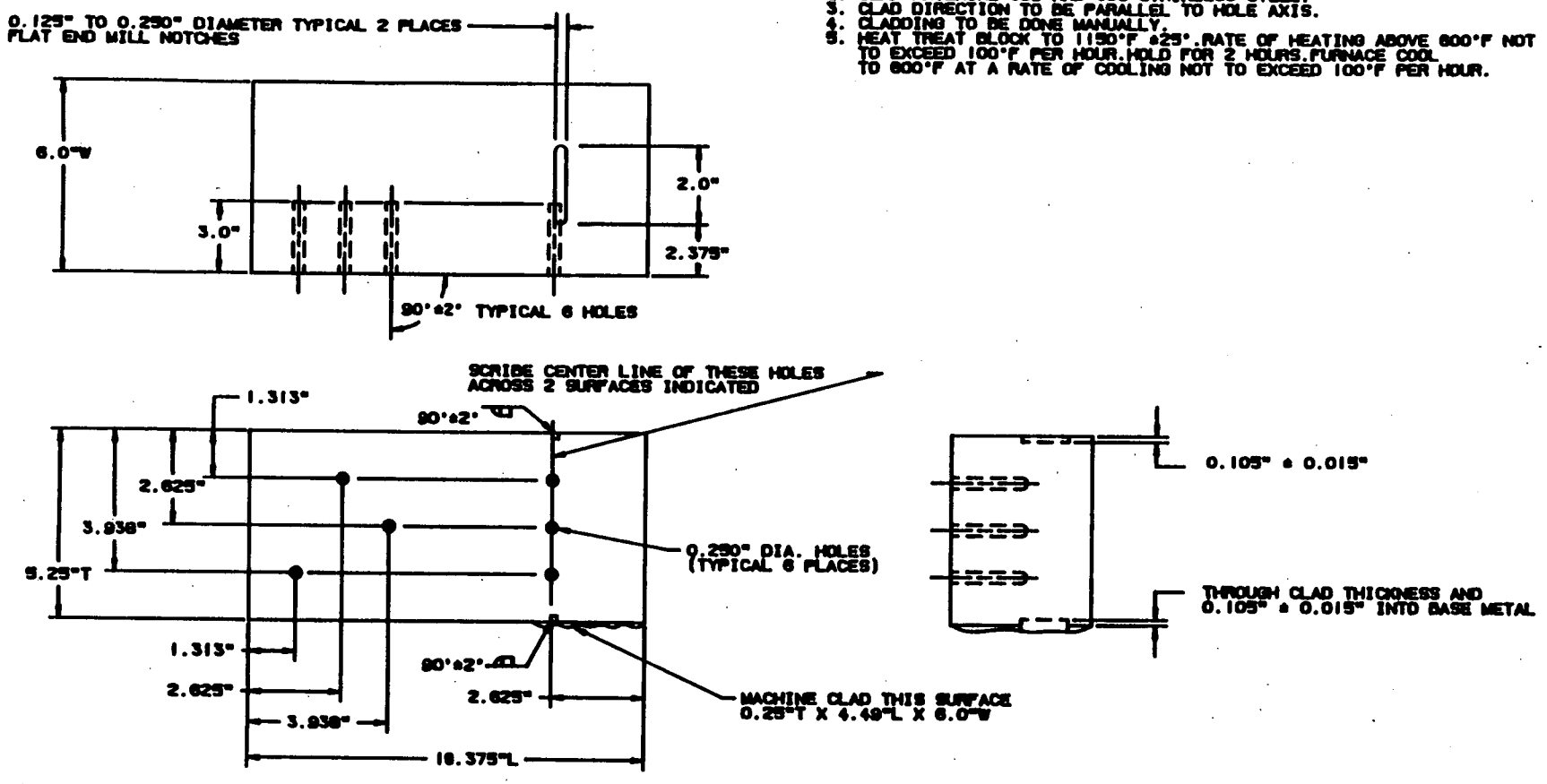

COMPUTER SYSTEM PLANT MODELING

NSSS TECHNICAL APPROVAL Philip C. Burkes	11-20-86	Westinghouse Electric Corporation PLANT ENGINEERING DIVISION - PITTSBURGH, PA
LEVEL III REVIEW David Funk	11-20-86	TITLE CALIBRATION BLOCK INT-32 STEAM GENERATOR CHANNEL HEAD TO TUBESHEET 5.25"T X 18.375"L X 6.0"W ASOB CLASS 2 CARBON STEEL IDENTITY NO.: B & W PIECE 1
ENG		
ENG		
MGR		C SZ. NO. REV.

REVISION | BY | DATE

NSD PA1011

Nuclear Service Division
SUPPLIER QUALITY RELEASE

① SUPPLIER _____ OR- S 1085

PURCHASE ORDER ①	PART NAME ①	DRAWING & REV. ②
544-MX6-410683-B	Calibration Block	W 001 Rev 4

PAR NO. ③	CHG. NOTICE NO. ③	P.O. ITEM NO. ③	QTY. ON ORDER ④	QTY. RELEASED ⑤
	000	IT 1 - IT2	4	2

PROJECT AND SHOP ORDER ①	E. SPEC. NO. ①	ORDER ⑤
	NA	COMPLETE ☒ YES ☐ NO

SERIAL OR IDENTIFICATION NOS. ⑥

IT 1 8 × 28 × 6 HT D8366-5

IT 2 5.25 × 18.375 × 6 HT R 1

The equipment shown hereon is released by our QC Department. Where indicated by a check mark (✓), records and data have been reviewed and approved. Records of objective edivence are on file and subject to Westinghouse Review. Non applicable items are lined out.

AUDIT CHECKLIST ⑦

☒	Material Certifications	☐	Non-Operating Electrical Tests
☒	Heat Treat Records	☐	~~Operating Electrical Test~~
☐	RT Film and Records	☐	Pressure Test
☐	PT/MT Records	☐	Seat Tightness Test
☒	Visual	☐	Performance Test
☒	Dimensional	☐	Cleanliness
☐	UT Records	☐	Packaging
☐	Personnel Qualification: Welding, NDT	☐	Code-Form
☐		☐	Painting
☐		☐	

DEVIATION NOTICES AND REMARKS (ALL DEVIATIONS HAVE BEEN APPROVED BY THE RESPONSIBLE WESTINGHOUSE ENGINEER UNLESS A SPECIFIC EXCEPTION IS STATED.) ⑧

WE CERTIFY THAT FOR THE EQUIPMENT AND MATERIAL RELEASED, ALL CONTRACTUAL REQUIREMENTS HAVE BEEN MET. APPROVED DEVIATIONS, IF ANY, ARE LISTED ABOVE.

⑨ SUPPLIER SIGNATURE _____ TITLE _____ DATE _____

SUPPLIER

Tooling Specialists, Inc.
Certification Letter of Compliance

To: (W) NES
PO Box 355
Pittsburgh Pa. 15230

Date: 2/25/81

Tooling Specialists, Inc. certifies that all purchase order requirements have been met for the following equipment and material. Any deviations from the order requirements have had Westinghouse NSD approval prior to shipment. Deviation Notice (D/N) numbers applicable are NA (N/A if not applicable).

Westinghouse Purchase Order Number 544-MXG-410683 - BN
P.O. Change Notice number(s) 00
Procurement Advisory Release (PAR) number(s) 00

P.O. Item #	Dwg. or Sketch and Rev. #	Base Mat'l & Heat #	Weld Joining Mat'l & Heat #	Cladding Mat'l and Heat #
001 1pc	W001 Rev 4	HT D8366-5	308	06804
			309	19944
002 1pc	W001 Rev 4	PC 1	308	306370
			309	19944

weld joining procedure used NA
(include revision #)
cladding procedure used NES-1001-H
(include revision #)
heat treating procedure used (W) NES
(include revision #)

One copy each of the following documents as required by the purchase order are attached to this letter. All (including letter) are included with this shipment.

- ✓ Westinghouse Quality Release
- ✓ Base material mill test report(s)
- ___ Weld operator certification
- ✓ Heat treat chart(s)
- ✓ Inspection Report
- ___ Weld joining material mill test report
- ✓ Cladding material mill test report
- ___ Other ___

One additional copy each of this letter and the above documents are hereby forwarded to the Westinghouse Buyer.

All records supporting this certification letter are available at Tooling Specialists.

Thomas D Shearer
(signature)

Tooling Specialists, Inc.

371

INSPECTION REPORT

Page 1 of 1

TOOLING SPECIALISTS, INC.
Latrobe, Pa. 15650
Phone: (412) 539-2534

Dwg. #	Revision	Item
W 001	4	
P. O. # 544-MXG-410683-BN	Work Order # 22350	

CUSTOMER: W NES

PART DESCRIPTION: (1) 5.25" X 18.375" X 6" Calibration Block INT-32

IF OUT OF TOLERANCE, PLACE X IN BOX TO RIGHT OF DIMENSION.

DRAWING DIMENSIONS	Part No.	X	Part No.	X	Part No.	X	Part No.	X	Part No.	X	Part No.	X
"T"	5.254"											
T/4 from Top To holes	1.313											
T/2 From Bottom to Holes	2.625											
T/4 From Bottom to Holes	1.313											
T/4 From Left side To Hole	1.313											
T/2 From Left Side To Hole	2.626											
3/4 T From Left Side To Hole	3.940											
T/2 From Right Side To Holes	2.626											
Clad X Area	4.487											
3.5 T	18.380											
3" To Notches	3.00"											
2" Length of Notches	2.00"											
(6) 1/4 Drilled & Reamed Holes	1/4"											
(6) 3" Deep	3.06"											
(2) 1/4" Dia Flat end mill Holes	1/4"											
2% T Deep	.105"											
Through clad Thickness 2% Deep into base metal	.105"											
Scribe of notches & holes opposite side of cladding	OK											
"T" or "6" Min	6.002"											

INSPECTOR: Donald J. Jones 1-14-81

RECEIVING INSPECTOR:

2172 (Rev.C 6-70)

BETHLEHEM STEEL CORPORATION
Bethlehem
PLANT—METALLURGICAL DEPARTMENT

PC #1, #2, #3, #4

REPORT OF TESTS

REPORT No. [redacted]

PURCHASER Babcock and Wilcox Co., (Barberton, Ohio)

July 15th 19 75

Purchaser's Requisition	Date	Description [redacted]	B.S.C. Order
[redacted]	11/2/73	One (1) Nozzle Belt Forging- Item 1	[redacted]
[redacted]		Drawing: [redacted]	

REQUIREMENTS

C	Mn	P	S	Si	Ni	Cr	V	Mo

ASTM A508 Class 2 ---- B & W Spec. CE-NPS-004 Rev.2 (8/17/72)
ASME Code Section III (1971) Edition Para. NB2000 and All Addenda thru Winter, 1972

Y.S. (.2%)	Tensile	Elong.	Red.	V-N-C	V-N-C
Tangential 50000	80000	18.0	38.0	Broken @ +40°F 30 ft.lbs.avg	@ +100°F 50 ft.lbs.min 35 mils L.E.

CHEMICAL COMPOSITION

Heat No.	C	Mn	P	S	Si	Ni	Cr	V	Mo	Cu
[redacted]	.23	.60	.008	.009	.30	.73	.36	/.01	.58	.05

Electric Furnace - Vacuum Degassed

TEST RESULTS

Identification No.	Specimen size	Y.S. (.2%)	Tensile	Elong.	Red.
[redacted] T12	.505x2"	64000	85000	27.5	69.2
" T6	"	66500	85000	27.5	69.2

1 test coupons were stress relieved up (100° Max. per hour) to 1125°F., held for 50 hours Furnace Cooled 100° Max per hour to below 600°F

Heat Treatment

[redacted]

1575°F., held for 12 hours - Water Quenched
1230°F., held for 16 hours - Air Cooled

Magnetic Particle Inspection was performed in accordance with and met the acceptance requirements [redacted].

Ultrasonic Inspection was performed in accordance with and met the acceptance requirements [redacted]

Test Drawing: [redacted]

[redacted]

V-Notch Charpys Broken @ + 40°F	Ft.Lbs.	%Fibrous	L.E.
T12	110	65	.071
T12	100	60	.064
T12	118	65	.073
T6	80	48	.054
T6	82	55	.057
T6	100	52	.071

I CERTIFY THE ABOVE RESULTS TO BE CORRECT AS CONTAINED IN THE RECORDS OF THE COMPANY.

REMARKS— The major working direction was circumferential during forging.

E.A.REID
CHIEF METALLURGIST
For G Wolbrock

TEST REPORT APPROVED BY MT. VERNON
MATERIALS ENGINEERING [illegible] 9-2-75

2177 (Rev.C 6-70)

BETHLEHEM STEEL CORPORATION

Bethlehem PLANT—METALLURGICAL DEPARTMENT

REPORT OF TESTS

REPORT No. [redacted]

PURCHASER Babcock and Wilcox Co., (Barberton, Ohio)

August 21 1975

Purchaser's Requisition	Date	Description	B.S.C. Order
[redacted]	11/2/73	Nozzle Belt Forging	[redacted]

REQUIREMENTS

C	Mn	P	S	Si	Ni	Cr	V	Mo				

	Tensile	Elong.	Red.			

Check Analyses

CHEMICAL COMPOSITION

Heat No.	C	Mn	P	S	Si	Ni	Cr	V	Mo	Co	Cb
[redacted] TI12	.22	.63	.009	.009	.31	.70	.36	/.01	.61	.01	/.01
" TI6	.22	.63	.009	.009	.30	.70	.35	/.01	.60	.01	/.01
	Cu	Sn	Al	As	Boron	Pb	N	Ti	Zr	W	
TI12	.06	/.01	.07	.007	/.001	Nil	.010	.004	/.01	/.01	
TI6	.06	/.01	.07	.007	/.001	Nil	.014	.004	/.01	/.01	

TEST RESULTS

Identification No.	Specimen size		Tensile	Elong.	Red.			
			NDTT = Minus 10°F					
		C- V- N Broken At + 50°F = (NDT Plus 60°)						
			Ft.Lbs.	% Fibrous	L.E.			
		LO12	109	60	.069			
		LO12	114	70	.074			
		LO12	113	70	.070			
		LO6	157	100	.084			
		LO6	94	60	.061			
		LO6	90	57	.064			
		RT NDT = - 10°F						

I CERTIFY THE ABOVE RESULTS TO BE CORRECT AS CONTAINED IN THE RECORDS OF THE COMPANY.

REMARKS:— This revision issued to:

1. Add Cb content
2. Change N_2 to N
3. Include the RT NDT
4. Append Drop Weight Temp at 1/4T x T and 3/4" x T.

E.A.Reid
CHIEF METALLURGIST
By E.A.Reid

TEST REPORT APPROVED BY MT. VERNON
MATERIALS ENGINEERING 9-2-75

2172 (Rev.C 6-70)

BETHLEHEM STEEL CORPORATION

Bethlehem PLANT—METALLURGICAL DEPARTMENT

REPORT OF TESTS

REPORT NO. [redacted]

PURCHASER Babcock and Wilcox Co

July 15th 19 75

Purchaser's Requisition	Date	Description	B.S.C. Order
[redacted]	11/2/73	Nozzle Belt Forging	[redacted]

REQUIREMENTS

C	Mn	P	S	Si	Ni	Cr	V	Mo				

	Tensile	Elong.	Red.			
	Information	Tangential Tensiles				

CHEMICAL COMPOSITION

Heat No.	C	Mn	P	S	Si	Ni	Cr	V	Mo
		"Taken 180° Apart at the 3/4" XT Test Depth"							

TEST RESULTS

Identification No.	Specimen size	Y.S. (.2%)	Tensile	Elong.	Red.
[redacted] T012	.505x2"	69000	87000	27.5	71.6
" T06	"	66000	87500	28.5	71.6

I CERTIFY THE ABOVE RESULTS TO BE CORRECT AS CONTAINED IN THE RECORDS OF THE COMPANY.

REMARKS:—

E.A.Reid
CHIEF METALLURGIST
By G Wolmold

TEST REPORT APPROVED BY MT. VERNON
MATERIALS ENGINEERING 9-2-75

:1175 (10-68)

BETHLEHEM STEEL CORPORATION
REPORT OF TRANSITION TEMPERATURE SURVEY

Report No. [redacted]

July 15 19 75

CUSTOMER
Babcock and Wilcox Co.,

CUSTOMER ORDER NO.
[redacted]

BSC ORDER NO.
[redacted]

TYPE FORGING
Nozzle Belt ------ [redacted]

I.S.T.T. =

CODE	TEMP.	FT. LBS.	FT. LBS. AVERAGE	% FIBROUS	LATERAL EXPANSION	CODE	TEMP.	FT. LBS.	FT. LBS. AVERAGE	% FIBROUS	LATERAL EXPANSION
I16	-40°F	6		6	.007						
		5		6	.004						
		7	6	6	.005						
	0°F	15		11	.013						
		15		16	.016						
		17	16	21	.014						
	+40°F	69		38	.050						
		76		48	.055						
		65	70	38	.047						
	+80°F	128		84	.080						
		166		100	.077						
		112	135	72	.0[illegible]						
	+120°F	155		100	.092						
		119		74	.08[illegible]						
		132	135	80	.081						
	+160°F	129		88	.07[illegible]						
		164		100	.083						
		138	164	88	.08[illegible]						

TRANSITION CURVE ATTACHED. TEST [illegible] APPROVED BY MT. VERNON MATERIALS ENGINEERING [illegible] 9-2-75

BETHLEHEM STEEL CORPORATION
REPORT OF TRANSITION TEMPERATURE SURVEY

Report No. [redacted]

July 15th 1975

CUSTOMER: Babcock and Wilcox Co.

CUSTOMER ORDER NO.: [redacted]

BSC ORDER NO.: [redacted]

TYPE FORGING: Nozzle Belt - [redacted]

I.S.T.T. =

CODE	TEMP.	FT. LBS.	FT. LBS. AVERAGE	% FIBROUS	LATERAL EXPANSION	CODE	TEMP.	FT. LBS.	FT. LBS. AVERAGE	% FIBROUS	LATERAL EXPANSION
-112	-40°F	5		6	.004						
		10		6	.012						
		7	7	11	.007			Avg. L.E.T.T. = .008			
	0°F	32		27	.027						
		28		27	.026						
		40	33	33	.035			Avg. L.E.T.T. = .029			
	+ 40°F	59		33	.046						
		69		42	.052						
		70	66	42	.052			Avg. L.E.T.T. = .050			
	+ 80°F	123		76	.073						
		110		69	.079						
		115	116	82	.078			Avg. L.E.T.T. = .077			
	+120°F	127		87	.084						
		121		81	.088						
		125	124	80	.087			Avg. L.E.T.T. = .086			
	+160°F	146		100	.090						
		130		94	.085						
		127	134	94	.084			Avg. L.E.T.T. = .086			
	I.S.T.T. = + 20°F							L.E.T.T. = + 10°F			

MATERIALS ENGINEERING BY MT. VERNON

9-2-75

TRANSITION CURVE ATTACHED.

BSC ORDER NO. [redacted] FORGING NO. [redacted] BAR IDENT. TI6

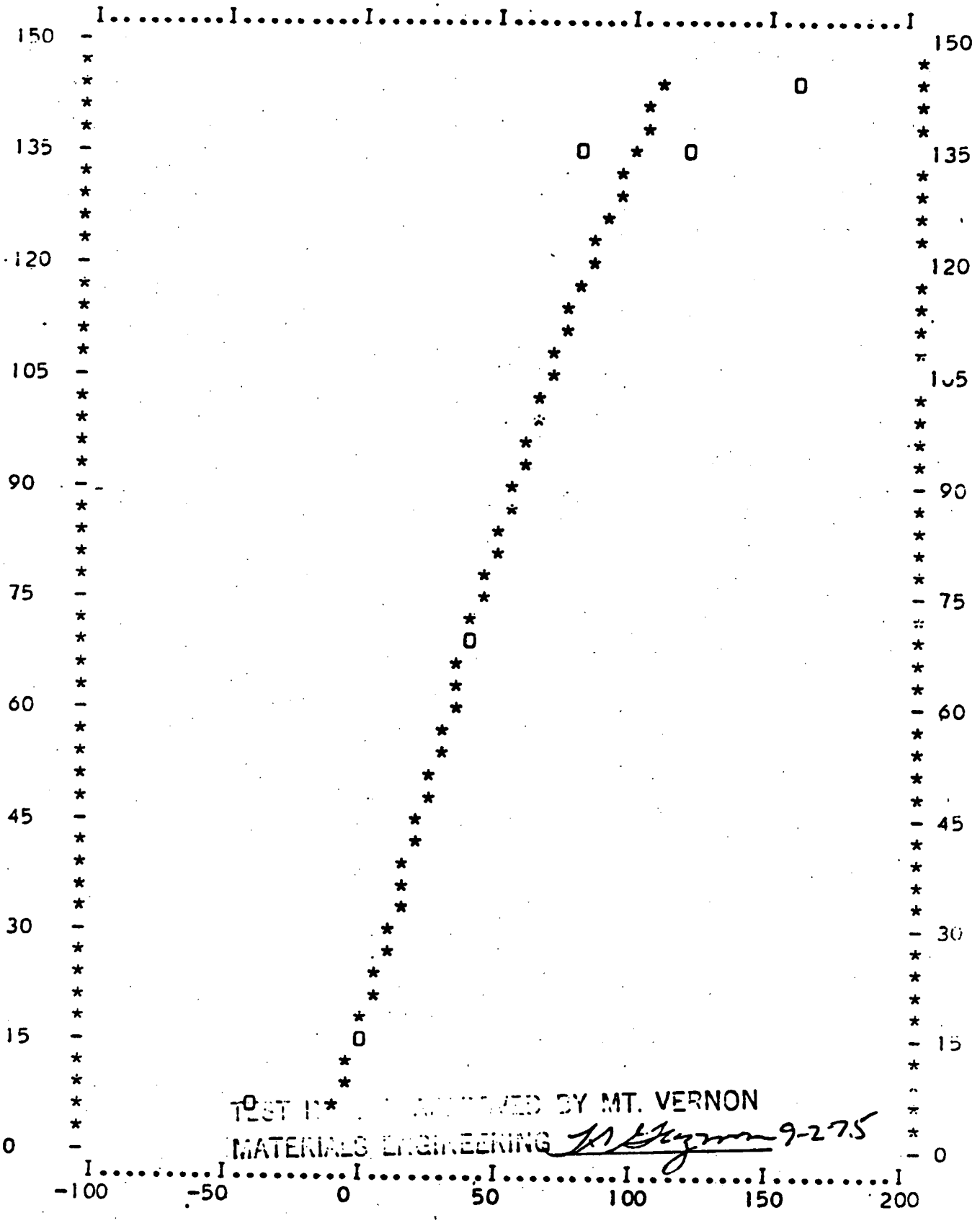

TEST [illegible] [illegible] BY MT. VERNON
MATERIALS ENGINEERING [illegible] 9-27-5

VERTICAL SCALE=IMPACT STRENGTH-FT.LBS.; HORIZONTAL SCALE=TEMP DEG-F
CODE: O=OBSERVED DATA; *=CALCULATED DATA

ISTT 50 = 25 DEG. F.

BTI

BSC ORDER NO. [redacted] FORGING NO. [redacted] BAR IDENT. LT 12

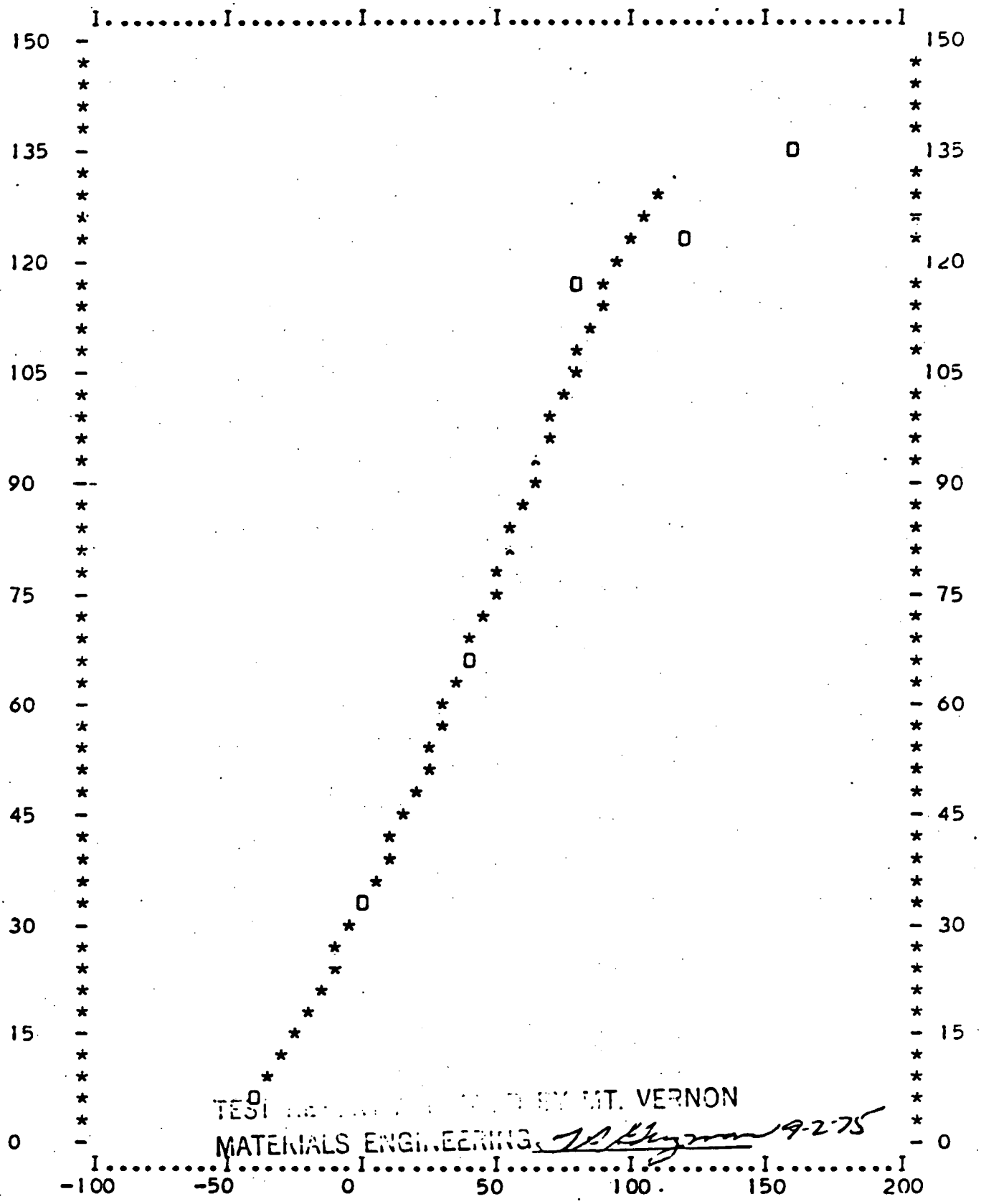

TEST [illegible] BY MT. VERNON
MATERIALS ENGINEERING [illegible] 9-2-75

VERTICAL SCALE=IMPACT STRENGTH-FT.LBS.; HORIZONTAL SCALE=TEMP DEG-F
CODE: O=OBSERVED DATA; *=CALCULATED DATA

ISTT 50 = 20 DEG. F.

BSC ORDER NO. [redacted] FORGING NO. [redacted] BAR IDENT. LT 12

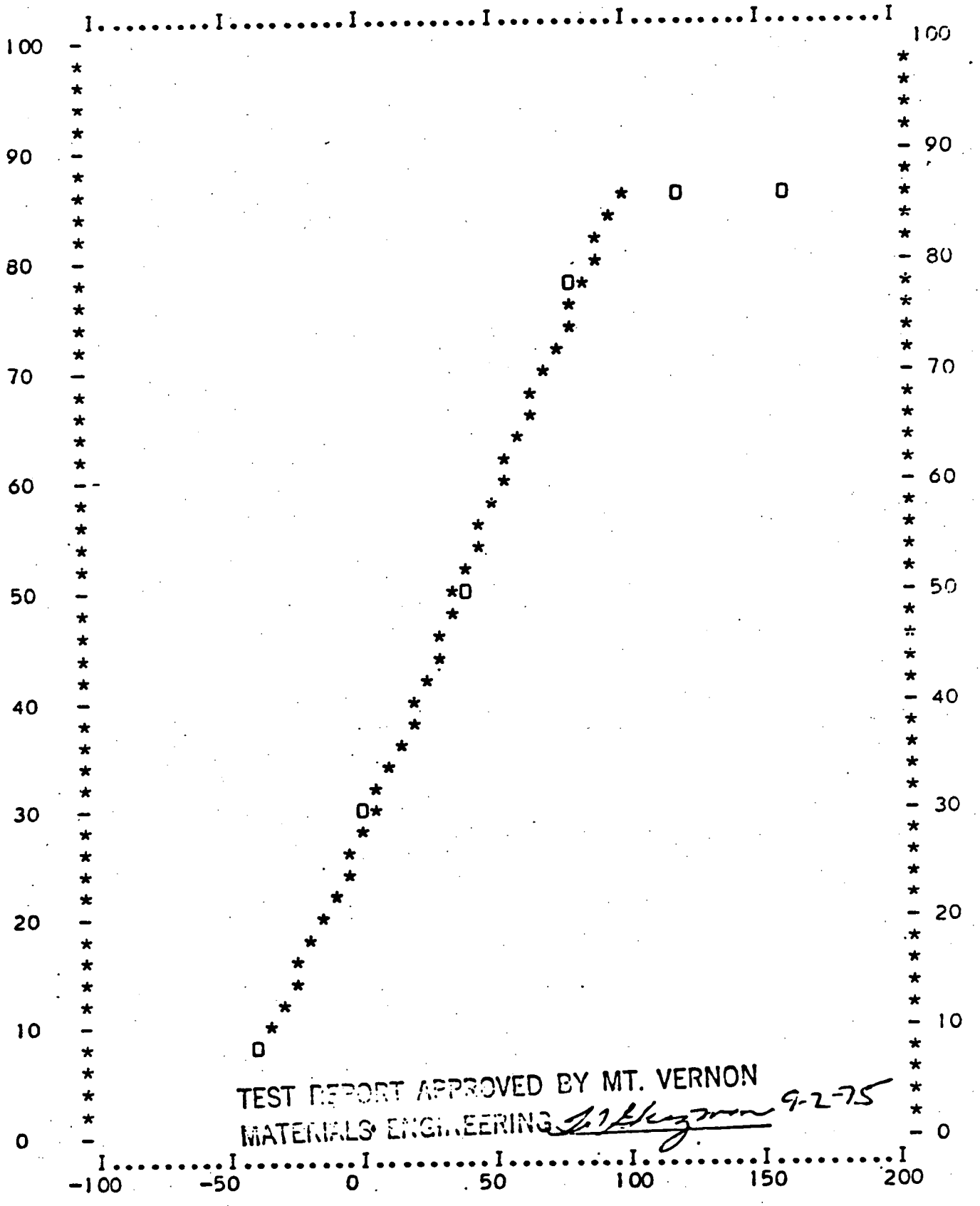

TEST REPORT APPROVED BY MT. VERNON
MATERIALS ENGINEERING 9-2-75

VERTICAL SCALE=LATERAL EXP.-MILS;HORIZONTAL SCALE=TEMP DEG-F
CODE: O=OBSERVED DATA; *=CALCULATED DATA

LETT 35 = 10 DEG-F

A-71

BETHLEHEM STEEL CORPORATION
PHYSICAL LABORATORY
30345 (3-47)

DATE June 11, 1975

NDT DROP WEIGHT TEST

WEIGHT	100#	SPECIMEN SIZE	5/8"
DROP	3'	SPECIMEN TYPE	P3
NB = NO BREAK	B = BREAK	NDT TESTS PER ASTM E208-66T	

Babcock & Wilcox Nozzle Belt

HEAT NO.	[redacted]				
CHARGE	[redacted]				
TEST TEMP. °F	SPECIMEN CODE TEST RESULT	TEST TEMP. °F	SPECIMEN CODE TEST RESULT	TEST TEMP. °F	SPECIMEN CODE TEST RESULT
		Test Depth	1/4T x T		
+20	T12 NB T6 NB				
+10	T6 B				
0	T12 B T6 NB				
-10	T12 B T6 NB				
-20	T12 B				
NDT	TEST RESULT APPROVED BY MT. VERNON +10°F [illegible]		[illegible] 9-2-75		

I certify the above results to be correct as contained in the records of the company.

E. A. Reid, Chief Metallurgist

Per R.T. Hughes
R.T.H. 6/12

121

BETHLEHEM STEEL CORPORATION
PHYSICAL LABORATORY
39343 (3-67)

DATE May 23, 1975

NDT DROP WEIGHT TEST

WEIGHT	100#	SPECIMEN SIZE	5/8"
DROP	3'	SPECIMEN TYPE	P3
NB = NO BREAK	B = BREAK	NDT TESTS PER ASTM E208-66T	

Bars temp up 100° 1 hr max to 1125°F hold 50 hrs. F.C. 100° hr to below 600°F

HEAT NO.	[redacted]	Nozzle Belt			
CHARGE	[redacted]				
TEST TEMP. °F	SPECIMEN CODE TEST RESULT	TEST TEMP. °F	SPECIMEN CODE TEST RESULT	TEST TEMP. °F	SPECIMEN CODE TEST RESULT
		Test Depth	3/4" x T		
+20°F	T12 NB				
0°F	T6 NB T12 NB				
-10°F	T6 NB T12 B				
-20°F	T6 B				
NDT	-10°F				

TEST REPORT APPROVED BY MT. VERNON MATERIALS ENGINEERING

I certify the above results to be correct as contained in the records of the company.

E. A. Reid, Chief Metallurgist

9-2-75

Per ... 5/26/

Bethlehem Steel Corporation

BETHLEHEM PLANT
BETHLEHEM, PA. 18016

February 6, 1975

Babcock and Wilcox Co.
Nuclear Equipment Procurement
P.O. Box 351
Sterling Avenue
Barberton, Ohio 44203

Attn: Mr. Somodi

B.S.Corp.Order [redacted]

The following is the ultrasonic test on a nozzle belt forging [redacted] on your order [redacted], with information as requested:

A - Instrumentation type and make of instrument, type, size and frequency of search units.

(1) Sperry UR Mod.
(2) 2¼ Mhz. Aerotech 1" Ø transducer. Straight Beam.
(a) 1 Mhz. 45° angle transducer. Shear Wave.

B - Listing of test results including pertinent sketches.

(1) No reportable indications. (Preliminary Test)

C - Applicable specifications.

(1) Procedure [redacted]

D - Names of ultrasonic operators.

(1) Thomas Trexler
(2) Chris Patelis

The sonic test on the above forging was witnessed by cust's representative Mr. Hugus on January 30, 1975.

BETHLEHEM STEEL CORPORATION

R. P. Morrison
Metallurgical Supervisor

Per: T. A. Thomas

TCT/sh

cc: EAR) HCS)1 GSH) FTB File

TEST REPORT APPROVED BY MT. VERNON
MATERIALS ENGINEERING 9-2-75

Bethlehem Steel Corporation

BETHLEHEM PLANT
BETHLEHEM, PA. 18016

July 15, 1975

Babcock and Wilcox Co.
Nuclear Equipment Procurement
P.O. Box 351
Sterling Avenue
Barberton, Ohio 44203

Attn: Mr. Somodi

B.S.Corp.Order [redacted]

The following is the ultrasonic test on a nozzle belt forging [redacted] on your order [redacted], with information as requested:

A - Instrumentation type and make of instrument, type, size and frequency of search units.

(1) Sperry UR Mod.
(2) 2½ Mhz. Pan. 1"Ø transducer. Straight Beam.
(3) 1 Mhz. 45° (½x1") angle transducer. Shear Wave.

B - Listing of test results including pertinent sketches.

(1) No reportable indications. (Final Test)

C - Applicable specifications.

(1) Procedure [redacted]

D - Names of ultrasonic operators.

(1) Thomas Trexler.
(2) Chris Patelis.

The sonic test on the above forging was witnessed by cust's representative Mr. Sansalone on July 11, 1975.

BETHLEHEM STEEL CORPORATION

R. P. Morrison
Metallurgical Supervisor

Per: T. C. Thomas Jr.

TCT/sh

cc: EAR). HCS)1 GSH) FTB File

TEST REPORT APPROVED BY MT. VERNON
MATERIALS ENGINEERING [illegible] 9-2-75

2172 (Rev.C 6-70)

BETHLEHEM STEEL CORPORATION

Bethlehem PLANT—METALLURGICAL DEPARTMENT

[redacted]

REPORT OF TESTS

Supplement #1

REPORT No. [redacted]

PURCHASER Babcock and Wilcox Co.

9/18 1975

Purchaser's Requisition	Date	Description	B.S.C. Order
[redacted]	11/2/73	Nozzle Belt Forging	[redacted]

REQUIREMENTS

C	Mn	P	S	Si	Ni	Cr	V	Mo				

	Tensile	Elong.	Red.			

CHEMICAL COMPOSITION

Heat No.	C	Mn	P	S	Si	Ni	Cr	V	Mo

TEST RESULTS

Identification No.	Specimen size		Tensile	Elong.	Red.			
[redacted]		Grain Size Per ASTM E112 is 100% 6-8						

I CERTIFY THE ABOVE RESULTS TO BE CORRECT AS CONTAINED IN THE RECORDS OF THE COMPANY.

REMARKS— This sheet issued as a supplement to Test Report [redacted]

E.A.REID
CHIEF METALLURGIST

Per [signature]

TEST REPORT APPROVED BY MT. VERNON MATERIALS ENGINEERING [signature] 9-25-75

THE BABCOCK & WILCOX COMPANY - MT. VERNON WORKS

CERTIFICATE OF TEST

-339-H

CUSTOMER: [redacted] P.O. # CUSTOMER ORDER NO.: [redacted] DATE: 11-1-77

JOB NO.: [redacted] COMPONENT: Nozzle Belt SPECIFICATION: SA508 C12

PART NO.: 24-1 SERIAL NUMBER: [redacted] THICKNESS: 11 3/4 "

Heat Number	C	Mn	P	S	Si	Cr	Ni	Mo	Cu	Co	Al	V	Fe	Nb	Sn
Ladle Check															

Specimen Code	Heat Number	Test Depth	Drop Weight - E208				Charpy V-Notch Impact Test -240 ft-lbs.					
			Orientation	Test Temp.	Results	TNDT	Orientation	Test Temp. °F	Ft. Lb.	Lateral Expansion	% Shear	RT NDT
	[redacted]						See Attachments					

Code	Heat Number	Test Depth	Orien-tation	Tensile Strength PSI	Yield Strength PSI	% Elong in 2 in	Reduction Of Area %	Bend Test	Macro	Grain Size

TEST REPORT APPROVED BY MT. VERNON MATERIALS ENGINEERING [signature] 11-16-77

Heat Treatment:

Stress Relief: (Samples)

NOV 3 1977

R. FEARING

I hereby certify that the above results are correct as contained in the records of the company.

[signature]

Test Engineer

TRANSITION CURVE--CHARPY V-NOTCH

CONTRACT [redacted]

DATE 11-1-77

CUSTOMER [redacted]

COMPONENT Nozzle Belt

SERIAL NO. [redacted]

HEAT NO. [redacted]

CODE IDENTITY [redacted]

TEST LOCATION 1/4 TxT: Axial

TEMP. (°F)	FT. LBS.			LATERAL EXPANSION Mls			% SHEAR		
+ 300	122	124	126	81	81	77	100	100	100
+ 200	131	128	127	82	77	77	100	100	100
+ 150	112	122	111	66	71	74	85	90	85
+ 100	100	80	107	71	51	76	75	65	80
+ 70	74	44	54	50	32	39	35	25	35
+ 40	38	40	38	23	28	28	20	20	20
+ 10	46	26	11	32	20	11	20	15	10
- 20	31	9	9	22	5	5	10	5	5
- 50	7	4	5	3	2	2	0	0	0

TEST REPORT APPROVED BY MT. VERNON MATERIALS ENGINEERING
NOV 3 1977
R. FEARING

TESTED BY E. E. Nobles

TRANSITION CURVE--CHARPY V-NOTCH

CONTRACT [redacted]

DATE 11-1-77

CUSTOMER [redacted]

COMPONENT Nozzle Belt

SERIAL NO. [redacted]

HEAT NO. [redacted]

CODE IDENTITY [redacted]

TEST LOCATION 1/4 TxT Tangential

TEMP. (°F)	FT. LBS.			LATERAL Mls EXPANSION			% SHEAR		
+ 300	135	138	136	83	80	81	100	100	100
+ 200	136	134	135	82	78	80	100	100	100
+ 150	118	116	120	70	80	71	85	85	85
+ 100	102	88	84	69	55	55	80	65	65
+ 70	57	59	87	40	41	60	30	30	60
+ 40	42	65	39	29	44	27	20	35	20
+ 10	23	29	34	16	25	26	10	15	20
- 20	19	8	12	13	3	6	10	5	5
- 50	6			2			0		

TEST REPORT APPROVED BY MATERIALS ENGINEERING
NOV 3 1977
R. FEARING

1

TESTED BY L. E. Nobles

TRANSITION CURVE--CHARPY V-NOTCH

CONTRACT [redacted]

DATE 11-1-77

CUSTOMER [redacted]

COMPONENT Nozzle Belt

SERIAL NO. [redacted]

HEAT NO. [redacted]

CODE IDENTITY [redacted]

TEST LOCATION 1/4 TxT Axial

TEMP. (°F)	FT. LBS.			Mls LATERAL EXPANSION			% SHEAR		
+ 300	139	139	137	73	79	77	100	100	100
+ 200	137	142	141	81	70	78	100	100	100
+ 150	140	134	127	83	82	72	100	90	85
+ 100	104	92	88	59	56	57	70	65	65
+ 70	82	70	73	55	46	49	60	40	40
+ 40	41	45	53	29	32	38	40	35	40
+ 10	20	23	22	13	18	16	15	15	15
- 20	9	9	8	4	4	3	5	10	5
- 50	8	5	8	3	2	4	0	0	0

NOV 3 1977
R. FARRING

TESTED BY E. E. Noble

329

TRANSITION CURVE--CHARPY V-NOTCH

CONTRACT [redacted]

DATE 11-1-77

CUSTOMER [redacted]

COMPONENT Nozzle Belt

SERIAL NO. [redacted]

HEAT NO. [redacted]

CODE IDENTITY [redacted]

TEST LOCATION 1/4 TxT Tangential

TEMP. (°F)	FT. LBS.			Mls LATERAL EXPANSION			% SHEAR		
+ 300	151	146	160	76	77	78	100	100	100
+ 200	155	159	163	84	82	74	100	100	100
+ 150	147	146	135	76	86	78	100	100	90
+ 100	104	132	130	64	77	71	75	90	85
+ 70	74	62	99	48	40	54	45	50	55
+ 40	69	50	64	42	34	40	45	35	40
+ 10	17	40	18	16	25	13	15	20	15
- 20	12	13	9	9	8	4	5	5	5
- 50	7	6	7	3	3	3	0	0	0
		NOV 3 1977							
		R. FEARING							

TESTED BY R.E. Nobles

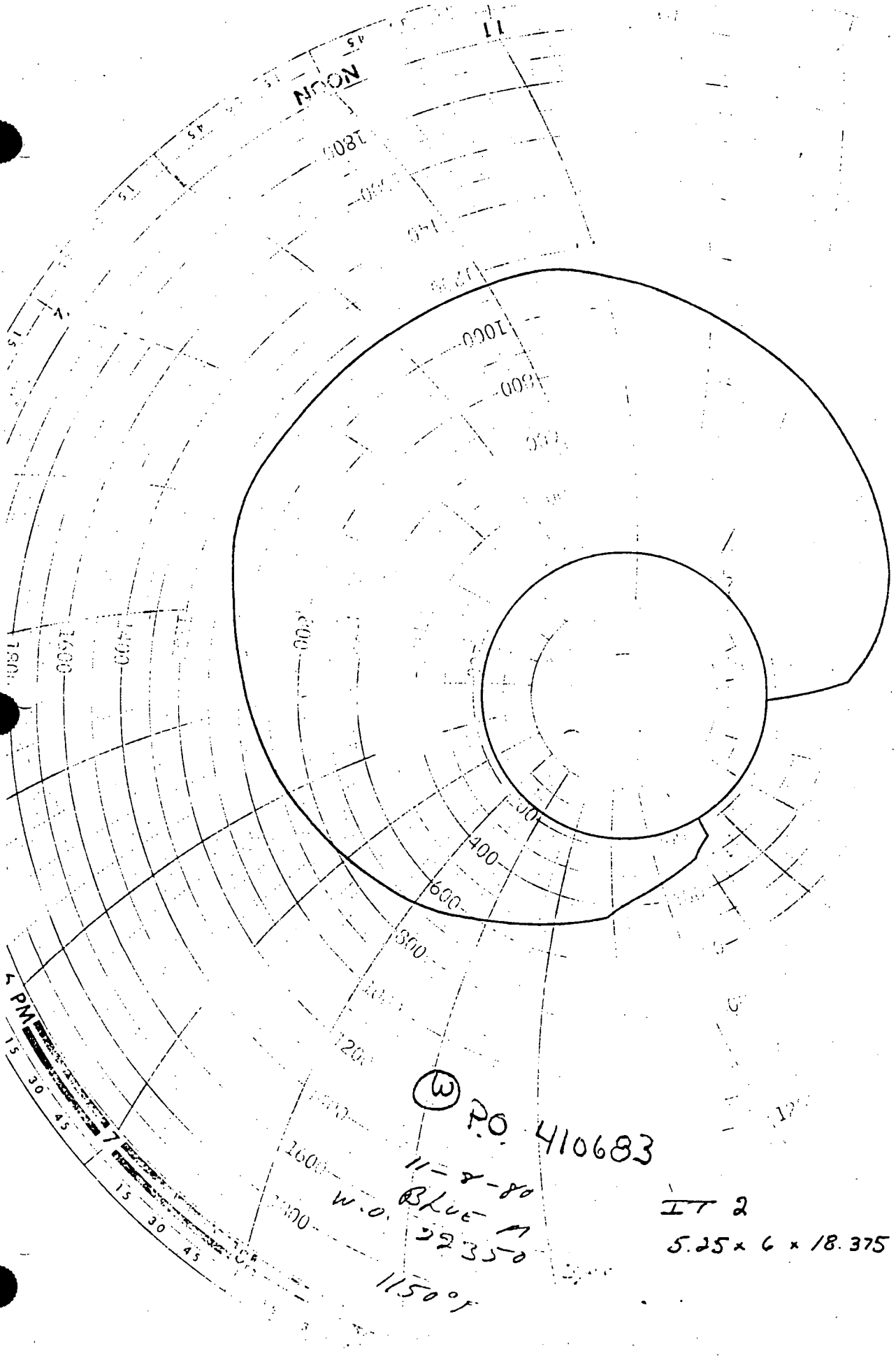

(W) P.O. 410683

11-8-80

W.O. Blue M

32350

1150°F

IT 2

5.25 x 6 x 18.375

NEW YORK POWER AUTHORITY
INDIAN POINT NUCLEAR POWER PLANT
UNIT NO. 3
CALIBRATION BLOCKS

INDIAN POINT UNIT NO. 3 DESIGNATION	:	INT-40
COMPONENT/SYSTEM	:	4" SCH 120 PRESSURIZER SPRAY PIPING
SIZE/SCHEDULE	:	4" SCH 120 .438"T
MATERIAL	:	A376 TP316 STAINLESS STEEL
HEAT OR IDENTITY NUMBER	:	M6108

ASME SECTION V AND XI 1983 EDITION THROUGH SUMMER 1983 ADDENDA REQUIREMENTS:

1. Section V : T-110 and T-548
2. Section XI : Article III-1100, Supplement 7 and IMA-2250
3. Material : A376 TP316 Stainless Steel
4. Size/Schedule: 4" SCH 120 .438"T

WESTINGHOUSE ELECTRIC CORPORATION - NSID - INSPECTION SERVICE DESIGN:

Calibration block was designed to meet intent of ASME Boiler and Pressure Vessel Code Section XI 1974 Edition through Summer 1975 Addenda.

RECOMMENDATION:

Calibration block design follows the guidelines of Section V and Section XI - 1983 Edition through Summer 1983 Addenda for Austenitic Piping. Modifications of this design to meet the requirements of Section V and XI-1983 Edition through Summer 1983 Addenda for calibration blocks for "Ferritic Piping and Design T-547.1" would be to increase length to 8" and arc length to 270° and as required by Table III-3430-1 notch depth to 0.104T - 0.009T squared with tolerance of +10% - 20%.

NOTES:

1. WHEN MEASURED FROM EITHER SIDE OF CENTERLINE MINIMUM LENGTH AT BOTTOM OF AXIAL NOTCHES TO BE 0.5" AS SHOWN IN SIDE VIEW.
2. NOTCH DEPTH 10% OF MEASURED THICKNESS +0.005" - 0.010".
3. PREP ALLOWED IN AREA OF SIDE DRILLED HOLE SHALL NOT INFRINGE ON HOLE SIZE REQUIREMENTS.
4. CIRCUMFERENTIAL HOLES AND NOTCHES TO BE PLUS OR MINUS 0.1" FROM ENDS.
5. LOCATE AXIAL NOTCHES SO AS NOT TO IMPOSE ON END OF HOLES OR ON END OF NOTCHES AT CENTERLINE.
6. FLAT SIDE OF NOTCHES TO BE PERPENDICULAR NOTCHED SURFACES, WITHIN 2°.
7. HOLE LOCATION TO BE BASED ON ACTUAL "T".
8. SIDE DRILLED HOLE DIAMETER TOLERANCE TO BE WITHIN ± 0.03"
9. DRILL HOLES PERPENDICULAR TO RADIUS.
10. ARC DIMENSION +360° AND - 0.080".
11. LENGTH TOLERANCE TO BE +2.00" - 0.25"

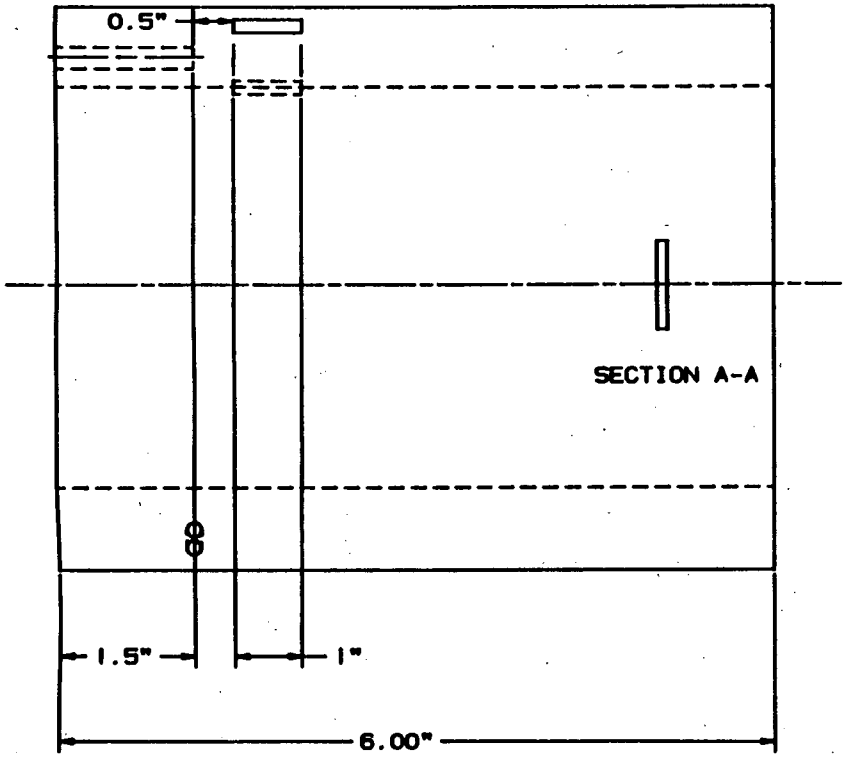

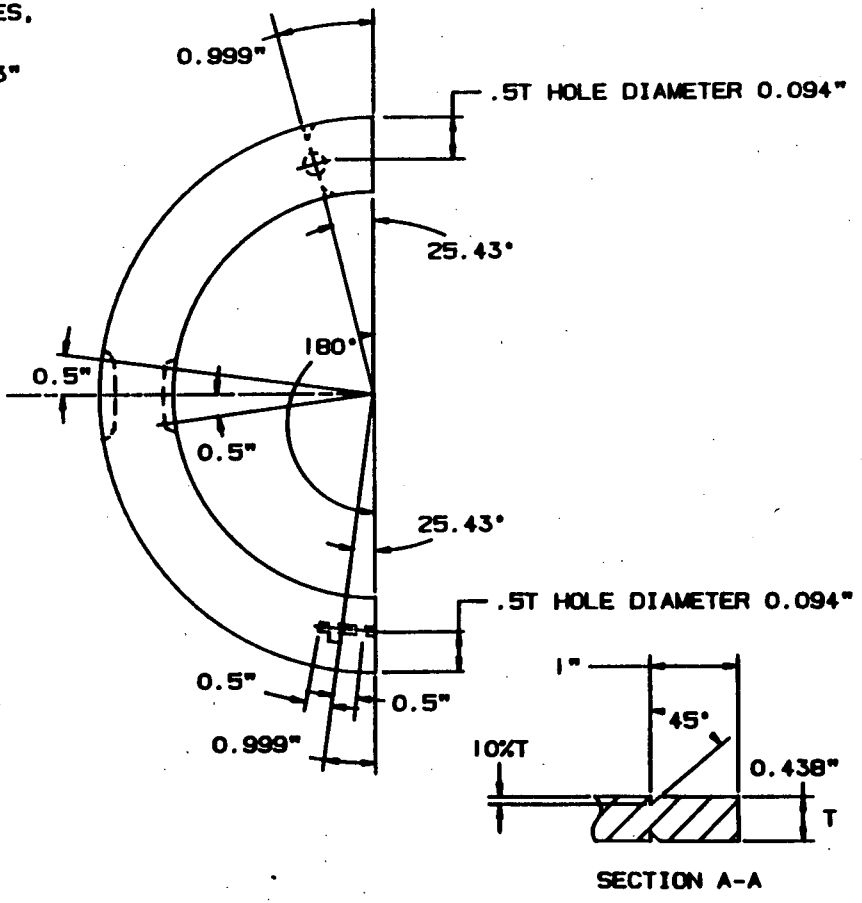

COMPUTER SYSTEM PLANT MODELING

NSSD TECHNICAL APPROVAL Phillip C. Burkes	11-20-86	Westinghouse Electric Corporation PLANT ENGINEERING DIVISION - PITTSBURGH, PA
LEVEL III REVIEW David Kunell	11-20-86	TITLE CALIBRATION BLOCK INT-40 4" SCH 120 PRESSURIZER SPRAY PIPING 4" SCH 120 .438"T-A A376 TP316 STAINLESS STEEL HEAT NO.: M6108
ENG		
ENG		
MGR		SIZE C DR. NO. REV.

REVISION

B. D. IT.

NSD PA1010

Nuclear Service Division
QUALITY RELEASE

QR- 2025 REV. 0

PURCHASE ORDER	PART NAME	DRAWING & REV.
410656	HT CALIBRATION BLOCK	W003 REV3, W004 REV4

PAR NO.	CHG. NOTICE NO.	P.O. ITEM NO.	PROJ./S.O. NO.	QTY. ON ORDER	QTY. RELEASED
0	001	001, 003, 004	VISN-9327	26	3

SUPPLIER	E. SPEC. & REV.	ORDER
TOOLING SPECIALISTS	N/A	COMPLETE ☐ YES ☑ NO

SERIAL OR IDENTIFICATION NOS.

30" SCH 1.10 - HT # 365682 - 1.145 J

6" SCH 80 - HT # N14446 - .467 B

4" SCH 120 - HT # M6108 - .450 A

The equipment shown hereon is released by W Quality Assurance. Shipment may be made subject to authorization by W Purchasing. In the Audit Checklist below, an A indicates acceptability, a C indicates a contingency and a W indicates that W QA has waived the auditing or witnessing of the attribute. All non-applicable items are lined out.

AUDIT CHECKLIST

- [x] Material Certifications
- [ ] ~~Hose Test Records~~
- [ ] ~~RT Film and Records~~
- [ ] ~~RT/MT Records~~
- [x] Visual
- [x] Dimensional
- [ ] ~~UT Records~~
- [ ] ~~Personnel Qualifications: Welding, NDT~~
- [ ] ~~~~
- [ ] ~~~~
- [ ] ~~Non-Operating Electrical Test~~
- [ ] ~~Operating Electrical Test~~
- [ ] ~~Pressure Test~~
- [ ] ~~Seat Tightness Test~~
- [ ] ~~Performance Test~~
- [x] Cleanliness
- [x] Packaging
- [ ] ~~Code Form~~
- [ ] ~~Painting~~
- [x] CERT. OF CONF.

DEVIATION NOTICES AND REMARKS (ALL DEVIATIONS HAVE BEEN APPROVED BY THE RESPONSIBLE WESTINGHOUSE ENGINEER UNLESS A SPECIFIC EXCEPTION IS STATED.)

THE SUPPLIER CERTIFIES that for the equipment and material released, all contractual requirements have been met. Approved deviations, if any, are listed above.

SUPPLIER SIGNATURE Thomas D Shearer DATE 7/29/80

The equipment shown hereon is released by Quality Assurance. Shipment may be made subject to authorization by Purchasing.

The equipment supplier has certified that the equipment above meets all requirements of the purchase order, drawings and specifications. Westinghouse has reviewed evidence supporting this release and except as specified above has detected no deviations from such requirements. This release does not waive any rights Westinghouse may have under the purchase order including Westinghouse's right to reject the equipment upon discovery of any such deviations after arrival at destination.

K.R. Moore 7-29-80
Westinghouse Quality Assurance Representative

REQUISITIONER

Tooling Specialists, Inc.
Certification Letter of Compliance

@ NES
P.O. Box 355
Pittsburgh Pa 15230

Date: 7/29/80

Tooling Specialists, Inc. certifies that all purchase order requirements have been met for the following equipment and material. Any deviations from the order requirements have had Westinghouse NSD approval prior to shipment. Deviation Notice (D/N) numbers applicable are NA (N/A if not applicable).

Westinghouse Purchase Order Number 544-MXK-410656-RN
P.O. Change Notice number(s) 00
Procurement Advisory Release (PAR) number(s) 00

P.O. Item #	Dwg. or Sketch and Rev. #	Base Mat'l & Heat #	Weld Joining Mat'l & Heat #	Cladding Mat'l and Heat #
001 1pc	W003-3	3G5682	NA	NA
003 1pc	W004-4 B	N14446	NA	NA
004 1pc	W004-4 A	M6108	NA	NA

weld joining procedure used NA (include revision #)

cladding procedure used NA (include revision #)

heat treating procedure used NA (include revision #)

One copy each of the following documents as required by the purchase order are attached to this letter. All (including letter) are included with this shipment.

- ✓ Westinghouse Quality Release
- ✓ Base material mill test report(s)
- NA Weld operator certification
- NA Heat treat chart(s)
- ✓ Inspection Report
- NA Weld joining material mill test report
- NA Cladding material mill test report
- NA Other

One additional copy each of this letter and the above documents are hereby forwarded to the Westinghouse Buyer.

All records supporting this certification letter are available at Tooling Specialists.

Thomas D Shearer
(signature)

Tooling Specialists, Inc.

INSPECTION REPORT

Page 1 of 1

TOOLING SPECIALISTS, INC.
Latrobe, Pa. 15650
Phone: (412) 539-2534

Dwg. # W004 | Revision 4 | Item
P. O. # 544-MK-H0656-RN | Work Order # 21860

CUSTOMER: WHES

PART DESCRIPTION: (1) 4" Sch 120; A 376 TP 316 SS Calibration block

IF OUT OF TOLERANCE, PLACE X IN BOX TO RIGHT OF DIMENSION.

DRAWING DIMENSIONS	Part No. Letter "A"	X	Part No.	X	Part No.	X	Part No.	X	Part No.	X	Part No.	X
Nom Wall T - .438	.450											
Hole Dia 5 - 3/32	.093											
(2) 1/2 T Holes	.224											
6" +2 -.250 Length	6.410											
Arc A° - 180°	180°											
C° - 25.43°	25.43°											
C" - .999"	.999"											
E° - 12.73°	12.73°											
E" - .5"	.5"											
F° - 16.30°	16.30°											
F" - .5"	.5"											
1 1/2" To hole	1.5"											
1 1/2" hole depth	1.5"											
1/2" Notch Location	.5"											
1" Typ Notches	1"											
1" To Notches	1"											
45°	45°											
R - 10% T	Radius .044-.046											
(2) 1/2" Hole Depth	.5"											

INSPECTOR: Wesley H. Jones 7-29-80

RECEIVING INSPECTOR:

NOM. PIPE SIZE"	SCHED ULE	NOM. WALL 'T'"	O.D."	HOLE DIAM ETER"	HOLES 1/4T	HOLES 1/2T	HOLES 3/4T	NOTCHES CIRC. O.D.	NOTCHES CIRC. I.D.	NOTCHES AXIAL O.D.	NOTCHES AXIAL I.D.	NOTCHES Length"	NOM. ARC A°	B°	B" (O.D.)	C°	C" (O.D.)	E°	E"& F"	F°
4	120	.438	4.5	3/32	-	2	-	X	X	X	X	6	180	-	-	25.43	.999	12.73	.5	16.30

NOTE: Original dimensional requirements supplied to manufacturer.

General Data

1. E and F Dimension - minimum at bottom of notches (.500").
2. D Dimension - Typical all notches (10% of measured thickness) +.500" -.010".
3. A Dimension + to 360° and -.080" of arc.
4. Length +2" -.25".
5. Holes optional for T less than .8".
6. Flat blocks .8"T or less may contain 1/2T hole only.
7. Final acceptable dimensions to be based on intent.
8. Hole location to be based on actual "T".
9. Flat side of notches to be perpendicular notched surfaces, within 2°.
10. Side drilled holes to be within ± 1/32" tolerance.

Intent

1. C Dimension to be approximately 3/4" from edge of arc segment.
2. E and F dimension applicable to both sides of centerline so as to provide 1" long (at bottom) notches.
3. B Dimension to locate axial notches so as not to impose on end of hole at C location or on end of notches at centerline.
4. Circumferential reflectors to be positioned to allow 2T (Full Vee) calibration at 45° beam angle (not applicable for 1 1/2" Sch 80, 1 1/2" Sch 160, 2" Sch 80, 2" Sch 160, 3" Sch 40 & 3" Sch 80).
5. Circumferential holes and notches to be plus or minus .1" from ends.

A 627-1-F

Babcock & Wilcox

Tubular Products Division

ALLIANCE, OHIO-1 | BEAVER FALLS, PA.-2 | MILWAUKEE, WISCONSIN-3

TEST REPORT

CUSTOMER ORDER NO. 53654-00N | DATE | DATE 3 8 72 | SHIPPING NUMBER 30528

SOLD TO:
CAPITOL PIPE & STEEL PRODUCTS, INC.
14 PERIMETER PARK
SUITE 112
ATLANTA, GEORGIA 30342

SHIP TO:
CAPITOL PIPE & STEEL PRODUCTS, INC.
730 SUPERIOR AVE.
CARNEGIE, PA.

Both raw materials and finished products on this order have been produced in the USA.

Heat treatment procedure per B&W letter dated 10/2/70 EW-AS-2

Furnace calibration per B&W letter dated 6/29/71

MATERIAL SPECIFICATION: SMLS B&W SPECIAL TP 316 EF AW PIPE TO ASTM A-376-70 AND ASME SA-376. CHECK ANALYSIS PER PARA. 7

4" 120 TP316

MARK SHIP TO: NO OIL

SHIP.

B & W ORDER NO. — SIZE | O.D. | WALL | PROM. | CODE NO. | "P" PARTIAL — "C" COMPLETE

ITEM	O.D.	WALL	LENGTH	SPECIAL MARKS	PC	PCS.	FOOTAGE	HYDRO TEST LBS. PER SQ. INCH	TESTS MADE
	243638-351727071350911000 0								ETCH
01	4 500	438	RL 17-24					2800	BEND
									FLATTENING ok
									FLANGE
									EXPANSION
									FLARE
									CORROSION
									CRUSH
									ULTRASONIC
									DYE PENETRANT

Tooling Specialists
5110

THIS IS TO CERTIFY THE ABOVE TUBES AND PIPE HAVE BEEN INSPECTED AND TESTED IN ACCORDANCE WITH AND HAVE MET ALL THE REQUIREMENTS OF THE SPECIFICATIONS.

THE BABCOCK & WILCOX COMPANY

des

BY John G. Swager — John G. Swager

CHEM ANALYSIS

ITEM	HEAT NO.	CARB.	MANG.	SUL.	PHOS.	SIL.	CHROM.	NI.	MO.	CU.	C.B.	TI.
	M6108	.059	1.64	.015	.016	.51	16.67	13.73	2.54			
	Tube ck	.063	1.67	.015	.019	.56	16.75	13.83	2.53			
	"	.065	1.68	.015	.019	.56	16.72	13.82	2.51			

ITEM	HEAT NO.	ULTIMATE STRENGTH	YIELD POINT	% ELONG. IN 2"	REDUCT. IN AREA	HARDNESS
		85295	50088	58		

STRIP [X] STD RD [ ] FULL SECTION [ ]

SWORN TO AND SUBSCRIBED BEFORE ME 3/9/72

Rita J. Pyle
NOTARY PUBLIC

RITA J. PYLE, Notary Public
W. Mayfield Borough, Bvr. County, Pa.
MY COMMISSION EXPIRES
COMMISSION EXPIRES 3, 1974

NEW YORK POWER AUTHORITY
INDIAN POINT NUCLEAR POWER PLANT
UNIT NO. 3
CALIBRATION BLOCKS

INDIAN POINT UNIT NO. 3 DESIGNATION : INT-41

COMPONENT/SYSTEM : 8" SCH 160 MAINSTEAM PIPING

SIZE/SCHEDULE : 8" SCH 160 .906"T

MATERIAL : A106 GRADE B CARBON STEEL

HEAT OR IDENTITY NUMBER : 50465

ASME SECTION V AND XI 1983 EDITION THROUGH SUMMER 1983 ADDENDA REQUIREMENTS:

1. Section V : T-547
2. Section XI : III-3400
3. Material : A234 WPC Carbon Steel
4. Size/Schedule: 8" SCH 160 .906"T

WESTINGHOUSE ELECTRIC CORPORATION - NSID - INSPECTION SERVICE DESIGN:

Calibration block was designed to meet intent of ASME Boiler and Pressure Vessel Code Section XI 1974 Edition through Summer 1975 Addenda.

RECOMMENDATION:

Calibration block follows the design and requirements for Section V and Section XI of the 1983 Edition through Summer 1983 Addenda except for arc length of 120° instead of 72° as required by Figure T-547.1 and as required by Table III-3430-1 notch depth to 0.104T - 0.009T squared with tolerance of +10% - 20%. P-Number Groupings for Materials A106 Grade B Carbon Steel and A234 WPC Carbon Steel are equivalent.

NOTES:

1. WHEN MEASURED FROM EITHER SIDE OF CENTERLINE MINIMUM LENGTH AT BOTTOM OF AXIAL NOTCHES TO BE 0.5" AS SHOWN IN SIDE VIEW.
2. NOTCH DEPTH 10% OF MEASURED THICKNESS +0.005"-0.010".
3. PREP ALLOWED IN AREA OF SIDE DRILLED HOLE SHALL NOT INFRINGE ON HOLE SIZE REQUIREMENTS.
4. CIRCUMFERENTIAL HOLES AND NOTCHES TO BE PLUS OR MINUS 0.1" FROM ENDS.
5. LOCATE AXIAL NOTCHES SO AS NOT TO IMPOSE ON END OF HOLES OR ON END OF NOTCHES AT CENTERLINE.
6. FLAT SIDE OF NOTCHES TO BE PERPENDICULAR NOTCHED SURFACES, WITHIN 2°.
7. HOLE LOCATION TO BE BASED ON ACTUAL "T".
8. SIDE DRILLED HOLE DIAMETER TOLERANCE TO BE WITHIN ±0.03"
9. DRILL HOLES PERPENDICULAR TO RADIUS.
10. ARC DIMENSION +360° AND -0.080".
11. LENGTH TOLERANCE TO BE +2.00"-0.25"

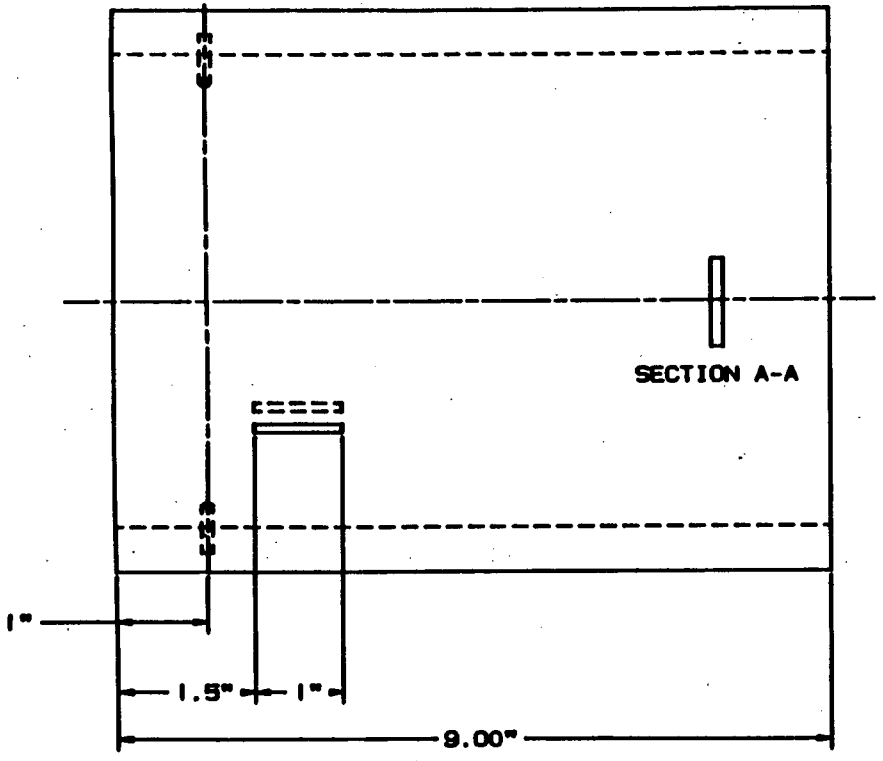

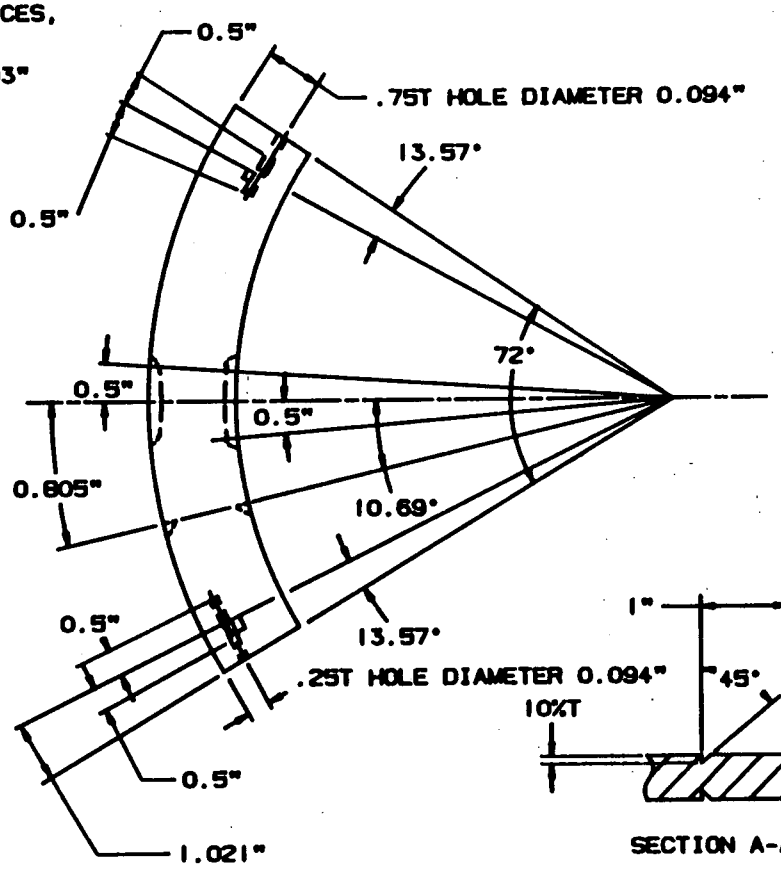

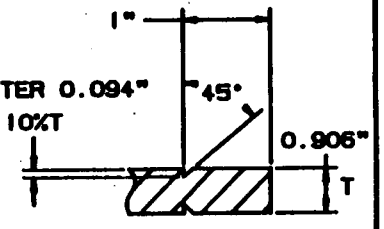

COMPUTER SYSTEM PLANT MODELING

NSSS TECHNICAL APPROVAL Phillip C. Burkes	11-20-86	Westinghouse Electric Corporation PLANT ENGINEERING DIVISION - PITTSBURGH, PA
LEVEL III REVIEW David Kunk	11-20-86	TITLE CALIBRATION BLOCK INT-41 8" SCH 160 MAINSTEAM PIPING 8" SCH 160 .906"T-A A106 GRADE B CARBON STEEL HEAT NO.: 50465
ENG		
ENG		
MFR		C DR. NO. REV.

REVISION

NSD PA1010

Nuclear Service Division
QUALITY RELEASE

QR— 3874 REV. 0

PURCHASE ORDER	PART NAME	DRAWING & REV.
544-435565	CALIBRATION BLOCKS	SEE BELOW

PAR NO	CHG NOTICE NO	P.O. ITEM NO	PROJ./S.O. NO	QTY ON ORDER	QTY RELEASED
—	—	001 + 002	IMSN-9527	001 6 EA 002 4 EA	001 6 EA 002 4 EA

SUPPLIER	E. SPEC. & REV.	ORDER
Tooling Specialists Inc	N/A	COMPLETE ☑ YES ☐ NO

SERIAL OR IDENTIFICATION NOS

001 6 EA 360°, 7" L Sch 40S To W 005 Rev 6

002 4 EA W Matl 8" Sch 160 SA 160 GR B To N 005 Rev 3 HT #304B5

The equipment shown hereon is released by W Quality Assurance. Shipment may be made subject to authorizaiton by W Purchasing. In the Audit Checklist below, an A indicates acceptability, a C indicates a contingency and a W indicates that W QA has waived the auditing or witnessing of the attribute. All non-applicable items are lined out.

AUDIT CHECKLIST

[A] Material Certifications	~~Non-Operating Electrical Tests~~
~~Heat Treat Records~~	~~Operating Electrical Test~~
~~RT Film and Records~~	~~Pressure Test~~
~~PT/MT Records~~	~~Seal Tightness Test~~
[A] Visual	~~Performance Test~~
[A] Dimensional	[A] Cleanliness
~~UT Records~~	[A] Packaging
~~Personnel Qualification: Welding, NDT~~	~~Code Form~~
[A] Certificate of Compliance	~~Painting~~

DEVIATION NOTICES AND REMARKS (ALL DEVIATIONS HAVE BEEN APPROVED BY THE RESPONSIBLE WESTINGHOUSE ENGINEER UNLESS A SPECIFIC EXCEPTION IS STATED.)

THE SUPPLIER CERTIFIES that for the equipment and material released, all contractual requirements have been met. Approved deviations, if any, are listed above.

SUPPLIER SIGNATURE Ronald Fuhrmann DATE 11-12-82

TITLE QC Coordinator

The equipment shown hereon is released by W Quality Assurance. Shipment may be made subject to authorization by W Purchasing.

The equipment supplier has certified that the equipment above meets all requirements of the purchase order, drawings and specifications. Westinghouse has reviewed evidence supporting this release and except as specified above has detected no deviations from such requirements. This release does not waive any rights Westinghouse may have under the purchase order including Westinghouse's right to reject the equipment upon discovery of any such deviations after arrival at destination

J. D. R. Wsaing 11/12/82

Westinghouse Quality Assurance Representative

372

REQUISITIONER

TOOLING SPECIALISTS, INC.
CERTIFICATION LETTER OF COMPLIANCE

TO: Westinghouse Electric Corp.
Nuclear Energy Systems
P.O. Box 355
Pittsburgh, Pennsylvania 15230

DATE: November 12, 1982

Tooling Specialists, Inc. certifies that all purchase order requirements have been met for the following equipment and material. Any deviations from the order requirements have had Westinghouse NSD approval prior to shipment. Deviation Notice (D/N) numbers applicable are NA (N/A if not applicable).

Westinghouse Purchase Order Number 544-MXS-435565
P.O. Change Notice number (s)
Procurement Advisory Release (PAR) number (s)

Quantity	P.O. Item #	DWG. or Sketch and Rev. #	Base Mat'l & Heat #	Weld Joining Mat'l & Heat #	Cladding Mat' and Heat #
6	001	W005 Rev 6	50465		
4	002	W003 Rev 3	TH5796		

weld joining procedure used NA
(include revision #)

cladding procedure used NA
(include revision #)

heat treating procedure used NA
(include revision #)

One copy each of the following documents as required by the purchase order are attached to this letter. All (including letter) are included with this shipment.

- ✓ Westinghouse Quality Release
- ✓ Base material mill test report (s)
- Weld operator certification
- Heat treat chart (s)
- ✓ Inspection Report
- Weld joining material mill test report
- Cladding material mill test report
- ✓ Other Letter of Compliance

One additional copy each of this letter and the above documents are hereby forwarded to the Westinghouse Buyer.

All records supporting this certification letter are available at Tooling Specialists.

Thomas G. Shearer Jr.
(signature)

Tooling Specialists, Inc.

INSPECTION REPORT

Page 1 of 1

TOOLING SPECIALISTS, INC.
Latrobe, Pa. 15650
Phone: (412) 539-2534

Dwg. # W 003 | Revision 3 | Item
P. O. # 54-435565 Item #02 | Work Order # 24381

CUSTOMER: WNES

PART DESCRIPTION: 4 Calibration Blocks 8" Sch 160 SA106 Grade B

IF OUT OF TOLERANCE, PLACE X IN BOX TO RIGHT OF DIMENSION.

DRAWING DIMENSIONS	Part No. A	X	Part No. B	X	Part No. C	X	Part No. D	X	Part No.	X	Part No.	X
Nom. Wall "T" .906"	.854"		.864"		.886"		.905"					
(2) 3/32 Dia Holes	.093"		.093"		.093"		.093"					
L - 9" +2" -.25"	9.98"		9.98"		9.98"		9.98"					
A° - 72°	72°		72°		72°		72°					
B° - 10.69°	10.69°		10.69°		10.69°		10.69°					
B" - .805"	.805"		.805"		.805"		.805"					
C° - 13.57°	13.57°		13.57°		13.57°		13.57°					
C" - 1.021"	1.021"		1.021"		1.021"		1.021"					
E° - 6.64°	6.64°		6.64°		6.64°		6.64°					
E" - .5"	.50"		.50"		.50"		.50"					
F° - 8.70°	8.70°		8.70°		8.70°		8.70°					
F" - .5"	.50"		.50"		.50"		.50"					
1/4 T To hole	.214"		.216"		.222"		.226"					
3/4 T To hole	.641"		.648"		665"		.679"					
(4) 1/2" Dim.	.50"		.50"		.50"		.50"					
(2) 1" Typ. Notches	1.00"		1.00"		1.00"		1.00"					
(2) 1 1/2 To Notches	1.50"		1.50"		1.50"		1.50"					
(2) 1" To holes	1.00"		1.00"		1.00"		1.00"					
(2) 1" To Notches	1.00"		1.00"		1.00"		1.00"					
(4) 45° Notches	45°		45°		45°		45°					
"D" - 10% "T" +.005 -.010	Range .077-.086		Range .080-.084		Range .079-.088		Range .082-.088					

INSPECTOR: Samuel J. Jones 11-11-82

RECEIVING INSPECTOR:

W.D.S. 10 Rev. 13 07/30/82

NOM. PIPE SIZE"	SCHED ULE	NOM. WALL 'T'"	O.D."	HOLE DIAM ETER"	HOLES 1/4T	1/2T	3/4T	NOTCHES CIRC. O.D.	CIRC. I.D.	AXIAL O.D.	AXIAL I.D.	Length"	NOM. ARC A°	B°	B" (O.D.)	C°	C" (O.D.)	E°	E"& F"	F°
8	160	.906	8.625	3/32	1	-	1	X	X	X	X	9	72	10.69	.805	13.57	1.021	6.64	.5	8.70

NOTE: Original dimensional requirements supplied to manufacturer.

General Data

1. E and F Dimension - minimum at bottom of notches (.500").
2. D Dimension - Typical all notches (10% of measured thickness) +.500" -.010".
3. A Dimension + to 360° and -.080" of arc.
4. Length +2" -.25".
5. Holes optional for T less than .8".
6. Flat blocks .8"T or less may contain 1/2T hole only.
7. Final acceptable dimensions to be based on intent.
8. Hole location to be based on actual "T".
9. Flat side of notches to be perpendicular notched surfaces, within 2°.
10. Side drilled holes to be within ± 1/32" tolerance.

Intent

1. C Dimension to be approximately 3/4" from edge of arc segment.
2. E and F dimension applicable to both sides of centerline so as to provide 1" long (at bottom) notches.
3. B Dimension to locate axial notches so as not to impose on end of hole at C location or on end of notches at centerline.
4. Circumferential reflectors to be positioned to allow 2T (Full Vee) calibration at 45° beam angle (not applicable for 1 1/2" Sch 80, 1 1/2" Sch 160, 2" Sch 80, 2" Sch 160, 3" Sch 40 & 3" Sch 80).
5. Circumferential holes and notches to be plus or minus .1" from ends.

PHOENIX STEEL CORPORATION

8-160

TUBE DIVISION
PHOENIXVILLE, PENNA.

CERTIFICATE OF INSPECTION AND TESTS

DATE: 2-4-81	DATE SHIPPED: 1-14-81	MILL ORDER NO. T-3135-A-30	SHIPPING LIST NO 57C
SOLD TO: Tioga Pipe Supply Co., Inc.		CUSTOMER ORDER NO. A6548	
		CAR NO. PC 577594	
		MATERIAL: SEAMLESS ☒ PIPE ☐ TUBE, HOT FINISHED	
SHIP TO:		SPECIFICATION: ASTM A-106-B-79b, ASME SA-106-B	

NO. PCS.	OD	WALL	LENGTH	TOTAL FT.	TOTAL WT.	HEAT NO.
—	8.625" x .906"					50465

The material was manufactured in accordance with the Quality System Program audited and approved by Tioga Pipe Supply Co., Inc. on 11-13-79 as conforming with the requirements of ASME Section III, Subarticle NCA-3800.

HEAT NO.	C	MN.	P.	S.	SI.	CU.	NI.	CR.	MO.	V.	
50465	.26	.82	.010	.021	.23						Ladle Analysis
50465	.26	.80	.010	.023	.23						Product Analysis

HEAT NO.	TENSILE (KSI)	YIELD (KSI) ( )	% ELONG. IN 2"	% RA	HARDNESS ROCKWELL	HARDNESS BRINELL	GRAIN SIZE
50465	78.5	46.5	30.00				

THESE MILL TEST REPORTS APPLY TO:
YOUR P. O. # 6242
TIOGA PIPE SUPPLY CO., INC.

Q. A. Approved
By MD
Date 2/6/81

JOMINY DISTANCE - 16TH	ROCKWELL C	FLATTENING	OK	HYDROSTATIC PSI	2800

1	2	4	6	8	10	12	14	16	20	24	28	32

THE PHOENIX STEEL CORPORATION HEREBY CERTIFIES THAT THE ABOVE MATERIALS HAVE BEEN INSPECTED AND TESTED IN ACCORDANCE WITH THE METHODS PRESCRIBED IN THE APPLICABLE SPECIFICATIONS AND THE RESULTS OF SUCH INSPECTION AND TESTS AS CONTAINED IN THE COMPANY'S RECORDS ARE AS SHOWN ABOVE. FOR PROPERTIES OR CHARACTERISTICS FOR WHICH NO METHODS OF INSPECTION OR TESTING ARE PRESCRIBED BY SAID SPECIFICATIONS, THE STANDARD MILL INSPECTION AND TESTING PRACTICES OF THE PHOENIX STEEL CORPORATION HAVE BEEN APPLIED. BASED UPON SUCH INSPECTION AND TESTS, THE ABOVE MATERIALS HAVE BEEN APPROVED AS FULFILLING THE REQUIREMENTS OF SAID SPECIFICATION.

R. S. Schnell
ENGINEER OF TESTS

FORM I&T-0153-R4 (12/76)

WESTINGHOUSE-NUCLEAR ENERGY SYSTEM

SHOP ORDER

COMPANY

MMM 1906 FILMSO

INT-41

NEW YORK POWER AUTHORITY
INDIAN POINT NUCLEAR POWER PLANT
UNIT NO. 3
CALIBRATION BLOCKS

INDIAN POINT UNIT NO. 3 DESIGNATION	:	INT-42
COMPONENT/SYSTEM	:	ACCUMULATOR TANKS 31, 32, 33 & 34 AND BORON INJECTION TANK
SIZE/SCHEDULE	:	2.6"T X 15.0"L X 6.0"W
MATERIAL	:	SA516 GRADE 70 CARBON STEEL
HEAT OR IDENTITY NUMBER	:	803C63380

ASME SECTION V AND XI 1983 EDITION THROUGH SUMMER 1983 ADDENDA REQUIREMENTS:

1. Section V : T-434
2. Material : SA516 Grade 70 Carbon Steel
3. Size/Schedule: 2.6"T (Average) x 8.65"L x 6.0"W

WESTINGHOUSE ELECTRIC CORPORATION - NSID - INSPECTION SERVICE DESIGN:

Calibration block was designed to requirements of ASME Section V and XI 1983 Edition through Summer 1983 Addenda.

RECOMMENDATION:

None.

NOTES:
1. DRILL AND REAM 6 HOLES 3" MINIMUM DEEP; HOLE DIAMETER TOLERANCE ± 0.03"
2. HOLE LOCATION THROUGH THICKNESS TOLERANCE ± 0.12"
3. BLOCK THICKNESS TOLERANCE ± 0.06"
4. HEAT TREAT BLOCK 1100° F. RATE OF HEATING ABOVE 600°F NOT TO EXCEED 164°F PER HOUR. HOLD FOR 2.5 HOURS. FURNACE COOL TO 600°F AT THE RATE OF COOLING NOT TO EXCEED 205°F PER HOUR.
5. SURFACE FINISH TO BE 63 RMS TO 250 RMS.
6. CLAD MATERIAL 309 STAINLESS STEEL.
7. CLAD DIRECTION TO BE PARALLEL TO HOLE AXIS.
8. CLADDING TO BE DONE BY AUTOMATIC SUBMERGED ARC.
9. CLAD SURFACE TO BE AS CLADDED, WIRE BRUSHED AND CLEANED.
10. TOLERANCE GIVEN ONLY ON CRITICAL DIMENSIONS.
11. APPLICABLE TO SECTION XI 1983 EDITION THRU SUMMER 1983 ADDENDA.

• MINIMUM DIMENSION

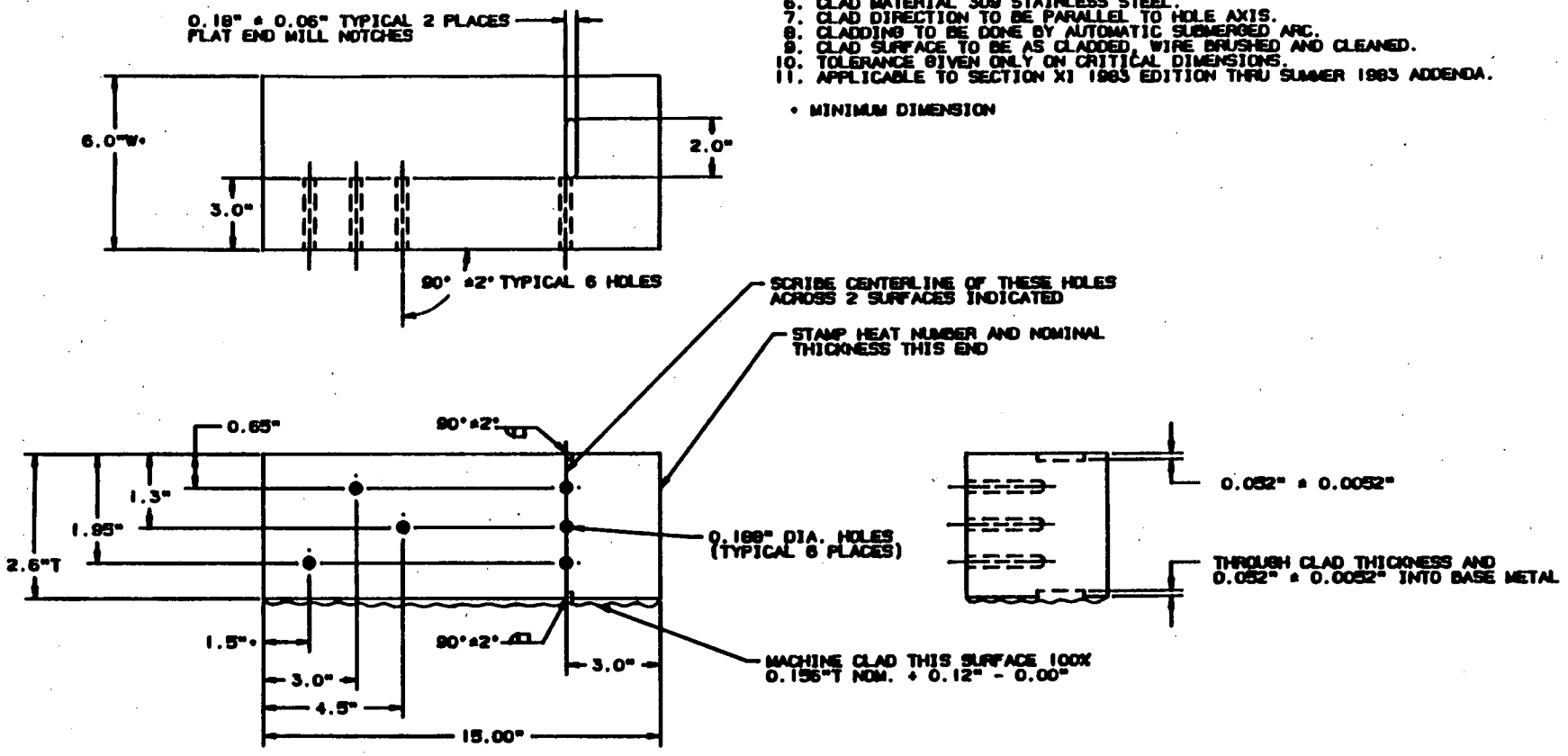

COMPUTER SYSTEM PLANT MODELING

NSSS TECHNICAL APPROVAL Philip C. Burton	7-30-86	Westinghouse Electric Corporation PLANT ENGINEERING DIVISION - PITTSBURGH, PA
LEVEL III APPROVAL David Kunk	7-30-86	TITLE CALIBRATION BLOCK INT-42 ACCUMULATOR TANK AND BORON INJECTION TANK 2.6"T X 15.0"L X 6.0"W SA 516 GRADE 70 CARBON STEEL HEAT NO.: B03C63380
PRODUCT ASSURANCE APPROVAL	7/30/86	
PRODUCT LINE APPROVAL David Kunk	7-30-86	SIZE C DWG. NO. REV.

REVISION | BY | DATE

Nuclear Services Integration Division

QUALITY RELEASE

QR- 13829 REV. 0

PURCHASE ORDER	PART NAME	DRAWING & REV
MN 22563	CALIBRATION BLOCK	INT-42

PAR NO	CHG NOTICE NO	P.O ITEM NO.	PROJ./S.O. NO	QTY ON ORDER	QTY RELEASED
—	—	01	JN4N CA 454	1	1

SUPPLIER	E. SPEC. & REV.	ORDER
TOOLING SPECIALISTS INC	N/A	COMPLETE ☒ YES ☐ NO

SERIAL OR IDENTIFICATION NOS

HT = 803C63380

The equipment shown hereon is released by W Quality Assurance. Shipment may be made subject to authorization by W Purchasing. In the Audit Checklist below, an A indicates acceptability, a C indicates a contingency and a W indicates that W QA has waived the auditing or witnessing of the attribute. All non-applicable items are lined out.

AUDIT CHECKLIST

[A] Material Certifications — ATTACHED (BLOCK & CLAD MATL)	[ ] ~~Non-Operating Electrical Tests~~
[A] Heat Treat Records — ATTACHED	[ ] ~~Operating Electrical Test~~
[ ] ~~RT Film and Records~~	[ ] ~~Pressure Test~~
[ ] ~~PT/MT Records~~	[ ] ~~Seat Tightness Test~~
[A] Visual — 10 X MAG	[ ] ~~Performance Test~~
[A] Dimensional — ATTACHED	[A] Cleanliness
[ ] ~~UT Records~~	[A] Packaging
[A] Personnel Qualification: Welding, ~~NDT~~ CLADDING TSI ~~QS~~-846	[ ] ~~Code Form~~
[A] C OFC	[ ] ~~Painting~~
[ ] —	[ ] —

DEVIATION NOTICES AND REMARKS (ALL DEVIATIONS HAVE BEEN APPROVED BY THE RESPONSIBLE WESTINGHOUSE ENGINEER UNLESS A SPECIFIC EXCEPTION IS STATED.)

MATL. FOR BLOCK HT # 803C63380 REJECTED TO TSI ON QR 13804 REV 0

THE SUPPLIER CERTIFIES that for the equipment and material released, all contractual requirements have been met. Approved deviations, if any, are listed above.

SUPPLIER SIGNATURE: [signature] DATE: 10/6/86

TITLE: Manager Special Products

The equipment shown hereon is released by Quality Assurance. Shipment may be made subject to authorization by Purchasing.

The equipment supplier has certified that the equipment above meets all requirements of the purchase order, drawings and specifications. Westinghouse has reviewed evidence supporting this release and except as specified above has detected no deviations from such requirements. This release does not waive any rights Westinghouse may have under the purchase order including Westinghouse's right to reject the equipment upon discovery of any such deviations after arrival at destination.

[signature] T.R. Wearing 10/6/86

Westinghouse Quality Assurance Representative

NSID 1010 11-84

REQUISITIONER

TO: Tooling Specialists

FM: Westinghouse Electric Corporation NSID Inspection Services

Subject: Calibration Block INT-42
P.O. MN 22563
Customer: New York Power Authority
Indian Point Unit No.3

The raw form of Calibration Block INT-42 was examined prior to final machining / drilling for laminates and other basic process flaws which would prohibit its use as an ultrasonic reference standard. A 0° 2.25 MHZ 1" Diameter search unit was used to obtain an 80% backwall response for reference sensitivity. The block was completely scanned at 2X-3X reference sensitivity,and no reflectors other than normal backwall response was noted.The block is free from interfering reflectors and is acceptable for use as a calibration standard.

Dan Kurek 8-11-86

David Kurek Level III
W NSID Inspection Services

TOOLING SPECIALISTS, INC.

CERTIFICATION LETTER OF COMPLIANCE

TO: Westinghouse Electric Corporation
Nuclear Energy Systems
P. O. Box 355
Pittsburgh PA 15230

DATE: October 3, 1986

Tooling Specialists, Inc. certifies that all purchase order requirements have been met for the following equipment and material. Any deviations from the order requirements have had Westinghouse NES approval prior to shipment. Deviation Notice (D/N) numbers applicable are _____ (N/A if not applicable).

Westinghouse Purchase Order Number MN-22563-D
P.O. Change Notice number (s) _____
Procurement Advisory Release (PAR) number (s) _____

Quantity	P.O. Item #	DWG. or Sketch and Rev. #	Base Mat'l & Heat #	Weld Joining Mat'l & Heat #	Cladding Mat'l and Heat #
1	001	INT-42	803C63380	309 Flux	S464850 5267

Weld joining procedure used _____ (include revision #)

Cladding procedure used TSI-CSS-846 (include revision #)

Heat treating procedure used _____ (include revision #)

One copy each of the following documents as required by the purchase order are attached to this letter. All (including letter) are included with this shipment.

- X Westinghouse Quality Release
- X Base material mill test report (s)
- ___ Weld operator certification
- X Heat treat chart (s)
- X Inspection Report
- ___ Weld joining material mill test report
- X Cladding material mill test report
- X Other Letter of Compliance

One additional copy each of this letter and the above documents are hereby forwarded to the Westinghouse Buyer.

All records supporting this certification letter are available at Tooling Specialists.

Thomas D. Shearer
(signature)

Tooling Specialists, Inc.

INSPECTION REPORT

Page 1 of 1

TOOLING SPECIALISTS, INC.
Latrobe, Pa. 15650
Phone: (412) 539-2534

Dwg. # Sketch
P. O. # Item 001 MN-22563-D
Revision —
Item —
Work Order # 27010

CUSTOMER: W NES

PART DESCRIPTION: (1) Calibration Block ENT-42, HT No. 803C63380

IF OUT OF TOLERANCE, PLACE X IN BOX TO RIGHT OF DIMENSION.

DRAWING DIMENSIONS	Part No. ENT-42 X	Part No. X	Part No. X	Part No. X	Part No. X	~~Part No.~~ Gage No X
(2) .18" t.06" wide flat bottom notches	.183"					355
6.0" "W"	6.014"					149
(2) 3.0" To notches	3.002"					149
(2) 2.0" Notch Lengths	2.005"					149
6 holes 90° ± 2° Typ.	OK 90°					149
Scribe ℄ holes across 2 surfaces indicated	OK					Visual
(2) 90° ± 2° Notches	OK 90°					149
0.65" To ℄ holes	.652"					149
1.3" To ℄ holes	1.302"					149
1.95" To ℄ holes	1.952"					149
1.5" To ℄ hole	1.500"					149
3.0" To ℄ hole	3.002"					149
4.5" To ℄ hole	4.505"					149
15.00"	15.015"					149
3.00" To ℄ holes	Range 2.990"-2.997"					149
Stamp Heat No. & nominal Thickness	OK					Visual
2.6" "T"	2.60"					Scale
(6) .188" Ø Holes ±.03"	.188"					355
(6) holes 3" min depth	3.020"					142
Machine Clad 100% 0.156 nom +0.12" −0.00"	Range .156-.250					Scale
0.052" ±.0052 Notch depth	.052"					169
Through Clad thickness and 0.052 ±.0052 into basemetal	.052"					169
Notes 1, 2, 3, 5, 7, 9 & 10	OK					
(2) 3.0" To Top notches	3.002"					149

INSPECTOR: Wesley L. Jones 9-25-86

RECEIVING INSPECTOR:

48597 (REV.A 12-77)

BURNS HARBOR PLANT

BETHLEHEM STEEL CORPORATION
METALLURGICAL DEPARTMENT

REPORT OF TESTS AND ANALYSES

SHIPMENT NO.	DATE SHIPPED	CAR OR VEHICLE NO.	
803-12481	6-21-85	WILLETT CO TRLR 28946	PAGE 2

SOLD TO
JOS T RYERSON & SON INC
BOX 8000A
CHICAGO IL 60680

SHIP TO
JOS T RYERSON & SON INC
SPAN A-BROWN SECTION
323 W 83RD ST
CHICAGO IL 60621

NOTE	SERIAL NUMBER	PAT. NO.	HEAT NUMBER	SIZE AND QUANTITY: NO. PCS.	THICKNESS INCHES	WIDTH OR DIA. INCHES	LENGTH INCHES	WEIGHT POUNDS	YIELD POINT PSI	TENSILE STRENGTH PSI	ELONG. IN	ELONG. %
	PLATES - 3437-K, ASTM A516-82 GR 70 PVQ, ASME SA516 MICRO ALLOY ADDITIONS GR 70 PVQ WINTER 83 ADD, ADDITIONAL TENSION TEST, CH-V SA20S5 MULT L 20 FTLB AT -50F --- GAS CUT 4 SIDES NORMALIZE											
	MFST - LIFT MAX 10 TON-SIZES & GAUGES SEP UNLOG OH-CHAIN-SLING-PLATE HOOK											
	CU# 1A28366 GH 021-6843											
	PLATES HEAT TREATED WITH TEST SPECIMENS ATTACHED AND YIELD STRENGTH @ .5% E.U.L.											
	C 10725		803C63380	1	3	96	240	19602	49800	80100	2	27
									47600	79800	2	26
					N 1650 DEG F - 170 MIN							

NOTE Q—QUENCH TEMPERATURE T—TEMPER TEMPERATURE N—NORMALIZE TEMPERATURE

SERIAL NUMBER	PAT. NO.	HEAT NUMBER	HARD	BEND	CHARPY IMPACT: THICKNESS INCHES	TYPE	SIZE	DIR.	TEST TEMP F	ENERGY FT. LBS. 1	2	3	SHEAR (%) 1	2	3	LAT. EXP. MIL 1	2
C 10725		803C63380		OK	3.000	V	FULL	L	-50	49	58	42					

-VERIFIED-

JUL 1 1985

HEAT NUMBER	CHEMICAL ANALYSIS: C	Mn	P	S	Si	Cu	Ni	Cr	Mo	V	Ti	Al	B	Cb	N
803C63380	.21	1.06	.019	.019	.251	.290	.21	.24	.052						

I CERTIFY THAT THE ABOVE RESULTS ARE A TRUE AND CORRECT COPY OF RECORDS PREPARED AND MAINTAINED BY BETHLEHEM IN COMPLIANCE WITH THE REQUIREMENTS OF THE SPECIFICATION CITED ABOVE.

CHIEF METALLURGIST W. No. BARGERON PER TAE

SANDVIK Steel

MATERIAL CERTIFICATE

SANDVIK STEEL CO.
P.O. BOX 1220, SCRANTON, PA. 18501 PH: 717 - 587-5191
PLANT LOCATION: INTERSTATE 81, WAVERLY EXIT 59

CUSTOMER PURCHASE ORDER NO.	SANDVIK ORDER NO.	ITEM	SPECIAL CODE	MARKS	CERTIFICATE DATE
M 32449-407	551900			330#	10/10/85

SOLD TO: WILLIAMS AND COMPANY INC
PITTSBURGH PA

TOOLING SPECIALISTS INC
LATROBE PA

SPECIFICATION AND MATERIAL:

SANDVIK FLUX TYPE 34WF FOR STRIP ELECTRODES

Lot 5267

This is to certify that, as contained in Sandvik's records, the contents of this certificate are correct and accurate, and that the material is as stated above.

For Bengt H. Berg, Manager, Product Quality and Metallurgy

Judith Hallenbeck (W-S-4, REV. 3) jh

SL 5030

CUSTOMER ORIGINAL

MATERIAL CERTIFICATE 5 8497

SANDVIK Steel

SANDVIK STEEL CO.
P.O. BOX 1220, SCRANTON, PA. 18501 PH. 717 - 587-5191
PLANT LOCATION: INTERSTATE 81, WAVERLY EXIT 59

CUSTOMER PURCHASE ORDER NO	SANDVIK ORDER NO	ITEM	SPECIAL CODE	MARKS	CERTIFICATE DATE
5849799-S-0607	452551		28322	310.5#	11/15/84

SOLD TO: WILLIAMS AND COMPANY INC
PITTSBURGH PA LOUISVILLE KY

SPECIFICATION AND MATERIAL:
AWS A-5.9
ASME SFA-5.9
SANDVIK STAINLESS STEEL WELDING WIRE TYPE ER 309 3/32" x 60

Filler Metal Analysis, %

Heat	C	Si	Mn	P	S	Cr	Ni
S464850	.058	.42	1.84	.008	.019	23.26	12.86

Mo	Cb/Nb	Ta	Ti	Cu
.02	.01	.01	.06	.027

For Bengt H. Berg, Manager, Product Quality and Metallurgy

(W-B-A-1, [illegible])

QA APPROVED DEC 17 '85

SL 5030

CUSTOMER ORIGINAL

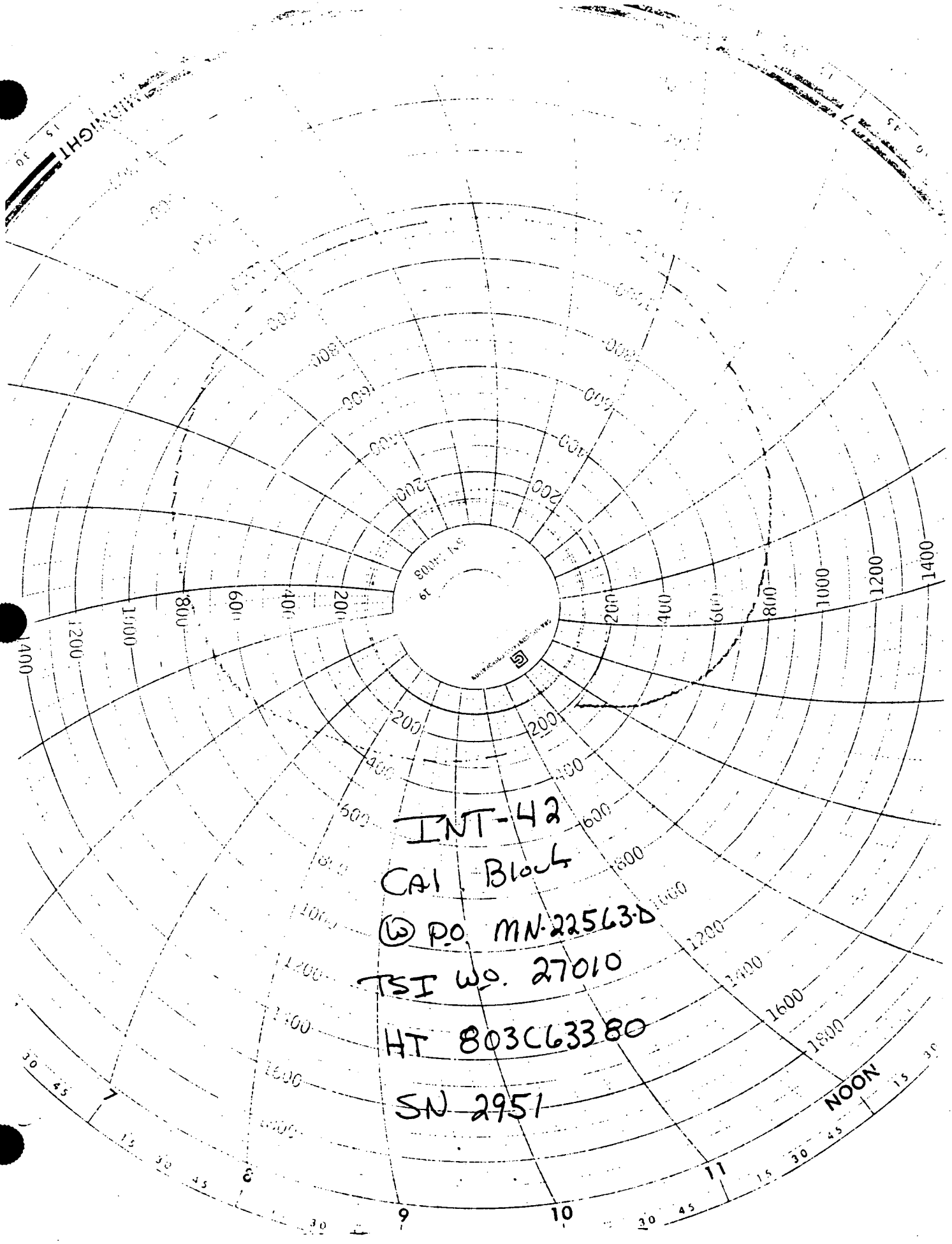
MIDNIGHT
NOON
7
9
10
11
3
1400
1200
1000
800
600
400
200
1600
1800
INT-42
CAI Block
(W) P.O. MN-22563-D
TSI W.O. 27010
HT 803C63380
SN 2951

NEW YORK POWER AUTHORITY
INDIAN POINT NUCLEAR POWER PLANT
UNIT NO. 3
CALIBRATION BLOCKS

INDIAN POINT UNIT NO. 3
DESIGNATION : INT-43

COMPONENT/SYSTEM : REACTOR VESSEL FLANGE TO SHELL FROM I.D. AND REACTOR VESSEL SHELL

SIZE/SCHEDULE : 11.0"T X 38"L X 6.0"W

MATERIAL : SA533 GRADE B CLASS 1 CARBON STEEL

HEAT OR IDENTITY NUMBER : C5128-2

ASME SECTION V AND XI 1983 EDITION THROUGH SUMMER 1983 ADDENDA REQUIREMENTS:

1. Section V : T-110 and T-434
2. Material : SA302 Grade B Carbon Steel
3. Size/Schedule: 11.0"T x 33.0"L x 6.0"W

WESTINGHOUSE ELECTRIC CORPORATION - NSID - INSPECTION SERVICE DESIGN:

Calibration block was designed to requirements of ASME Section V and XI 1983 Edition through Summer 1983 Addenda and utilizing equivalent P-Number Groupings for Materials SA302 Grade B Carbon Steel and SA533 Grade B Class 1 Carbon Steel.

RECOMMENDATION:

None.

NOTES:
1. BLOCK SURFACE FINISH: 125 RMS MINIMUM EXCEPT SURFACE "A".
2. HEAT TREAT BLOCK TO 1150°F. RATE OF HEATING ABOVE 600°F NOT TO EXCEED 100°F PER HOUR. HOLD FOR 3 HOURS MINIMUM. FURNACE COOL TO 600°F AT A RATE OF COOLING NOT TO EXCEED 100°F PER HOUR.
3. STAMP BLOCK HEAT NO. AND ID ON SURFACE "A".
4. CLAD MATERIAL: 309/308 STAINLESS STEEL
5. CLAD DEPOSITION: AUTOMATICALLY APPLIED (SAW PROCESS) PER PROCEDURE TSI-C39-848.
6. SURFACE "A" SHALL REMAIN ESSENTIALLY AS CLAD WITH LIGHT BLENDING OF SURFACE IRREGULARITIES ONLY.

TOLERANCES:
7. NOTCH LENGTH ± 1/16".
8. NOTCH WIDTH +0 -1/16".
9. NOTCH DEPTH +10% -20%.
10. NOTCH PERPENDICULARITY ±2%.
11. HOLE DEPTH +1/8" -0
12. HOLE DIAMETER ±1/32".
13. HOLE LOCATION THROUGH THE THICKNESS ± 1/8".
14. CLAD THICKNESS +1/8" -0.
15. CLAD SURFACE TO BE AS CLADDED, WIRE BRUSHED AND CLEANED.
16. ALL OTHER DIMENSIONS ±1/16".
17. APPLICABLE TO SECTION XI 1983 EDITION THRU SUMMER 1983 ADDENDA.

• MINIMUM DIMENSION

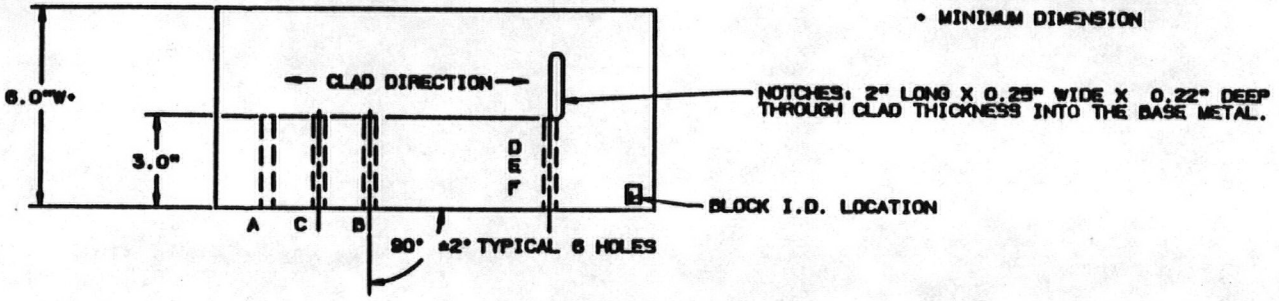

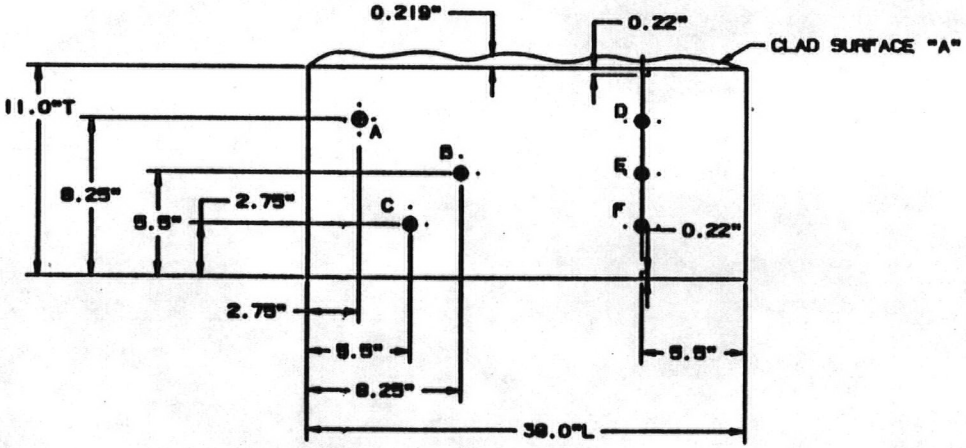

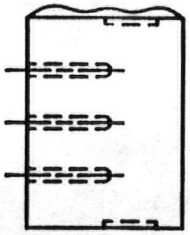

HOLES A THRU F 3" DEEP X 0.437" DIAMETER.

COMPUTER SYSTEM PLANT MODELING

NSID TECHNICAL APPROVAL Laurie E. Mathis	07-21-87	Westinghouse Electric Corporation PLANT ENGINEERING DIVISION - PITTSBURGH, PA
LEVEL III APPROVAL D. Rock	7-21-87	TITLE CALIBRATION BLOCK INT-43 REACTOR VESSEL FLANGE TO SHELL FROM I.D. AND REACTOR VESSEL SHELL 11.0"T X 39.0"L X 6.0"W SA 533 GRADE B CLASS 1 CARBON STEEL HEAT NO.: C8129-2
PRODUCT ASSURANCE APPROVAL	7/27/87	
PRODUCT LINE APPROVAL	7/29/87	SIZE C DR. NO. INT-203 REV. 0

REVISION

Nuclear Services Integration Division

QUALITY RELEASE

QR- 12224 REV. 0

PURCHASE ORDER	PART NAME	DRAWING & REV
MN 22574D	CALIBRATION BLOCKS	—

PAR NO	CHG NOTICE NO.	P.O. ITEM NO.	PROJ./S.O. NO.	QTY. ON ORDER	QTY. RELEASED
N/A	PRCN 002	001, 002, 004		4	3

SUPPLIER	E. SPEC. & REV	ORDER
TOOLING SPECIALISTS INC	N/A	COMPLETE ☐ YES ☒ NO

SERIAL OR IDENTIFICATION NOS.

BLOCK NOS INT-44, -45, -43

HEAT NO (BASE MATR'L): E5128

The equipment shown hereon is released by W Quality Assurance. Shipment may be made subject to authorization by W Purchasing. In the Audit Checklist below, an A indicates acceptability, a C indicates a contingency and a W indicates that W QA has waived the auditing or witnessing of the attribute. All non-applicable items are lined out.

AUDIT CHECKLIST

☒ A	Material Certifications: ATTACHED	☐	~~Non-Operating Electrical Tests~~
☒ A	Heat Treat Records: ATTACHED	☐	~~Operating Electrical Test~~
☐	~~RT Film and Records~~	☐	~~Pressure Test~~
☐	~~PT/MT Records~~	☐	~~Seal Tightness Test~~
☒ A	Visual	☐	~~Performance Test~~
☒ A	Dimensional: ATTACHED	☒ A	Cleanliness
☐	~~UT Records~~	☒ A	Packaging
☐	~~Personnel Qualification: Welding, NDT~~	☐	~~Code Form~~
☒ A	C of C	☐	~~Painting~~
☐		☐	

RECEIVED MAY 7 1987 REACTOR SERVICES

DEVIATION NOTICES AND REMARKS (ALL DEVIATIONS HAVE BEEN APPROVED BY THE RESPONSIBLE WESTINGHOUSE ENGINEER UNLESS A SPECIFIC EXCEPTION IS STATED)

DRAWINGS SUPPLIED HAVE NO DWG NO

THE SUPPLIER CERTIFIES that for the equipment and material released, all contractual requirements have been met. Approved deviations, if any, are listed above.

SUPPLIER SIGNATURE: Thomas D Shown DATE: 4/24/87

TITLE: Manager Special Products

The equipment shown hereon is released by Quality Assurance. Shipment may be made subject to authorization by Purchasing.

The equipment supplier has certified that the equipment above meets all requirements of the purchase order, drawings and specifications. Westinghouse has reviewed evidence supporting this release and except as specified above has detected no deviations from such requirements. This release does not waive any rights Westinghouse may have under the purchase order including Westinghouse's right to reject the equipment upon discovery of any such deviations after arrival at destination.

B Schumacher 4/24/87

Westinghouse Quality Assurance Representative

NSID 1010 11-84

REQUISITIONER

TOOLING SPECIALISTS, INC.

CERTIFICATION LETTER OF COMPLIANCE

TO: Westinghouse Electric Corp.
Nuclear Energy Systems
P. O. Box 355
Pittsburgh PA 15230

DATE: April 24, 1987

Tooling Specialists, Inc. certifies that all purchase order requirements have been met for the following equipment and material. Any deviations from the order requirements have had Westinghouse NES approval prior to shipment. Deviation Notice (D/N) numbers applicable are _____ (N/A if not applicable).

Westinghouse Purchase Order Number MN 22574-D
P.O. Change Notice number (s) C/N-2
Procurement Advisory Release (PAR) number (s) _____

Quantity	P.O. Item #	DWG. or Sketch and Rev. #		Base Mat'l & Heat #	Weld Joining Mat'l & Heat #	Cladding Mat' and Heat #
			Block			309 S464850
1	001	INT-204	INT-44	C5128-2		308 S7A3106 Flux Lot 1107
1	002	INT-205	INT-45	C5128-2		"
1	004	INT-203	INT-43	C5128-2		"

Weld joining procedure used N/A (include revision #)

cladding procedure used TSI-CSS-846 (include revision #)

heat treating procedure used Westinghouse - Nuclear Energy Systems (include revision #)

One copy each of the following documents as required by the purchase order are attached to this letter. All (including letter) are included with this shipment.

- X Westinghouse Quality Release
- X Base material mill test report (s)
- _____ Weld operator certification
- X Heat treat chart (s)
- X Inspection Report
- _____ Weld joining material mill test report
- X Cladding material mill test report
- X Other Letter of Compliance

One additional copy each of this letter and the above documents are hereby forwarded to the Westinghouse Buyer.

All records supporting this certification letter are available at Tooling Specialists.

(signature)

Tooling Specialists, Inc.

PURCHASER:

Combustion Engr., Inc.
10 Mr. S.G. Kiser, Pur. Supv.
911 W. Main St.
Chattanooga, Tenn. 37402

LUKENS STEEL COMPANY
COATESVILLE, PA. 19320

TEST CERTIFICATE

MILL ORDER NO.	CUSTOMER P.O.	
79662-1	44-82880	MP 41575 JW

DATE: 4-16-75 FILE NO. 1114-10-02

CONSIGNEE:

THIS MATERIAL HAS BEEN MANUFACTURED AND TESTED IN ACCORDANCE WITH PURCHASE ORDER REQUIREMENTS AND SPECIFICATION(S):

ASME M-P3F19(B) 1972 SA-533 Gr. B Cl. 1 Para S2 ASME Code Section 2 & 3 Cl. 1 1971 Edition Thru Winter 1972 Addenda

BEND TEST O.K. HOMOGENEITY TEST CONT. #12773 JOB # 752122 MEEK CODE # R-5404

CHEMICAL ANALYSIS

MELT NO.	C	Mn	P	S	Cu	Si	Ni	Cr	Mo	V	Ti	XX	X		BASIC PROCESS
05128	23	1.30	009	005	08	23	62		55	00		FOR	VIP STEEL		ELEC.
Ck.Slab 2	25	1.33	012	003	08	23	63		53	00					

PHYSICAL PROPERTIES

MELT NO.	SLAB NO.	YIELD PSI X100	TENSILE PSI X100	% ELONG. IN 2"	% R.A.	BHN	IMPACTS				DESCRIPTION
05128	2	TX804	955	22							1- 11-3/4" x 101-9/16 x 214-3/8
		MX788	955	24							

Plate XXXX furnished in unheat treated condition but stress relieved by heating to XXXXXXXXX 1100°F./1300°F., held 1/2 hr. per inch min., and air cooled.

Tests heated to 1575°F., held 4 hrs. and program cooled per O.K. Cooling Curve for a 11-3/4" Ga. Plate, then tempered 1225°F., held 4 hrs. and air cooled, then stress relieved by heating within a rate of 100°F. per hr. to 1150°F.-450°F., held 40 hrs. and furnace cooled within a rate of 100°F. per hr. to 600°F.

U.T. Testing, Impacts, and Drop Weights were not performed by LUKENS STEEL CO.

Length is major direction of rolling.

R-5404-1
12773
E.H.
4/24/75

We hereby certify the above information is correct.

SUPERVISOR-TESTING F. H. Kline

MATERIAL CERTIFICATE

5 8497

SANDVIK Steel

SANDVIK STEEL CO.
P.O. BOX 1220, SCRANTON, PA. 18501 PH: 717 - 587-5191
PLANT LOCATION: INT. STATE 81, WAVERLY EXIT 59

CUSTOMER PURCHASE ORDER NO	SANDVIK ORDER NO	ITEM	SPECIAL CODE	MARKS	CERTIFICATE DATE
5849799-S-0607	452551		28322	310.5#	11/15/84

SOLD TO: WILLIAMS AND COMPANY INC
PITTSBURGH PA LOUISVILLE KY

SPECIFICATION AND MATERIAL:
AWS A-5.9
ASME SFA-5.9
SANDVIK STAINLESS STEEL WELDING WIRE TYPE ER 309 3/32" x 60

Filler Metal Analysis, %

Heat	C	Si	Mn	P	S	Cr	Ni
S464850	.058	.42	1.84	.008	.019	23.26	12.86

Mo	Cb/Nb	Ta	Ti	Cu
.02	.01	.01	.06	.027

For Bengt H. Berg, Manager, Product Quality and Metallurgy

(W-B-A-1, REV. 8)

QA APPROVED DEC 17 '85

SL 5030

02150

MATERIAL CERTIFICATE

SANDVIK STEEL CO.
P.O. BOX 1220, SCRANTON, PA. 18501 PH: 717 - 587-5191
PLANT LOCATION: INTERSTATE 81, WAVER EXIT 59

CUSTOMER PURCHASE ORDER NO.	SANDVIK ORDER NO.	ITEM	SPECIAL CODE	MARKS	CERTIFICATE DATE
02150-04-S0107	551217		29483	1046.9#	7/9/85

SOLD TO: WILLIAMS AND COMPANY INC
PITTSBURGH PA

SPECIFICATION AND MATERIAL:
AWS A-5.9

SANDVIK STAINLESS STEEL WELDING WIRE TYPE ER 308 3/32" x 60

Filler Metal Analysis, %

Heat	C	Si	Mn	P	S	Cr	Ni
S7A3106	.066	.42	1.66	.018	.014	19.96	9.30

Mo	Cb/Nb	Ta	Ti	Cu
.16	.01	.01	.01	.08

For Bengt H. Berg, Manager, Product Quality and Metallurgy

15 Judith Hallenbeck (W-B-A-1, REV. 8) jh

JUL 12 '85

SL 5030

MATERIAL CERTIFICATE

SANDVIK STEEL CO.
P.O. BOX 1220, SCRANTON, PA. 18501 PH: 717 - 587-5191
PLANT LOCATION: INTERSTATE 81, WAVERLY EXIT 59

CUSTOMER PURCHASE ORDER NO.	SANDVIK ORDER NO.	ITEM	SPECIAL CODE	MARKS	CERTIFICATE DATE
M 36832-0107	652451			220#	9/11/86

SOLD TO: WILLIAMS AND COMPANY INC
PITTSBURGH PA

TOOLING SPECIALTIES INC
LATROBE PA

SPECIFICATION AND MATERIAL:

SANDVIK FLUX TYPE 34WF FOR STRIP ELECTRODES

Lot 1107

This is to certify that, as contained in Sandvik's records, the contents of this certificate are correct and accurate, and that the material is as stated above.

For Bengt H. Berg, Manager, Product Quality and Metallurgy

(W-S-4, REV. 3) jn

SL 5030

CUSTOMER COPY NO 2

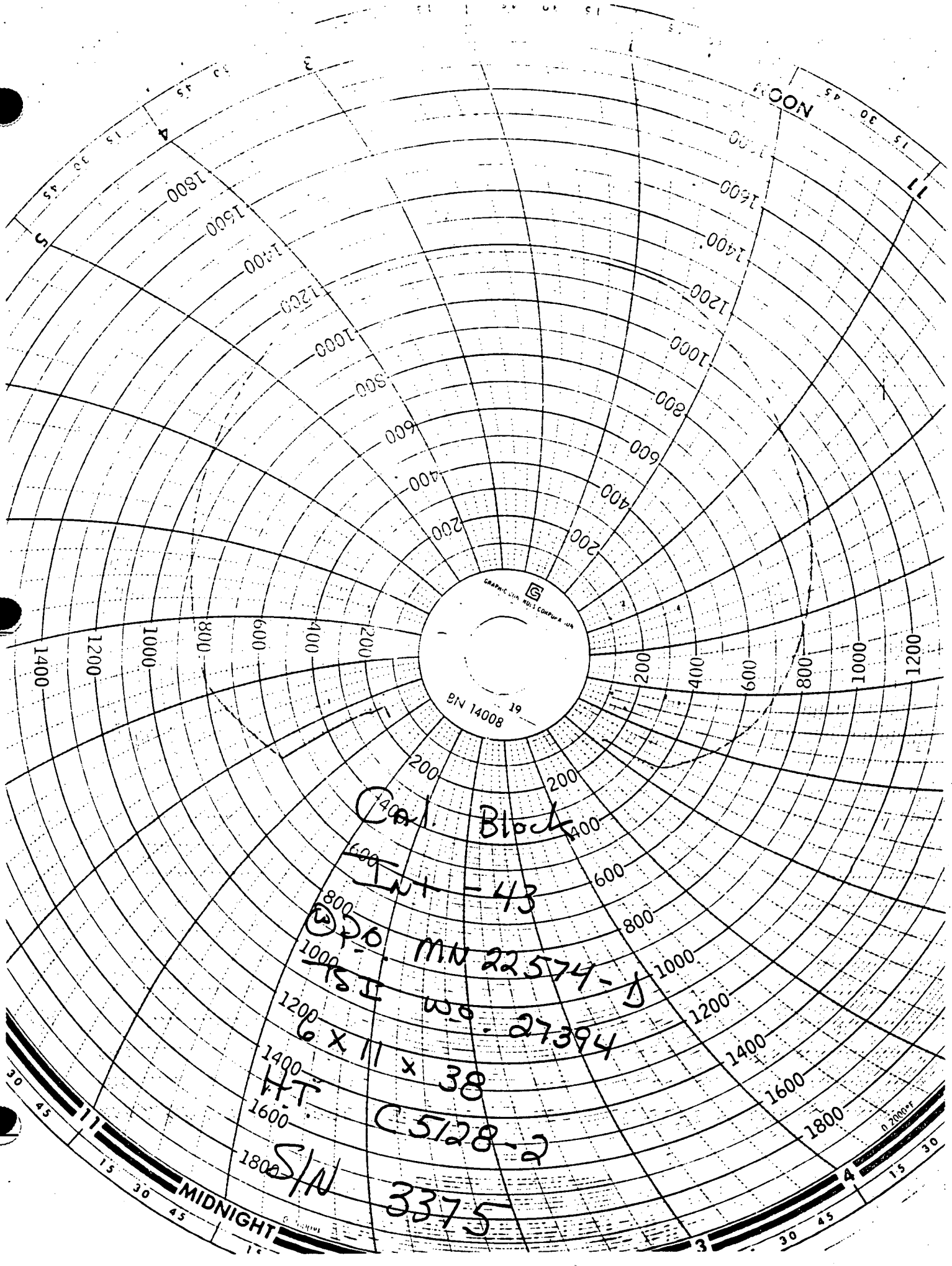
NOON
MIDNIGHT
BN 14008
Cal. Block
INT-43
Ⓢ P.O. MN 22574-J
15 II WO. 27394
6 X 11 X 38
HT. C5128-2
S/N 3375

INSPECTION REPORT

Page 1 of 1

TOOLING SPECIALISTS, INC.
Latrobe, Pa. 15650
Phone: (412) 539-2534

Dwg. # INT-203
Revision —
Item —
P. O. # S/N 001, Item 004 MN-22574-D
Work Order # 27394

CUSTOMER: WNES

PART DESCRIPTION: (1) Calibration Block, INT-43, 11.0" T X 38.0" L X 6.0" W, Heat No. C5128-2

IF OUT OF TOLERANCE, PLACE X IN BOX TO RIGHT OF DIMENSION.

DRAWING DIMENSIONS	Part No. X INT-43	Part No. X	Part No. X	Part No. X	Part No. X	~~Part No.~~ X Gage No.
6.0" W	6.005"					149
3.0" To notches	3.000"					142
(2) 2" Long notches	2.000"					142
(2) .250 wide notches	.234"					142
(2) .22" deep thru clad into pure metal, Notches	.220"					69
90° ±2° Typical 6 Holes	90°					159
Block I.D. Location	OK					Visual
0.219 Clad Thickness	.29"					169
11.0" T	11.03"					Scale
8.25" To "A" + "D" Holes	8.256"					142
5.5" To "B" + "E" Holes	5.504"					142
2.75" To "C" + "F" Holes	2.755"					142
2.75" To "A" hole	2.755"					142
5.5" To "C" hole	5.504"					142
8.25" To B hole	8.260"					142
5.5" To "D" "E" + "F" holes	5.504"					142
38.0" L	38.03"					Scale
holes "A" Thro "F" 3" deep	3.025"					69
holes "A" Thro "F" 0.437" ⌀	.437"					142
Notes	OK					
Clad Direction	OK					
5.5" To notches	5.505"					

INSPECTOR: Wayne A. Jones 4-23-87

RECEIVING INSPECTOR:

NEW YORK POWER AUTHORITY
INDIAN POINT NUCLEAR POWER PLANT
UNIT NO. 3
CALIBRATION BLOCKS

INDIAN POINT UNIT NO. 3 DESIGNATION	:	INT-44
COMPONENT/SYSTEM	:	REACTOR VESSEL NOZZLE INSIDE RADIUS
SIZE/SCHEDULE	:	9.0"T X 40.0"L X 6.0"W
MATERIAL	:	SA533 GRADE B CLASS 1 CARBON STEEL
HEAT OR IDENTITY NUMBER	:	C5128-2

ASME SECTION V AND XI 1983 EDITION THROUGH SUMMER 1983 ADDENDA REQUIREMENTS:

1. Section V : T-110 and T-434
2. Material : SA302 Grade B Carbon Steel
3. Size/Schedule: 9.0"T x 27.0"L x 6.0"W

WESTINGHOUSE ELECTRIC CORPORATION - NSID - INSPECTION SERVICE DESIGN:

Calibration block was designed to requirements of ASME Section V and XI 1983 Edition through Summer 1983 Addenda and utilizing equivalent P-Number Groupings for Materials SA302 Grade B Carbon Steel and SA533 Grade B Class 1 Carbon Steel.

RECOMMENDATION:

None.

NOTES:
1. BLOCK SURFACE FINISH: 125 RMS MINIMUM EXCEPT SURFACE "A".
2. HEAT TREAT BLOCK TO 1150°F. RATE OF HEATING ABOVE 600°F NOT TO EXCEED 100°F PER HOUR. HOLD FOR 3 HOURS MINIMUM. FURNACE COOL TO 600°F AT A RATE OF COOLING NOT TO EXCEED 100°F PER HOUR.
3. STAMP BLOCK HEAT NO. AND ID ON SURFACE "A".
4. CLAD MATERIAL: 308/309 STAINLESS STEEL
5. CLAD DEPOSITION: AUTOMATICALLY APPLIED (SAW PROCESS) PER PROCEDURE TSI-C99-946.
6. SURFACE "A" SHALL REMAIN ESSENTIALLY AS CLAD WITH A LIGHT BLENDING OF SURFACE IRREGULARITIES ONLY.

TOLERANCES:
7. NOTCH LENGTH ± 1/16".
8. NOTCH WIDTH +0 -1/16".
9. NOTCH DEPTH +10% -20%.
10. NOTCH PERPENDICULARITY ±2%.
11. HOLE DEPTH +1/8" -0
12. HOLE DIAMETER ±1/32".
13. HOLE LOCATION THROUGH THE THICKNESS ± 1/8".
14. CLAD THICKNESS +1/8" -0.
15. CLAD SURFACE TO BE AS CLADDED, WIRE BRUSHED AND CLEANED.
16. ALL OTHER DIMENSIONS ±1/16".
17. APPLICABLE TO SECTION XI 1983 EDITION THRU SUMMER 1983 ADDENDA

• MINIMUM DIMENSION

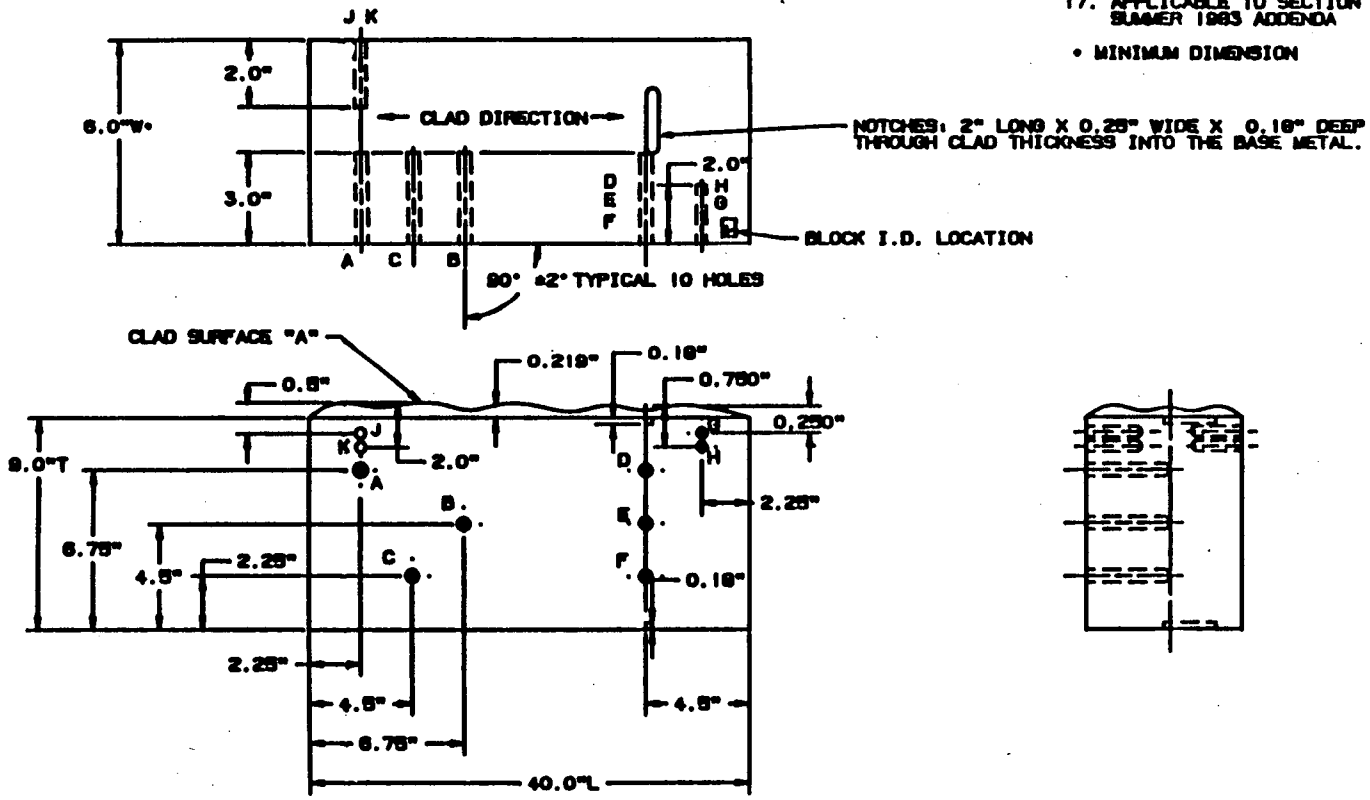

HOLES A THRU F 3" DEEP X 0.375" DIAMETER.
HOLES G,H,J & K 2" DEEP X 0.125" DIAMETER.

COMPUTER SYSTEM PLANT MODELING

NSSD TECHNICAL APPROVAL Lane E. Markle	07-21-87	Westinghouse Electric Corporation PLANT ENGINEERING DIVISION - PITTSBURGH, PA
LEVEL III APPROVAL	7-21-87	TITLE CALIBRATION BLOCK INT-44 REACTOR VESSEL NOZZLE INSIDE RADIUS 9.0"T X 40.0"L X 6.0"W SA 533 GRADE B CLASS 1 CARBON STEEL HEAT NO.: C8128-2
PRODUCT ASSURANCE APPROVAL	7/27/87	
PRODUCT LINE APPROVAL	7/29/87	SIZE C SK. NO. INT-204 REV. 0

REVISION

Nuclear Services Integration Division

QUALITY RELEASE

QR- 12224 REV. 0

PURCHASE ORDER	PART NAME	DRAWING & REV
MN 22574D	CALIBRATION BLOCKS	—

PAR NO	CHG NOTICE NO.	P.O ITEM NO.	PROJ./S.O. NO	QTY. ON ORDER	QTY. RELEASED
N/A	PRCN 002	001, 002, 004		4	3

SUPPLIER	E. SPEC. & REV.	ORDER
TOOLING SPECIALISTS INC	N/A	COMPLETE ☐ YES ☒ NO

SERIAL OR IDENTIFICATION NOS.

BLOCK NOS INT-44, -45, -43

HEAT NO (BASE MAT'L): E5128

The equipment shown hereon is released by W Quality Assurance. Shipment may be made subject to authorization by W Purchasing. In the Audit Checklist below, an A indicates acceptability, a C indicates a contingency and a W indicates that W QA has waived the auditing or witnessing of the attribute. All non-applicable items are lined out.

AUDIT CHECKLIST

- [A] Material Certifications — ATTACHED
- [A] Heat Treat Records — ATTACHED
- [ ] ~~RT Film and Records~~
- [ ] ~~PT/MT Records~~
- [A] Visual
- [A] Dimensional — ATTACHED
- [ ] ~~UT Records~~
- [ ] ~~Personnel Qualification: Welding, NDT~~
- [A] C of C
- [ ]
- [ ] ~~Non-Operating Electrical Tests~~
- [ ] ~~Operating Electrical Test~~
- [ ] ~~Pressure Test~~
- [ ] ~~Seat Tightness Test~~
- [ ] ~~Performance Test~~
- [A] Cleanliness
- [A] Packaging
- [ ] ~~Code Form~~
- [ ] ~~Painting~~
- [ ]

RECEIVED MAY 7 1987 REACTOR SERVICES

DEVIATION NOTICES AND REMARKS (ALL DEVIATIONS HAVE BEEN APPROVED BY THE RESPONSIBLE WESTINGHOUSE ENGINEER UNLESS A SPECIFIC EXCEPTION IS STATED)

DRAWINGS SUPPLIED HAVE NO DWG NO

THE SUPPLIER CERTIFIES that for the equipment and material released, all contractual requirements have been met. Approved deviations, if any, are listed above.

SUPPLIER SIGNATURE: Thomas D Shown DATE: 4/24/87

TITLE: Manager Special Products

The equipment shown hereon is released by Quality Assurance. Shipment may be made subject to authorization by Purchasing.

The equipment supplier has certified that the equipment above meets all requirements of the purchase order, drawings and specifications. Westinghouse has reviewed evidence supporting this release and except as specified above has detected no deviations from such requirements. This release does not waive any rights Westinghouse may have under the purchase order including Westinghouse's right to reject the equipment upon discovery of any such deviations after arrival at destination.

B Schumak 4/24/87

Westinghouse Quality Assurance Representative

NSID 1010 11-84

REQUISITIONER

TOOLING SPECIALISTS, INC.

CERTIFICATION LETTER OF COMPLIANCE

TO: Westinghouse Electric Corp.
Nuclear Energy Systems
P. O. Box 355
Pittsburgh PA 15230

DATE: April 24, 1987

Tooling Specialists, Inc. certifies that all purchase order requirements have been met for the following equipment and material. Any deviations from the order requirements have had Westinghouse NES approval prior to shipment. Deviation Notice (D/N) numbers applicable are _____ (N/A if not applicable).

Westinghouse Purchase Order Number MN 22574-D
P.O. Change Notice number (s) C/N-2
Procurement Advisory Release (PAR) number (s) _____

Quantity	P.O. Item #	DWG. or Sketch and Rev. #		Base Mat'l & Heat #	Weld Joining Mat'l & Heat #	Cladding Mat' and Heat #
			Block			309 S464850
1	001	INT-204	INT-44	C5128-2		308 S7A3106 Flux Lot 1107
1	002	INT-205	INT-45	C5128-2		"
1	004	INT-203	INT-43	C5128-2		"

Weld joining procedure used N/A (include revision #)

cladding procedure used TSI-CSS-846 (include revision #)

heat treating procedure used Westinghouse - Nuclear Energy Systems (include revision #)

One copy each of the following documents as required by the purchase order are attached to this letter. All (including letter) are included with this shipment.

- X Westinghouse Quality Release
- X Base material mill test report (s)
- Weld operator certification
- X Heat treat chart (s)
- X Inspection Report
- Weld joining material mill test report
- X Cladding material mill test report
- X Other Letter of Compliance

One additional copy each of this letter and the above documents are hereby forwarded to the Westinghouse Buyer.

All records supporting this certification letter are available at Tooling Specialists.

Thomas D. Shaw
(signature)

Tooling Specialists, Inc.

PURCHASER:

Combustion Engr., Inc.
10 Mr. S.C. Kiser, Pur. Supv.
911 W. Main St.
Chattanooga, Tenn. 37402

LUKENS STEEL COMPANY
COATESVILLE, PA. 19320

TEST CERTIFICATE

MILL ORDER NO.	CUSTOMER P.O.	
79662-1	44-82880	MP 41575 PN

DATE: 4-16-75 FILE NO. 14-10-02
CONSIGNEE:

THIS MATERIAL HAS BEEN MANUFACTURED AND TESTED IN ACCORDANCE WITH PURCHASE ORDER REQUIREMENTS AND SPECIFICATION(S):

COMB M-P3719(B) 1972 SA-533 Gr. B Cl. 1 Para S2 ASME Code Section 2 & 3 Cl. 1 1971 Edition Thru Winter 1972 Addenda

BEND TEST O.K. HOMOGENEITY TEST CONT. #12773 JOB # 752122 ASME CODE # R-5404

CHEMICAL ANALYSIS

MELT NO.	C	Mn	P	S	Cu	Si	Ni	Cr	Mo	V	Ti	XX	X		BASIC PROCESS
05128	23	1.30	009	005	08	23	62		55	00		FOR	VIP	STEEL	ELEC.
Ck.Slab 2	23	1.33	012	003	08	23	63		53	00					

PHYSICAL PROPERTIES

MELT NO.	SLAB NO.	YIELD PSI X100	TENSILE PSI X100	% ELONG. IN 2"	% R.A.	BHN	IMPACTS				DESCRIPTION
05128	2	82804	955	22							1- 11-3/4" x 101-9/16 x 214-3/8
		88788	955	24							

Plate XXXX furnished in unheat treated condition but stress relieved by heating to 1100°F./1300°F., held 1/2 hr. per inch min., and air cooled.

Tests heated to 1575°F., held 4 hrs. and program cooled per O.K. Cooling Curve for a 11-3/4" Ga. Plate, then tempered 1225°F., held 4 hrs. and air cooled, then stress relieved by heating within a rate of 100°F. per hr. to 1150°F.-450°F., held 40 hrs. and furnace cooled within a rate of 100°F. per hr. to 600°F.

U.T. Testing, Impacts, and Drop Weights were not performed by LUKENS STEEL CO.

Length is major direction of rolling.

R-5404-1
12773
E.J.P.
4/24/75

We hereby certify the above information is correct.

SUPERVISOR-TESTING F. H. Kline

MATERIAL CERTIFICATE 58497

SANDVIK Steel

SANDVIK STEEL CO.
P.O. BOX 220, SCRANTON, PA. 18501 PH: 717 - 587-5191
PLANT LOCATION: INTERSTATE 81, WAVERLY EXIT 59

CUSTOMER PURCHASE ORDER NO	SANDVIK ORDER NO	ITEM	SPECIAL CODE	MARKS	CERTIFICATE DATE
5849799-S-0607	452551		28322	310.5#	11/15/84

SOLD TO: WILLIAMS AND COMPANY INC
PITTSBURGH PA LOUISVILLE KY

SPECIFICATION AND MATERIAL:
AWS A-5.9
ASME SFA-5.9
SANDVIK STAINLESS STEEL WELDING WIRE TYPE ER 309 3/32" x 60

Filler Metal Analysis, %

Heat	C	Si	Mn	P	S	Cr	Ni
S464850	.058	.42	1.84	.008	.019	23.26	12.86

Mo	Cb/Nb	Ta	Ti	Cu
.02	.01	.01	.06	.027

For Bengt H. Berg, Manager, Product Quality and Metallurgy

(W-B-A-1, REV. 8)

QA APPROVED DEC 17 '85

SL 3030

02150

MATERIAL CERTIFICATE

SANDVIK STEEL CO.
P.O. BOX 1220, SCRANTON, PA. 18501 PH: 717 - 587-5191
PLANT LOCATION: INTERSTATE 81, WAVERLY EXIT 59

CUSTOMER PURCHASE ORDER NO.	SANDVIK ORDER NO.	ITEM	SPECIAL CODE	MARKS	CERTIFICATE DATE
02150-04-S0107	551217		29483	1046.9#	7/9/85

SOLD TO: WILLIAMS AND COMPANY INC
PITTSBURGH PA

SPECIFICATION AND MATERIAL:
AWS A-5.9

SANDVIK STAINLESS STEEL WELDING WIRE TYPE ER 308 3/32" x 60

Filler Metal Analysis, %

Heat	C	Si	Mn	P	S	Cr	Ni
S7A3106	.066	.42	1.66	.018	.014	19.96	9.30

Mo	Cb/Nb	Ta	Ti	Cu
.16	.01	.01	.01	.08

For Bengt H. Berg, Manager, Product Quality and Metallurgy

15 Judith Hellenbeck (W-B-A-1, REV. 8) jh

JUL 12 '85

SL 5030

MATERIAL CERTIFICATE

SANDVIK STEEL CO.
P.O. BOX 1220, SCRANTON, PA. 18501 PH: 717 - 587-5191
PLANT LOCATION: INTERSTATE 81, WAVERLY EXIT 59

CUSTOMER PURCHASE ORDER NO.	SANDVIK ORDER NO.	ITEM	SPECIAL CODE	MARKS	CERTIFICATE DATE
M 36832-0107	652451			220#	9/11/86

SOLD TO: WILLIAMS AND COMPANY INC
PITTSBURGH PA

TOOLING SPECIALTIES INC
LATROBE PA

SPECIFICATION AND MATERIAL:

SANDVIK FLUX TYPE 34WF FOR STRIP ELECTRODES

Lot 1107

This is to certify that, as contained in Sandvik's records, the contents of this certificate are correct and accurate, and that the material is as stated above.

For Bengt H. Berg, Manager, Product Quality and Metallurgy

(W-S-4, REV. 3) jb

SL 5030

CUSTOMER COPY NO 2

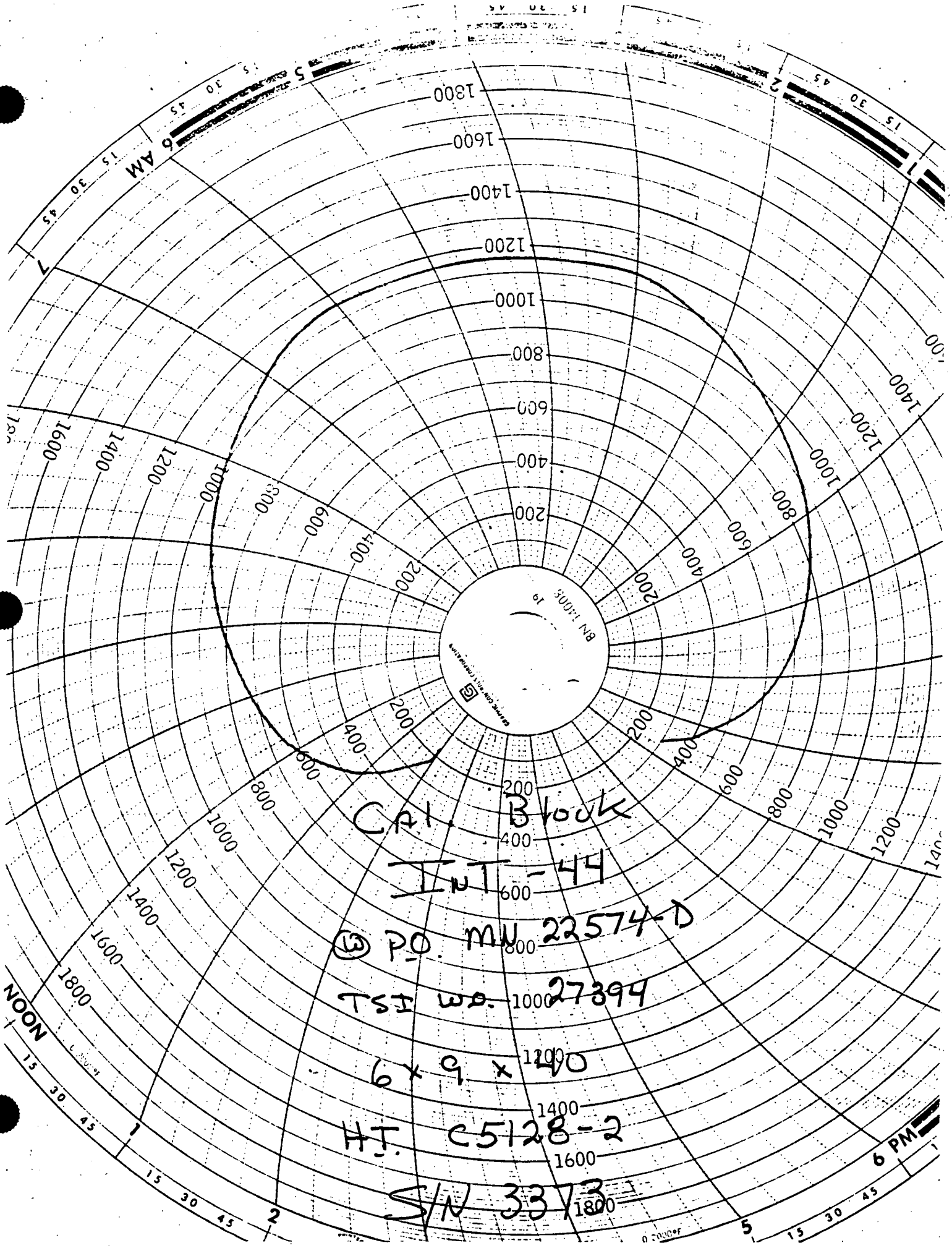
Cal. Block
INT-44
P.O. MN 22574-D
TSI W.O. 27394
6 x 9 x 40
H.T. C5128-2
S/N 3373
NOON
6 AM
6 PM

INSPECTION REPORT

Page 1 of 1

TOOLING SPECIALISTS, INC.
Latrobe, Pa. 15650
Phone: (412) 539-2534

Dwg. # INT-204
Revision —
Item —
P. O. # SN001 Item 001 MN-22574-D
Work Order # 27394

CUSTOMER: W NES

PART DESCRIPTION: (1) Calibration Block INT-44, 9.0"T x 4.0"L x 6.0"W, Heat No. C6128-2

IF OUT OF TOLERANCE, PLACE X IN BOX TO RIGHT OF DIMENSION.

DRAWING DIMENSIONS	Part No. INT-44 X	Part No. X	Part No. X	Part No. X	Part No. X	~~Part No.~~ Gage No
6.0" W	6.002"					142
2.0" = depth "J" & "K" Holes	2.030"					142
2.0" = depth "H" & "G" Holes	2.030"					142
3.0" = depth "A, B, C, D, E & F" Holes	3.030"					142
90° ± 2° Typical 16 holes	90°					159
(6) Holes A thru F, .375"Ø	.375					356
(4) holes "G" "H" "J" & "K" .125"Ø	.124"					359
(2) 2" Long notches	2.000"					142
(2) .25" wide notches	.232"					359
(2) .18 deep notches (Thru clad into Base metal)	.180"					169
Block I.D. Location	OK					Visual
9.0" T	9.00"					Scale
6.75" To "A" & "D" Hole	6.764"					142
4.5" To "B" & "E" Hole	4.510					142
2.25" To "C" & "F" Hole	2.266"					142
0.5" To "J" hole	.455"					142
2.0" To "K" hole	1.953"					142
.250" To "G" hole	.215"					142
.750" To "H" hole	.718"					142
2.25" To "A", "K" & "J" holes	2.252"					142
4.5" To "C" hole	4.502"					142
6.75" To "D" hole	6.752"					142
40.0" L	40.04"					Scale
2.25" To "H" & "G" holes	2.266"					142
4.5" To "F", "E" & "D" holes	4.520"					142
4.5" To Notches	4.505"					142
3.0" To notches	3.000"					142
0.219" Cld Tlk.	.29"					Scale
Notes	OK					

INSPECTOR: Werner J. Jones 4-24-87

RECEIVING INSPECTOR:

NEW YORK POWER AUTHORITY
INDIAN POINT NUCLEAR POWER PLANT
UNIT NO. 3
CALIBRATION BLOCKS

INDIAN POINT UNIT NO. 3 DESIGNATION	:	INT-45
COMPONENT/SYSTEM	:	REACTOR VESSEL BOTTOM HEAD
SIZE/SCHEDULE	:	6.0"T X 21.0"L X 6.0"W
MATERIAL	:	SA533 GRADE B CLASS 1 CARBON STEEL
HEAT OR IDENTITY NUMBER	:	C5128-2

ASME SECTION V AND XI 1983 EDITION THROUGH SUMMER 1983 ADDENDA REQUIREMENTS:

1. Section V : T-110 and T-434
2. Material : SA302 Grade B Carbon Steel
3. Size/Schedule: 6.0"T x 18.0"L x 6.0"W

WESTINGHOUSE ELECTRIC CORPORATION - NSID - INSPECTION SERVICE DESIGN:

Calibration block was designed to requirements of ASME Section V and XI 1983 Edition through Summer 1983 Addenda and utilizing equivalent P-Number Groupings for Materials SA302 Grade B Carbon Steel and SA533 Grade B Class 1 Carbon Steel.

RECOMMENDATION:

None.

NOTES:
1. BLOCK SURFACE FINISH: 125 RMS MINIMUM EXCEPT SURFACE "A".
2. HEAT TREAT BLOCK TO 1150°F. RATE OF HEATING ABOVE 600°F NOT TO EXCEED 100°F PER HOUR. HOLD FOR 3 HOURS MINIMUM. FURNACE COOL TO 600°F AT A RATE OF COOLING NOT TO EXCEED 100°F PER HOUR.
3. STAMP BLOCK HEAT NO. AND ID ON SURFACE "A".
4. CLAD MATERIAL: 309/308 STAINLESS STEEL
5. CLAD DEPOSITION: AUTOMATICALLY APPLIED (SAW PROCESS) PER PROCEDURE TSI-C99-846.
6. SURFACE "A" SHALL REMAIN ESSENTIALLY AS CLAD WITH A LIGHT BLENDING OF SURFACE IRREGULARITIES ONLY.

TOLERANCES:
7. NOTCH LENGTH ± 1/16".
8. NOTCH WIDTH +0 -1/16".
9. NOTCH DEPTH +10% -20%.
10. NOTCH PERPENDICULARITY ±2%.
11. HOLE DEPTH +1/8" -0
12. HOLE DIAMETER ±1/32".
13. HOLE LOCATION THROUGH THE THICKNESS ± 1/8".
14. CLAD THICKNESS +1/8" -0.
15. CLAD SURFACE TO BE AS CLADDED, WIRE BRUSHED AND CLEANED.
16. ALL OTHER DIMENSIONS ±1/16".
17. APPLICABLE TO SECTION XI 1983 EDITION THRU SUMMER 1983 ADDENDA.

• MINIMUM DIMENSION

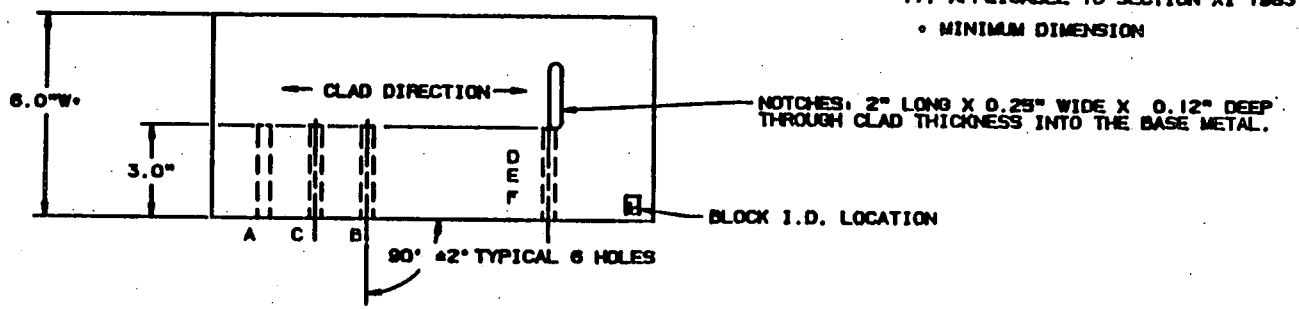

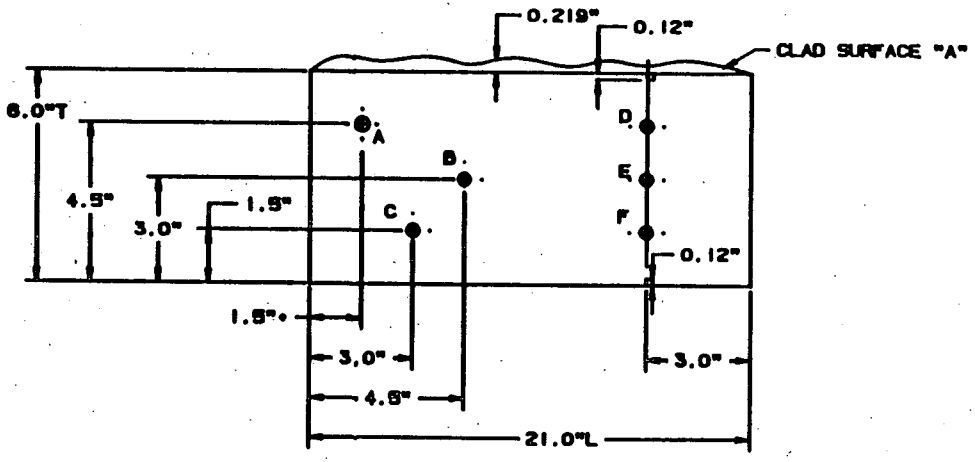

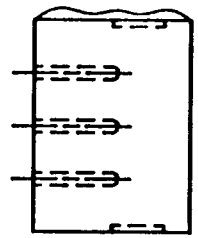

HOLES A THRU F 3" DEEP X 0.260" DIAMETER.

COMPUTER SYSTEM PLANT MODELING

NSSS TECHNICAL APPROVAL Larry E. Mankin	07-21-87	Westinghouse Electric Corporation PLANT ENGINEERING DIVISION - PITTSBURGH, PA
LEVEL III APPROVAL D. Kelly	7-20-87	TITLE CALIBRATION BLOCK INT-49 REACTOR VESSEL BOTTOM HEAD 6.0"T X 21.0"L X 6.0"W SA 533 GRADE B CLASS 1 CARBON STEEL HEAT NO.: CR128-2
PRODUCT ASSURANCE APPROVAL	7/27/87	
PRODUCT LINE APPROVAL	7/29/87	SIZE C DR. NO. INT-205 REV. 0

REVISION

Nuclear Services Integration Division

QUALITY RELEASE

QR- 12224 REV. 0

PURCHASE ORDER	PART NAME	DRAWING & REV.
MN 22574D	CALIBRATION BLOCKS	—

PAR NO.	CHG. NOTICE NO.	P.O. ITEM NO.	PROJ./S.O. NO.	QTY. ON ORDER	QTY. RELEASED
N/A	PRCN 002	001, 002, 004		4	3

SUPPLIER	E. SPEC. & REV	ORDER
TOOLING SPECIALISTS INC	N/A	COMPLETE ☐ YES ☒ NO

SERIAL OR IDENTIFICATION NOS.

BLOCK NOS INT-44, -45, -43

HEAT NO (BASE MATR'L): E5128

The equipment shown hereon is released by W Quality Assurance. Shipment may be made subject to authorization by W Purchasing. In the Audit Checklist below, an A indicates acceptability, a C indicates a contingency and a W indicates that W QA has waived the auditing or witnessing of the attribute. All non-applicable items are lined out.

AUDIT CHECKLIST

☒ A Material Certifications ATTACHED	☐ ~~Non-Operating Electrical Tests~~
☒ A Heat Treat Records ATTACHED	☐ ~~Operating Electrical Test~~
☐ ~~RT Film and Records~~	☐ ~~Pressure Test~~
☐ ~~PT/MT Records~~	☐ ~~Seat Tightness Test~~
☒ A Visual	☐ ~~Performance Test~~
☒ A Dimensional ATTACHED	☒ A Cleanliness
☐ ~~UT Records~~	☒ A Packaging
☐ ~~Personnel Qualification: Welding, NDT~~	☐ ~~Code Form~~
☒ A C of C	☐ ~~Painting~~
☐	☐

RECEIVED MAY 7 1987 REACTOR SERVICES

DEVIATION NOTICES AND REMARKS (ALL DEVIATIONS HAVE BEEN APPROVED BY THE RESPONSIBLE WESTINGHOUSE ENGINEER UNLESS A SPECIFIC EXCEPTION IS STATED.)

DRAWINGS SUPPLIED HAVE NO DWG NO

THE SUPPLIER CERTIFIES that for the equipment and material released, all contractual requirements have been met. Approved deviations, if any, are listed above.

SUPPLIER SIGNATURE Thomas D Shaw DATE 4/24/87

TITLE Manager Special Products

The equipment shown hereon is released by W Quality Assurance. Shipment may be made subject to authorization by W Purchasing.

The equipment supplier has certified that the equipment above meets all requirements of the purchase order, drawings and specifications. Westinghouse has reviewed evidence supporting this release and except as specified above has detected no deviations from such requirements. This release does not waive any rights Westinghouse may have under the purchase order including Westinghouse's right to reject the equipment upon discovery of any such deviations after arrival at destination.

B Shumak 4/24/87

Westinghouse Quality Assurance Representative

NSID 1010 11-84

REQUISITIONER

TOOLING SPECIALISTS, INC.

CERTIFICATION LETTER OF COMPLIANCE

TO: Westinghouse Electric Corp.
Nuclear Energy Systems
P. O. Box 355
Pittsburgh PA 15230

DATE: April 24, 1987

Tooling Specialists, Inc. certifies that all purchase order requirements have been met for the following equipment and material. Any deviations from the order requirements have had Westinghouse NES approval prior to shipment. Deviation Notice (D/N) numbers applicable are _____ (N/A if not applicable).

Westinghouse Purchase Order Number MN 22574-D
P.O. Change Notice number (s) C/N-2
Procurement Advisory Release (PAR) number (s) _____

Quantity	P.O. Item #	DWG. or Sketch and Rev. #		Base Mat'l & Heat #	Weld Joining Mat'l & Heat #	Cladding Mat' and Heat #
			Block			309 S464850
1	001	INT-204	INT-44	C5128-2		308 S7A3106 Flux Lot 1107
1	002	INT-205	INT-45	C5128-2		"
1	004	INT-203	INT-43	C5128-2		"

weld joining procedure used N/A (include revision #)

cladding procedure used TSI-CSS-846 (include revision #)

heat treating procedure used Westinghouse - Nuclear Energy Systems (include revision #)

One copy each of the following documents as required by the purchase order are attached to this letter. All (including letter) are included with this shipment.

- X Westinghouse Quality Release
- X Base material mill test report (s)
- Weld operator certification
- X Heat treat chart (s)
- X Inspection Report
- Weld joining material mill test report
- X Cladding material mill test report
- X Other Letter of Compliance

One additional copy each of this letter and the above documents are hereby forwarded to the Westinghouse Buyer.

All records supporting this certification letter are available at Tooling Specialists.

Thomas D. Shearer
(signature)

Tooling Specialists, Inc.

PURCHASER:

Combustion Engr., Inc.
10 Mr. S.G. Kiser, Pur. Supv.
911 W. Main St.
Chattanooga, Tenn. 37402

LUKENS STEEL COMPANY
COATESVILLE, PA. 19320

TEST CERTIFICATE

MILL ORDER NO.	CUSTOMER P.O.	
79662-1	44-82880	MP 41578 JW

DATE: 4-16-75 FILE NO. 14-10-02

CONSIGNEE:

THIS MATERIAL HAS BEEN MANUFACTURED AND TESTED IN ACCORDANCE WITH PURCHASE ORDER REQUIREMENTS AND SPECIFICATION(S):

COMB M-P3719(B) 1972 SA-533 Gr. B Cl. 1 Para 82 ASME Code Section 2 & 3 Cl. 1 1971 Edition Thru Winter 1972 Addenda

BEND TEST O.K. HOMOGENEITY TEST CONT. #12773 JOB # 752122 ASME CODE # R-5404

CHEMICAL ANALYSIS

MELT NO.	C	MN	P	S	CU	SI	NI	CR	MO	V	TI	KX	X		BASIC PROCESS
05128	23	1.30	009	005	08	23	62		55	00		FUP	VIP STEEL		KLEO.
Ck. Slab 2	25	1.33	012	003	08	23	63		55	00					

PHYSICAL PROPERTIES

MELT NO.	SLAB NO.	YIELD PSI X100	TENSILE PSI X100	% ELONG. IN 2"	% R.A.	BHN	IMPACTS				DESCRIPTION
05128	2	7804	955	22							1- 11-3/4" x 101-5/16 x 214-3/8
		7788	955	24							

Plate XXXX furnished in unheat treated condition but stress relieved by heating to XXXXXXXXX 1100°F./1300°F., held 1/2 hr. per inch min., and air cooled.

Tests heated to 1575°F., held 4 hrs. and program cooled per G.E. Cooling Curve for a 11-3/4" Ga. Plate, then tempered 1225°F., held 4 hrs. and air cooled, then stress relieved by heating within a rate of 100°F. per hr. to 1150°F.-850°F., held 40 hrs. and furnace cooled within a rate of 100°F. per hr. to 600°F.

U.T. Testing, Impacts, and Drop Weights were not performed by LUKENS STEEL CO.

Length is major direction of rolling.

R-5404-1

12773

E.P. 4/24/75

We hereby certify the above information is correct.

SUPERVISOR-TESTING F.H. Kline

MATERIAL CERTIFICATE 58497

SANDVIK Steel

SANDVIK STEEL CO.
P.O. BOX 1220, SCRANTON, PA. 18501 PH: 717 - 587-5191
PLANT LOCATION: INTERSTATE 81, WAVERLY EXIT 59

CUSTOMER PURCHASE ORDER NO	SANDVIK ORDER NO	ITEM	SPECIAL CODE	MARKS	CERTIFICATE DATE
5849799-S-0607	452551		28322	310.5#	11/15/84

SOLD TO: WILLIAMS AND COMPANY INC
PITTSBURGH PA LOUISVILLE KY

SPECIFICATION AND MATERIAL:
AWS A-5.9
ASME SFA-5.9
SANDVIK STAINLESS STEEL WELDING WIRE TYPE ER 309 3/32" x 60

Filler Metal Analysis, %

Heat	C	Si	Mn	P	S	Cr	Ni
S464850	.058	.42	1.84	.008	.019	23.26	12.86

Mo	Cb/Nb	Ta	Ti	Cu
.02	.01	.01	.06	.027

For Bengt H. Berg, Manager, Product Quality and Metallurgy

(W-B-A-1, REV. 8)

SI APPROVED DEC 17 '85

SL 5030

02150

MATERIAL CERTIFICATE

SANDVIK STEEL CO.
P.O. BOX 1220, SCRANTON, PA. 18501 PH: 717 - 587-5191
PLANT LOCATION: INTERSTATE 81, WAVERLY EXIT 59

CUSTOMER PURCHASE ORDER NO.	SANDVIK ORDER NO.	ITEM	SPECIAL CODE	MARKS	CERTIFICATE DATE
02150-04-S0107	551217		29483	1046.9#	7/9/85

SOLD TO: WILLIAMS AND COMPANY INC
PITTSBURGH PA

SPECIFICATION AND MATERIAL:
AWS A-5.9

SANDVIK STAINLESS STEEL WELDING WIRE TYPE ER 308 3/32" x 60

Filler Metal Analysis, %

Heat	C	Si	Mn	P	S	Cr	Ni
S7A3106	.066	.42	1.66	.018	.014	19.96	9.30

Mo	Cb/Nb	Ta	Ti	Cu
.16	.01	.01	.01	.08

For Bengt H. Berg, Manager, Product Quality and Metallurgy

15 Judith Hallenbeck (W-B-A-1, REV. 8) jh

JUL 12 '85

SL 5030

MATERIAL CERTIFICATE

SANDVIK STEEL CO..
P.O. BOX 1220, SCRANTON, PA. 18501 PH: 717 - 587-5191
PLANT LOCATION: INTERSTATE 81, WAVERLY EXIT 59

CUSTOMER PURCHASE ORDER NO.	SANDVIK ORDER NO.	ITEM	SPECIAL CODE	MARKS	CERTIFICATE DATE
M 36832-0107	652451			2204	9/11/86

SOLD TO: WILLIAMS AND COMPANY INC
PITTSBURGH PA

TOOLING SPECIALTIES INC
LATROBE PA

SPECIFICATION AND MATERIAL:

SANDVIK FLUX TYPE 34WF FOR STRIP ELECTRODES

Lot 1107

This is to certify that, as contained in Sandvik's records, the contents of this certificate are correct and accurate, and that the material is as stated above.

For Bengt H. Berg, Manager, Product Quality and Metallurgy

(W-S-4, REV. 3) jh

SL 5030

CUSTOMER COPY NO 2

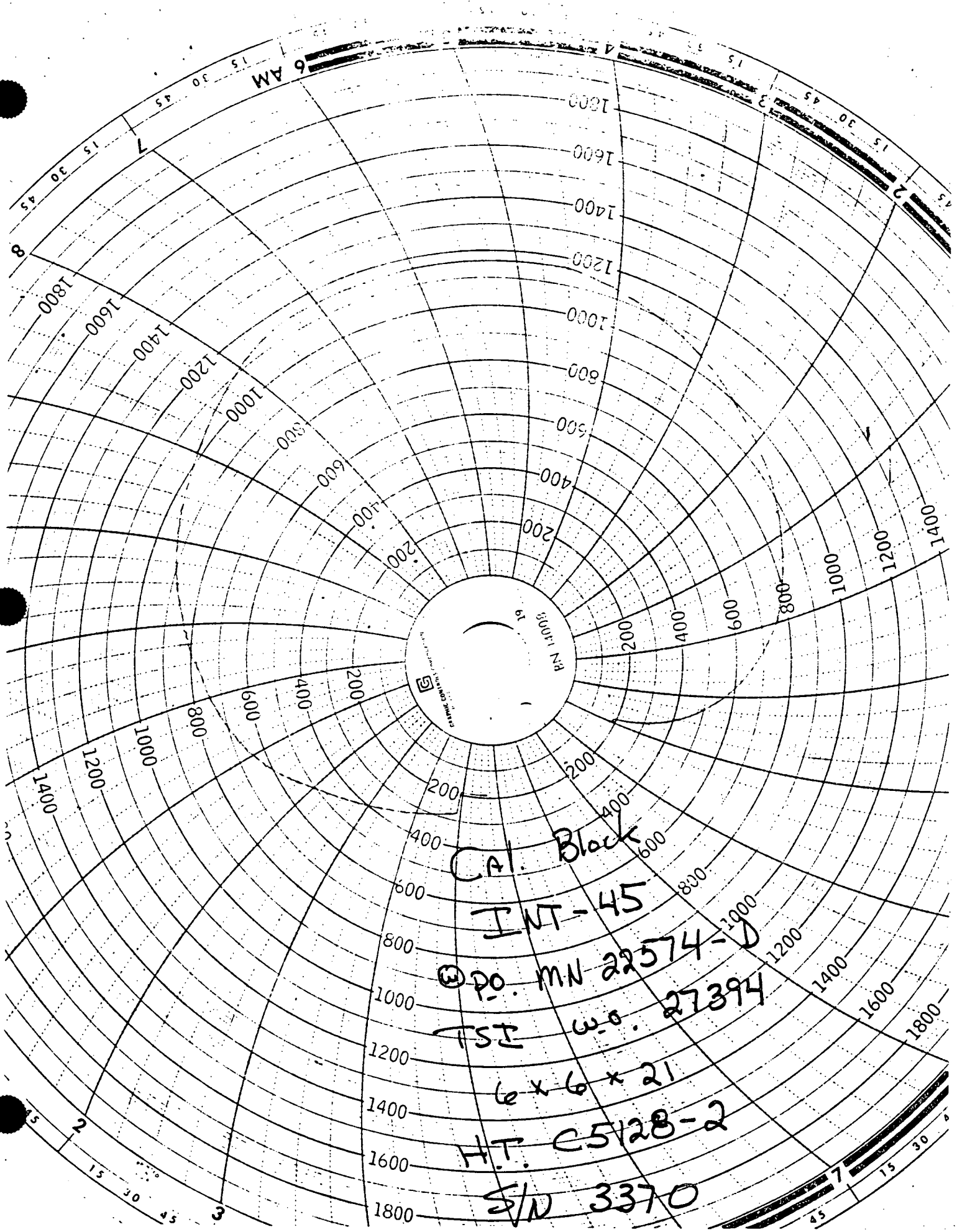
Cal. Block
INT-45
PO. MN 22574-D
TSI W.O. 27394
6 x 6 x 21
H.T. C5128-2
S/N 3370

INSPECTION REPORT

Page 1 of 1

TOOLING SPECIALISTS, INC.
Latrobe, Pa. 15650
Phone: (412) 539-2534

Dwg. # INT-205
Revision —
Item —
P. O. # 9N001, Item 007 MN-22574-0
Work Order # 27394

CUSTOMER: WNES

PART DESCRIPTION: (1) Calibration Block, INT-45, 6.0"T X 21.0"L X 6.0"W, Heat No. C5128-2

IF OUT OF TOLERANCE, PLACE X IN BOX TO RIGHT OF DIMENSION.

DRAWING DIMENSIONS	Part No. X INT-45	Part No. X	Part No. X	Part No. X	Part No. X	~~Part No.~~ Gage No
6.0" W	6.012"					149
3.0" To notches	3.000"					142
(2) 2" Long notches	2.000"					142
(2) .250 Wide notches	.231"					359
(2) 0.12" Deep Thru clad into base metal notches	.119"					169
90° ± 2° Typical 6 Holes	90°					159
6.0" T	6.03"					Scale
Block I.D. Location	OK					Visual
4.5" To "B" hole	4.500"					142
3.0" To "B" & "E" hole	3.008"					142
1.5" To "C" & "F" hole	1.500"					142
0.219" Clad Thickness	.29"					Scale
1.5" To "A" hole	1.525"					142
3.0" To "C" hole	3.000"					142
4.5" To "B" hole	4.500"					142
3.0" To notches	3.000"					142
3.0" To F, E & D holes	3.000"					142
21.0" L	21.03"					Scale
Holes "A" Thru "F" 3.0" deep	3.030"					142
Holes "A" Thru "F" .250 ⌀	.250"					359
Notes	OK					
Clad direction	OK					Visual

INSPECTOR: Werner J. Jones 4-24-87

RECEIVING INSPECTOR:

WESTINGHOUSE–NUCLEAR ENERGY SYSTEM

SHOP ORDER | COMPANY

0 0 0 0 0 0 0 0 0 0 0 0 0
1 2 3 4 5 6 7 8 9 10 11 12 13
1 1 1 1 1 1 1 1 1 1 1 1 1
2 2 2 2 2 2 2 2 2 2 2 2 2
3 3 3 3 3 3 3 3 3 3 3 3 3
4 4 4 4 4 4 4 4 4 4 4 4 4
5 5 5 5 5 5 5 5 5 5 5 5 5
6 6 6 6 6 6 6 6 6 6 6 6 6
7 7 7 7 7 7 7 7 7 7 7 7 7
8 8 8 8 8 8 8 8 8 8 8 8 8
9 9 9 9 9 9 9 9 9 9 9 9 9
1 2 3 4 5 6 7 8 9 10 11 12 13

MMM 11906 FILMSO

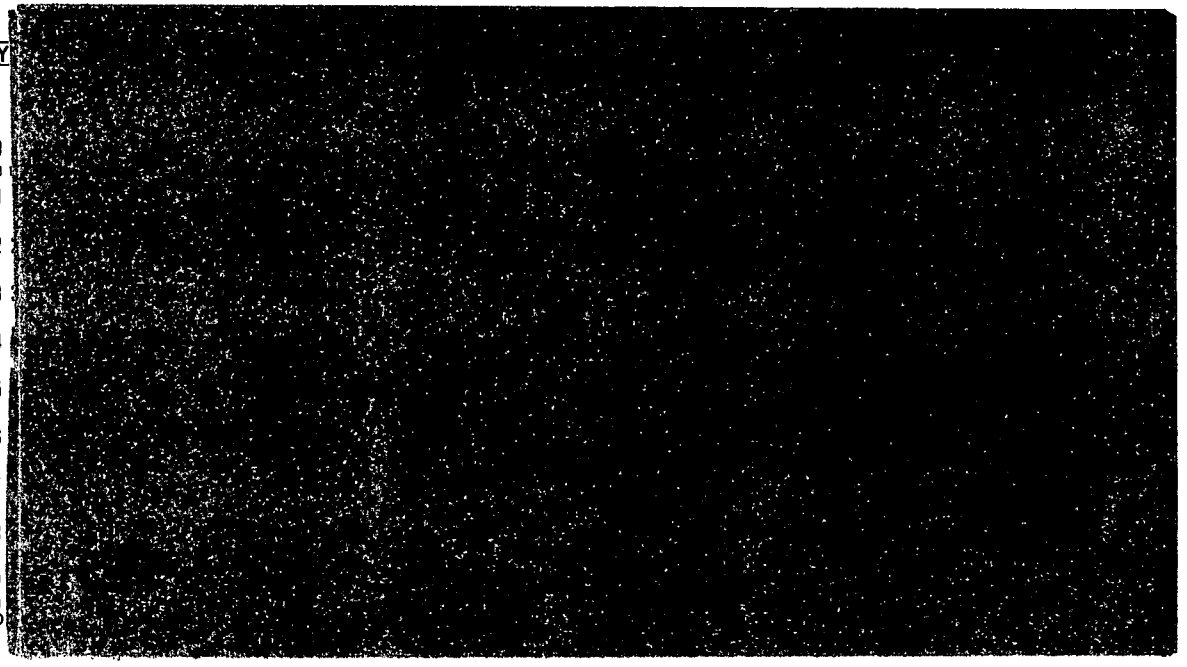

INT-45

NEW YORK POWER AUTHORITY
INDIAN POINT NUCLEAR POWER PLANT
UNIT NO. 3
CALIBRATION BLOCKS

INDIAN POINT UNIT NO. 3 DESIGNATION	:	INT-46
COMPONENT/SYSTEM	:	REACTOR VESSEL NOZZLE TO SAFE-END AND REACTOR COOLANT PIPE TO SPOOL
SIZE/SCHEDULE	:	2.5"T X 18.5"L X 6.0"W
MATERIAL	:	A508 CLASS 2 CARBON STEEL; A351-65-CF8A FORGING; TP 316 STAINLESS STEEL
HEAT OR IDENTITY NUMBER	:	31-3212; 57128; K57396

ASME SECTION V AND XI 1983 EDITION THROUGH SUMMER 1983 ADDENDA REQUIREMENTS:

1. Section V : T-110 and T-548
2. Section XI : Article III-1100, Supplement 7 and IMA-2250
3. Material : A508 Class 2 Carbon Steel; A351-65-CF8A Forging; TP 316 Stainless Steel

WESTINGHOUSE ELECTRIC CORPORATION - NSID - INSPECTION SERVICE DESIGN:

Calibration block was designed to meet intent of the ASME Boiler and Pressure Vessel Code Section V and XI 1983 Edition through Summer 1983 Addenda for Austenitic Piping.

RECOMMENDATION:

None.

NOTES:

1. APPLICABLE TO SECTION XI 1983 EDITION THRU SUMMER 1983 ADDENDA.

HOLES:

2. FLAT BOTTOM HOLES A,B ,C,H AND I 2.875" DEEP X 0.125" DIAMETER ± 0.03".
3. FLAT BOTTOM HOLES D,E ,F AND G 2.875" DEEP X 0.188" DIAMETER ± 0.03".
4. HOLE DIAMETER THRU THICKNESS TO BE ± 0.06".
5. ETCH SURFACE TO DETERMINE EDGE OF WELD PREP FOR LOCATING THE EDGE OF HOLES A,B,C AND D AS DEPICTED.

NOTCHES:

6. N1,N2,N3,N4,N5 AND N6 ARE 2.875" LONG ±10%.
7. N1,N2 AND N6 ARE 0.104T -0.009T SQUARED INTO BASE METAL.
8. N5 IS 0.104T -0.009T SQUARED INTO BASE METAL.
9. N3 IS 3%T E.D.M.
10. N4 IS 10%T E.D.M.
11. NOTCH WIDTH SHALL BE 0.015" ± 0.005"
12. NOTCH DEPTH +10% -20%
13. NOTCH PERPENDICULARITY ±2%

BLOCK TOLERANCES:

14. BLOCK LENGTH,WIDTH AND THICKNESS TOLERANCES ± 1/16".

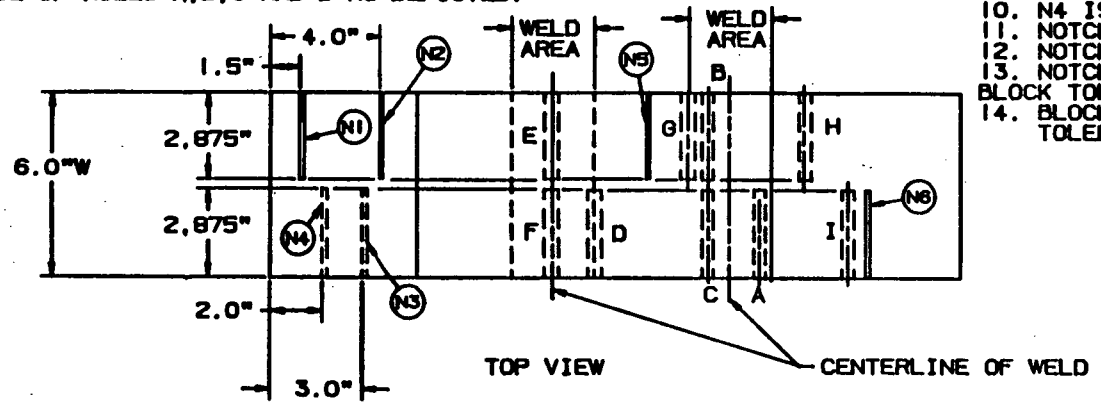

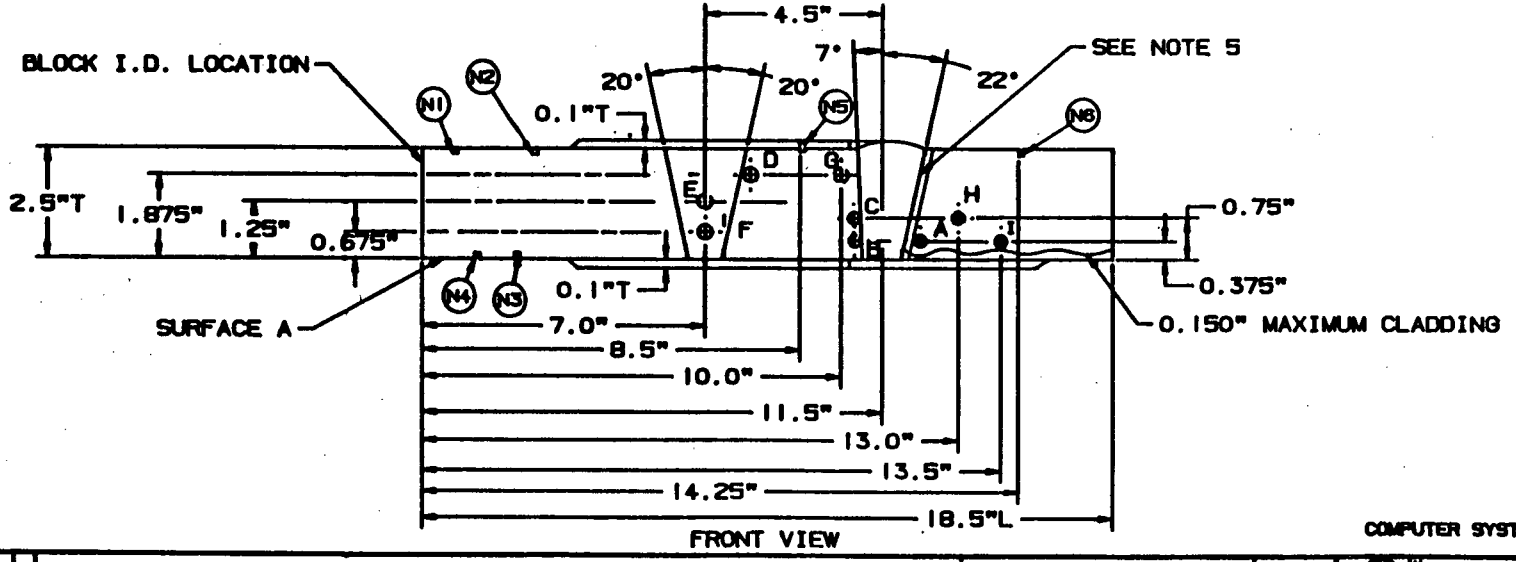

COMPUTER SYSTEM PLANT MODELING

NSSD TECHNICAL APPROVAL Louis E. Markle	07-21-87	Westinghouse Electric Corporation PLANT ENGINEERING DIVISION - PITTSBURGH, PA
LEVEL III APPROVAL	7-27-87	TITLE CALIBRATION BLOCK INT-48 (SH. 1 OF 2) REACTOR VESSEL SAFE-END AND REACTOR COOLANT PIPE TO SPOOL ASME CLASS 2 CARBON STEEL (A-381-65-CFBA FORGING) TP316 STAINLESS STEEL HEAT NO.: 31-3212;57128;K57306
PRODUCT ASSURANCE APPROVAL	7/27/87	
PRODUCT LINE APPROVAL	7/27/87	SIZE C SK. NO. INT-206 REV. 1

REVISION

Ed. d. IT.

NOTES:
1. APPLICABLE TO SECTION XI 1983 EDITION THRU SUMMER 1983 ADDENDA.
2. ALL FLAT SURFACES 250 RMS.
3. CLAD AND OVERLAY SURFACES 125 RMS EQUIVALENT.
4. OVERLAY THICKNESS 0.1"T AFTER PREPARATION.

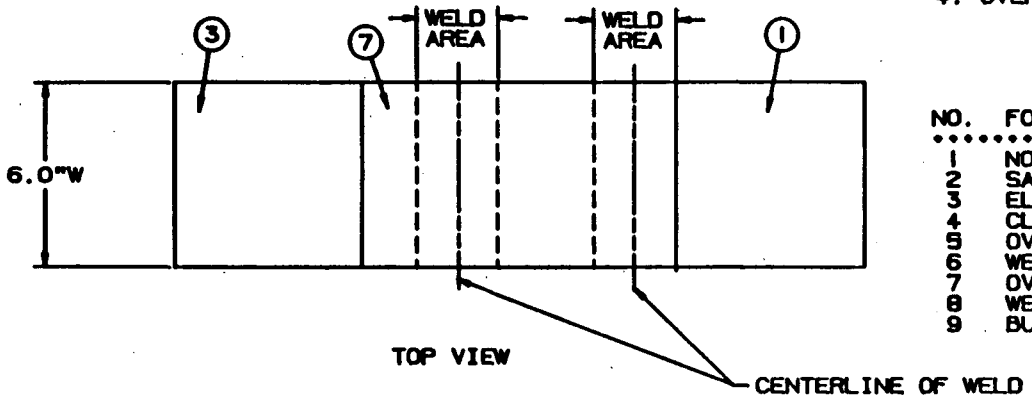

TOP VIEW

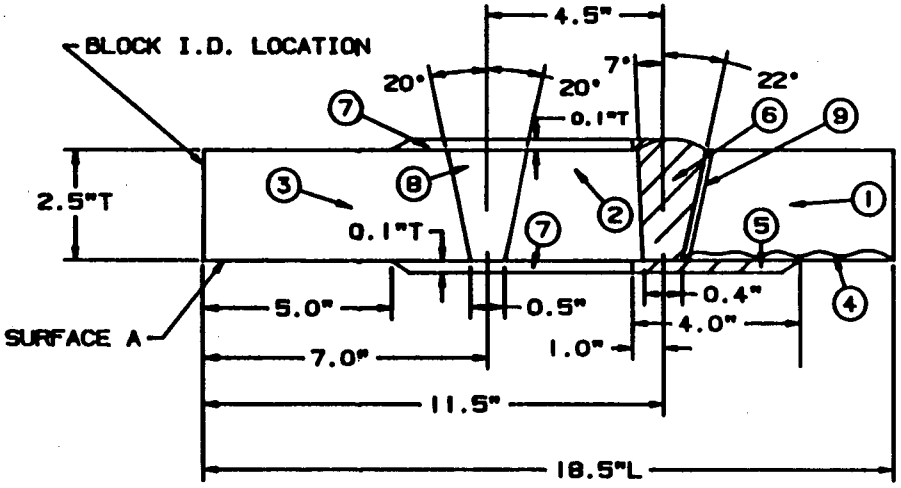

FRONT VIEW

NO.	FORM	PROCESS	TYPE	SPEC.
1	NOZZLE	FORGING	ALLOY STL.	A 508 CL.2
2	SAFE-END	PLATE	STA.STL.	TYPE 316
3	ELBOW	CAST	STA.STL.	A-351- GRCF8A
4	CLADDING	WELD DPT.	STA. STL.	TYPE 308/309
5	OVERLAY	WELD DPT.	INCONEL	SFA-5.11(ENICRFE-3)
6	WELD	WELDED	INCONEL	SFA-5.11(ENICRFE-3)
7	OVERLAY	WELD DPT.	STA. STL.	TYPE 308
8	WELD	WELDED	STA. STL.	TYPE 308(SFA 5.4)
9	BUTTER	WELDED	INCONEL	SFA-511(INICRFE-3) 0.25"T NOMINAL

COMPUTER SYSTEM PLANT MODELING

NSSD TECHNICAL APPROVAL Lawrence E Mauhle	07-21-87	Westinghouse Electric Corporation PLANT ENGINEERING DIVISION - PITTSBURGH, PA
LEVEL III APPROVAL	7-27-87	TITLE CALIBRATION BLOCK INT-46 (SH.2 OF 2) REACTOR VESSEL SAFE-END AND REACTOR COOLANT PIPE TO SPOOL A508 CLASS 2 CARBON STEEL; A-351-GR-CF8A FORGING; TP 316 STAINLESS STEEL HEAT NO.: 31-3212;87126;K67396
PRODUCT ASSURANCE APPROVAL	7/27/87	
PRODUCT LINE APPROVAL	1/24/87	SIZE C DR. NO. INT-206 REV. 1

REVISION

Nuclear Services Integration Division

QUALITY RELEASE

QR- 12219 REV. 0

PURCHASE ORDER	PART NAME	DRAWING & REV.
MN 22574D	INT-46 CALIBRATION BL	INT-206

PAR NO.	CHG. NOTICE NO.	P.O. ITEM NO.	PROJ./S.O. NO.	QTY. ON ORDER	QTY. RELEASED
N/A	PRCN-003	003	INT71 CA429	1	1

SUPPLIER	E. SPEC. & REV.	ORDER
TOOLING SPECIALISTS INC	N/A	COMPLETE ☐ YES ☐ NO

SERIAL OR IDENTIFICATION NOS.

INT-46

The equipment shown hereon is released by W Quality Assurance. Shipment may be made subject to authorization by W Purchasing. In the Audit Checklist below, an A indicates acceptability, a C indicates a contingency and a W indicates that W QA has waived the auditing or witnessing of the attribute. All non-applicable items are lined out.

AUDIT CHECKLIST

☒ Material Certifications (ATTACHED)	~~Non-Operating Electrical Tests~~
☒ Heat Treat Records (ATTACHED)	~~Operating Electrical Test~~
~~RT Film and Records~~	~~Pressure Test~~
~~PT/MT Records~~	~~Seat Tightness Test~~
☒ Visual	~~Performance Test~~
☒ Dimensional (ATTACHED)	☒ Cleanliness
~~UT Records~~	☒ W Packaging
~~Personnel Qualification: Welding, NDT~~	~~Code Form~~
☒ CERT. OF COMPLIANCE	~~Painting~~
☐	☐

DEVIATION NOTICES AND REMARKS (ALL DEVIATIONS HAVE BEEN APPROVED BY THE RESPONSIBLE WESTINGHOUSE ENGINEER UNLESS A SPECIFIC EXCEPTION IS STATED.)

NSDN-0568

THE SUPPLIER CERTIFIES that for the equipment and material released, all contractual requirements have been met. Approved deviations, if any, are listed above.

SUPPLIER SIGNATURE [illegible] DATE 5/11/87

TITLE [illegible]

The equipment shown hereon is released by Quality Assurance. Shipment may be made subject to authorization by Purchasing.

The equipment supplier has certified that the equipment above meets all requirements of the purchase order, drawings and specifications. Westinghouse has reviewed evidence supporting this release and except as specified above has detected no deviations from such requirements. This release does not waive any rights Westinghouse may have under the purchase order including Westinghouse's right to reject the equipment upon discovery of any such deviations after arrival at destination.

[illegible] 5/11/87

Westinghouse Quality Assurance Representative

NSID 1010 11-84

REQUISITIONER

DEVIATION NOTICE

NUCLEAR SERVICES INTEGRATION DIVISION

NSDN 0568

Sheet _____ of _____

A — TO BE COMPLETED BY ORIGINATOR

(1) Supplier: Tooling Specialists, Inc.	(1) Purchase Order: MN 22574 D c/n 003	(1) Shop Order No.: IN7ICA429
(3) Drawing No./Rev.: INT-206	(3) Specification No./Rev.: N/A	(2) Project(s) N/A
(4) No. Rejected 1 — (4) Attachments ☐ Yes ☒ No	(1) Part Name/Description: INT 46 Calibration Block	

(5) Description of Deviation and Recommendation for Disposition:

No approved TSI welding procedure, qualified in accordance with ASME Section IX, as required by QPR-3 Rev 2, can be identified for welding the SA-508 cl 2 nozzle material to the 316 S S safe-end plate. Although a qualification record is present it is unclear whether the procedure as originally prepared was for buttering or full penetration joints.

Inasmuch as this joint was made with weld preps identified in Westinghouse drawings, buttered and completed with Inco 182 filler and is not a stress joint, accept-as-is, is recommended. Weld appearance as-finished is excellent.

(USE CONTINUATION FORM 55255)

(6) Supplier Recommendation to Prevent Recurrence: Weld procedures will be reviewed and revised as necessary to meet ASME requirements.

(4) Originators Signature/Title/Date: Paul M. Pottinger, QA Manager 5-11-87

B — TO BE COMPLETED BY WESTINGHOUSE

(7) Comments/Instructions Supporting Disposition:

PER CONVERSATIONS WITH TOOLING SPECIALISTS INC, PROCEDURE PDM 9348NS HAS APARENTLY BEEN LOST, HOWEVER, A PROCEDURE QUALIFICATION RECORD ALONG WITH SUPPORTING TEST DOCUMENTATION IS AVAILABLE IN TSI FILE. FROM THESE AVAILABLE PROCEDURE QUALIFICATION RECORDS, AND ASSURANCES FROM TSI THAT SUBJECT PROCEDURE PARAMETERS HAVE BEEN SATISFIED, THE WELD IS DEEMED ACCEPTABLE. TSI WILL RE-ISSUE THE MISSING PROCEDURE.

(USE CONTINUATION FORM 55255)

(7) EFFECT OF DEVIATION

	YES	NO		YES	NO
Installation/Test	☐	☒	Maintenance Repair	☐	☒
In-Service Inspection	☐	☒	Specification Revision Required	☐	☒
Performance/Function	☐	☒	Future Design Change	☐	☒

(7) DISPOSITION

Accept ☒ Repair ☐ Scrap ☐ Hold and Resubmit ☐

Service Engineering Signature/Date: N/A

Product Line Signature/Date: D. Kurt 5-11-87

P.A. Signature/Date: [illegible] 5/11/87

C

(8) REPAIR COMPLETE: The repair as specified above has been accomplished. The final disposition of this material is:

ACCEPT ☐ N/A SCRAP ☐

(9) Repair Procedure: N/A

(10) P.A. Signature/Date: N/A

Notice to seller: This notice, when properly filled out, approved and signed is notification that the subject deviation is acceptable to Westinghouse to the extent and only for the purpose indicated herein. Such notification does not preclude negotiation of a price reduction in connection herewith at a later date, but it is an approval within the meaning of the general provisions and need not be followed by a change notice to the purchase order.

ENGINEERING SERVICE

NSID 1019 1-1-83

TOOLING SPECIALISTS, INC.

CERTIFICATION LETTER OF COMPLIANCE

TO: Westinghouse Electric Corporation
Nuclear Energy System
P. O. Box 355
Pittsburgh PA 15230

DATE: May 11, 1987

Tooling Specialists, Inc. certifies that all purchase order requirements have been met for the following equipment and material. Any deviations from the order requirements have had Westinghouse NES approval prior to shipment. Deviation Notice (D/N) numbers applicable are 0568 (N/A if not applicable).

Westinghouse Purchase Order Number MN 22574-D
P.O. Change Notice number (s) CN-3
Procurement Advisory Release (PAR) number (s) _____

Quantity	P.O. Item #	DWG. or Sketch and Rev. #	Base Mat'l & Heat #	Weld Joining Mat'l & Heat #	Cladding Ma and Heat #
1	003	INT-46		SEE ATTACHED SHEET	

Weld joining procedure used PDM-9348NS 7/7/76 (include revision #)

cladding procedure used TSI-CSS-846 6/28/84 PDM 9348NS 7/7/76 (include revision #)

heat treating procedure used TSI-CSS-846 6/28/84 (include revision #)

One copy each of the following documents as required by the purchase order are attached to this letter. All (including letter) are included with this shipment.

- X Westinghouse Quality Release
- X Base material mill test report (s)
- Weld operator certification
- X Heat treat chart (s)
- X Inspection Report
- X Weld joining material mill test report
- X Cladding material mill test report
- X Other Letter of Compliance

One additional copy each of this letter and the above documents are hereby forwarded to the Westinghouse Buyer.

All records supporting this certification letter are available at Tooling Specialists.

Thomas D Shearer
(signature)

Tooling Specialists, Inc.

INSPECTION REPORT

Page 1 of 2

TOOLING SPECIALISTS, INC.
Latrobe, Pa. 15650
Phone: (412) 539-2534

Dwg. # 5A1 0# 2 INT-206 | Revision — | Item —
P. O. # Item 003 MN-22574-0 Supl. 002 | Work Order # 27394

CUSTOMER: WNES

PART DESCRIPTION: 1 Calibration Block #INT-46

IF OUT OF TOLERANCE, PLACE X IN BOX TO RIGHT OF DIMENSION.

DRAWING DIMENSIONS	Part No. INT-46	X	Part No.	X	Part No.	X	Part No.	X	Part No.	X	Part No.
All Holes 2.875" Deep	2.880"										
Holes A, B, C, H + I = 0.125 Ø	.124"										
Holes D, E F + G = 0.188 Ø	.187"										
All Notches 2.875 Lg.	2.875"										
N1 = .204 +.02 -.04 Deep	.201"										
N2 = .204 +.02 -.04 Deep	.200"										
N5 = .204 +.02 -.04 Deep	.204"										
N6 = .204 +.02 -.04 Deep	.199"										
N3 = .075 +.007 -.010 Deep	.075"										
N4 = .1250 +.025 -.050 Deep	.250"										
ALL Notch Widths = .015" ±.005	.018"										
6.0" W	6.058"										
1.5" To N1	1.498"										
4.0" To N2	3.497										
2.0" To N4	1.997"										
3.0" To N3	2.998"										
2.5" T	2.520"										
1.875" To D + G Holes	1.876"										
1.25" To E Hole	1.254"										
.675" To F Hole	.672"										
0.75 To C + H Holes	.752"										
0.375 To B, A + I Holes	.378"										
7.0" To E + F Holes	7.0080"										
8.5" To N5	8.485										
10.0" To G Hole	10.002"										
13.0" To H Hole	13.002"										
13.5" To I Hole	13.504"										
14.25" To N6	14.239"										
18.5" L	18.560"										

INSPECTOR: [illegible] 5-8-87

RECEIVING INSPECTOR:

INSPECTION REPORT

Page 2 of 2

TOOLING SPECIALISTS, INC.
Latrobe, Pa. 15650
Phone: (412) 539-2534

Dwg. # 5 1 + 2 INT-206
Revision —
Item —
P. O. # Item 003 MN-22577-0 Sup1.002
Work Order # 27394

CUSTOMER: WNES

PART DESCRIPTION: 1 Calibration Block # INT-46

IF OUT OF TOLERANCE, PLACE X IN BOX TO RIGHT OF DIMENSION.

DRAWING DIMENSIONS	Part No. INT-46	X	Part No.	X	Part No.	X	Part No.	X	Part No.	X	Part No.
(2) 0.1" T	0.1"										
(2) 20°	20°										
7°	7°										
22°	22°										
5.0"	5.0"										
7.0"	7.0"										
0.5"	0.5"										
11.5"	11.5"										
1.0"	1.0"										
4.0"	4.0"										
Block I.D. Location	OK										
.15" max cladding	.15"										

INSPECTOR: Kenneth J. Jones 5-8-87

RECEIVING INSPECTOR:

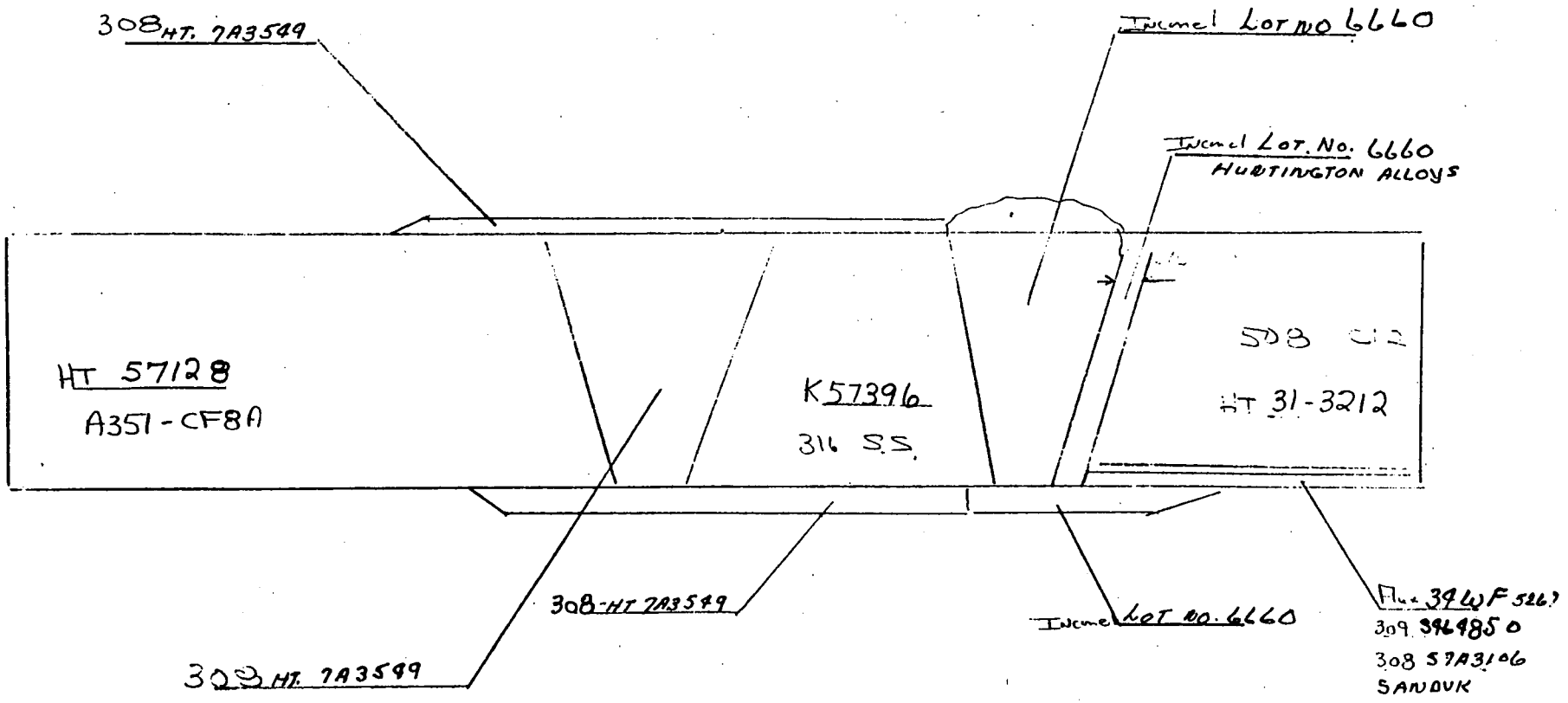
308 HT. 7A3549
Inconel Lot No 6660
Inconel Lot. No. 6660
HUNTINGTON ALLOYS
HT 57128
A351 - CF8A
K57396
316 S.S.
308 C.2
HT 31-3212
308 HT 7A3549
Inconel Lot No. 6660
308 HT 7A3549
309 396485 0
308 57A3106
SANDVIK

Royce Aerospace Materials Corp.
2200 New Horizons Blvd., N. Amityville, New York 11701
Telephone 516-225-1000

CERTIFICATE OF ANALYSIS

FOR
TOOLING SPECIALISTS
P.O. Box 828
Latrobe, Pa 15650

CUSTOMER'S ORDER NO.	INVOICE NO.	INVOICE DATE
C-210	3352-23	3-29-85

DESCRIPTION

HEAT	MILL	SIZE	CONDITION	SPECIFICATIONS
31-3212		8 x 24 x 42"Lg.		SA 508 Cl. 2

CHEMICAL ANALYSIS

C	MN	SI	P	S	CR	NI	CO	MO	W	TI	AL
.24	.67	.28	.009	.006	.38	.68		.62			

B	ZR	FE	CB+TA	V	O_2	N_2	H_2	Cu			
				.02							

PHYSICAL ANALYSIS

1000 PSI U.T.S.	.2% Y.S.	.02% Y.S.	PERCENT E%	R.A.%	TEMP.	HARDNESS	HEAT TREATMENT

STRESS RUPTURE

HRS.	PERCENT E%	R.A.%	1000 PSI STRESS	TEMP.	HARDNESS	HEAT TREATMENT

BEND TEST:
GRAIN SIZE: MACRO:
DECARBORAZATION: MICRO:
EMBRITTLEMENT:

ADDITIONAL TESTING

WE CERTIFY THAT THE RESULTS HEREIN NOTED ARE TRUE AND CORRECT TO OUR KNOWLEDGE AND CONTAINED IN OUR CORPORATION RECORDS.

SWORN AND SUBSCRIBED

NOTARY PUBLIC

MY COMMISSION EXPIRES

P.O. Box 1[illegible]
Baltimore, Maryland 21203
Telephone: (301) 288-2000

EASTERN STAINLESS STEEL COMPANY

DIVISION OF Eastmet CORPORATION

CERTIFIED MATERIAL TEST REPORT

suits and the state[illegible] of performed operations recorded here are in compliance with the ordered material specifications and the applicable material requirements.

MANIFEST NO. 4557

DATE 011386

SHIP TO: WILLIAMS AND COMPANY INC
7640 REINHOLD DR
CINCINNATI OH45237

MAIL TO: WILLIAMS AND COMPANY, INC.
901 PENNSYLVANIA AVENUE
PITTSBURGH, PA 15233
ATTN. SANDY MCNAMEE

E Bonzuffi
QUALITY CONTROL DEPARTMENT
01/13/86

SALES ORDER: 555627 | CUSTOMER'S P.O. NO.: 684799950306 | M- 5 | S- 2 | O-

ITEM	HEAT NO.	M.P.O.	TYPE	FINISH	GAUGE	WIDTH / O.D.	LENGTH / I.D.	PIECES	GROSS	NET
01	K57396	98570	316	NO. 1	3.0000	72.0000	158.0000	1	9,978	9,978

MATERIAL SPECIFICATIONS AND REQUIREMENTS

SPECS 06-220 ASTM A240-84A A262-84 PRACT A OR E QQS-766C AMEND 6 COND A
ASME SA240-S85 CHEM TO ASTM A312-84C CHEM & MECH TO ASTM A276-84
FREE FROM KNOWN CONTACT WITH MERCURY MINIMUM SOLUTION ANNEALING TEMPERATURE 1900 F

HEAT NO.	TYPE	C %	MN %	P %	S %	SI %	CR %	NI %	CU %	TI %	CB+TA %	MO %	CO %	N %
K57396	316	.050	1.41	.024	.007	.49	16.77	10.10	.16			2.06	.20	.066

CORROSION TEST CODES

CODE	DESCRIPTION
A.	ASTM A262-PRACTICE 'A' (OXALIC)
B.	ASTM A262-PRACTICE 'B' (STREICHEF
C.	ASTM A262-PRACTICE 'C' (HUEY)
D.	ASTM A262-PRACTICE 'E' (CUCUS04)
E.	QQS - 766 (CUS04)

		TRANSVERSE OR FRONT						LONGITUDINAL OR BACK								CORROSION TEST		MAG.PERM.	SOLUTION ANNEAL	
HEAT NO.	M.P.O.	TENSILE PSI	YIELD PSI	ELONG %	HARDNESS	BEND	R/A %	TENSILE PSI	YIELD PSI	ELONG %	HARDNESS	BEND	R/A %	GR	C	CODE	RESULT	TEST	TIME	TEMP.
K57396	98570	83.7	44.9	62	HB156	G	63	84.4	45.1	61	HB154	G	63	5		AE	SAT			

Q.A. APPROVED JAN 23 86 JB

TENSIL AND YIELD X 1000

MAR-455518-RN

ESCO CORPORATION

2141 N.W. 25th Ave., Portland, Oregon 97210

Tooling Specialist Inc
East & Fayette ST.
Latrobe Pa 15650
P.O Box 828

DATE 1-7-82

NO. 008-82

METALLURGICAL LABORATORY REPORT

MECHANICAL PROPERTIES

HEAT NO.	YIELD POINT	YIELD STR. 0.2 PER CENT OFFSET PSI.	ULTIMATE TENSILE STR. PSI.	ELONG. IN 2 INCHES PER CENT	REDUCTION OF AREA PER CENT	HARDNESS BRINELL	HARDNESS ROCKWELL	IMPACT, FT. LBS. CHARPY
57128		39.950	79.380	57				

CHEMICAL ANALYSIS

HEAT NO.	CARBON	MANGANESE	SILICON	CHROMIUM	NICKEL	MOLYBDENUM	COPPER	SULPHUR	PHOSPHORUS	OTHER ELEMENTS
57128	.03	.72	1.39	28.17	8.90	.24		.015	.025	

CORROSION

ACIDIFIED COPPER SULFATE TEST FOR INTERGRANULAR CORROSION

NO SPECIMENS TESTED _____ DEGREE OF BEND _____ RESULTS – SATISFACTORY NO CRACKING _____
– UNSATISFACTORY CRACKING _____

BOILING NITRIC ACID TEST (HUEY) – CORROSION LOSS I.P.M. _____ I.P.Y. _____

MAGNETIC PERMEABILITY

PERMEABILITY OF FEEBLY MAGNETIC MATERIALS – USING PERMEAMETER _____ MU.

SPECIFICATION NO.: SA-351 Gr CF8A

CUSTOMER ORDER NO.: 5174

SALES ORDER NO.: 6648380

ITEMS COVERED: 1 Pc - Test Block - Patt # X10767

We certify that the foregoing is a true and correct report of the values obtained and that they comply with the requirements of the specification, except as noted below:

☒ NO EXCEPTIONS ☐ EXCEPTIONS _____

Sworn to and Subscribed Before Me

On This _____ day of _____, 19 ____

_____
NOTARY PUBLIC

My Commission Expires _____, 19 ____

Result As Above Certified
ESCO CORPORATION

Signed F. J. [illegible]
METALLURGICAL DEPT.

FORM NO. 12-03181-75

MATERIAL CERTIFICATE

SANDVIK Steel

SANDVIK STEEL CO.
P.O. BOX 1220, SCRANTON, PA. 18501 PH: 717 - 587-5191
PLANT LOCATION: INTERSTATE 81, WAVERLY EXIT 59

CUSTOMER PURCHASE ORDER NO.	SANDVIK ORDER NO.	ITEM	SPECIAL CODE	MARKS	CERTIFICATE DATE
55052 99 S 01 07	550257		28360/28322	303.8#	2/12/85

SOLD TO: WILLIAMS AND COMPANY INC
PITTSBURGH PA

SPECIFICATION AND MATERIAL:
AWS A-5.9

SANDVIK STAINLESS STEEL WELDING WIRE TYPE ER 309 3/32" x 60

Filler Metal Analysis, %

Heat	C	Si	Mn	P	S	Cr	Ni
S464850	.058	.42	1.84	.008	.019	23.26	12.86

Mo	Cb/Nb	Ta	Ti	Cu
.02	.01	.01	.06	.027

For Bengt H. Berg, Manager, Product Quality and Metallurgy

(W-B-A-1, REV. 8) jh

APPROVED
FEB 15 '85

S. 5030

CUSTOMER COPY NO. 1

MATERIAL CERTIFICATE

SANDVIK STEEL CO.
P.O. BOX 1220, SCRANTON, PA. 18501 PH: 717 - 587-5191
PLANT LOCATION: INTERSTATE 81, WAVERLY EXIT 59

CUSTOMER PURCHASE ORDER NO.	SANDVIK ORDER NO.	ITEM	SPECIAL CODE	MARKS	CERTIFICATE DATE
02150-04-S0107	551217		29483	1046.9#	7/9/85

SOLD TO: WILLIAMS AND COMPANY INC
PITTSBURGH PA

SPECIFICATION AND MATERIAL:
AWS A-5.9

SANDVIK STAINLESS STEEL WELDING WIRE TYPE ER 308 3/32" x 60

Piller Metal Analysis, %

Heat	C	Si	Mn	P	S	Cr	Ni
S7A3106	.066	.42	1.66	.018	.014	19.96	9.30

Mo	Cb/Nb	Ta	Ti	Cu
.16	.01	.01	.01	.08

For Bengt H. Berg, Manager, Product Quality and Metallurgy

15 (W-B-A-1, REV. 8) jh

S: 5030

CUSTOMER COPY NO. 2

MATERIAL CERTIFICATE

SANDVIK STEEL CO.
P.O. BOX 1220, SCRANTON, PA. 18501 PH: 717 - 587-5191
PLANT LOCATION: INTERSTATE 81, WAVERLY EXIT 59

CUSTOMER PURCHASE ORDER NO.	SANDVIK ORDER NO.	ITEM	SPECIAL CODE	MARKS	CERTIFICATE DATE
0218904-R-0107	551380			220#	7/23/85

SOLD TO: WILLIAMS AND COMPANY INC
PITTSBURGH PA

SPECIFICATION AND MATERIAL:

SANDVIK FLUX TYPE 34WF FOR STRIP ELECTRODES

Lot 5267

This is to certify that, as contained in Sandvik's records, the contents of this certificate are correct and accurate, and that the material is as stated above.

For Bengt H. Berg, Manager, Product Quality and Metallurgy

(W-S-4, REV. 3) jh

Q.A.
JUL 30 '85
4

S. 5030

MATERIAL TEST REPORT

8

INCO ALLOYS INTERNATIONAL

HUNTINGTON ALLOYS — WIGGIN ALLOYS

INCO ALLOYS INTERNATIONAL, INC.
1401 BURRIS ROAD
NEWTON, NORTH CAROLINA 28658

TO: WILLIAMS & CO INC
901 PENNSYLVANIA AVE
PITTSBURGH PA 15233

SHIP TO: WILLIAMS & CO INC
901 PENNSYLVANIA AVE
PITTSBURGH PA 15233

EXPLANATION OF NOTES
(1) UNLESS OTHERWISE SHOWN %NI INCLUDES A SMALL AMOUNT OF COBALT.
(2) SYMBOLS IN RUPTURE LIFE COLUMN OF STRESS RUPTURE TEST INDICATE THE FOLLOWING CONDITIONS.
"D"-TEST DISCONTINUED WITHOUT FRACTURE.
"S"-COMBINATION NOTCH AND SMOOTH BAR SPECIMEN FRACTURED IN SMOOTH GAUGE.
"X"-STRESS WAS INCREASED PER SPECIFICATION OPTION TO INDUCE EARLY FRACTURE.

DATE 05/02/86 PAGE 1 OF

THIS IS TO CERTIFY THAT ALL REQUIRED INSPECTIONS AND TESTS HAVE BEEN PERFORMED IN ACCORDANCE WITH THE ORDER SPECIFICATION REQUIREMENTS. THE TEST REPORT REPRESENTS THE ACTUAL ATTRIBUTES OF THE MATERIAL FURNISHED AND VALUES SHOWN ARE CORRECT AND TRUE. THE MATERIAL DESCRIBED BY THIS CERTIFICATE IS IN FULL COMPLIANCE WITH ALL ORDER AND INSPECTION REQUIREMENTS.

QUALITY ASSURANCE REPRESENTATIVE

DIST.	CHARGE ORDER NO.	MARK ORDER NO.
676	56003 99 R 01 07	56003 99 R 01 07

IAI ORDER NO./ITEM	INSPECTED BY
W16888 12	IAII

QUANTITY	DESCRIPTION OF MATERIAL SHIPPED
1840 LBS.	INCONEL WELDING ELECTRODE 182 .1870DI 14.000IN

SPECIFICATIONS ASME SFA 5.11 SEC 2 1983 EDITION 85 SUMMER ADDENDA CL ENICRFE-3 UNS: W86182
ANSI AWS A5.11-83 CLASS ENICRFE-3

CHEMICAL ANALYSIS

CNTRL#	C	MN	FE	S	SI	CU	NI(1)	CR	TI	CB+TA	TA	P	OTHERS
6660	0.04	6.65	7.84	0.004	0.43	0.01	68.52	14.45	0.61	1.44	0.01	0.010	<0.50

VISUAL AND DIMENSIONAL EXAMINATION SATISFACTORY.
MATERIAL, WHEN SHIPPED, IS FREE FROM CONTAMINATION BY MERCURY, RADIUM, ALPHA SOURCE, AND LOW MELTING ELEMENTS.
THE RECORDING OF FALSE, FICTITIOUS OR FRAUDULENT STATEMENTS OR ENTRIES ON THIS DOCUMENT MAY BE PUNISHED AS A FELONY UNDER FEDERAL STATUTES INCLUDING FEDERAL LAW, TITLE 18, CHAPTER 47.

APPROVED
MAY 13 '86

MATE[illegible] TEST REPORT

6/12/86

TELEDYNE McKAY

Welding Products Division
P.O. Box 1509
York, Pa. 17405-1509
Telephone: 717-845-7581
Telex: 84-0428

Harvey CO. of Greensburg Inc.
1055 Garden St.
P.O. Box 910
Greensburg PA. 15601-0910

Your Order No. 26021
Marked For

Our Order No. 22770-01
Date Shipped 6/10/86

Material Description and Specifications

Item	Weight, lb	Size, in	Classification	McKay Designation
1	120	3/32"	E308/308H-16	308/308H AC-DC
2	120	1/8"	E308/308H-16	308/308H AC-DC
3	120	5/32"	E308/308H-16	308/308H AC-DC
4	120	3/16"	E308/308H-16	308/308H AC-DC
5				

Item	Heat No	Lot No	Specification
1	64109	2568122	AWS A5.4-81; ASME SFA5.4
2	7A3549	2468078	AWS A5.4-81; ASME SFA5.4
3	8A2292	2468070	AWS A5.4-81; ASME SFA5.4
4	7A3549	2467989	AWS A5.4-81; ASME SFA5.4
5			

Chemical Analysis: TYPICAL WELD METAL

Item	% C	% Mn	% P	% S	% Si	% Cr	% Ni	% Mo	% Cu	%Co+Ta	% V		Typical Ferrite
1	.06	1.0	.022	.015	.40	20.2	9.6	.15	.10				7FN(Delong)
2	.06	1.0	.022	.015	.40	20.2	9.6	.15	.10				7FN(Delong)
3	.06	1.0	.022	.015	.40	20.2	9.6	.15	.10				7FN(Delong)
4	.06	1.0	.022	.015	.40	20.2	9.6	.15	.10				7FN(Delong)
5													

Typical Mechanical Properties

Item	Tensile, psi	Yield, psi	% E	% RA	Charpy V-Notch Impact, ft lb	
1	86,000	65,000	45			
2	86,000	65,000	45			
3	86,000	65,000	45			
4	86,000	65,000	45			
5						

nen

We hereby certify that the above product has been classified in accordance with the listed specifications and conforms to all applicable requirements thereof.

TELEDYNE McKAY

W F Mechley

Authorized Signature

Sworn and Subscribed before me this _____ day of

_____ 19___ _____
Notary Public

My commission expires _____, Spring Garden Twp. York Co

Form TM-113B

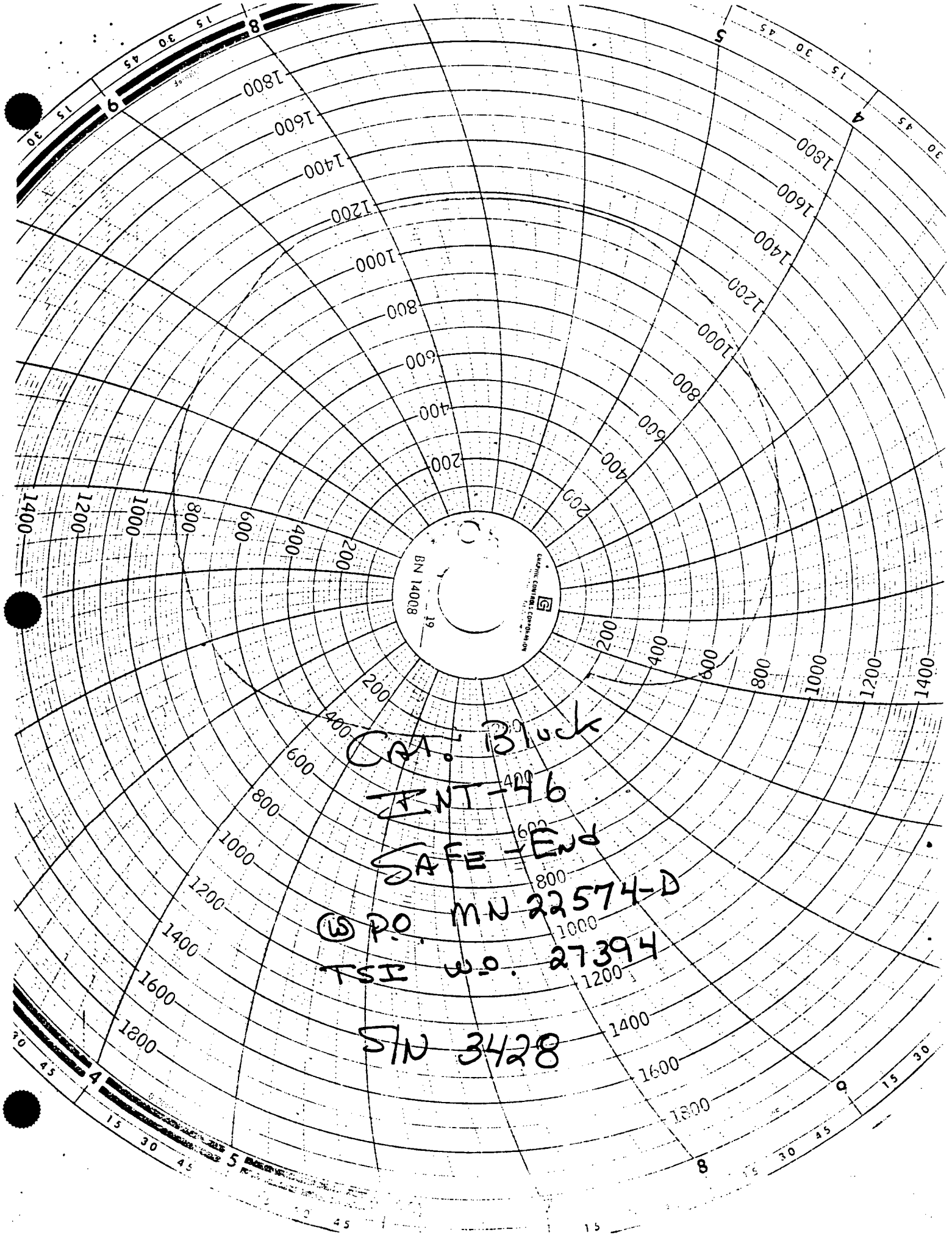
BN 14008
CRA. Block
ENT-46
SAFE-END
P.O. MN 22574-D
TSI W.O. 27394
SN 3428

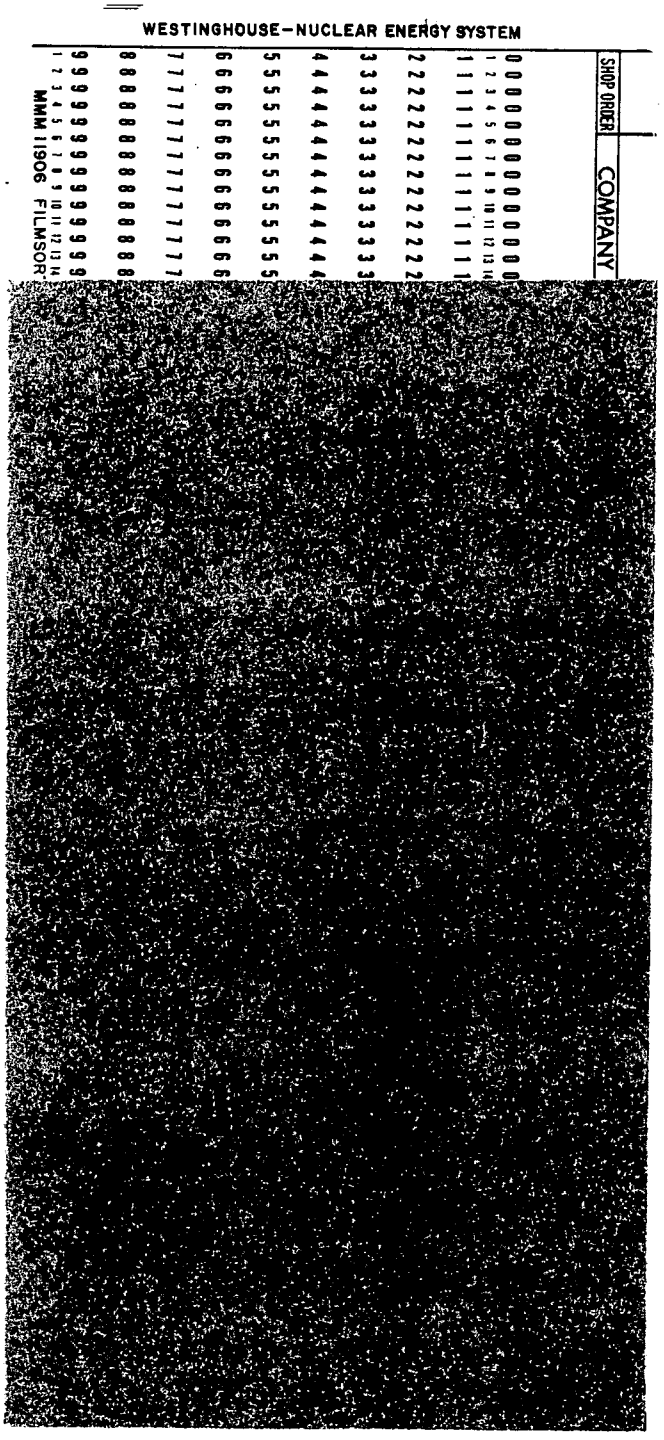

INT-46

(SH.1 OF 2 AND SH.2 OF 2)

INDIAN POINT UNIT NO. 3
OUTDATED CALIBRATION BLOCKS

The following is a list of calibration blocks that were applicable for examinations during Preservice Baseline and 1st Period of 1st Interval Balance of Plant Operations. These calibration blocks were replaced due to upgrade of Indian Point Unit No. 3 from the ASME Boiler and Pressure Vessel Code Section XI 1970 Edition to ASME Boiler and Pressure Vessel Code Section XI 1974 Edition thru Summer 1975 Addenda. Included in this section are certification papers for the following:

1. IP-3-3 : 14" Sch 140 1.250"T; Heat No.: E-1473; A376 TP316 Stainless Steel; 5.8" Length; 90° Segment; Contains 2-1/4T Holes and 2-3/4T Holes; Used to examine: Class 1 - 14" RHR Hotleg Take-off and Pressurizer Surge Piping.

2. IP-3-4 : 10" Sch 140 1.00"T; Heat No.: F-0725; A376 TP316 Stainless Steel; 6.0" Length; 90° Segment; Contains 2 1/2T Holes; Used to Examine: Class 1-10" Accumulator Discharge and Plocap Piping.

3. IP-3-5 : 6" Sch 160 .719"T; Heat No.: M3715; A376 TP316 Stainless Steel; 5.9" Length; 180° Segment; Contains 2 1/2T Holes; Used to Examine: Class 1-6" RHR and Pressurizer Safety Piping.

4. IP-3-6 : 3" Sch 160 .438"T; Heat No.: M5900; A376TP 316 Stainles Steel; 6.0" Length; 180° Segment; Contains 2 - 1/2T Holes; Used to Examine: Class 1- 4" Sch 160 Pressurizer Relief; 4" Sch 120 Pressurizer Spray and 3" Letdown, RTD Return, Pressurizer Relief, Pressurizer Spray and Charging Piping.

5. IP-3-7 : 2" Sch 160 .344"T; Heat No.: 2P4659; A312 TP 304 Stainless Steel; 5.8" Length; 360° Segment; Contains 2 - 1/2T Holes; Used to Examine: Class 1-2" SIS, SIS Hotleg, Letdown, Drain, RTD Hotleg Take-off, RTD Coldleg Take-Off, SIS Coldleg, Seal Injection and Auxiliary Spray Piping.

6. IP-3-8 : 1.5" Sch 160 .281"T; Heat No.: 2P1668; A376 TP304 Stainless Steel; 3.8" Length; 360° Segment; Contains 2 - 1/2T Holes; Used to Examine: Class 1 - 1.5" SIS Coldleg and Seal Injection Piping.

7. IP-3-9 : 3.0"T x 3.0"W x 15.25"L; Heat No.: C2608-2B; SA533 Grade B Class 1 Carbon Steel; Contains 1-1/4T and 1-3/4T Holes; used to Examine: Class 2-Steam Generator Shell.

8. IP-3-10 : 5.0"T x 4.0"W x 10"L; Heat No.: C0815; SA533-69A Grade B Class 1 Carbon Steel. Used to Examine: Class 1-Pressurizer and Steam Generator Channel Head to Tubesheet.

The following calibration block was manufactured for the 2nd and 3rd Period of the 1st Interval Balance of Plant Operations to meet ASME Boiler and Pressure Vessel Code Section XI 1974 Edition thru Summer 1975 Addenda for examination of the 10" Sch 40S RHR and Accumulator Discharge Piping. This block was later replaced by INT-16R1.

9. INT-16 : 10" Sch 40S .365"T; Heat No.: K24123; Identity No.: 1971-12-1-2; A312TP304, Stainless Steel; 6.5" Length; 60° Segment; Contains - 2 Axial Notches, 1 Circumferential Notch and 1-1/2T Hole; Used to Examine: Class 2 10" Sch 40S RHR and Accumulator Discharge Piping.

4/0

Consolidated
IRON WORKS, INC.

P. O. BOX 1212 HOUSTON, TEXAS 77001

CERTIFICATE OF TESTS

Date 25 May 1968

SOLD TO
CAPITOL PIPE & STEEL PRODUCTS, INC.
301 City Line Avenue
Bala Cynwyd, Pennsylvania
Attn: Mr. J. Dockray

SHIP TO

Customer Order No.	C.I.W. Sales Order No.	Specification
36147	F-8811	A-376 Type 316 W/S2, S4 & S6

Description of Material ITEM #3
14" OD Sch. 140 Pipe

C.I.W. Part Number	Heat No.	C	MN	P	S	SI	CR	NI	MO	Co		CU
		CHEMICAL ANALYSIS										
86-1400-1150-54	E 1473	.08	1.69	.015	.005	.36	16.93	13.54	2.17	.07		.07
	E 1474	.08	1.62	.015	.007	.33	17.13	13.50	2.37	.08		.07

Pipe has been hydrostatically tested at 2344 psi and found acceptable.
Each length of pipe has been etch inspected and found acceptable.
Flattening Tests: Satisfactory
Each length of pipe has been ultrasonically inspected per ASME Section 3, Para. N 324.3 using a 3% notch standard and found acceptable.

C.I.W. Part No. or Size	Quantity	Heat No.	.2% Offset Yield PSI	Tensile PSI	% Elong. In.	% Red. Area	Pipe Length
			MECHANICAL PROPERTIES				
86-1400-1150-54	Ser.# 3306	E 1474	45,100	90,500	53.7	69.1	16'10-5/8"
			45,200	90,300	56.5	66.9	
	# 3307	E 1474	45,100	87,300	57.6	66.4	27'10-3/4"
			45,700	87,500	57.5	66.0	
	# 3308	E 1473	41,700	84,500	58.5	70.9	26'4-1/8"
			41,500	82,300	59.6	71.3	
	# 3309	E 1473	43,700	83,300	60.0	74.2	23'0-1/4"
			42,500	83,800	60.0	73.4	

C.I.W. Heat No.	Jominy Hardenability	Grain Size

Heat Treat Annealed.
1925°F., hold 1 hr. at temp. Water quench.

Drawn Corp.
#E 2387 43 PT1

Subscribed and Sworn to before me this
day of May 1968

Notary Public
G. A. TORCITTON
Notary Public in and for Harris County, Texas
My Commission Expires June 1, 1969

I certify these tests to be correct as contained in the records of the company.

Metallurgist
J. L. SHELLEY,

Form 455 H.C.V. 3-67

* CORRECTED REPORT

Lot #2

~~Prairie Island~~

Error not used at PI.

Cameron IRON WORKS, INC.

P. O. BOX 1212 HOUSTON, TEXAS 77001

CERTIFICATE OF TESTS

Date 19 March 1969

SOLD TO: CAPITOL PIPE & STEEL PRODUCTS
301 City Line Avenue
Bala-Cynwyd, Pa.

SHIP TO: Pravo Corp

EWO-1949-2

PLANT

STD. BLOCK NAME 10" PIPE-140

NSD S/N HT # D6034

MATERIAL SS 316

LOT NO. 2

Customer Order No.	C.I.W. Sales Order No.	Specification
43105-00	F 11298-4	ASTM A376, TP316

Material: Pipe, 10" Sch 140

CHEMICAL ANALYSIS

C.I.W. Part Number	Heat No.	C	MN	P	S	SI	CR	NI	MO	W	V	CU	CO
5-1075-0875-54	D 6034	.06	1.52	.010	.007	.74	16.62	13.39	2.19			.13	.06
	E 1729	.04	1.63	.026	.006	0.73	16.10	13.91	2.18			.11	.22
	F 0702	.03	1.71	.025	.009	.21	17.20	12.70	2.27			.06	.06
	F 0725	.03	1.65	.019	.006	*.24	16.13	12.56	2.26			.10	.22

Ultrasonically inspected 100% and found acceptable.

Each length of pipe has been etch inspected and found acceptable.

MECHANICAL PROPERTIES

C.I.W. Part No. or Size	Quantity	Heat No.	.2% Offset Yield PSI	Tensile PSI	% Elong. In.	% Red. Area	Charpy Impact	Hardness
5-1075-0875-54	1 Length	D 6034	31,800	75,400	68.0	79.9		
	1 Length	E 1729	46,100	84,600	69.5	74.2		
	2 Lengths	F 0702	46,300	90,600	57.1	71.3		
	4 Lengths	F 0725	40,100	84,200	61.4	71.3		

Heat Treat Annealed. 1925°F., hold 1 hr. at temp. Water quench.

Bending Tests: Satisfactory

Each length of pipe hydrostatically tested at 3125 psi.

C.I.W. Heat No.	Jominy Hardenability			Grain Size	
Corp. Ser. #	Heat #	Length	Corp. Ser. #	Heat #	Length
4299	F 0702	25'10-1/8"	F 4302	F 0725	20'8-1/16"
[illegible]	F 0702	24'6-9/16"	4304	F 0725	23'1-7/16"
[illegible]	E 1729	25'1-1/4"	5	D 6034	18'1"
4297	F 0725	24'11-1/8"			
4298	F 0725	24'10-1/8"			

Subscribed and Sworn to before me this [illegible] day of March 1969

I certify these tests to be correct as contained in the records of the company.

Notary Public

G. A. TOUCHTON

Notary Public in and for Harris County, Texas.

My Commission Expires June 1, 1969

J. H. Kessler, Metallurgist

CAPITOL PIPE BALA CYNWYD MAR 24 1969 PURCHASING DEPT.

412

Tubular Products Division

ANCE, OHIO-1 | BEAVER FALLS, PA.-2 | MILWAUKEE, WISCONSIN-3

TEST REPORT

CUSTOMER ORDER NO. 943717-00 | DATE 07/16/69 | DATE SHIPPING 10/17/69 | SHIPPING NUMBER 101375 2 101376

SOLD TO: CAPITOL PIPE & STEEL PRODUCTS INC.
301 CITY LINE AVENUE
BALA-CYNWYD, PENNA. 19004 (33)

SHIP TO: CAPITOL PIPE & STEEL PRODUCTS INC.
CAPE HENLOPEN DRIVE
LEWES, DELAWARE

BOTH RAW MATERIALS AND FINISHED PRODUCTS ON THIS ORDER HAVE BEEN PRODUCED IN THE USA.
2000° - 2050° & WATER QUENCH
CORRECTED 4/13/70
REVISED 12-11-70 6" 11.5/160

SEAMLESS B&W CROLOY 316 EF, CD, AW, PIPE TO ASTM A376-64

83/7 CLE item 1 CBM-34 113 ft comm 2051 OK CRP 2-4-71

MARK SHIP: NO OIL PICKLE

MSP.

B & W ORDER NO. — O.D. WALL FROM CODE NO "P" PARTIAL "C" COMPLETE

ITEM	O.D.	WALL	LENGTH	SPECIAL MARKS	%	PCS.	FOOTAGE	HYDRO TEST LBS PER SQ. INCH	TESTS MADE
-A053978	-P025	34	28535 09	110000					ETCH
01	6625	718	RL 17-24		P	46	1070 04	2800	BEND
					C	7	164 94		FLATTENING OK
									FLANGE
									EXPANSION
									FLARE
									CORROSION
									CRUSH
									ULTRASONIC
									DYE PENETRANT

PLANT
BLOCK NAME
SIZE S/N
MATERIAL
LOT NO.

E2627-34

THIS IS TO CERTIFY THE ABOVE TUBES AND PIPE HAVE BEEN INSPECTED AND TESTED IN ACCORDANCE WITH AND HAVE MET ALL THE REQUIREMENTS OF THE SPECIFICATIONS.

THE BABCOCK & WILCOX COMPANY

MCM

PAUL D. PRICE

CHEMICAL ANALYSIS

ITEM	HEAT NO.	CARB	MANG	SUL	PHOS	SIL	CHROM	NI	MO	CU	C.B.	TI.
	M3715	.050	1.76	.022	.025	.54	17.56	13.27	2.41			
	M3714	.041	1.66	.017	.026	.44	17.39	13.22	2.37			
	M3713	.067	1.69	.013	.025	.47	17.00	13.20	2.49			

ITEM	HEAT NO	ESTIMATE STRENGTH	YIELD POINT	% ELONG IN 2"	REDUCT IN AREA	HARDNESS
	M3715	79502	40968	70		
	M3714	79007	42417	69		
	M3713	81303	42485	70		

SWORN TO AND SUBSCRIBED BEFORE ME 10/21/69

RITA J. OYLE, Notary Public
W. Mayfield Borough, Bvr. County, Pa.
MY COMMISSION EXPIRES
COMMISSION EXPIRE OCT. 3, 1970

4/13

ALLIANCE, OHIO-1 | Tubular Products Division, BEAVER FALLS, PA.-2 | MILWAUKEE, WISCONSIN-3

TEST REPORT

CUSTOMER ORDER NO. 102-05803 | DATE 09/28/71 | DATE SHIPPING 11/29/71 | NUMBER 120124 | 2

SHIP TO
MCJUNKIN CORP
PO BOX 513
CHARLESTON 22 WEST VIRGINIA 25322

MCJUNKIN CORP
LEETSDALE PENNA

Material was given a heat treatment consisting of heating to a min of 1900°F & water quench per Para. 4.4.2 of specification.

3" - 5/160 TP/316

SMLS B&W SPECIAL TYPE 316 EF AW PIPE TO ASTM A376-70 AND ASME SA-376
ULTRASONIC TESTED 5 PCT NOTCH PER USAS B31.7 CLASS 1. REFER TO E2626
PIA FOR GENERAL INSTRUCTIONS.

MARK SHIP 2-2 NO OIL PICKLED

B & W ORDER NO. — O.D. WALL FROM CODE NO — "P" PARTIAL — "C" COMPLETE

ITEM	O.D.	WALL	LENGTH	SPECIAL MARKS	P/C	PCS.	FOOTAGE	HYDRO TEST LBS. PER SQ. INCH	TESTS MADE	
-A069508-351327340350911 0000									ETCH	
01 3500	438	RL	17-24		C	10	226 78	2500#	BEND	
069509-351124324350911 0000									FLATTENING	ok
02 2 875	375	RL	17-24		C	3	67 94	2500#	FLANGE	
									EXPANSION	
									FLARE	
									CORROSION	
									CRUSH	
									ULTRASONIC	ok
									DYE PENETRANT	

PLANT
STD. BLOCK NAME
NSD S/N
MATERIAL
LOT NO.

THIS IS TO CERTIFY THE ABOVE TUBES AND PIPE HAVE BEEN INSPECTED AND TESTED IN ACCORDANCE WITH AND HAVE MET ALL THE REQUIREMENTS OF THE SPECIFICATIONS.

THE BABCOCK & WILCOX COMPANY

des

BY John G. Swager — John G. Swager

CHEMICAL ANALYSIS

ITEM	HEAT NO	CARB	MANG	SUL	PHOS	SIL	CHROM.	NI	MO	CU	CB	TI
01	M5900	.065	1.67	.018	.028	.46	17.15	13.30	2.47			
02	C6581	.059	1.78	.029	.020	.59	17.16	13.53	2.49			

ITEM	HEAT NO.	ULTIMATE STRENGTH	YIELD POINT	% ELONG IN 2"	REDUCT IN AREA	HARDNESS
01	M5900	89415	45444	51		
		89143	46677	61		
02	C6581	92392	47775	58		

STRIP [X] SID RD [ ] FULL SECTION [ ]

SWORN TO AND SUBSCRIBED BEFORE ME 12/06/71

RITA J. KYLE, Notary Public
W. Mayfield Borough, Bvr. County, Pa.
MY COMMISSION EXPIRES
COMMISSION EXPIRES OCT. 3, 1974

4/5

FET. 2-1 REV. 9-68
01.5 CAT. NO. 8370.01
3.0188

United States Steel Corporation

ELWOOD WORKS
METALLURGICAL DEPT.

STANDARD CERTIFIED TEST REPORT
TUBULAR PRODUCTS

DR

DATE 10/17/73

CUSTOMER	CUSTOMER'S ORDER NUMBER	INVOICE NO.	U.S. STEEL ORDER NO.
A. B. MURRAY CO. INC.	E-24074-3	48610 11/7/73	EA 47238

ADDRESS	MATERIAL	GRADE
PO BOX 476	CF (SMLS) STNLS PRESSURE PIPE	TP 304

CITY STATE	HEAT TREATMENT	SIZES
ELIZABETH, N.J. 07207		2.375" OD X .344" WT - ITEM 02 2" Sch 160

SPECIFICATION OR PRODUCT DESCRIPTION

ASTM A 312

HEAT NUMBER	CODE, ITEM OR LOT	CHEMICAL ANALYSIS (%) C	MN	P	S	SI	NI	CR	MO	CO		HYDRO. TEST PRESSURE P.S.I.-MIN.	MECHANICAL PROPERTIES YIELD STRENGTH POINT P.S.I.	ULTIMATE STRENGTH P.S.I.	ELONG. IN 2" %	RED. OF A. OR HARDNESS	OTHER DATA	
204650	L/DLO	.049	1.40	.024	.015	.51	10.56	18.81				2500	49100	85460	62.0			
	CHECK	.046	1.43	.022	.015	.51	10.05	18.37										

FLATTENING TESTS SATISFACTORY.

We hereby certify that the above figures are correct, as contained in the records of the company.

R. A. Leitle

416

CAT. NO. 8370.01
003.C158

United States Steel Corporation

ELLW[redacted]
METALLURGICAL DEPT.

STANDARD CERTIFIED TEST REPORT
TUBULAR PRODUCTS

DG

DATE 11/4/69

CUSTOMER: A. B. MURRAY CO. INC.	CUSTOMER'S ORDER NUMBER: E 35094 3	INVOICE NO.: 47665	U.S. STEEL ORDER: EC 29532
ADDRESS: PO BOX 476 1 1/2" Sch 160	MATERIAL: SMLS STAINLESS PRESSURE PIPE		GRADE: *SEE BELOW
CITY STATE: ELIZABETH, NEW JERSEY	HEAT TREATMENT		SIZES: 1.900" [redacted] X .28[redacted] 7 PCS.

SPECIFICATION OR PRODUCT DESCRIPTION
*ASTM A 312 AND A 376 - GRADE TP 304 - COPPER SULPHATE TO A 393 - & AS NOTED ON ORDER.

HEAT NUMBER	CODE, ITEM OR LOT	CHEMICAL ANALYSIS (%) C	MN	P	S	SI	NI	CR	MO	CO		HYDRO. TEST PRESSURE P.S.I.-MIN.	MECHANICAL PROPERTIES YIELD STRENGTH POINT P.S.I.	ULTIMATE STRENGTH P.S.I.	ELONG. IN %	RED. OF A. OR HARDNESS	OTHER
2P1653	LADLE	.053	1.72	.028	.015	.56	10.20	18.40		.20		2500	45300	85040	71.0		
	CHECK	.057	1.67	.025	.017	.57	10.16	18.61		.21							
	"	.046	1.69	.027	.018	.54	9.83	18.47		.21							

THIS MATERIAL MEETS THE ACID COPPER SULPHATE TESTS OF A 393.

THE FLATTENING TESTS WERE SATISFACTORY.

A B MURR[redacted]
P.O. BOX 127 • M[redacted]
McKeesport
751-4400

WEST. ELEC CORP
5[redacted]- TXK 175242 P

W. A. FRANZ

We hereby certify that the above figures are correct, as contained in the [redacted] of the company.

4-7

PURCHASER: [redacted]

Combustion Engr., Inc.
10 Mr. J. Micheel, Pur. Dept.

LUKENS [redacted] COMPANY

COATES [redacted], PA.

TEST CERTIFICATE

DATE: 3-31-67 FILE NO. [redacted]1771

CONSIGNEE:

MILL ORDER NO.	CUSTOMER P.O.		
58350-1	47-31653-1	CJ-32567-BB	Req.#T-51572 23066

SPECIFICATIONS:

Comb. Spec. P3F12 (B) 9-6-66 SA 533 Gr.B Cl. 1 Code Case 1339-2 ASME Sec. 3 Fbx. 80000

BEND TEST O.K. ✓ HOMOGENITY TEST O.K ✓

CHEMICAL ANALYSIS

MELT NO.	C	MN	P	S	Cu	Si	Ni	Cr	Mo	X	XR	XA	X		
C2608	21✓	1.37✓	010✓	018✓		22✓	61✓		47✓	V.I.P. Steel &			F.G.P.		Ladle
Slab 2B	21✓	1.31✓	010✓	017✓		22✓	56✓		45✓						Check
C2624	21✓	1.35✓	009✓	015✓		25✓	61✓		49✓	"	"		"		Ladle
Slab 2	20✓	1.25✓	008✓	015✓		26✓	57✓		45✓						Check
Slab 1	21✓	1.30✓	010✓	013✓		25✓	56✓		47✓						Check

PHYSICAL PROPERTIES

MELT NO.	SLAB NO.	YIELD PSI X100	TENSILE PSI X100	% ELONG. IN 2"	% R.A.	BHN	IMPACTS			DESCRIPTION
C2608	2B	680✓	905✓ 885✓	22✓	B-4105-3					1-216-1/4 x 100-3/4 x 11-3/4"
C2624	2	690✓	915✓ 910✓	22✓	B-4105-2					1- "
C2624	1	685✓	895✓ 895✓	29✓	B-4105-1					1- "

Plates furnished in as rolled temper. 23066

Tests norm. 1550-1650°F., held 4 hrs. max. & Program cooled per C.E. Cooling Rate for 11-3/4" Gauge plate. Tempered 1200-1250°F., held 4 hrs. max. & air cooled.

Tests stress relieved by heating within a rate of 100°F. per hr. to 1125-1175°F., held 40 hrs. & furnace cooled within a rate of 100°F. per hr. to600°F., & air cooled.

PLANT _____

STD. BLOCK NAME _____

(W) NSD S/N _____

MATERIAL _____

LOT NO. _____

We hereby certify the above figures are correct as contained in the records of the company.

SUPERVISOR-TESTING [signature]

J. S. Peck

PGE

COMBUSTION ENGINEERING, INC.

METALLURGICAL RESEARCH AND DEVELOPMENT DEPT

MATERIALS CERTIFICATION REPORT

MATERIAL SPECIFICATION SA-533 GR. B CL. 1 CONTRACT NO. 23066

VENDOR Lukens Steel Company JOB NO. T-51574-003

HEAT NO. C-2608-2B CODE NO. B-4105-3

MATERIAL DESCRIPTION 216 1/4" x 100 3/4" x 11 3/4" Upper Shell Plate

MILL CHEMICAL ANALYSIS

TYPE	C	Mn	P	S	Si	Ni	Cr	Mo	Cb	Cu	
Check	.21	1.31	.010	.017	.22	.56		.45			

MECHANICAL TESTS

TEST NO.	GAUGE	TEST TEMPERATURE °F	YIELD STRENGTH, KSI	ULTIMATE TENSILE STRENGTH, KSI	ELONG. IN 2" %	REDUCTION OF AREA %
BV4-A	.505	R. T.	65.5	84.5	30.0	69.4
BV4-B	.505	R. T.	63.0	84.0	31.0	68.2

IMPACT AND/OR FRACTURE TESTS

TYPE	TEMP. °F	VALUES Ft. Lbs.	% Shear	Mils Lat. Exp	TEMP. °F	VALUES	NDT
Charpy V Notch						Drop Weights	
	-40	11.0	0	10			
	-40	8.0	0	7			
	-40	14.0	0	10			
	+10	32.0	20	27			
	+10	36.0	20	31	0		
	+10	43.0	20	36			
	+40	50.0	30	40	+10		0
	+40	51.0	30	40			
	+40	43.0	30	36			
	+110	88.0	80	66			
	+110	91.0	80	69			
	+110	104.0	80	74			
	+160	124.0	100	84			
	+160	123.0	100	88			
	+160	127.0	100	90			

1-F
PLANT
2-NF
STD. BLOCK NAME
NSD S/N
MATERIAL
LOT NO.

ADDITIONAL DATA INCLUDING HEAT TREATMENT:

1550° - 1650°F 4 hours water quenched plus 1225° ± 25°F 4 hours. Test sample then removed and given additional heat treatment of 1150° ± 25°F 40 hours furnace cooled to 600°F.

All test specimens taken parallel to major rolling direction of the plate at the 1/4 t level and at least 1 t from the quenched edge.

The impacts were notched perpendicular to the plate surface.

47-31653

Form E-2120

cc: R. E. Lorentz, Jr.
S. R. Lewis
J. Brasfield
B. Coulter
E. M. Kisting

We hereby certify that the foregoing data is a true copy of the data furnished us by the producing mill, or data resulting from tests performed in the Combustion Metallurgical Laboratory.

COMBUSTION ENGINEERING, INC.

BY William C Riggs

DATE October 11, 1967

419

CHASER

Westinghouse Elec. Corp.
Eng. Mat. Dept.
Nuc.G.S. Group
E. Pittsburgh, Pa. 15122

LUKENS STEEL COMPANY
COATESVILLE, PA. 19320

TEST CERTIFICATE

MILL ORDER NO.	CUSTOMER P.O.	
11280-1	1700-020-70190	EZ 62072

DATE: 7-11-72 FILE NO. 87-07-14

CONSIGNEE:

80P190
20MP

IFICATIONS: A-533-69AGr. B Class 1 Mod. by Lilco Group

546XK191417-XN

5-16 XK

XN

SEND TEST G.E. HOMOGENEITY TEST

CHEMICAL ANALYSIS

MELT NO.	C	Mn	P	S	Cu	Si	Ni	Cr	Mo				Basic Process
615	21	1.38	010	015		23	51		52	F.G.P. V.I.P. Steel			Electric

C0815

S.G./PFZ

RELEASED BY Q.C.
TO CUS. 7M E-8
INSP. Frank 7-27-72

PHYSICAL PROPERTIES

MELT NO.	SLAB NO.	YIELD PSI X100	TENSILE PSI X100	% ELONG IN 2"	% R.A.	BHN	IMPACTS Tested +20°F.			DESCRIPTION
615 A	38	71.3	93.6	22		196				1- 8" x 8-1/4 ID x 75-2/2 OD
C0815		69.9	93.7	20		192	50	38	58	
		70.9	94.2	20		196	62	32	48	
		69.4	93.7	20		192				

[illegible] tests heated 1650-1700°F., hold 2 hr. per inch min. and water [illegible] to 500°F., then tempered 1250°F., hold 2 hr. per inch min. and [illegible] water quenched.

[illegible] and tests stress relieved by heating to 1150°F., hold 8 hrs. and [illegible] cooled to 600°F.

PLATE
S.O.
[illegible]

hereby certify the above figures are correct as contained in the records of the company.

LOT NO.

SUPERVISOR-TESTING

[illegible]

[illegible] CORPORATION
METALS PROCESSING DIVISION
MATERIAL CERTIFICATION

Date: May 4, 1970
10" S/40 TP 316

CUSTOMER: Capitol Pipe & Steel Products Inc.
CUSTOMER P.O.: 58829-00
PART NUMBER: 10.75" O.D. X (.365" A.W.)
SALES ORDER NO.: 2241-3
PART NAME: PRESSURE TUBING
SPECIFICATIONS: ASTM A 312 - TYPE 316 Including S

	REQUIRED	MILL HEAT NO. K24133 MFD CODE 1971-12-1-2		MILL HEAT NO. MFD CODE		MILL HEAT NO. MFD CODE	MILL HEAT NO. MFD CODE
ELEMENT		HEAT LOT NO. 1548		HEAT LOT NO.		HEAT LOT NO.	HEAT LOT NO.
		Vendor	SI	Vendor	SI		
CARBON	0.08 MAX.	0.044	0.065	0.074	0.06		
MANGANESE	2.00 MAX.	1.28	1.30	1.28	1.34		
SILICON	0.75 MAX.	0.58	0.54	0.60	0.58		
CHROMIUM	16.0 - 18.0	17.10	17.0	17.00	16.9		
NICKEL	11.0 - 14.0	13.90	14.0	13.90	14.0		
PHOSPHORUS	0.040 MAX.	0.029	0.025	0.027	0.030		
SULPHUR	0.030 MAX.	0.019	0.017	0.018	0.018		
MOLYBDENUM	2.0 - 3.0	2.36	2.21	2.36	2.30		
TEST		PHYSICAL [illegible]					
TENSILE, PSI	75,000 MIN.	81,200		75,300			
YIELD, PSI	30,000 MIN.	43,200		40,200			
ELONG, % IN 2 IN.	20 MIN.	54		52			
FLATTENING		OK		OK			
MACRO							
	100% Ultrasonically tested to 3% notch, no reportable defects noted.						

HYDROSTATIC TESTED TO ASTM A530 at 1320 P.S.I. FOR MINIMUM OF 5 SECONDS NO EFFECTS NOTED

HEAT TREATMENT: PARTS WERE HEATED AT [illegible] FOR [illegible] HOURS AND [illegible]

TUBING IS IN THE ANNEALED AND WATER QUENCHED CONDITION.

We hereby certify the above test analysis and physical tests to be correct [illegible]

D. R. [illegible], Industrial Metallurgy

Tool Tag Specialists
5113

NOTES:
1. FABRICATE FROM BASE MATERIAL IDENTICAL TO BASE MATERIAL OF REACTOR VESSEL STUDS TO BE INSPECTED.PRIOR TO FABRICATION VERIFY NO LAMINAR INDICATIONS EXIST IN MATERIAL WHICH MAY AFFECT ANGLE BEAM OR STRAIGHT BEAM CALIBRATION.
2. MANUFACTURER TO DETERMINE 0° LOCATION AS REQUIRED.
3. REMOVE ALL SHARP EDGES EXCEPT AT NOTCHES AND REMOVE BURRS. OUTER AND INNER DIAMETER SURFACES SHALL BE AT LEAST 250 MICROINCHES AND BE SUFFICIENTLY FREE FROM WAVINESS.
4. A CERTIFICATION OF COMPLIANCE AND FINAL INSPECTION REPORT SHALL BE PROVIDED.AS BUILT DIMENSIONS SHALL BE INCLUDED IN THESE DOCUMENTS.
5. APPLICABLE TO ASME BOILER AND PRESSURE VESSEL CODE SECTION XI 1983 EDITION THRU SUMMER 1983 ADDENDA.

NOTCHES: ELECTRIC DISCHARGE MACHINE

6.

NOTCH	LENGTH	DEPTH	WIDTH
A(EDM)	0.375"	0.157"	0.012"
B(EDM)	0.375"	0.157"	0.012"
C(EDM)	0.375"	0.157"	0.012"

NOTCH TOLERANCES:
7. NOTCH LENGTH TO BE +0" -0.007".
8. NOTCH DEPTH TO BE +0" - 0.007".
9. NOTCH WIDTH TO BE ± 0.003".
10. BOTTOM OF NOTCHES TO BE FLAT AND PARALLEL TO THE STUD SURFACES (I.E. RADIAL NOTCHES).

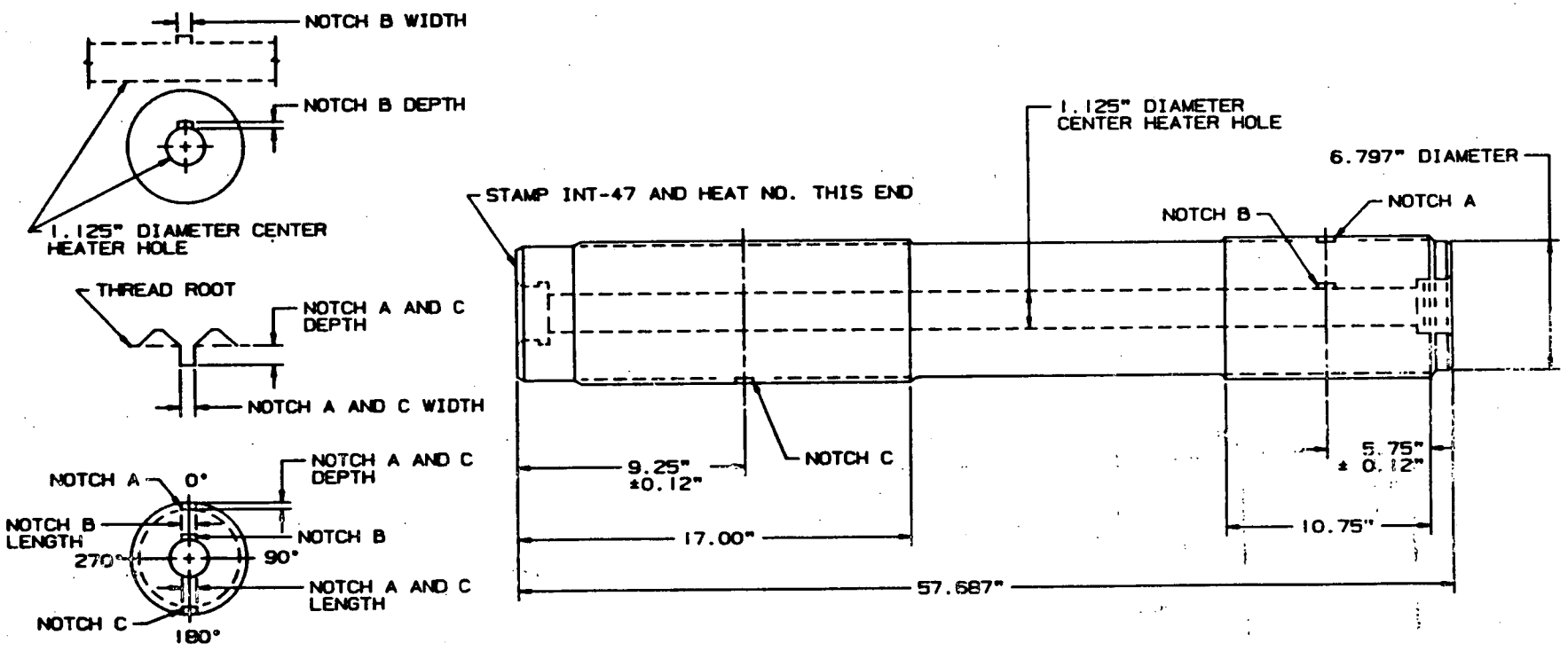

NSID TECHNICAL APPROVAL Phillip C. Burkard	DATE 7-26-88	Westinghouse Electric Corporation NUCLEAR SERVICES INTEGRATION DIVISION
LEVEL III APPROVAL Arnold Fuson	DATE 7-26-88	TITLE CALIBRATION BLOCK INT-47 REACTOR VESSEL CLOSURE HEAD STUD MATERIAL: SA540 GRADE B24 CLASS 3 HEAT NO.: 61923
PRODUCT ASSURANCE APPROVAL Doug Eberger 7/26/88	DATE 7/26/88	
PRODUCT LINE APPROVAL S. Dietrich	DATE 7/26/88	SIZE C SK. NO. INT-47 REV. 0

REVISION

Nuclear Services Integration Division

QUALITY RELEASE

QR- 14454 REV. 0

PURCHASE ORDER	PART NAME	DRAWING & REV
MN 23457 H	UT CALIBRATION STUDS	SEE BELOW

PART NO	CHG NOTICE NO	PO ITEM NO	PROJ/SO NO	QTY ON ORDER	QTY RELEASED
N/A	N/A	SEE BELOW	IN181DA459	2	2

SUPPLIER	SPEC & REV	ORDER
TOOLING SPECIALISTS INC.	N/A	COMPLETE ☒ YES ☐ NO

SERIAL OR IDENTIFICATION NOS

PO, ITE	DESCRIPTION	DWG #	NO RELEASED
001	RV STUD CAL BLOCK	IN7-47 R0	1
002	RCP STUD CAL BLOCK	IN7-48 R0	1

The equipment shown hereon is released by W Quality Assurance. Shipment may be made subject to authorization by W Purchasing. In the Audit Checklist below, an A indicates acceptability, a C indicates a contingency and a W indicates that W QA has waived the auditing or witnessing of the attribute. All non-applicable items are lined out.

AUDIT CHECKLIST

☐	~~Material Certifications~~	☐	~~Non-Operating Electrical Tests~~
☐	~~Heat Treat Records~~	☐	~~Operating Electrical Test~~
☐	~~RT Film and Records~~	☐	~~Pressure Test~~
☐	~~PT/MT Records~~	☐	~~Seat Tightness Test~~
☐	~~Visual~~	☐	~~Performance Test~~
☒	Dimensional ATTACHED	☒	Cleanliness
☒	UT Records	☒	Packaging
☐	~~Personnel Qualification - Welding, NDT~~	☐	~~Code Form~~
☒	CERTIFICATE OF COMPLIANCE	☐	~~Painting~~
☐		☐	

DEVIATION NOTICES AND REMARKS (ALL DEVIATIONS HAVE BEEN APPROVED BY THE RESPONSIBLE WESTINGHOUSE ENGINEER UNLESS A SPECIFIC EXCEPTION IS STATED)

RELEASED FOR SHIPMENT TO INT

THE SUPPLIER CERTIFIES that for the equipment and material released, all contractual requirements have been met. Approved deviations, if any, are listed above.

SUPPLIER SIGNATURE Paul M Puttman DATE 10-6-78

TITLE QA. manager

The equipment shown hereon is released by (W) Quality Assurance. Shipment may be made subject to authorization by (W) Purchasing.

The equipment supplier has certified that the equipment above meets all requirements of the purchase order, drawings and specifications. Westinghouse has reviewed evidence supporting this release and accept as specified above has detected no deviations from such requirements. This release does not waive any rights Westinghouse may have under the purchase order including Westinghouse's right to reject the equipment upon discovery of any such deviations after arrival at destination.

R E Schumacher 10-6-78

Westinghouse Quality Assurance Representative

NSID 1010 11-84

REQUISITIONER

413

TOOLING
SPECIALISTS
INCORPORATED

MACHINE TOOL BUILDERS — SPECIAL MACHINING — DIES — ENGINEERING SERVICE

P. O. BOX 828, LATROBE, PA. 15650 Phone: (412) 539-2534

CERTIFICATE OF COMPLIANCE

Date: Oct. 6, 1988

Westinghouse Electric Corporation
Nuclear Energy Systems
P. O. Box 355
Pittsburgh, PA 15230

Gentlemen:

This is to certify that the products shipped to you, per the information listed below, comply to the requirements of this order.

All required tests and inspections have been performed.

Documented evidence of compliance supporting this certification is available at our facility for review.

Westinghouse Purchase Order Number: MN-23457-H NSDN Number: N/A

TSI Shop Order Number: 5661 Westinghouse QR: 14954 REV.0

Description:

(1) each P.O. Item 001, Machine And Add Notches per Dwg. #INT-47

(1) each P.O. Item 002, Machine And Notches per Dwg. #INT-48

Very truly yours,

Paul M. Prettiman

Paul M. Prettiman
Quality Control Manager

PMP/jk

414

INSPECTION REPORT

Page 1 of 1

TOOLING SPECIALISTS, INC.
Latrobe, Pa. 15650
Phone: (412) 539-2534

Dwg. # INT-47
P.O. # Item 001
MN-23457-H

Revision 0 | Iter —
Work Order # 5661

CUSTOMER:

(W)

PART DESCRIPTION: Material; SA 540, Grade B24, Class 3, Heat No. 61923
1 Calibration Block, INT-47, Reactor Vessel Closure Head Stud

IF OUT OF TOLERANCE, PLACE X IN BOX TO RIGHT OF DIMENSION.

DRAWING DIMENSIONS	Part No. X INT-47	Part No. X	Part No. X	Part No. X	Part No. X	~~Part No.~~ Gage No.
5.75" ±0.12 To ℄ Notch "A"	5.75"					scale
5.75" ±0.12 To ℄ Notch "B"	5.75"					scale
9.25" ±0.12 To ℄ Notch "C"	9.23"					scale
Notch "A"						
0.375" +0 -.007 Length	.372"					142
0.157" +0 -.007 depth	.157"					149
0.012" ±.003 width	.011"					150
Notch "B"						
0.375" +0 -.007 Length	.371"					Electrod.
0.157" +0 -.007 depth	.150"					149
0.012" ±.003 width	.012"					Electrod
Notch "C"						
0.375" +0 -.007 Length	.372"					142
0.157" +0 -.007 depth	0.154"					149
0.012" ±.003 Width	0.011"					150

INSPECTOR: Daniel J. Jones 10/5/88

RECEIVING INSPECTOR:

415

TIMKEN

THE TIMKEN COMPANY

STEEL OPERATIONS
1835 DUEBER AVE. S.W.

CERTIFICATE OF TEST
CANTON, OHIO 44706

SEPTEMBER 03, 1986

SOLD TO: PMC INDUSTRIES
29100 LAKELAND BLVD
WICKLIFFE OHIO 44092

SHIP TO: PMC INDUSTRIES
29100 LAKELAND BLVD
WICKLIFFE OHIO 44092
ATTN: H. DODDS-PROJECT ENGINEER

DESCRIPTION OF MATERIAL: ELECTRIC FURNACE 'DEGASSED' 4340-H 'NUCLEAR' - HOT ROLLED - NORMALIZED - QUENCHED - TEMPERED - PICKLED - STRAIGHTENED - STRESS RELIEVED
SEE GENERAL STATEMENTS FOR SPEC

TIMKEN ORDER 19884 CUSTOMER ORDER I 9823 NUCLEAR GT
SIZE 7.500" RD

CHEMICAL ANALYSIS

HEAT		C	MN	P	S	SI	CR	NI	MO	CU	PIECE NO.	CV NO.
51923	LADLE	.42	.81	.012	.007	.21	.87	1.71	.32	.16		
	CHECK	.43	.83	.012	.008	.21	.88	1.75	.31	.17	1	

HEAT	GRAIN SIZE	PIECE NO.	CV NO.
51923	FINE		

HARDENABILITY DATA

HEAT	LOC	1	2	3	4	5	6	7	8	9	10	12	14	16	18	20	24	28	32	36	40
51923	-	59	58	53	58	58	58	58	57	57	57	36	36	36		56	55	55	53		55

BRINELL HARDNESS

HEAT	LOC	END	END
51923	2A	331.0	331.0
	2B	341.0	321.0
	2C	331.0	321.0
	2D	321.0	321.0

7.5 ϕ

Q.A. APPROVED HWD 9-4-86

WHEN SHIPPING NOTICE IS ATTACHED IT BECOMES PART OF THIS CERTIFICATION

WE CERTIFY THE ABOVE MATERIALS HAVE BEEN INSPECTED AND TESTED IN ACCORDANCE WITH THE METHODS PRESCRIBED IN THE GOVERNING SPECIFICATIONS, AND THE RESULTS OF SUCH INSPECTIONS AND TESTS CONFORM TO THE APPLICABLE REQUIREMENTS.

51923

BETTY JEFFERYS
Notary Public, State of Ohio
My Commission Expires June 30, 1990

NOTARY PUBLIC

AUTHORIZED SIGNATURE

4/6

TIMKEN STEEL OPERATIONS **CERTIFICATE OF TEST**

THE TIMKEN COMPANY 1836 DUEBER AVE. S.W. CANTON, OHIO 44706

SEPTEMBER 03, 198

N ORDER 19884 CUSTOMER ORDER I 9823 NUCLEAR QT

BRINELL HARDNESS

HEAT	PIECE NO.	END	END
	289	321.0	321.0
	290	331.0	321.0
	291	321.0	331.0
	292	321.0	321.0
	293	321.0	331.0
	294	321.0	331.0
	295	321.0	321.0
	296	341.0	331.0

LONGITUDINAL TENSILE TEST

HEAT	PIECE NO.	.20% YIELD STRENGTH P.S.I.	TENSILE STRENGTH P.S.I.	ELONG IN	%	% RED	TEMP C	SPEC
61923	H	150,240	164,790	2.0	15.5	52.2		.50
	I	145,140	162,530	2.0	15.0	49.5		.50
	J	146,730	162,850	2.0	15.5	50.0		.50

CHARPY V-NOTCH IMPACT RESULTS

HEAT	PIECE NO.	TEMP	FT. - LBS. NO. 1	NO. 2	NO. 3	% SHEAR NO. 1	NO. 2	NO. 3	LATERAL EXP IN INCH NO. 1	NO. 2
61923	H	40 F	48	48	49	100	100	100	.026	.02
	I	40 F	49	50	50	100	100	100	.031	.026
	J	40 F	50	51	52	100	100	100	.031	.030

HEAT TREATMENT: HEAT 61923

NORMALIZED -	1650 F -	4.0 HOURS	
AUSTENITIZED -	1500 F -	5.9 HOURS	- WATER QUENCHED
TEMPERED -	1020 F -	8.0 HOURS	
STRESS RELIEVED -	1030 F -	5.0 HOURS	

Q.A. APPROVED 9-4-8

HEAT 61923 - SPEC:
ASME-SA-540-83A GRADE B24-CLASS 3 AND 1983 EDITION OF SECTION II AND III WITH ADDENDA THROUGH WINTER 1983. COMBUSTION ENGINEERING PQH-16TH OF 1980-09-16 EXCEPT SECTIONS 2.4 2.8E.2 AND 2.12 AND ADDENDUM 1A, 3A AND 4B. TIMKEN HEAT TREATING PROCEDURE 100 REV. 6 DF 1986-06-06 AND TIMKEN TEST SPECIMEN PLAN 101 REV. 5 1984-11-15 & 10 CFR-21.
"THE ABOVE CERTIFIED MATERIAL WAS MANUFACTURED IN ACCORDANCE WITH TIMKEN COMPANY'S QUALITY ASSURANCE MANUAL DATED 5-1-86 AS AUDITED AND APPROVED BY PMC INDUSTRIES ON 8-8-86."
SEE ATTACHMENTS FOR TRANSITION CURVE

411

Investigation No.
6-9-4

Customer	Heat	Type	O.D.	Lgth
P.M.C.	61923	4340MS	19.84	7,000

Charpy Transition Temperature Data

Temperature °F	Ft. Lbs.	% Shear	Lat. Exp. Inch
RT (80)	53.9	100	.034
RT (80)	55.1	100	.033
RT (80)	53.9	100	.031
-10	48.7	100	.027
-10	46.4	100	.032
-10	48.1	100	.031
-100	26.7	55	.018
-100	32.7	62	.015
-100	32.7	71	.022
-135	20.4	38	.012
-135	17.8	29	.006
-135	22.2	38	.010
-150	19.8	34	.006
-150	18.0	34	.006
-150	18.4	34	.005
-165	17.4	23	.003
-165	17.6	18	.005
-165	16.4	23	.004
-320	15.5	4	.003
-320	15.8	4	.004
-320	8.1	0	0.00

Q.A. APPROVED [illegible] 9-4-86

4R

434

NOTES:
1. INNER DIAMETER OF STUD SHALL BE 0.75" FOR ENTIRE LENGTH, I.E. MACHINE 0.31" DIAMETER TO 0.75" DIAMETER.
2. FABRICATE FROM BASE MATERIAL IDENTICAL TO BASE MATERIAL OF REACTOR COOLANT PUMP STUDS TO BE INSPECTED. PRIOR TO FABRICATION VERIFY NO LAMINAR INDICATIONS EXIST IN MATERIAL WHICH MAY AFFECT ANGLE BEAM OR STRAIGHT BEAM CALIBRATION.
3. MANUFACTURER TO DETERMINE 0° LOCATION AS REQUIRED.
4. REMOVE ALL SHARP EDGES EXCEPT AT NOTCHES AND REMOVE BURRS. OUTER AND INNER DIAMETER SURFACES SHALL BE AT LEAST 250 MICROINCHES AND BE SUFFICIENTLY FREE FROM WAVINESS.
5. A CERTIFICATION OF COMPLIANCE AND FINAL INSPECTION REPORT SHALL BE PROVIDED. AS BUILT DIMENSIONS SHALL BE INCLUDED IN THESE DOCUMENTS.
6. APPLICABLE TO ASME BOILER AND PRESSURE VESSEL CODE SECTION XI 1983 EDITION THRU SUMMER 1983 ADDENDA.

NOTCHES: ELECTRIC DISCHARGE MACHINE

7. NOTCH	LENGTH	DEPTH	WIDTH
A(EDM)	0.252"	0.107"	0.012"
B(EDM)	0.252"	0.107"	0.012"
C(EDM)	0.252"	0.107"	0.012"

NOTCH TOLERANCES:
8. NOTCH LENGTH TO BE +0" -0.007".
9. NOTCH DEPTH TO BE +0" - 0.007".
10. NOTCH WIDTH TO BE ± 0.003"
11. BOTTOM OF NOTCHES TO BE FLAT AND PARALLEL TO THE STUD SURFACES (I.E. RADIAL NOTCHES).

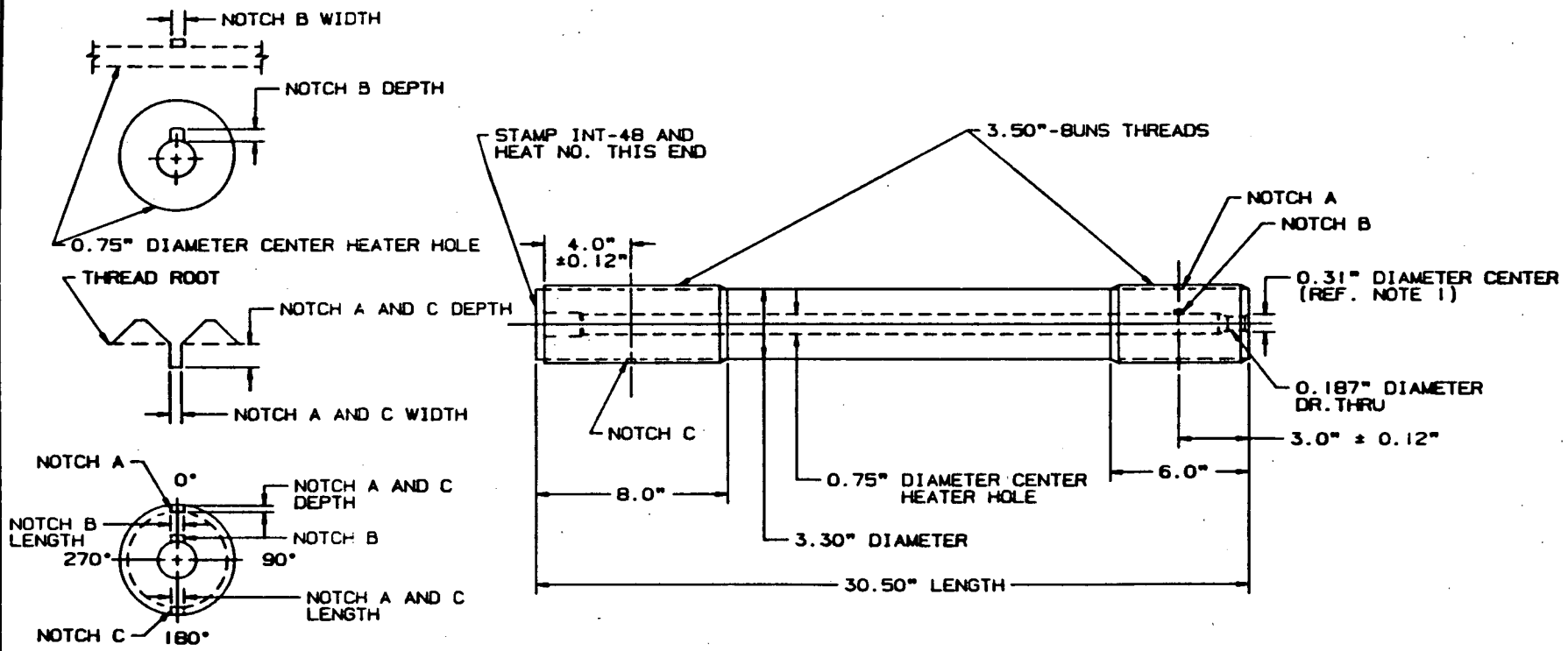

NSID TECHNICAL APPROVAL Phillip C. Burkes	DATE 7-26-88	Westinghouse Electric Corporation NUCLEAR SERVICES INTEGRATION DIVISION
LEVEL III APPROVAL Arnold Swain	DATE 7-26-88	TITLE CALIBRATION BLOCK INT-48 REACTOR COOLANT PUMP MAIN FLANGE STUD MATERIAL: A193 GRADE B7 HEAT NO.: 8085714
PRODUCT ASSURANCE APPROVAL Doug Ettinger 7/26/88	DATE 7/26/88	
PRODUCT LINE APPROVAL S. Bacon	DATE 7/26/88	SIZE C SK. NO. INT-48 REV. 0

REVISION

Nuclear Services Integration Division

QUALITY RELEASE

QR- 14[illegible]4 REV. 0

PURCHASE ORDER	PART NAME	DRAWING & REV
MN23457H	UT CALIBRATION STUDS	SEE BELOW

PART NO	DEL NOTICE NO	PO ITEM NO	PROJ/SO NO	QTY ON ORDER	QTY RELEASED
N/A	N/A	SEE BELOW	IN81DA459	2	2

SUPPLIER	E SPEC & REV	ORDER
TOOLING SPECIALISTS INC.	N/A	COMPLETE ☒ YES ☐ NO

SERIAL OR IDENTIFICATION NOS

POIT#	DESCRIPTION	DWG#	NO RELEASED
001	RV STUD CAL BLOCK	INT-47 R0	1
002	RCP STUD CAL BLOCK	INT-48 R0	1

The equipment shown hereon is released by W Quality Assurance. Shipment may be made subject to authorization by W Purchasing. In the Audit Checklist below, an A indicates acceptability, a C indicates a contingency and a W indicates that W QA has waived the auditing or witnessing of the attribute. All non-applicable items are lined out.

AUDIT CHECKLIST

☐ ~~Material Certifications~~	☐ ~~Non-Operating Electrical Tests~~
☐ ~~Heat Treat Records~~	☐ ~~Operating Electrical Test~~
☐ ~~RT Film and Records~~	☐ ~~Pressure Test~~
☐ ~~PT/MT Records~~	☐ ~~Seat Tightness Test~~
☐ ~~Visual~~	☐ ~~Performance Test~~
☒ A Dimensional ATTACHED	☒ A Cleanliness
☒ A UT Records	☒ W Packaging
☐ ~~Personnel Qualification: Welding, NDT~~	☐ ~~Code Form~~
☒ A CERTIFICATE OF COMPLIANCE	☐ ~~Painting~~
☐	☐

DEVIATION NOTICES AND REMARKS (ALL DEVIATIONS HAVE BEEN APPROVED BY THE RESPONSIBLE WESTINGHOUSE ENGINEER UNLESS A SPECIFIC EXCEPTION IS STATED)

RELEASED FOR SHIPMENT TO INT

THE SUPPLIER CERTIFIES that for the equipment and material released, all contractual requirements have been met. Approved deviations, if any, are listed above.

SUPPLIER SIGNATURE Paul M Puttman DATE 10-6-88

TITLE QA Manager

The equipment shown hereon is released by W Quality Assurance. Shipment may be made subject to authorization by W Purchasing

The equipment supplier has certified that the equipment above meets all requirements of the purchase order, drawings and specifications. Westinghouse has reviewed evidence supporting this release and except as specified above has detected no deviations from such requirements. This release does not waive any rights Westinghouse may have under the purchase order including Westinghouse's right to reject the equipment upon discovery of any such deviations after arrival at destination.

B B Shumaker 10-6-88

Westinghouse Quality Assurance Representative

NSID 1010 11 84

REQUISITIONER

425

TOOLING
SPECIALISTS
INCORPORATED

MACHINE TOOL BUILDERS — SPECIAL MACHINING — DIES — ENGINEERING SERVICE

P. O. Box 828, Latrobe, Pa. 15650 Phone: (412) 539-2534

CERTIFICATE OF COMPLIANCE

Date: Oct. 6, 1988

Westinghouse Electric Corporation
Nuclear Energy Systems
P. O. Box 355
Pittsburgh, PA 15230

Gentlemen:

This is to certify that the products shipped to you, per the information listed below, comply to the requirements of this order.

All required tests and inspections have been performed.

Documented evidence of compliance supporting this certification is available at our facility for review.

Westinghouse Purchase Order Number: MN-23457-H NSDN Number: N/A

TSI Shop Order Number: 5661 Westinghouse QR: 14954 REV. 0

Description:

(1) each P.O. Item 001, Machine And Add Notches per Dwg. #INT-47

(1) each P.O. Item 002, Machine And Notches per Dwg. #INT-48

Very truly yours,

Paul M. Prettiman

Paul M. Prettiman
Quality Control Manager

PMP/jk

426

INSPECTION REPORT

Page 1 of 1

TOOLING SPECIALISTS, INC.
Latrobe, Pa. 15650
Phone: (412) 539-2534

Dwg. # INT-48
P. O. # Item 002 MN-23457-H
Revision 0
Iter —
Work Order # 5661

CUSTOMER:

(W)

PART DESCRIPTION: Material: A193 Grade B7, Heat No. 8085714
1 Calibration Block INT-48, Reactor Coolant pump, Main Flange Stud.

IF OUT OF TOLERANCE, PLACE X IN BOX TO RIGHT OF DIMENSION.

DRAWING DIMENSIONS	Part No. X INT-48	Part No. X	Part No. X	Part No. X	Part No. X	~~Part No.~~ Gage No
3.0" ±0.12 To Notch "A"	3.02"					142
3.0" ±0.12 To Notch "B"	3.02"					142
4.0" ±0.12 To Notch "C"	4.02"					142
Notch "A"						
0.252" +.0 -.007 Length	.247"					Replica
0.107" +.0 -.007 Depth	.101"					149
0.012" ±.003 width	0.011"					150
Notch "B"						
0.252" +.0 -.007 Length	.247"					Electrod.
0.107" +.0 -.007 Depth	0.103"					149
0.012" ±.003 width	0.012"					Electrod.
Notch "C"						
0.252" +.0 -.007 Length	0.247"					Replica
0.107" +.0 -.007 Depth	0.102"					149
0.012 ±.003 width	0.013"					150

INSPECTOR: Warren J. Jones 10/4/88

RECEIVING INSPECTOR:

427

PA 1751
REV 0
6/8/79

DATA PACKAGE
TABLE OF CONTENTS

Customer Purchase Order	WEMD Shop Order	Project	Customer Shop Order	Quality Release No.	Assembly Identification: Serial Number (S/N)	Fiche Rev.
N/A	Q 159	N/A	125	E-84529-0	MAIN FLANGE STUD	0

Supplier: Westinghouse Electro-Mechanical Division, Cheswick, PA 15024

Document	Page
1. Table of Contents -- PA 1751	1
2. Assembly Release Data:	
a. Westinghouse Quality Release	2
b. Deviation Notices -- Form W54018 (if applicable)	N/A
3. Material Certifications and NDE	3-6
4.	
5.	

Final verification for completeness of data (as itemized above) by:

WEMD QA Records R. G. Luma Date 6/30/88

419

Form 54126K

QUALITY RELEASE

WESTINGHOUSE ELECTRIC CORPORATION

QR E - 84529 REV. 0

(E-EMD) (P-PENSACOLA)
(N-NEED) (T-TAMPA)

C.D.	BASE P. O.	PROJECT P. O.	PROJECT	WRD S. O. NO.	DATE (MO DAY YR.)
N/A	N/A	N/A	N/A	125	063088

GENERAL ORDER NO.	DIV./PLANT S.O.NO.	PAR(BASE)	PAR(PROJ)	CN(BASE)	CN(PROJ)
XA 02950	Q-159	N/A	N/A	N/A	N/A

EQUIP.SPEC.NO.& REV.(BASE)	EQUIP.SPEC.NO.&REV.(PROJECT)	DRAWING NO.	REV.	~~GROUP~~ ITEM
N/A	N/A	856C808	6	1

P.O. ITEM NUMBER	SPIN NUMBER	PART NAME	QTY. RELEASED
N/A	N/A	MAIN FLANGE STUD	1

SERIAL OR IDENTIFICATION NUMBERS

MAIN FLANGE STUD - DWG. 856C808-H01-REV. 6 - HEAT NO. 8085714

The attributes listed below have been reviewed and approved by QC/QA as noted by an A in the status column. Non-applicable items are lined out. Records are available for review. Contingent items are identified by "C" on the status column and explained in the remarks section.

CHECKLIST

STATUS		STATUS		STATUS	
A	Material Certifications		~~Operating Electrical Test Records~~		~~ASME Data Report Form(s)~~ (ATTACHED)
	~~Heat Treat Records~~		~~Non-Operating Elec. Test Records~~		Certified Stress Report
	~~RT Film and Records~~		~~Pressure Test Records~~		~~Special Handling, Storage & Install. Instruc.~~
	~~PT Records~~		~~Seat Tightness Test Records~~	A	DATA PACKAGE (ATTACHED)
A	MT Records		~~Performance Test Records~~		
A	UT Records		~~Welding Personnel Qual. Cert.~~		
A	Visual Inspection Records	A	NDE Personnel Qual. Cert.		
A	Dimensional Inspection		~~Painting~~		
A	Cleanliness	A	Packaging		

AUDIT

CUSTOMER QA DATA PACKAGE REQUIRED BY PURCHASE ORDER: ☒ YES ☐ NO DEVIATION NOTICE(S) ☒ NONE ☐ APPLICABLE DN(S) LISTED BY DN NUMBER BELOW (COPY ATTACHED TO SHIPPING PAPERS)

REMARKS

WEMD INFORMATION:
WAF No. B-02950

THE SUPPLIER CERTIFIES that for the equipment and material released, all contractual requirements have been met. Approved deviations, if any, are listed above.

SUPPLIER	P.O. NUMBER
N/A	N/A
SUPPLIER SIGNATURE	DATE
N/A	N/A

This equipment shown hereon is released by Quality Assurance. Shipment may be made subject to authorization by Purchasing.

The equipment supplier has certified that the equipment above meets all requirements of the purchase order, drawings and specifications. Westinghouse has reviewed evidence supporting this release and except as specified above has detected no deviations from such requirements. This release does not waive any rights Westinghouse may have under the purchase order including Westinghouse's right to reject the equipment upon discovery of any such deviations after arrival at destination.

Westinghouse Quality Assurance Representative

420

PRODUCT ASSURANCE

BENEDICT - MILLER, INC.

"FINE STEELS"

MARIN AVENUE AND ORIENT WAY

LYNDHURST, NEW JERSEY 07071

REPORT OF CHEMICAL AND PHYSICAL TESTS

Date Feb. 11, 1970

Customer's Order No. 8728

Our Order No. B 11640

LKS-38

1/16/70

R.E.C. Corp.
47 Cedar St.
New Rochelle, N.Y. 10801

RECEIVED
FEB 17 '70
REC CORPORATION

Westinghouse P.O. 57-E-37516
Item A
12 Studs. 856C808 H01 Rev. 6

MATERIAL AND SPECIFICATIONS

Item	
A	7 pcs. 5177# B.R. 4140 HT & SR 3 1/2" dia. x 21/24 ft. ASTM A-193 Grade B-7
B	
C	
D	
E	

CHEMICAL ANALYSIS

Item	Heat No.	Carbon	Manganese	Phosphorus	Sulphur	Silicon	Nickel	Chromium	Molybdenum		
A	8085714	.435	.88	.012	.021	.27		.90	.17		
B											
C											
D											
E											

PHYSICAL PROPERTIES

Item	Tensile Strength	Yield Point	Elongation	Reduction	Hardness	Bend Test	Grain Size	Machinability
A	145000	103000 - .02 115500 - .2	17.5	56	277/302		7	
B								
C								
D								
E								

We hereby certify that the chemical and physical properties shown above are in accordance with the reports furnished by the producing mill covering the heats of steel from which this material was furnished.

BENEDICT-MILLER, INC.

By [illegible]
Authorized Agent

4/21

City Testing [redacted]

250 WEST 54th STREET [redacted] NEW YORK, N.Y. [redacted]

(5)

REPORT OF TESTS

Reference [redacted]

MATERIAL 4140 Alloy Steel Rods

Your Order [redacted]

FROM R. E. C. Corporation
New Rochelle, N.Y. 10801

Specification [redacted] Code [redacted] III

Identification: 3/4 inch diameter, (3 rods)
Heat No. 8085714

Charpy Impact Test

Specimen Type	"V" Notch
Specimen Size, mm	10 x 10
Test Temperature	plus 10 F

	Impact Values, ft.-lbs.	Required
	32	
	45	
	41	
Average:	39	30 Minimum

REMARKS

Submitted rods conform to the requirements noted above.

We certify that this report is a true report of results obtained from our tests of this material

Tests by H. Goldenberg
Asst.Tech.Dir.

Date Feb. 27, 1970 Witnessed by

Subscribed and sworn to before me this ____ day of ____ 19

VIKING LABORATORIES INC.
OVERLOOK ROAD P O BOX 2074 • POUGHKEEPSIE NEW YORK 12603 • 914-4[illegible]

R.E.C. Corporation
47 Cedar Street
New Rochelle New York

March 9 1970

Customers Number D 5443

Our Reference 1084

3 1/2" round - Alloy B-7 Heat No. 8085714

3 pcs	93" Long
1 pc	124" Long

The above bars were Ultrasonic Tested as per R.E.C. Corporation Ultrasonic Test procedure No. UTP-2 Rev 2 dated Sept. 15 1969.

The above material is acceptable when ultrasonic inspected as per R.E.C. test procedure UTP-2 Rev 2 dated Sept 15, 1969.

Harold R. Denfeld

Harold R. Denfeld

CERTIFICATE OF ANALYSIS AND [redacted]

To Westinghouse Elec. Corp.
Electro-Mechanical Div.
Cheswick, Pa., 15024
ATT: Mr. G.P.Schill/Buyer

DATE [redacted]

CUS[redacted] 57-E-37[redacted]

OUR ORDER NO. 15525

DESCRIPTION OF MATERIAL AND SPECIFICATIONS

1. STUDS W DRAWING 856C808 H01 Revision 6

   3-1/2" - 8 x 30.50

2.

3.

4.

CHEMICAL ANALYSIS

Benedict-Miller 8085714 - see mill reports attached-

MECHANICAL PROPERTIES

- see mill reports attached -

SPECIAL TESTS

This material was magnetic particle inspected per REC procedure MP-2 dated 9/1/69. Required plating conforms to specification PDS 80016 BT-C. Ultrasonic test certification and charpy Impact test results are attached.

Sworn and Subscribed to before me this 7th day of Aug. 19 70

Irving T. Hirsch

IRVING T. HIRSCH
NOTARY PUBLIC, New York

We hereby certify that the foregoing data is a true copy of the data furnished us by the producing mill or testing laboratory

R E C CORPORATION

Genevieve Bingman

R. E. C. CORPORATION 47 CEDAR ST., NEW ROCHELLE, N. Y.

478

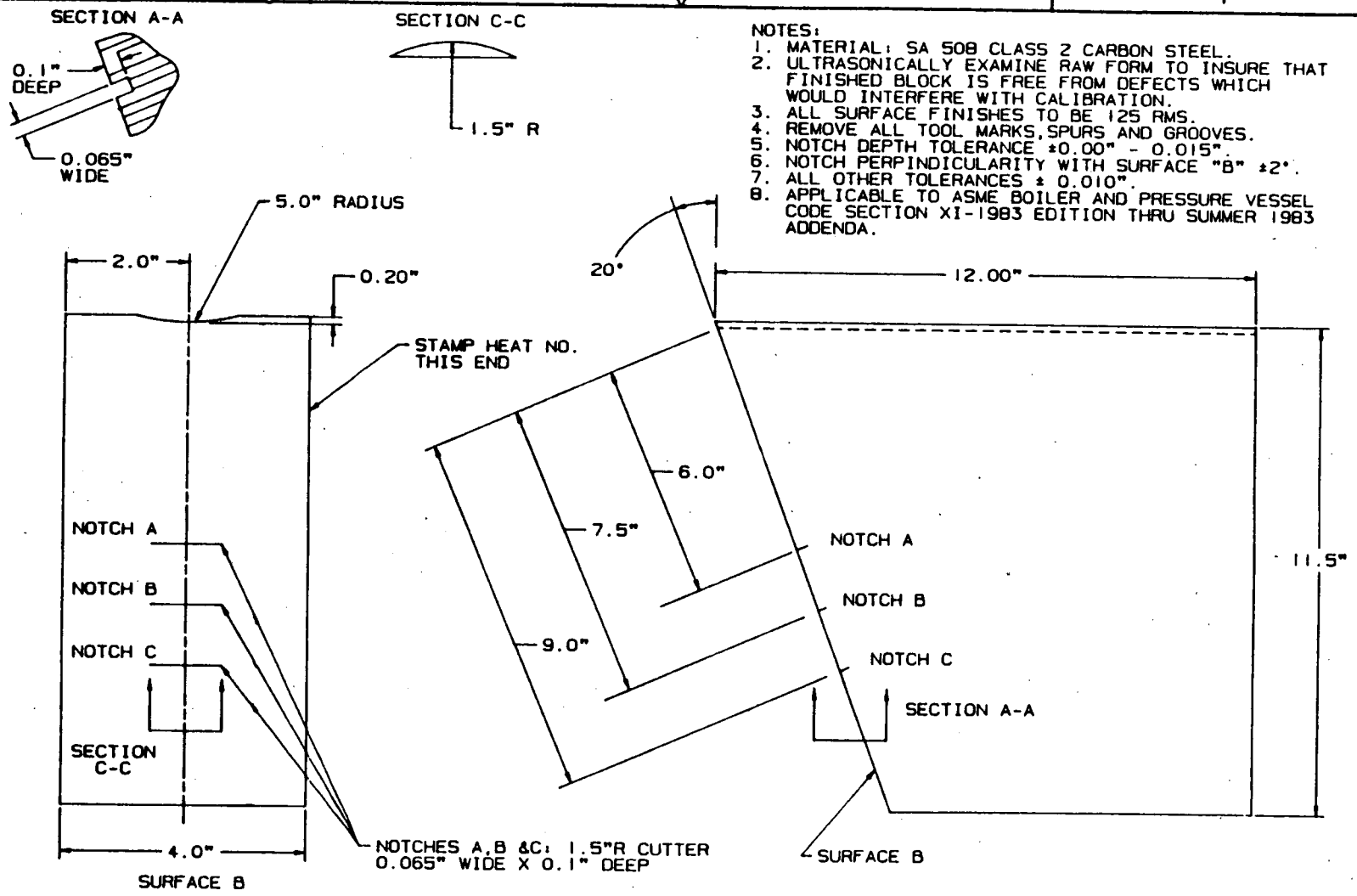

NOTES:
1. MATERIAL: SA 508 CLASS 2 CARBON STEEL.
2. ULTRASONICALLY EXAMINE RAW FORM TO INSURE THAT FINISHED BLOCK IS FREE FROM DEFECTS WHICH WOULD INTERFERE WITH CALIBRATION.
3. ALL SURFACE FINISHES TO BE 125 RMS.
4. REMOVE ALL TOOL MARKS, SPURS AND GROOVES.
5. NOTCH DEPTH TOLERANCE ±0.00" - 0.015".
6. NOTCH PERPINDICULARITY WITH SURFACE "B" ±2°.
7. ALL OTHER TOLERANCES ± 0.010".
8. APPLICABLE TO ASME BOILER AND PRESSURE VESSEL CODE SECTION XI-1983 EDITION THRU SUMMER 1983 ADDENDA.

NSID TECHNICAL APPROVAL Phillip C Baker	DATE 5-25-88	Westinghouse Electric Corporation NSID-INSPECTION SERVICES
LEVEL III APPROVAL	DATE 5-25-88	TITLE CALIBRATION BLOCK INDIAN POINT UNIT NO. 3 REPLACEMENT STEAM GENERATOR FEEDWATER NOZZLE INNER RADIUS
PRODUCT ASSURANCE APPROVAL	DATE 5/26/88	
PRODUCT LINE APPROVAL	DATE	SIZE C / SK. NO. INT-50 / REV. 0

Nuclear Services Integration Division

QUALITY RELEASE

QR- 14952 REV. 0

PURCHASE ORDER	PART NAME	DRAWING & REV
MN23456R	CALIBRATION BLOCK	INT-50 Rev 0

PAR NO	CHG NOTICE NO	P O ITEM NO	PROJ/S O NO	QTY ON ORDER	QTY RELEASED
N/A	N/A	001	IVC8I WA459	1	1

SUPPLIER	E SPEC & REV	ORDER
TOOLING SPECIALISTS, INC	N/A	COMPLETE ☒ YES ☐ NO

SERIAL OR IDENTIFICATION NOS

INT-50

HT NO 31-3212

The equipment shown hereon is released by W Quality Assurance. Shipment may be made subject to authorization by W Purchasing. In the Audit Checklist below, an A indicates acceptability, a C indicates a contingency and a W indicates that W QA has waived the auditing or witnessing of the attribute. All non-applicable items are lined out.

AUDIT CHECKLIST

☒ Material Certifications ATTACHED	~~☐ Non-Operating Electrical Tests~~
~~☐ Heat Treat Records~~	~~☐ Operating Electrical Test~~
~~☐ RT Film and Records~~	~~☐ Pressure Test~~
~~☐ PT/MT Records~~	~~☐ Seat Tightness Test~~
☒ Visual	~~☐ Performance Test~~
☒ Dimensional ATTACHED	☒ Cleanliness
☒ UT Records ATTACHED (BY W)	W Packaging
☒ Personnel Qualification: Welding, NDT	~~☐ Code Form~~
☒ CERTIFICATE OF COMPLIANCE	~~☐ Painting~~
☐	☐

DEVIATION NOTICES AND REMARKS (ALL DEVIATIONS HAVE BEEN APPROVED BY THE RESPONSIBLE WESTINGHOUSE ENGINEER UNLESS A SPECIFIC EXCEPTION IS STATED)

RELEASED FOR SHIPMENT

THE SUPPLIER CERTIFIES that for the equipment and material released, all contractual requirements have been met. Approved deviations, if any, are listed above.

SUPPLIER SIGNATURE Paul M Puttiman DATE 8-8-88

TITLE QA Manager

The equipment shown hereon is released by W Quality Assurance. Shipment may be made subject to authorization by W Purchasing.

The equipment supplier has certified that the equipment above meets all requirements of the purchase order, drawings and specifications. Westinghouse has reviewed evidence supporting this release and except as specified above has detected no deviations from such requirements. This release does not waive any rights Westinghouse may have under the purchase order including Westinghouse's right to reject the equipment upon discovery of any such deviations after arrival at destination.

B B Lhumke 08-08-88

Westinghouse Quality Assurance Representative

NSID 1010 11-84

REQUISITIONER

TOOLING SPECIALISTS, INC.
CERTIFICATION LETTER OF COMPLIANCE

DATE: August 4, 1988

TO: Westinghouse Electric Corporation
Nuclear Energy System
P. O. Box 355
Pittsburgh, Pa. 15230-0355

Tooling Specialists, Inc. certifies that all purchase order requirements have been met fo the following equipment and material. Any deviations from the order requirements have ha Westinghouse NES approval prior to shipment. Deviation Notice (D/N) numbers applicable are _____ (N/A if not applicable).

Westinghouse Purchase Order Number MN 23456R
P.O. Change Notice number (s) _____
Procurement Advisory Release (PAR) number (s) _____

Quantity	P.O. Item #	DWG. or Sketch and Rev. #	Base Mat'l & Heat #	Weld Joining Mat'l & Heat #	Claddir and He
1	01	INT-50	31-3212		

Weld joining procedure used _____ (include revision #)

cladding procedure used _____ (include revision #)

heat treating procedure used _____ (include revision #)

One copy each of the following documents as required by the purchase order are attached t this letter. All (including letter) are included with this shipment.

- X Westinghouse Quality Release
- X Base material mill test report (s)
- ___ Weld operator certification
- ___ Heat treat chart (s)
- X Inspection Report
- ___ Weld joining material mill test report
- ___ Cladding material mill test report
- X Other Letter of Compliance Westinghouse UT Inspection Report

One additional copy each of this letter and the above documents are hereby forwarded to t Westinghouse Buyer.

All records supporting this certification letter are available at Tooling Specialists.

(signature)

Tooling Specialists, Inc.

INSPECTION REPORT

Page 1 of 1

TOOLING SPECIALISTS, INC.
Latrobe, Pa. 15650
Phone: (412) 539-2534

Dwg. # INT-50
Revision 0
Item -
P.O # Item 0001 MN 23456R
Work Order # 5617

CUSTOMER: (W)

PART DESCRIPTION: Heat No. 81-3212
1 Calibration Block Indian Point Unit #3 Replacement Steam Generator Feedwater Nozzle Inner R.

IF OUT OF TOLERANCE, PLACE X IN BOX TO RIGHT OF DIMENSION.

DRAWING DIMENSIONS	Part No. INT-50	X	Part No.	X	Part No.	X	Part No.	X	Part No.	X	~~Part No.~~ Gage No.
Notch "A"											
1.5" R Cutter	1.500										142
0.065" wide	0.066										355
0.1" deep	0.100										142
Notch "B"											
1.5" R Cutter	1.500										142
0.065" wide	0.066										355
0.1" deep	0.100										142
Notch "C"											
1.5" R Cutter	1.500										142
0.065" Wide	0.066										355
0.1" deep	0.100										142
2.0"	2.006										142
4.0"	4.004										142
5.0" Radius	5.00										142
0.20"	.197										149
11.5"	11.50										149
12.00	11.998										149
20°	20°										142
6.0" To Notch "A"	5.995										142
7.5" To Notch "B"	7.495										142
9.0" To Notch "C"	8.995										142
Stamp Heat No.	OK										Visual
Notes #1 Thru 8	OK										

INSPECTOR: Thomas J. Jones 8-8-88

RECEIVING INSPECTOR:

Royce Aerospace Materials Corp.
7200 New Horizons Blvd., N. Amityville, New York 11701
Telephone 516-225-1000

CERTIFICATE OF ANALYSIS

FOR
TOOLING SPECIALISTS
P.O. Box 828
Latrobe, Pa 15650

CUSTOMER'S ORDER NO.	INVOICE NO.	INVOICE DATE
210	3352-23	3-29-85

DESCRIPTION

HEAT	MILL	SIZE	CONDITION	SPECIFICATIONS
31-3212		8 x 24 x 42"Lg.		SA 508 Cl. 2

CHEMICAL ANALYSIS

C	MN	SI	P	S	CR	NI	CO	MO	W	TI	AL
.24	.67	.28	.009	.006	.38	.68		.62			

B	ZR	FE	CB+TA	V	O_2	N_2	H_2	Cu			
				.02							

PHYSICAL ANALYSIS

1000 PSI / PERCENT

U.T.S.	.2% Y.S.	.02% Y.S.	E%	R.A.%	TEMP.	HARDNESS	HEAT TREATMENT

STRESS RUPTURE

HRS.	E% (PERCENT)	R.A.% (PERCENT)	STRESS (1000 PSI)	TEMP.	HARDNESS	HEAT TREATMENT

BEND TEST:
GRAIN SIZE: MACRO:
DECARBORAZATION: MICRO:
EMBRITTLEMENT:

ADDITIONAL TESTING

WE CERTIFY THAT THE RESULTS HEREIN NOTED ARE TRUE AND CORRECT TO OUR KNOWLEDGE AND CONTAINED IN OUR CORPORATION RECORDS.

SWORN AND SUBSCRIBED

NOTARY PUBLIC

MY COMMISSION EXPIRES

Westinghouse
Electric Corporation

Power Systems

Nuclear Service
Integration Division

Box 355
Pittsburgh Pennsylvania 15230-0355

On June 30,1988 SA508 material Heat No.31-3212 to be used under P.O. MN23456-for calibration block INT-50 was ultrasonically tested for laminations.Scanning was performed by setting a back signal from the material at a location free of laminations and set at 80% of full screen height.Equipment used were Sonic Mark 1 Scope Serial No. 07853E and 0.5" Diameter Transducer P47134.All equipment was certified and records are on file at Westinghouse-Waltz Mills.Utliizing this U/T Method,I found no Laminar Indications in this material.

Timothy J Bold

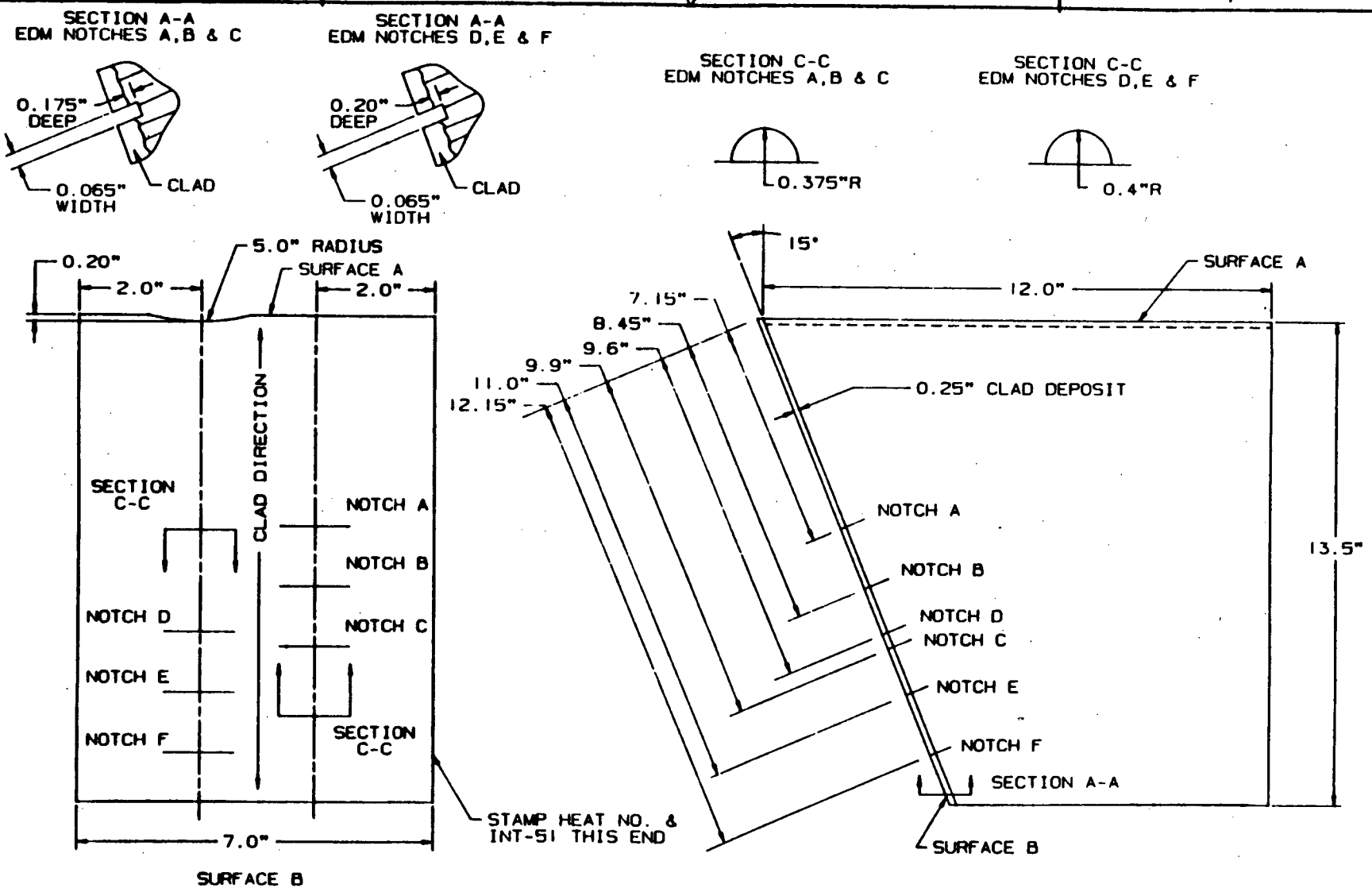

NSID TECHNICAL APPROVAL Phillip C. Baker	DATE 10-17-88	Westinghouse Electric Corporation NSD-INSPECTION SERVICES
LEVEL III APPROVAL	DATE	TITLE CALIBRATION BLOCK INDIAN POINT UNIT NO.3 REPLACEMENT STEAM GENERATOR PRIMARY NOZZLE INNER RADIUS
PRODUCT ASSURANCE APPROVAL	DATE 10/17/88	
PRODUCT LINE APPROVAL	DATE 10/18/88	SIZE C · SK. NO. INT-51 SH. 1 OF 2 · REV. 0

NOTES:

1. MATERIAL: SA 508 CLASS 2 CARBON STEEL OR SA 508 CLASS 3 CARBON STEEL.
2. ULTRASONICALLY EXAMINE RAW FORM AND PRIOR TO ADDING NOTCHES TO INSURE THAT FINISHED BLOCK IS FREE FROM DEFECTS WHICH WOULD INTERFERE WITH CALIBRATION.
3. ALL SURFACES 125 RMS PRIOR TO CLADDING.
4. THE CLADDING PROCESS SHALL BE CONTROLLED TO MINIMIZE HEATING OF THE BASE METAL AND REDUCE THE RISK OF SUB-SURFACE CRACKING. THEREFORE THE CLADDING PROCEDURE SHALL BE SUBJECT TO APPROVAL FROM WNSD OR WNATD PRIOR TO CLAD APPLICATION.
5. MANUALLY CLAD, USING MANUAL SHIELDED METAL ARC, SFA 5.4 CL E309L FOR FIRST LAYER AND E308L FOR BALANCE (REFERENCE W NCD WELDING SPECIFICATION NUMBER 4064-1,2,3,4.
6. CLAD THICKNESS TOLERANCE 0.25"T ± 0.020".
7. PREPARE SURFACE "B" BY FEATHERING "AS CLAD" TO 250 RMS EQUIVALENT.
8. REMOVE ALL TOOL MARKS, SPURS AND GROOVES.
9. NOTCHES A,B,C,D,E & F ELECTRO DISCHARGE MACHINE.
10. NOTCH DEPTH TOLERANCE + 0.00" - 0.015".
11. NOTCH WIDTH TOLERANCE + 0.00" - 0.025".
12. NOTCH PERPENDICULARITY WITH SURFACE "B" ±2°.
13. ALL OTHER TOLERANCES ± 0.010".
14. APPLICABLE TO ASME BOILER AND PRESSURE VESSEL CODE SECTION XI-1983 EDITION THRU SUMMER 1983 ADDENDA.

NSID TECHNICAL APPROVAL Phillip C. Burke	DATE 10-21-88	Westinghouse Electric Corporation NSD-INSPECTION SERVICES
LEVEL III APPROVAL	DATE 10-21-88	TITLE CALIBRATION BLOCK INDIAN POINT UNIT NO.3 REPLACEMENT STEAM GENERATOR PRIMARY NOZZLE INNER RADIUS
PRODUCT ASSURANCE APPROVAL	DATE 10/21/88	
PRODUCT LINE APPROVAL	DATE 10/21/88	SIZE C · SK. NO. INT-51 SH.2 OF 2 · REV. 1

Change following notes to read:

10. Notch depth tolerance +0.015"/-0.015".

13. All other tolerances ± 0.080"

Add Note 15:

15. Thickness and length tolerance +0.50"/-0.00"

Phillip C. Bukes	12-5-88
NSD Technical Approval	Date
David Kurek	12-14-88
Level III Approval	Date
	12/14/88
Product Assurance Approval	Date
S Daus	12/15/88
Product Line Approval	Date

Westinghouse
Electric Corporation

Energy Systems

Nuclear Services Division

Box 355
Pittsburgh Pennsylvania 15230-0355

On October 20,1988 SA508 Class 2 Material Heat No.6-5858 to be used for Calibration Block INT-51 was ultrasonically tested for laminations. Scanning was performed by setting a back signal from the material at a location free of laminations and set at 80% of full screen height. Equipmnet used was a Krautkramer USM2 Scope and a 1.0" Diam. 1.0 MHZ straight Beam S/N 19988.

Utliizing this Ultrasonic Technique,I found No Laminar Indications in material to be used for Calibration Block INT-51.

Examination was performed prior to start of machining of calibration block.

Phillip E. Bukes 10/20/88

Phillip E. Bukes Level II

Westinghouse
Electric Corporation

Nuclear Components Division

Box 1313
Pensacola Florida 32596
904-477 0535

On November 9, 1988, SA 508 Class 2 Material Heat Number 6-5858 for Calibration Block INT-51 was ultrasonically tested for defects on the clad area which would affect calibration. This exam was performed following clad application and prior to machining of notches.

Scanning was performed utilizing U/T Sonic Mark 1 Scope S/N 06209E and the following transducers:

A. 0° - .50" Diameter - 2.25 MHZ - S/N C01591

B. 0° - 1.0" Diameter - 2.25 MHZ - S/N A31608

C. 45° - .50" x 1.0" Diameter - 2.25 MHZ - S/N B14656

D. 26°L - .50" x 1.0" Diameter - 2.25 MHZ - S/N D15535

Scanning was performed by either maintaining a back signal at 80% of Full Screen Height or observing clad roll. Utilizing these methods no defects in the clad surface area of calibration block INT-51 was observed which would affect calibration.

Level II George A Morris II 11-9-88
Date

Level II William S Halley 11-9-88
Date

ATC-1018

Westinghouse Electric Corporation — ROUTE SHEET — PENSACOLA DIVISION

WOP ORDER	ASSIGN ITEM	QTY	NAME	MATERIAL	LOT NO	DATE	PAGE NO
		1	CALIBRATION BLOCK	SA 508 CL 2		10/27/88	1/2

DRAWING	ITEM	ISSUE	WRITTEN BY	G.C. ENG	ACCT. NO	CHARGE NUMBER	CHARGE TO COST CENTER	MRB/MRN OR REQ NUMBER	ESTIMATED HOURS
INT 51			[signature]	D GAERTNER [signature]		STVL PAA04 ~~MPAGL H468~~	10/27/88		

	G.C.	MACH	OPERATION DESCRIPTION	MI	SET UP	RUN	SOURCE	PART LOCATION	MOD MIN	SIGNATURE/DATE
			SECTION XI CALIBRATION BLOCK FOR							
			NYPA INDIAN POINT 3							
			MATERIAL IS SUPPLIED BY NSD AND							
			IS ROUGH MACHINED WITH APPROX .5 IN							
			EXCESS STOCK							
10	326	INS	CHECK DIMENSIONS AND MATERIAL							[signature]
			CERTIFICATION HEAT CODE HT6-5858							11/1/88
20	ATC		PREPARE SURFACE FOR CLADDING							[signature]
30	326	INS	PENETRANT EXAM SURFACE TO BE CLAD							11-1-88 [signature]
			PER QIP 8102							
40	ATC		CLAD SURFACE PER DRAWING USING						11-4-88	PD 5247
			WPS 4064 ALLOW EXTRA CLADDING TO							
			PERMIT FINISHING TO THICKNESS SHOWN							
			ON DRAWING RECORD CLADDING MATERIAL							
			HEAT CODES							
			FIRST LAYER SFA 5.4 CLASS E309L HEAT CODE: JC04							
			BALANCE LAYERS SFA 5.4 CLASS E308L HEAT CODE: ER39							
50	ATC		GRIND CLAD SURFACE FOR UT & PT						11-4-88	PD 5247
60	326	INS	PT CLAD SURFACE PER QIP 8102							[signature]

F27174

ATC-1018

Westinghouse Electric Corporation — ROUTE SHEET

PENSACOLA DIVISION

MOD ORDER	ASSIGN ITEM	QTY	NAME	MATERIAL	LOT NO	DATE	PAGE NO
			CALIBRATION BLOCK	SA508 CL 2		10/27/88	2/2

DRAWING	ITEM	ISSUE	WRITTEN BY	Q C ENG	ACCT. NO	CHARGE NUMBER	CHARGE TO COST CENTER	MRR/MRN OR REQ NUMBER	ESTIMATED HOURS
INT 51			[signature]	D GAERTNER					72

OP	CC	MACH	OPERATION DESCRIPTION	MI	SET UP	RUN	SOURCE	PART LOCATION	MRR MRN	SIGNATURE/DATE
170	326	UT1	UT CLAD SURFACE FOR UNDER CLAD CRACKS PER QIP 8810 REV03 AND LACK OF BOND [signature] 11/6/88							[signature] 11/6/88 LEVEL III
180	ATC		POST WELD HEAT TREAT PER WPS 4064. MAINTAIN CHARTS							11-7-88 [signature]
190	316	ATC	MACHINE TO FINAL CONFIGURATION LESS EDM SLOTS							11-9-88 [signature]
200	306	EDM	EDM SLOTS							11/14/88 [signature]
210	326	INS	RECORD AS BUILT DIMENSIONS							[signature] QA35 11/16/88

M NO 837174

QIP RECORDING FORM

POST WELD HEAT TREAT RECORDING FORM **RECORDS**

Drawing	Item	Sub Used	Description	Identity #	QIP No.	Operation
N/A	N/A	N/A	UT Cal. Block	ATC-1018	3146	080

Shop Order	No. Inspected	No. Rejected	MRR/MRN No.	Inspector/Stamp/Date
N/A	1	0	—	R. Lawrence

Return to QA Records [X] Copy to: [X] QAE [ ] ME [ ] Other

VERIFY T/C'S ARE ATTACHED IN ACCORDANCE WITH APPLICABLE DMP 5524 SKETCH

Larry W. Lawrence 5247

INSPECTORS'S STAMP

PWHT/DMP-1504-5524 REV 24

MAXIMUM (°F/HR) HEATING RATE 100°F

MAXIMUM (°F/HR) COOLING RATE 100°F

CONSERVATIVE SOAK TIME (MAX.)

First In T/C # —

Last Out T/C # —

HOURS IN SOAK —

COMPONENT SOAK TIME (MIN.)

Last In T/C # 20

First Out T/C # 8

HOURS IN SOAK 2 Hours 54 min

THERMOCOUPLE RECORDER CALIBRATION DATE _____

FURNACE PWHT [✓] LOCAL PWHT [ ]

RECORDER NUMBER _____

T/C #	COMP. H/C	T/C #	COMP. H/C	T/C #	COMP. H/C	T/C #	COMP. H/C
8	HT6-58						
20	HT6-58						

SOAKING TEMPERATURE _____

HOURS @ SOAKING TEMPERATURE 2 Hours 54 min

START HEATING CYCLE @ 800 °F DATE 11-6-88

END COOLING CYCLE @ 900 °F DATE 11-7-88

REVIEWED BY:

QUALITY CONTROL INSPECTOR _____ DATE _____

QUALITY ASSURANCE ENGINEER _____ DATE _____

AUTHORIZED NUCLEAR INSPECTOR _____ DATE _____

Quality Assurance Engineer	Date	Manufacturing Engineer	Date
J. Chesney	12/16/87	[signature]	12-16-87

REV	DATE	QE	ME	REV	DATE	QE	ME	REV	DATE	QE	ME	REV	DATE	QE	ME
05	10/14/87	[illegible]	[illegible]												

WESTINGHOUSE NUCLEAR COMPONENTS DIVISION

QIP RECORDING FORM — LIQUID PENETRANT (PT) EXAMINATION — PAGE 1 OF 1

SHOP ORDER #	DRAWING	ITEM	SUB	W SERIAL NUMBER	W HEAT CODE NUMBER
N/A	N/A	N/A	N/A	N/A	6-5858

#INSPECTED	#REJECTED	MRR/MRN#	REF MRR	INSPECTOR/STAMP/DATE	* LEVEL	OPER #
001	000	N/A	N/A	[signature] 11-1-88	II	030

ORIGINAL TO QA RECORDS — COPY TO [X] NDE SERVICES [ ] MFG ENGRG [ ] OTHER

JOINT/SEAM IDENTIFICATION	P.O. NUMBER (IF APPLICABLE)	SUPPLIER (IF APPLICABLE)
WELD PREP		

THE ABOVE DEFINED COMPONENT/ASSEMBLY HAS BEEN LIQUID PENETRANT (PT) EXAMINED PER QIP 8102 REV 18.

* SNT-TC-1A CERTIFICATION LEVEL

"X" OR FILL IN BLOCK(S)

[ ] WELD [X] BASE MATERIAL [ ] BACKCHIP
[X] WELD PREP [ ] ROOT PASS [ ] OTHER_____

METHOD: [X] SOLVENT REMOVABLE [ ] WATER WASHABLE
[ ] FLUORESCENT [X] VISIBLE

MATERIAL	MANUFACTURER	DESIGNATION	W HEAT CODE NO.
PENETRANT	Turco	Dye check Solvent Rem	FX48
PRE-CLEANER	Turco	" " #3	KL17
REMOVER	Turco	" " #3	KL17
EMULSIFIER	N/A	N/A	N/A
DEVELOPER	Turco	Dye check Non Aq.	MG94

REMARKS:

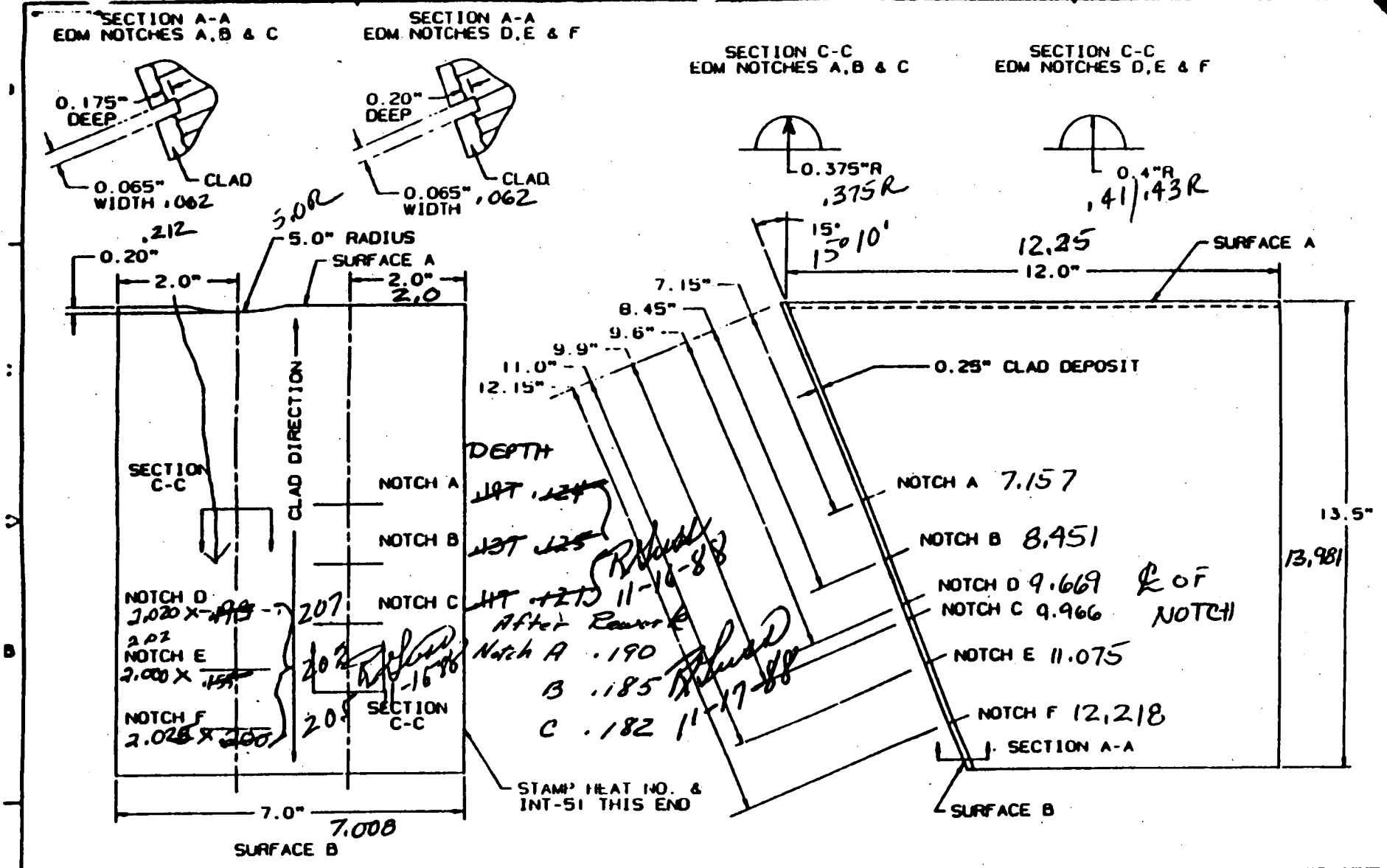

NSID TECHNICAL APPROVAL Phillip C. Bulen	DATE 10-11-88	Westinghouse Electric Corporation NSD-INSPECTION SERVICES
LEVEL III APPROVAL	DATE	TITLE CALIBRATION BLOCK INDIAN POINT UNIT NO. 3 REPLACEMENT STEAM GENERATOR PRIMARY NOZZLE INNER RADIUS
PRODUCT ASSURANCE APPROVAL	DATE 10/14/88	
PRODUCT LINE APPROVAL	DATE 10/18/88	SIZE C · SK. NO. INT-51 SH. 1 OF 2 · REV. 0

Nuclear Services Integration Division

QUALITY RELEASE

QR- 14917 REV. 0

PURCHASE ORDER	PART NAME	DRAWING & REV
MN-23425D	MATERIAL FOR CAL BLOCKS	N/A

PAR NO	CHG NOTICE NO	P.O. ITEM NO	PROJ/S.O. NO	QTY ON ORDER	QTY RELEASED
N/A	N/A	001	IP7I BA454	1 PC	1 PC

SUPPLIER	E SPEC & REV	ORDER
TOOLING SPECIALISTS INC	SA508 CL2	COMPLETE ☑ YES ☐ NO

SERIAL OR IDENTIFICATION NOS

HEAT No 6-5858

The equipment shown hereon is released by W Quality Assurance. Shipment may be made subject to authorization by W Purchasing. In the Audit Checklist below, an A indicates acceptability, a C indicates a contingency and a W indicates that W QA has waived the auditing or witnessing of the attribute. All non-applicable items are lined out.

AUDIT CHECKLIST

- [x] Material Certifications ATTACHED
- [ ] ~~Heat Treat Records~~
- [ ] ~~RT Film and Records~~
- [ ] ~~PT/MT Records~~
- [x] Visual
- [ ] ~~Dimensional~~
- [ ] ~~UT Records~~
- [ ] ~~Personnel Qualification: Welding, NDT~~
- [ ]
- [ ]
- [ ] ~~Non-Operating Electrical Tests~~
- [ ] ~~Operating Electrical Test~~
- [ ] ~~Pressure Test~~
- [ ] ~~Seat Tightness Test~~
- [ ] ~~Performance Test~~
- [x] Cleanliness
- [ ] ~~Packaging~~
- [ ] ~~Code Form~~
- [ ] ~~Painting~~
- [ ]

DEVIATION NOTICES AND REMARKS (ALL DEVIATIONS HAVE BEEN APPROVED BY THE RESPONSIBLE WESTINGHOUSE ENGINEER UNLESS A SPECIFIC EXCEPTION IS STATED)

RELEASED FOR STORAGE AT TSI

NO DNA

THE SUPPLIER CERTIFIES that for the equipment and material released, all contractual requirements have been met. Approved deviations, if any, are listed above.

SUPPLIER SIGNATURE [signature] DATE 4/4/88

TITLE

The equipment shown hereon is released by (W) Quality Assurance. Shipment may be made subject to authorization by (W) Purchasing.

The equipment supplier has certified that the equipment above meets all requirements of the purchase drawings and specifications. Westinghouse has reviewed evidence supporting this release and that as specified above has detected no deviations from such requirements. This release does not waive any rights Westinghouse may have under the purchase order including Westinghouse's right to reject the equipment upon discovery of any such deviations after arrival at destination.

[signature] 4/4/88

Westinghouse Quality Assurance Representative

NSID 1010 11-84

SUPPLIER (ATTACH TO SHIPPING PAPERS)

Royce Aerospace Materials Corp.
7200 New Horizons Blvd., N. Amityville, New York 11701 - USA
Telephone 516-225-1000 Telex 125508 RAM CORP BABN

"ACUTAL TEST REPORTS OF MATERIAL USED BY OUR FORGER TO PRODUCE P.O. #2948 "

FORM NO. 1309

NATIONAL FORGE COMPANY

ERIE PLANT . 1341 W. 16TH STREET ERIE, PA. 16512 . 814-452-2300

MATERIALS DIVISION CERTIFICATION REPORT

CUSTOMER: PURCHASE ORDER NUMBER: 009886

	NFC ORDER #/SERIAL #	SIZE	NOMENCLATURE	SPECIFICATION	WEIGHT
1	49-8386-01-001	36" RCS X R/L	BILLET	Ni-Cr-Mo CHEMISTRY PER ORDER E.F.V.D.	
2					
3					
4					

CHEMICAL ANALYSIS (WT. %)

	HEAT NO.	C/	Mn/	P/	S/	Si/	Ni/	Cr/	Mo/	V/	Al	Cu		
1	6-5858	.19	.74	.011	.005	.22	.84	.32	.65	.03				
2														
3														

MACRO ETCH TEST RESULTS

Location	Class			

MECHANICAL PROPERTIES

Legend	Specimen I.D.	Tensile PSI	Yield PSI@	% Elong	% R/A	Hardness	Grain Size
L=Long							
R=Rad							
X=Trans							
Y=Tang							

Ultrasonic Inspected Per
Magnetic Particle Inspected Per
NO PORTION OF THIS ORDER HAS BEEN SUBLET.

NONE OF THIS MATERIAL HAS BEEN WELD REPAIRED.

Rld. 1-26-87

Authorized Company Representative

January 22, 1987
Date

THE RECORDING OF FALSE, FICTITIOUS OR FRAUDULENT STATEMENTS OR ENTRIES, OR THIS DOCUMENT MAY BE PUNISHED AS A FELONY UNDER FEDERAL STATUTES.

THIS MATERIAL HAS BEEN MANUFACTURED FREE OF MERCURY CONTAMINATION.

Sincerely,
Fran Thomas
Fran Thomas

TOOLING SPECIALISTS, INC.

CERTIFICATION LETTER OF COMPLIANCE

DATE: Arpil 4, 1988

TO: Westinghouse Electric Corporation
Nuclear Energy Systems
P.O. Box 355
Pittsburgh PA 15230

Tooling Specialists, Inc. certifies that all purchase order requirements have been met for the following equipment and material. Any deviations from the order requirements have had Westinghouse NES approval prior to shipment. Deviation Notice (D/N) numbers applicable are _____ (N/A if not applicable).

Westinghouse Purchase Order Number MN 23425-D
P.O. Change Notice number (s) _____
Procurement Advisory Release (PAR) number (s) _____

Quantity	P.O. Item #	DWG. or Sketch and Rev. #	Base Mat'l & Heat #	Weld Joining Mat'l & Heat #	Cladding M and Heat #
1	001		6-5858		

Weld joining procedure used _____ (include revision #)

cladding procedure used _____ (include revision #)

Heat treating procedure used _____ (include revision #)

One copy each of the following documents as required by the purchase order are attached to this letter. All (including letter) are included with this shipment.

X Westinghouse Quality Release
X Base material mill test report (s)
_____ Weld operator certification
_____ Heat treat chart (s)
_____ Inspection Report
_____ Weld joining material mill test report
_____ Cladding material mill test report
X Other Letter of Compliance

One additional copy each of this letter and the above documents are hereby forwarded to the Westinghouse Buyer.

All records supporting this certification letter are available at Tooling Specialists.

Thomas D. Shearer
(signature)

Tooling Specialists, Inc.

9739002 ITEM 02
NYPA IP-3
TSI 3.50

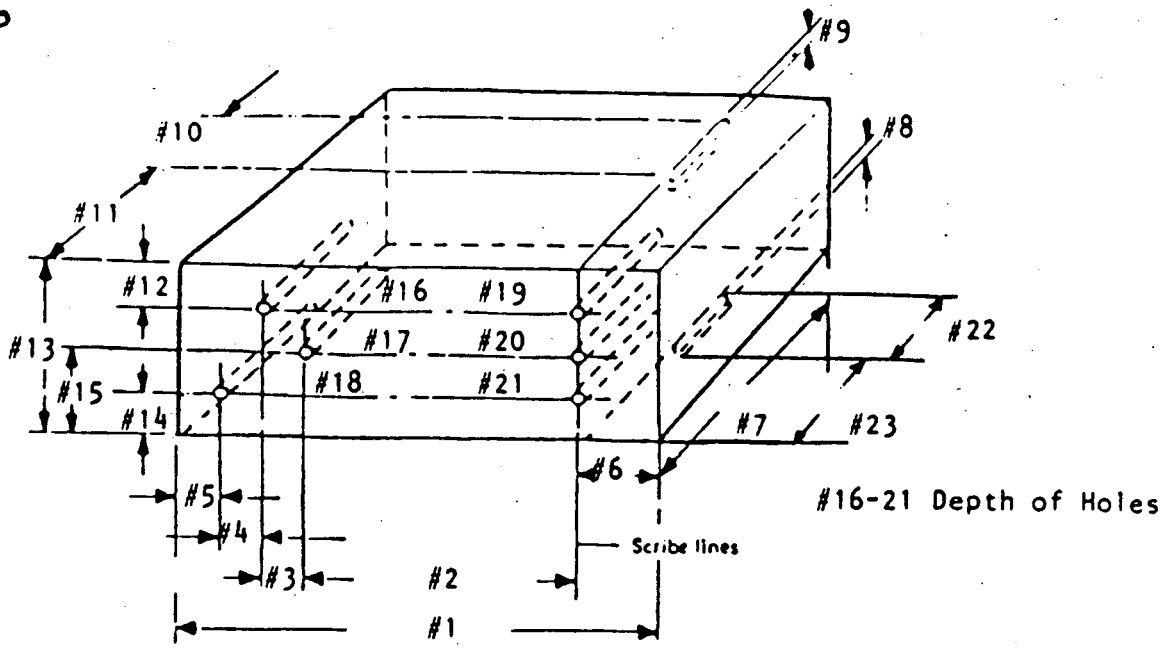

ISI-1 AS-BUILTS

#1	14.00	#9	.075	#17	2.96
#2	9.00	#10	1.97	#18	2.96
#3	.88	#11	3.00	#19	3.03
#4	.87	#12	.84 .84	#20	2.88
#5	1.49	#13	3.45	#21	3.01
#6	1.70	#14	.87 .87	#22	1.97
#7	6.98	#15	1.74 1.75	#23	3.00
#8	.075	#16	2.84		

HOLE DIA
.187 6 PLACES

HEAT CODE NO. FW 84

INSPECTOR R. E. BOLLIER DATE 2-14-87

LEVEL III NDE _____ DATE _____

QUALITY RELEASE
F37452 - REV 1

SH. #1
B. DOCK

QUALITY RELEASE

PENSACOLA PLANT, INTERNAL RELEASE

LOCATION OR DIVISION

QR- 155353

PURCHASE ORDER	PART NAME			
13179	Plate			
PAR NO.	CHG. NOTICE NO.	SUPPLIER	NO. ON ORDER	NO. RELEASED
001008	003	Lukens Steel	16	10
PROJECT AND SHOP ORDER	SPIR NO.	DRAWING & REV.	PROJECT PROCUREMENT	
mm641058 61	Sub NA	NA	COMPLETE ☐ YES ☑ NO	

SERIAL OR IDENTIFICATION NOS.

Ht. # B8027-2 (W) Code FW75-001.
Ht. # D8178-4 (W) Code FW76-002.
Ht. # D8208-5 (W) Code FW77-002.

The equipment shown hereon is released by W Quality Assurance. Shipment may be made subject to authorization by W Purchasing. In the Audit Checklist below, an A indicates acceptability, a C indicates a contingency and a W indicates that WQA has waived the auditing or witnessing of the attribute. All non-applicable items are lined out.

AUDIT CHECKLIST

☑ A Material Certifications	☐ Non-Operating Electrical Tests
~~Heat Treat Records~~	☐ Operating Electrical Test
~~NI Film and Records~~	☐ Pressure Test
~~Fitted Records~~	☐ Seat Tightness Test
☑ A Visual	☑ Performance Test
☑ A Dimensional	☑ A Cleanliness
☑ A UT Records	~~Packaging~~
☑ A Personnel Qualification: Welding, NDT	~~Code Form~~

DEVIATIONS NOTICED AND REMARKS (ALL DEVIATIONS HAVE BEEN APPROVED BY THE RESPONSIBLE WESTINGHOUSE ENGINEER UNLESS A SPECIFIC EXCEPTION IS STATED.)

Ht. # D8208-2 (W) Code FW78-003.
Ht. # D8208-4 (W) Code FW79-004.
Ht. # D8222-3 (W) Code FW80-005.
Ht. # D8204-2 (W) Code FW81-006
Ht. # D8204-1 (W) Code FW82-006.
Ht. # D8167-3 (W) Code FW83-007.
Ht. # D8204-3 (W) Code FW84-008. DATE Rec. 10-29-84

We certify that the equipment and/or material released, all contractual requirements have been met. Approved deviations, if any, are listed above.

SIGNATURE [signature] TITLE Rev. Insp DATE 1030-84

QUALITY ASSURANCE

LUKENS STEEL

Lukens Steel Company
Quality Assurance Laboratory
Coatesville, PA 19320

TEST CERTIFICATE

FW84

PAGE NO. 01 OF 01
FILE NO: 8587-15-15
DATE: 10/04/84
MILL ORDER NO: 43110-08

CUSTOMER P.O.: PE-13179-M-AJ(PT 1/2)
DESCRIPTION: 1 - 3.51 -X- 119-1/4 -X- 529 RECTANGLE

SOLD TO:
WESTINGHOUSE ELEC. CORP.
PENSACOLA PLANT
P.O. BOX 1313

PENSACOLA, FL 32504

SEND TO: 01-C
L U K E N S C O P Y

SHIP TO:
WESTINGHOUSE ELEC. CORP.
PENSACOLA PLANT
SCENIC HIGHWAY, RT. 90

PENSACOLA, FL

Revised Copy 2-21-86

WEST A533C01 REV A YR 84
ASME CODE SECT. II & III SUB NB 1980 EDITION THRU

ASME SA533 GR A CL 2
WINTER 1981 ADDENDA

J. H. Giomanski

MELT/SLAB	C	MN	P	S	CU	SI	NI	CR	MO	V	TI	B					PRACTICES
D6204 /1																	VIP
D1204	.21	1.43	.009	.009		.21			.57								E/F QUALITY

TENSILES

TYPE	YIELD PSI X 100	TENSILE PSI X 100	% ELONG IN 2"	% R.A.
TX	932	1074	20.0	
BX	891	1059	21.0	

CHARPY V IMPACTS FULL

TYPE	TEMP	FT LBS			MILS LATERAL EXPANSION			% SHEAR		
BX	+100	90	96	102	76	78	80	60	60	60

OTHER TESTS PERFORMED

DRP WGHTS - LOC:BL SIZE:P3 DEPTH:SURF
(TEMPS)+50 +50
(RSLTS) NB NB
NDT = +40°F. or below.

INFORMATION

ALL TEMPERATURES APPEAR IN DEGREES FAHRENHEIT.
CERTIFICATE OSC-218 EXPIRES 8/04/87
92884 L10184.,
RTNDT = +40°F. or below.
The requirements of NB2200 & NB2300 have been met.
No welding was performed at Lukens.

This is a revised T.R. Please destroy other T.R. previously sent.
Reason: Added NDT, RTNDT, and statements.

W HEAT CODE NO. FW84

HEAT TREAT CYCLES - MATL. OR TESTS - DEG F.

MATL	TEST	NOM TEMP	MIN TEMP	MAX TEMP	HOLD MINS	COOL METHOD	END TEMP
X	X	1650			0193	WQ	
X	X	1200			0106	WQ	

HEAT TREAT CYCLES - TESTS ONLY - DEG F.

START END TEMP	NOM TEMP	MIN TEMP	MAX TEMP	HOLD MINS	HEAT RATE MAX	COOL RATE MAX
0600	1125			1440	0098	0098

WE HEREBY CERTIFY THE ABOVE INFORMATION IS CORRECT:

G. A. Gomisin
SUPERVISOR TEST REPORTING

Form No. 01A (R1-00)

LUKENS STEEL COMPANY

Q.A. — INSPECTION DEPARTMENT

NON-DESTRUCTIVE TESTING REPORT

CUSTOMER: Westinghouse Electric	MILL ORDER NO.: 8587-43110-8	SPECIFICATION/PROCEDURE: N0014-9-4-78 ADD "H" 4-6-84	DATE: 9-13-84
CUSTOMER NO: Pa PE-13179-H-ASTCOT 1/2	QUALITY: West. A533 Cl-A-84-	NO. PCS.: 1 / GAUGE: 3.510 / WIDTH: 119.250	LENGTH: 529
INSPECTOR'S NAME & LEVEL I SNT-TC-1A): D Beck 5361	WITNESSED BY:	MELT & SLAB: 1-D 8204-3	MARK NO.: N M B-411061 / ITEM NO.: 8

UT ☑ SB ☐ AB ☐	EQUIPMENT USED: NK 1-51 11-6-84	MT ☐	EQUIPMENT USED:	PT ☐	EQUIPMENT USED:
TRANSDUCER: Steel		TYPE OF PRODS.		METHOD	
SIZE & FREQ: 1½ dia 2.25 MHz		SPACING			
COUPLANT: SAW		GRID REF.			
METHOD: Cont		AMPERAGE			
AMPLITUDE: 80%	TYPE OF SURFACE: Cond	METHOD	TPV ☐	TYPE OF SURFACE	
GRID REF.: 100%		TYPE OF SURFACE			

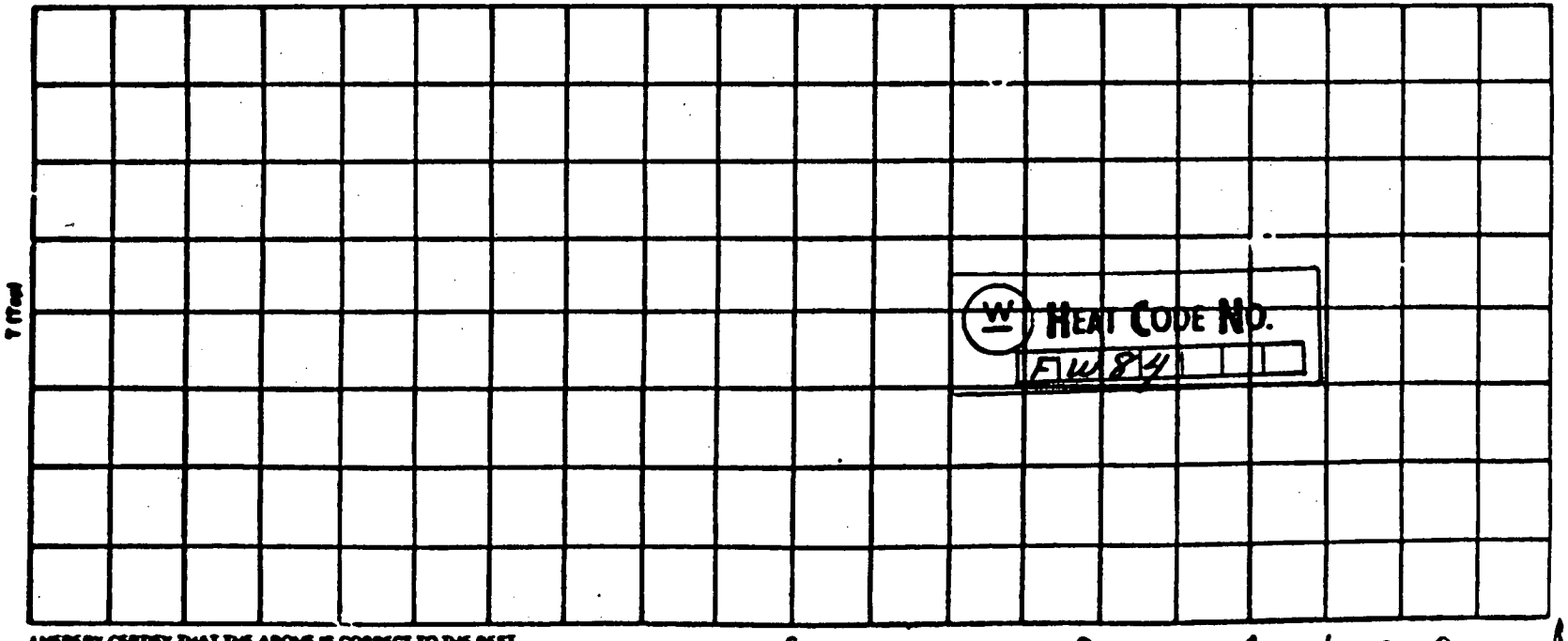

I HEREBY CERTIFY THAT THE ABOVE IS CORRECT TO THE BEST OF MY KNOWLEDGE AND BELIEF

ut ok per spec

C

David L. Hallock

INSPECTOR SUPERVISOR LEVEL II SNT-TC-1A

Exhibit I

RECORDS

NCD PENSACOLA

QUALITY INSPECTION PROCEDURE

Drawing	Item	Description	Operation	QIP
GENERAL	N/A	POST WELD HEAT TREAT (PWHT) DATA SYSTEM FOR STEAM GENERATORS AND PRESSURIZERS	N/A	3146

Shop Order	# Inspected	# Rejected	MRR/MRN No.	Inspector/Stamp/Date	Oper.
MMGL 11497	1	0	NA	R.E. Sollie QA18 2/2/87	020

Return to QA Records ☑ Copy to: ☐ QE ☐ ME ☐ OTHER: _____

POST WELD HEAT TREAT DATA RECORDING FORM

Identity Number NTPA-IP-3 ISI 3.50

9739002 ITEM 02
FW 84 SA533
ISI 3.50
NTPA-IP-3

TC	Heat Code No.	Component	TC	Heat Code No.	Component
#1	FW84	CAL. BLOCK			
#5	FW84	CAL. BLOCK			

PWHT/DMP 5524 Sub 14 Maximum (F°/Hr) Heating Rate 105°F/HR Maximum (F°/Hr) Cooling Rate 105°F/HR

Soaking Temperature 1100°F - 1125°F Hours at Soaking Temperature 2 HRS 56 MIN

Thermocouple Recorder Calibration Date _____ Furnace PWHT ☒ Local PWHT ☐

Start Heating Cycle	@ 800 °F	Date 11-13-86	Time 2020
Soak Started	@ 1100 °F	Date 11-14-86	Time 0010
Soak Ended	@ 1100 °F	Date 11-14-86	Time 0306
End Cooling Cycle	@ 800 °F	Date 11-14-86	Time 0826

Quality Control Inspector R.E. Sollie Date 2-2-87

Actual Soak Time: Hour 2 Minutes 56 MRR No. NA

Reviewed by Authorized Nuclear Inspector _____ Date _____

Quality Assurance Engineer	Date	Manufacturing Engineer	Date
[illegible]	9-26-84	[illegible]	9/26/84

REV	DATE	QE	ME	REV	DATE	QE	ME	REV	DATE	QE	ME	REV	DATE	QE	ME
03	9-26-84	[illegible]	[illegible]												

UT INSPECTION OF CALIBRATION BLOCK MATERIAL
(W) HEAT CODE FW84 - 10' X 10" X 3.5". 2 PIECES
9-2-86

STRAIGHT BEAM

CALIBRATION WAS ON SWCB-7B. REFERENCE REFLECTOR WAS A 1/16" Ø SDH AT 3 3/4" DEPTH. THE SIGNAL FROM THIS HOLE WAS SET TO 80% FSH. (CALIBRATION SHEETS FIGURES 2-0 & 3-0 ATTACHED.) THE 10' X 10" SURFACE OF BOTH PIECES WAS SCANNED 100% AT +6 dB. NO INDICATIONS WERE FOUND.

ANGLE BEAM.

CALIBRATION WAS ON SWCB-3 & SWCB-7B. REFERENCE REFLECTORS WERE 1/16" Ø SDH AT DEPTHS OF 3/4", 1 1/2", 2 1/4", & 3 3/4". THE SIGNAL FROM THE HOLE AT 3/4" WAS SET TO 80% FSH. AN ELECTRONIC DAC WAS USED. SEE ATTACHED CALIBRATION SHEETS FIGURES 2-45 & 3-45 FOR SPECIFICS ON CALIBRATION SETTINGS. THE 10' X 10" SURFACES OF BOTH PIECES WAS SCANNED 100% IN TWO DIRECTIONS, ONCE WITH THE SOUND BEAM DIRECTED ALONG THE 10' LENGTH & THE SECOND TIME WITH THE SOUND BEAM DIRECTED ACROSS THE 10" WIDTH. THE ONLY INDICATIONS OBSERVED WERE THOSE FROM SURFACE IRREGULARITIES FROM THE OPPOSITE SURFACE. THESE FEW INDICATIONS HAD A MAX AMPLITUDE OF 10% FSH.

R.E. BOLLING
U.T. SPECIALIST
9-2-86

NCD PENSACOLA

RECORDS

QIP Continuation Sheet

Drawing	Item	Description	Operation	QIP
GENERAL	N/A	ULTRASONIC EVALUATION REPORT	N/A	851

NOMENCLATURE

SHOP ORDER NA ASSY. SERIAL NA NAME CAL. BLOCK MATERIAL
HEAT CODE FW 84 DRAWING NA ITEM NA
ISSUE NA UT EXAMINER R.E. BOLLIE LEVEL II

WELD SEAM NA ID : : OD : : BASE MATERIAL
10" x 10" x 3.5" PLATE MATERIAL 2 PIECES

UT EVALUATION

IN-PROCESS : ✓ : REPAIR : : FINAL : : OTHER NA

ACCEPT QA18 DATE 9-2-86 (IF ACCEPT, MUST BE STAMPED)

REJECT : : MRR NA NO. REJECTS NONE

REPORTABLE INDICATIONS NONE

INSTRUMENT

EQUIPMENT S/N 3865 FREQUENCY 1.0 : : 2.25 : : 5.0 : : 10.0 : :
OTHER BD

SENSITIVITY 6.04 JACK R : : T : ✓ :

SWEEP RANGE 10 REJECT OFF : ✓ : ON : : :

REP RATE H DAMPING MIN : : MED : : MAX : : OFF
SWEEP DELAY 9.26 SPECIAL EQUIPMENT NA
CALIBRATION DATE 8-27-86 TIME 1300 9-2-86

SEARCH UNITS

	UNIT 1	UNIT 2	UNIT 3	UNIT 4
SEARCH UNIT SN	183195			
SIZE	1.0" ø	NA	NA	NA
FREQUENCY	2.25 MHz			
TYPE	SFS			
ANGLE	0°			

COUPLANT

BATCH NO 2289 WATER : : GLY : : OTHER GEL 3000
MFG ECHO

CAL BLOCK

BLOCK NO.	SWCB-7B	NA	NA	NA
IIW BLK ANGLE	NA			

SURFACE

CONDITION ACCEPT

F37307 - 8515 FIGURE 2-0

REV	DATE	QE	ME	REV	DATE	QE	ME	REV	DATE	QE	ME	REV	DATE	QE	ME
3	7/30/92	DC	[illegible]												

NCD PENSACOLA

RECORDS

QIP Continuation Sheet

Drawing	Item	Description	Operation	QIP
GENERAL	N/A	ULTRASONIC EXAMINATION OF WELDS	N/A	8515

WELD CALIBRATION

CALIBRATION SHEET NO. 1.9.2

INSPECTOR: R.E. Bollier
OPERATOR: NA

S.O. NA
H/C FW 84
DWG NA ITEM NA
NAME PLATE MATERIAL FOR CAL. BLOCK

INSTRUMENT

Make: AEI
Model: S7900
S/N: 3865

SEARCH UNIT

Make: AEI
Type: SFS
Size: 1.0" ø
Freq: 2.25 MHz
Angle: 0°
S/N: 183195

REFERENCES

Cal Block: SWB B-7B
Ref Std: SDH
Size: 1/16" ø
Surface: 125
Other: NA

INSTRUMENT QUALIFICATION

Cal Date: 8-27-86
Qual Date: 9-2-86

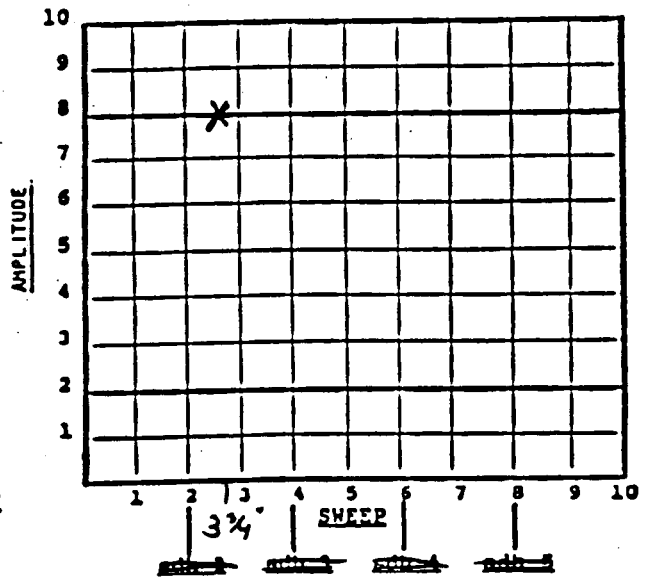

Ident: NA
Thick: 3 ⅝"
Length: 10' x 10'
Type: CARBON

INSTRUMENT SETTINGS

Freq: BB
Range: 10
Mat'l Cal: 6.04

	Course	Medium	Fine
Gain:	0 dB	20 dB	2.0 dB

	Coarse	Fine
(Pulse Pos) Delay:	9	26

Damping: Minimum
Reject: Off
Power: 110 V 60 Hz
Cable: 12 Feet

INITIAL CALIBRATION 1300 hours / DATE: 9-2-86
CALIBRATION CHECK 1330 hours / DATE: 9-2-86

EXAMINER: R.E. Bollier

QIP- 8515, REV. 3

FIGURE 3-0

REV	DATE	OE	ME	REV	DATE	OE	ME	REV	DATE	OE	ME	REV	DATE	OE	ME
3	7/31/91	[illegible]													

NCD PENSACOLA

RECORDS

QIP Continuation Sheet

Drawing	Item	Description	Operation	QIP
GENERAL	N/A	ULTRASONIC EVALUATION REPORT	N/A	851

NOMENCLATURE

SHOP ORDER NA ASSY. SERIAL NA NAME CALIBRATION BLOCK PLATE MATERIAL

HEAT CODE FW 84 DRAWING NA ITEM NA

ISSUE NA UT EXAMINER R.E. BOLLING LEVEL II

WELD SEAM NA ID : : OD : : PLATE MATERIAL 10" x 10" x 3.5" 2 PIECES

UT EVALUATION

IN-PROCESS : ✓ : REPAIR : : FINAL : : OTHER NA

ACCEPT GIVO DATE 9-2-86 (IF ACCEPT, MUST BE STAMPED)

REJECT : : MRR NA NO. REJECTS NONE

REPORTABLE INDICATIONS NONE

INSTRUMENT

EQUIPMENT S/N 3865 FREQUENCY 1.0 : : 2.25 : : 5.0 : : 10.0 : :

OTHER BB

SENSITIVITY 4.56 JACK R : : T : ✓ :

SWEEP RANGE 10 REJECT OFF : ✓ : ON : : :

REP RATE H DAMPING MIN : : MED : : MAX : : OFF

SWEEP DELAY 9.10 SPECIAL EQUIPMENT NA

CALIBRATION DATE 8-27-86 TIME 1400 - 9-2-86

SEARCH UNITS

	UNIT 1	UNIT 2	UNIT 3	UNIT 4
SEARCH UNIT SN	G82154	NA	NA	NA
SIZE	½" x 1"			
FREQUENCY	2.25 MHz			
TYPE	SRJ			
ANGLE	45°			

COUPLANT

BATCH NO 2289 WATER : : GLY : : OTHER GEL 3000

MFG ECHO

CAL BLOCK

BLOCK NO.	SWEB.3 SWEB.7B	NA	NA	NA
IIW BLK ANGLE	NA			

SURFACE

CONDITION ACCEPT

F37307 - 8515

FIGURE 2-45

REV	DATE	QE	ME	REV	DATE	QE	ME	REV	DATE	QE	ME	REV	DATE	QE
3	7/30/92	DC	[illegible]											

NCD PENSACOLA

RECORDS

QIP Continuation Sheet

Drawing	Item	Description	Operation	QIP
GENERAL	N/A	ULTRASONIC EXAMINATION OF WELDS	N/A	8515

WELD CALIBRATION

CALIBRATION SHEET NO. 2-9-2

INSPECTOR: R.E. BOLLING
OPERATOR: NA

S.O. NA
H/C FW 84
DWG NA ITEM NA
NAME CALIBRATION BLOCK PLATE MATERIAL

INSTRUMENT

Make: ADI
Model: SM900
S/N: 3865

SEARCH UNIT

Make: ADI
Type: SRT
Size: 1/2" x 1"
Freq: 2.25 MHz
Angle: 45°
S/N: 682154

REFERENCES

Cal Block: SWCB-3 SWCB-7B
Ref Std: SDH
Size: 1/16" Ø
Surface: 125
Other: NA

INSTRUMENT QUALIFICATION

Cal Date: 8-27-86
Qual Date: 9-2-86

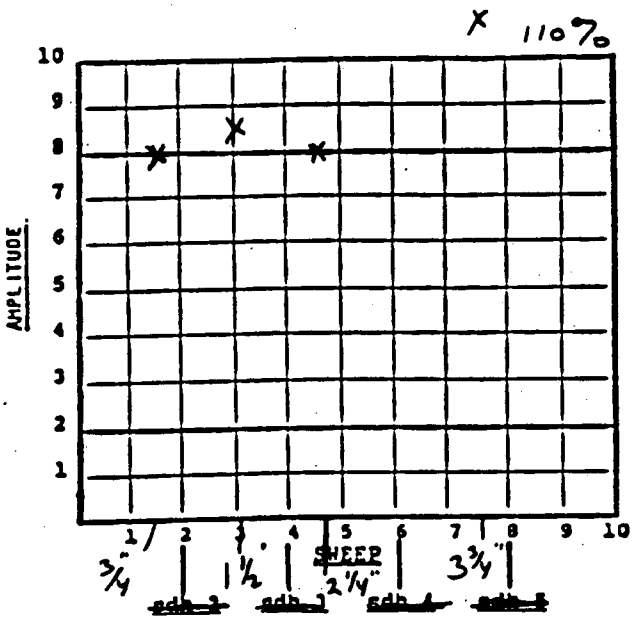

PLATE MATERIAL
Ident: PLATE MATERIAL
Thick: 3.5"
Length: 10' x 10"
Type: CARBON

INSTRUMENT SETTINGS

Freq: BB
Range: 10
Mat'l Cal: 456

	Course	Medium	Fine
Gain:	40 dB	8 dB	2 dB

	Coarse	Fine
(Pulse Pos) Delay:	9	10

Damping: Minimum
Reject: Off
Power: 110 V 60 Hz
Cable: 12 Feet

INITIAL CALIBRATION 1400 hours / DATE: 9-2-86
CALIBRATION CHECK 1500 hours / DATE: 9-2-86

DAC START - 5.39
DAC SLOPE - 8.92

EXAMINER: R.E. BOLLING

QIP- 8515, REV. 3

FIGURE 3-45

REV	DATE	QE	ME	REV	DATE	QE	ME	REV	DATE	QE	ME	REV	DATE	QE	ME
3	3/5/87	[illegible]													

IHI WORK NO. : 5501-480

WORK NAME : NYPA SG. CHANNEL HEAD

PART NAME : UT CALIBRATION BLOCK

TITLE : MILL CERTIFICATES FOR

UT CALIBRATION BLOCK

CLASS'N :
TOMER : ISHIKAWAJIMA HARIMA HEAVY INDUSTRIES CO., LTD. YOK
OHAMA
'ICLE :

. NO :
NO :

NO :

SURVEYOR TO

We certify that the statements made in this certificate are correct, and this material conforms to the applicable code and the customer's purchase order requirements
Date MAR. 31.1987
Signed Kobe Steel, Ltd. By
Manager, Quality Assurance

MATERIAL TEST REPORT

DATE TESTED : MAR.-13-87
DATE STAMPED : 0 - -

MATERIAL				TENSION TEST AREA: .196 INCH² UNIT: KSI TEMP: ROOM						BEND TEST		HARD TEST	CHARPY IMPACT TEST				REMARKS	
- NAME OF PART - DING TEST PIECE (T=175M				SIZE : INCH DIA 500	G.L 20		YIELD STRENGTH 0.20 % OFF-SET	TENSILE STRENGTH	ELON-GATION (%)	RED.OF AREA (%)	SIZE MM DIA × ANGLE		TYPE	UNIT : FT-LB TEMP : + 40F	PC(S) : 03 NOTCH : V2				
ND OF MATERIAL - ED STEEL R'S SPEC. 08 CL3 (F'86)														INDIVIDUAL VALUE			MEAN V.		
TEST MARK (HEAT NO & PIECE NO)	TEST PIECE NO	LOCATION	ORIENTATION	SPECIFIED	MIN	L	50	80	18	38				250			300		
					MAX	L		105											
					MIN														
					MAX														
					MIN														
					MAX														
TS9114-11		R	L	500	20		67	87	21	71				1148	1107	1024	1093	GOOD	010

RESULTS | TEST NO

:MICAL COMPOSITION (%)

NOTE :
AA=

ELEM.	C	SI	MN	P	S	NI	CR	MO	V
MIN		15	120			40		45	
MAX	250	40	150	025	025	100	25	60	050
14	200	25	135	005	003	71	07	54	002
				Check Analysis					
	19	25	1 36	006	005	70	08	53	002

T TREATMENT : 1652F 8HR WQ & 1220F 16HR AC
GING RATIO :
TING PROCESS : ELECTRIC FURNACE
EIGHT (KGS) : 805.0 AS FORGED
TING MACHINE : T67-T-268

.13218

PHYSICAL - LABO

NOTE :

KSL. MFG. NO : 86-32550-0
SHEET NO : 7-3L012-01-1
REF. O-NO : - -

Q: TXT/4

TO
1SF
KSL

S501-480 299 U001 UT BLOCK

DOCU. NO
SPEC-NO : T01 -A

KOBE STEEL, LTD. TAKASAGO PLANT

ISHIKAWAJIMA HARIMA HEAVY INDUSTRIES CO.,LTD.

Submitted to: YOKOHAMA
提出先

Test Report No. IN 1110

Date of Issue: May 11, 1987

CERTIFICATE OF WELDING MATERIALS

溶接材料証明書

1. TRADE NAME : 銘柄
   Strip Electrode —— USB-309L
   Flux —— PFB-7FK

2. SIZE : サイズ
   Strip Electrode —— 0.4mmt x 75mmw
   Flux —— 12 x 65 mesh

3. MANUFACTURING No. : 製造番号
   Strip Electrode —— 6S0858
   Flux —— 77759D1

4. MANUFACTURING DATE : 製造年月日
   Strip Electrode —— Sep. 09, 1986
   Flux —— Apr. 16,1987

5. PURCHASER'S SPECIFICATION No. : 購入仕様書No.
   026H001 Rev. 0
   QAG-SP-124 Rev. 0

6. MANUFACTURER'S SPECIFICATION No. : 納入仕様書No.
   N1754 Rev. 0

7. APPLICABLE CODE : 適用コード
   Adaptable Code: ASME Sec.III Div.1 NCA-3800,NB-2400 (1983 Edition through 1984 Summer Addenda)
   Reference Code: ASME Sec.II partC SFA-5.9 (1983 Edition through 1984 Summer Addenda)

8. ASME QSC No. (MS) & EXPIRATION DATE : 有効期限
   No. QSC - 362 (M.S)
   Expiration Date —— Jan. 05,1988

KOBE STEEL, LTD.
WELDING DIVISION, IBARAKI PLANT
株式会社 神戸製鋼所
溶接棒事業部 茨木工場

WE HEREBY CERTIFY THAT THE CONTENTS OF THIS REPORT ARE CORRECT AND ACCURATE, AND ALL OPERATIONS PERFORMED BY US ARE IN COMPLIANCE WITH THE REQUIREMENTS OF OUR IDENTIFICATION AND VERIFICATION PROGRAM.

本報告書の内容は、正確であり、弊工場の実施した業務は、弊工場の識別・立証プログラムに合致していることを、証明いたします。

CERTIFIED BY 証明 May 11, 1987

REVIEWED BY
12/23/87

REVIEWED BY 5/21/87 QC

E. Kobayashi

PURCHASER ISHIKAWAJIMA HARIMA HEAVY INDUSTRIES CO.,LTD. YOKOHAMA
(客先名) 石川島播磨重工業 株式会社 横浜第1工場 殿

Test Report No: IN 1110
Date of Issue : May 08,1987

CERTIFIED MATERIAL TEST REPORT

(試験成績証明書)

TRADE NAME : Strip Electrode USB-309L
(銘柄) 帯状電極
Flux PFB-7FK
フラックス

PURCHASER'S SPECIFICATION : 026H001 REV.0.
(客先仕様書) QAG-SP-124 REV.0

MANUFACTURER'S SPECIFICATION No : N1754, Rev. 00
(納入仕様書)

DATE OF WELDING : Apr.28,1987
(溶接年月日)

DATE OF MECHANICAL TEST : May 08,1987
(機械試験年月日)

ADAPTABLE CODE ASME Sec.III DIV.1 NCA-3800, NB-2400 (1983 Edition through 1984 Summer Addenda)
REFERENCE CODE ASME Sec.II PartC SFA-5.9 (1983 Edition through 1984 Summer Addenda)

KOBE STEEL, LTD.
WELDING DIV. Fujisawa Plant

hereby certify that the contents of report are correct and accurate and operations performed by us or our ontractors are in compliance with equirements of the applicable Specification specified by the Purchaser.

IFIED BY May. 8, 1987

QUALITY SYSTEM PROGRAM NO. : NF002J REV.2
(品質保証マニュアル番号)

DATE OF REVISION OCTOBER.01,1980
(改訂年月日)

equired Tests and Applied Code (試験項目および適用規格)

	Required Test	(試験項目)	Code (規格)
1	Delta Ferrite Measurement	デルタフェライト測定	FERRITE SCOPE
2	Chemical Analysis of Weld	溶接金属の化学分析	JIS G 0321 (METHOD)
3	Chemical Analysis of Hoop	フープの化学分析	JIS G 0321 (METHOD)
4			
5			
6			
7			
8			

terial for Test (供試材料)

1 Welding Material (溶接材料)

2.1.1 Name of Manufacturer ~~or Supplier~~ (製造者 ~~又は供給者~~の名称)

Fujisawa Plant
藤沢工場

2.1.2 Identification of Material (溶接材料の識別)

ame (名称)	Code Classification (規格分類)	Reference Spec. 参考	Size (寸法)	Mfg.Date (製造年月日)	Mfg.No (製造番号)	Heat No of Core Wire (芯線の銘番)	Combination No of Covering (配合NO)
309L	ASME Sec.II PartC	(1984S)	04X75 tXw	Sep.09,1980	6S0858	---	---
7FK	SFA-5.9 --------		12X65 Mesh	Apr.16,1987	7775901	---	---
	ASME Sec.III	(1984S) NB-2400, NCA-3800					

Test Plate (試験板)

TK.No IN 1110
Page No 3/7

Classification (規格分類)	Size (寸法) mm			Groove (開先形状)				Required Test No (試験項目NO)
	Thickness (板厚)	Width (幅)	Length (長さ)	Type (型)	Angle (角度)	Root Gap (ルートギャップ)	Buttering (バタリング)	
M A36	50	400	500	-	-	-	—	1.2

Groove Preparation(開先形状寸法)

Welding Condition (溶接条件)

	Polarity (極性)	Welding Current (溶接電流A)	Arc Voltage (アーク電圧V)	Travel Speed (溶接速度) cm/min	Heat Input (入熱量) kJ/cm	Welding Position (溶接姿勢)	Preheat Temp. °F (°C) (予熱温度)	Interpass Temp. °F (°C) (層間温度)	Required Test No (試験項目No)
—	DCEP	1200	25	14	—	Flat	250~399 (121~204)	250~399 (121~204)	1.2

Welding Gas Composition and Flow Rate (シールドガス組成と流量)

- - ℓ/min

ostweld Heat Treatment(溶接後熱処理)

	PWHT Temp. (熱処理温度) °F(°C)	Time at Temp. (熱処理時間) h	Heating Rate (加熱速度) 下/h(℃/h)	Cooling Rate (冷却速度) 下/h(℃/h)max
)	1,126(608)	24.7	92(51)	38(21)

NOT REQUIRED
要求なし

*1 HT	Indication of Defect (欠陥の発生状況)	Judgement (判定)
ec. 格)	———	

~~*1 Reference Par.4 (第4項参照)~~

Result of Chemical Analysis (化学分析結果) %

TK.No IN 1110
Page No 5/7

Welding Material(溶接材料) Hoop (フープ

	C	Si	Mn	P	S	Ni	Cr	Co											
—	0.01	0.22	1.62	0.018	0.002	11.5	22.1	0.057											
Spec. (規格)	≦ 0.03	≦ 0.60	1.00 ~ 2.50	≦ 0.030	≦ 0.030	10.5 ~ 12.5	20.5 ~ 23.5	≦ 0.20											

Weld Metal (溶接金属)

	C	Si	Mn	P	S	Ni	Cr	Mo	Cu	Co	V	Ti	Nb+Ta	N					
—	0.03	0.4	1.66	0.018	0.005	10.4	19.4	0.040	0.05	0.052	0.054	0.002	0.01	0.023					
Spec. (規格)	≦ 0.08	≦ 1.0	≦ 3.00	≦ 0.040	≦ 0.030	8.0 ~ 12.0	18.0 ~ 24.0	≦ 0.50	≦ 0.50	≦ 0.20	*	*	≦ 0.10	≦ 0.040					

* For Reference

Sampling After PWHT

g 3rd pass of 1st overlay layer
(取位置) 肉盛金属1層3パス目

Result of Delta Ferrite Measurement (デルタフェライト測定結果)

	Location of Measurement (測定位置)	Method of Measurement (測定方法)	Delta Ferrite Content (デルタフェライト含有量) FN
PWHT As Welded	First Layer of Weld Pad (1層目肉盛金属表面)	FERRITE SCOPE FN (FERRITE SCOPE)	6.1 6.0 5.9 6.0 (6.0) av
	First Layer of Weld Pad (1層目肉盛金属表面)	FERRITE SCOPE FN (FERRITE SCOPE)	8.3 8.1 8.1 8.9 (8.1) av
PWHT As Welded	First Layer of Weld Pad (1層目肉盛金属表面)	FERRITE SCOPE FN (FERRITE SCOPE)	5～15
	First Layer of Weld Pad (1層目肉盛金属表面)	FERRITE SCOPE FN (FERRITE SCOPE)	8～13
Spec. (規格)			

NOT REQUIRED
要求なし

	Hydrogen Content (水素量)	Average Value (平均)
Spec. (規格)		

(1/4)

TR.No IN 1110

Page No. 7/7

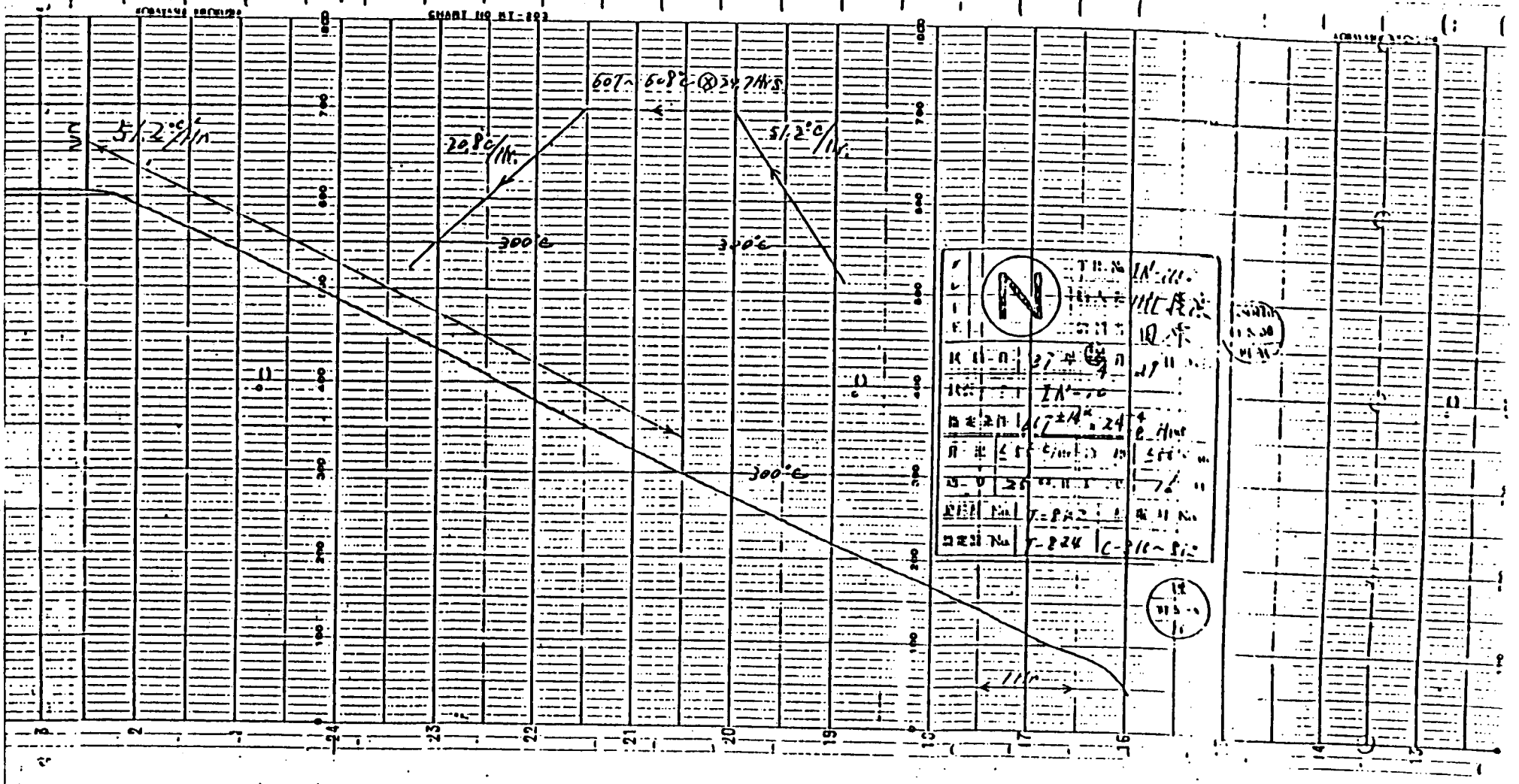

C 3/4

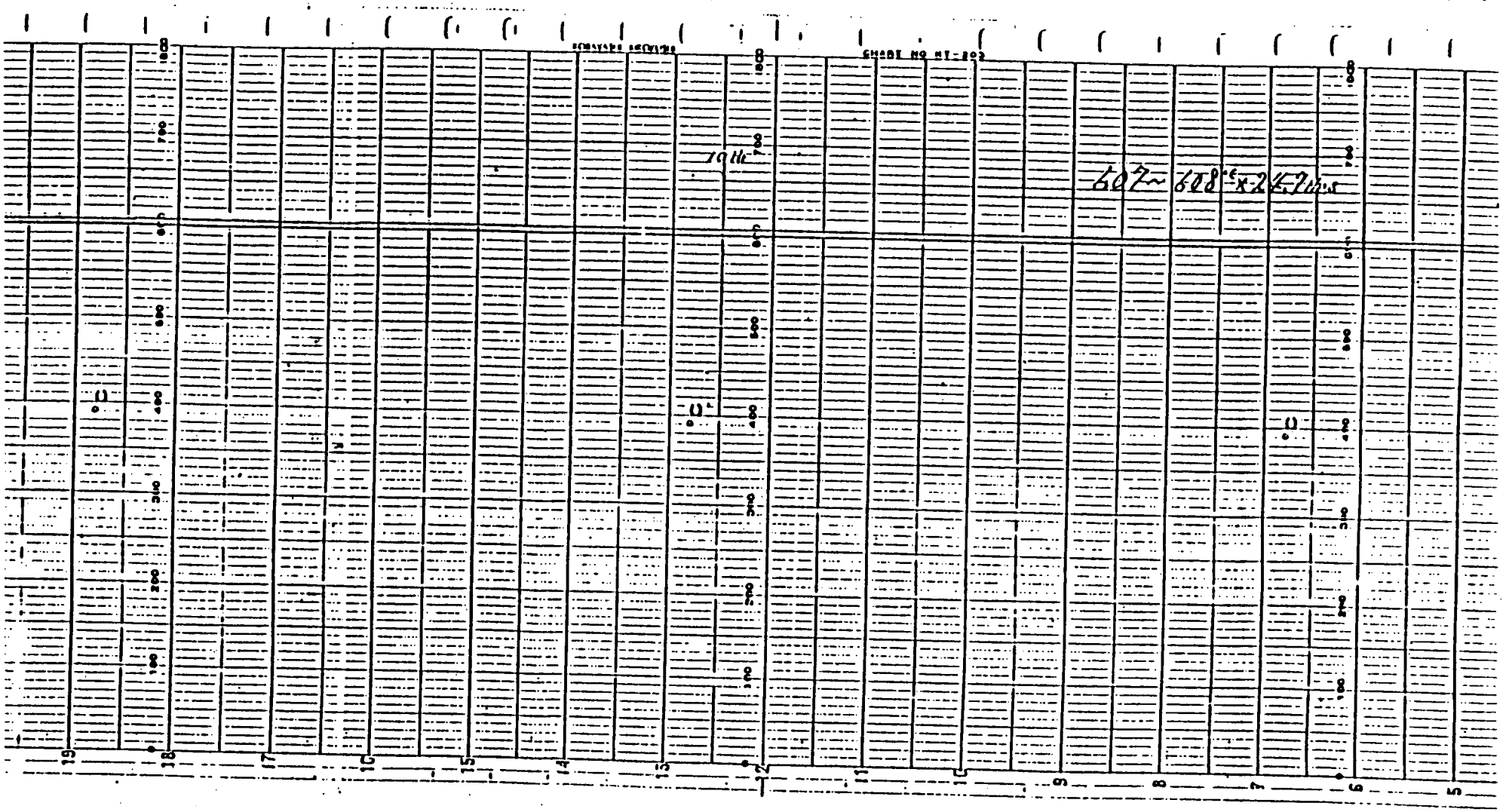

(3/4)

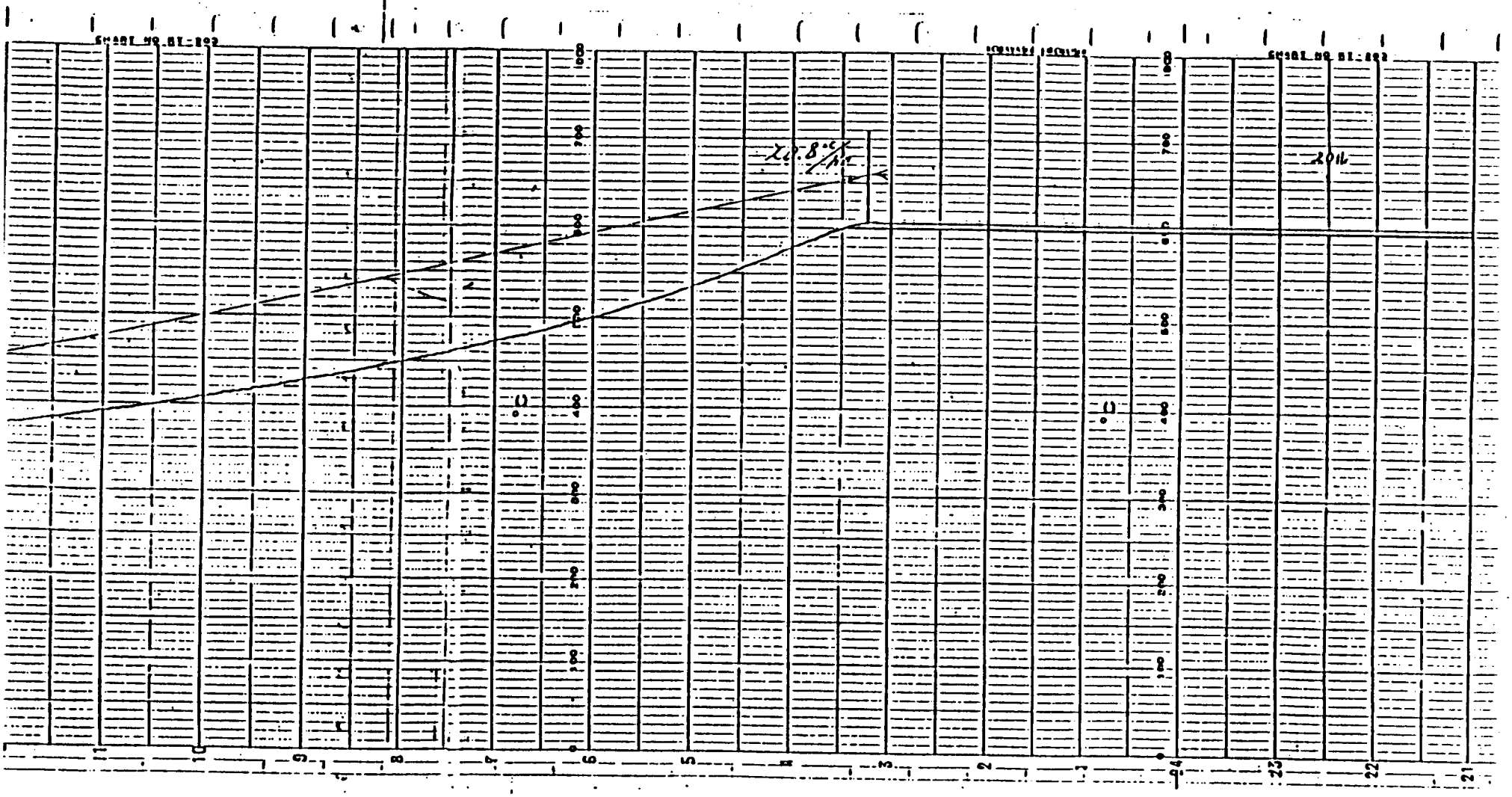

(4/4)

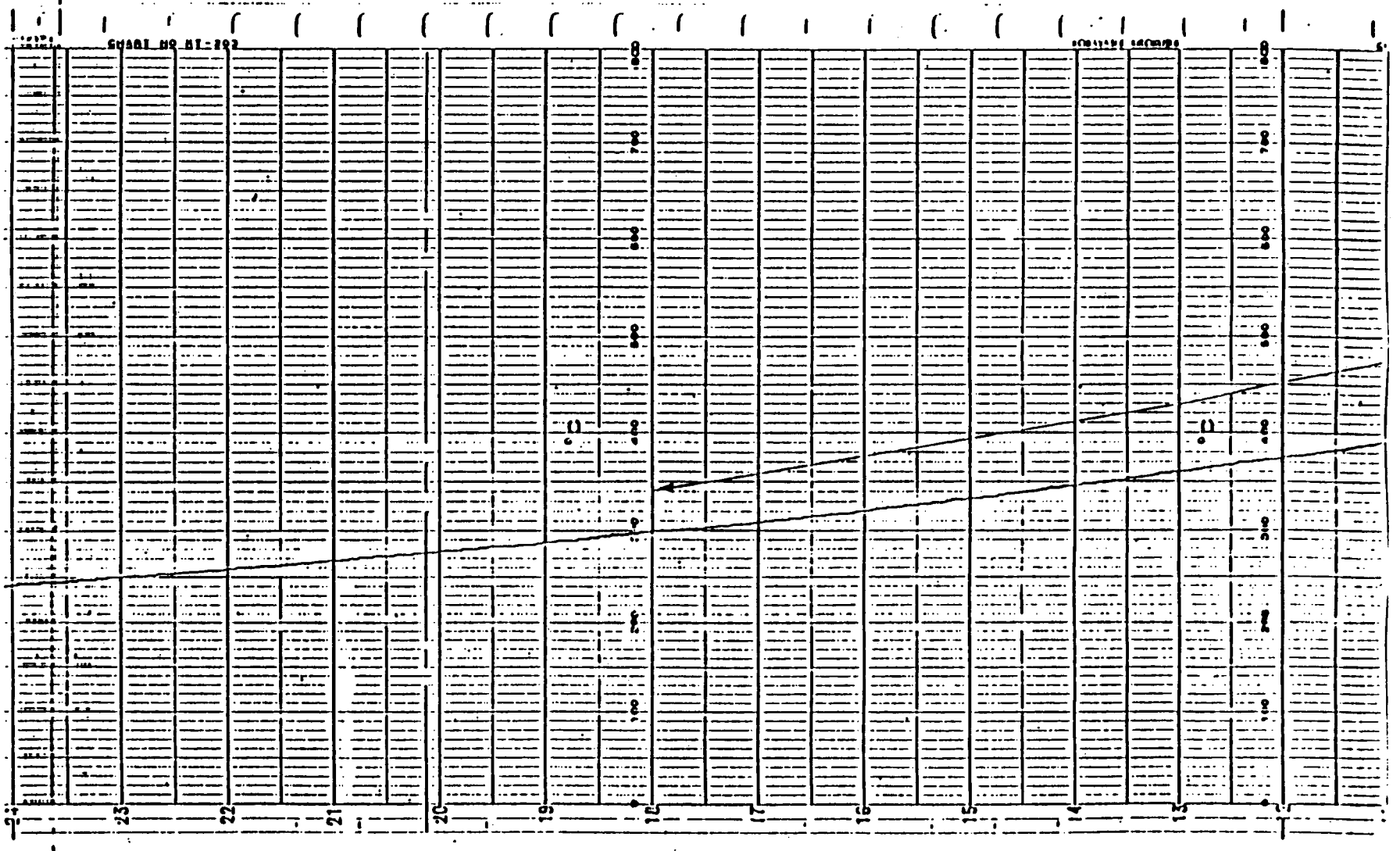
CHART NO RT-202
24
23
22
21
20
19
18
17
16
15
14
13
0
100
200
300
400
500
600
700
800

PT

検査記録番号 RECORD NO.	頁 PAGE
PTP- 480 - 01 (1/1)	

液体浸透探傷検査記録
LIQUID PENETRANT EXAMINATION RECORD

検査対象 SUBJECT: ☑ BEFORE ☐ AFTER PWHT

注文主 CUSTOMER: WESTINGHOUSE ELECTRIC CORPORATION	ブロック名称/系統名 BLOCK/LINE NAME: UT BLOCK
契約番号 CUSTOMER'S REF.NO.: IMS004380 / PE62323MSA	部材/継手/スプール番号 PART/JOINT/SPOOL NO.: CLAD
工作番号 MANUFACTURER'S ORDER NO.: 5501 - 480	方案/図面番号 SPEC/DWG NO.: 026R005 REV.0
工事名称 PROJECT/WORK NAME: INDIAN POINT #3 S.G. CHANNEL HEAD	検査場所 LOCATION: IHI YOKOHAMA NO.1 WORKS
材質 MATERIAL: SA508-3 + CLAD	探傷部温度 TEMP.: 25 ℃
検査方法 EXAMINATION METHOD: ☑ 溶剤去性 SOLVENT-REMOVABLE ☐ 水洗性 WATER-WASHABLE ☐	表面状態 SURFACE CONDITION: ☐ 溶接のまま AS-WELDED ☑ 研削仕上 GROUND ☐ 機械仕上 MACHINED ☐

商品名 TRADE NAME	銘柄 TYPE	ロット番号 LOT NO. 1ST	2ND	3RD	4TH	適用時間 APPLIED TIME
浸透 PENETRANT IKS-PAU	IKS-CHECK	U700290	/	/	/	15 MIN
洗浄 REMOVER IKS-RAU	IKS-CHECK	U700271	/	/	/	- MIN
現像 DEVELOPER IKS-DAU	IKS-CHECK	U700258	/	/	/	15 MIN

検査詳細 EXAMINATION DETAILS

検査年月日 DATE EXAMINED: Jul. 9 '87

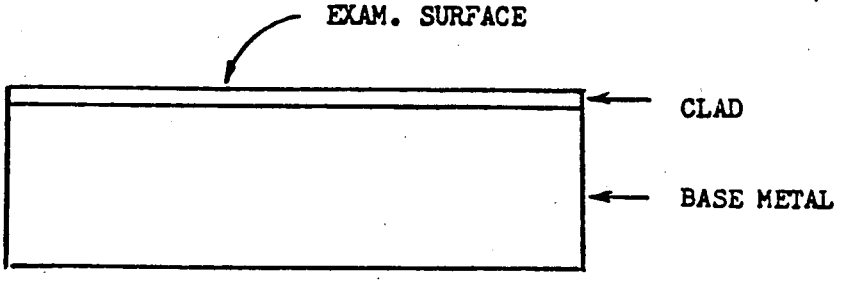

結果 RESULT	日付 DATE	課長 APPROVED BY	日付 DATE
☑ 合格 ACCEPTABLE	客先/CUSTOMER'S REPRESENTATIVE	担当 CHECKED BY	7/9/87 日付 DATE レベル(L)-II
☐ 不合格	日付 DATE	担当 EXAMINED BY I-410 K.FUNATO Jul.9 '87	日付 DATE レベル(L)-II

PT

検査記録番号 RECORD NO.	頁 PAGE
PTP- 480 - 02 (1/1)	

液体浸透探傷検査記録
LIQUID PENETRANT EXAMINATION RECORD

検査時期 SUBJECT: ☐ BEFORE ☑ AFTER PWHT

顧客 CUSTOMER: WESTINGHOUSE ELECTRIC CORPORATION	ブロック名称/系統名 BLOCK/LINE NAME: UT BLOCK
契約番号 CUSTOMER'S REF.NO.: IMS004380 / PE62323MSA	部材/継手/スプール番号 PART/JOINT/SPOOL NO.: CLAD
工事番号 MANUFACTURER'S ORDER NO.: 5501 - 480	方案/図面番号 SPEC/DWG NO.: 026R005 REV.0
工事名称 PROJECT/WORK NAME: INDIAN POINT #3 S.G. CHANNEL HEAD	検査場所 LOCATION: IHI YOKOHAMA NO.1 WORKS
材質 MATERIAL: SA508-3 + CLAD	探傷部温度 TEMP.: 23 ℃
検査方法 EXAMINATION METHOD: ☑ 溶剤除去性 SOLVENT-REMOVABLE ☐ 水洗性 WATER-WASHABLE ☐	表面状態 SURFACE CONDITION: ☐ 溶接のまま AS-WELDED ☑ 研削仕上 GROUND ☐ 機械仕上 MACHINED ☐

商品名 TRADE NAME	銘柄 TYPE	ロット番号 LOT NO. 1ST	2ND	3RD	4TH	適用時間 APPLIED TIME
浸透 PENETRANT IKS-PAU	IKS-CHECK	U700290	/	/	/	15 MI
洗浄 REMOVER IKS-RAU	IKS-CHECK	U700271	/	/	/	- MI
現像 DEVELOPER IKS-DAU	IKS-CHECK	U700258	/	/	/	15 MI

検査詳細 EXAMINATION DETAILS

検査年月日 DATE EXAMINED: Aug. 21 '87

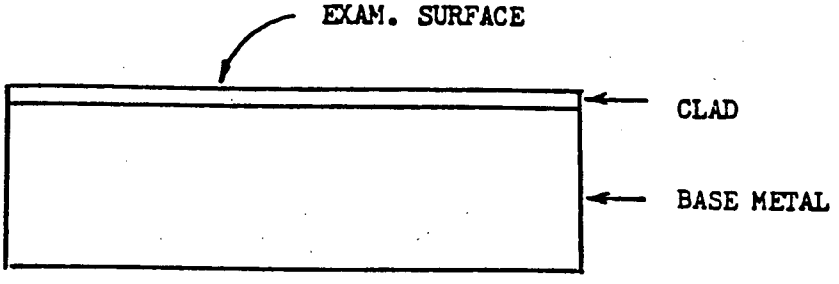

結果 RESULT			
☑ 合格 ACCEPTABLE	客先/CUSTOMER'S REPRESENTATIVE	課長 APPROVED BY for 8/21/87	月/日 DATE
		担当 CHECKED BY 8/21/87	月/日 DATE レベル(L)-2
☐ 不合格		担当 EXAMINED BY I-410 Aug 21 '87	月/日 DATE

UT

検査記録番号 RECORD NO.	頁 PAGE
UTP- 480 - 01 (1/3)	

超音波探傷検査記録
ULTRASONIC EXAMINATION RECORD

検査項目 SUBJECT	☑ BEFORE ☐ AFTER PWHT
注文主 CUSTOMER: WESTINGHOUSE ELECTRIC CORPORATION	ブロック名称/系統名 BLOCK/LINE NAME: UT BLOCK
契約番号 CUSTOMER'S REF. NO.: IMS004380 / PE62323MSA	部材/継手/スプール番号 PART/JOINT/SPOOL NO.: ☑ BASE METAL ☐ CLAD
工事番号 MANUFACTURER'S ORDER NO.: 5501 - 480	方案/図面番号 SPEC./DWG NO.: ☑ 026R008 REV.1 ☐ 026R009 REV.1
工事名称 PROJECT/WORK NAME: INDIAN POINT #3 S.G. CHANNEL HEAD	検査場所 LOCATION: IHI YOKOHAMA NO.1 WORKS
材質 MATERIAL: SA508-3 + CLAD	板厚 THICKNESS: 175 mm
探傷方法 SEARCHING METHOD: PULSE REFLECTION ☑ L 0° ☐ S 45° ☐ S 60° ☐ L DUAL ☐	表面状態 SURFACE CONDITION: ☐ 溶接のまま AS-WELDED ☑ 研削仕上 GROUND ☐ 機械仕上 MACHINED ☐
使用機器/識別番号 INSTRUMENT/IDENTIF. NO.: ☑ USK 7 / 2270 ☐	周波数 FREQUENCY: ☑ 2 MHz ☐ 4 MHz
対比試験片 REF.BLOCK/STANDARD TEST BLOCK: ☑ ASME TYPE 7" ☐	感度 SENSITIVITY: 1/2 T = 80 %
使用探触子/識別番号 SEARCHING UNIT/IDENTIF. NO.: ☑ L 0° ☑ B2S-N; S 45° ☐ WB45-N2 ☐ MWB45-N2; S 60° ☐ ☐; L DUAL ☐ SEB-4E ☐ MSEB-4E	パルス巾 PULSE LENGTH: —
	ゲイン GAIN: 36 dB + 6 dB SCAN.
	リジェクトコントロール REJECT CONTROL: OFF
	接触媒体 COUPLANT: ☐ 機械油 MACHINE-OIL ☐ 水 WATER ☐ HV-15 ☑ SONICOAT BSLG

検査詳細 EXAMINATION DETAILS

検査年月日 DATE EXAMINED: Jul. 9 '87

☐ ANGLE BEAM ☑ STRAIGHT BEAM

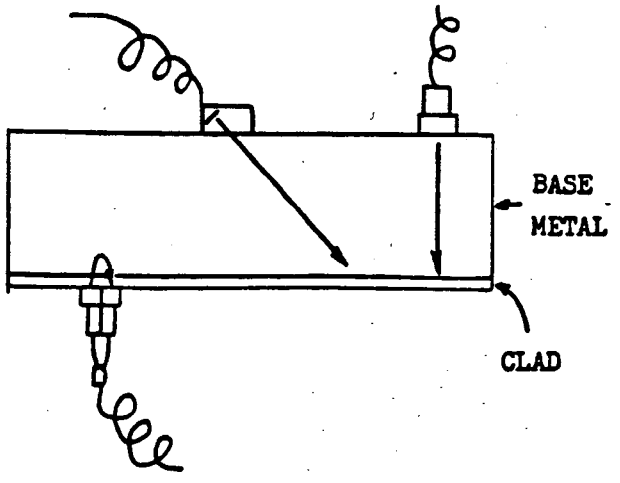

☐ DUAL SEARCH UNIT

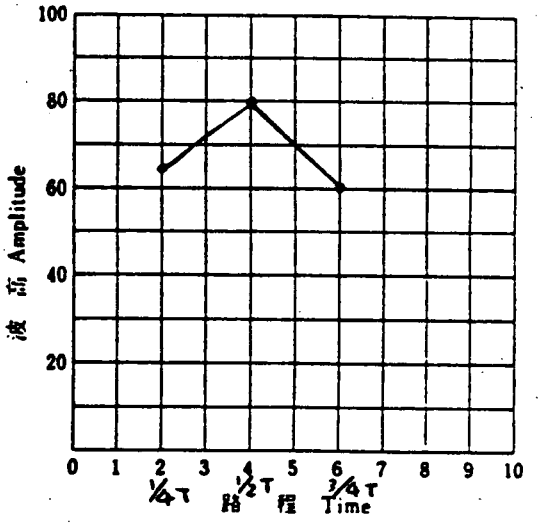

路程全幅 Full Scale — mm

結果 RESULT: ☑ 合格(AC) ☑ 無欠陥 NO INDICATION ☐ 有欠陥 RECORDABLE IND. ☐ 不合格(NA)	月/日 DATE	課長 APPROVED BY	月/日 DATE 7/9/87
	客先/CUSTOMER'S REPRESENTATIVE	担当 CHECKED BY	月/日 DATE 7/9/87 レベル(L) II
	月/日 DATE	担当 EXAMINED BY I-410 K.FUNATO	月/日 DATE Jul. 9 '87 レベル(L) II
		品質管理部検査 課	

UT

検査記録番号 RECORD NO.	頁 PAGE
UTP- 480 - 01 (2/3)	

超音波探傷検査記録
ULTRASONIC EXAMINATION RECORD

検査項目 SUBJECT: ☑ BEFORE ☐ AFTER PWHT

注文主 CUSTOMER: WESTINGHOUSE ELECTRIC CORPORATION	ブロック名称/系統名 BLOCK/LINE NAME: UT BLOCK
契約番号 CUSTOMER'S REF. NO.: IMS004380 / PE62323MSA	部材/継手/スプール番号 PART/JOINT/SPOOL NO.: ☑ BASE METAL ☐ CLAD
工事番号 MANUFACTURER'S ORDER NO.: 5501 - 480	方案/図面番号 SPEC./DWG NO.: ☑ 026R008 REV.1 ☐ 026R009 REV.1
工事名称 PROJECT/WORK NAME: INDIAN POINT #3 S.G. CHANNEL HEAD	検査場所 LOCATION: IHI YOKOHAMA NO.1 WORKS
材質 MATERIAL: SA508-3 + CLAD	板厚 THICKNESS: 175 mm
探傷方法 SEARCHING METHOD: PULSE REFLECTION — L 0° / ☑ S 45° / S 60° / L DUAL	表面状態 SURFACE CONDITION: ☐ 溶接のまま AS-WELDED ☑ 研削仕上 GROUND ☐ 機械仕上 MACHINED ☐
使用機器/識別番号 INSTRUMENT/IDENTIF. NO.: ☑ USK 7 / 2270 ☐	周波数 FREQUENCY: ☑ 2 MHz ☐ 4 MHz
対比試験片 REF.BLOCK/STANDARD TEST BLOCK: ☑ ASME TYPE 7" ☐	感度 SENSITIVITY: 1/4 T = 80 %
使用探触子/識別番号 SEARCHING UNIT/IDENTIF. NO.: L 0° ☐ B2S-N; ☑ S 45° ☑ WB45-N2 ☐ MWB45-N2; S 60° ☐ ☐; L DUAL ☐ SEB-4E ☐ MSEB-4E	パルス巾 PULSE LENGTH: —
	ゲイン GAIN: 32 dB + 6 dB SCAN.
	リジェクトコントロール REJECT CONTROL: OFF
	接触媒体 COUPLANT: ☐ 機械油 MACHINE-OIL ☐ 水 WATER ☐ HV-15 ☑ SONICOAT BSLG

検査詳細 EXAMINATION DETAILS

検査年月日 DATE EXAMINED: Jul. 9 '87

☑ ANGLE BEAM ☐ STRAIGHT BEAM

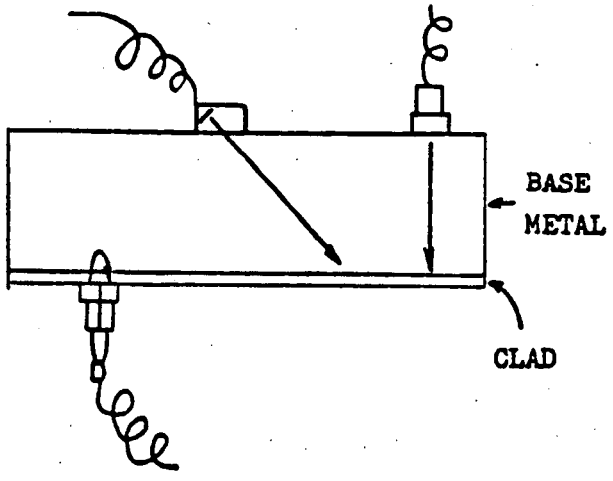

☐ DUAL SEARCH UNIT

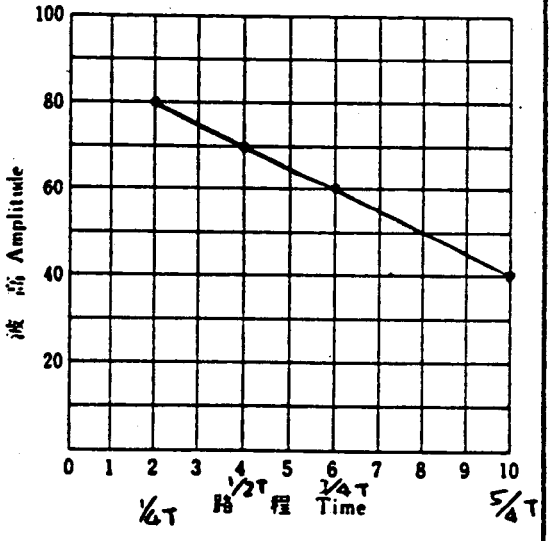

探傷全幅 Full Scale — mm

結果 RESULT			
☑ 合格(AC) ☑ 無欠陥 NO INDICATION ☐ 有欠陥 RECORDABLE IND.	日付 DATE	客先/CUSTOMER'S REPRESENTATIVE	日付 DATE
		承認 APPROVED BY	日付 DATE 2/9/87
		担当 CHECKED BY	日付 DATE 2/9/87 レベル(L)-III
		担当 EXAMINED BY I-410 K.FUNAIO Jul.9 '87	日付 DATE レベル(L)-II

UT

検査記録番号 RECORD NO.	頁 PAGE
UTP- 480 - 01 (3/3)	

超音波探傷検査記録
ULTRASONIC EXAMINATION RECORD

検査項目 SUBJECT: ☑ BEFORE ☐ AFTER PWHT

注文主 CUSTOMER: WESTINGHOUSE ELECTRIC CORPORATION

ブロック名称/系統名 BLOCK/LINE NAME: UT BLOCK

契約番号 CUSTOMER'S REF. NO.: IMS004380 / PE62323MSA

部材/継手/スプール番号 PART/JOINT/SPOOL NO.: ☐ BASE METAL ☑ CLAD

工事番号 MANUFACTURER'S ORDER NO.: 5501 - 480

方案/図面番号 SPEC./DWG NO.: ☐ 026R008 REV.1 ☑ 026R009 REV.1

工事名称 PROJECT/WORK NAME: INDIAN POINT #3 S.G. CHANNEL HEAD

検査場所 LOCATION: IHI YOKOHAMA NO.1 WORKS

材質 MATERIAL: SA508-3 + CLAD

板厚 THICKNESS: 5 mm

探傷方法 SEARCHING METHOD: PULSE REFLECTION — L 0° ☐ / S 45° ☐ / S 60° ☐ / ☑ L DUAL

表面状態 SURFACE CONDITION: ☐ 溶接のまま AS WELDED ☑ 研削仕上 GROUND ☐ 機械仕上 MACHINED ☐

使用機器/識別番号 INSTRUMENT/IDENTIF. NO.: ☑ USK 7 / 2270 ☐

周波数 FREQUENCY: ☐ 2 MHz ☑ 4 MHz

対比試験片 REF.BLOCK/STANDARD TEST BLOCK: ☑ ASME TYPE CLAD ☐

感度 SENSITIVITY: T = 80 %

使用探触子/識別番号 SEARCHING UNIT/IDENTIF. NO.:
- L 0°: ☐ B2S-N
- S 45°: ☐ WB45-N2 ☐ MWB45-N2
- S 60°: ☐ ☐
- ☑ L DUAL: ☐ SEB-4E ☑ MSEB-4E

パルス巾 PULSE LENGTH: —

ゲイン GAIN: 34 dB + 6 dB SCAN.

リジェクトコントロール REJECT CONTROL: OFF

接触媒体 COUPLANT: ☐ 機械油 MACHINE-OIL ☐ 水 WATER ☐ HV-15 ☑ SONICOAT BSLG

検査詳細 EXAMINATION DETAILS

検査年月日 DATE EXAMINED: Jul. 9 '87

☐ ANGLE BEAM ☐ STRAIGHT BEAM

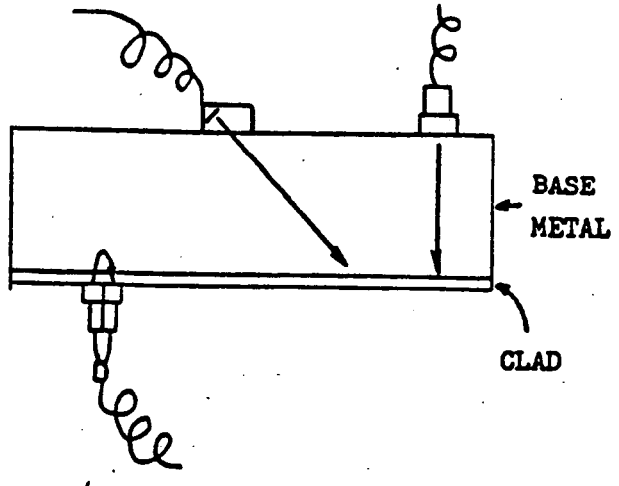

☑ DUAL SEARCH UNIT

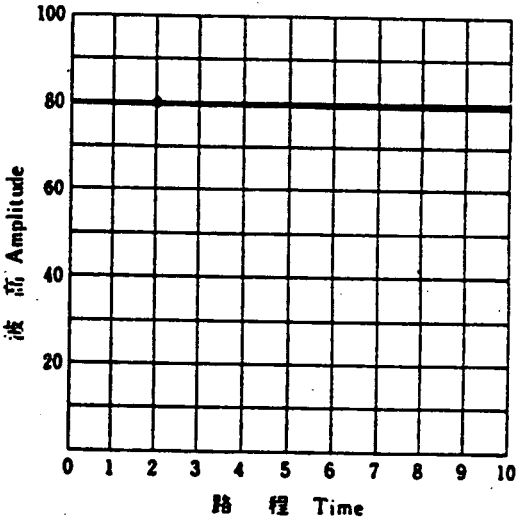

路程全幅 Full Scale — mm

結果 RESULT
☑ 合格 (AC)
☑ 無欠陥 NO INDICATION
☐ 有欠陥 RECORDABLE IND.

日/日 DATE

客先/CUSTOMER'S REPRESENTATIVE

日/日 DATE

承認 APPROVED BY for Okubo 7/9/87 日/日 DATE

担当 CHECKED BY Okubo 7/9/87 日/日 DATE レベル (L) - III

担当 EXAMINED BY I-410 K.FUNATO Jul. 9 '87 日/日 DATE レベル (L) -

UT

検査記録番号 RECORD NO.	頁 PAGE
UTP- 480 - 02 (1/3)	

超音波探傷検査記録
ULTRASONIC EXAMINATION RECORD

検査項目 SUBJECT: ☐ BEFORE ☑ AFTER PWHT

注文主 CUSTOMER: WESTINGHOUSE ELECTRIC CORPORATION	ブロック名称/系統名 BLOCK/LINE NAME: UT BLOCK
契約番号 CUSTOMER'S REF. NO.: IMS004380 / PE62323MSA	部材/継手/スプール番号 PART/JOINT/SPOOL NO.: ☑ BASE METAL ☐ CLAD
工事番号 MANUFACTURER'S ORDER NO.: 5501 - 480	方案/図面番号 SPEC./DWG NO.: ☑ 026R008 REV.1 ☐ 026R009 REV.1
工事名称 PROJECT/WORK NAME: INDIAN POINT #3 S.G. CHANNEL HEAD	検査場所 LOCATION: IHI YOKOHAMA NO.1 WORKS
材質 MATERIAL: SA508-3 + CLAD	板厚 THICKNESS: 175 mm
探傷方法 SEARCHING METHOD: PULSE REFLECTION ☑ L 0° ☐ S 45° ☐ S 60° ☐ L DUAL ☐	表面状態 SURFACE CONDITION: ☐ 溶接のまま AS-WELDED ☑ 研削仕上 GROUND ☐ 機械仕上 MACHINED ☐
使用機器/識別番号 INSTRUMENT/IDENTIF. NO.: ☑ USK 7 / 2270 ☐	周波数 FREQUENCY: ☑ 2 MHz ☐ 4 MHz
対比試験片 REF.BLOCK/STANDARD TEST BLOCK: ☑ ASME TYPE 7" ☐	感度 SENSITIVITY: 1/2 T = 80 %
使用探触子/識別番号 SEARCHING UNIT/IDENTIF. NO.: ☑ L 0° B2S-N; S 45° ☐ WB45-N2 ☐ MWB45-N2; S 60° ☐ ☐; L DUAL ☐ SEB-4E ☐ MSEB-4E	パルス巾 PULSE LENGTH: —
	ゲイン GAIN: 34 dB + 6 dB SCAM.
	リジェクトコントロール REJECT CONTROL: OFF
	接触媒体 COUPLANT: ☐ 機械油 MACHINE-OIL ☐ 水 WATER ☐ HV-15 ☑ SONICOAT BSLG

検査詳細 EXAMINATION DETAILS

検査年月日 DATE EXAMINED: Aug. 21 '87

☐ ANGLE BEAM ☑ STRAIGHT BEAM

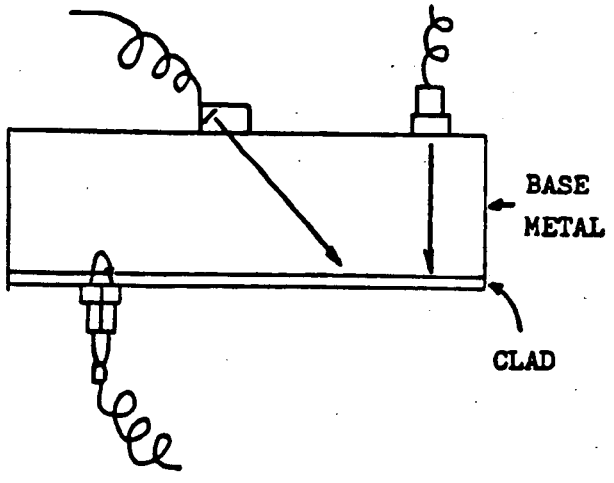

☐ DUAL SEARCH UNIT

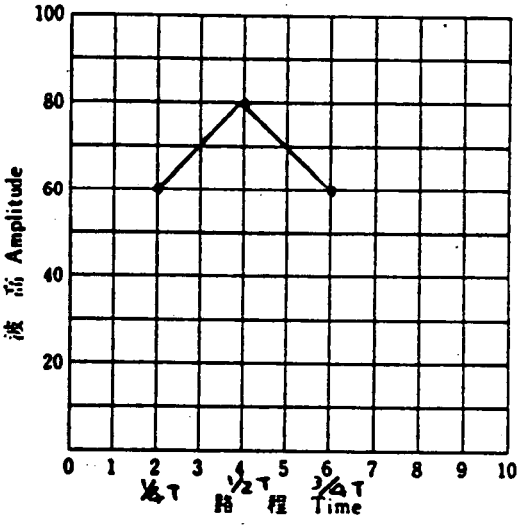

路程全幅 Full Scale — mm

結果 RESULT: ☑ 合格 (AC) ☑ 無欠陥 NO INDICATION ☐ 有欠陥 RECORDABLE IND. ☐ 不合格 (NA)	月/日 DATE 客先/CUSTOMER'S REPRESENTATIVE 月/日 DATE	承認 APPROVED BY for 8/21/87 月/日 DATE 担当 CHECKED BY 8/21/87 月/日 DATE レベル (L)-III 担当 EXAMINED BY I-410 K.FUNATO Aug.21 '87 月/日 DATE レベル (L)-II
		品質管理部検査

UT

検査記録番号 RECORD NO.	頁 PAGE
UTP- 480 -02 (3/3)	

超音波探傷検査記録
ULTRASONIC EXAMINATION RECORD

検査項目 SUBJECT
☐ BEFORE
☑ AFTER PWHT

注文主 CUSTOMER WESTINGHOUSE ELECTRIC CORPORATION	ブロック名称/系統名 BLOCK/LINE NAME UT BLOCK
契約番号 CUSTOMER'S REF. NO. IMS004380 / PE62323MSA	部材/継手/スプール番号 PART/JOINT/SPOOL NO. ☑ BASE METAL ☐ CLAD
工事番号 MANUFACTURER'S ORDER NO. 5501 - 480	方案/図面番号 SPEC./DWG NO. ☑ 026R008 REV.1 ☐ 026R009 REV.1
工事名称 PROJECT/WORK NAME INDIAN POINT #3 S.G. CHANNEL HEAD	検査場所 LOCATION IHI YOKOHAMA NO.1 WORKS
材質 MATERIAL SA508-3 + CLAD	板厚 THICKNESS 175 mm
探傷方法 SEARCHING METHOD PULSE REFLECTION ☐ L 0° ☑ Vs 45° ☐ S 60° ☐ L DUAL ☐	表面状態 SURFACE CONDITION ☐ 溶接のまま AS-WELDED ☑ 研削仕上 GROUND ☐ 機械仕上 MACHINED ☐
使用機器/識別番号 INSTRUMENT/IDENTIF. NO. ☑ USK 7 / 2270 ☐	周波数 FREQUENCY ☑ 2 MHz ☐ 4 MHz
対比試験片 REF.BLOCK/STANDARD TEST BLOCK ☑ ASME TYPE 7" ☐	感度 SENSITIVITY ¼ T = 80 %
使用探触子/識別番号 SEARCHING UNIT/IDENTIF. NO. L 0° ☐ B2S-N Vs 45° ☑ WB45-N2 ☐ MWB45-N2 S 60° ☐ ☐ L DUAL ☐ SEB-4E ☐ MSEB-4E	パルス巾 PULSE LENGTH — ゲイン GAIN 34 dB + 6 dB SCAN. リジェクトコントロール REJECT CONTROL OFF
	接触媒体 COUPLANT ☐ 機械油 MACHINE-OIL ☐ 水 WATER ☐ HV-15 ☑ SONICOAT BSLG

検査詳細 EXAMINATION DETAILS

検査年月日 DATE EXAMINED
Aug.21 '87

☑ ANGLE BEAM ☐ STRAIGHT BEAM

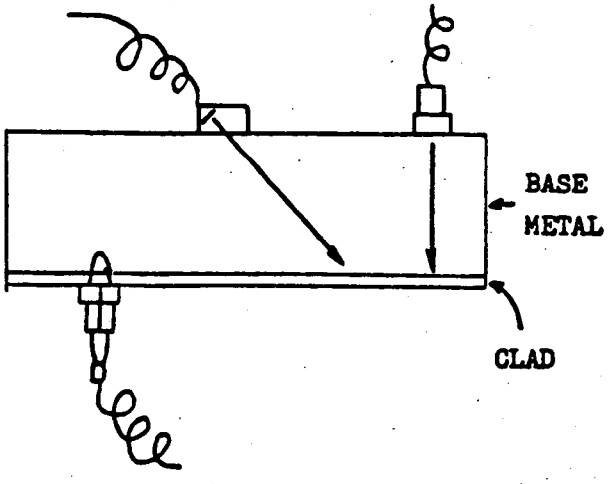

☐ DUAL SEARCH UNIT

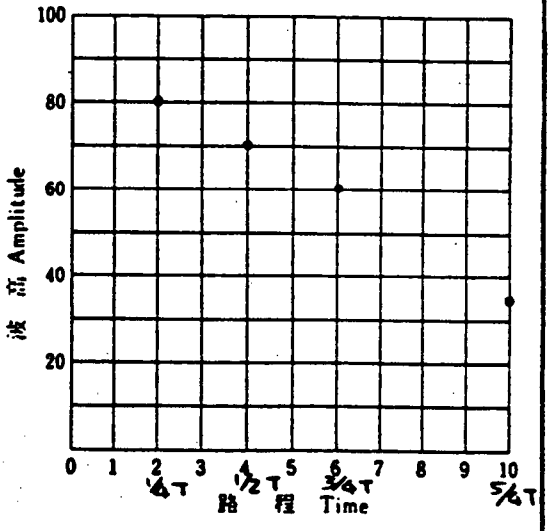

路程全幅
Full Scale — mm

結果 RESULT ☑ 合格 (AC) ☑ 無欠陥 NO INDICATION ☐ 有欠陥 RECORDABLE IND.	月/日 DATE 客先/CUSTOMER'S REPRESENTATIVE 月/日 DATE	責長 APPROVED BY for 8/21/87 月/日 DATE 担当 CHECKED BY 8/21/87 月/日 DATE レベル (L)-II 担当 EXAMINED BY I-410 K.FUNATO Aug.21'87 月/日 DATE レベル (L)-II

UT

検査記録番号 RECORD NO.	頁 PAGE
UTP- 480 - 02 (3/3)	

超音波探傷検査記録
ULTRASONIC EXAMINATION RECORD

検査項目 SUBJECT: ☐ BEFORE ☑ AFTER PWHT

注文主 CUSTOMER: WESTINGHOUSE ELECTRIC CORPORATION	ブロック名称/系統名 BLOCK/LINE NAME: UT BLOCK
契約番号 CUSTOMER'S REF. NO.: IMS004380 / PE62323MSA	部材/継手/スプール番号 PART/JOINT/SPOOL NO.: ☐ BASE METAL ☑ CLAD
工事番号 MANUFACTURER'S ORDER NO.: 5501 - 480	方案/図面番号 SPEC./DWG NO.: ☐ 026R008 REV.1 ☑ 026R009 REV.1
工事名称 PROJECT/WORK NAME: INDIAN POINT #3 S.G. CHANNEL HEAD	検査場所 LOCATION: IHI YOKOHAMA NO.1 WORKS
材質 MATERIAL: SA508-3 + CLAD	板厚 THICKNESS: 5 mm
探傷方法 SEARCHING METHOD: PULSE REFLECTION ☐ L 0° ☐ S 45° ☐ S 60° ☑ L DUAL ☐	表面状態 SURFACE CONDITION: ☐ 溶接のまま AS-WELDED ☐ 研削仕上 GROUND ☐ 機械仕上 MACHINED ☐
使用機器/識別番号 INSTRUMENT/IDENTIF. NO.: ☑ USK 7 / 2270 ☐	周波数 FREQUENCY: ☐ 2 MHz ☑ 4 MHz
対比試験片 REF.BLOCK/STANDARD TEST BLOCK: ☑ ASME TYPE CLAD ☐	感度 SENSITIVITY: T = 80 %
使用探触子/識別番号 SEARCHING UNIT/IDENTIF. NO.: ☐ L 0° B2S-N; ☐ S 45° WB45-N2, MWB45-N2; ☐ S 60°; ☐ L DUAL SEB-4E, ☑ MSEB-4E	パルス巾 PULSE LENGTH: —
	ゲイン GAIN: 36 dB + 6 dB SCAN.
	リジェクトコントロール REJECT CONTROL: OFF
	接触媒体 COUPLANT: ☐ 機械油 MACHINE-OIL ☐ 水 WATER ☐ HV-15 ☑ SONICOAT BSLG

検査詳細 EXAMINATION DETAILS

検査年月日 DATE EXAMINED: Aug. 21 '87

☐ ANGLE BEAM ☐ STRAIGHT BEAM

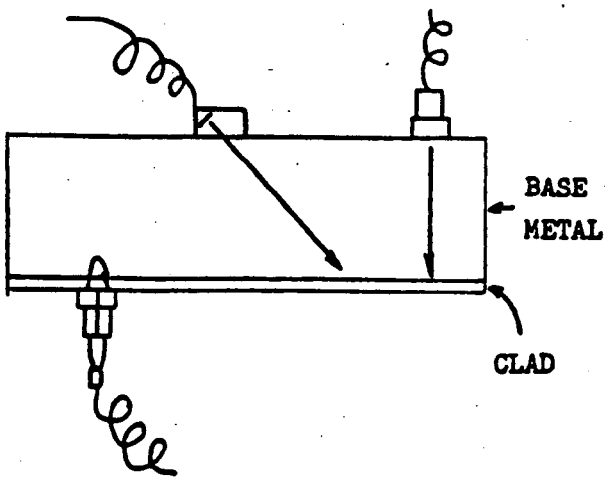

☑ DUAL SEARCH UNIT

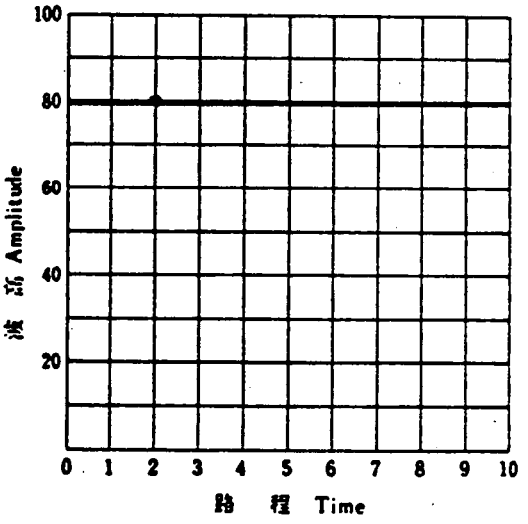

路程全幅 Full Scale — mm

結果 RESULT: ☑ 合格(AC) ☑ 無欠陥 NO INDICATION ☐ 有欠陥 RECORDABLE IND. ☐ 不合格(NA)	月/日 DATE	承認 APPROVED BY for T. Okbata 8/21/87 月/日 DATE
	客先/CUSTOMER'S REPRESENTATIVE	担当 CHECKED BY T. Okbata 8/21/87 月/日 DATE レベル(L) - III
	月/日 DATE	担当 EXAMINED BY I-410 K.FUNATO Aug. 21'87 月/日 DATE レベル(L) - II
		品質管理部検査 理

WESTINGHOUSE NUCLEAR SERVICE DIVISION
INSPECTION SERVICES

ULTRASONIC EQUIPMENT
(CALIBRATION BLOCKS)

PLANT Indian Point UNIT No.3 YEAR 1988

NO.	MANUFACTURER	MODEL	SERIAL NO.
1.	Applied Test Systems	Stepwedge	796490
2.	Applied Test Systems	Rhombus	796484

FORM 49215

THE MARK OF RELIABILITY

APPLIED TEST SYSTEMS, INC.

348 New Castle Road • P.O. Box 1529 • Butler, PA 16003
Telephone: 412/283-1212 • Telex: 86-6727 ATS BUTLER

CERTIFICATE OF COMPLIANCE
ULTRASONIC TEST BLOCK

ORDER NO. 6860411

CUSTOMER R.L. Halliday Co.
525 McNeilly Road
Pittsburgh, PA 15226

DATE March 21, 1986

PURCHASE ORDER NO. 16216

ITEM	TEST BLOCK	SER. NO.	MATERIAL	TEST BLOCK SPECIFICATION
		796477		
		796478		
		796479		
1	1" Angle Beam	796480	Aisi C1018 Steel	Ats dwg. 1-1079
		796481		and datum Eldt.
		796482		"
		796483		
		796484		
		796485		
		796486		
		796487		
		796488		
2	4-Step	796489	Aisi C1018 Steel	Ats dwg. 2-1157.
		796490		
		796491		
		796492		
		796493		
		796494		

These test blocks have been manufactured in accordance with applicable specifications, and have been inspected and found to be dimensionally accurate using measuring equipment traceable to the National Bureau of Standards.

Kim Papanus Quality Control Inspector

THE MARK OF RELIABILITY

APPLIED TEST SYSTEMS, INC.

348 New Castle Road • P.O. Box 1529 • Butler, PA 16003
Telephone: 412/283-1212 • Telex: 86-6727 ATS BUTLER

CERTIFICATE OF COMPLIANCE
ULTRASONIC TEST BLOCK

ORDER NO. 6860411

CUSTOMER R.L. Halliday Co.
525 McNeilly Road
Pittsburgh, PA 15226

DATE March 21, 1986

PURCHASE ORDER NO. 16216

ITEM	TEST BLOCK	SER. NO.	MATERIAL	TEST BLOCK SPECIFICATION
		796477		
		796478		
		796479		
1	1" Angle Beam	796480	Aisi C1018 Steel	Ats dwg. 1-1079
		796481		and dotco E164.
		796482		
		796483		
		796484		
		796485		
		796486		
		796487		
		796488		
2	4-Step	796489	Aisi C1018 Steel	Ats dwg. 2-1157.
		796490		
		796491		
		796492		
		796493		
		796494		

These test blocks have been manufactured in accordance with applicable specifications, and have been inspected and found to be dimensionally accurate using measuring equipment traceable to the National Bureau of Standards.

Kris Papanu Quality Control Inspector

NOTES:

1. WHEN MEASURED FROM EITHER SIDE OF CENTERLINE MINIMUM LENGTH AT BOTTOM OF AXIAL NOTCHES TO BE 0.5" AS SHOWN IN SIDE VIEW.
2. MILL NOTCH DEPTH 10% OF MEASURED THICKNESS +0.005"-0.010".
3. PREP ALLOWED IN AREA OF SIDE DRILLED HOLE SHALL NOT INFRINGE ON HOLE SIZE REQUIREMENTS.
4. CIRCUMFERENTIAL HOLES AND NOTCHES TO BE PLUS OR MINUS 0.1" FROM ENDS.
5. LOCATE AXIAL NOTCHES SO AS NOT TO IMPOSE ON END OF HOLES OR ON END OF NOTCHES AT CENTERLINE.
6. FLAT SIDE OF NOTCHES TO BE PERPENDICULAR NOTCHED SURFACES, WITHIN 2°.
7. HOLE LOCATION TO BE BASED ON ACTUAL "T".
8. SIDE DRILLED HOLE DIAMETER TOLERANCE TO BE WITHIN ±0.03".
9. DRILL HOLES PERPENDICULAR TO RADIUS SO THAT THEY HAVE A REFLECTIVE LENGTH OF 1.00" CENTERED ON A RADIAL LINE, 3.43° FROM THE BLOCK EDGE.
10. HOLE AND NOTCH LENGTH -0" + 0.03".
11. ARC DIMENSION +360° AND - 0.080".
12. BLOCK LENGTH +2.00" -0.25"
13. ALL TOLERANCES FOR DIMENSIONS ±0.03" (±1°) UNLESS OTHERWISE SPECIFIED.
14. APPLICABLE TO ASME BOILER AND PRESSURE VESSEL CODE SECTION XI-1983 EDITION THRU SUMMER 1983 ADDENDA.

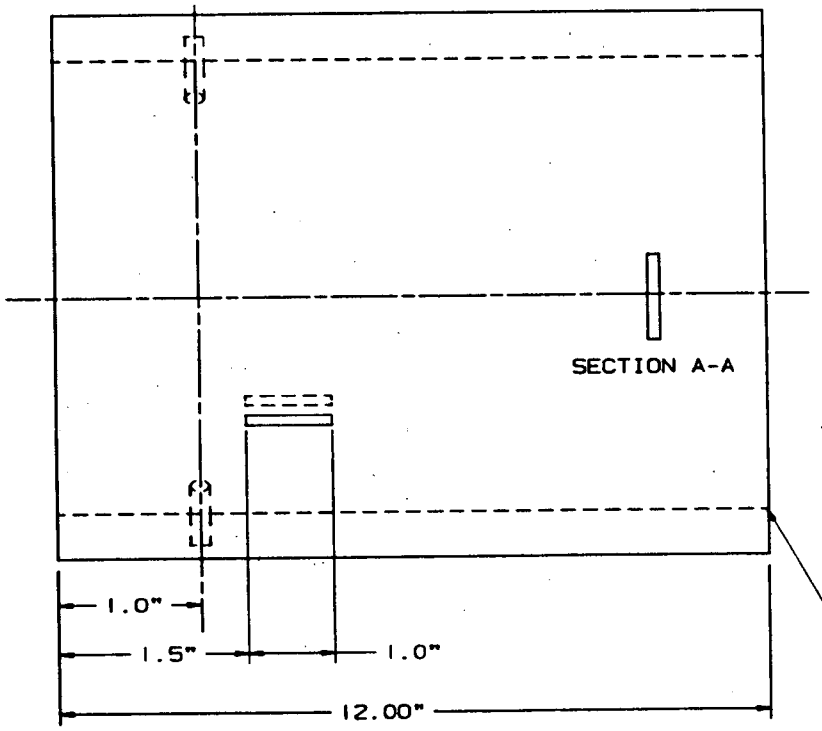

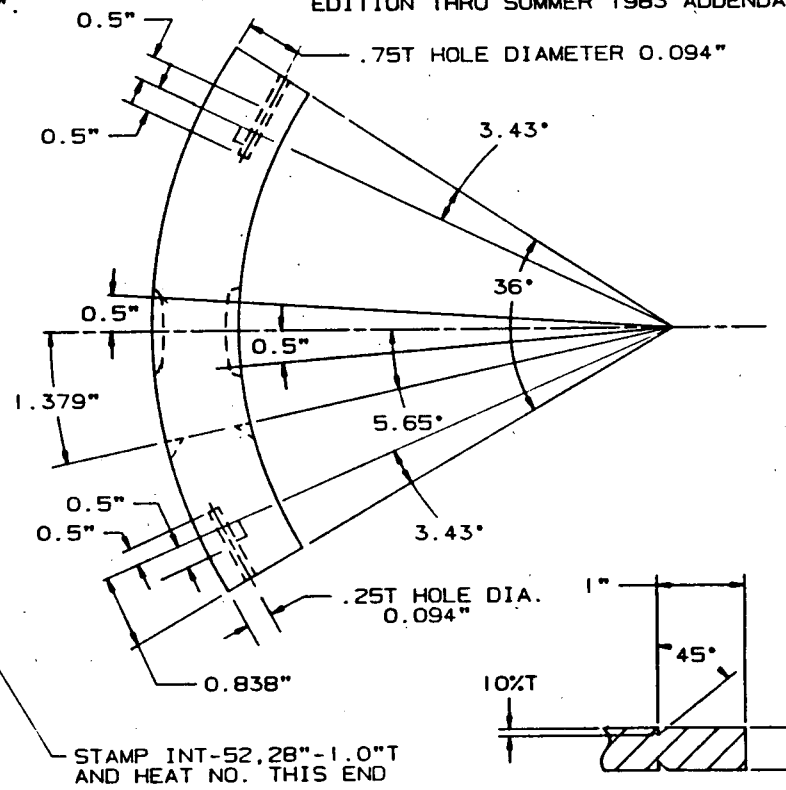

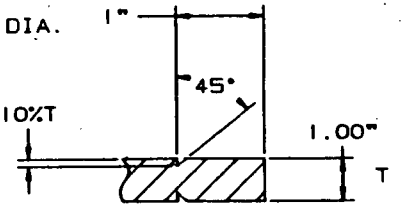

SECTION A-A

NSD TECHNICAL APPROVAL Phillip C. Burkes	DATE 12-18-89	Westinghouse Electric Corporation NSD-INSPECTION SERVICES
LEVEL III APPROVAL Rick D. Riddel	DATE 12-18-89	TITLE CALIBRATION BLOCK INT-52 28"-1.00"T SA516 GRADE 70 CARBON STEEL HEAT NO.: Y85923
PRODUCT ASSURANCE APPROVAL Jack L Wilder	DATE 12-18-89	
PRODUCT LINE APPROVAL S. Chazen	DATE 12-18-89	SK. NO. INT-52 REV. 1

Nuclear Services Division

QUALITY RELEASE

QR- 21382 REV. Ø

PURCHASE ORDER	PART NAME	DRAWING & REV.
MA-37205-D	CALIBRATION BLOCKS	SKETCH NOS INT-52, REV 1, INT-53, REV 0, INT-54, REV 1

PAR NO.	CHG NOTICE NO.	P.O. ITEM NO.	PROJ./S.O. NO.	QTY. ON ORDER	QTY. RELEASED
N/A	1 & 2	01, 02 & 03	IN9I-DC459	3 PCS TOTAL	3 PCS TOTAL

SUPPLIER	E. SPEC. & REV.	ORDER
TOOLING SPECIALISTS INC (L&S MACHINE)	N/A	COMPLETE ☒ YES ☐ NO

SERIAL OR IDENTIFICATION NOS.

CALIBRATION BLOCKS IDENTIFIED AS FOLLOWS: INT-52, REV 1; INT-53, REV 0 AND INT-54, REV 1.

The equipment shown hereon is released by W Quality Assurance. Shipment may be made subject to authorization by W Purchasing. In the Audit Checklist below, an A indicates acceptability, a C indicates a contingency and a W indicates that W QA has waived the auditing or witnessing of the attribute. All non-applicable items are lined out.

AUDIT CHECKLIST

A	Material Certifications	~~Non-Operating Electrical Tests~~	
~~Heat Treat Records~~		~~Operating Electrical Test~~	
~~RT Film and Records~~		~~Pressure Test~~	
~~PT/MT Records~~		~~Seat Tightness Test~~	
A	Visual	~~Performance Test~~	
A	Dimensional DIMENSIONAL DATA	A	Cleanliness
A	UT Records FOR INT-52 & INT-53 ONLY	A	Packaging
~~Personnel Qualification: Welding, NDT~~		~~Code Form~~	
A	TSI C of C	~~Painting~~	

DEVIATION NOTICES AND REMARKS (ALL DEVIATIONS HAVE BEEN APPROVED BY THE RESPONSIBLE WESTINGHOUSE ENGINEER UNLESS A SPECIFIC EXCEPTION IS STATED.)

THERE ARE NO DEVIATION NOTICES APPLICABLE TO THESE PARTS.

CAL. BLOCKS ARE ACCEPTABLE AND RELEASED FOR SHIPMENT TO NYPA, INDIAN POINT UNIT #3 PER P.O. REQUIREMENTS.

THE SUPPLIER CERTIFIES that for the equipment and material released, all contractual requirements have been met. Approved deviations, if any, are listed above.

SUPPLIER SIGNATURE Rodney Mangre DATE 1-15-90

TITLE

The equipment shown hereon is released by (W) Quality Assurance. Shipment may be made subject to authorization by (W) Purchasing.

The equipment supplier has certified that the equipment above meets all requirements of the purchase order, drawings and specifications. Westinghouse has reviewed evidence supporting this release and except as specified above has detected no deviations from such requirements. This release does not waive any rights Westinghouse may have under the purchase order including Westinghouse's right to reject the equipment upon discovery of any such deviations after arrival at destination.

1/15/90

Westinghouse Quality Assurance Representative

NSD 1010 01-89

REQUISITIONER

TOOLING SPECIALISTS INCORPORATED

MACHINE TOOL BUILDERS — SPECIAL MACHINING — DIES — ENGINEERING SERVICE

P. O. Box 251, LATROBE, PA. 15650 Phone: (412) 539-2534

CERTIFICATE OF COMPLIANCE

Date: December 27, 1989

Westinghouse Electric Corporation
Nuclear Energy Systems
P.O. Box 355
Pittsburgh, PA 15230

Gentlemen:

This is to certify that the products shipped to you, per the information listed below, comply to the requirements of this order.

All required tests and inspections have been performed.

Documented evidence of compliance supporting this certification is available at our facility for review.

C/N 1 & 2

Westinghouse Purchase Order Number: MA-37205-D NSDN Number: None

TSI Shop Order Number: 51-2108 Westinghouse QR: 21382, Rev 0

Description:

(1) each P.O. Item 001, From W material Manufacture Calibration Block INT-52, Rev 1
(1) each P.O. Item 002, From W material Manufacture Calibration Block INT-53, Rev 0
(1) each P.O. Item 003, From W material Manufacture Calibration Block INT-54, Rev 1

Very truly yours,

Paul M Pettiman

Quality Assurance

PMP/sb

L & S Machine Company, Inc.

Donahue Road
R. D. 2, Box 317
Latrobe, PA 15650

INSPECTION PLAN NO.:
REPORT NO.:

Customer	Customer P.O. No.	L & S W.O. No.	L & S Inspector	Date
WESTINGHOUSE NSD	MA 37205	6586	[illegible]	12-26-89
	Drawing No. INT-52	Rev. 1	Customer Inspector	Date
Part Name: CALIBRATION BLOCK	Group/Item: INT-52	Number of Pieces: This Report 1 Total Order 3	Heat No. Y85923	

Drawing Dimensions and Tolerances	Char. Ltr.	Ser./Part No. INT-52, Rev 1	Ser./Part No.	Ser./Part No	Ser./Part No.	Ser./Part No	Ser./Part No.	Ser./Part No.
(1) 12.00		12.037						
(2) 1.0		1.020						
(3) 1.5		1.5						
(4) 1.0		1.001						
(5) 0.5		.5						
(6) 0.6		.5						
(7) .75T HOLE ϕ .094		.762						
(8) 3.43°		3.43°						
(9) 36°		36°						
(10) 5.65°		565°						
(11) 3.43°		3.43°						
(12) 1"		1.016						
(13) 45°		45°						
(14) 1.00 T=1.00		1.041						
(15) 10% T		.103						
(16) .25T HOLE ϕ .094		.240						
(17) .838		.838						
(18) 0.5		.5						
(19) 0.5		.5						
(20) 1.379		1.375						
(21) 0.5		.5						
(22) 0.5		.5						

Comments

material certification

Ryerson
a subsidiary of
Inland Steel Industries, Inc.

	DATE	OUR ORDER NO.	YOUR ORDER NO.
L & S Machine Co. Inc. RD 2 Latrobe, PA 15650	12/14/89	11 -704752	LSM-70047-89

ITEM DESCRIPTION	HEAT NUMBER
1 pc ASME SA 516 GRADE 70 CYLINDER 28" OD x 1" plate x 13"	Y85923

A survey of our material sources has indicated that neither mercury nor radioactive substances is introduced into their products, or is used in any of their processes. While we make no independent tests for mercury or radiation, there is nothing in Ryerson's system which could be expected to introduce contamination of either type.

This document certifies that the material described above was shipped on your order and that the attached data is a true copy of the test report furnished by the producer with said material.

JOSEPH T. RYERSON & SON, INC.

By _____ (Authorized Agent)

COPYRIGHT 1988, JOSEPH T. RYERSON & SON, INC.
FORM 2301-44-2 Rev. 8-88

DIVISION OF USX CORPORATION

01.000.0772 (REV. 4/87)

Metallurgical Test Report

2. JOB, CONTRACT NO.	P.O. DATE 02/15/89	PURCHASE ORDER NO. 6338	
	SHIPPERS NO. T05251 03 20 89	MILL ORDER NO. UE22145	INVOICE NO. 154-25427
	VEHICLE IDENTIFY 10030F	ME	39649

VENDOR SOLD TO: GARY WORKS, GARY, INDIANA 46402

SHIP TO: CD

THIS IS TO CERTIFY TH PRODUCT DESCRIBED HER MFGD., SAMPLED, TESTE INSPECTED IN ACCORDAN THE SPECIFICATION AND FILLS REQUIREMENTS IN RESPECT.

PREPARED BY THE OFFI J. J. HARRINGTON

DATE 3-21-89

PLATE CARBON ASTM A516-86 GRADE 70 AND ASME SA516-1986 EDITION 1987 ADDENDA GRADE 70 PRESSURE VESSEL QUALITY

NSP:01 MILL RA/SN CERTIFIED T/R ANALYSIS LADLE ANALYSIS PRELIMINARY T/R TO ACCOMPANY SHIPPING PAPERS

ITEM NO.	MATERIAL DESCRIPTION: THICKNESS OR SECTION	WIDTH DIA. OR FT. WT.	LENGTH	QUANTITY	WEIGHT	HEAT NO.	TEST OR PIECE IDENTITY	YIELD PT. KSI	TENSILE STR. KSI	ELONGATION % IN 8"	IN 2"
02	1.0000	96.0000	300"	02	16336	YB5923	SS 01 *	49.8	76.0	21.0	36.0

"USS, A DIVISION OF USX, HEREBY CERTIFIES THAT ALL MANUFACTURING PROCESSES, INCLUDING MELTING, INVOLVED IN THE PRODUCTION OF USS STEEL MILL PRODUCTS OCCUR ENTIRELY IN THE UNITED STATES."

END OF DATA

APXY;
APXZ

*YIELD STRENGTH @ 0.5% E.U.L.

HEAT NO.	TYPE	C	MN	P	S	SI	CU	NI	CR	MO	SN	AL	N	V	B	TI	CB	CO
YB5923	HEAT	23	11	010	006	20	02	02	002	00				000			000	

END OF DATA

AT & F QA

APR 13 1989

DECIMAL POSITION IS ASSUMED IF NOT INDICATED BY THE LEFT MARGIN VERTICAL DOTTED LINE OR DECIMAL POINT.

HERRON TESTING LABORATORIES, INC.
5405 E. SCHAAF ROAD • CLEVELAND, OHIO 44131
(216) 524-1450 • FAX: (216) 524-1459
"Testing and Analysis Since 1911"

NON-DESTRUCTIVE INSPECTION

CHARLOTTE DIVISION
1200-E Westinghouse Blvd
P.O. Box 7564
Charlotte, North Carolina 28241
(704) 588-1131 • FAX: (704) 588-5412

To:

Page 1 of 2
Herron File No. T9148
Purchase Order No. M5363C
Shipper No.
Inspected 12/12/89 Reported 12/12/89

Standard: ASME SECT. VIII DIV. 1 APPENDIX 12 Level: _____ Class: _____ Grade: _____

Procedure: ASME SECT. V ART. 5 SECT. T-540

☐ Magnetic Particle ☐ Wet ☐ Dry ☐ Fluorescent ☐ Visible
☐ Penetrant ☐ Visible ☐ Fluorescent
☐ Thickness
☒ Ultrasonic ☐ _____

Part No: _____ Contract Number: _____

Quantity: 1 Total Accepted: 1 Total Rejected: 0

QUANTITY	PART NUMBER	DESCRIPTION	RESULTS
1		CYLINDER 1"X 28" O.D. X 13' LG. ULTRASONIC INSPECTION OF THE LONGITUDINAL SEAM WELD.	ACCEPTABLE.

COMMENTS

FOR EQUIPMENT USED AND PROCEDURE DETAILS, SEE ATTACHED ULTRASONIC INSPECTION TECHNIQUE SHEET DTD (12/12/89)

By Mark Barrington Certification SNT-TC-1A Level II

HERRON TESTING LABORATORIES, INC.
5405 E. SCHAAF ROAD • CLEVELAND, OHIO 44131
(216) 524-1450 • FAX: (216) 524-1459
"Testing and Analysis Since 1911"

NON-DESTRUCTIVE INSPECTION

CHARLOTTE DIVISION
12100-E Westinghouse Blvd.
P.O. Box 7564
Charlotte, North Carolina 28241
(704) 588-1131 • FAX: (704) 588-5412

To:

Page 1 of 1
Herron File No. T
Purchase Order No. MS-363A
Shipper No.
Inspected 11-28-89 Reported 11-28-89

andard: ASTM A-435 Level: Class: Grade:

ocedure: ASTM A-435 S.A.

rt No: Contract Number:

antity: 1 Total Accepted: 1 Total Rejected: -0-

☐ Magnetic Particle ☐ Wet ☐ Dry ☐ Fluorescent ☐ Visible
☐ Penetrant ☐ Visible ☐ Fluorescent
☐ Thickness
☒ Ultrasonic
☐

QUANTITY	PART NUMBER	DESCRIPTION	RESULTS
1		PLATE: 2" x 13" x 84" HEAT: 485923 WHSE: ARX2E MAT.: SA516-70	ACCEPTABLE

COMMENTS EQUIPMENT: KRAUTKRAMER USL-38 WITH 2" DIA., 2.25 MHZ LONGITUDINAL MODE TRANSDUCER.

COUPLANT: EXOSEN #14

SECTION PERFORMED BY: L. Billie

By Mark Bromley Certification SNT-TC-1A Level II

Falsification is a felony under federal statutes including federal law, Title 18, Chapter 47

NOTES:
1. DRILL AND REAM 3 HOLES 1.5" DEEP; HOLE DIAMETER TOLERANCE ±0.03".
2. HOLE LOCATION THROUGH THICKNESS TOLERANCE ±0.12".
3. BLOCK THICKNESS TOLERANCE +0.06" -0.00".
4. BLOCK LENGTH AND WIDTH TOLERANCE + 2.0" -0.00".
5. SURFACE FINISH TO BE 63 RMS TO 250 RMS.
6. APPLICABLE TO ASME BOILER AND PRESSURE VESSEL CODE SECTION XI-1983 EDITION THRU SUMMER 1983 ADDENDA.

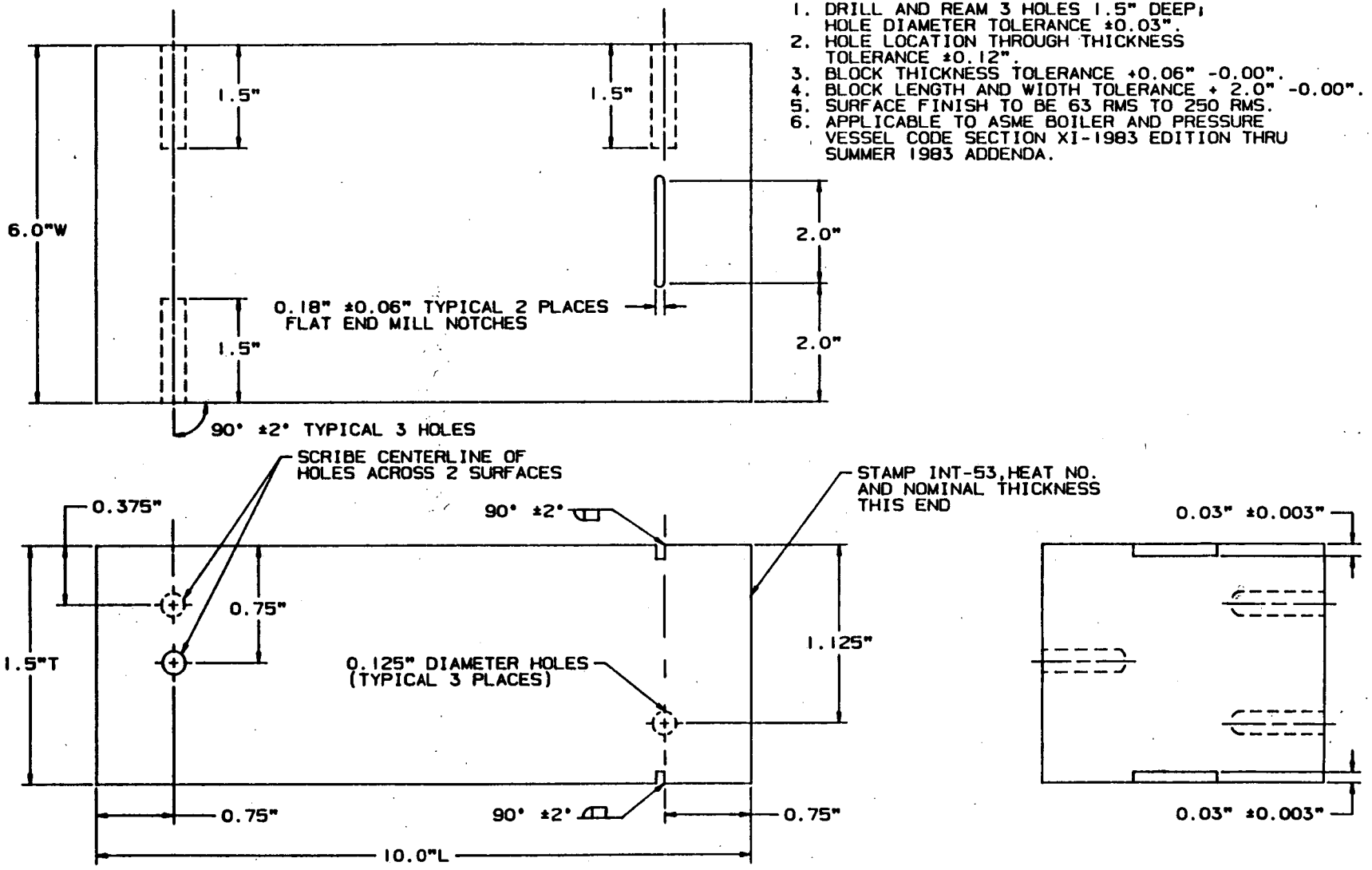

NSD TECHNICAL APPROVAL Phillip C. Burkes	DATE 11-29-89	Westinghouse Electric Corporation NSD-INSPECTION SERVICES
LEVEL III APPROVAL	DATE 11-29-9	TITLE CALIBRATION BLOCK INT-53 PRESSURIZER SKIRT 1.5"T X 10.0"L X 6.0"W SA516 GRADE 70 CARBON STEEL HEAT NO.:801E07370
PRODUCT ASSURANCE APPROVAL	DATE 12-1-89	
PRODUCT LINE APPROVAL	DATE 12-1-89	SK. NO. INT-53 REV. 0

Nuclear Services Division

QUALITY RELEASE

QR- 21382 REV. Ø

PURCHASE ORDER	PART NAME	DRAWING & REV.
MA-37205-D	CALIBRATION BLOCKS	SKETCH NOS INT-52, REV 1, INT-53, REV 0, INT-54, REV 1

PAR NO.	CHG. NOTICE NO.	P.O. ITEM NO.	PROJ./S.O. NO.	QTY. ON ORDER	QTY. RELEASED
N/A	1 & 2	01, 02 & 03	IN9I-DC459	3 PCS TOTAL	3 PCS TOTAL

SUPPLIER	E. SPEC. & REV.	ORDER
TOOLING SPECIALISTS INC (L&S MACHINE)	N/A	COMPLETE ☒ YES ☐ NO

SERIAL OR IDENTIFICATION NOS.

CALIBRATION BLOCKS IDENTIFIED AS FOLLOWS: INT-52, REV 1; INT-53, REV 0 AND INT-54, REV 1.

The equipment shown hereon is released by W Quality Assurance. Shipment may be made subject to authorization by W Purchasing. In the Audit Checklist below, an A indicates acceptability, a C indicates a contingency and a W indicates that W QA has waived the auditing or witnessing of the attribute. All non-applicable items are lined out.

AUDIT CHECKLIST

[A] Material Certifications	~~Non-Operating Electrical Tests~~
~~Heat Treat Records~~	~~Operating Electrical Test~~
~~RT Film and Records~~	~~Pressure Test~~
~~PT/MT Records~~	~~Seat Tightness Test~~
[A] Visual	~~Performance Test~~
[A] Dimensional DIMENSIONAL DATA	[A] Cleanliness
[A] UT Records FOR INT-52 & INT-53 ONLY	[A] Packaging
~~Personnel Qualification: Welding, NDT~~	~~Code Form~~
[A] TSI C of C	~~Painting~~
[ ]	[ ]

DEVIATION NOTICES AND REMARKS (ALL DEVIATIONS HAVE BEEN APPROVED BY THE RESPONSIBLE WESTINGHOUSE ENGINEER UNLESS A SPECIFIC EXCEPTION IS STATED.)

THERE ARE NO DEVIATION NOTICES APPLICABLE TO THESE PARTS.

CAL. BLOCKS ARE ACCEPTABLE AND RELEASED FOR SHIPMENT TO NYPA, INDIAN POINT UNIT #3 PER P.O. REQUIREMENTS.

THE SUPPLIER CERTIFIES that for the equipment and material released, all contractual requirements have been met. Approved deviations, if any, are listed above.

SUPPLIER SIGNATURE Rondon Mangge DATE 1-15-90

TITLE

The equipment shown hereon is released by W Quality Assurance. Shipment may be made subject to authorization by W Purchasing.

The equipment supplier has certified that the equipment above meets all requirements of the purchase order, drawings and specifications. Westinghouse has reviewed evidence supporting this release and except as specified above has detected no deviations from such requirements. This release does not waive any rights Westinghouse may have under the purchase order including Westinghouse's right to reject the equipment upon discovery of any such deviations after arrival at destination.

1/15/90

Westinghouse Quality Assurance Representative

NSD 1010 01-89

REQUISITIONER

TOOLING SPECIALISTS INCORPORATED

MACHINE TOOL BUILDERS — SPECIAL MACHINING — DIES — ENGINEERING SERVICE

P. O. Box 251, LATROBE, PA. 15650 Phone: (412) 539-2534

CERTIFICATE OF COMPLIANCE

Date: December 27, 1989

Westinghouse Electric Corporation
Nuclear Energy Systems
P.O. Box 355
Pittsburgh, PA 15230

Gentlemen:

This is to certify that the products shipped to you, per the information listed below, comply to the requirements of this order.

All required tests and inspections have been performed.

Documented evidence of compliance supporting this certification is available at our facility for review.

C/N 1 & 2

Westinghouse Purchase Order Number: MA-37205-D NSDN Number: None

TSI Shop Order Number: 51-2108 Westinghouse QR: 21382, Rev 0

Description:

(1) each P.O. Item 001, From W material Manufacture Calibration Block INT-52, Rev
(1) each P.O. Item 002, From W material Manufacture Calibration Block INT-53, Rev
(1) each P.O. Item 003, From W material Manufacture Calibration Block INT-54, Rev

Very truly yours,

Paul M Pettiman

Quality Assurance

PMP/sb

L & S Machine Company, Inc.

Donahue Road
R. D. 2, Box 317
Latrobe, PA 15650

INSPECTION PLAN NO.:
REPORT NO.:

Customer	Customer P.O. No.	L & S W.O. No.	L & S Inspector	Date
WESTINGHOUSE NSD	MA 37205D	6586	D. Bolling	12-21-89
	Drawing No. INT-53	Rev. 0	Customer Inspector	Date

Part Name	Group/Item	Number of Pieces	Heat No.
CALIBRATION BLOCK		This Report 1 Total Order 3	801E07370

Drawing Dimensions and Tolerances	Char. Ltr.	Ser./Part No. INT-53-Rev 0	Ser./Part No.	Ser./Part No.	Ser./Part No.	Ser./Part No.	Ser./Part No.	Ser./Part No.
1) 6.0 W		6.020						
2) 1.5		1.527						
3) 1.5		1.523						
4) 90° ± 2° TYP.		90°						
5) 1.5		1.526						
6) 2.0		1.999						
7) 2.0		2.020						
8) 90° ± 2°		90°						
9) 1.125		1.127						
10) .03 ± .003		.031 ~~.030~~	DB 12-20-89					
11) .03 ± .003		.030						
12) .75		.747						
13) .125 ⌀ TYP		.124						
14) 90° ± 2°		90°						
15) 10.0" L		10.021						
16) .75		.751						
17) .75		.751						
18) 1.5 T		1.520						
19) .375		.375						
20) 0.18 ± .06 TYP		.191						
21) NOTES 1 THRU 6		Complied with						
22) Stamp INT-53, HT No. & Nominal Thickness		Complied with						

Comments

BETHLEHEM STEEL CORPORATION
QUALITY ASSURANCE DEPARTMENT

REPORT OF TESTS AND ANALYSES

BURNS HARBOR PLANT

ORDER NO.	DATE SHIPPED	CUSTOMER ORDER NO.		PAGE
003-08762	4-26-89	STRINDU.NICK	TRLR 3235	1

HEAT NUMBER	PAT NO.	HEAT NUMBER	NO. PCS	THICKNESS INCHES	WIDTH OR DIA. INCHES	LENGTH INCHES	WEIGHT POUNDS	YIELD POINT PSI	TENSILE STRENGTH PSI	ELONG IN	%
QUALITY STEEL MELTED & MANUFACTURED IN THE U. S. A.											
PLATES - ASTM A516-86 GR 70 PVQ. ASME SA516 GR 70 PVQ 1987 ADD --- GAS CUT 4 S1026 PLT NORMAL 126											
NFST - NFST EA MILL ORD SEP LIFT MAX 10 TON-SIZES & GAUGES SEP UNLDG ON-PLATE HOOK											
COS 6405 SH 018-0952											
PLATES HEAT TREATED WITH TEST SPECIMENS ATTACHED AND YIELD STRENGTH @ .5% E.U. MERCURY IN ANY FORM HAS NOT BEEN USED IN THE PRODUCTION OF THIS ORDER AQBKC											
B 33320		813H60360	1	2 N	96 1650 DEG F - 300 MIN		14335	49000	77400	2	30
B 33304		801E07370	1	1 3/4 N	96 1650 DEG F - 300 MIN AQBNN		14293	55400	64400	2	27
B 33307		813H60350	1	1 3/4 N	96 1650 DEG F - 300 MIN AQBAS		14293	48500	77900	2	30

D - DIPPON TEMPERATURE T - TEMPERING TEMPERATURE N - NORMALIZING TEMPERATURE

HEAT NUMBER	PAT NO.	HEAT NUMBER	HARD	SPEC	THICKNESS INCHES	TYPE	SIZE	DIR	TEST TEMP °F	CHARPY IMPACT FT. LBS.							

CHEMICAL ANALYSIS

HEAT NUMBER	C	Mn	P	S	Si	Cu	Ni	Cr	Mo	V	Al	Sn	N	Ca	B
813H60360	.22	1.07	.025	.010	.218	.012	.02	.04	.007	.003		.049		.002	
801E07370	.22	1.09	.015	.012	.264	.274	.20	.21	.060	.003		.048		.002	
813H60350	.22	1.07	.017	.014	.201	.019	.03	.04	.013	.003		.041		.002	

I CERTIFY THAT THIS REPORT OF REPORTS ARE A TRUE AND CORRECT COPY OF RECORDS MAINTAINED BY S/E AND BY BETHLEHEM IN COURSE WITH THE REGULATIONS OF THE ORGANIZATION NOTED ABOVE.

SUPT QUALITY ASSURANCE SAR 09:50 06, 01 JAN P.M.

material certification

Ryerson
a subsidiary of
Inland Steel Industries, Inc.

	DATE	OUR ORDER NO.	YOUR ORDER NO.
L & S Machine Co. Inc. RD 2, Box 317 Latrobe, PA 15650	11/8/89	11 BY 703640	LSM-70047-89

ITEM DESCRIPTION	HEAT NUMBER
1 ASME SA 516 GR 70 1-3/4 x 6-1/4 x 0 FT 10-1/4	801E07370
UT TREATED TO ASTM A435	

A survey of our material sources has indicated that neither mercury nor radioactive substances is introduced into their products, or is used in any of their processes. While we make no independent tests for mercury or radiation, there is nothing in Ryerson's system which could be expected to introduce contamination of either type.

This document certifies that the material described above was shipped on your order and that the attached data is a true copy of the test report furnished by the producer with said material.

JOSEPH T. RYERSON & SON, INC.

By _____ (Authorized Agent)

COPYRIGHT 1988, JOSEPH T. RYERSON & SON, INC.
FORM 220.04-2 Rev. 9-88

HERRON TESTING LABORATORIES, INC.
5405 E. SCHAAF ROAD • CLEVELAND, OHIO 44131
(216) 524-1450 • FAX: (216) 524-1459
"Testing and Analysis Since 1911"

CHARLOTTE DIVISION
1200 E Westinghouse Blvd.
P.O. Box 7564
Charlotte, North Carolina 28241
(704) 588 1131 • FAX: (704) 588 5412

NON-DESTRUCTIVE INSPECTION

To: THE AMERICAN TANK & FABRICATING CO.
12314 ELMWOOD AVE.
CLEVELAND, OHIO 44111

Page 1 of 1
Herron File No. 79143
Purchase Order No. 7646-000
Shipper No.
Inspected 10-31-89 Reported 10-31-89

Standard ASTM A-435 Level: Class: Grade:

Procedure: ASTM A-435 S.1

Part No: Contract Number:

Quantity: 1 Total Accepted: 1 Total Rejected: -0-

☐ Magnetic Particle ☐ Wet ☐ Dry ☐ Fluorescent ☐ Visible
☐ Penetrant ☐ Visible ☐ Fluorescent
☐ Thickness
☒ Ultrasonic

QUANTITY	PART NUMBER	DESCRIPTION	RESULTS
1		PLATE: 1¾" x 6¼" x 10¼" HEAT: 801E07370 WHSE: AQBNL MAT.: A516-70	ACCEPTABLE

COMMENTS EQUIPMENT: KRAUTKRAMER USL-38 WITH 1" DIA., 2.25 MHZ, LONGITUDINAL MODE TRANSDUCER.
COUPLANT: EXOSEN #14

INSPECTION PERFORMED BY: J. Rizzio

By Mark Barrington Certification SNT-TC-1A Level II

The recording of false, fictitious or fraudulent statement or entries on this document may be punished as a felony under federal statutes including federal law, Title 18, Chapter 47
The foregoing is expressly limited to findings based upon material, information, and/or specifications furnished by client and excludes any expressed or implied warranties as to the fitness of the material or other process as subjected to examination and/or analysis for any particular purpose or use
This report is considered to be the confidential property of our client. Reproductions and distribution in whole or in part for advertising purposes without our written permission is strictly prohibited

HTL-300

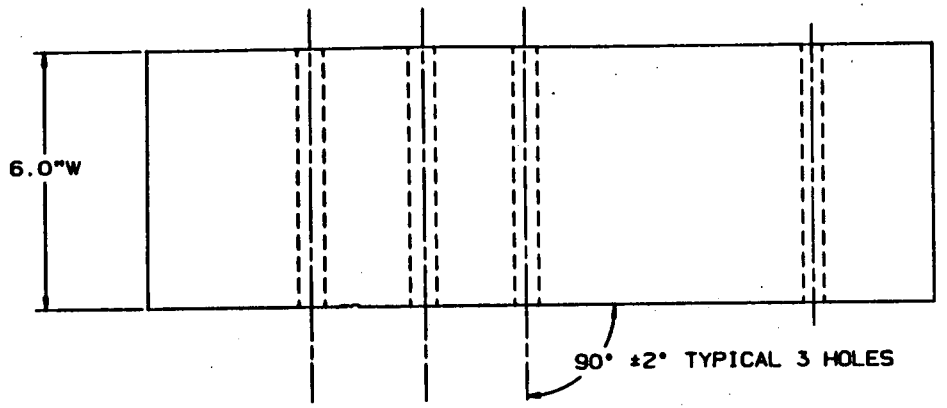

NOTES:
1. DRILL AND REAM 3 HOLES 6.0" DEEP; HOLE DIAMETER TOLERANCE ±0.03".
2. HOLE LOCATION THROUGH THICKNESS TOLERANCE ±0.12".
3. NOTCH DEPTH TOLERANCE +0.005" -0.010".
4. NOTCH WIDTH TOLERANCE 0.18" ±0.06".
5. NOTCH LOCATION TOLERANCE ±0.010".
6. BLOCK THICKNESS TOLERANCE +0.06" -0.00".
7. BLOCK LENGTH AND WIDTH TOLERANCE + 2.0" -0.00".
8. SURFACE FINISH TO BE 63 RMS TO 250 RMS.
9. APPLICABLE TO ASME BOILER AND PRESSURE VESSEL CODE SECTION XI-1983 EDITION THRU SUMMER 1983 ADDENDA.

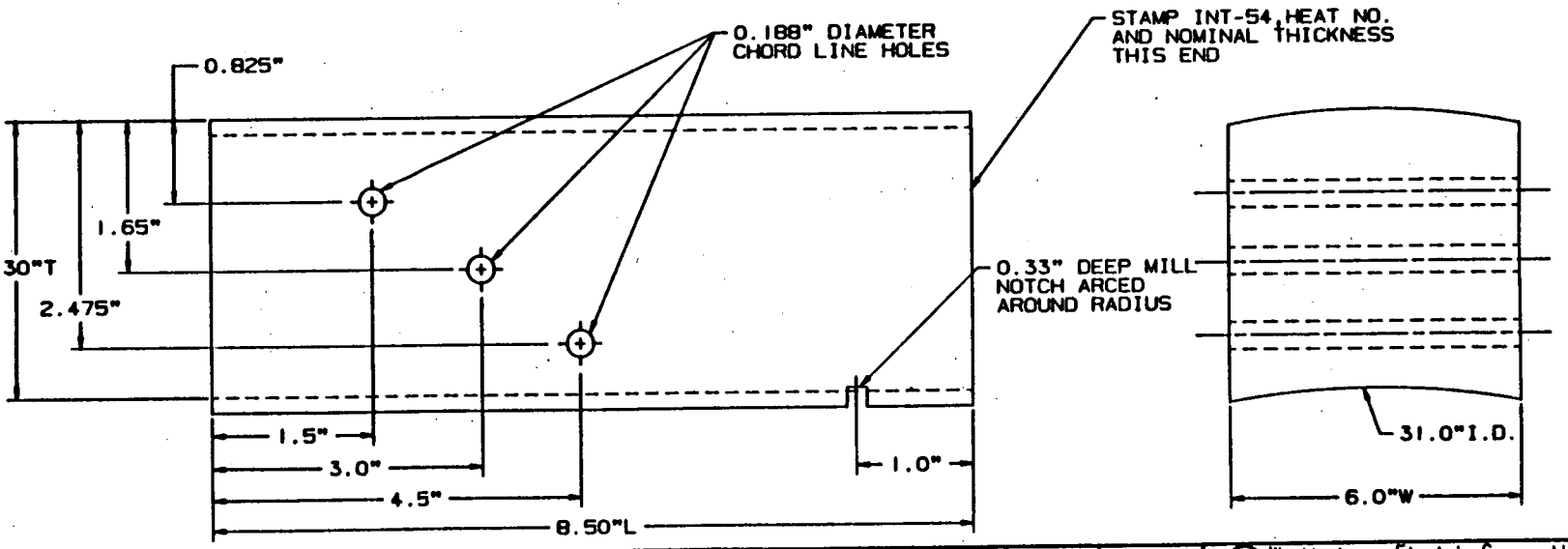

NSD TECHNICAL APPROVAL Phillip C. Burke	DATE 1-2-90	Westinghouse Electric Corporation NSD-INSPECTION SERVICES
LEVEL III APPROVAL	DATE 1-2-90	TITLE CALIBRATION BLOCK INT-54 REACTOR COOLANT PIPE ELBOW 3.30"T X 8.50"L X 6.0"W SA351 GRADE CF8A HEAT NO.: 5160C1
PRODUCT ASSURANCE APPROVAL	DATE 1-2-90	
PRODUCT LINE APPROVAL	DATE 1/2/90	SK. NO. INT-54 REV. 1

Nuclear Services Division

QUALITY RELEASE

QR- 21382 REV. Ø

PURCHASE ORDER	PART NAME	DRAWING & REV.
MA-37205-D	CALIBRATION BLOCKS	SKETCH NOS INT-52, REV 1, INT-53, REV 0, INT-54, REV 1

PAR NO	CHG. NOTICE NO.	P.O. ITEM NO.	PROJ./S.O. NO.	QTY. ON ORDER	QTY. RELEASED
N/A	1 & 2	01, 02 & 03	IN4I-DC459	3 PCS TOTAL	3 PCS TOTAL

SUPPLIER	E. SPEC. & REV.	ORDER
TOOLING SPECIALISTS INC (L&S MACHINE)	N/A	COMPLETE ☒ YES ☐ NO

SERIAL OR IDENTIFICATION NOS.

CALIBRATION BLOCKS IDENTIFIED AS FOLLOWS: INT-52, REV 1; INT-53, REV 0 AND INT-54, REV 1

The equipment shown hereon is released by W Quality Assurance. Shipment may be made subject to authorization by W Purchasing. In the Audit Checklist below, an A indicates acceptability, a C indicates a contingency and a W indicates that W QA has waived the auditing or witnessing of the attribute. All non-applicable items are lined out.

AUDIT CHECKLIST

A	Material Certifications	~~Non-Operating Electrical Tests~~	
~~Heat Treat Records~~		~~Operating Electrical Test~~	
~~RT Film and Records~~		~~Pressure Test~~	
~~PT/MT Records~~		~~Seat Tightness Test~~	
A	Visual	~~Performance Test~~	
A	Dimensional DIMENSIONAL DATA	A	Cleanliness
A	UT Records FOR INT-52 & INT-53 ONLY	A	Packaging
~~Personnel Qualification: Welding, NDT~~		~~Code Form~~	
A	TSI C of C	~~Painting~~	

DEVIATION NOTICES AND REMARKS (ALL DEVIATIONS HAVE BEEN APPROVED BY THE RESPONSIBLE WESTINGHOUSE ENGINEER UNLESS A SPECIFIC EXCEPTION IS STATED.)

THERE ARE NO DEVIATION NOTICES APPLICABLE TO THESE PARTS.

CAL. BLOCKS ARE ACCEPTABLE AND RELEASED FOR SHIPMENT TO NYPA, INDIAN POINT UNIT #3 PER P.O. REQUIREMENTS.

THE SUPPLIER CERTIFIES that for the equipment and material released, all contractual requirements have been met. Approved deviations, if any, are listed above.

SUPPLIER SIGNATURE: Roland Manager DATE: 1-15-90

TITLE

The equipment shown hereon is released by W Quality Assurance. Shipment may be made subject to authorization by W Purchasing.

The equipment supplier has certified that the equipment above meets all requirements of the purchase order, drawings and specifications. Westinghouse has reviewed evidence supporting this release and except as specified above has detected no deviations from such requirements. This release does not waive any rights Westinghouse may have under the purchase order including Westinghouse's right to reject the equipment upon discovery of any such deviations after arrival at destination.

1/15/90

Westinghouse Quality Assurance Representative

NSD 1010 01-89

REQUISITIONER

TOOLING
SPECIALISTS
INCORPORATED

MACHINE TOOL BUILDERS — SPECIAL MACHINING — DIES — ENGINEERING SERVICE

P. O. Box 251, LATROBE, PA. 15650 Phone: (412) 539-2534

CERTIFICATE OF COMPLIANCE

Date: December 27, 1989

Westinghouse Electric Corporation
Nuclear Energy Systems
P.O. Box 355
Pittsburgh, PA 15230

Gentlemen:

This is to certify that the products shipped to you, per the information listed below, comply to the requirements of this order.

All required tests and inspections have been performed.

Documented evidence of compliance supporting this certification is available at our facility for review.

C/N 1 & 2

Westinghouse Purchase Order Number: MA-37205-D NSDN Number: None

TSI Shop Order Number: 51-2108 Westinghouse QR: 21382, Rev 0

Description:

(1) each P.O. Item 001, From W material Manufacture Calibration Block INT-52, Rev 1
(1) each P.O. Item 002, From W material Manufacture Calibration Block INT-53, Rev 0
(1) each P.O. Item 003, From W material Manufacture Calibration Block INT-54, Rev 1

Very truly yours,

Paul M Pittman

Quality Assurance

PMP/sb

L & S Machine Company, Inc.

Donahue Road
R. D. 2, Box 317
Latrobe, PA 15650

INSPECTION PLAN NO.:
REPORT NO.:

Page 1 of

Customer	Customer P.O. No.	L & S W.O. No.	L & S Inspector	Date
WESTINGHOUSE NSD	MA 37205 D	6586	D. Bolling	12-21-89
	Drawing No. INT-54	Rev. Ø	Customer Inspector	Date

Part Name	Group/Item	Number of Pieces	Heat No.
INT-54 CALIBRATION BLOCK	INT-54	This Report 1 Total Order 3	516001

Drawing Dimensions and Tolerances	Char. Ltr.	Ser./Part No. INT-54, REV1	Ser./Part No.	Ser./Part No.	Ser./Part No.	Ser./Part No	Ser./Part No.	Ser./Part No.
6.00 WIDTH		6.035						
8.500 LENGTH		8.690						
NOMINAL THICKNESS		3.291						
31.00 I. D.		AS SUPPLIED						
NOTCH WIDTH		.180						
NOTCH DEPTH		.326						
1.000 NOTCH LOC.		1.00						
.188 DIA. HOLE		.185						
.825 DIM.		.8242						
1.500 DIM.		1.525						
.188 DIA. HOLE		.185						
1.650 DIM.		1.652						
3.000 DIM.		3.002						
.188 DIA HOLE.		.184						
2.475 DIM.		2.475						
4.500 DIM.		4.502						
SURFACE FINISH		Acceptable	(VISUAL)					
ID. NO. STAMPED		Acceptable	(VISUAL)					
HEAT NO. STAMPED		Acceptable	(VISUAL)					
NOMINAL THICKNESS STAMP.		Acceptable	(VISUAL)					
90° TYP. 3 HOLES.		90°						

Comments

MATERIAL TEST REPORT

FOR Westinghouse Electric Company, PWR Systems Div. DATE January 19, 1979

CUSTOMER P.O. NO. 344-CTV-262941-TM

WHI JOB ORDER NO. 3030-A WHI JOB ORDER NO. 1218-E

DESCRIPTION 24" I.D. x 90° Plenum Ell

SERVICE DESIGNATION ASME Code Class 1, Design Pressure = 2485 PSIG @ 650°F

DRAWING NO. 288750 REV. C PC NO. 1

HEAT NO. 5160C-1 SERIAL NO. (if required)

(1) SPAN RCPCCF-05 (2) SPAN 271840-5

EFFECTIVE ASME BOILER AND PRESSURE VESSEL CODE SECTION III YR. 1974 ADDENDA Summer 1976

MATERIAL SPECIFICATION SA 351 REV. 1974 w/Summer 76

MATERIAL GRADE CF8A

FURNACE PROCESS Electric Furnace

HEAT TREATMENT CONDITION Solution Annealed TEMP. 1975°F TIME 5 hrs.

HYDROSTATIC TEST PRESSURE N/A

CHEMICAL ANALYSIS (values in maximum or specific range)

ELEMENT	Carbon	Mang.	Silicon	Sulphur	Phos.	Chrome		
SPECIFICATION	0.08	1.50	2.00	0.040	0.040	18.0-21.0		
ACTUAL	0.045	0.45	1.56	0.009	0.009	20.75		

MECHANICAL TESTS (all values minimum)

	TENSILE KSI	YIELD POINT KSI	ELONGATION IN 2 INCHES	REDUCTION IN AREA	
SPECIFICATION	77	35	35.0		
ACTUAL	89800	42000*	58.0		

WELD REPAIRS (see attached sheet) Procedure WHI 19.100, Rev. B

WELDING MATERIAL IDENTIFICATION 308-16 5/32, 3/16, 1/8 electrodes

LOT IDENTIFICATION NO. 5/32 - 8C27B IDENTIFICATION OF WELD REPAIR See W.R. Report

LOT IDENTIFICATION NO. 3/16 - 7F37B IDENTIFICATION OF WELD REPAIR See W.R. Report

LOT IDENTIFICATION NO. 1/8 - 8B20B IDENTIFICATION OF WELD REPAIR See W.R. Report

POST WELD REPAIR HEAT TREATMENT N/A TEMP. N/A TIME N/A

NDT PROCEDURE RT-8540, Rev. A, [illegible] Proposed PSI, PT-330/430, Rev. E, Appendix A, UT-203-7.23, Rev. A Rev. A [illegible] 28438

[ ] RT [ ] MT [X] PT [X] UT

VISUAL INSPECTION STANDARD (if applicable) WHI-QP-55

[illegible] Tensile Tested at 650°F in accordance with ASTM E-21-70. ASME-III-Table 1-2.2 shows a minimum hot yield strength of 19.8 KSI. See attached metallurgical inspection report.

CERTIFICATION

[illegible] and that the data contained herein is correct and [illegible] in the company.

[illegible] DATE 1/23/79 (3)

MANAGER OF QUALITY ASSURANCE

METALLURGICAL INSPECTION REPORT
NEWPORT NEWS SHIPBUILDING AND DRY DOCK COMPANY
NEWPORT NEWS, VIRGINIA

CAST CRES .505" Dia. Tensile — Yard — 11-21-78

Lab. No.															YS	TS		
														ASME SA-351 Gr. CF8A				
51-0C1	4577-4	1	1	288750	.045	20.75	.45	8.09	.35	.15	1.56	.009	.009		42000	87800	54.0	
					Co .11													
					Tensile Test at 650°F in accordance with ASTM E-21-70 Required by N.N.I.C. J.O. 1218-N										26400	65900	3.0	

Newport News Industrial Corporation J.O. 1218-N (NNS J.O. 5050-A), Westinghouse Electric Company
Customer Dwg. No. 271C390, Sub. 5, Item 1
SPIN RECALE-05
PO. 262941

	Date Cast	X-Ray No.	Pt. No.
1- 31" I.D. x 90° Plenum Ell	4-4-78	NN28438	297

MRC Supervisor, Laboratory Services

J. H. Arthur, Jr.
Section Manager, Laboratory Services

3

P.O. [illegible]
[illegible]
[illegible]
[illegible]

HEAT TREATMENT WORK SHEET

FURNACE NO. 4 | E78-36746-1-1 | DATE 6-14-78

FURNACE RUN NO. M1888 | APPLICABLE PROCEDURE

CASTINGS

MT 8100C1 1 ELBOW S.O. 8058A

MT 8100 2 CASTINGS, 1 SAUCER, 1 FUNNEL, 2 SETS CON TEST BARS MALLEABLE IRON

HOURS TO HEAT TO TEMPERATURE 8 hrs

NOTE: HEAT SO THAT CHART SHOWS READINGS CLOSE TOGETHER NOT OVER 75° APART.

TIME START 6:30 PM

TIME UP 2:30 AM

TIME OFF 7:30 AM

TEMP. TUNE 1175 GAS

HOLDING TIME 5 hrs

NOTE: HOLD READINGS WITHIN 50° F

COOL water quench

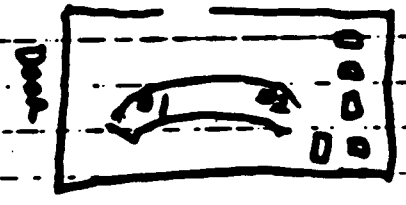

DUE TO COUPLES NO.

OPERATOR

1ST SHIFT Clifton 8234

2ND SHIFT L. Johnson

3RD SHIFT

ANNEALING OVEN REPORT

DATE 6-14-78

NAME OF PARTS	IDENT/ HEAT NO.	NO. PCS.	CHARGE	OIL NO.	ITEM NO.	TYPE MATERIAL	TEMP.	TIME	DIAM	THERMOCOUPLE	POSITION
ELBOW	S160C	1	S050A	288750	1	CF 8A					
							825				
							1975	8 hr	X hr		
NO. GEN. TEST							water quench				

W P.O. 282941
W SPEC SCPCCF-05
BAS. 271C380-5
Heat # S160C-1

OPERATOR (PROCEDURE NO.) O.K. 6-15-78	Report reviewed	F H Jones 6-14-78
W. Pierwka	Report and castings loads agree	F H Jones 6-14-78
LABOR CHARGE	OIL CHARGE	OIL USED NO. OF GALLONS
HEAT CHART NO. N1798	PURCHASE NO. 4	INSPECTOR

7

MATERIAL TEST REPORT
Welding Products Division
PITTSBURGH WAREHOUSE

TELEDYNE McKAY
P.O. Box 1509 • 850 Grantley Road • York, Pa. 17405

TOOLING SPECIALISTS
EAST FAYETTE STREET
LATROBE, PA 15650

Your Order No. -----
Marked For -------

Our Order No. -------
Date Shipped -------

Material Description and Specifications

Item	Weight, lb	Size, in	Classification	Coating
1	--------	3/16	E308-16	AC-DC
2				
3				
4				
5				
6				

Item	Heat No.	Lot No.	Specification
1	306370	2706821	AWS A5.4-78; ASME SFA5.4
2			
3			
4			
5			
6			

Typical Deposit Chemistry

Item	% C	% Mn	% P	% S	% Si	% Cr	% Ni	% Mo	%Cu	%V	%Cb+Ta	Ferrite	
1	.06	1.0	.022	.015	.40	20.2	9.6	.15	.10			7 FN	
2													
3													
4													
5													
6													

Typical Deposit Mechanical Properties

Item	Tensile, psi	Yield, psi	% Elong.	Charpy V-Notch Impact, ft.lb.	
1	86,000	65,000	45		
2					
3					
4					
5					
6					

For Notarization

We hereby certify that the above product has been classified in accordance with the listed specifications and conforms to all applicable requirements thereof.

TELEDYNE McKAY

Joseph [illegible]

292

125

MATERIAL TEST REPOI
Welding Products Division

TELEDYNE McKAY
P.O. Box 1509 • 850 Grantley Road • York, Pa. 17405

1-31-79

Harvey Co.
1055 Garden St.
Greensburg, PA
15601

Your Order No. 6440
Marked For

Our Order No. U 2559
Date Shipped N/A

Material Description and Specifications

Item	Weight, lb.	Size, in	Classification	Coating
1	240	3/16	E 308-16	AC-DC
2	240	3/16	E 309-16	AC-DC
3				
4				
5				
6				

Item	Heat No.	Lot No.	Specification
1	C-3260	2589686	AWS A5.4-69 ASME SFA 5.4
2	19944	2986601	AWS A5.4-69 ASME SFA 5.4
3			
4			
5			
6			

Typical Deposit Chemistry TYPICAL WELD METAL

Item	% C	% Mn	% P	% S	% Si	% Cr	% Ni	% Mo	%Cu	%V	%Cb+Ta	Ferrite
1	.06	1.80	.022	.015	.40	20.2	9.8	.10	.15			7.0 FN
2	.08	1.70	.022	.015	.40	24.2	13.0	.15	.11			7.5 FN
3												
4												
5												
6												

Typical Deposit Mechanical Properties TYPICAL WELD METAL

Item	Tensile, psi	Yield, psi	% Elong.	Charpy V-Notch Impact, ft.lb.
1	86,000	65,000	45	
2	90,000	70,000	35	
3				
4				
5				
6				

For Notarization

gtl

We hereby certify that the above product has been classified in accordance with the listed specifications and conforms to all applicable requirements thereof

TELEDYNE McKAY

GT [illegible]

NEW YORK POWER AUTHORITY
INDIAN POINT NUCLEAR POWER PLANT
UNIT NO. 3
CALIBRATION BLOCKS

INDIAN POINT UNIT NO. 3 DESIGNATION	:	INT-33
COMPONENT/SYSTEM	:	STEAM GENERATOR SECONDARY SIDE
SIZE/SCHEDULE	:	3.5"T X 18.2"L X 6.0"W
MATERIAL	:	SA533 CLASS 1 GRADE B CARBON STEEL
HEAT OR IDENTITY NUMBER	:	D8366-5

ASME SECTION V AND XI 1983 EDITION THROUGH SUMMER 1983 ADDENDA REQUIREMENTS:

1. Section V : T-434
2. Material : SA302 Grade B Carbon Steel
3. Size/Schedule: 3.5"T (Average) x 11.125"L x 6.0"W

WESTINGHOUSE ELECTRIC CORPORATION - NSID - INSPECTION SERVICE DESIGN:

Calibration block was designed to meet intent of ASME Boiler and Pressure Vessel Code Section XI 1974 Edition through Summer 1975 Addenda.

RECOMMENDATION:

Calibration block to meet requirements of Section V and Section XI - 1983 Edition through Summer 1983 Addenda would require material of SA302 Grade B Carbon Steel (although P-Number grouping is equivalent with SA533 Class 1 Grade B Carbon Steel), and as required by Figure T-434 side drilled hole to be 1.5" minimum from edge instead of 0.875", and hole tolerances documented.

NOTES:
1. DRILL AND REAM 6 HOLES 3" MINIMUM DEEP.

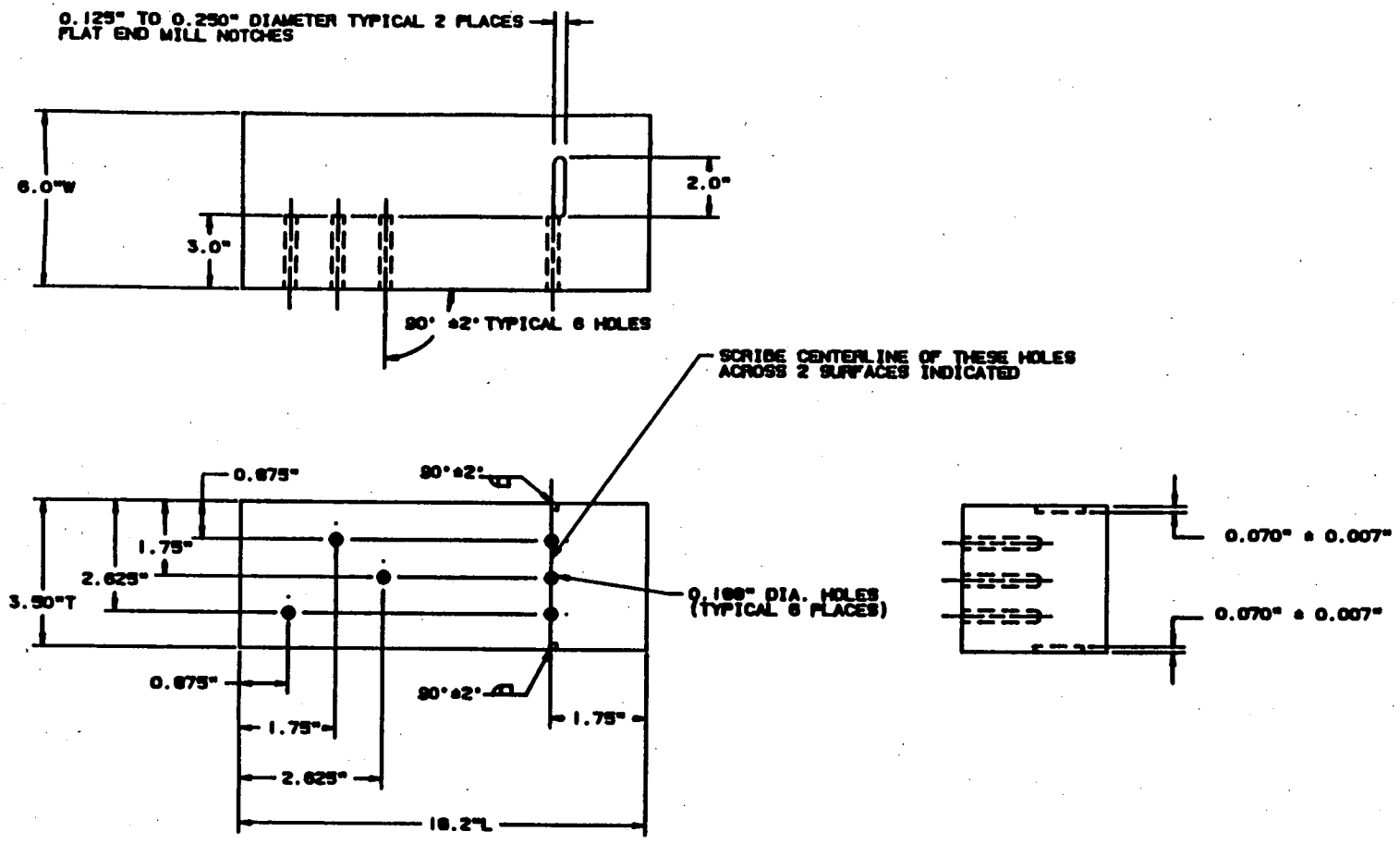

COMPUTER SYSTEM PLANT MODELING

NSSD TECHNICAL APPROVAL Phillip C. Burkes	11-20-86	Westinghouse Electric Corporation PLANT ENGINEERING DIVISION - PITTSBURGH, PA
LEVEL III REVIEW David Kurtz	11-20-86	TITLE CALIBRATION BLOCK INT-33 STEAM GENERATOR SECONDARY SIDE 3.5"T X 18.2"L X 6.0"W SA533 CLASS 1 GRADE B CARBON STEEL HEAT NO.: D8366-5
ENG		
ENG		
MGR		SIZE C DR. NO. REV.

REVISION

NSD PA1010

Nuclear Service Division
QUALITY RELEASE

QR- 1837 REV. O

PURCHASE ORDER	PART NAME	DRAWING & REV.
410855	CALIBRATION BLOCKS	W014 REV 0 / W001 REV 4

PAR NO.	CHG. NOTICE NO.	P.O. ITEM NO.	PROJ./S.O. NO.	QTY. ON ORDER	QTY. RELEASED
0	0	001, 002, 003	VISN-9327/INSN-9327	5	5

SUPPLIER	E. SPEC. & REV.	ORDER
TOOLING SPECIALISTS	N/A	COMPLETE ☑ YES ☐ NO

SERIAL OR IDENTIFICATION NOS.

INT-33, IPP-32, VIR-26, IPP-38, VIR-25

(HT # D8366)

The equipment shown hereon is released by W Quality Assurance. Shipment may be made subject to authorization by W Purchasing. In the Audit Checklist below, an A indicates acceptability, a C indicates a contingency and a W indicates that W QA has waived the auditing or witnessing of the attribute. All non-applicable items are lined out.

AUDIT CHECKLIST

[A] Material Certifications	[ ] ~~Non-Operating Electrical Tests~~
[A] Heat Treat Records	[ ] ~~Operating Electrical Test~~
[ ] ~~RT Film and Records~~	[ ] ~~Pressure Test~~
[ ] ~~PT/MT Records~~	[ ] ~~Seat Tightness Test~~
[A] Visual	[ ] ~~Performance Test~~
[A] Dimensional	[A] Cleanliness
[ ] ~~UT Records~~	[W] Packaging
[A] Personnel Qualification: Welding, ~~NDT~~	[ ] ~~Code Form~~
[ ] ~~[illegible]~~	[ ] ~~Painting~~
[ ] ~~[illegible]~~	[A] C. OF C.

DEVIATION NOTICES AND REMARKS (ALL DEVIATIONS HAVE BEEN APPROVED BY THE RESPONSIBLE WESTINGHOUSE ENGINEER UNLESS A SPECIFIC EXCEPTION IS STATED.)

NSDN # 0149

THE SUPPLIER CERTIFIES that for the equipment and material released, all contractual requirements have been met. Approved deviations, if any, are listed above.

SUPPLIER SIGNATURE DATE

TITLE

The equipment shown hereon is released by Quality Assurance. Shipment may be made subject to authorization by Purchasing.

The equipment supplier has certified that the equipment above meets all requirements of the purchase order, drawings and specifications. Westinghouse has reviewed evidence supporting this release and except as specified above has detected no deviations from such requirements. This release does not waive any rights Westinghouse may have under the purchase order including Westinghouse's right to reject the equipment upon discovery of any such deviations after arrival at destination.

Karl R. Moss 2-1-80

Westinghouse Quality Assurance Representative

SUPPLIER (ATTACH TO SHIPPING PAPERS)

INT-33

Tooling Specialists, Inc.
Certification Letter of Compliance

To: W INES
PO Box 355
Pittsburgh Pa, 15230

Date: 1/31/80

Tooling Specialists, Inc. certifies that all purchase order requirements have been met for the following equipment and material. Any deviations from the order requirements have had Westinghouse NSD approval prior to shipment. Deviation Notice (D/N) numbers applicable are NA (N/A if not applicable).

Westinghouse Purchase Order Number 544-MXK-410855-XN
P.O. Change Notice number(s) 00
Procurement Advisory Release (PAR) number(s) NA

P.O. Item #	Dwg. or Sketch and Rev. #	Base Mat'l & Heat #	Weld Joining Mat'l & Heat #	Cladding Mat'l and Heat #
001 1pc	W014	HT D8366	NA	NA

weld joining procedure used NA
(include revision #)
cladding procedure used NA
(include revision #)
heat treating procedure used NA
(include revision #)

One copy each of the following documents as required by the purchase order are attached to this letter. All (including letter) are included with this shipment.

✓ Westinghouse Quality Release
NA Base material mill test report(s)
NA Weld operator certification
NA Heat treat chart(s)
✓ Inspection Report
NA Weld joining material mill test report
NA Cladding material mill test report
Other

One additional copy each of this letter and the above documents are hereby forwarded to the Westinghouse Buyer.

All records supporting this certification letter are available at Tooling Specialists.

Thomas D Shearer
(signature)

Tooling Specialists, Inc.

INSPECTION REPORT

Page 1 of 1

TOOLING SPECIALISTS, INC.
Latrobe, Pa. 15650
Phone: (412) 539-2534

Dwg. # W014
Revision 0
Item
P. O. # 544-MXK-40855-XN
Work Order # 21730

CUSTOMER: (W) N.E.S.

PART DESCRIPTION: (1) Calibration Block Without Clad

IF OUT OF TOLERANCE, PLACE X IN BOX TO RIGHT OF DIMENSION.

DRAWING DIMENSIONS	Part No. ENT-33	X	Part No.	X	Part No.	X	Part No.	X	Part No.	X	Part No.
"T"	3.539										
"T/4" (Top)	Ranges .884-.890										
T/2 (Bottom)	1.772										
T/4 (Bottom)	Ranges .883-.888										
T/4 (Left Side)	.885										
T/2 (Left Side)	1.768										
3/4 T	2.660										
5.2 T	18.205										
T or 6" min	6.053										
T/2 (Right Side)	1.770										
3" (Top)	3.005										
3" (Bottom)	3.005										
Drilled & Reamed 3/16 Holes	.1875										
6 Holes 3" Deep (Top)	Ranges 3"-3.04"										
1/8-1/4 Flat end mill notch	1/4										
2% T Deep (Top)	.071										
2" Long (Top)	1.992										
1/8-1/4 Flat end mill notch (Bottom)	1/4										
2% T Deep (Bottom)	.071										
2" Long (Bottom	1.998										
Scribe Notches + Holes	OK										

INSPECTOR: Kevin J. Jones 1-15-80

RECEIVING INSPECTOR:

300

PURCHASER:

3 • WESTINGHOUSE ELEC. CORP.
NES DIVISION
BOX 355
PITTSBURGH, PA.
15230

LUKENS STEEL COMPANY

COATESVILLE, PA. 19320

TEST CERTIFICATE

MILL ORDER NO.	CUSTOMER P.O.	
68125 1	544-MXK-401347 -XN	92879 DG

DATE: 10/02/79 FILE NO. 7-25-99

CONSIGNEE:
TOOLING SPECIALITIES
P.O. BOX 251
ATTN. TOM SHEARER
LATROBE, PA. 15650

THIS MATERIAL HAS BEEN MANUFACTURED AND TESTED IN ACCORDANCE WITH PURCHASE ORDER REQUIREMENTS AND SPECIFICATION(S):

SA-533 CL. 1 TYPE-B ASME CODE SECT. II & III SUB NB 1974 EDITION N-1160 8/4/81

BEND TEST HOMOGENEITY TEST

CHEMICAL ANALYSIS

MELT NO.	C	MN	P	S	CU	SI	NI	CR	MO	V	TI	AL	B		Basic Proc.
D8366	.18	1.29	.010	.005		.22	.65		.56				VIP Steel		Elec.

PHYSICAL PROPERTIES

MELT NO.	SLAB. NO.	YIELD PSI X100	TENSILE PSI X100	% ELONG. IN 2	% R.A.	BHN	IMPACTS				DESCRIPTION
D8366	5	705 724	900 905	22 21							10- 10 X 14 X 40

PLATES AND TESTS HEATED TO 1625 F./1675 F., HELD 1/2 HR. PER INCH MIN. AND WATER QUENCHED, RE-HEATED TO 1625 F./1675 F., HELD 1/2 HR. PER INCH MIN. AND WATER QUENCHED, THEN TEMPERED 1220 F., HELD 1/2 HR. PER INCH MIN. AND WATER QUENCHED.

PLATES STRESS RELIEVED BY HEATING TO 1025 F./1075 F., HELD 1/2 HR. PER INCH MIN. AND AIR COOLED.

REFERENCE TEMPERATURE WAS NOT PERFORMED BY LUKENS'.

We hereby certify the above information is correct.

SUPERVISOR-TESTING H. F. Kline

NEW YORK POWER AUTHORITY
INDIAN POINT NUCLEAR POWER PLANT
UNIT NO. 3
CALIBRATION BLOCKS

INDIAN POINT UNIT NO. 3 DESIGNATION	:	INT-34
COMPONENT/SYSTEM	:	RESIDUAL HEAT EXCHANGERS 31 & 32
SIZE/SCHEDULE	:	.750"T X 9.0"L X 4.0"W
MATERIAL	:	SA240 TP304 STAINLESS STEEL
HEAT OR IDENTITY NUMBER	:	30106

ASME SECTION V AND XI 1983 EDITION THROUGH SUMMER 1983 ADDENDA REQUIREMENTS:

1. Section V : T-110 and T-548
2. Section XI : Article III-1100, Supplement 7 and IMA-2250
3. Material : SA240 TP304 Stainless Steel
4. Size/Schedule: 34.5" - .750"T

WESTINGHOUSE ELECTRIC CORPORATION - NSID - INSPECTION SERVICE DESIGN:

Calibration block was designed to meet intent of ASME Boiler and Pressure Vessel Code Section XI 1974 Edition through Summer 1975 Addenda.

RECOMMENDATION:

Calibration block design follows the guidelines of Section V and Section XI - 1983 Edition through Summer 1983 Addenda for Austenitic Vessels. Calibration blocks for "T-546 Welds in Wrought and Cast Ferritic Product Forms, Excluding Pipe and Figure T-546.1" could be used as a guide for developing a new calibration block for the Residual Heat Exchanger. However, thinness of material would make difficult placement of 1/4T, 1/2T and 3/4T-3/32" diameter holes and 2% T notch would exceed the normal 10% T notch for piping.

NOTES:
1. 4.0" LONG X 0.125" FLAT END MILL NOTCHES 10% "T" DEEP
2. DRILL AND REAM HOLE 4.0" LONG AND 0.094" IN DIAMETER

TOLERANCES:
3. NOTCH DEPTH + 0.005" - 0.010"
4. NOTCH WIDTH + 0.25" - 0.00"
5. HOLE LOCATION TO BE BASED ON ACTUAL "T" ± 0.016"
6. SIDE DRILLED HOLE DIAMETER ± 0.03"
7. LENGTH OF BLOCK + 2.0" - 0.25"

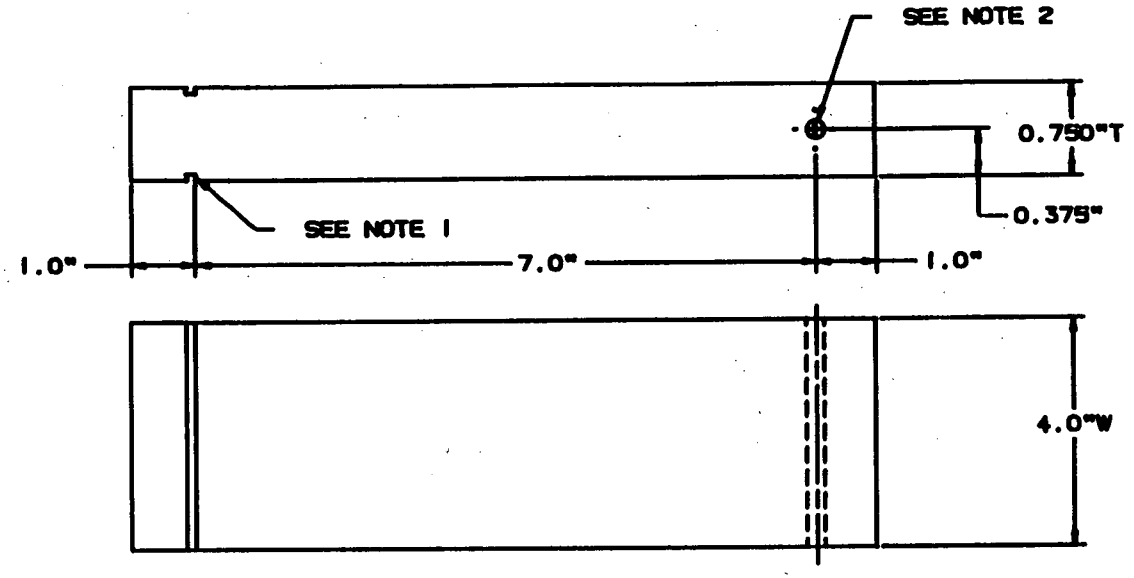

COMPUTER SYSTEM PLANT MODELING

NSSS TECHNICAL APPROVAL: Phillip C. Bukas	11-20-86	Westinghouse Electric Corporation, PLANT ENGINEERING DIVISION - PITTSBURGH, PA
LEVEL III REVIEW: David Hendy	11-20-86	TITLE: CALIBRATION BLOCK INT-34 RESIDUAL HEAT EXCHANGERS 31 & 32 .750"T X 9.0"L X 4.0"W SA240 TP304 STAINLESS STEEL HEAT NO.: 30106
		C — DWG. NO. — REV.

NSD PA1010

Nuclear Service Division
QUALITY RELEASE

QR- 1623 REV. 0

PURCHASE ORDER	PART NAME	DRAWING & REV.
294103	Calibration Blocks	W003 Rev3, W004 Rev. W005 Rev5, W006 Rev6, W007 Rev.

PAR NO.	CHG. NOTICE NO.	P.O. ITEM NO.	PROJ./S.O. NO.	QTY. ON ORDER	QTY. RELEASED
0	1	1 thru 6, 8 thru 15	WISN-9327/IPBN-9327	65	59

SUPPLIER	E. SPEC. & REV.	ORDER
Tooling Specialists	N/A	COMPLETE ☐ YES ☑ NO

SERIAL OR IDENTIFICATION NOS.

HT#: 30106 (6 pieces), NNN7B (A thru F), N7212 (A & B), 182 (A thru H), 8051726 (A thru H), M9948 (A thru D), 2626-8-1 (A thru E), 245865 (A thru H), 534982 (A thru F), 2633-13-1 (A thru F).

The equipment shown hereon is released by W Quality Assurance. Shipment may be made subject to authorization by W Purchasing. In the Audit Checklist below, an A indicates acceptability, a C indicates a contingency and a W indicates that W QA has waived the auditing or witnessing of the attribute. All non-applicable items are lined out.

AUDIT CHECKLIST

[A]	Material Certifications	~~[ ]~~	~~Non-Operating Electrical Tests~~
~~[ ]~~	~~Heat Treat Records~~	~~[ ]~~	~~Operating Electrical Test~~
~~[ ]~~	~~RT Film and Records~~	~~[ ]~~	~~Pressure Test~~
~~[ ]~~	~~RT/MT Records~~	~~[ ]~~	~~Seat Tightness Test~~
[A]	Visual	~~[ ]~~	~~Performance Test~~
[A]	Dimensional	[A]	Cleanliness
~~[ ]~~	~~UT Records~~	[W]	Packaging
~~[ ]~~	~~Personnel Qualification: Welding, NDT~~	~~[ ]~~	~~Code Form~~
~~[ ]~~		~~[ ]~~	~~Painting~~
~~[ ]~~		[A]	C. of C.

DEVIATION NOTICES AND REMARKS (ALL DEVIATIONS HAVE BEEN APPROVED BY THE RESPONSIBLE WESTINGHOUSE ENGINEER UNLESS A SPECIFIC EXCEPTION IS STATED.)

Six of the above blocks to be shipped to IPP.
S/N's: IPP-8, IPP-11, IPP-27, IPP-34, IPP-35, IPP-36.

THE SUPPLIER CERTIFIES that for the equipment and material released, all contractual requirements have been met. Approved deviations, if any, are listed above.

SUPPLIER SIGNATURE: [illegible] DATE: 6/29/79
TITLE:

The equipment shown hereon is released by Quality Assurance. Shipment may be made subject to authorization by Purchasing.

The equipment supplier has certified that the equipment above meets all requirements of the purchase order, drawings and specifications. Westinghouse has reviewed evidence supporting this release and except as specified above has detected no deviations from such requirements. This release does not waive any rights Westinghouse may have under the purchase order including Westinghouse's right to reject the equipment upon discovery of any such deviations after arrival at destination.

K.R. Moran 6-29-79
Westinghouse Quality Assurance Representative

TOOLING SPECIALISTS INCORPORATED

MACHINE TOOL BUILDERS — SPECIAL MACHINING — DIES — ENGINEERING SERVICE

P. O. Box 251, Latrobe, Pa. 15650 Phone: (412) 539-2534

LETTER OF COMPLIANCE

June 29, 1979

This is a statement of compliance to the requirements of Westinghouse Purchase Order Number 544-MXK-294103-RN.

All required processes, tests, and inspections have been performed. Inspection data sheets, heat treat charts, weld wire and material certifications are attached as required by the Purchase Order.

A listing of Purchase Order items in this shipment is attached.

Documented evidence of compliance supporting this certification is available at Tooling Specialists.

Sincerely yours,

Thomas D. Shearer

Thomas D. Shearer
Manager Special Products

TDS:keo

2" Sch 160 Material has not been received yet

INSPECTION REPORT

Page _____ of _____

TOOLING SPECIALISTS, INC.
Latrobe, Pa. 15650
Phone: (412) 539-2534

Dwg. #

Revision | Item

P. O. #

Work Order # 21-235

CUSTOMER:

PART DESCRIPTION:
(6) FLAT CALIBRATION BLOCKS HT 30106

IF OUT OF TOLERANCE, PLACE X IN BOX TO RIGHT OF DIMENSION.

DRAWING DIMENSIONS	Part No. .253 X	Part No. .314 X	Part No. A-627 X	Part No. B-627 X	Part No. .751 X	Part No. .877 X
T-Dim.	.253	.314	A-627	627	.751	.877
Length	9.000	9.000	9.000	9.000	9.000	13.000
dia of holes	.096	.095	.094	.095	.096	.095 .096
Notch width	.129	.130	.128	.128	.129	.131
Notch depth	.026	.032	.062	.063	.074	.084
½T hole (Tapped Through hole)	.002	.004	.003	.005	.002	.004 .001
Edge of pc To Notch	1.002	1.001	1.003	1.002	1.002	.999
Width	4.008	4.008	4.008	4.008	4.008	4.008

INSPECTOR: Thomas Thomas

RECEIVING INSPECTOR:

JESSOP STEEL COMPANY
WASHINGTON, PENNSYLVANIA

CERTIFICATE OF TEST

DATE October 29, 1978

TO . Williams & Col., Inc.
. 7640 Reinhold Drive
. Cincinnati, Ohio 45237
Attn: Q. c. Clerk.

SHIPPED TO

GENTLEMEN: We shipped to you via Ace Doran 10/30/78 Shipping Memo # 54055 Material Listed Below:

Jessop Type 304 S/SHRAP Spec 06-200 Dated 5/2/77, PDS 10710BA, ASTM A-240-7
ASME SA-240-S78,

HEAT NO.	YOUR ORDER NO.	OUR ORDER NO.	SIZE	QUANTITY	
30106	52311-99-S-03-06	S-283350	1.000 x 72 x 281	1 Pcs.	5994
"	"	"	1.000 x 72 x 278	1 Pc.	5930

HEAT NO.	YIELD STRENGTH LBS. PER SQ. IN.	TENSILE STRENGTH LBS. PER SQ. IN.	ELONG. % IN 2"	RED. OF AREA	HARDNESS	BEND	CORROSION	INT. CORROSION	GRAIN SIZE
30106	39,800	87,800	54	70	BHN167	ok		ok	

Magnetic Permeability less than 1.02.

CHEMICAL COMPOSITION (WHEN CALLED FOR BY SPECIFICATION)

HEAT NO.	C.	MN.	P.	S.	SI.	NI.	CR.	MO.	CO.	TI.	CU.	CB/TA.	Nit
30106	.056	1.79	.020	.010	.54	8.80	18.80	.60	.16		.38		.077

DECLARED TO UNDER OATH BEFORE ME

THIS _____ DAY OF _____ 19___

JESSOP STEEL COMPANY

BY _____ AUTHORIZED SIGNATURE

NOV 3 '78

THIS MATERIAL HAS BEEN PRODUCED TO, AND CONFORMS TO APPLIED SPECIFICATIONS.

367

NEW YORK POWER AUTHORITY
INDIAN POINT NUCLEAR POWER PLANT
UNIT NO. 3
CALIBRATION BLOCKS

INDIAN POINT UNIT NO. 3 DESIGNATION	:	INT-35
COMPONENT/SYSTEM	:	NON REGENERATIVE LETDOWN HEAT EXCHANGER
SIZE/SCHEDULE	:	.625"T X 9.0"L X 4.0"W
MATERIAL	:	SA240 TP304 STAINLESS STEEL
HEAT OR IDENTITY NUMBER	:	30106

ASME SECTION V AND XI 1983 EDITION THROUGH SUMMER 1983 ADDENDA REQUIREMENTS:

1. Section V : T-110 and T-548
2. Section XI : Article III-1100, Supplement 7 and IMA-2250
3. Material : SA240 TP304 Stainless Steel
4. Size/Schedule: 22" - .625"T

WESTINGHOUSE ELECTRIC CORPORATION - NSID - INSPECTION SERVICE DESIGN:

Calibration block was designed to meet intent of ASME Boiler and Pressure Vessel Code Section XI 1974 Edition through Summer 1975 Addenda.

RECOMMENDATION:

Calibration block design follows the guidelines of Section V and Section XI - 1983 Edition through Summer 1983 Addenda for Austenitic Vessels. Calibration blocks for "T-546 Welds in Wrought and Cast Ferritic Product Forms, Excluding Pipe and Figure T-546.1" could be used as a guide for developing a new calibration block for the New Regenerative Letdown Heat Exchanger. However, thinness of material would make difficult placement of 1/4T, 1/2T and 3/4T-3/32" diameter holes and 2% T notch would exceed the normal 10% T notch for piping.

NOTES:
1. 4.0" LONG X 0.125" FLAT END MILL NOTCHES 10% "T" DEEP
2. DRILL AND REAM HOLE 4.0" LONG AND 0.094" IN DIAMETER

TOLERANCES:
3. NOTCH DEPTH +0.005" -0.010"
4. NOTCH WIDTH + 0.25" - 0.00"
5. HOLE LOCATION TO BE BASED ON ACTUAL "T" ± 0.016"
6. SIDE DRILLED HOLE DIAMETER ± 0.03"
7. LENGTH OF BLOCK + 2.0" - 0.25"

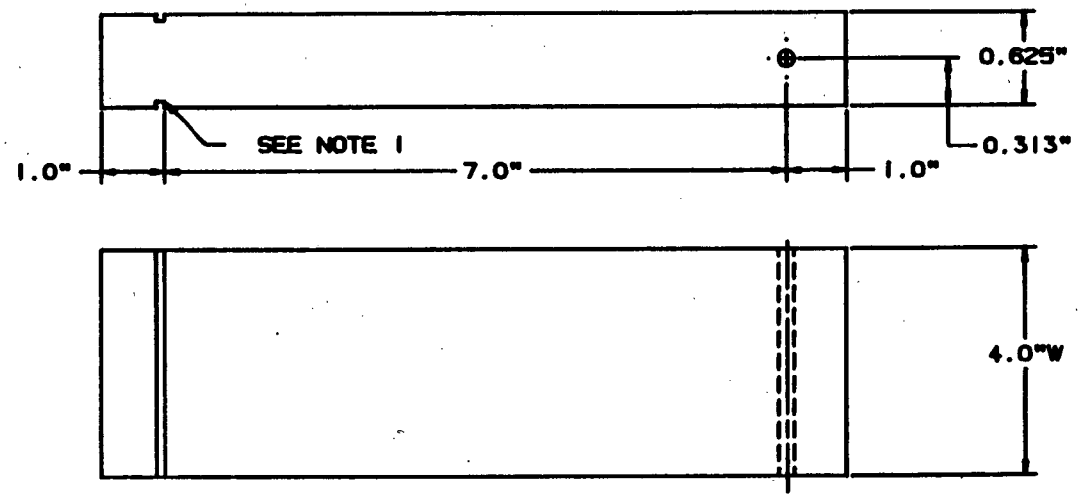

COMPUTER SYSTEM PLANT MODELING

NEED TECHNICAL APPROVAL Phillip C. Burkes	11-20-86	Westinghouse Electric Corporation PLANT ENGINEERING DIVISION - PITTSBURGH, PA
LEVEL III REVIEW David Kunkel	11-20-86	TITLE CALIBRATION BLOCK INT-35 NON REGENERATIVE LETDOWN HEAT EXCHANGER .625"T X 8.0"L X 4.0"W-A SA240 TP304 STAINLESS STEEL HEAT NO.: 30106
ENG		
ENG		
MGR		SIZE C DR. NO. REV.

REVISION

NSD PA1010

Nuclear Service Division
QUALITY RELEASE

QR- 1623 REV. 0

PURCHASE ORDER	PART NAME	DRAWING & REV.
294103	Calibration Blocks	W003 Rev 3, W004 Rev W005 Rev 5, W006 Rev 6, W007 Rev

PAR NO.	CHG. NOTICE NO.	P.O. ITEM NO.	PROJ./S.O. NO.	QTY. ON ORDER	QTY. RELEASED
0	1	1 thru 6, 8 thru 15	VISN-9327/IPBN-9327	65	59

SUPPLIER	E. SPEC. & REV.	ORDER
Tooling Specialists	N/A	COMPLETE ☐ YES ☑ NO

SERIAL OR IDENTIFICATION NOS.

MT #: 30106 (6 pieces), NNN7B (A thru F), N7212 (A & B), 182 (A thru H), 8051726 (A thru H), M9948 (A thru D), 2626-8-1 (A thru E), 245865 (A thru H), 534982 (A thru F), 2633-13-1 (A thru F).

The equipment shown hereon is released by W Quality Assurance. Shipment may be made subject to authorization by W Purchasing. In the Audit Checklist below, an A indicates acceptability, a C indicates a contingency and a W indicates that W QA has waived the auditing or witnessing of the attribute. All non-applicable items are lined out.

AUDIT CHECKLIST

A	Material Certifications	~~Non-Operating Electrical Tests~~	
~~Heat Treat Records~~		~~Operating Electrical Test~~	
~~RT Film and Records~~		~~Pressure Test~~	
~~RT/MT Records~~		~~Seat Tightness Test~~	
A	Visual	~~Performance Test~~	
A	Dimensional	A	Cleanliness
~~UT Records~~		W	Packaging
~~Personnel Qualification: Welding, NDT~~		~~Code Form~~	
		~~Painting~~	
		A	C. of C.

DEVIATION NOTICES AND REMARKS (ALL DEVIATIONS HAVE BEEN APPROVED BY THE RESPONSIBLE WESTINGHOUSE ENGINEER UNLESS A SPECIFIC EXCEPTION IS STATED.)

Six of the above blocks to be shipped to IPP.
S/N's: IPP-8, IPP-11, IPP-27, IPP-34, IPP-35, IPP-36.

THE SUPPLIER CERTIFIES that for the equipment and material released, all contractual requirements have been met. Approved deviations, if any, are listed above.

SUPPLIER SIGNATURE: Thomas Shram DATE: 6/29/79
TITLE:

The equipment shown hereon is released by Quality Assurance. Shipment may be made subject to authorization by Purchasing.

The equipment supplier has certified that the equipment above meets all requirements of the purchase order, drawings and specifications. Westinghouse has reviewed evidence supporting this release and except as specified above has detected no deviations from such requirements. This release does not waive any rights Westinghouse may have under the purchase order including Westinghouse's right to reject the equipment upon discovery of any such deviations after arrival at destination.

K.R. Moore 6-29-79
Westinghouse Quality Assurance Representative

TOOLING
SPECIALISTS
INCORPORATED

MACHINE TOOL BUILDERS — SPECIAL MACHINING — DIES — ENGINEERING SERVICE

P. O. Box 251, Latrobe, Pa. 15650 Phone: (412) 539-2534

LETTER OF COMPLIANCE

June 29, 1979

This is a statement of compliance to the requirements of Westinghouse Purchase Order Number 544-MXK-294103-RN.

All required processes, tests, and inspections have been performed. Inspection data sheets, heat treat charts, weld wire and material certifications are attached as required by the Purchase Order.

A listing of Purchase Order items in this shipment is attached.

Documented evidence of compliance supporting this certification is available at Tooling Specialists.

Sincerely yours,

Thomas D. Shearer

Thomas D. Shearer
Manager Special Products

TDS:keo

2" Sch 160 Material has not been received yet

INSPECTION REPORT

Page _____ of _____

TOOLING SPECIALISTS, INC.
Latrobe, Pa. 15650
Phone: (412) 539-2534

Dwg. # | Revision | Item

P. O. # | Work Order # 21-235

CUSTOMER:

PART DESCRIPTION:
(6) FLAT CALIBRATION BLOCKS HT 30106

IF OUT OF TOLERANCE, PLACE X IN BOX TO RIGHT OF DIMENSION.

DRAWING DIMENSIONS	Part No. .253 X	Part No. .314 X	Part No. A-627 X	Part No. B-627 X	Part No. .751 X	Part No. .877 X
T-Dim.	.253	.314	A-627	627	.751	.877
Length	9.000	9.000	9.000	9.000	9.000	13.000
dia. of holes	.096	.095	.094	.095	.096	.095 / .096
Notch width	.129	.130	.128	.128	.129	.131
Notch depth	.026	.032	.062	.063	.074	.084
½T hole (Taper Thru hole)	.002	.004	.003	.005	.002	.004 / .001
Edge of pc To Notch	1.002	1.001	1.003	1.002	1.002	.999
Width	4.008	4.008	4.008	4.008	4.008	4.008

INSPECTOR: Thomas Thomas

RECEIVING INSPECTOR:

JESSOP STEEL COMPANY
WASHINGTON, PENNSYLVANIA

CERTIFICATE OF TEST

DATE October 29, 1978

TO Williams & Col., Inc.
7640 Reinhold Drive
Cincinnati, Ohio 45237
Attn: Q. c. Clerk.

SHIPPED TO

GENTLEMEN: WE SHIPPED TO YOU VIA Ace Doran 10/30/78 SHIPPING MEMO # 54055 MATERIAL LISTED BELOW:

Jessop Type 304 S/SHRAP Spec 06-200 Dated 5/2/77, PDS 10710BA, ASTM A-240-7
ASME SA-240-S78,

HEAT NO.	YOUR ORDER NO.	OUR ORDER NO.	SIZE	QUANTITY	
30106	52311-99-S-03-06	S-283350	1.000 x 72 x 281	1 Pcs.	5994
"	"	"	1.000 x 72 x 278	1 Pc.	5930

HEAT NO.	YIELD STRENGTH LBS. PER SQ. IN.	TENSILE STRENGTH LBS. PER SQ. IN.	ELONG. % IN 2"	RED. OF AREA	HARDNESS	BEND	CORROSION	INT. CORROSION	GRAIN SIZE
30106	39,800	87,800	54	70	BHN167	ok		ok	

Magnetic Permeability less than 1.02.

CHEMICAL COMPOSITION (WHEN CALLED FOR BY SPECIFICATION)

HEAT NO.	C.	MN.	P.	S.	SI.	NI.	CR.	MO.	CO.	TI.	CU.	CB/TA.	Nit
30106	.056	1.79	.020	.010	.54	8.80	18.80	.60	.16		.38		.077

DECLARED TO UNDER OATH BEFORE ME

THIS _____ DAY OF _____ 19____

JESSOP STEEL COMPANY

BY _____ AUTHORIZED SIGNATURE

Q.A. NOV 3 '78 16

MATERIAL HAS BEEN PRODUCED TO, AND CONFORMS TO APPLIED SPECIFICATIONS.

3-4

NEW YORK POWER AUTHORITY
INDIAN POINT NUCLEAR POWER PLANT
UNIT NO. 3
CALIBRATION BLOCKS

INDIAN POINT UNIT NO. 3 DESIGNATION	:	INT-36
COMPONENT/SYSTEM	:	VOLUME CONTROL TANK
SIZE/SCHEDULE	:	.250"T X 9.0"L X 4.0"W
MATERIAL	:	SA240 TP304 STAINLESS STEEL
HEAT OR IDENTITY NUMBER	:	30106

ASME SECTION V AND XI 1983 EDITION THROUGH SUMMER 1983 ADDENDA REQUIREMENTS:

1. Section V : T-110 and T-548
2. Section XI : Article III-1100, Supplement 7 and IMA-2250
3. Material : SA240 TP304 Stainless Steel
4. Size/Schedule: 90.5" - .250"T

WESTINGHOUSE ELECTRIC CORPORATION - NSID - INSPECTION SERVICE DESIGN:

Calibration block was designed to meet intent of ASME Boiler and Pressure Vessel Code Section XI 1974 Edition through Summer 1975 Addenda.

RECOMMENDATION:

Calibration block design follows the guidelines of Section V and Section XI - 1983 Edition through Summer 1983 Addenda for Austenitic Vessels. Calibration blocks for "T-546 Welds in Wrought and Cast Ferritic Product Forms, Excluding Pipe and Figure T-546.1" could be used as a guideline for developing a new calibration block for the Volume Control Tank. However, thinness of material would make difficult placement of 1/4T, 1/2T and 3/4T-3/32" diameter holes and 2% T notch would exceed the normal 10% T notch for piping.

NOTES:
1. 4.0" LONG X 0.125" FLAT END MILL NOTCHES 10% "T" DEEP
2. DRILL AND REAM HOLE 4.0" LONG AND 0.094" IN DIAMETER

TOLERANCES:
3. NOTCH DEPTH + 0.005" - 0.010"
4. NOTCH WIDTH + 0.25" - 0.00"
5. HOLE LOCATION TO BE BASED ON ACTUAL "T" ± 0.016"
6. SIDE DRILLED HOLE DIAMETER ± 0.03"
7. LENGTH OF BLOCK + 2.0" - 0.25"

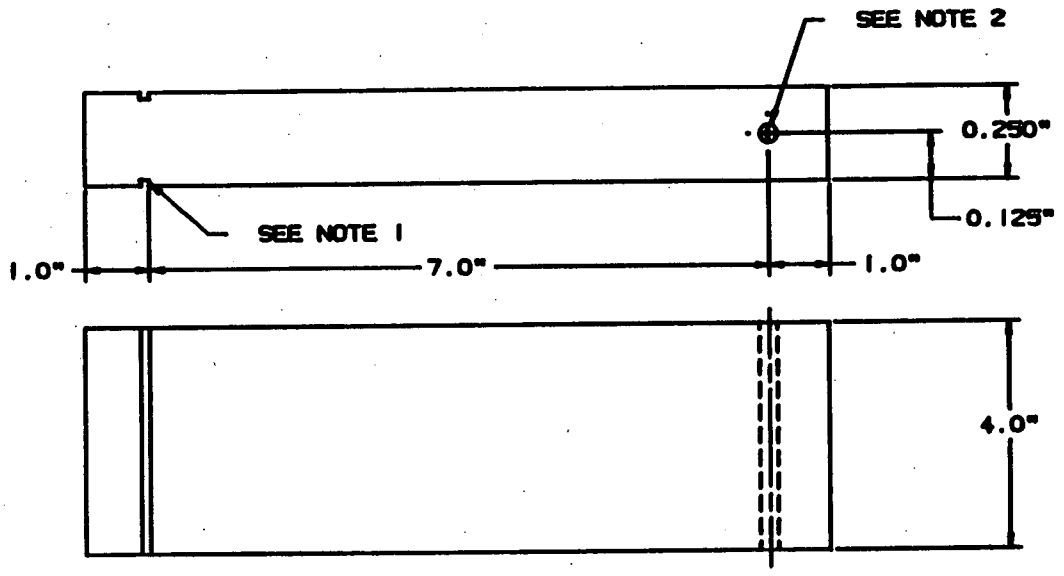

COMPUTER SYSTEM PLANT MODELING

MGR TECHNICAL APPROVAL Phillip C. Burkew	11-20-86	Westinghouse Electric Corporation PLANT ENGINEERING DIVISION - PITTSBURGH, PA
LEVEL III REVIEW David Kendy	11-20-86	TITLE CALIBRATION BLOCK INT-36 VOLUME CONTROL TANK .250"T X 9.0"L X 4.0"W SA240 TP304 STAINLESS STEEL HEAT NO.: 30108
MGR		
MGR		
MGR		C DWG. NO. REV.

REVISION

NSD PA1010

Nuclear Service Division
QUALITY RELEASE

QR- 1623 REV. 0

PURCHASE ORDER	PART NAME	DRAWING & REV.
294103	Calibration Blocks	W003 Rev 3, W004 Rev. W005 Rev 5, W006 Rev 6, W007 Rev.

PAR NO.	CHG. NOTICE NO.	P.O. ITEM NO.	PROJ./S.O. NO.	QTY. ON ORDER	QTY. RELEASED
0	1	3 thru 6, 8 thru 15	VTSN-9327/TPBN-9327	65	59

SUPPLIER	E. SPEC. & REV.	ORDER
Tooling Specialists	N/A	COMPLETE ☐ YES ☑ NO

SERIAL OR IDENTIFICATION NOS.

HT#: 30106 (6 pieces), NNN7B (A thru F), N7212 (A & B), 182 (A thru H, 8051726 (A thru H), M9948 (A thru D), 2626-8-1 (A thru E), 245865 (A thru H), 534982 (A thru F), 2633-13-1 (A thru F).

The equipment shown hereon is released by W Quality Assurance. Shipment may be made subject to authorization by W Purchasing. In the Audit Checklist below, an A indicates acceptability, a C indicates a contingency and a W indicates that W QA has waived the auditing or witnessing of the attribute. All non-applicable items are lined out.

AUDIT CHECKLIST

[A]	Material Certifications	~~[ ]~~	~~Non-Operating Electrical Tests~~
~~[ ]~~	~~Heat Treat Records~~	~~[ ]~~	~~Operating Electrical Test~~
~~[ ]~~	~~RT Film and Records~~	~~[ ]~~	~~Pressure Test~~
~~[ ]~~	~~RT/MT Records~~	~~[ ]~~	~~Seat Tightness Test~~
[A]	Visual	~~[ ]~~	~~Performance Test~~
[A]	Dimensional	[A]	Cleanliness
~~[ ]~~	~~UT Records~~	[W]	Packaging
~~[ ]~~	~~Personnel Qualification: Welding, NDT~~	~~[ ]~~	~~Code Form~~
~~[ ]~~		~~[ ]~~	~~Painting~~
~~[ ]~~		[A]	C. of C.

DEVIATION NOTICES AND REMARKS (ALL DEVIATIONS HAVE BEEN APPROVED BY THE RESPONSIBLE WESTINGHOUSE ENGINEER UNLESS A SPECIFIC EXCEPTION IS STATED.)

Six of the above blocks to be shipped to IPP.
S/N's: IPP-8, IPP-11, IPP-27, IPP-34, IPP-35, IPP-36.

THE SUPPLIER CERTIFIES that for the equipment and material released, all contractual requirements have been met. Approved deviations, if any, are listed above.

SUPPLIER SIGNATURE: [illegible] DATE: 6/29/79
TITLE:

The equipment shown hereon is released by Quality Assurance. Shipment may be made subject to authorization by Purchasing.

The equipment supplier has certified that the equipment above meets all requirements of the purchase order, drawings and specifications. Westinghouse has reviewed evidence supporting this release and except as specified above has detected no deviations from such requirements. This release does not waive any rights Westinghouse may have under the purchase order including Westinghouse's right to reject the equipment upon discovery of any such deviations after arrival at destination.

K.R. Moore 6-29-79
Westinghouse Quality Assurance Representative

TOOLING
SPECIALISTS
INCORPORATED

MACHINE TOOL BUILDERS — SPECIAL MACHINING — DIES — ENGINEERING SERVICE

P. O. BOX 251, LATROBE, PA. 15650 Phone: (412) 539-2534

LETTER OF COMPLIANCE

June 29, 1979

This is a statement of compliance to the requirements of Westinghouse Purchase Order Number 544-MXK-294103-RN.

All required processes, tests, and inspections have been performed. Inspection data sheets, heat treat charts, weld wire and material certifications are attached as required by the Purchase Order.

A listing of Purchase Order items in this shipment is attached.

Documented evidence of compliance supporting this certification is available at Tooling Specialists.

Sincerely yours,

Thomas D. Shearer

Thomas D. Shearer
Manager Special Products

TDS:keo

2" Sch 160 Material has not been received yet

316

INSPECTION REPORT

Page _____ of _____

TOOLING SPECIALISTS, INC.
Latrobe, Pa. 15650
Phone: (412) 539-2534

Dwg. #

Revision | Item

P. O. #

Work Order # 21-235

CUSTOMER:

PART DESCRIPTION:
(6) FLAT CALIBRATION BLOCKS HT 30106

IF OUT OF TOLERANCE, PLACE X IN BOX TO RIGHT OF DIMENSION.

DRAWING DIMENSIONS	Part No. .253 X	Part No. .314 X	Part No. A-627 X	Part No. B-627 X	Part No. .751 X	Part No. .877
T-Dim.	.253	.314	A-627	627	.751	.877
Length	9.000	9.000	9.000	9.000	9.000	13.000
dia. of holes	.096	.095	.094	.095	.096	.095 .096
Notch width	.129	.130	.128	.128	.129	.131
Notch depth	.026	.032	.062	.063	.074	.084
½T hole (Taper Through hole)	.002	.004	.003	.005	.002	.004 .001
Edge of pc To Notch	1.002	1.001	1.003	1.002	1.002	.999
Width	4.008	4.008	4.008	4.008	4.008	4.008

INSPECTOR: Thomas Thomas

RECEIVING INSPECTOR:

JESSOP STEEL COMPANY
WASHINGTON, PENNSYLVANIA

CERTIFICATE OF TEST

DATE October 29, 1978

TO Williams & Col., Inc.
7640 Reinhold Drive
Cincinnati, Ohio 45237
Attn: Q. c. Clerk.

SHIPPED TO

GENTLEMEN: WE SHIPPED TO YOU VIA Ace Doran 10/30/78 SHIPPING MEMO # 54055 MATERIAL LISTED BELOW:

Jessop Type 304 S/SHRAP Spec 06-200 Dated 5/2/77, PDS 10710BA, ASTM A-240-7
ASME SA-240-S78,

HEAT NO.	YOUR ORDER NO.	OUR ORDER NO.	SIZE	QUANTITY	
30106	52311-99-S-03-06	S-283350	1.000 x 72 x 281	1 Pcs.	5994
"	"	"	1.000 x 72 x 278	1 Pc.	5930

HEAT NO.	YIELD STRENGTH LBS. PER SQ. IN.	TENSILE STRENGTH LBS. PER SQ. IN.	ELONG. % IN 2"	RED. OF AREA	HARDNESS	BEND	CORROSION	INT. CORROSION	GRAIN SIZE
30106	39,800	87,800	54	70	BHN167	ok		ok	

Magnetic Permeability less than 1.02.

CHEMICAL COMPOSITION (WHEN CALLED FOR BY SPECIFICATION)

HEAT NO.	C.	MN.	P.	S.	SI.	NI.	CR.	MO.	CO.	TI.	CU.	CB/TA.	Nit
30106	.056	1.79	.020	.010	.54	8.80	18.80	.60	.16		.38		.077

DECLARED TO UNDER OATH BEFORE ME

THIS _____ DAY OF _____ 19____

JESSOP STEEL COMPANY

BY _____ AUTHORIZED SIGNATURE

Q.A. NOV 3 '78

MATERIAL HAS BEEN PRODUCED TO, AND CONFORMS TO APPLIED SPECIFICATIONS.

NEW YORK POWER AUTHORITY
INDIAN POINT NUCLEAR POWER PLANT
UNIT NO. 3
CALIBRATION BLOCKS

INDIAN POINT UNIT NO. 3 DESIGNATION	:	INT-37
COMPONENT/SYSTEM	:	REACTOR VESSEL CLOSURE HEAD STUDS
SIZE/SCHEDULE	:	7"T X 5.75" DIAMETER STUD SEGMENT
MATERIAL	:	SA540 001-7 CARBON STEEL
HEAT OR IDENTITY NUMBER	:	P3199

ASME SECTION V AND XI 1983 EDITION THROUGH SUMMER 1983 ADDENDA REQUIREMENTS:

1. Section V : T-535
2. Material : SA540 Grade B24 Carbon Steel
3. Size/Schedule: 57.17" Length and 7.06" Diameter

WESTINGHOUSE ELECTRIC CORPORATION - NSID - INSPECTION SERVICE DESIGN:

Calibration block was designed based on a Westinghouse Research Project developed to meet intent of ASME Boiler and Pressure Vessel Code Section XI 1970 Edition and Section XI 1974 Edition through Summer 1975 Addenda for the volumetric examination of bolting.

RECOMMENDATION:

2 new calibration blocks, one for the Reactor Vessel Closure Head Studs and one for the Reactor Coolant Pump Main Flange Bolting (calibration block not required for Preservice or 1st Interval per Westinghouse Research Project), designed to T-535 Bolting Material, Figure T-535.1, Table T-535.1 and Table T-535.2 would require manufacturing to meet Section V-1983 Edition through Summer 1983 Addenda requirements.

324

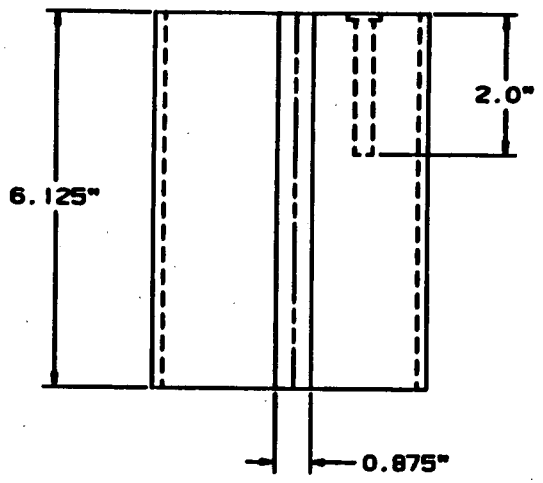

0.375" DIAMETER X 2" DEEP FLAT BOTTOM HOLE WITH 0.125" X 0.625" DIAMETER COUNTERBORE HOLE. FLAT BOTTOM HOLE TO BE PARALLEL TO OPPOSITE END SURFACE OF BLOCK. PLUG HOLE FULL DEPTH AND DIAMETER WITH EPOXY. PRESS FIT AND MACHINE FLUSH.

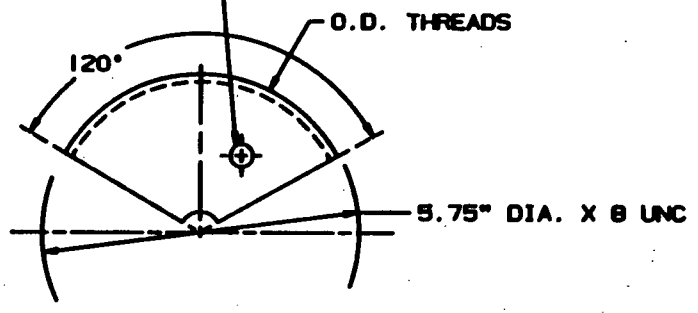

BOTTOM VIEW

COMPUTER SYSTEM PLANT MODELING

NSSD TECHNICAL APPROVAL Philip C. Burkes	11-20-86	Westinghouse Electric Corporation PLANT ENGINEERING DIVISION - PITTSBURGH, PA
LEVEL III REVIEW David Kung	11-20-86	TITLE CALIBRATION BLOCK INT-37 REACTOR VESSEL CLOSURE HEAD STUDS 6.125"T X 5.75" DIAMETER STUD SEGMENT SA540 001-7 CARBON STEEL IDENTITY NO.: P3199
		SIZE C DR. NO. REV.

REVISION

TT.

Spectrochemical Laboratories Inc.

Telephone: 412-371-2345
TWX: 710-664-4439

8350 FRANKSTOWN AVENUE
PITTSBURGH, PA. 15221

March 1, 1973

Westinghouse Electric Corporation
N.E.S.
P.O. Box 355
Pittsburgh, Pennsylvania 15230

Attn: Mr. Dave Cowfer

ANALYSES REPORT
IN WEIGHT %.

Received 2-28-73

R.V. Stud Standard
SA 540 001-7
Lot #1
Our:P3199

C	.39
S	.012
Si	.32
Mn	.77
P	.015
Mo	.35
Ni	1.77
Cr	.78
V	.001

This sample does meet with specification.

SPECTROCHEMICAL LABORATORIES, INC.

T.L. Fulton

As a mutual protection to clients, the public and ourselves, all reports are submitted as the confidential property of clients, and authorization for publication of statements, conclusions or extracts from or regarding our reports is reserved pending our written approval.

NEW YORK POWER AUTHORITY
INDIAN POINT NUCLEAR POWER PLANT
UNIT NO. 3
CALIBRATION BLOCKS

INDIAN POINT UNIT NO. 3 DESIGNATION	:	INT-38
COMPONENT/SYSTEM	:	PRESSURIZER
SIZE/SCHEDULE	:	4.75"T X 16.625"L X 6.0"W
MATERIAL	:	SA533 CLASS 1 GRADE B CARBON STEEL
HEAT OR IDENTITY NUMBER	:	B-9003-3

ASME SECTION V AND XI 1983 EDITION THROUGH SUMMER 1983 ADDENDA REQUIREMENTS:

1. Section V : T-434
2. Material : Upper & Lower Head - SA216 Grade WCC Carbon Steel; Shell - SA302 Grade B Carbon Steel
3. Size/Schedule: 4.75"T x 14.56"L x 6.0"W

WESTINGHOUSE ELECTRIC CORPORATION - NSID - INSPECTION SERVICE DESIGN:

Calibration block was designed to meet intent of ASME Boiler and Pressure Vessel Code Section XI-1974 Edition through Summer 1975 Addenda.

RECOMMENDATION:

Calibration block to meet requirements of Section V and Section XI - 1983 Edition through Summer 1983 Addenda would require material of SA216 Grade WCC or SA302 Grade B (although P-Number groupings are equivalent with SA533 Class 1 Grade B), and as required by Figure T-434 side drilled hole to be 1.5" minimum instead of 1.188", and hole tolerances documented.

NOTES:
1. DRILL AND REAM 6 HOLES 3" MINIMUM DEEP.

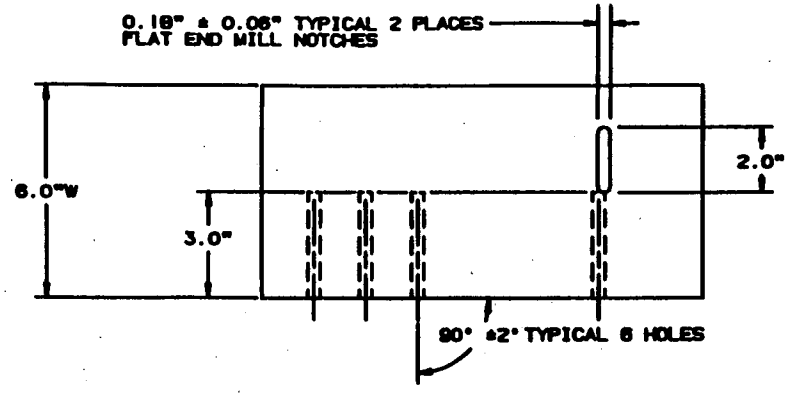

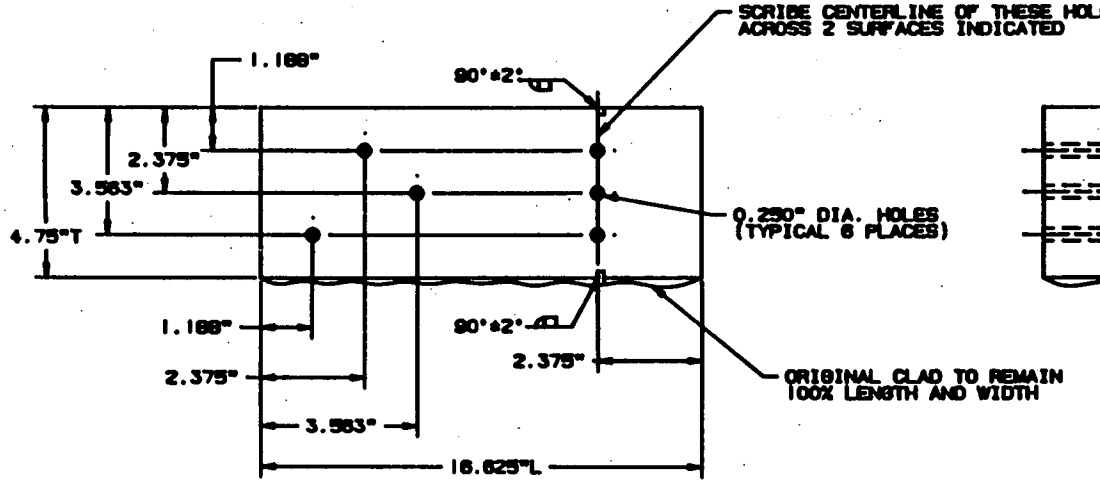

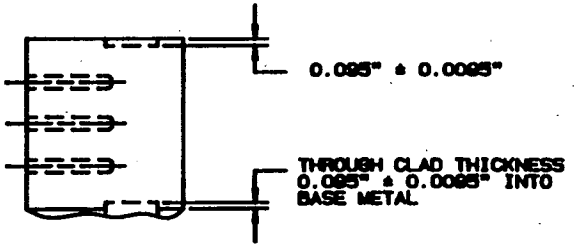

COMPUTER SYSTEM PLANT MODELING

NEED TECHNICAL APPROVAL Phillip C. Burkes	11-20-86	Westinghouse Electric Corporation PLANT ENGINEERING DIVISION - PITTSBURGH, PA
LEVEL III REVIEW David Kanik	11-20-86	TITLE CALIBRATION BLOCK INT-38 PRESSURIZER 4.75"T X 16.625"L X 6.0"W SA533 GRADE B CLASS 1 CARBON STEEL IDENTITY NO.: B-9003-3
		SIZE C SK. NO. REV.

REVISION

NSD PA1010

Nuclear Service Division
QUALITY RELEASE

QR- 1772 REV. 0

PURCHASE ORDER	PART NAME	DRAWING & REV.
406244	Calibration Block	2001, Rev. 4

PAR NO.	CHG. NOTICE NO.	P.O. ITEM NO.	PROJ./S.O. NO.	QTY. ON ORDER	QTY. RELEASED
0	0	001	INSN-9327	1	1

SUPPLIER	E. SPEC. & REV.	ORDER
Tooling Specialists	N/A	COMPLETE ☑ YES ☐ NO

SERIAL OR IDENTIFICATION NOS.

INT-38

HT # B9003-3

The equipment shown hereon is released by W Quality Assurance. Shipment may be made subject to authorization by W Purchasing. In the Audit Checklist below, an A indicates acceptability, a C indicates a contingency and a W indicates that W QA has waived the auditing or witnessing of the attribute. All non-applicable items are lined out.

AUDIT CHECKLIST

☑ Material Certifications supplied by WNSD	~~☐ Non-Operating Electrical Tests~~
~~☐ Heat Treat Records~~	~~☐ Operating Electrical Test~~
~~☐ RT Film and Records~~	~~☐ Pressure Test~~
~~☐ PT/MT Records~~	~~☐ Seat Tightness Test~~
☑ Visual	~~☐ Performance Test~~
☑ Dimensional	☑ Cleanliness
~~☐ UT Records~~	☑ Packaging
~~☐ Personnel Qualification: Welding, NDT~~	~~☐ Code Form~~
~~☐~~	~~☐ Painting~~
~~☐~~	☑ C. of C.

DEVIATION NOTICES AND REMARKS (ALL DEVIATIONS HAVE BEEN APPROVED BY THE RESPONSIBLE WESTINGHOUSE ENGINEER UNLESS A SPECIFIC EXCEPTION IS STATED.)

THE SUPPLIER CERTIFIES that for the equipment and material released, all contractual requirements have been met. Approved deviations, if any, are listed above.

SUPPLIER SIGNATURE Thomas D Shaver DATE 10/11/79

TITLE

The equipment shown hereon is released by W Quality Assurance. Shipment may be made subject to authorization by W Purchasing.

The equipment supplier has certified that the equipment above meets all requirements of the purchase order, drawings and specifications. Westinghouse has reviewed evidence supporting this release and except as specified above has detected no deviations from such requirements. This release does not waive any rights Westinghouse may have under the purchase order including Westinghouse's right to reject the equipment upon discovery of any such deviations after arrival at destination.

Karl R. Moore 10-1-79
Westinghouse Quality Assurance Representative

REQUISITIONER

Tooling Specialists, Inc.
Certification Letter of Compliance

To: @ NES
P.O. Box 355
Pittsburgh PA 15230

Date: 9/28/79

Tooling Specialists, Inc. certifies that all purchase order requirements have been met for the following equipment and material. Any deviations from the order requirements have had Westinghouse NSD approval prior to shipment. Deviation Notice (D/N) numbers applicable are NA (N/A if not applicable).

Westinghouse Purchase Order Number 544-MXK-406244-XN
P.O. Change Notice number(s) 00
Procurement Advisory Release (PAR) number(s) 000

P.O. Item #	Dwg. or Sketch and Rev. #	Base Mat'l & Heat #	Weld Joining Mat'l & Heat #	Cladding Mat'l and Heat #
001 1pc	W001 Rev 4	B9003-3		

weld joining procedure used NA
(include revision #)

cladding procedure used NA
(include revision #)

heat treating procedure used NA
(include revision #)

One copy each of the following documents as required by the purchase order are attached to this letter. All (including letter) are included with this shipment.

- ✓ Westinghouse Quality Release
- NA Base material mill test report(s)
- NA Weld operator certification
- NA Heat treat chart(s)
- ✓ Inspection Report
- NA Weld joining material mill test report
- NA Cladding material mill test report
- Other _____

One additional copy each of this letter and the above documents are hereby forwarded to the Westinghouse Buyer.

All records supporting this certification letter are available at Tooling Specialists.

Thomas O Shearer
(signature)

Tooling Specialists, Inc.

INSPECTION REPORT

Page 1 of 1

TOOLING SPECIALISTS, INC.
Latrobe, Pa. 15650
Phone: (412) 539-2534

Dwg. # W001
Revision 4
Item
P. O. # 544-MXK-406244-XN
Work Order # 21587

CUSTOMER: (W) N.E.S. INT-38 HT B9003-3

PART DESCRIPTION: (1) Calibration Block with Cladding

IF OUT OF TOLERANCE, PLACE X IN BOX TO RIGHT OF DIMENSION.

DRAWING DIMENSIONS	Part No.	X	Part No.	X	Part No.	X	Part No.	X	Part No.	X	Part No.
6 T"	4.770										
1/4" Reamed Holes (6)	.250										
3" Deep	3.00										
2" Long (Notch)	2.000										
1/8 to 1/4 Dia Flat end mill Notch	.249										
2% T Deep (.0954)	.095										
3"	3.006										
(3) T/4 (1.1925)	1.194										
(3) T/2 (2.385)	2.387										
3.5 T (16.695)	16.511										
T or 6" Min.	6.010										
3/4 T (3.5775)	3.579										
Scribe Centerline of Holes & Holes app. Side Cladding	OK										

INSPECTOR: Thomas P. Shaw
Kenneth G. Jones 9-28-79

RECEIVING INSPECTOR:

Mr. J. S. Meek

COMBUSTION ENGINEERING, INC

METALLURGICAL RESEARCH AND DEVELOPMENT DEPT

MATERIALS CERTIFICATION REPORT

Revision # 2
September 4, 1974

MATERIAL SPECIFICATION P3F12 (d) CONTRACT NO. 9071

VENDOR Lukens Steel Company JOB NO. Rej. Notice 02401

HEAT NO. A-9406-2 CODE NO. B-9003-3

MATERIAL DESCRIPTION 196-1/8" x 99-3/4" x 11" (Test Plate "B") Upper Shell

MILL CHEMICAL ANALYSIS

TYPE	C	Mn	P	S	Si	Ni	Cr	Mo	Cb	Cu	
	.24	1.35	.010	.020	.27	.61		.55			

MECHANICAL TESTS

TEST NO.	GAUGE	TEST TEMPERATURE °F	YIELD STRENGTH, KSI	ULTIMATE TENSILE STRENGTH, KSI	ELONG. IN 2" %	REDUCTION OF AREA %
SW-TA	.505	R.T.	62.9	86.3	26.0	64.4
SW-TB	.505	R.T.	64.1	86.6	26.0	63.7

IMPACT AND/OR FRACTURE TESTS

TYPE	TEMP. °F	VALUES			TEMP. °F	VALUES			NDT
CVN Impacts		Ft/Lbs.	% Shear	Mils Lat.Exp.		DROP WEIGHTS			
	+10	25	10	20					
	+10	23	10	18					
	+10	13	5	10	-20	1F			
	+40	31	15	26	-10	1F			-10°F
	+40	35	15	28	0	2 NF			
	+40	34	15	25					
	+75	40	25	29		Ft/Lbs	%Shear	MilsLatExp	
	+75	44	25	31	+110	69	40	50	
	+75	42	25	29	+160	78	80	61	
	+100	43	30	40	+160	84	80	64	
	+100	50	40	42	+160	79	80	62	
	+100	47	30	38	+212	99	100	75	
	+110	64	40	46	+212	92	95	72	
	+110	62	40	43	+212	102	100	76	

ADDITIONAL DATA INCLUDING HEAT TREATMENT:

(A) 1650°F ± 25°F for 1 Hour/Inch thickness. Water Quenched.
(B) 1225°F ± 25°F for 3/4 Hour/Inch thickness (Held on High Side).
(C) 1150°F ± 25°F for 40 Hours (Held on High Side). Furnace cooled to 600°F.

The impacts were taken transverse to the major rolling direction of the plate at the 1/4T level and notched perpendicular to the plate surface.
The tensiles were taken in accordance with ASTM A-20-68.
The drop weights were taken transverse to the rolling direction.
Tested in accordance with M & P Specification N-5.5.2.11 (a) Add. 3 (b).

Form E-2120

We hereby certify that the foregoing data is a true copy of the data furnished us by the producing mill, or data resulting from tests performed in the Combustion Metallurgical Laboratory.

COMBUSTION ENGINEERING, INC.

BY J. M. Arnold

J. M. Arnold, September 19, 1972

cc: P Webb (20
S. R. Lewis
R. E. Smith
H. Dinwiddie
R. E. Lorentz, Jr.

332

Mr. J. S. Meek

COMBUSTION ENGINEERING, INC.

METALLURGICAL RESEARCH AND DEVELOPMENT DEPT

MATERIALS CERTIFICATION REPORT

MATERIAL SPECIFICATION P3F12 (d) CONTRACT NO. 9071

VENDOR Lukens Steel Company JOB NO. Rej. Notice 02401-005

HEAT NO. A 9406-2 CODE NO. B-9003-3

MATERIAL DESCRIPTION 196-1/8" x 99-3/4" x 11" (Test Plate "B") Upper Shell

MILL CHEMICAL ANALYSIS

TYPE	C	Mn	P	S	Si	Ni	Cr	Mo	Cb	Cu	
	.24	1.35	.010	.020	.27	.61		.55		.13	

MECHANICAL TESTS

TEST NO.	GAUGE	TEST TEMPERATURE °F	YIELD STRENGTH, KSI	ULTIMATE TENSILE STRENGTH, KSI	ELONG. IN 2" %	REDUCTION OF AREA %
SW-TA	.505	R.T.	62.9	86.3	26.0	64.4
SW-TB	.505	R.T.	64.1	86.6	26.0	63.7

IMPACT AND/OR FRACTURE TESTS

TYPE	TEMP. °F	VALUES Ft/Lbs.	% Shear	Mils Lat.Exp.	TEMP. °F	VALUES DROP WEIGHTS	NDT
CVN Impacts	+10	25	10	18			
	+10	15	5	11	-20	1F	
	+10	24	10	18	-10	1F	-10°F
	+20	32	15	25	0	2NF	
	+20	18	10	16			
	+20	15	10	14			
	+30	21	10	17			
	+30	31	15	22			
	+30	30	15	22			
	+40	34	15	26			
	+40	40	20	31			
	+40	27	10	22			

ADDITIONAL DATA INCLUDING HEAT TREATMENT:

(A) 1650°F ± 25°F for 1 Hour/Inch thickness. Water Quenched.
(B) 1225°F ± 25°F for 3/4 Hour/Inch thickness (Held on High Side).
(C) 1150°F ± 25°F for 40 Hours (Held on High Side). Furnace cooled to 600°F.

The impacts were taken parallel to the major rolling direction of the plate at the 1/4T level and notched perpendicular to the plate surface.
The tensiles were taken in accordance with ASTM A-20-68.
The drop weights were taken transverse to the rolling direction.

Form E-2120

We hereby certify that the foregoing data is a true copy of the data furnished us by the producing mill, or data resulting from tests performed in the Combustion Metallurgical Laboratory.

COMBUSTION ENGINEERING, INC.

BY J. M. Arnold

J. M. Arnold

DATE September 19, 1972

cc: P Webb (20
S. R. Lewis
R. E. Smith
H. Dinwiddie
R. E. Lorenz, Jr.

C-E Check Analysis
Code No. B-9003-3
Heat No. A-9406-2

2071
9003-3

SI	.24
S	.012
P	.008
MN	1.24
C	.25
CR	.11
NI	.60
MO	.56
B	.0003
CB	Less Than .01
V	.002
CO	.011
CU	.13
AL	.041 Sol
	.003 Acid Insoluble
	.044 Total
N_2	.009
TI	Less Than .01
W	Less Than .01
AS	.011
SN	.008
ZR	.001

K+E 10 X 10 TO ½ INCH 46 1320
7 X 10 INCHES MADE IN U.S.A.
KEUFFEL & ESSER CO.

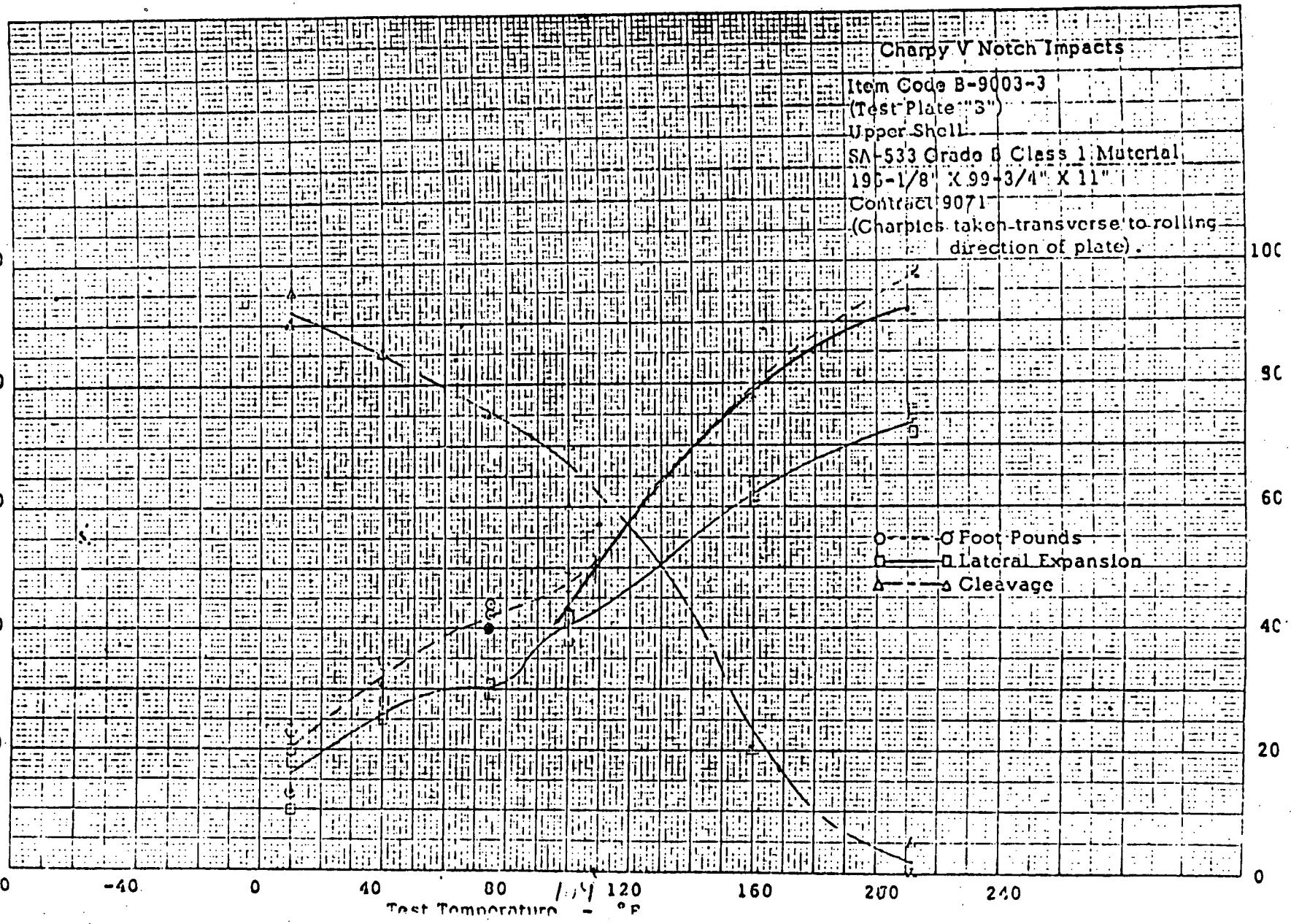

January 19, 1972

WESTINGHOUSE—NUCLEAR ENERGY SYSTEM

SHOP ORDER

COMPANY

MMM 11906 FILMSORT

INT-38

NEW YORK POWER AUTHORITY
INDIAN POINT NUCLEAR POWER PLANT
UNIT NO. 3
CALIBRATION BLOCKS

INDIAN POINT UNIT NO. 3 DESIGNATION	:	INT-39
COMPONENT/SYSTEM	:	REACTOR VESSEL FLANGE FROM SEAL SURFACE, REACTOR VESSEL NOZZLE TO SHELL AND REACTOR VESSEL LIGAMENTS
SIZE/SCHEDULE	:	14.0"T&L x 36.0"L&T x 6.0"W
MATERIAL	:	SA508-77 CLASS 2 CARBON STEEL
HEAT OR IDENTITY NUMBER	:	6-0472

ASME SECTION V AND XI 1983 EDITION THROUGH SUMMER 1983 ADDENDA REQUIREMENTS:

1. Section V : T-110 and T-434
2. Material : A508-64 Carbon Steel
3. Size/Schedule: 14"T x 42.0"L x 6.0"W

WESTINGHOUSE ELECTRIC CORPORATION - NSID - INSPECTION SERVICE DESIGN:

Calibration block was designed to perform specific Component/System examinations to meet the intent of ASME Boiler and Pressure Vessel Code Section XI-1974 Edition through Summer 1975 Addenda.

RECOMMENDATION:

Calibration block design, following ASME Boiler and Pressure Vessel Code Section V - 1983 Edition through Summer 1983 Addenda T-110 Guidelines performs the intended required examinations of Reactor Vessel Flange from Seal Surface, Reactor Vessel Nozzle to Shell and Reactor Vessel Ligaments and no further modification would be required. P-Number Groupings for Materials SA508-77 Class 2 Carbon Steel and A508-64 Carbon Steel are equivalent.

NOTES:
1. CENTERLINE OF HOLES MUST BE PARALLEL TO NOMINAL O.D. CLAD SURFACE ± 0.010".
2. CLADDING TO BE 308 OR 309 STAINLESS STEEL 0.25"T +0" - 0.125".
3. CLADDING TO BE DONE IN ACCORDANCE WITH ASME BOILER AND PRESSURE VESSEL CODE SECTION XI 1974 EDITION THRU SUMMER 1975 ADDENDA APPENDIX I ARTICLE I-3000 PARAGRAPH I-3122 AND I-3123.

TOLERANCES:
4. BLOCK LENGTH ± 1.0" - 0.125".
5. BLOCK THICKNESS ± 0.0313".
6. BLOCK WIDTH ± 0.0313".
7. HOLE DEPTH ± 0.0313".
8. HOLE DIAMETER ± 0.005".
9. HOLE LOCATION ± 0.0313".

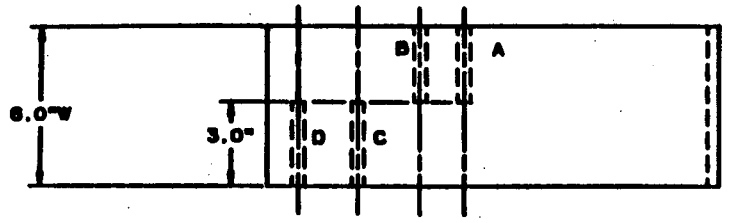

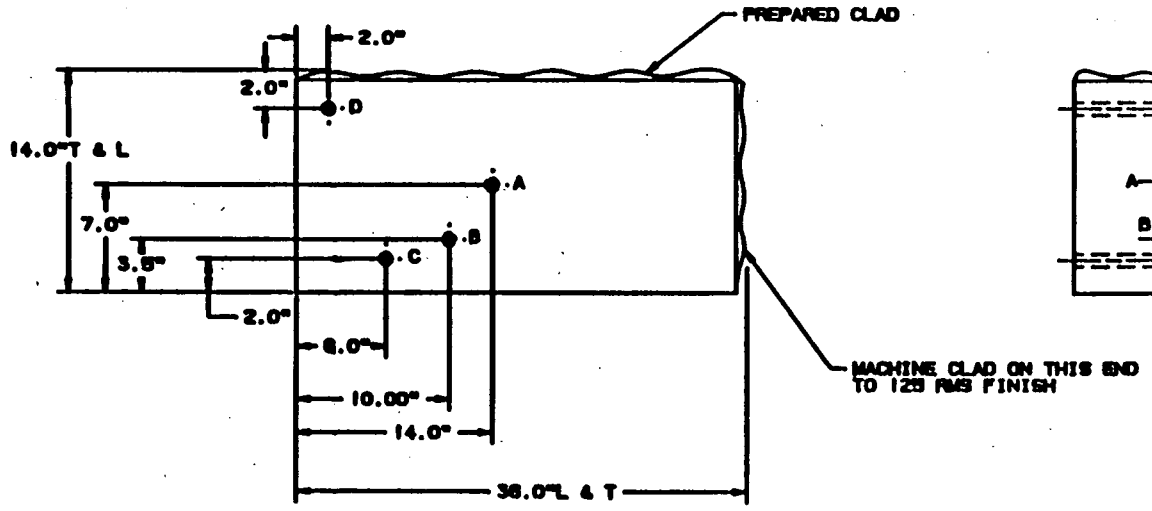

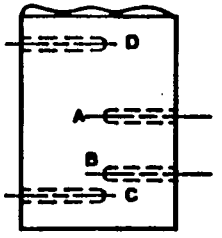

NOTE: 4 HOLES DRILL 0.375" DIAMETER X 3.0" DEEP

COMPUTER SYSTEM PLANT MODELING

NSSS TECHNICAL APPROVAL Phillip C. Bukas	11-20-86	Westinghouse Electric Corporation PLANT ENGINEERING DIVISION - PITTSBURGH, PA
LEVEL III REVIEW Donald Kunk	11-20-86	TITLE CALIBRATION BLOCK INT-39 REACTOR VESSEL FLANGE FROM SEAL SURFACE, REACTOR VESSEL NOZZLE TO SHELL AND REACTOR VESSEL LIGAMENTS 14.0"T & L X 36.0"L & T X 6.0"W SA508-77 CLASS 2 CARBON STEEL HEAT NO.: 6-0472
ENG		
ENG		
MGR		SIZE C DWG. NO. REV.

REVISION

Offshore Power Systems

OFFSHORE POWER SYSTEMS
CERTIFICATE OF COMPLIANCE

TO: WESTINGHOUSE ELECTRIC CORPORATION
NUCLEAR ENERGY SYSTEMS
P. O. Box 355
Pittsburgh, Pennsylvania 15230

Westinghouse Purchase Order No. 544-MXK-406247-RN
Offshore Power Systems Order No. A-205
Inspection Calibration Blocks

It is hereby certified that the materials have been purchased and machined as specified on Purchase Order 544-MXK-406247-RN. The Inspection Calibration Blocks have been fabricated in accordance with the Westinghouse drawings attached to the Purchase Order.

The document data package is in accordance with the requirements of Purchase Order 544-MXK-406247-RN. Copies of all documents/records will be maintained on file at Offshore Power Systems.

Certified by: [signature] Date: 2-25-81

John H. Weiler, Manager
Quality Control

Witness [signature] Date 2/25/81

Witness [signature] Date 2/25/81

Attachment: Quality Data Pack

FORM NO. 10578

NATIONAL FORGE COMPANY

MATERIAL CERTIFICATION DOCUMENTATION PACKAGE

Customer: OFFSHORE POWER SYSTEMS

Forge Div. Irvine [X] **Erie** [ ]

Purchase Order No.: 0GI-02-002329-X

Foundry Div. [ ]

Drawing No.: N/A SIZES PER PURCHASE ORDER

NFC Order No.: 60-A-1289

Nomenclature: ULTRASONIC TEST BLOCKS, 6-1/8" X 10-1/8" X 30-1/4"

NFC Serial No.: 02-001

Specification: ANSI/ASTM A508-77, CLASS 2

NATIONAL FORGE COMPANY DOCUMENTS APPROVED AND USED ON THIS CONTRACT

Ultrasonic Procedure:
Magnetic Particle Procedure:
Heat Treat Procedure:
Impact Test Procedure:
Forging Test Drawing:
Other:

DOCUMENTATION PACKAGE TABLE OF CONTENTS

3 Chemistry/Mechanical/NDT Data
Transition Curve
Heat Treatment Charts/Table IV Form
Dimensional Data
Forging Material Log
Heat Stability Data
Photomicrographs
Test Material (Sep. Cover)
U-1A Form
U-2 Form
Other

This is to certify that the material identified above has been processed, tested and inspected in accordance with the requirements of the purchase order and applicable specifications, including any amendments and conforms to the requirements thereof.

S.L. Weverso
Authorized Company Representative

Date: 7-1-80

D.L. McNeal
D.L. McNEAL, QUALITY CONTROL ENGINEER

QAN-007

For order A205

NATIONAL FORGE COMPANY
QUALITY CONTROL DEPARTMENT

NO. 1056 B

MATERIAL CERTIFICATION REPORT NO. 0- 19925

NFC SHOP NO. 60-A-1289 SERIAL NO. 02-001
CUSTOMER OFFSHORE POWER SYSTEMS
CUSTOMER ORDER NO. 0G1-02-002329-X

CHEMICAL ANALYSIS

HEAT NO.	C	Mn	P	S	Si	Ni	Cr	Mo	V	Al	Cu	Co	Ti						
6-0472	.19	.73	.007	.006	.22	.85	.41	.62	.05										
CHECK	.19	.75	.007	.006	.21	.84	.42	.62	.05										

MECHANICAL PROPERTIES

LEGEND	SPECIMEN IDENT. NO.	TENSILE psi	YIELD psi @ .2	% ELONG	% R/A	GRAIN SIZE	HARDNESS
L - LONG	LT	93,600	77,500	24.5	73.0		
R - RAD	LB	93,000	75,700	25.0	73.7		
X - ANN							
Y - TANG							

MANUFACTURING NOTES AND HEAT TREATMENT DATA

OPERATION	TO °F	HRS HOLD
NORMALIZED	1680	7
AUSTENITIZED	1580	7
QUENCHED IN WATER		
TEMPERED	1260	7

IMPACT DATA

SPCMN. IDNT. NO.	°F	FT. LBS.	% SHEAR	LATERAL EXPANSION
LT	40	131.0	79	.086
		121.0	71	.081
		86.0	63	.064
LB	40	101.0	61	.064
		105.0	63	.074
		140.0	70	.092

ULTRASONIC INSPECTED PER ANSI/ASTM A508-77,S2 AS MODIFIED BY CUST. P.O. REV. A AND FOUND TO BE SATISFACTORY WITH NO REPORTABLE INDICATIONS.
MAGNETIC PARTICLE INSPECTED PER

TENSILE SPECIMEN SIZE = .505"
ROUND FLUTED INGOT MOLD
FREE OF MERCURY CONTAMINATION

COPIES OF ACTUAL TEST DATA AVAILABLE FOR REVIEW

QAN. 1 1001

SANDVIK

SANDVIK, INC. SCRANTON WORKS
P.O. BOX 1220, SCRANTON PA 18501 PH 717-587-5191
PLANT LOCATION, INTERSTATE 81 WAVERLY EXIT 59

JAE-2778	062017	01	25729		7/24/80

SOLD TO: STATE WELDING SUPPLY
JACKSONVILLE FL

SPECIFICATION AND MATERIAL: AWS A-5.9
ASME SFA5.9

SANDVIK STAINLESS STEEL WELDING WIRE

Filler Metal Analysis, %

Type ER Size Heat Quantity	C	Si	Mn	P	S	Cr	Ni
ER 309L .045 x 25/sp 463980 129.10	.013	.50	2.03	.011	.003	23.00	13.37

Mo	Cu
.04	.043

For Bengt H. Berg, Quality Assurance Manager

(M-B-A-1, REV. 3)kc

A011 CMTR
A205

CUSTOMER COPY NO. 1

WELD RECORD

WT ID 50-A-1287-01-001 (END)

CODE / STD: ASME
SECTION: II
CLASS: —
JT. TYPE: OVERLAY
BASE MAT'L: SA-516, CLASS 2 TO —
BACKING TYPE: NA
MAT'L THICK.: > ½"
QAN: 0.7 TO —
WI QAN #: A011
OPS ORDER NO.: R2.35
WORK ORDER NO.: 50-125
DWG. NO.: FIGURE 2
REV.: —

CYCLE		ORIGINAL WELD ☑	REWORK NO.	ORIGINAL WELD ☐	REWORK NO.	ORIGINAL WELD ☐	REWORK NO.	ORIGINAL WELD ☐	REWORK NO.
WI									
WPS	TACK								
	ROOT								
	INTERMEDIATE								
	BALANCE	318-B-90							
WELDER I.D.			DATE		DATE		DATE		DATE
	TACK								
	ROOT								
	INTERMEDIATE		9.22.80						
	BALANCE	C Fowler 314	[illegible]						
FILLER METAL TYPE (QAN)	INSERT								
	TACK								
	ROOT								
	INTERMEDIATE								
	BALANCE	A011							
OP'S	WELD OPERATIONS VERIFICATION	[illegible] 9/22/80							
QC INSPECTION	FIT-UP								
	QAN (Record Above)	R. [illegible]							
	CLEANLINESS								
	FINAL DIMEN.								
	SURFACE COND								
NONDESTRUCTIVE EXAMINATION	PT: BEVEL								
	PT: ROOT								
	PT: INTERMED								
	PT: FINAL	P.T. NOT required							
	PT: EXCAVATION								
	RT: ROOT								
	RT: INTERMED.								
	RT: FINAL								
	UT: WALL THK								
	UT: INTERMED.								
	UT: FINAL								
	FINAL								
	OTHER								
PREPARED BY / DATE:									
APV'D BY	OPERATIONS / DATE	[illegible]							
	QC / DATE	[illegible] 2-7-80							
	OTHER								

REMARKS: PT [illegible] RE[illegible] BY [illegible] [illegible]

FINAL QC ACCEPTANCE: [illegible] DATE: 2/17/81

FORM 724

WELD RECORD

COMPONENT ID 5-8-1287-21-0-1 (TOP)

CODE / STD: ASME | SECTION: XI | CLASS: — | JT. TYPE: BUTTWELD

BASE MAT'L: SA-105, CLASS 2 TO —

BACKING TYPE: NA

MAT'L THICK.: 2 3/4

QAN: C-7 TO — M QAN #: — A011

OPS ORDER NO.: A-225

WORK ORDER NO.: E3-125

DWG. NO.: FIGURE 1 REV. —

CYCLE			ORIGINAL WELD ☑	REWORK NO.	ORIGINAL WELD ☐	REWORK NO.	ORIGINAL WELD ☐	REWORK NO.	ORIGINAL WELD ☐	REWORK NO.
WI										
WPS	TACK									
	ROOT									
	INTERMEDIATE									
	BALANCE	✓	3S-B-90							
WELDER I.D.				DATE		DATE		DATE		DATE
	TACK									
	ROOT									
	INTERMEDIATE									
	BALANCE	✓	C Jones B14	9/18/80						
FILLER METAL TYPE/QAN	INSERT									
	TACK									
	ROOT									
	INTERMEDIATE									
	BALANCE	✓	A011							
QC'S	WELD OPERATIONS VERIFICATION	✓	[illegible]	9/18/80						
QC INSPECTION	FIT-UP									
	QAN (Record Above)	✓	[illegible]	9/18/80						
	CLEANLINESS									
	FINAL DIMEN.									
	SURFACE COND.									
NONDESTRUCTIVE EXAMINATION	MT/PT	BEVEL								
		ROOT								
		INTERMED.								
		FINAL	[illegible]	9/17/80						
		EXCAVATION								
	RT	ROOT								
		INTERMED.								
		FINAL								
	UT	WALL THK.								
		INTERMED.								
		FINAL								
		FINAL								
	OTHER									
PREPARED BY / DATE:										
APVD. BY	OPERATIONS / DATE		[illegible]							
	QC / DATE		[illegible]							
	OTHER									

REMARKS: PT [illegible] REQUIRED BY WELDING ENGINEER

FINAL QC ACCEPTANCE: [illegible] DATE: 2/17/81

FORM 724

WELD RECORD

JNT ID 60-6-1257-02-001 (TCF)

CODE / STD: ASME
SECTION: II
CLASS: —
JT. TYPE: OVERLAY
BASE MAT'L: SA-5[illegible] CLASS 2 TO —
BACKING TYPE: NA
MAT'L THICK.: > 3/4"
QAN: 207 TO —
MI QAN #: — A011

OPS ORDER NO.: A205
WORK ORDER NO.: 5[illegible]-125
DWG. NO.: Fig. 1
REV.: —

CYCLE		ORIGINAL WELD ☑	REWORK NO.	ORIGINAL WELD ☐	REWORK NO.	ORIGINAL WELD ☐	REWORK NO.	ORIGINAL WELD ☐	REWORK NO
WI									
WPS	TACK								
	ROOT								
	INTERMEDIATE								
	BALANCE	✓ 3(5)-8-20 [illegible]							
WELDER I.D.			DATE		DATE		DATE		DATE
	TACK								
	ROOT								
	INTERMEDIATE								
	BALANCE	✓ [illegible]	8-7-80						
FILLER METAL TYPE/QAN	INSERT								
	TACK								
	ROOT	A011							
	INTERMEDIATE								
	BALANCE	✓ [illegible]							
OP'S	WELD OPERATIONS VERIFICATION	✓ [illegible] 9/18/80							
QC INSPECTION	FIT-UP								
	QAN (Record Above)	✓ [illegible] 742559 [illegible]							
	CLEANLINESS								
	FINAL DIMEN.								
	SURFACE COND.								
NONDESTRUCTIVE EXAMINATION	PT: BEVEL								
	PT: ROOT								
	PT: INTERMED.								
	PT: FINAL	✓ [illegible] 9/7/80							
	PT: EXCAVATION								
	RT: ROOT								
	RT: INTERMED.								
	RT: FINAL								
	UT: WALL THK.								
	UT: INTERMED.								
	UT: FINAL								
	FINAL								
	OTHER								
PREPARED BY / DATE:									
APVD. BY	OPERATIONS / DATE	[illegible] 5-5-83							
	QC / DATE	[illegible] 8-7-8[illegible]							
	OTHER								

REMARKS: PT [illegible] SEE [illegible] BY WELD[illegible]

FINAL QC ACCEPTANCE: [illegible] DATE 2/17/81

FORM 724

WELD RECORD

PRINT ID 33-B-1259-01-3 L (END)

CODE / STD: ASME | SECTION: VIII | CLASS: — | JT. TYPE: OVERLAY

BASE MAT'L: SA-508 CLASS 2 TO —

BACKING TYPE: NA

MAT'L THICK.: 3/4

QAN: 007 TO — M QAN #: — AB 11

OPS ORDER NO.: A225

WORK ORDER NO.: 80-135

DWG. NO.: FIGURE 2 REV.: —

CYCLE		ORIGINAL WELD ☑	REWORK NO.	ORIGINAL WELD ☐	REWORK NO.	ORIGINAL WELD ☐	REWORK NO.	ORIGINAL WELD ☐	REWORK NO
WI									
WPS	TACK								
	ROOT								
	INTERMEDIATE								
	BALANCE	✓ 3(8)B-90							
			DATE		DATE		DATE		DATE
WELDER I.D.	TACK		9						
	ROOT								
	INTERMEDIATE		9 2380						
	BALANCE	✓ [illegible]	[illegible]						
FILLER METAL TYPE/QAN	INSERT								
	TACK								
	ROOT								
	INTERMEDIATE								
	BALANCE	✓ AB 11							
OPS	WELD OPERATIONS VERIFICATION	✓ [signature] 9/2/80							
QC INSPECTION	FIT-UP								
	QAN (Record Above)	✓ [signature]							
	CLEANLINESS								
	FINAL DIMEN.								
	SURFACE COND.								
NONDESTRUCTIVE EXAMINATION	MT/PT BEVEL								
	MT/PT ROOT								
	MT/PT INTERMED.								
	MT/PT FINAL	✓ P.T. Not Req'd							
	MT/PT EXCAVATION								
	RT ROOT								
	RT INTERMED.								
	RT FINAL								
	UT WALL THK.								
	UT INTERMED.								
	UT FINAL								
	FINAL								
	OTHER								
PREPARED BY / DATE:									
APVD. BY	OPERATIONS / DATE	[illegible]							
	QC / DATE	[illegible] 9-2-80							
	OTHER								

REMARKS: [illegible]

FINAL QC ACCEPTANCE: [signature] DATE: 2/17/81

FORM 724

WELD RECORD

NT ID 60-B-1254-01-002 (TOP)

CODE / STD: Nuc | SECTION: XI | CLASS: — | JT. TYPE: OVERLAY

BASE MAT'L: [illegible] TO —

QAN 007 TO —

BACKING TYPE: NP

MAT'L THICK: 3/4"

M QAN #: — A011

OPS ORDER NO. A205

WORK ORDER NO. 60-125

DWG. NO. E1J001 1 REV —

CYCLE		ORIGINAL WELD ☑	REWORK NO.	ORIGINAL WELD ☐	REWORK NO.	ORIGINAL WELD ☐	REWORK NO.	ORIGINAL WELD ☐	REWORK NO.
WI									
WPS	TACK								
	ROOT								
	INTERMEDIATE								
	BALANCE	318-B-90							
WELDER I.D.			DATE		DATE		DATE		DATE
	TACK								
	ROOT								
	INTERMEDIATE								
	BALANCE	[illegible]	9,1980						
FILLER METAL TYPE (QAN)	INSERT								
	TACK								
	ROOT								
	INTERMEDIATE								
	BALANCE	A011							
OP'S	WELD OPERATIONS VERIFICATION	[illegible] 9/1980							
QC INSPECTION	FIT-UP								
	QAN (Record Above)	[illegible]							
	CLEANLINESS								
	FINAL DIMEN.								
	SURFACE COND								
NONDESTRUCTIVE EXAMINATION	PT BEVEL								
	PT ROOT								
	PT INTERMED.								
	PT FINAL	[illegible] 9/1980							
	PT EXCAVATION								
	RT ROOT								
	RT INTERMED.								
	RT FINAL								
	UT WALL THK.								
	UT INTERMED.								
	UT FINAL								
	FINAL								
	OTHER								
PREPARED BY / DATE:									
APVD BY	OPERATIONS / DATE	[illegible]							
	QC / DATE	[illegible] 8-7-81							
	OTHER								

REMARKS: PT was [illegible] BY [illegible]

FINAL QC ACCEPTANCE: [illegible] DATE 2/17/81

FORM 724

WELD RECORD

NT ID 60-A-1251-1-[illegible] (T-P)

CODE / STD: ASME
SECTION: XI
CLASS: —
JT. TYPE: SVERLAY
OPS ORDER NO.: A-[illegible]-5
BASE MAT'L: SA 5, CLASS 2 TO —
BACKING TYPE: NA
MAT'L THICK.: 2 3/4
WORK ORDER NO.: [illegible]-125
QAN: 3-7 TO —
M QAN #: — A011
DWG. NO.: FIGURE 1
REV.: —

CYCLE		ORIGINAL WELD ☑	REWORK NO.	ORIGINAL WELD ☐	REWORK NO.	ORIGINAL WELD ☐	REWORK NO.	ORIGINAL WELD ☐	REWORK NO.
WI									
WPS	TACK								
	ROOT								
	INTERMEDIATE								
	BALANCE	✓ 3(8)B	90						
WELDER I.D.			DATE		DATE		DATE		DATE
	TACK								
	ROOT								
	INTERMEDIATE								
	BALANCE	✓ [illegible]	9/18/80						
FILLER METAL TYPE (QAN)	INSERT								
	TACK								
	ROOT								
	INTERMEDIATE								
	BALANCE	✓ A011							
OPS	WELD OPERATIONS VERIFICATION	✓ [illegible]	9/18/80						
QC INSPECTION	FIT-UP								
	QAN (Record Above)	[illegible]	9/18/80						
	CLEANLINESS								
	FINAL DIMEN.								
	SURFACE COND.								
NONDESTRUCTIVE EXAMINATION	MT/PT BEVEL								
	MT/PT ROOT								
	MT/PT INTERMED.								
	MT/PT FINAL	[illegible]	9/18/80						
	MT/PT EXCAVATION								
	RT ROOT								
	RT INTERMED.								
	RT FINAL								
	UT WALL THK.								
	UT INTERMED.								
	UT FINAL								
	FINAL								
	OTHER								
PREPARED BY / DATE.									
APVD. BY	OPERATIONS / DATE	[illegible]							
	QC / DATE	[illegible] 8-7-80							
	OTHER								

REMARKS: PT [illegible] beyond

FINAL QC ACCEPTANCE: [illegible] DATE 2/17/81

FORM 724

WELD RECORD

NT ID 6-A-1369-1-3 (ENC)

CODE / STD: ASME | SECTION: VI | CLASS: — | JT. TYPE: OVERLAY

BASE MAT'L: SA508 CL 2 TO —

BACKING TYPE: NA

MAT'L THICK.: 5/8

QAN: 007 TO — M QAN #: A011

OPS ORDER NO.: A205

WORK ORDER NO.: 50-125

DWG. NO.: Figure 2 REV. —

CYCLE		ORIGINAL WELD ☑	REWORK NO.	ORIGINAL WELD ☐	REWORK NO.	ORIGINAL WELD ☐	REWORK NO.	ORIGINAL WELD ☐	REWORK NO.
WI									
WPS	TACK								
	ROOT								
	INTERMEDIATE								
	BALANCE	✓ 3(B)-B-90							
WELDER I.D.			DATE		DATE		DATE		DATE
	TACK								
	ROOT	[redacted]	[redacted]						
	INTERMEDIATE		9/26/80						
	BALANCE	✓ [illegible] 814	[redacted]						
FILLER METAL TYPE/QAN	INSERT								
	TACK								
	ROOT								
	INTERMEDIATE								
	BALANCE	✓ A011							
OPS	WELD OPERATIONS VERIFICATION	✓ [illegible]	[redacted]						
QC INSPECTION	FIT-UP								
	QAN (Record Above)	✓ [illegible]							
	CLEANLINESS								
	FINAL DIMEN.								
	SURFACE COND.								
NONDESTRUCTIVE EXAMINATION	MT/PT BEVEL								
	MT/PT ROOT								
	MT/PT INTERMED.								
	MT/PT FINAL	✓ PT-NOT [illegible]							
	MT/PT EXCAVATION								
	RT ROOT								
	RT INTERMED.								
	RT FINAL								
	UT WALL THK.								
	UT INTERMED.								
	UT FINAL								
	FINAL								
	OTHER								
PREPARED BY / DATE:									
APVD. BY	OPERATIONS / DATE	[illegible]							
	QC / DATE	[redacted]							
	OTHER								

REMARKS: PT [illegible] VISUAL BY [illegible]

FINAL QC ACCEPTANCE: [illegible] DATE: 2/17/81

FORM 724

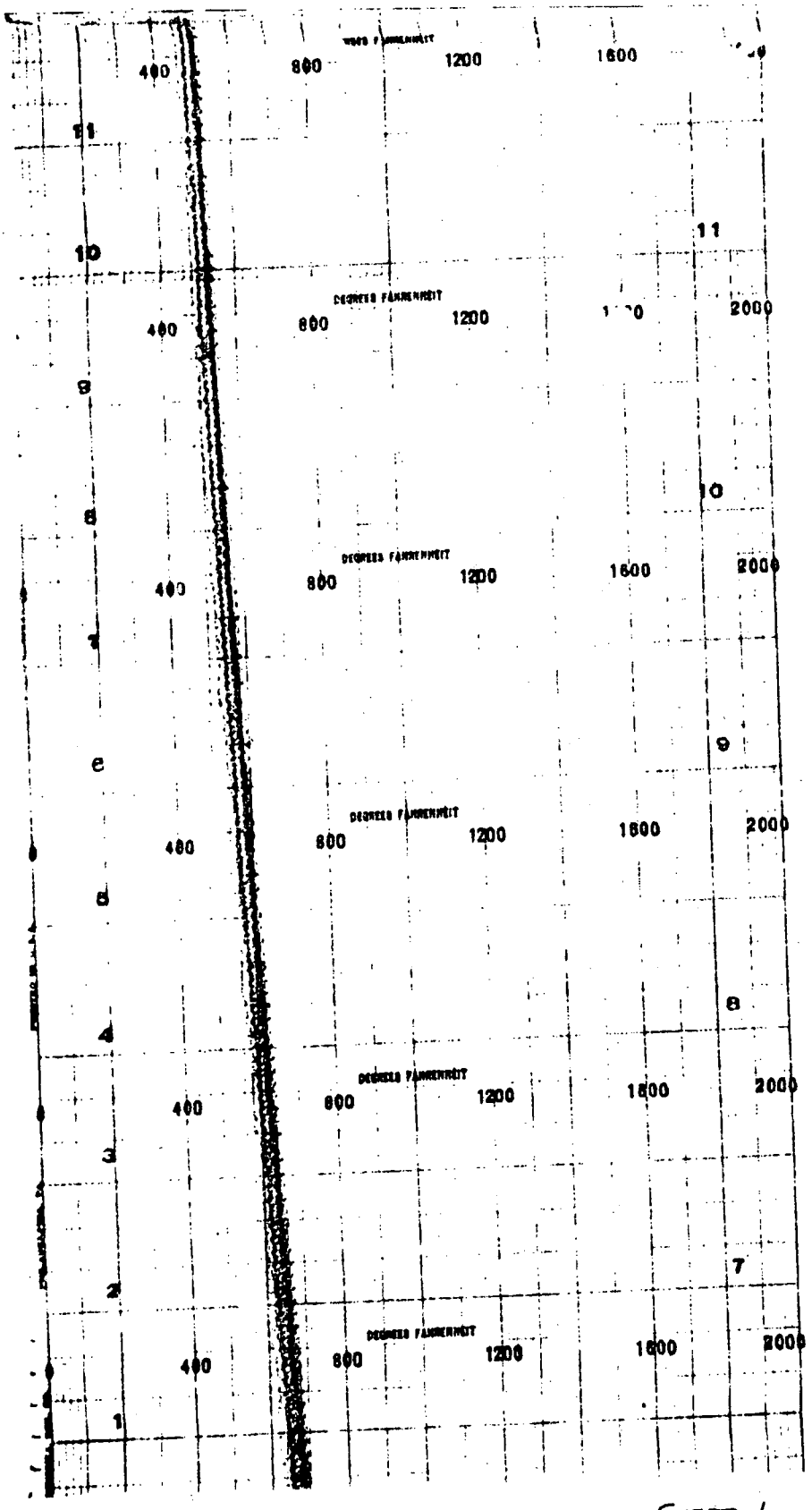

SHEET 1

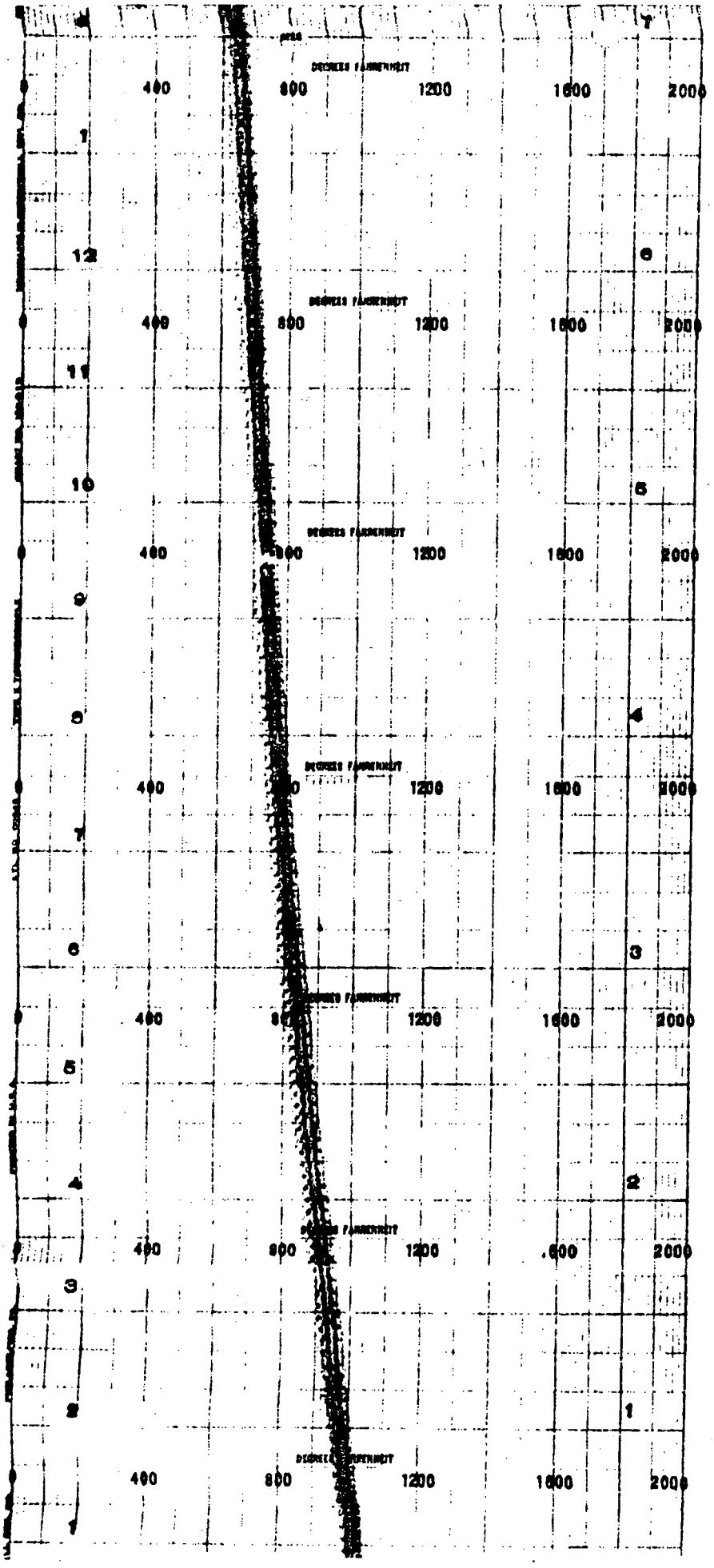
DEGREES FAHRENHEIT
400
800
1200
1600
2000
1
2
3
4
5
6
7
8
9
10
11
12
1
2
3
4
5
6
7
8

SHEET 2

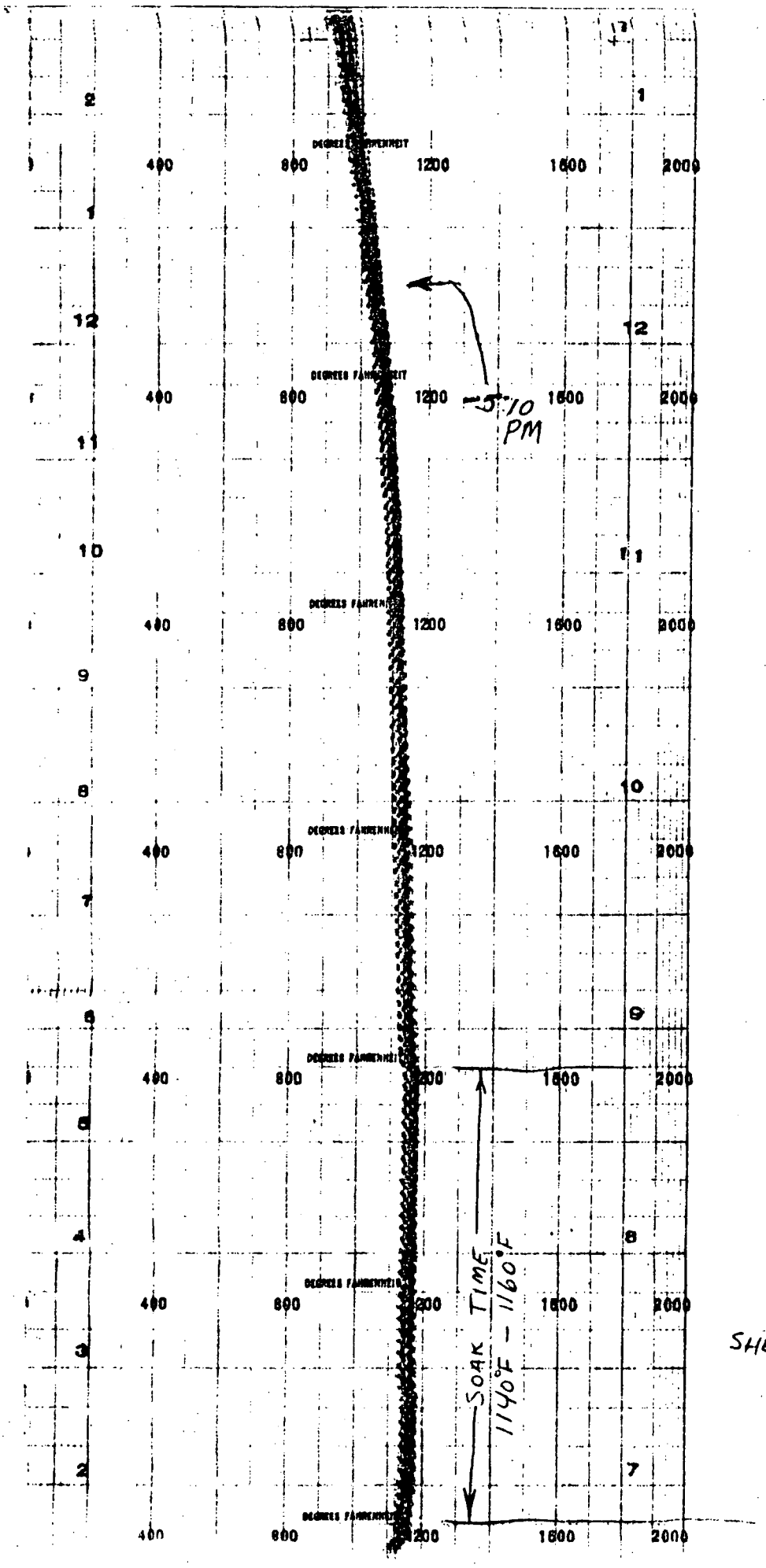

SHEET 3

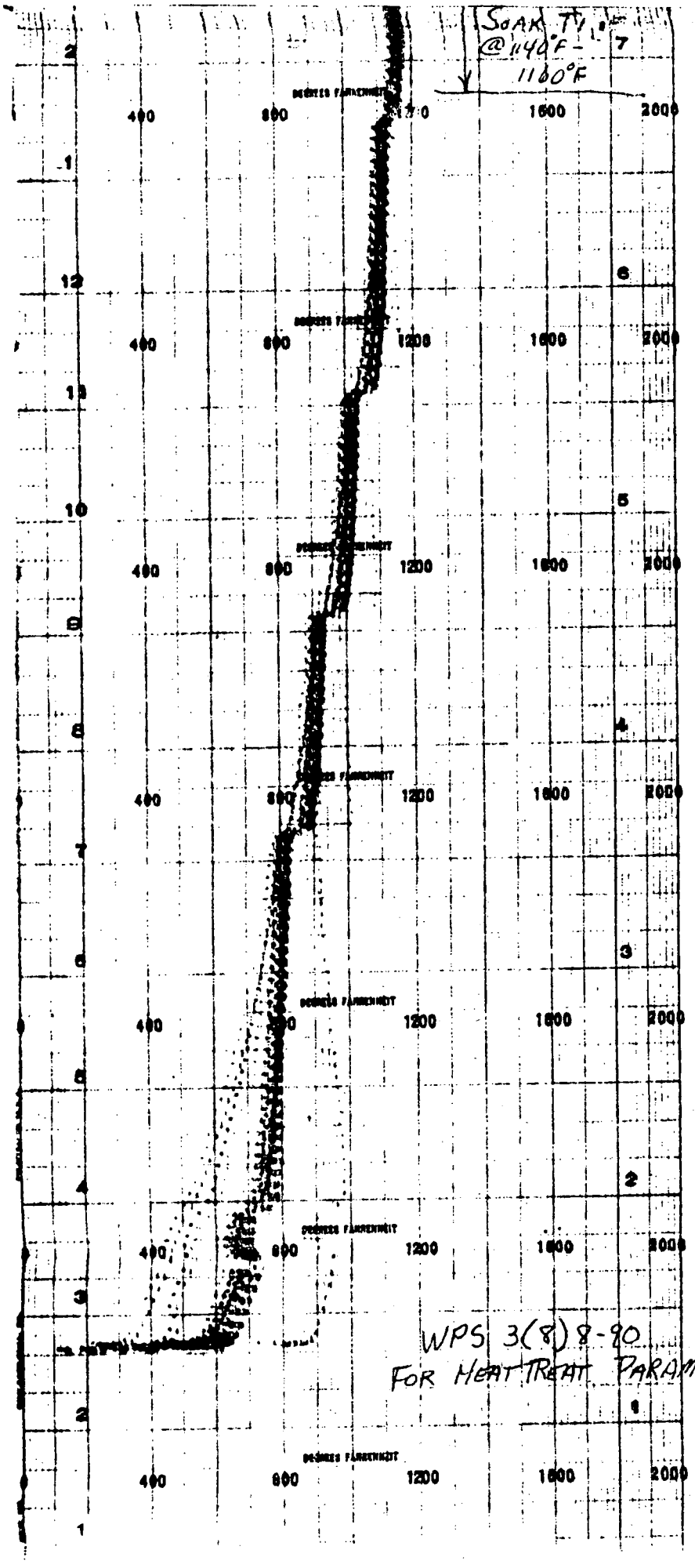

WPS 3(8) 8-90
FOR HEAT TREAT PARAMETERS
SHEET 4

QUALITY CONTROL
DIMENSIONAL INSPECTION REPORT

OPS ORDER NO. A-205 WORK ORDER NO. 80-125 QUALITY LEVEL QLS - SPECIAL
DRAWING NO. N/A SKETCH ATT
MEASURING EQUIPMENT USED 6' SCALE 24/12" + 6" VERNIERS

1-29-81

W.O. OPER. NO.	LOCATION DESCRIPTION	PIN/QAN	DIMENSION TOL.	DIMENSION REQ.	DIMENSION ACTUAL	DISP.	BY
110	DIM A	N/A	+1" -1/8"	36"	36 3/16"	Acc	[illegible]
	" B		± 1/32	14"	13.970	Acc	
	" C		MIN	6"	6 1/32"	Acc	
	" D		± 1/32"	2"	2.005	Acc	
	" E				2.01	Acc	
	" F				1.98	Acc	
	" G			3 1/2"	3.505	Acc	
	" H			7"	7.000	Acc	
	" I			6"	6.01	Acc	
	" J			10"	10.000	Acc	
	" K			14"	13.99	Acc	
	" L			3"	3.00	Acc	
	" M				2.97	Acc	
	" N			3"	3.00	Acc	
	" O				3.03	Acc	
	HOLE 1+2		± .005	3/8	.375	Acc	
	" 3+4				.375	Acc	
	CLADING.		± 1/8	1/4"	.20/.25	Acc	
	FINISH.			125	125	Acc	
	HOLES TO SURFACE		± .010	.000	000	Acc	

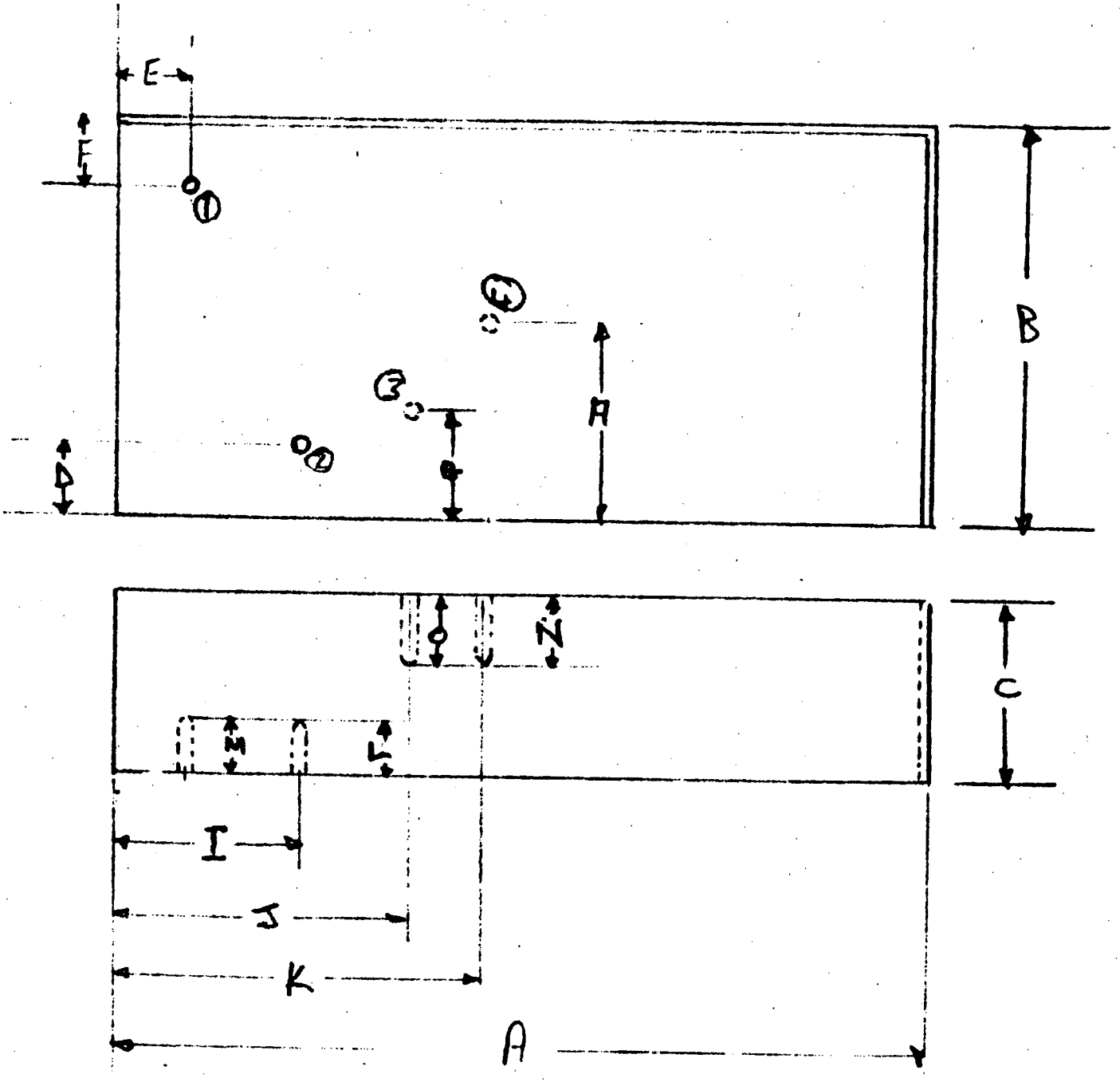
E
F
D
B
A
C
N
M
L
I
J
K
A

QUALITY CONTROL

DIMENSIONAL INSPECTION REPORT

OPS ORDER NO. A-205 WORK ORDER NO. 80-125 QUALITY LEVEL QLS - SPECIAL

DRAWING NO. N/A SKETCH ATT

MEASURING EQUIPMENT USED 6' SCALE 12" + 6" VERNIERS

1-29-81

W.O. OPER. NO.	LOCATION DESCRIPTION	PIN/QAN	TOL.	DIMENSION REQ.	ACTUAL	DISP.	BY
120	DIM A	N/A	+1" -1/16"	36"	36.31	Acc	[illegible]
	" B		+1/32 -1/32	14"	13.985	Acc	
	" C		MIN	6"	6"	Acc	
	" D		+1/32 -1/32	2"	1.98	Acc	
	" E				2.00	Acc	
	" F				1.98	Acc	
	" G			3½"	3.48	Acc	
	" H			7"	7.005	Acc	
	" I			6"	6.01	Acc	
	" J			10"	10.01	Acc	
	" K			14"	14.00	Acc	
	" L			3"	2.98	Acc	
	" M				2.97	Acc	
	" N			3"	2.98	Acc	
	" O				3.00	Acc	
	HOLE 1+2		+.005 -.005	3/8"	.375	Acc	
	" 3+4				.375	Acc	
	CLADING.		+1/8 -1/8	1/4"	.2/.3	Acc	
	FINISH.			125	63	Acc	
	4 HOLE ⊥ TO SURFACE		+.010 -.010	.000	.000	Acc	

QUALITY CONTROL
DIMENSIONAL INSPECTION REPORT

OPS ORDER NO. A-205 WORK ORDER NO. 80-125 QUALITY LEVEL QLS
DRAWING NO. N/A SKETCH ATT
MEASURING EQUIPMENT USED 6' SCALE 24" & 12" & 6" VERNIERS

2-9-81

W.O. OPER. NO.	LOCATION DESCRIPTION	PIN/QAN	DIMENSION TOL.	DIMENSION REQ.	DIMENSION ACTUAL	DISP.	BY
131	DIM A	N/A	+1" -1/8	36"	36.2	Acc	Roger Kirtt
	" B		± 1/32"	14"	13.97	Acc	
	" C		MIN	6"	6.02	Acc	
	" D		± 1/32"	2"	2.005	Acc	
	" E				2.01	Acc	
	" F				1.97	Acc	
	" G			3 1/2"	3.49	Acc	
	" H			7"	7.01	Acc	
	" I			6"	6.00	Acc	
	" J			10"	10.01	Acc	
	" K			14"	13.99	Acc	
	" L			3"	3.00	Acc	
	" M				2.97	Acc	
	" N				2.985	Acc	
	" O				3.00	Acc	
	HOLES 1+2		±.005	3/8"	.375	Acc	
	" 3+4				.375	Acc	
	CLADING		± 1/8"	1/4"	.19/.25	Acc	
	FINISH		~~MAX~~	125	125	Acc	
	4 HOLE ∅ T.S. SPACE		±.010	.000	000	Acc	

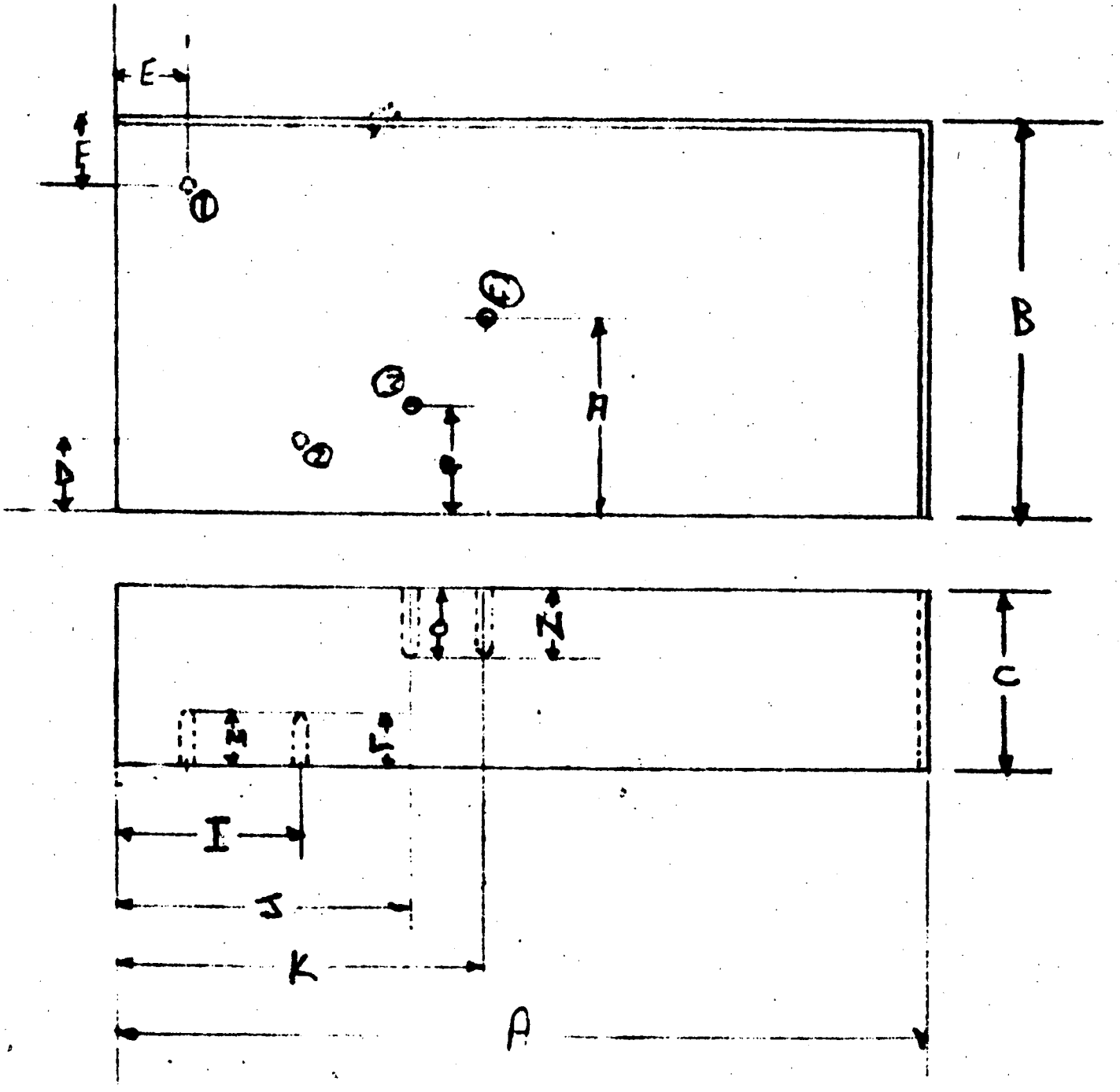
E
E
D
B
A
C
N
M
L
I
J
K
A

QUALITY CONTROL
DIMENSIONAL INSPECTION REPORT

OPS ORDER NO. A-205 WORK ORDER NO. 80-125 QUALITY LEVEL QLS Special
DRAWING NO. N/A SKETCH ATT.
MEASURING EQUIPMENT USED 6' SCALE 12+24 VERNIER 0-1 MIC HOLE GAGE

2-16-81

W.O. OPER. NO.	LOCATION DESCRIPTION	PIN/QAN	DIMENSION TOL.	DIMENSION REQ.	DIMENSION ACTUAL	DISP.	BY
1&1	Dim A	N/A	$+1''$ $-\frac{1}{8}$	28"	28.39	Acc	Roger Kimball
	" B		MIN	6"	6.03	Acc	
	" C		$\pm\frac{1}{32}''$	9"	8.97	Acc	
	" D			↓	9.02	Acc	
	" E			$2\frac{1}{4}''$	2.25	Acc	
	" F			$4\frac{1}{2}''$	4.50	Acc	
	" G			$6\frac{3}{4}''$	6.75	Acc	
	" H			$2\frac{1}{4}''$	2.25	Acc	
	" I			$4\frac{1}{2}''$	4.50	Acc	
	" J			$6\frac{3}{4}''$	6.75	Acc	
	" K TYP.			$4\frac{1}{2}''$	4.50	Acc	
	" L			$2\frac{1}{4}''$	2.22	Acc	
	" M			$4\frac{1}{2}''$	4.47	Acc	
	" N		↓	$6\frac{3}{4}''$	6.72	Acc	
	" O		$\pm.005$	.180	.180	Acc	
	" P		↓	↓	.175	Acc	
	" Q		$\pm\frac{1}{32}$	2"	2.02	Acc	
	" R1		$\pm\frac{1}{8}$	3"	3.125	Acc	
	" S TYP		$+\frac{1}{32}$	↓	3.03	Acc	
	" T "			$\frac{1}{4}''$	$\frac{1}{4}''$	Acc	
↓	" U		↓	$\frac{1}{2}''$	$\frac{1}{2}''$	Acc	↓

QUALITY CONTROL
DIMENSIONAL INSPECTION REPORT

OPS ORDER NO. A-205 WORK ORDER NO. EC-125 QUALITY LEVEL QLS
DRAWING NO. N/A SKETCH ATT
MEASURING EQUIPMENT USED GAME

2-16-81

W.O. OPER. NO.	LOCATION DESCRIPTION	PIN/QAN	DIMENSION TOL.	DIMENSION REQ.	DIMENSION ACTUAL	DISP.	BY
141	DIM V	N/A	± 1/32	2"	2.00	Acc	Roger Smith
	Hole No 1		±.005	3/8	.375	Acc	
	" " 2				.376	Acc	
	" " 3				.375	Acc	
	" " 4				.375	Acc	
	" " 5				.375	Acc	
	" " 6				.375	Acc	
	" " 7			1/8"	.129	Acc	
	" " 8				.129	Acc	
	DIM Ra		± 1/8	3.00	3.00	Acc	
	All Hole ⊥ to Surface		±.010	000	004/007	Acc	

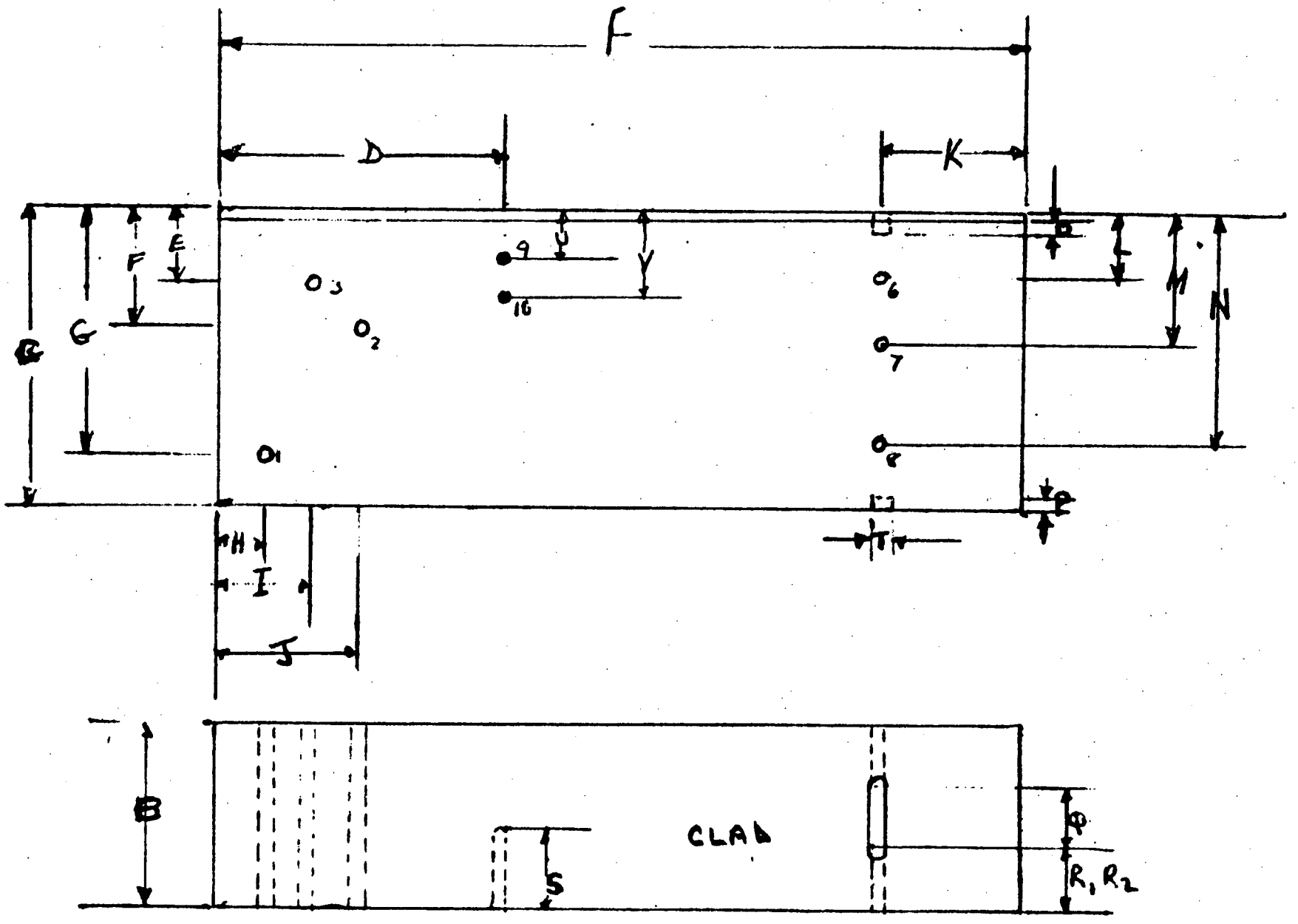
F
D
K
E
F
G
B
H
I
J
U
V
9
16
O3
O2
O1
O6
O7
O8
L
M
N
P
T
B
S
CLAD
Φ
R1 R2

NSD PA1011

Nuclear Service Division

SUPPLIER QUALITY RELEASE

① SUPPLIER ~~OFFSHORE POWER SYSTEMS~~ QR- S 1166

PURCHASE ORDER ①	PART NAME ①	DRAWING & REV. ②
544-MXK-406247-RN	INSPECTION BLOCKS	N/A

PAR NO. ③	CHG. NOTICE NO. ③	P.O. ITEM NO. ③	QTY. ON ORDER ④	QTY. RELEASED ⑤
-	002	001	4	4

PROJECT AND SHOP ORDER ①	E. SPEC. NO. ①	ORDER ⑥
A-205		COMPLETE ☒ YES ☐ NO

SERIAL OR IDENTIFICATION NOS. ⑥

Four (4) Inspection Calibration Blocks:

INT-39 KRK-RV-1 IPP-39

INT-39 KRK-RV-1 POR-1-10-5

The equipment shown hereon is released by our QC Department. Where indicated by a check mark (✓), records and data have been reviewed and approved. Records of objective edivence are on file and subject to Westinghouse Review. Non applicable items are lined out.

AUDIT CHECKLIST ⑦

☒ Material Certifications	☐ ~~Non Operating Electrical Tests~~
☒ Heat Treat Records	☐ ~~Operating Electrical Test~~
☐ ~~RT Film and Records~~	☐ ~~Pressure Test~~
☒ PT/MT Records	☐ ~~Seat Tightness Test~~
☒ Visual	☐ ~~Performance Test~~
☒ Dimensional	☒ Cleanliness
☒ UT Records	☐ ~~Packaging~~
☒ Personnel Qualification: Welding, NDT	☐ ~~Code Form~~
☐	☐ ~~Painting~~
☐	☐

DEVIATION NOTICES AND REMARKS (ALL DEVIATIONS HAVE BEEN APPROVED BY THE RESPONSIBLE WESTINGHOUSE ENGINEER UNLESS A SPECIFIC EXCEPTION IS STATED.) ⑧

NONE.

WE CERTIFY THAT FOR THE EQUIPMENT AND MATERIAL RELEASED, ALL CONTRACTUAL REQUIREMENTS HAVE BEEN MET. APPROVED DEVIATIONS, IF ANY, ARE LISTED ABOVE.

⑨ SUPPLIER SIGNATURE [illegible] TITLE Mgr QC DATE [illegible]

SUPPLIER (ATTACH TO SHIPPING PAPERS)