ATTACHMENT I

IPN-89-062

Final Weld and Component Inservice
Examination Report Cycle 6/7 Refueling Outage
Second 10-Year Interval

NEWYORK POWER AUTHORITY
INDIAN POINT 3 NUCLEAR POWER PLANT
DOCKET NO. 50-286
DPR-64

8910240303 891012
PDR ADOCK 05000286
Q PNU

Inservice Examination Report

of the

INDIAN POINT UNIT NO. 3 NUCLEAR POWER STATION

P.O. Box 215

Buchanan, New York 10511

For

New York Power Company

123 Main Street

White Plains, New York 10601

Commercial Service Date: August 30, 1976

Operating Capacity: 965 MWe

2nd Outage; 1st Period; 2nd Interval

Report Date: July, 1989

Prepared by:

WESTINGHOUSE ELECTRIC CORPORATION
Nuclear Services Division
Inspection Service
P. O. Box 355
Pittsburgh, Pennsylvania 15230-0355

ID:0582b/60889:50

FORM NIS-1, OWNER'S DATA REPORT
FOR INSERVICE INSPECTIONS
AS REQUIRED BY THE PROVISIONS OF THE ASME CODE RULES

1. OWNER - NEW YORK POWER AUTHORITY, 123 MAIN STREET, WHITE PLAINS, NEW YORK 10601
2. PLANT - INDIAN POINT, P.O. BOX 215, BROADWAY AND BLEAKLEY, BUCHANAN, NEW YORK 10511
3. PLANT UNIT - No. 3
4. OWNER CERTIFICATE OF AUTHORIZATION - N/A
5. COMMERCIAL SERVICE DATE - AUGUST 30, 1976
6. NATIONAL BOARD NUMBER FOR UNIT - N/A
7. COMPONENTS INSPECTED -

COMPONENT OR APPURTENANCE	MANUFACTURER OR INSTALLER	MANUFACTURER OR INSTALLER SERIAL NO.	STATE OR PROVINCE NO.	NATIONAL BOARD NO.
Reactor Vessel	Combustion Eng.	66102	--	20758
Pressurizer	Westinghouse	0011	--	68-42
Replacement Steam Generator 31	Westinghouse NCD	11465	--	41
Replacement Steam Generator 32	Westinghouse NCD	11466	--	42
Replacement Steam Generator 33	Westinghouse NCD	11467	--	43
Replacement Steam Generator 34	Westinghouse NCD	11468	--	44
Class 1 Piping	Cameron Iron Works	--	--	--
Reactor Coolant Pump 31	Westinghouse	RCPCPC-01	--	--

FORM NIS-1, OWNER'S DATA REPORT
FOR INSERVICE INSPECTIONS
AS REQUIRED BY THE PROVISIONS OF THE ASME CODE RULES

1. OWNER - NEW YORK POWER AUTHORITY, 123 MAIN STREET, WHITE PLAINS, NEW YORK 10601

2. PLANT - INDIAN POINT, P.O. BOX 215, BROADWAY AND BLEAKLEY, BUCHANAN, NEW YORK 10511

3. PLANT UNIT - No. 3

4. OWNER CERTIFICATE OF AUTHORIZATION - N/A

5. COMMERCIAL SERVICE DATE - AUGUST 30, 1976

6. NATIONAL BOARD NUMBER FOR UNIT - N/A

7. COMPONENTS INSPECTED -

COMPONENT OR APPURTENANCE	MANUFACTURER OR INSTALLER	MANUFACTURER OR INSTALLER SERIAL NO.	STATE OR PROVINCE NO.	NATIONAL BOARD NO.
Reactor Coolant Pump 32	Westinghouse	RCPCPC-02	--	--
Reactor Coolant Pump 33	Westinghouse	RCPCPC-03	--	--
Reactor Coolant Pump 34	Westinghouse	RCPCPC-04	--	--
Regenerative Heat Exchanger	Sentry Equipment	4195	--	--
Residual Heat Exchanger 31	Atlas Industrial	807	--	660
Residual Heat Exchanger 32	Atlas Industrial	808	--	661
Seal Water Heat Exchanger	Atlas Industrial	812	--	665
Non-Regenerative Letdown Heat Exchanger	Atlas Industrial	831	--	682
Excess Letdown Heat Exchanger	Atlas Industrial	848	--	699

FORM NIS-1, OWNER'S DATA REPORT
FOR INSERVICE INSPECTIONS
AS REQUIRED BY THE PROVISIONS OF THE ASME CODE RULES

1. OWNER - NEW YORK POWER AUTHORITY, 123 MAIN STREET, WHITE PLAINS, NEW YORK 10601
2. PLANT - INDIAN POINT, P.O. BOX 215, BROADWAY AND BLEAKLEY, BUCHANAN, NEW YORK 10511
3. PLANT UNIT - No. 3
4. OWNER CERTIFICATE OF AUTHORIZATION - N/A
5. COMMERCIAL SERVICE DATE - AUGUST 30, 1976
6. NATIONAL BOARD NUMBER FOR UNIT - N/A
7. COMPONENTS INSPECTED -

COMPONENT OR APPURTENANCE	MANUFACTURER OR INSTALLER	MANUFACTURER OR INSTALLER SERIAL NO.	STATE OR PROVINCE NO.	NATIONAL BOARD NO.
Volume Control Tank	Reynolds Mfg.	2-86-112	--	--
Accumulator Tank 31	Delta Southern	--	--	--
Accumulator Tank 32	Delta Southern	41046-69-2	--	2400
Accumulator Tank 33	Delta Southern	--	--	--
Accumulator Tank 34	Delta Southern	--	--	--
Boron Injection Tank	Joseph Oats & Sons	1941	--	454
Seal Water Injection Filter 31	Commercial Filters	16918-1319	--	1009
Seal Water Injection Filter 32	Commercial Filters	16918-1320	--	1010

FORM NIS-1, OWNER'S DATA REPORT
FOR INSERVICE INSPECTIONS
AS REQUIRED BY THE PROVISIONS OF THE ASME CODE RULES

1. OWNER - NEW YORK POWER AUTHORITY, 123 MAIN STREET, WHITE PLAINS, NEW YORK 10601
2. PLANT - INDIAN POINT, P.O. BOX 215, BROADWAY AND BLEAKLEY, BUCHANAN, NEW YORK 10511
3. PLANT UNIT - No. 3
4. OWNER CERTIFICATE OF AUTHORIZATION - N/A
5. COMMERCIAL SERVICE DATE - AUGUST 30, 1976
6. NATIONAL BOARD NUMBER FOR UNIT - N/A
7. COMPONENTS INSPECTED -

COMPONENT OR APPURTENANCE	MANUFACTURER OR INSTALLER	MANUFACTURER OR INSTALLER SERIAL NO.	STATE OR PROVINCE NO.	NATIONAL BOARD NO.
Reactor Coolant Filer	Commercial Filters	--	--	--
Seal Water Return Filter	Cuno Engineering	CSFLSW-01	--	--
Class 2 Piping	--	--	--	--
RHR Pump 31	Ingersoll Rand	--	--	--
RHR Pump 32	Ingersoll Rand	--	--	--
Charging Pump 31	Union Pump Company	--	--	--
Charging Pump 32	Union Pump Company	--	--	--
Charging Pump 33	Union Pump Company	--	--	--
Safety Injection Pump 31	Pacific Pump	--	--	--

FORM NIS-1, OWNER'S DATA REPORT
FOR INSERVICE INSPECTIONS
AS REQUIRED BY THE PROVISIONS OF THE ASME CODE RULES

1. OWNER - NEW YORK POWER AUTHORITY, 123 MAIN STREET, WHITE PLAINS, NEW YORK 10601
2. PLANT - INDIAN POINT, P.O. BOX 215, BROADWAY AND BLEAKLEY, BUCHANAN, NEW YORK 10511
3. PLANT UNIT - No. 3
4. OWNER CERTIFICATE OF AUTHORIZATION - N/A
5. COMMERCIAL SERVICE DATE - AUGUST 30, 1976
6. NATIONAL BOARD NUMBER FOR UNIT - N/A
7. COMPONENTS INSPECTED -

COMPONENT OR APPURTENANCE	MANUFACTURER OR INSTALLER	MANUFACTURER OR INSTALLER SERIAL NO.	STATE OR PROVINCE NO.	NATIONAL BOARD NO.
Safety Injection Pump 32	Pacific Pump	--	--	--
Safety Injection Pump 33	Pacific Pump	--	--	--
Class 3 Piping	--	--	--	--
Component Cooling Heat Exchanger 31	American Standard	--	--	--
Component Cooling Heat Exchanger 32	American Standard	--	--	--
Diesel Generator 31	Alco Products	--	--	--
Diesel Generator 32	Alco Products	--	--	--
Diesel Generator 33	Alco Products	--	--	--

FORM NIS-1, OWNER'S DATA REPORT
FOR INSERVICE INSPECTIONS
AS REQUIRED BY THE PROVISIONS OF THE ASME CODE RULES

1. OWNER - NEW YORK POWER AUTHORITY, 123 MAIN STREET, WHITE PLAINS, NEW YORK 10601
2. PLANT - INDIAN POINT, P.O. BOX 215, BROADWAY AND BLEAKLEY, BUCHANAN, NEW YORK 10511
3. PLANT UNIT - No. 3
4. OWNER CERTIFICATE OF AUTHORIZATION - N/A
5. COMMERCIAL SERVICE DATE - AUGUST 30, 1976
6. NATIONAL BOARD NUMBER FOR UNIT - N/A
7. COMPONENTS INSPECTED -

COMPONENT OR APPURTENANCE	MANUFACTURER OR INSTALLER	MANUFACTURER OR INSTALLER SERIAL NO.	STATE OR PROVINCE NO.	NATIONAL BOARD NO.
Nuclear Service Water Pump 31	Ingersoll Rand	--	--	--
Nuclear Service Water Pump 32	Ingersoll Rand	--	--	--
Nuclear Service Water Pump 33	Ingersoll Rand	--	--	--
Conventional Service Water Pump 34	Ingersoll Rand	--	--	--
Conventional Service Water Pump 35	Ingersoll Rand	--	--	--
Conventional Service Water Pump 36	Ingersoll Rand	--	--	--

FORM NIS-1, OWNER'S DATA REPORT
FOR INSERVICE INSPECTIONS
AS REQUIRED BY THE PROVISIONS OF THE ASME CODE RULES

1. OWNER - NEW YORK POWER AUTHORITY, 123 MAIN STREET, WHITE PLAINS, NEW YORK 10601

2. PLANT - INDIAN POINT, P.O. BOX 215, BROADWAY AND BLEAKLEY, BUCHANAN, NEW YORK 10511

3. PLANT UNIT - No. 3

4. OWNER CERTIFICATE OF AUTHORIZATION - N/A

5. COMMERCIAL SERVICE DATE - AUGUST 30, 1976

6. NATIONAL BOARD NUMBER FOR UNIT - N/A

7. COMPONENTS INSPECTED -

COMPONENT OR APPURTENANCE	MANUFACTURER OR INSTALLER	MANUFACTURER OR INSTALLER SERIAL NO.	STATE OR PROVINCE NO.	NATIONAL BOARD NO.
Nuclear Service Water Pump 31 Strainer	Zurn Industries	--	--	--
Nuclear Service Water Pump 32 Strainer	Zurn Industries	--	--	--
Nuclear Service Water Pump 33 Strainer	Zurn Industries	--	--	--
Spent Fuel Pit Heat Exchanger 31	Joseph Oats & Sons	1598-2	--	267
Recirculation Fan Cooler 31	Westinghouse	--	--	--
Recirculation Fan Cooler 32	Westinghouse	--	--	--
Recirculation Fan Cooler 33	Westinghouse	--	--	--

FORM NIS-1 (back)

8. Examination Dates 9-30-88 to 6-18-89

9. Inspection Interval from 8-30-86 to 8-30-96

10. Abstract of Examinations Include a list of examinations and a statement concerning status of work required for current interval. Reference Tab C

11. Abstract of Conditions Noted Reference Tab B and Tab F

12. Abstract of Corrective Measures Recommended and Taken Reference Tab B and Tab F

We certify that the statements made in this report are correct and the examinations and corrective measures taken conform to the rules of the ASME Code, Section XI.

Date 9/13/89 19 89 Signed New York Power Authority (Owner) By [illegible]

Certificate of Authorization No. (if applicable) _____ Expiration Date _____

CERTIFICATE OF INSERVICE INSPECTION

I, the undersigned, holding a valid commission issued by the National Board of Boiler and Pressure Vessel Inspectors and/or the State or Province of NEW YORK and employed by H.S.B. I&I CO. of HARTFORD, CT. have inspected the components described in this Owners Data Report during the period 2-1-89 to 6-5-89, and state that to the best of my knowledge and belief, the Owner has performed examinations and taken corrective measures described in this Owners Data Report in accordance with the requirements of the ASME Code, Section XI.

By signing this certificate neither the Inspector nor his employer makes any warranty, expressed or implied, concerning the examinations and corrective measures described in this Owners Data Report. Furthermore, neither the Inspector nor his employer shall be liable in any manner for any personal injury or property damage or a loss of any kind arising from or connected with this inspection.

Date 10-5 19 89

[illegible] Commissions NB 10011 I.N.

Inspectors Signature — National Board, State, Province and No.

NEW YORK POWER AUTHORITY
INDIAN POINT UNIT NO. 3 NUCLEAR POWER PLANT
2ND OUTAGE: 1ST PERIOD: 2ND INTERVAL
EXAMINATION SUMMARY
1989

INTRODUCTION

The following items were examined by Westinghouse Electric Corporation Nuclear Services Division - Inspection Services for Indian Point Unit No. 3 Nuclear Power Plant on September 30, 1988 and from February 2, 1989 thru June 18, 1989.

1. Reactor Vessel
2. Reactor Vessel Internals
3. Class 1 and Class 2 Piping and Components
4. Class 1, 2 and 3 Component and Piping Supports
5. Class 1 Valves
6. Reactor Coolant Pumps
7. Reactor Coolant Pump Flywheel per USNRC Regulatory Guide 1.14
8. Preservice Examinations on Replacement Steam Generators Nozzle to Safe End Butt Welds and Supports and Class 1 and Class 2 Piping Welds installed during the Steam Generator Replacement Program

The following items were examined by New York Power Authority - Indian Point Unit No. 3 site personnel.

1. Class 1 System Leakage Tests
2. Class 2 System leakage Tests
3. Class 3 System Leakage Tests

The above listed items were examined in accordance with an approved Program Plan located under Tab C of the Final Report.

Examinations this outage were conducted to:

1. Perform Inservice Balance of Plant Examinations for completing the 1st 3 1/3 Year Period of the 2nd Ten year Interval per the requirements of the ASME Boiler and Pressure Vessel Code Section XI - 1983 Edition up to and including Summer 1983 Addenda and Indian Point Unit No. 3 Weld and Support ISI Program.

2. Perform Preservice Balance of Plant Examinations in Support of the Steam Generator Replacement Program. Examinations included the following and were performed to meet the requirements of the ASME Boiler and Pressure Vessel Code Section XI - 1983 Edition up to and including Summer 1983 Addenda and Indian Point Unit No. 3 Weld and Support ISI Program.

   A. Steam Generator Nozzle to Safe End Butt Welds
   B. Class 1 Reactor Coolant Pipe
   C. Class 1 RTD Piping
   D. Class 2 Mainsteam and Feedwater Piping
   E. Steam Generator Supports

3. Perform examination of Reactor Coolant Pump Flywheel per requirements of USNRC Regulatory Guide 1.14 and Indian Point Unit No. 3 Weld and Support ISI Program.

Examination procedures were approved prior to the start of examinations and certification documents relative to personnel, equipment and materials were reviewed and determined to be satisfactory. Inspection, witnessing and surveillance of the examinations were conducted by personnel from: United States Nuclear Regulatory Commission, Hartford Steam Boiler Inspection and Insurance Company and New York Power Authority Quality Assurance Department.

Balance of Plant Results

Examinations resulted in a total of one hundred and two (102) recordable indications being noted on the basis of Westinghouse Nuclear Services Division - Inspection Services procedure recording criteria which are generally more critical than ASME Boiler and Pressure Vessel Code Section XI-1983 Edition up to and including Summer 1983 Acceptance Standards.

A Summary of the indications are as follows:

A. Four (4) indications were recorded during ultrasonic examinations. One (1) indication recorded on the Pressurizer was evaluated and accepted by New York Power Authority. Two (2) indications on the Seal Water Injection Filters and One (1) indication on Loop 33 18" Feedwater were evaluated and accepted by Westinghouse Electric Corporation and approved by New York Power Authority per the Acceptance Standards of ASME Boiler and Pressure Vessel Code Section XI-1983 Edition up to and including Summer 1983 Addenda.

B. Twenty three (23) indications were recorded during surface examinations. These indications were evaluated by Westinghouse Electric Corporation and New York Power Authority and found either:

   1. Acceptable by ASME Boiler and Pressure Vessel Code Section XI-1983 Edition up to and including Summer 1983 Addenda.

   2. Unacceptable by ASME Boiler and Pressure Vessel Code Section XI-1983 Edition up to and including Summer 1983 Addenda in which case indications were repaired, re-examined and found acceptable to procedure recording criteria by New York Power Authority Quality Assurance Department.

C. Seventy Five (75) indications were recorded during visual examinations. These indications were evaluated by New York Power Authority Engineering Department and either accepted as is or repaired and re-examined and accepted by procedure recording criteria by New York Power Authority Quality Assurance Department.

Specific data relative to the above indications including dispositions, DCAR's and Acceptance Standards are located under Tab D and Tab F of the final report.

Phillip E. Bukes

Phillip E. Bukes, Westinghouse NSD
ISI Coordinator

/lg

Examination Program Plan
for
New York Power Company
Indian Point Unit No.3
2nd Outage; 1st Period; 2nd Interval
1989

This document details the proposed planned scope of examination by Westinghouse NSD - Inspection Service for the 2nd Outage, 1st Period, 2nd Interval, including items and areas selected for examination, examination and documentation procedures and sketches containing identifications of all areas to be examined.

Qualification of examiners, materials and equipment will be available on site prior to the start of examinations.

Efforts should be made to provide access to all planned examinations, however, due to circumstances such as environment, access, radiation levels, etc., some variations may occur.

This program and the procedures incorporated herein require approval of New York Power Company and the Authorized Inspector prior to the start of examination.

Prepared by: Westinghouse Electric Corporation

W Approval: Phillip E. Bukes 2-2-89
Site Coordinator Date

New York Power Company Approval: [illegible] [illegible]
Date

Title: [illegible]

Authorized Inspector Review: [illegible] 5-1-89
Date

Agency: H.S.B. I.I Co.

ID:0585:/71588:50-1

NEW YORK POWER AUTHORITY
INDIAN POINT UNIT NO. 3
2ND OUTAGE; 1ST PERIOD; 2ND INTERVAL
INSERVICE EXAMINATION PROGRAM
1989

All items listed below were examined, as indicated, in accordance with the requirements of the ASME Boiler and Pressure Vessel Code Section XI-1983 Edition up to and including Summer 1983 Addenda, NRC Regulatory Guide 1.14 and Plant Technical Specification to the extent practical with the access provided and the limitations of component geometry.

Program Item	IWB-2500-1 Reference	Area and Extent of Examination	Examination Procedure			Sketch Reference
			Vol.	Surf.	Vis	
		Reactor Vessel				
1.	B1.22	Closure Head Meridional Weld 2-0" to 12" from 0 Reference (adjacent Weld 1)	47	--	--	1-1300
2.	B1.22	Closure Head Meridional Weld 7-0" to 26" from 0 Reference (adjacent Weld 1)	47	--	--	1-1300
3.	B1.40	Closure Head to Flange Weld 1-Centerline of Stud Hole 1 Clockwise to centerline of Stud Hole 18	47	70	--	1-1300
4.	B6.10	Closure Head Nuts-1 thru 18	--	70	--	1-1400
5.	B6.30	Closure Head Studs - 1 thru 18	115	70	--	1-1400
6.	B6.50	Closure Head Washers - 1 thru 18	--	--	8	1-1400
7.	B7.80	Conoseal Bolting - Assembly #74	--	--	8	1-1300
8.	B13.10	Reactor Vessel Internals - Reference Program Appendix F of ISI-88	--	--	88	1-1200
9.	B15.10	Pressure Retaining Boundary	--	--	(1)	(1)
		Pressurizer				
10.	B2.11	Circumferential Weld 1-0" clockwise to 100" from 0 reference (adjacent weld 2)	47	--	--	1-2100

Program Item	IWB-2500-1 Reference	Area and Extent of Examination	Examination Procedure Vol.	Surf.	Vis	Sketch Reference
		Pressurizer (Cont'd)				
11.	B2.11	Circumferential Weld 17	--	--	(4)	(4)
12.	B2.12	Longitudinal Weld 2 - 20" to 24" from 0 reference (adjacent weld 1)	47	--	--	1-2100
13.	B2.12	Longitudinal Weld 16	--	--	(4)	(4)
14.	B3.120	Nozzle Inside Radius Section - 20IR, 21IR, 22IR, 23IR, 24IR and 25IR	--	--	(4)	(4)
15.	B5.40	14" Pressurizer Surge Nozzle to Safe End Butt Weld - 1(DM)	206	11	--	1-4500
16.	B5.40	6" Pressurizer Safety Nozzle to Safe End Butt Weld - 1(DM)	206	11	--	1-4502
17.	B7.20	Manway Bolting -B1 thru B5	--	--	8	1-2100
18.	B8.20	Pressurizer Skirt Integrally Welded Attachment 18-0" clockwise to 100" from 0 reference (adjacent weld 19)	206	--	--	1-2100
19.	B8.20	Pressurizer Skirt Integrally Welded Attachment -19 (0" to 10" from 0 Reference (adjacent Weld 18)	206	--	--	1-2100
20.	B15.20	Pressure Retaining Boundary	--	--	(1)	(1)
		Replacement Steam Generator 31				
21.	B5.70	Nozzle to Safe End Butt Welds 5(DM) and 6(DM)	206(5)	11(5)	--	1-4100
22.	B15.30	Pressure Retaining Boundary	--	--	(1)	(1)
		Replacement Steam Generator 32				
23.	B5.70	Nozzle to Safe End Butt Welds 5(DM) and 6(DM)	206(5)	11(5)	--	1-4200
24.	B15.30	Pressure Retaining Boundary	--	--	(1)	(1)

Program Item	IWB-2500-1 Reference	Area and Extent of Examination	Examination Procedure			Sketch Reference
			Vol.	Surf.	Vis	
		Replacement Steam Generator 33				
25.	B5.70	Nozzle to Safe End Butt Welds 5(DM) and 6(DM)	206(5)	11(5)	--	1-4300
26.	B15.30	Pressure Retaining Boundary	--	--	(1)	(1)
		Replacement Steam Generator 34				
27.	B5.70	Nozzle to Safe End Butt Welds 5(DM) and 6(DM)	206(5)	11(5)	--	1-4400
28.	B15.30	Pressure Retaining Boundary	--	--	(1)	(1)
		Pressure Retaining Bolting				
29.	B7.50	Loop 31 1 1/2" Seal Injection Flange A - 4 Studs and 8 Nuts	--	--	8	1-4108
30.	B7.50	6" Pressurizer Safety-Flange A-12 Studs and 24 Nuts	--	--	8	1-4501
31.	B7.50	6" Pressurizer Safety-Flange A-12 Studs and 24 Nuts	--	--	8	1-4502
		Circumferential Pipe Welds				
32.	B9.11	Loop 31 Reactor Coolant Pipe-12	206	11	--	1-4100
33.	B9.11	Loop 32 Reactor Coolant Pipe-4	206(5)	11(5)	--	1-4200
34.	B9.11	Loop 32 Reactor Coolant Pipe-13	206	11	--	1-4200
35.	B9.11	Loop 32 14" RHR Hotleg Take-off-18, 19 & 20	206	11	--	1-4201
36.	B9.11	14" Pressurizer Surge - 2	206	11	--	1-4500
37.	B9.11	Loop 31 10" Accumulator Discharge - 3, 4 and 5	206	11	--	1-4101
38.	B9.11	Loop 32 10" Accumulator Discharge - 4 and 6	206	11	--	1-4202
39.	B9.11	6" Pressurizer Safety - 2 and 3	206	11	--	1-4502
40.	B9.11	4" Pressurizer Relief - 3, 4 and 5	206	11	--	1-4505

Program Item	IWB-2500-1 Reference	Area and Extent of Examination	Examination Procedure			Sketch Reference
			Vol.	Surf.	Vis	
		Longitudinal Pipe Welds				
41.	B9.12	Loop 31 Reactor Coolant Pipe - 19 and 20	(2)	11	--	1-4100
		Circumferential Pipe Welds				
42.	B9.21	Loop 31 3" Letdown - 3 and 4	--	11	--	1-4103
43.	B9.21	Loop 31 3" RTD Return - 11	--	11(5)	--	1-4104
44.	B9.21	Loop 32 3" RTD Return - 11	--	11(5)	--	1-4204
45.	B9.21	Loop 33 3" RTD Return - 11	--	11(5)	--	1-4303
46.	B9.21	Loop 34 3" RTD Return - 11	--	11(5)	--	1-4403
47.	B9.21	3" Pressurizer Relief-13 and 14	--	11	--	1-4505
48.	B9.21	3" Pressurizer Spray-9, 10 and 23	--	11	--	1-4507
		Branch Pipe Connections				
49.	B9.31	Loop 31 10" Accumulator Discharge 16 (BC)	206	11	--	1-4101
50.	B9.32	Loop 31 3" Letdown - 1(BC)	--	11	--	1-4103
51.	B9.32	Loop 31 3" RTD Return 12 (BC)	--	11	--	1-4104
		Socket Welds				
52.	B9.40	Loop 31 2" SIS-17 and 18	--	11	--	1-4101
53.	B9.40	Loop 31 2" SIS Hotleg-7, 8, 9, 10, 11, 12, 13, 14 and 15	--	11	--	1-4102
54.	B9.40	Loop 31 2" Drain - 15, 16, 17 18 and 19	--	11	--	1-4103
55.	B9.40	Loop 31 2" RTD - 2	--	11(5)	--	1-4106
56.	B9.40	Loop 31 1 1/2" SIS Coldleg - 5, 6, 7, 8 and 26	--	11	--	1-4107

Program Item	IWB-2500-1 Reference	Area and Extent of Examination	Examination Procedure			Sketch Reference
			Vol.	Surf.	Vis	
		Socket Welds Cont'd				
57.	B9.40	Loop 31 2" Seal Injection 1, 2, 3, 4 & 5	--	11	--	1-4108
58.	B9.40	Loop 32 2" RTD - 2	--	11(5)	--	1-4206
59.	B9.40	Loop 32 1 1/2" SIS Coldleg - 5 6, 7 and 8	--	11	--	1-4207
60.	B9.40	Loop 32 2" Drain - 3, 4, 5 & 6	--	11	--	1-4209
61.	B9.40	Loop 33 2" RTD - 2	--	11(5)	--	1-4305
62.	B9.40	Loop 34 2" RTD - 2	--	11(5)	--	1-4405
		Integrally Welded Attachments				
63.	B10.10	Loop 32 10" Accumulator Discharge - PWR-4B	--	11	--	1-4202
		Piping				
64.	B15.50	Pressure Retaining Boundary	--	--	(1)	(1)
		Reactor Coolant Pump 31				
65.	B6.180	Main Flange Studs - 31-B1 thru 31-B9 and 31-B12 thru 31-B24	115	--	--	1-5100
66.	B6.200	Main Flange Nuts - 31-B1 thru 31-B24	--	--	8	1-5100
67.	B7.60	No. 1 Seal Housing Bolts - 31-B1 thru 31-B18	--	--	8	1-5100
68.	B10.20	Integrally Welded Attachment - 31-1SC, 31-2SC and 31-3SC	--	11	--	1-5100
69.	B15.60	Pressure Retaining Boundary	--	--	(1)	(1)
70.	--	Flywheel - Pump Motor Flywheel 31	41(6)	11(6)	--	1-5100
		Reactor Coolant Pump 32, 33 and 34				
71.	B15.60	Pressure Retaining Boundary	--	--	(1)	(1)

Program Item	IWB-2500-1 Reference	Area and Extent of Examination	Examination Procedure			Sketch Reference
			Vol.	Surf.	Vis	
		Valve Bonnet Bolting				
72.	B7.70	14" - 730- 16 Studs and 16 Nuts	--	--	8	1-4201
73.	B7.70	10" - 895A-16 Studs and 16 Nuts	--	--	8	1-4101
74.	B7.70	10" - 897A-16 Studs and 16 Nuts	--	--	8	1-4101
75.	B7.70	10" - 895B-16 Studs and 16 Nuts	--	--	8	1-4202
76.	B7.70	6" - 838A-12 Studs and 12 Nuts	--	--	8	1-4101
77.	B7.70	3"-RC535-12 Studs and 12 Nuts	--	--	8	1-4505
78.	B7.70	3"-RC536-12 Studs and 12 Nuts	--	--	8	1-4505
79.	B7.70	3" - PCV455C-6 Studs and 6 Nuts	--	--	8	1-4505
		Valves				
80.	B12.50	10"-895C - Interior Surface	--	--	8	1-4301
81.	B12.50	10"-897C - Interior Surface	--	--	8	1-4301
82.	B12.50	6"-PCV-464 - Interior Surface	--	--	8	1-4501
83.	B12.50	6"-PCV-468 - Interior Surface	--	--	8	1-4503
84.	B15.70	Pressure Retaining Boundary	--	--	(1)	(1)

Program Item	IWC-2500-1 Reference	Area and Extent of Examination	Examination Procedure			Sketch Reference
			Vol.	Surf.	Vis	
		Replacement Steam Generators 31, 32, 33 & 34				
85.	C7.10	Pressure Retaining Components	--	--	(1)	(1)
		Regenerative Heat Exchanger				
86.	C1.20	Head Circumferential Weld 9	206	--	--	2-1110
87.	C1.30	Tubesheet to Shell Weld 10	206	--	--	2-1110
88.	C7.10	Pressure Retaining Componenets	--	--	(1)	(1)

Program Item	IWC-2500-1 Reference	Area and Extent of Examination	Examination Procedure Vol.	Surf.	Vis	Sketch Reference
		Residual Heat Exchanger 31				
89.	C1.10	Shell Circumferential Weld 31-2 - 0" clockwise to 37" from 0 Reference	206	--	--	2-1120
90.	C1.20	Head Circumferential Weld 31-1-0" clockwise to 37" from 0 Reference	206	--	--	2-1120
91.	C2.31	Reinforcing Plate Weld to Nozzle 31-3	--	11	--	2-1120
92.	C2.33	Nozzle to Shell Weld 31-6	--	--	(7)	(7)
93.	C3.10	Integrally Welded Attachment 31-1WS	--	11	--	2-1120
94.	C7.10	Pressure Retaining Components	--	--	(7)	(7)
		Residual Heat Exchanger 32				
95.	C7.10	Pressure Retaining Components	--	--	(7)	(7)
		Seal Water Heat Exchanger				
96.	C1.10	Shell Circumferential Weld 2-0" Clockwise to 17" from 0 Reference	(3)	11	--	2-1130
97.	C1.20	Head Circumferential Weld 1-0" Clockwise to 17" from 0 Reference	(3)	11	--	2-1130
98.	C7.10	Pressure Retaining Components	--	--	(1)	(1)
		Non-Regenerative Letdown Heat Exchanger				
99.	C1.10	Shell Circumferential Weld 2-0" Clockwise to 24" from 0 Reference	206	--	--	2-1140
100.	C1.20	Head Circumferential Weld 1-0" Clockwise to 24" from 0 Reference	206	--	--	2-1140
101.	C7.10	Pressure Retaining Components	--	--	(1)	(1)
		Excess Letdown Heat Exchanger				
102.	C1.10	Shell Circumferential Weld 2-0" Clockwise to 10" from 0 Reference	206	--	--	2-1150

Program Item	IWC-2500-1 Reference	Area and Extent of Examination	Examination Procedure Vol.	Surf.	Vis	Sketch Reference
		Excess Letdown Heat Exchanger (Cont'd)				
103.	C1.20	Head Circumferential Weld 1-0" Clockwise to 10" from 0 Reference	206	--	--	2-1150
104.	C7.10	Pressure Retaining Components	--	--	(1)	(1)
		Volume Control Tank				
105.	C1.20	Head Circumferential Welds 1 & 2-0" Clockwise to 100" from 0 Reference	206	--	--	2-1200
106.	C7.10	Pressure Retaining Components	--	--	(1)	(1)
		Accumulator Tank 31				
107.	C7.10	Pressure Retaining Components	--	--	(1)	(1)
		Accumulator Tank 32				
108.	C1.10	Shell Circumferential Weld 32-3-0" Clockwise to 126" from 0 Reference	206	--	--	2-1210
109.	C1.20	Head Circumferential Welds 32-1 and 32-4-0" Clockwise to 126" from 0 Reference	206	--	--	2-1210
110.	C7.10	Pressure Retaining Components	--	--	(1)	(1)
		Accumulator Tanks 33 & 34				
111.	C7.10	Pressure Retaining Components	--	--	(1)	(1)
		Boron Injection Tank				
112.	C1.20	Head Circumferential Welds 1 & 2-0" Clockwise to 60" from 0 Reference	47	--	--	2-1220
113.	C2.31	Reinforcing Plate Weld to Nozzle-5	--	70	--	2-1220
114.	C2.33	Nozzle to Head Weld 3	--	--	(7)	(7)
115.	C7.10	Pressure Retaining Components	--	--	(7)	(7)

Program Item	IWC-2500-1 Reference	Area and Extent of Examination	Examination Procedure Vol.	Surf.	Vis	Sketch Reference
		Seal Water Injection Filter 31				
116.	C1.10	Shell Circumferential Weld 31-2-0" Clockwise to 12" from 0 Reference	206	--	--	2-1300
117.	C1.20	Head Circumferential Weld 31-1-0" Clockwise to 12" from 0 Reference	206	--	--	2-1300
118.	C7.10	Pressure Retaining Boundary	--	--	(1)	2-1300
		Seal Water Injection Filter 32				
119.	C7.10	Pressure Retaining Boundary	--	--	(1)	2-1300
		Reactor Coolant Filter				
120.	C1.10	Shell Circumferential Weld 2-0" Clockwise to 15" from 0 Reference	206	--	--	2-1310
121.	C1.20	Head Circumferential Welds 1 and 3- 0" Clockwise to 15" from 0 Reference	206	--	--	2-1310
122.	C7.10	Pressure Retaining Components	--	--	(1)	(1)
		Seal Water Return Filter				
123.	C1.10	Shell Circumferential Weld 2-0" Clockwise to 17" from 0 Reference	(3)	11	--	2-1320
124.	C1.20	Head Circumferential Welds 1 and 3 - 0" Clockwise to 17" from 0 Reference	(3)	11	--	2-1320
125.	C7.10	Pressure Retaining Components	--	--	(1)	(1)
		Integrally Welded Attachments				
126.	C3.20	Loop 31 18" Feedwater - HBF-10 and HBF-17	--	70	--	2-2102
127.	C3.20	Loop 33 28" Mainsteam - PR-3 and HMS-8	--	70	--	2-2300
128.	C3.20	Loop 33 28" Mainsteam - HMS-9	--	70	--	2-2300
129.	C3.20	Loop 33 28" Mainsteam - MSR-26	--	70	--	2-2301

Program Item	IWC-2500-1 Reference	Area and Extent of Examination	Examination Procedure Vol.	Surf.	Vis	Sketch Reference
		Integrally Welded Attachments (Cont'd)				
130.	C3.20	Loop 33 18" Feedwater - HBF-11, HBF-16, PR-3 and HBF-15	--	70	--	2-2302
131.	C3.20	Loop 34 28" Mainsteam - HMS-7, PR-3 and HMS-9	--	70	--	2-2400
132.	C3.20	Loop 34 28" Mainsteam - MSR-19	--	70	--	2-2401
133.	C3.20	Loop 34 18" Feedwater - HBF-13 HBF-12, PR-3 and HBF-16	--	70	--	2-2402
		Circumferential Welds				
134.	C5.11	14" RHR-7, 8, 13, 19 and 20	--	11	--	2-2500
135.	C5.11	12" RHR-28, 29, 34 and 35	--	11	--	2-2510
136.	C5.11	12" RHR-6, 7, 8 & 9	--	11	--	2-2511
137.	C5.11	10" Accumulator Discharge-5 and 6	--	11	--	2-2522
138.	C5.11	8" RHR-6 and 7	--	11	--	2-2512
139.	C5.11	8" RHR-2 and 3	--	11	--	2-2520
140.	C5.11	6" RHR-35, 36 and 37	--	11	--	2-2530
141.	C5.11	6" SIS-32, 33, 34 and 35	--	11	--	2-2540
142.	C5.11	Loop 31 6" Mainsteam - 30	--	70	--	2-2101
		Longitudinal Welds				
143.	C5.12	14" RHR-61LS and 62LS	--	11	--	2-2500
		Circumferential Welds				
144.	C5.21	Loop 33 31" Mainsteam - 1	206(5)	70(5)	--	2-2300
145.	C5.21	Loop 34 28" Mainsteam - 13	206	70	--	2-2400
146.	C5.21	Loop 34 28" Mainsteam-1 and 2	206	70	--	2-2401
147.	C5.21	Loop 31 18" Feedwater - 2 and 3	206(5)	70(5)	--	2-2102
148.	C5.21	Loop 32 18" Feedwater - 1	206(5)	70(5)	--	2-2202

Program Item	IWC-2500-1 Reference	Area and Extent of Examination	Examination Procedure Vol.	Surf.	Vis	Sketch Reference
		Circumferential Welds (Cont'd)				
149.	C5.21	Loop 33 18" Feedwater-2	206(5)	70(5)	--	2-2302
150.	C5.21	Loop 33 18" Feedwater-9 and 10	206	70	--	2-2302
151.	C5.21	Loop 34 18" Feedwater-2, 3 and 4	206(5)	70(5)	--	2-2402
152.	C5.21	Loop 34 18" Feedwater-11 and 12	206	70	--	2-2402
153.	C5.21	10" Accumulator Discharge-1 and 3	206	11	--	2-2522
154.	C5.21	8" RHR-20 and 21	206	11	--	2-2531
155.	C5.21	Loop 31 12" Mainsteam-8	206	70	--	2-2101
156.	C5.21	6" RHR-6, 7, 8 and 9	206	11	--	2-2531
157.	C5.21	6" RHR-5 and 6	206	11	--	2-2532
158.	C5.21	6" RHR-22 and 23	206	11	--	2-2541
159.	C5.21	6" RHR-12, 13, 14 and 15	206	11	--	2-2542
		Longitudinal Welds				
160.	C5.22	8" RHR-11LS	206	11	--	2-2533
		Branch Pipe Connections				
161.	C5.31	Loop 31-12" Mainsteam-7(BC) and 22(BC)	--	70	--	2-2101
		Piping				
162.	C7.30	Pressure Retaining Components	--	--	(1)	(1)
		Residual Heat Removal Pumps 31 and 32				
163.	C7.50	Pressure Retaining Components	--	--	(7)	(7)
		Charging Pumps 31, 32 and 33				
164.	C7.50	Pressure Retaining Components	--	--	(1)	(1)
		Safety Injection Pumps 31, 32 & 33				
165.	C7.50	Pressure Retaining Components	--	--	(7)	(7)
		Valves				
166.	C7.70	Pressure Retaining Components	--	--	(1)	(1)

Program Item	IWD-2500-1 Reference	Area and Extent of Examination	Examination Procedure			Sketch Reference
			Vol.	Surf.	Vis	
		Class 3 Integrally Welded Attachments				
167.	D1.10	Pressure Retaining Components	--	--	(7)	(7)
168.	D1.20	Safety Injection Pump 31-Lube Oil Coolers	--	--	8	3-1520
169.	D2.10	Pressure Retaining Components	--	--	(1)	(1)
170.	D2.20	Non-Regenerative Letdown Heat Exchanger CSAHNRT-31	--	--	8	3-1120
171.	D2.20	Seal Water Heat Exchanger CSAHSW1-31	--	--	8	3-1130
172.	D2.20	Component Cooling Heat Exchanger ACAHCC1-31	--	--	8	3-1140
173.	D2.20	Component Cooling Heat Exchanger ACAHCC2-32	--	--	8	3-1140
174.	D2.20	Diesel Generator 31 Jacket Water Cooler	--	--	8	3-1160
175.	D2.20	Diesel Generator 32 Jacket Water Cooler	--	--	8	3-1160
176.	D2.20	Diesel Generator 33 Jacket Water Cooler	--	--	8	3-1160
177.	D2.20	Diesel Generator 31 Lube Oil Cooler	--	--	8	3-1160
178.	D2.20	Diesel Generator 32 Lube Oil Cooler	--	--	8	3-1160
179.	D2.20	Diesel Generator 33 Lube Oil Cooler	--	--	8	3-1160
180.	D2.20	Reactor Coolant Pump RCPCPC1-31 Lube Oil Cooler	--	--	8	3-1170

Program Item	IWD-2500-1 Reference	Area and Extent of Examination	Examination Procedure Vol.	Surf.	Vis	Sketch Reference
		Class 3 Integrally Welded Attachments (Cont'd)				
181.	D2.20	Reactor Coolant Pump RCPCPC2-32 Lube Oil Cooler	--	--	8	3-1170
182.	D2.20	10" Service Water Line 1221-SWN-A-199	--	--	8	3-3402
183.	D2.20	10" Service Water Line 12E-SWH-79, SW-H&R-12E-1, SW-H&R-83, M/S-11E-40-SW-H&R-12E, SW-H-85A and SW-H&R-12E-5	--	--	8	3-3409
184.	D2.20	10" Service Water Line 12D-SW-H&R-87	--	--	8	3-3409
185.	D2.20	10" Service Water Line 12C-M/S-12A-33-SW-H&R-12C M/S-12A-34-SW-H-12C, M/S-12A-35-SW-H&R-12C, M/S-12A-36-SW-H-12C, M/S-12A-38-SW-H-12C, SW-H-12C-14, and SW-R-12C-17	--	--	8	3-3410
186.	D2.20	10" Service Water Line 12B-M/S-12A-33-SW-H&R-12B, M/S-12A-34-SW-H-12B, M/S-12A-35-SW-H&R-12B and SW-H&R-12B-12	--	--	8	3-3410
187.	D2.20	10" Service Water Line 12A-SW-H&R-12A-33, SW-H-12A-34, SW-H-12A-35, SW-H-12A-36, SW-H-12A-38 and SW-H&R-12-9	--	--	8	3-3411
188.	D2.20	10" Component Cooling Water Line 199 - AC-H&R-523	--	--	8	3-3500
189.	D2.20	10" Component Cooling Water Line 209 - AC-H&R-528	--	--	8	3-3500
190.	D2.20	10" Component Cooling Water Line 211 - AC-H&R-532	--	--	8	3-3500
191.	D2.20	12" Component Cooling Water Line 52 - AC-H&R-52-3, AC-H-52-4 and AC-H&R-52-5	--	--	8	3-3504

Program Item	IWD-2500-1 Reference	Area and Extent of Examination	Examination Procedure			Sketch Reference
			Vol.	Surf.	Vis	
		Class 3 Integrally Welded Attachments (Cont'd)				
192.	D2.20	Conventional Service Water Pumps 34, 35 and 36	--	--	8(5)	3-4100
193.	D2.20	Nuclear Service Water Pump 31	--	--	8(5)	3-4110
194.	D2.20	Nuclear Service Water Pump 32	--	--	8(5)	3-4110
195.	D2.20	Nuclear Service Water Pump 33	--	--	8(5)	3-4110
196.	D2.20	Nuclear Service Water Pump 31 Strainer	--	--	8	3-4190
197.	D2.20	Nuclear Service Water Pump 32 Strainer	--	--	8	3-4190
198.	D2.20	Nuclear Service Water Pump 33 Strainer	--	--	8	3-4190
199.	D2.30	10" Service Water Line 12C-M/S-12A-39-SW-R-12C	--	--	8	3-3410
200.	D2.40	10" Service Water Line 12A-SW-H-43	--	--	8	3-3411
201.	D2.40	12" Component Cooling Water Line 52A-AC-H-542 and AC-H-544	--	--	8	3-3501
202.	D3.10	Pressure Retaining Components	--	--	(1)	(1)
203.	D3.20	Spent Fuel Pit Heat Exchanger ACAHSF1-31	--	--	8	3-1110
204.	D3.20	10" Spent Fuel Pit Cooling Water Line 329-AC-H&R-329-4 and AC-HR-329-9	--	--	8	3-3601

Program Item	IWF-2500-1 Reference	Area and Extent of Examination	Examination Procedure			Sketch Reference
			Vol.	Surf.	Vis	
		Supports and Hangers				
205.	F1.30	Pressurizer Skirt Integrally Welded Attachment - 18 (From 0" Clockwise to 100")	--	--	8	1-2100
206.	F3.10-F3.50	Loop 31 10" Accumulator Discharge-PWR-127A, SI-H-179A, PWR-127, SI-H-351-2, PWR-128, PWR-129 and SI-H-351-1	--	--	8	1-4101
207.	F3.10-F3.50	Loop 31 2" SIS Hotleg-SI-H&R-843-5C, SI-R-843-6, SI-H&R-843-7, SI-H&R-843-7A, SI-H&R-843-8, SI-H&R-843-9, SI-R-843-10 and SI-H&R-843-8A	--	--	8	1-4102
208.	F3.10-F3.50	Loop 31 1 1/2" SIS Coldleg-RC-H-753-15, RC-R-753-16, RC-R-753-17, RC-H-753-18 & RC-H&R-753-19	--	--	8	1-4107
209.	F3.10-F3.50	Loop 31-2" Seal Injection-CH-H-41-15	--	--	8	1-4108
210.	F3.10-F3.50	Loop 32 14" RHR Hotleg Take-off-PWR-7, AC-H-10-8, AC-H-10-7, PWR-7A, AC-H-10-6, AC-H-10-5, PWR-7C, AC-R-40, AC-R-41, AC-H-10-4, PWR-7D, PWR-7E, AC-H-10-3 and AC-H-10-2	--	--	8	1-4201
211.	F3.10-F3.50	Loop 32 10" Accumulator Discharge-PWR-5, SI-H-167, PWR-4B and SI-H-168	--	--	8	1-4202
212.	F3.10-F3.50	Loop 32 1 1/2" SIS Coldleg SI-H-16A-13, PWR-2, SI-H-16A-12, SI-R-16A-11, SI-H&R-16A-10, SI-H&R-16A-9, SI-R-16A-8, SI-H&R-16A-7 and SI-H-16A-6	--	--	8	1-4207
213.	F3.10-F3.50	14" Pressurizer Surge-PWR-120, PWR-121, PWR-122, PWR-123, PWR-124, PWR-125 and PW-H-63-1	--	--	8	1-4500

Program Item	IWF-2500-1 Reference	Area and Extent of Examination	Examination Procedure Vol.	Surf.	Vis	Sketch Reference
		Supports and Hangers (Cont'd)				
214.	F3.10-F3.50	6" Pressurizer Safety-RC-H-342-1	--	--	8	1-4501
215.	F3.10-F3.50	6" Pressurizer Safety-RC-H-343-1	--	--	8	1-4502
216.	F3.10-F3.50	6" Pressurizer Safety-RC-H-344-1	--	--	8	1-4503
217.	F3.10-F3.50	3" Pressurizer Relief-RC-R-70-3A	--	--	8	1-4505
218.	F3.10-F3.50	3" Pressurizer Spray-PWR-90, RC-H-61-1, PWR-91, RC-H&R-61-2, PWR-92, RC-H&R-61-4, RC-R-61-5, PWR-96, RC-H&R-61-6, PWR-97, RC-H&R-61-7, PWR-98, RC-H&R-61-8, RC-H-61-9 and RC-H&R-61-3	--	--	8	1-4507
219.	F3.10-F3.50	Replacement Steam Generator 31-Support Shoes and Lateral Supports	--	--	8(5)	2-1101
220.	F3.10-F3.50	Replacement Steam Generator 32-Support Shoes and Lateral Supports	--	--	8(5)	2-1101
221.	F3.10-F3.50	Replacement Steam Generator 33-Support Shoes and Lateral Supports	--	--	8(5)	2-1101
222.	F3.10-F3.50	Replacement Steam Generator 34-Support Shoes and Lateral Supports	--	--	8(5)	2-1101
223.	F1.30	Accumulator Tank 32-1WS	--	--	8	2-1210
224.	F3.10-F3.50	Loop 31 28" Mainsteam-MSR-21, MSR-27, MS-H-362, MSR-16 MSR-24, MSR-13, MSR-2, MS-H-2-4, MSR-4, MSR-17, MSR-29, MS-H-361, MSR-11, MS-R-2-1 and MS-A-1020-1	--	--	8	2-2101
225.	F3.10-F3.50	Loop 31 18" Feedwater-HBF-1, PWR-249, PWR-250, PWR-251, HBF-19, PR-5, HBF-18, PR-4, HBF-17, HBF-10, PWR-530, PWR-536, BFD-H-46, PWR-534 and BF-R-300	--	--	8	2-2102
226.	F3.10-F3.50	Loop 33 28" Mainsteam-PR-1, HMS-11, PR-2, HMS-10, PR-3, HMS-9 and HMS-8	--	--	8	2-2300

Program Item	IWF-2500-1 Reference	Area and Extent of Examination	Examination Procedure			Sketch Reference
			Vol.	Surf.	Vis	
		Supports and Hangers (Cont'd)				
227.	F3.10-F3.50	Loop 33 18" Feedwater-PR-1, HBF-14, PR-2, HBF-15, PR-3, HBF-16, HBF-3 and HBF-11	--	--	8	2-2302
228.	F3.10-F3.50	Loop 34 28" Mainsteam-PR-3 & HMS-7	--	--	8	2-2400
229.	F3.10-F3.50	Loop 34 18" Feedwater-HBF-13 PR-1, HBF-14, PR-2, HBF-15, PR-3, HBF-16 and HBF-12	--	--	8	2-2402
230.	F3.10-F3.50	14" RHR-AC-R-10-13, AC-R-10-12, AC-H-201, AC-H-10-14, AC-H-10-15 AC-H-10-16, AC-H-10-17, AC-R-10-18A and AC-R-10-18B	--	--	8	2-2500
231.	F3.10-F3.50	12" & 8" RHR-AC-H-9-10, AC-H-9-9, AC-H-9-8, AC-H-84, AC-H-83, AC-H-9-6, AC-H-86 and AC-A-9-7	--	--	8	2-2510
232.	F3.10-F3.50	12" RHR-AC-H-9-12, AC-H-227, AC-H-222, AC-R-9-11, AC-H-220, AC-H&R-9-14, AC-H-219, AC-R-222, AC-H&R-9-13, AC-H&R-9-5, AC-H-9-4, AC-H-9-3 and AC-H-9-4A	--	--	8	2-2511
233.	F3.10-F3.50	8" RHR-AC-H-210, AC-R-212, AC-R-213, AC-H-211, AC-H 212 and AC-R-214	--	--	8	2-2512
234.	F3.10-F3.50	8" RHR-AC-H-90-1 and AC-H-90-2	--	--	8	2-2520
235.	F3.10-F3.50	10" Accumulator Discharge-SI-H-167A, SI-R-352-1, PWR-153, PWR-154, PWR-154A, SIH-352-2, PWR-154B and PWR-155	--	--	8	2-2522
236.	F3.10-F3.50	10" Accumulator Discharge-PWR-156, PWR-157, SI-H-350-2, PWR-158, SI-H&R-350-1, PWR-160, PWR-161, PWR-162, SI-H-187 and PWR-159	--	--	8	2-2524
237.	F3.10-F3.50	8" & 6" RHR-SI-H-89-1, MS-60-1-SI-R-89-2 and SI-H-60-1	--	--	8	2-2530

Program Item	IWF-2500-1 Reference	Area and Extent of Examination	Examination Procedure Vol.	Surf.	Vis	Sketch Reference
		Supports and Hangers (Cont'd)				
238.	F3.10-F3.50	8" & 6" RHR-SI-H-355-1, SI-H-355-2, SI-H-355-3, SI-H-355-4 and SI-R-355-1A	--	--	8	2-2531
239.	F3.10-F3.50	6" RHR-SI-R-44, MS-361-1B-SI-R-358 and SI-H&R-214	--	--	8	2-2532
240.	F3.10-F3.50	6" SIS-MS-60-4-SI-A-56, MS-60-6-SI-H-56, SI-H&R-56-8, SI-H-56-7, SI-H&R-56-6, SI-R-56-5, MS-60-15-SI-H-56, MS-60-16-SI-H&R-56, SI-H-56-4 and MS-60-17-SI-H-56	--	--	8	2-2540
241.	F3.10-F3.50	Spent Fuel Pit Heat Exchanger ACAHSF1-31	--	--	8	3-1110
242.	F3.10-F3.50	Non-Regenerative Letdown Heat Exchanger CSAHNRT-31	--	--	8	3-1120
243.	F3.10-F3.50	Seal Water Heat Exchanger CSAHSW1-31	--	--	8	3-1130
244.	F3.10-F3.50	Component Cooling Heat Exchangers ACAHCC1-31 and ACAHCC2-32	--	--	8	3-1140
245.	F3.10-F3.50	Diesel Generators 31, 32 and 33 Jacket Water Cooler	--	--	8	3-1160
246.	F3.10-F3.50	Diesel Generators 31, 32 and 33 Lube Oil Cooler	--	--	8	3-1160
247.	F3.10-F3.50	Reactor Coolant Pumps RCPCPC1-31 and RCPCPC2-32 Lube Oil Cooler	--	--	8	3-1170
248.	F3.10-F3.50	Recirculation Fan Cooler 31, 32 and 33	--	--	8	3-1500
249.	F3.10-F3.50	Safety Injection Pump 31-Lube Oil Coolers	--	--	8	3-1520
250.	F3.10-F3.50	14" Service Water Line 1081-SWN-A-1081-2, SWN-H&R-1081-3, SWN-H&R-1081-6 and SWN-H&R-1081-1	--	--	8	3-3400

Program Item	IWF-2500-1 Reference	Area and Extent of Examination	Examination Procedure			Sketch Reference
			Vol.	Surf.	Vis	
		Supports and Hangers (Cont'd)				
251.	F3.10-F3.50	14" Service Water Line 1082-SWN-A-1082-2, SWN-H&R-1082-3, SWN-H&R-1082-6 and SWN-H&R-1082-1	--	--	8	3-3400
252.	F3.10-F3.50	14" Service Water Line 1083-SWN-H&R-1083-1, SWN-A-1083-2, SWN-H&R-1083-3 and SWN-H&R-1083-6	--	--	8	3-3400
253.	F3.10-F3.50	24" Service Water Line 409-SWN-R-547, M/S-511-SWN-H&R-409, M/S-510-SWN-H&R-409, MS-509-SWN-H&R-409, M/S-508-SWN-H&R-409 and M/S-508A-SWN-H&R-409	--	--	8	3-3402
254.	F3.10-F3.50	16" Service Water Line 1219-SWN-H-1219-13	--	--	8	3-3402
255.	F3.10-F3.50	10" Service Water Line 1221-SWN-A-199	--	--	8	3-3402
256.	F3.10-F3.50	20" and 18" Line 407-SWN-R-550, SWN-H&R-407-1, SWN-H&R-407-2, SWN-H&R-407-3, M/S-563-SWN-R-407, SWN-H&R-407-4, M/S-502-SWN-H&R-407, M/S-503-SWN-H&R-407, M/S-504-SWN-H&R-407, M/S-505-SWN-H&R-407, M/S-506-SWN-H&R-407, M/S-507-SWN-H&R-407, SWN-R-548, M/S-525-SWN-H&R-409, M/S-526-SWN-H&R-409, SWN-H&R-549 and SWN-H-551	--	--	8	3-3404
257.	F3.10-F3.50	10" Service Water Line 12D-SW-H-90, SW-H-88, SW-H&R-87 and SW-R-12D-19	--	--	8	3-3409
258.	F3.10-F3.50	10" Service Water Line 12E-SW-H-79, SW-H&R-12E-1, SW-H-12E-2, SW-R-12E-3, M/S-11E-23-SW-H-12E, SW-R-12E-3A, SW-H&R-83, SW-H-84, M/S-11E-40-SW-H&R-12E, SW-H-85A, SW-R-12E-4 and SW-H&R-12E-5	--	--	8	3-3409
259.	F3.10-F3.50	10" Service Water Line 12B-M/S-12A-6-SW-R-12B, SW-H-55, M/S-12A-32-SW-H-12B, M/S-12A-33-SW-H&R-12B, M/S-12A-34-SW-H-12B, M/S-12A-35-SW-H&R-12B, M/S-11A-21-SW-R-12B, and SW-H&R-12B-12	--	--	8	3-3410

Program Item	IWF-2500-1 Reference	Area and Extent of Examination	Examination Procedure Vol.	Surf.	Vis	Sketch Reference
		Supports and Hangers (Cont'd)				
260.	F3.10-F3.50	10" Service Water Line 12C-M/S-12A-6-SW-R-12C, SW-H-63, SW-H-62, M/S-12A-32-SW-H-12C, M/S-12-33-SW-H&R-12C, M/S-12A-34-SW-H-12C, M/S-12A-35-SW-H&R-12C, M/S-12A-36-SW-H-12C, M/S-12A-37-SW-H-12C, M/S-12A-38-SW-H-12C, M/S-12A-39-SW-R-12C, SW-R-12C-13, SW-H-71, SW-H-12C-14, SW-H-29A, SW-R-12C-15A, SW-R-12C-15, SW-R-12C-16, SW-R-12C-17, SW-H-73 and M/S-12A-31-SW-R-12C	--	--	8	3-3410
261.	F3.10-F3.50	10" Service Water Line 12A-SW-H-43, SW-R-12A-6, SW-H-44, SW-H-12A-32, SW-H&R-12A-33, SW-H-12A-34, SW-H-12A-35, SW-H-12A-36, SW-R-12A-7, SW-H-12A-37, SW-H-12A-38, SW-H&R-12A-39, SW-H-12A-39A, SW-R-12A-8, SW-H&R-12-9 and SW-H-12A-31	--	--	8	3-3411
262.	F3.10-F3.50	10" Service Water Line 11D-SW-H-89, SW-H&R-91 and SW-R-11D-28	--	--	8	3-3412
263.	F3.10-F3.50	14" & 10" Component Cooling Lines 211 and 199-AC-H-535, AC-R-534, AC-H-536, AC-R-533, AC-H&R-532, AC-R-531, AC-R-211-2, AC-H&R-530, AC-H&R-529, AC-H&R-523, AC-R-522, AC-H&R-521, AC-R-520 and AC-H&R-519	--	--	8	3-3500
264.	F3.10-F3.50	10" Component Cooling Water Line 209-AC-H&R-528, AC-R-527, AC-R-209-1, AC-H&R-209, AC-R-525 and AC-H&R-524	--	--	8	3-3500
265.	F3.10-F3.50	16" & 12" Component Cooling Water Line 52-AC-H-537, AC-R-52-1A, AC-H-539, AC-H&R-541 and AC-H&R-551	--	--	8	3-3501

Program Item	IWF-2500-1 Reference	Area and Extent of Examination	Examination Procedure Vol.	Surf.	Vis	Sketch Reference
		Supports and Hangers (Cont'd)				
266.	F3.10-F3.50	16" & 12" Component Cooling Water Line 52A-AC-H-542, AC-R-543, AC-H-546, AC-H-541A, AC-H-544 and AC-R-545	--	--	8	3-3501
267.	F3.10-F3.50	10" Component Cooling Water Line 149-M/S-167-1-AC-H&R-149, AC-H-475, M/S-148-1A-AC-H&R-149, M/S-148-1B-AC-R-149 and M/S-515-1-AC-H&R-168	--	--	8	3-3501
268.	F3.10-F3.50	8" Component Cooling Water Line 168-M/S-167-1-AC-H&R-168, M/S-167-2-AC-H&R-168, M/S-167-3-AC-H&R-168 and M/S-167-4-AC-H&R-168	--	--	8	3-3501
269.	F3.10-F3.50	8" Component Cooling Water Line 168 - AC-R-168	--	--	(4)	3-3501
270.	F3.10-F3.50	12" Component Cooling Water Line 52-AC-H-89, AC-H-52-8, AC-R-52-7, AC-H-52-6, AC-H&R-52-5, AC-H-52-4, AC-H&R-52-3, AC-H&R-52-2 and AC-H-52-1	--	--	8	3-3504
271.	F3.10-F3.50	12" Component Cooling Water Line 52A-AC-H-52A-9, AC-H-52A-8, AC-R-52A-7, AC-H&R-52A-6, AC-H&R-52A-5, AC-H-52A-4, AC-H&R-52A-3, AC-R-52A-2 and AC-H-52A-1	--	--	8	3-3504
272.	F3.10-F3.50	6" Component Cooling Water Line 13-AC-H-13-1, AC-H&R-13-2, AC-R-13-3A, AC-H-13-3B and M/S-525-14-AC-H&R-13	--	--	8	3-3509
273.	F3.10-F3.50	6" Component Cooling Water Line 14-AC-H-14-12, M/S-13-1-AC-H-14, M/S-13-2-AC-H-14, M/S-13-3A-AC-R-14, M/S-13-3B-AC-H-14 and M/S-525-14-AC-H&R-14	--	--	8	3-3509

Program Item	IWF-2500-1 Reference	Area and Extent of Examination	Examination Procedure			Sketch Reference
			Vol.	Surf.	Vis	
		Supports and Hangers (Cont'd)				
274.	F3.10-F3.50	10" Spent Ful Pit Cooling Water Line 329-AC-HR-329-9, AC-H&R-329-4, AC-R-329-3, AC-H&R-329-2, AC-H&R-329-1, AC-R-329-6, SFPC-R-9, SVPC-V-14 and SFPC-R-8	--	--	8	3-3601
275.	F3.10-F3.0	8" Spent Fuel Pit Cooling Water Line 325-AC-H&R-325-1, AC-H&R-325-2 and AC-H&R-325-3	--	--	8	3-3601
276.	F3.10-F3.50	8" Spent Fuel Pit Cooling Water Line 326-AC-H&R-326-1	--	--	8	3-3601
277.	F3.10-F3.50	6" Auxiliary Feedpump Line 1072-CT-R-1072-2, CT-H&R-1072-3, CT-R-1072-4, CT-H-1072-5, CT-H&R-1072-1 and M/S-1071-2	--	--	8	3-3701
278.	F3.10-F3.50	6" Auxiliary Feedpump line 1073-M/S-1074-2, CT-H&R-1073-1, CT-R-1073-2, CT-H&R-1073-3, CT-R-1073-4 and CT-H-1073-5	--	--	8	3-3701
279.	F3.10-F3.50	6" Auxiliary Feedpump Line 1074-CT-H&R-1074-4A	--	--	8	3-3701
280.	F3.10-F3.50	6" Auxiliary Feedpump Line 1075-CT-H&R-1075-2A	--	--	8	3-3701
281.	F3.10-F3.50	Conventional Service Water Pumps 34, 35 & 36	--	--	8(5)	3-4100
282.	F3.10-F3.50	Nuclear Service Water Pumps 31, 32 and 33	--	--	8(5)	3-4110
283.	F3.10-F3.50	Nuclear Service Water Pumps 31, 32 and 33 Strainers	--	--	8	3-4190

Notes:

1. Performed by Plant Personnel during System Leakage Test.
2. Surface examination only per Relief Request.
3. Surface examination per Relief Request.
4. Performed by Plant Personnel during System Leakage Test per Relief Request.
5. Preservice Examination
6. Examination Performed at Cheswick, Penna.
7. Examination deferred until next outage.

FORM 46446

Reference: Section XI 1983 Edition Page 69

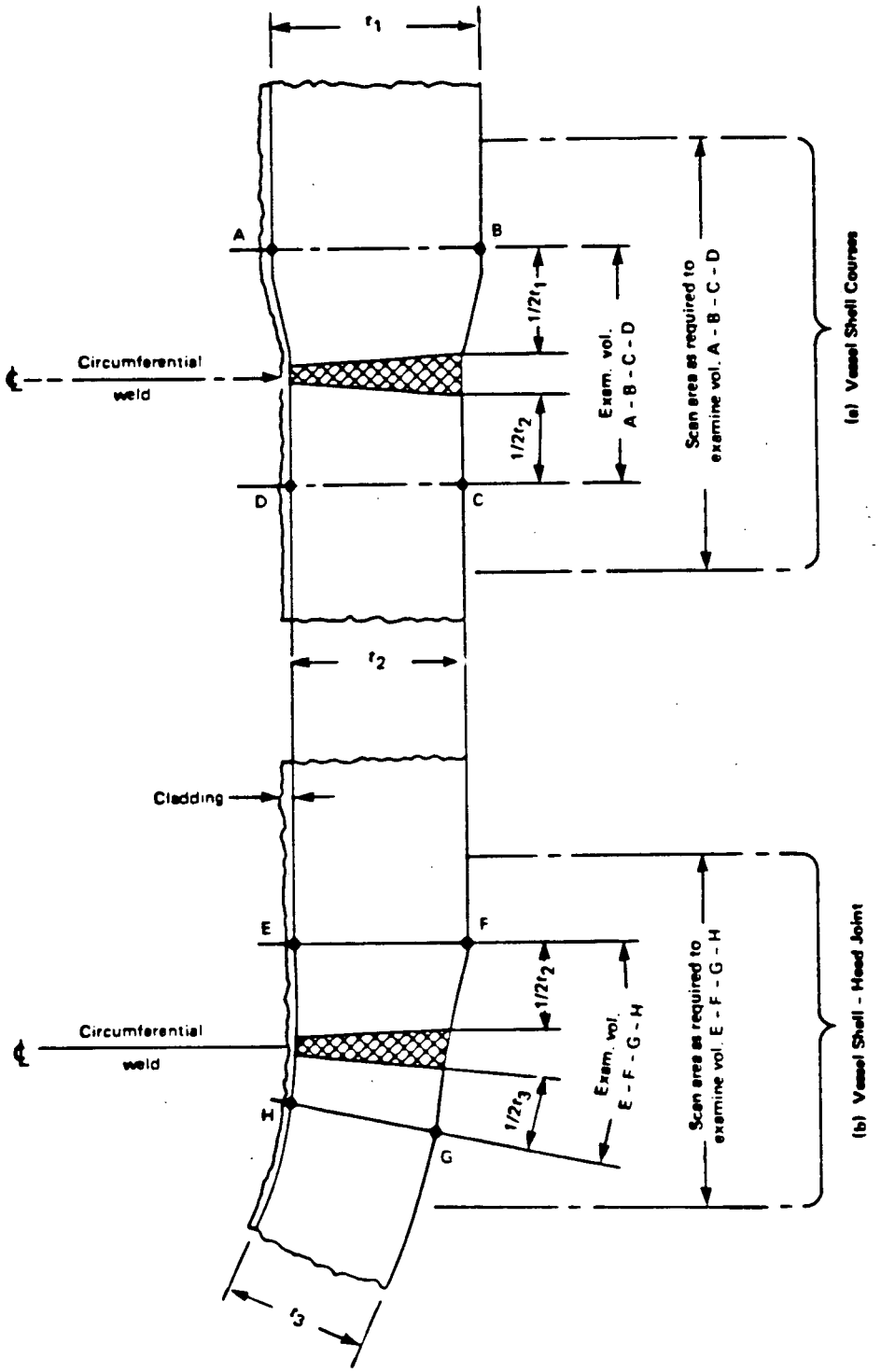

FIG. IWB-2500-1 VESSEL SHELL CIRCUMFERENTIAL WELD JOINTS

Reference: Section XI 1983 Edition Page 70

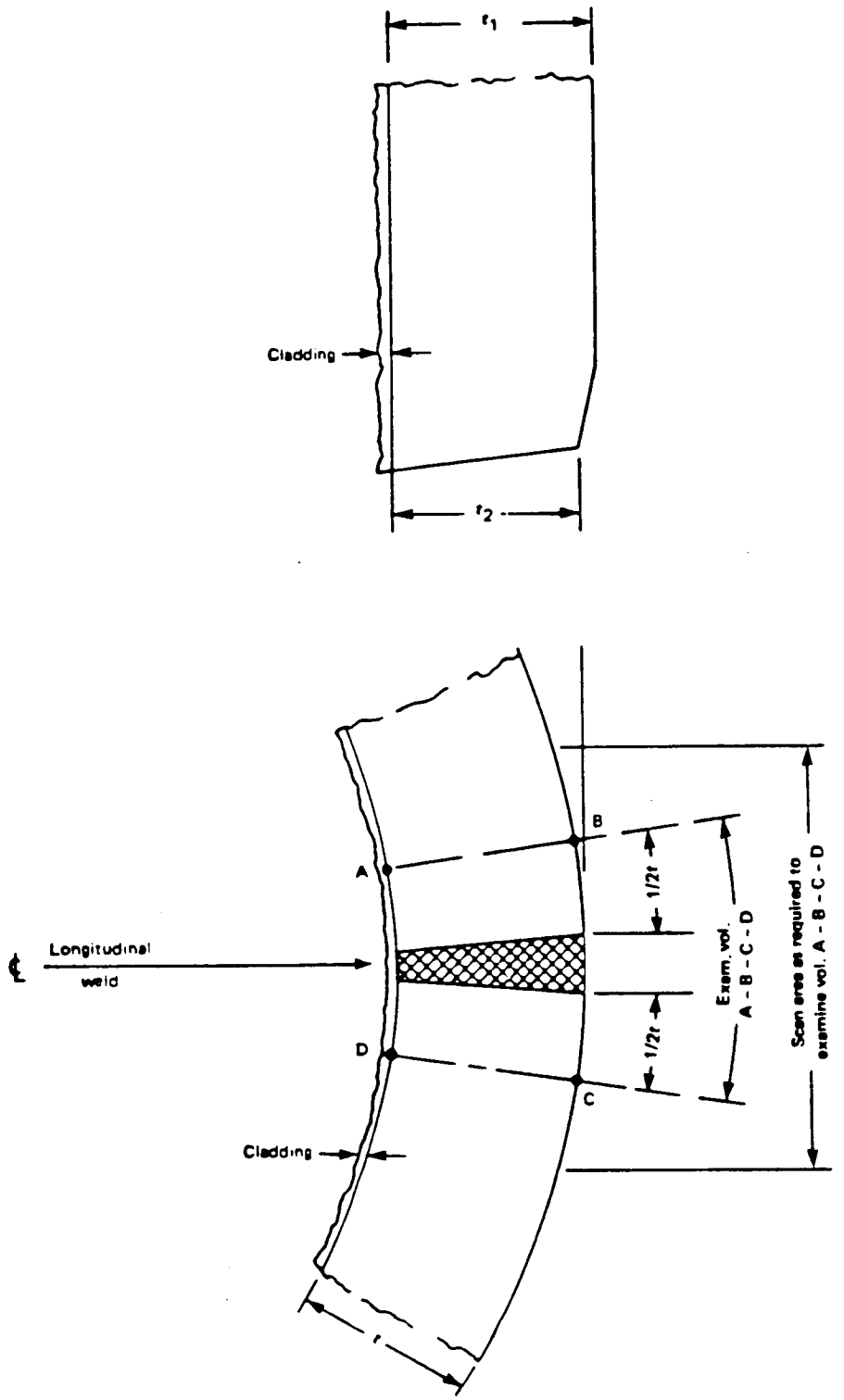

FIG. IWB-2500-2 VESSEL SHELL LONGITUDINAL WELD JOINTS

FORM 46440

FORM 46446

Reference: Section XI 1983 Edition Page 71

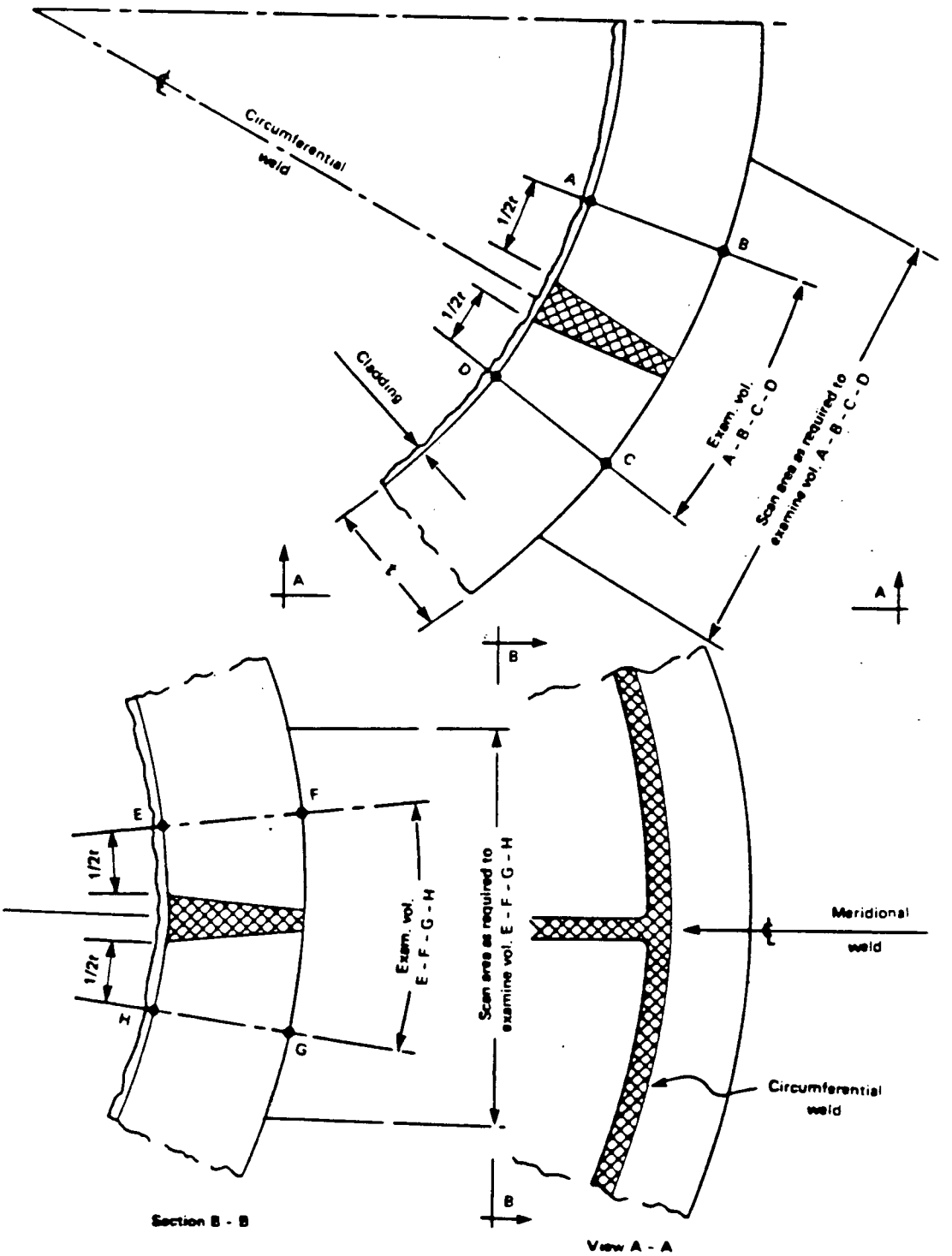

FIG. IWB-2500-3 SPHERICAL VESSEL HEAD
CIRCUMFERENTIAL AND MERIDIONAL WELD JOINTS

Reference: Section XI 1983 Edition Page 72

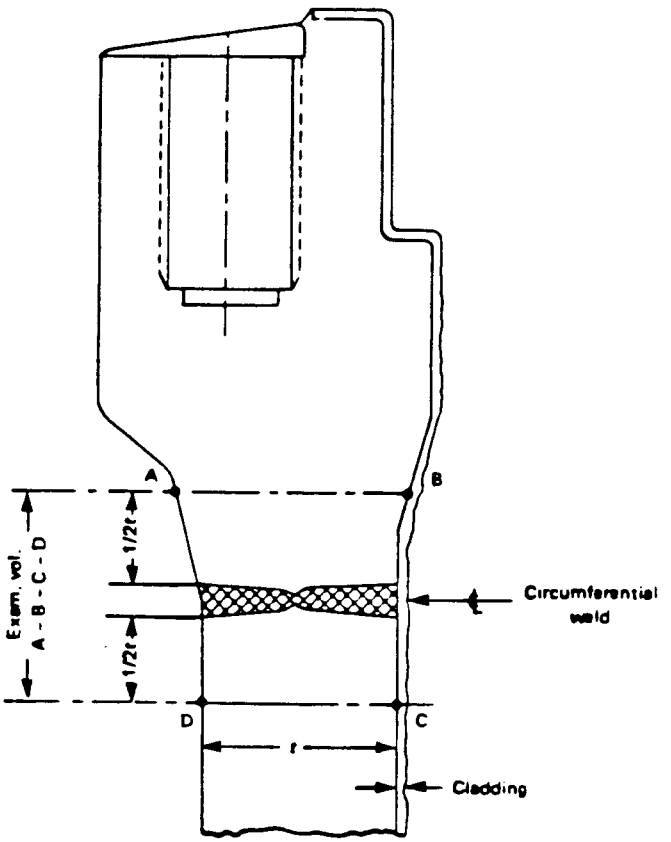

FIG. IWB-2500-4 SHELL-TO-FLANGE WELD JOINT

FORM 46446

Reference: Section XI 1983 Edition Page 73

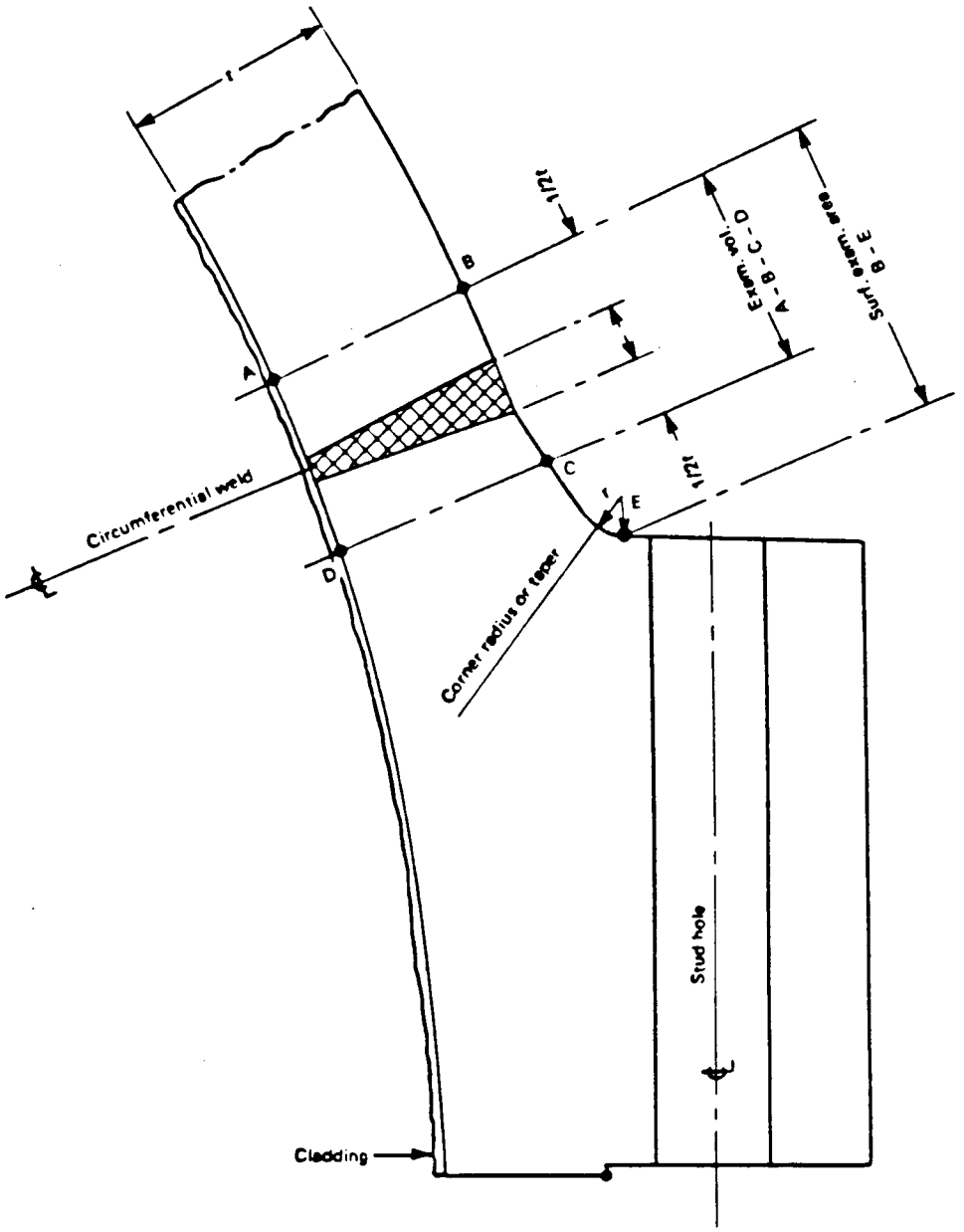

FIG. IWB-2500-5 HEAD-TO-FLANGE WELD JOINT

FORM 46446

Reference: Section XI 1983 Edition Page 74

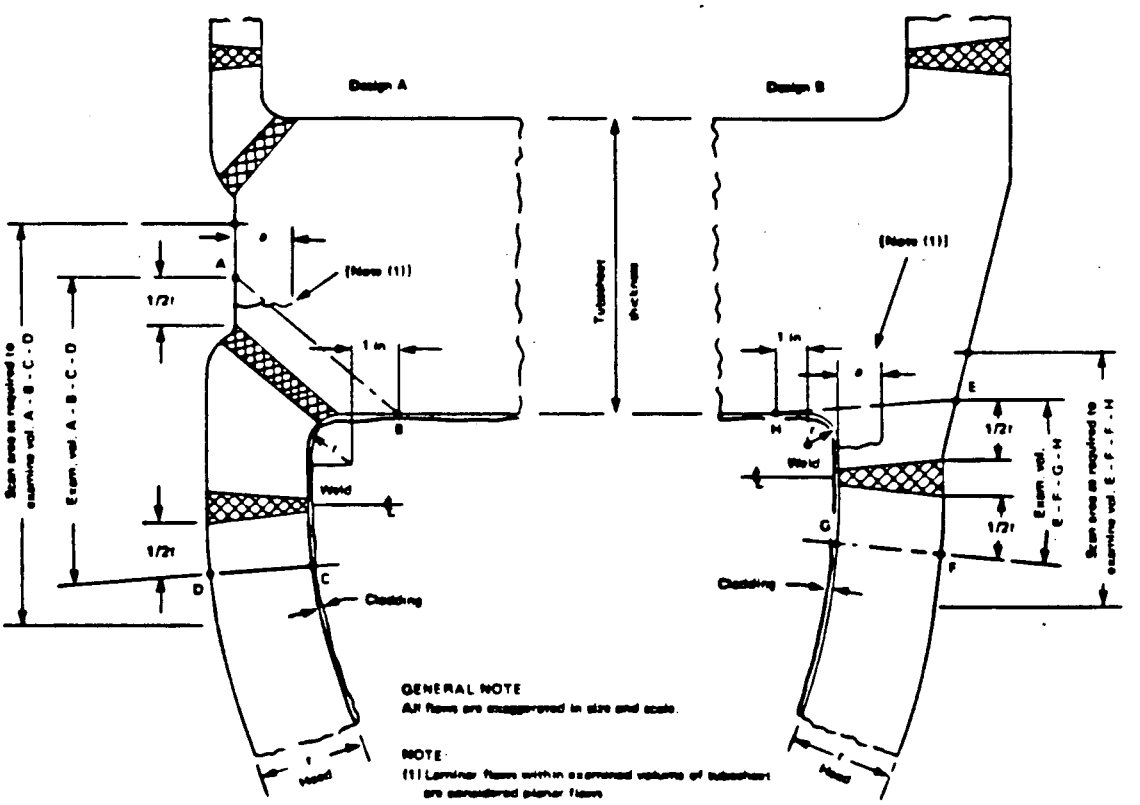

FIG. IWB-2500-6 TYPICAL TUBESHEET-TO-HEAD WELD JOINTS

FORM 46446

FORM 46446

Reference: Section XI 1983 Edition Page 75

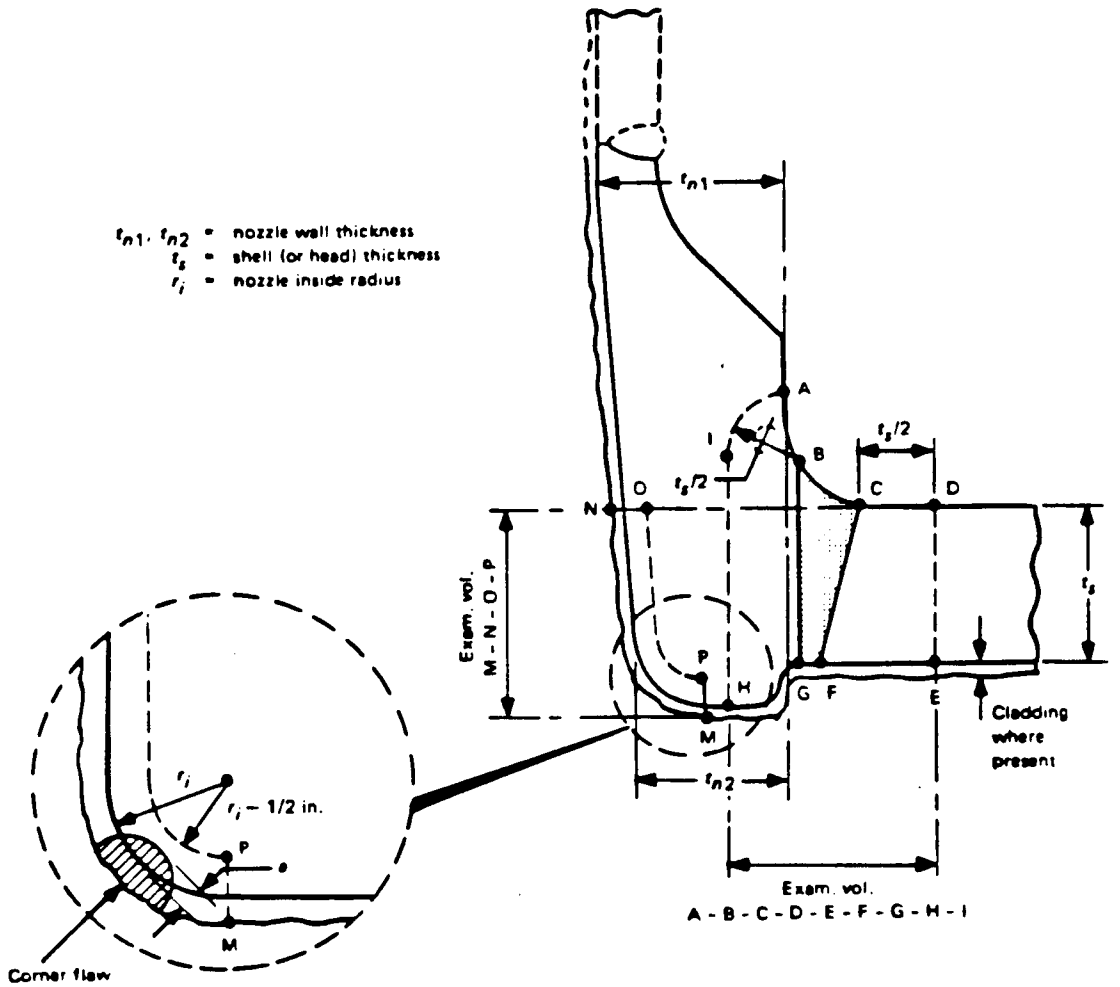

EXAMINATION REGION (Note (1))	EXAMINATION VOLUME (Note (2))
Shell (or head) adjoining region	C-D-E-F
Attachment weld region	B-C-F-G
Nozzle cylinder region	A-B-G-H-I
Nozzle inside corner region	M-N-O-P

NOTES:

(1) Examination regions are identified for the purpose of differentiating the acceptance standards in IWB-3512.

(2) Examination volumes may be determined either by direct measurements on the component or by measurements based on design drawings

FIG. IWB-2500-7(a) NOZZLE IN SHELL OR HEAD
(Examination Zones in Barrel Type Nozzles Joined by Full Penetration Corner Welds)

FORM 46446

Reference: Section XI 1983 Edition Page 76

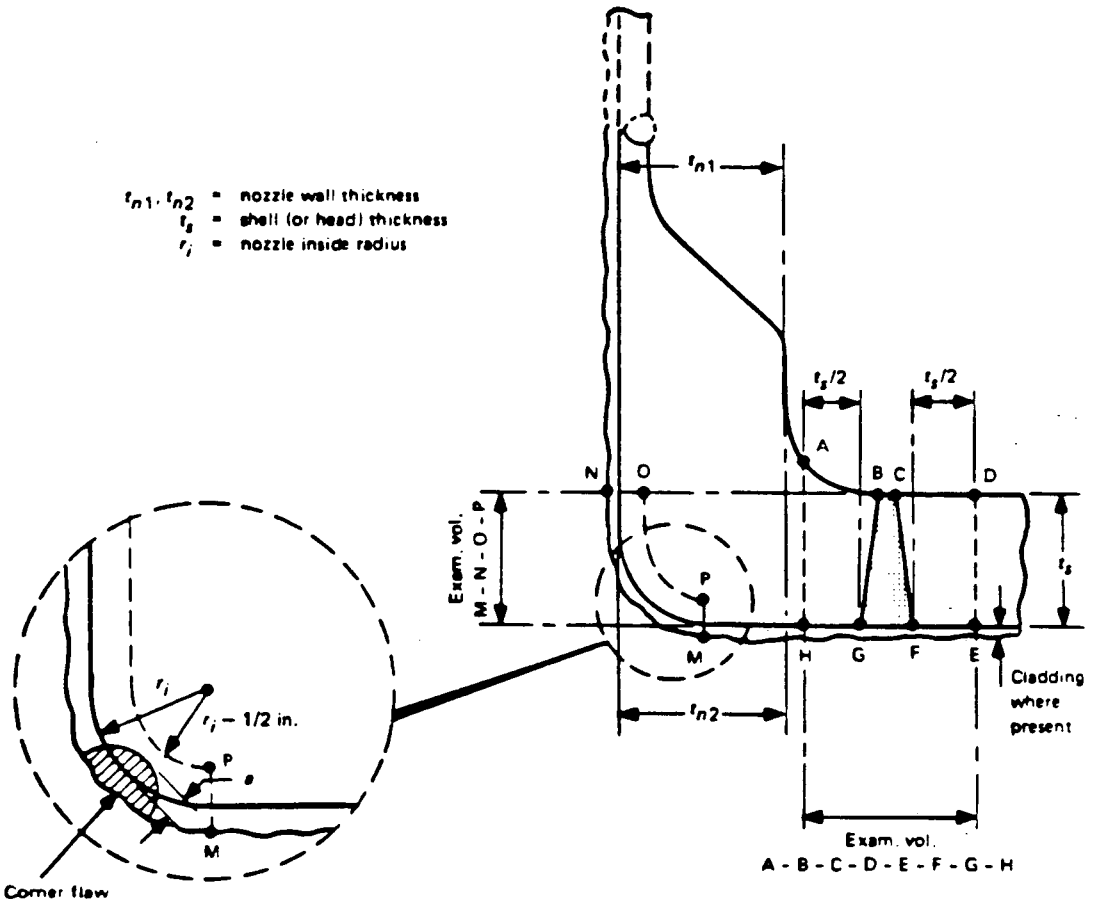

EXAMINATION REGION (Note (1))	EXAMINATION VOLUME (Note (2))
Shell (or head) adjoining region	C-D-E-F
Attachment weld region	B-C-F-G
Nozzle cylinder region	A-B-G-H
Nozzle inside corner region	M-N-O-P

NOTES
(1) Examination regions are identified for the purpose of differentiating the acceptance standards in IWB-3512
(2) Examination volumes may be determined either by direct measurements on the component or by measurements based on design drawings.

FIG. IWB-2500-7(b) NOZZLE IN SHELL OR HEAD
(Examination Zones in Flange Type Nozzles Joined by Full Penetration Butt Welds)

FORM 46446

Reference: Section XI 1983 Edition Page 77

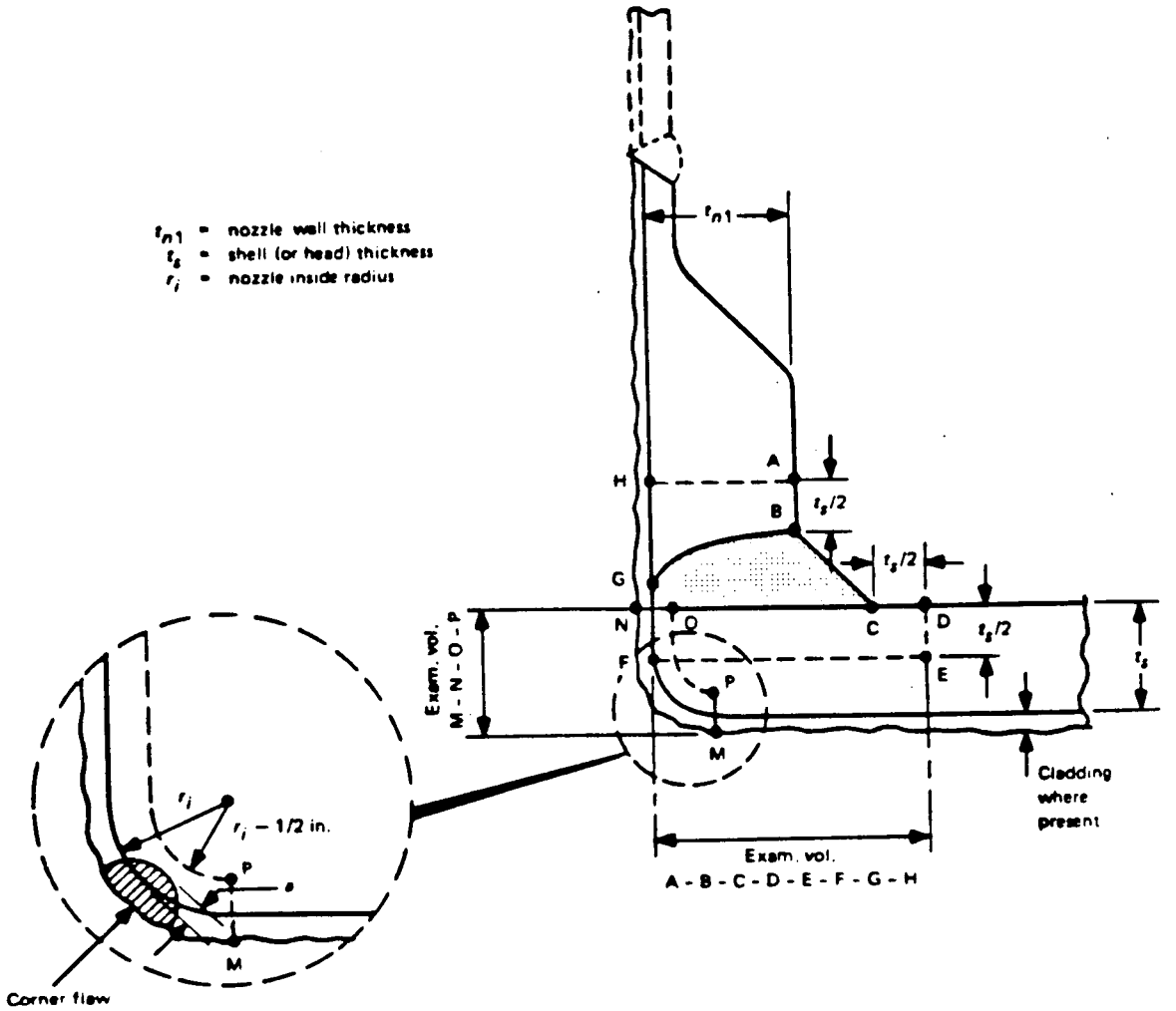

EXAMINATION REGION (Note (1))	EXAMINATION VOLUME (Note (2))
Shell (or head) adjoining region	C-D-E-F-G
Attachment weld region	B-C-G
Nozzle cylinder region	A-B-G-H
Nozzle inside corner region	M-N-O-P

NOTES:

(1) Examination regions are identified for the purpose of differentiating the acceptance standards in IWB-3512.

(2) Examination volumes may be determined either by direct measurements on the component or by measurements based on design drawings.

FIG. IWB-2500-7(c) NOZZLE IN SHELL OR HEAD
(Examination Zones in Set-On Type Nozzles Joined by Full Penetration Corner Welds)

Reference: Section XI 1983 Edition Page 78

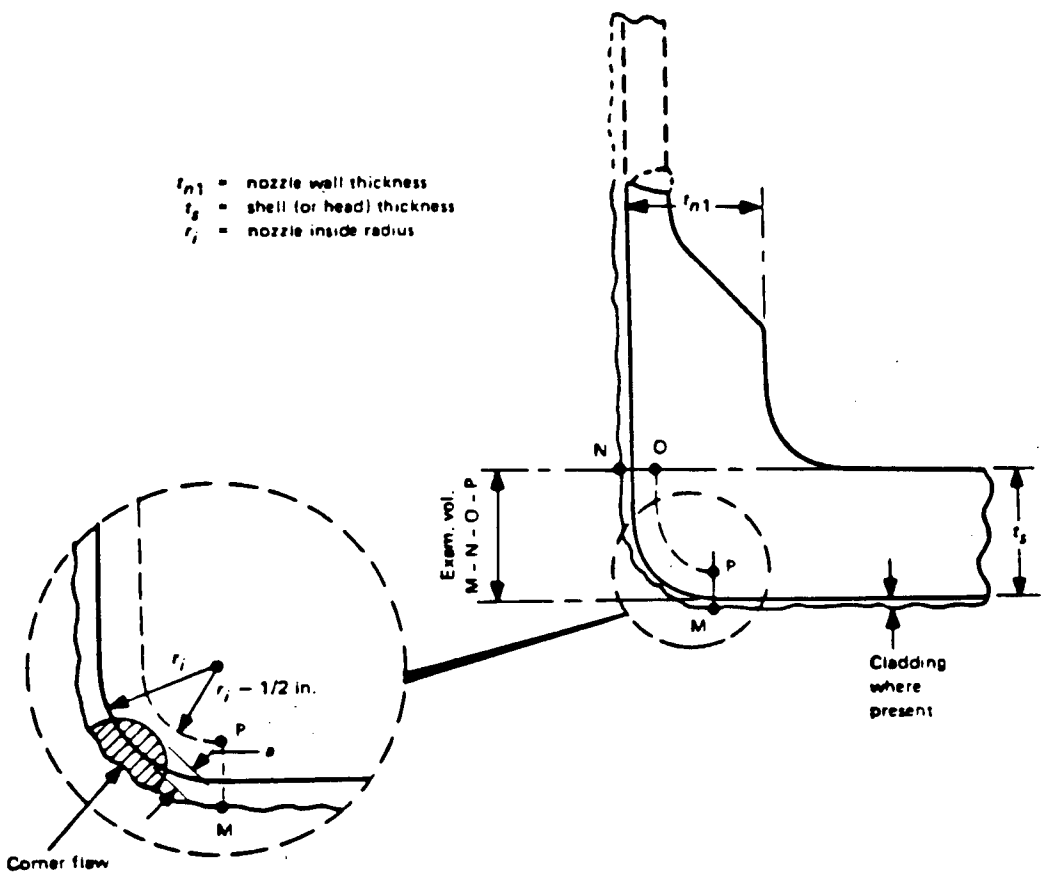

EXAMINATION REGION (Note (1))	EXAMINATION VOLUME (Note (2))
Nozzle inside corner region	M-N-O-P

NOTES:
(1) Examination regions are identified for the purpose of differentiating the acceptance standards in IWB-3512.
(2) Examination volumes may be determined either by direct measurements on the component or by measurements based on design drawings

FIG. IWB-2500-7(d) NOZZLE IN SHELL OR HEAD
(Examination Zone in Nozzles Integrally Cast or Formed in Shell or Head)

FORM 46446

Reference: Section XI 1983 Edition Page 79

FORM 46446

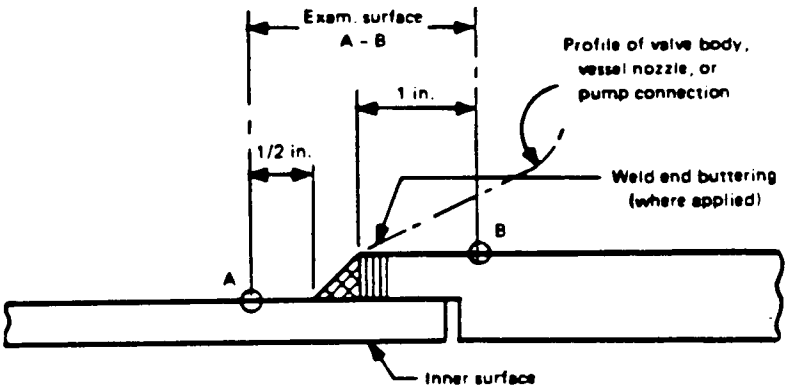

(a) Socket Welded Piping

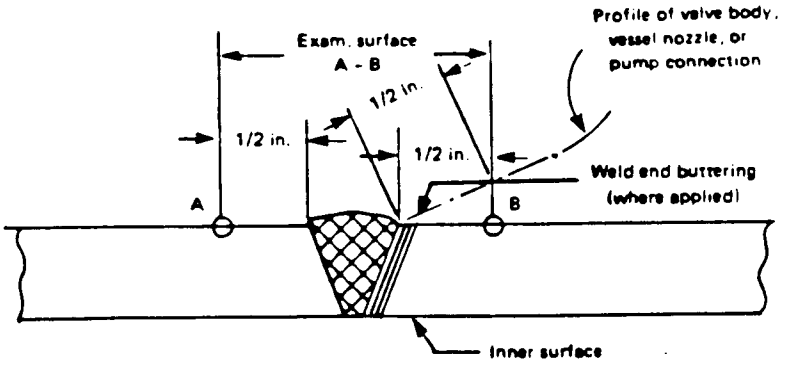

(b) NPS < 4 in.

FIG. IWB-2500-8 SIMILAR AND DISSIMILAR METAL WELDS IN COMPONENTS AND PIPING

Reference: Section XI 1983 Edition Page 80

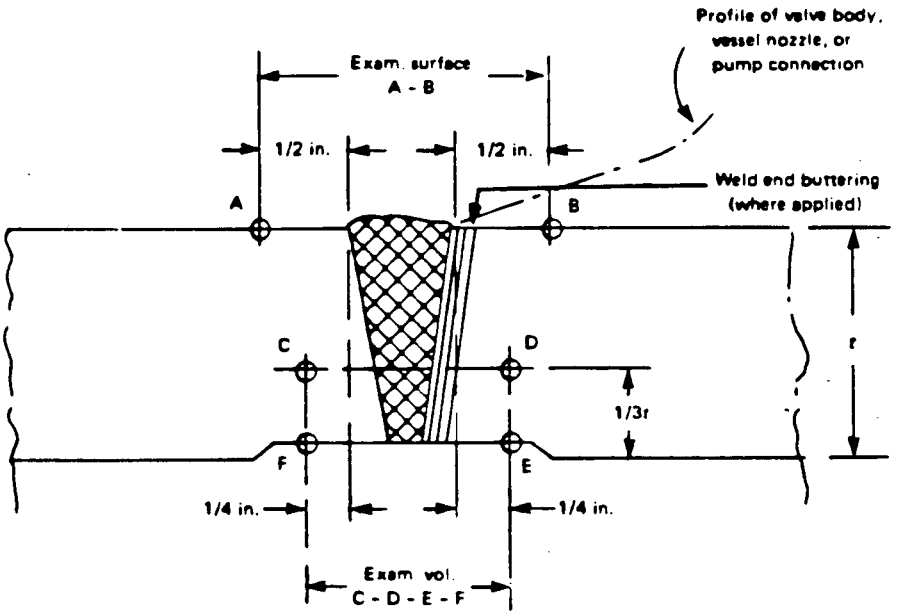

(c) NPS > 4 in.

FIG. IWB-2500-8 SIMILAR AND DISSIMILAR METAL WELDS IN COMPONENTS AND PIPING (CONT'D)

FORM 46446

Reference: Section XI 1983 Edition Page 81

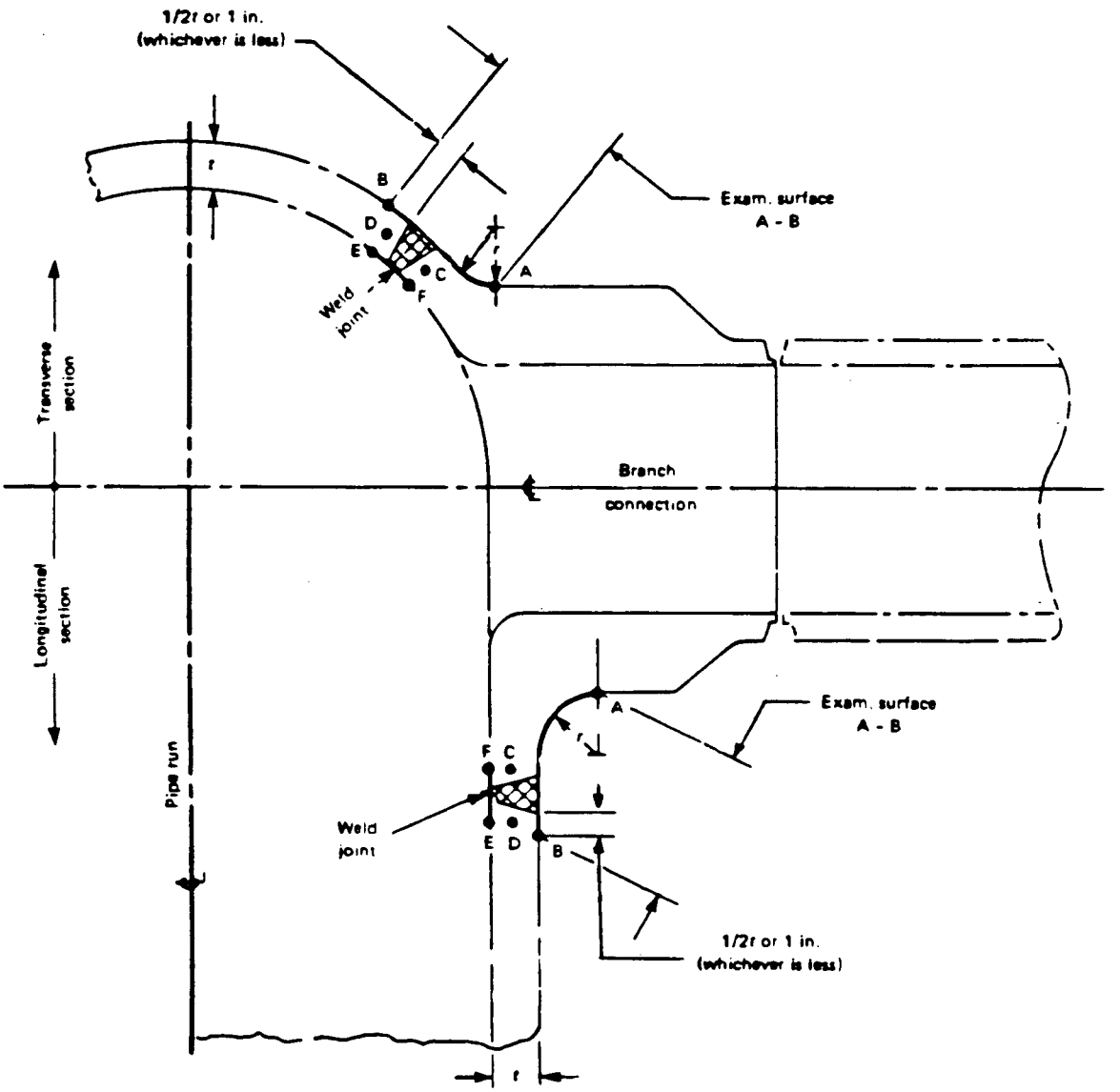

GENERAL NOTE:
Examination volumes C - D - E - F are defined per Fig. IWB-2500-8.

FIG. IWB-2500-9 PIPE BRANCH CONNECTION

FORM 46446

Reference: Section XI 1983 Edition Page 82

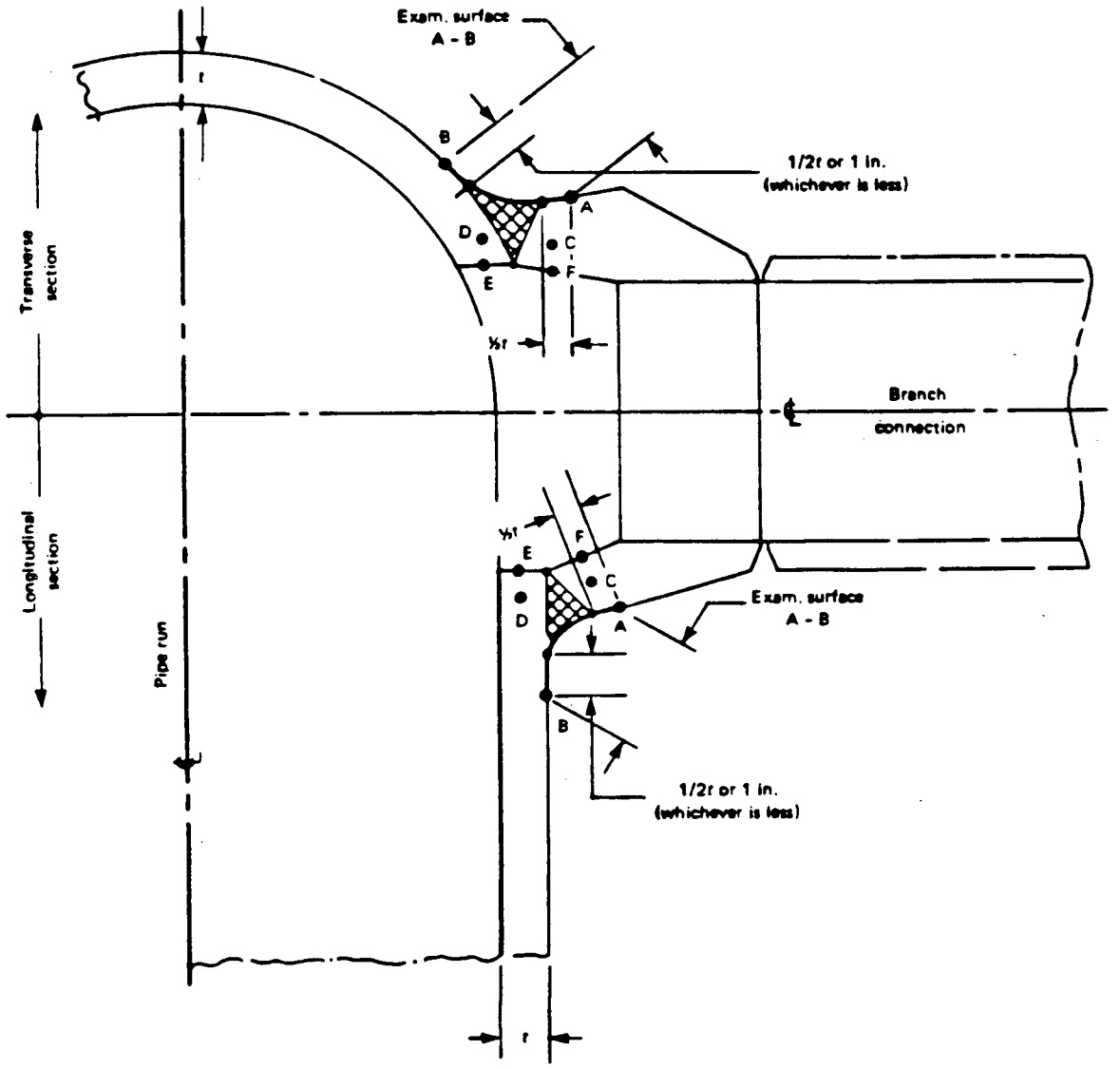

GENERAL NOTE:
Examination volumes C - D - E - F are defined per Fig. IWB-2500-8.

FIG. IWB-2500-10 PIPE BRANCH CONNECTION

FORM 46446

Reference: Section XI 1983 Edition Page 83

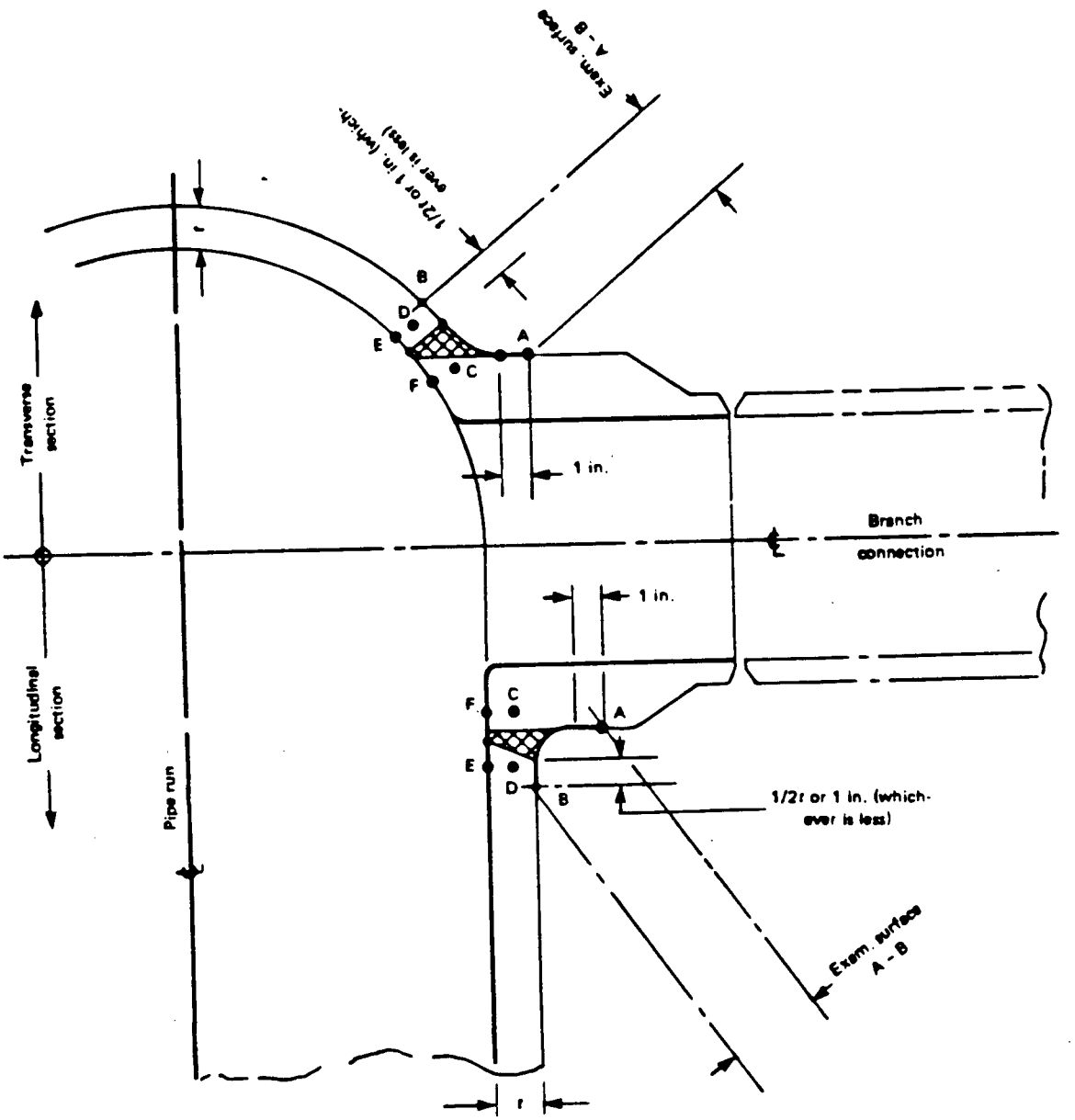

GENERAL NOTE: Examination volumes C - D - E - F are defined per Fig. IWB-2500-8.

FIG. IWB-2500-11 PIPE BRANCH CONNECTION

FORM 46446

Reference: Section XI 1983 Edition Page 84

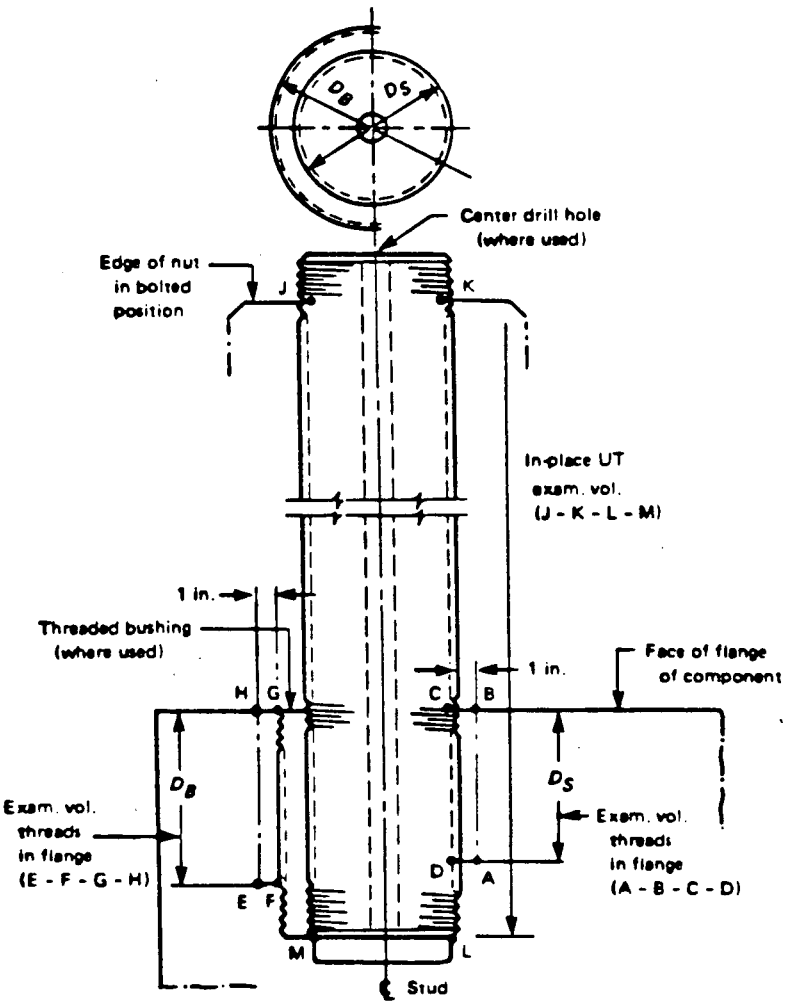

D_B = diameter of the threaded bushing
D_S = diameter of the stud

FIG. IWB-2500-12 CLOSURE STUD AND THREADS IN FLANGE STUD HOLE

FORM 46446

Reference: Section XI 1983 Edition Page 85

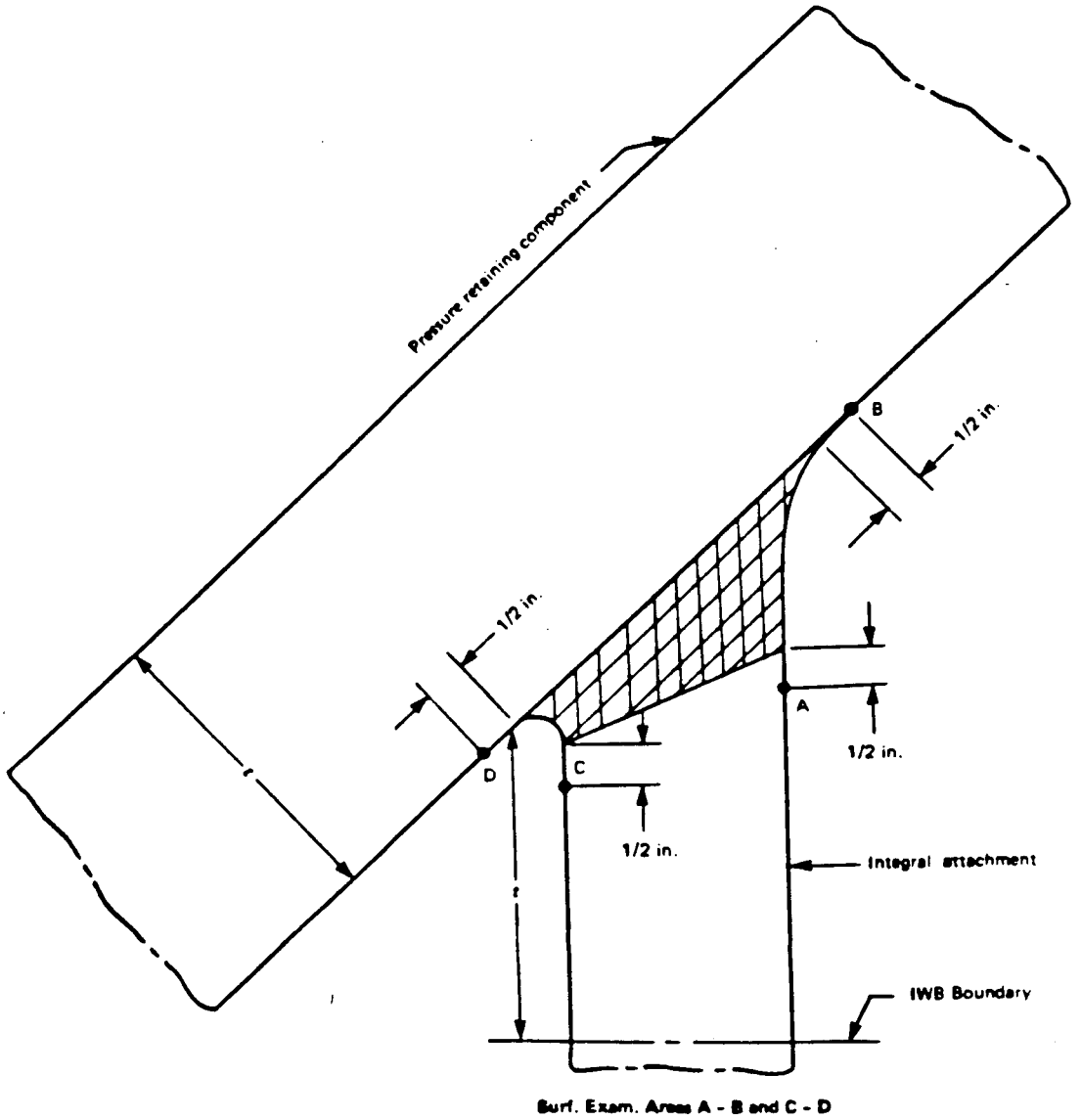

FIG. IWB-2500-13 INTEGRAL ATTACHMENT WELD

FORM 48446

Reference: Section XI 1983 Edition Page 86

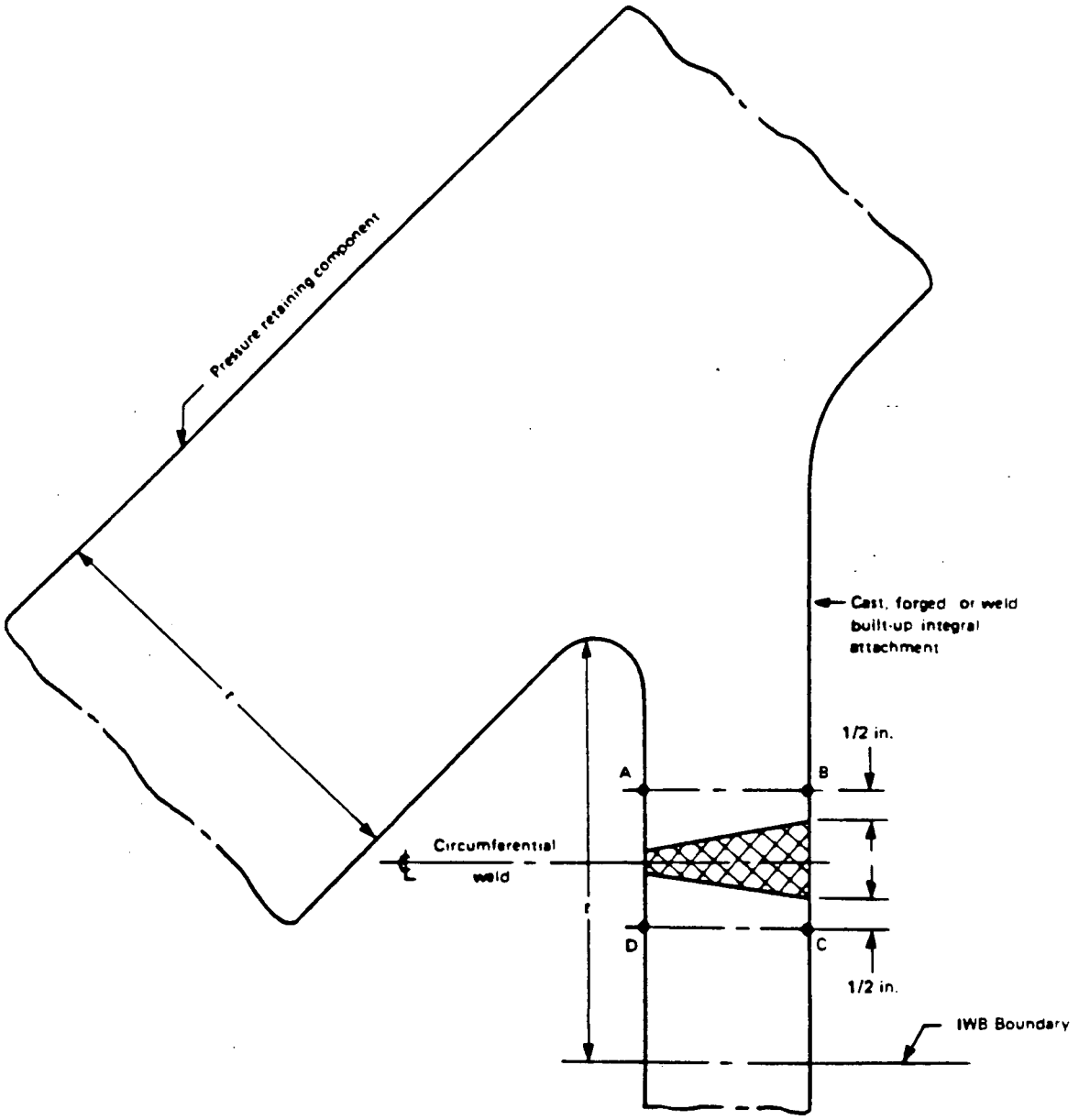

FIG. IWB-2500-14 SUPPORT CIRCUMFERENTIAL WELD JOINT

Reference: Section XI 1983 Edition Page 87

FORM 46446

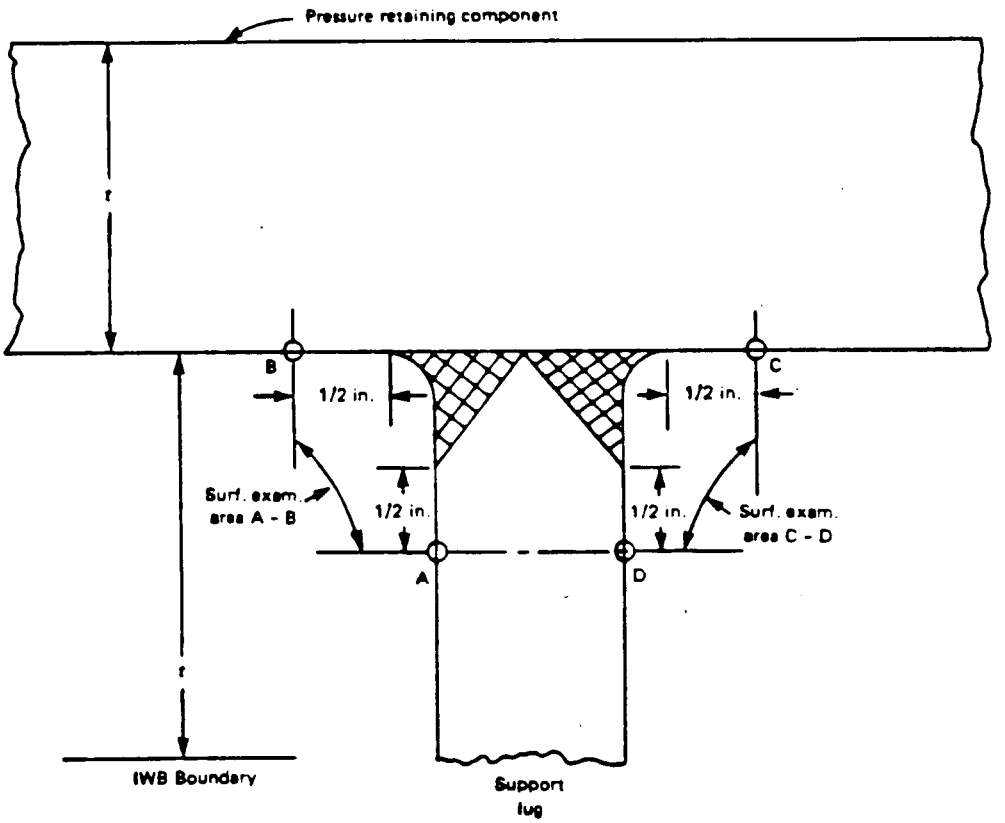

FIG. IWB-2500-15 INTEGRAL ATTACHMENT

Reference: Section XI 1983 Edition Page 88

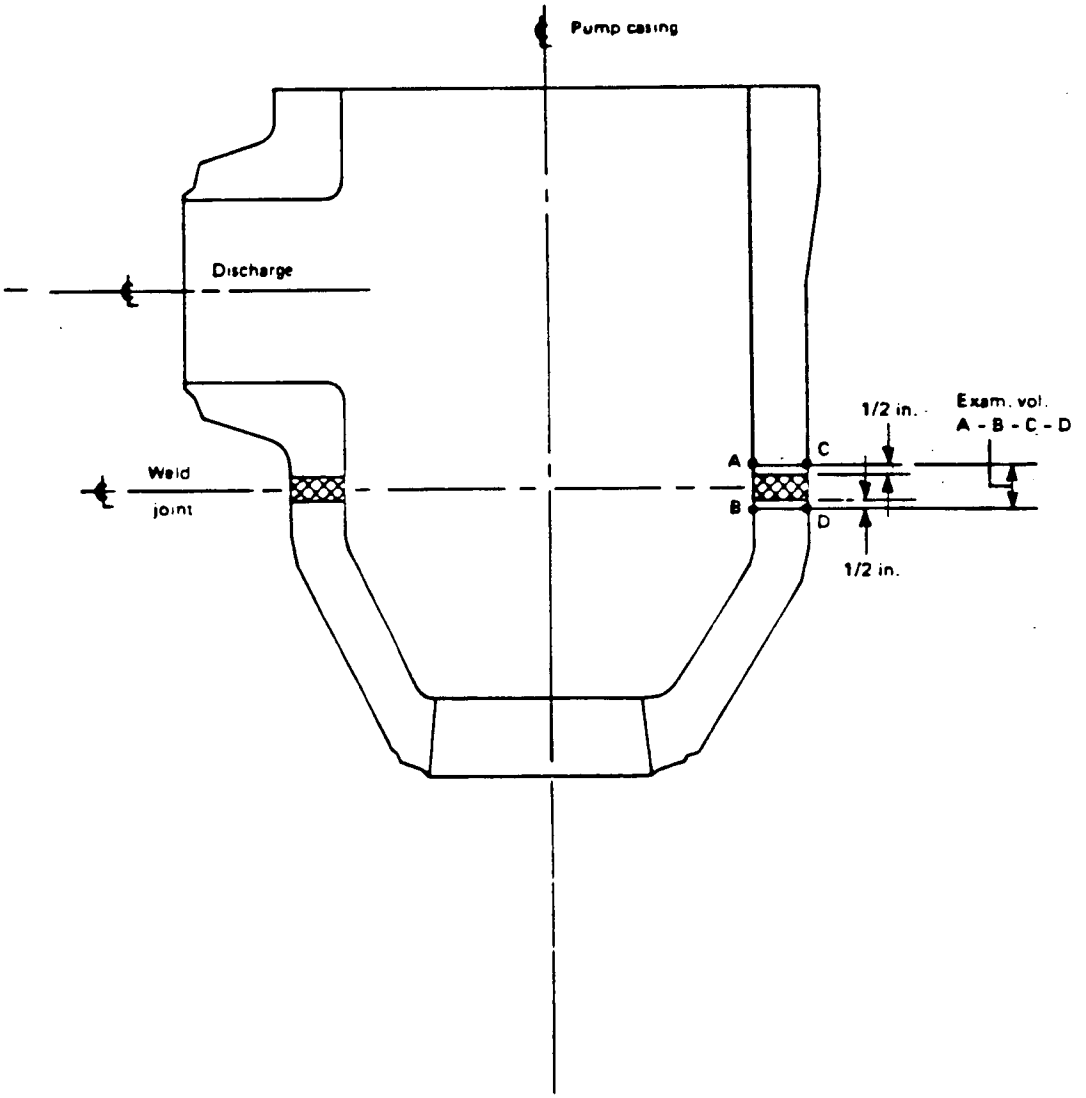

FIG. IWB-2500-16 PUMP CASING WELD
[Type F Pump (Section III)]

FORM 46446

Reference: Section XI 1983 Edition Page 89

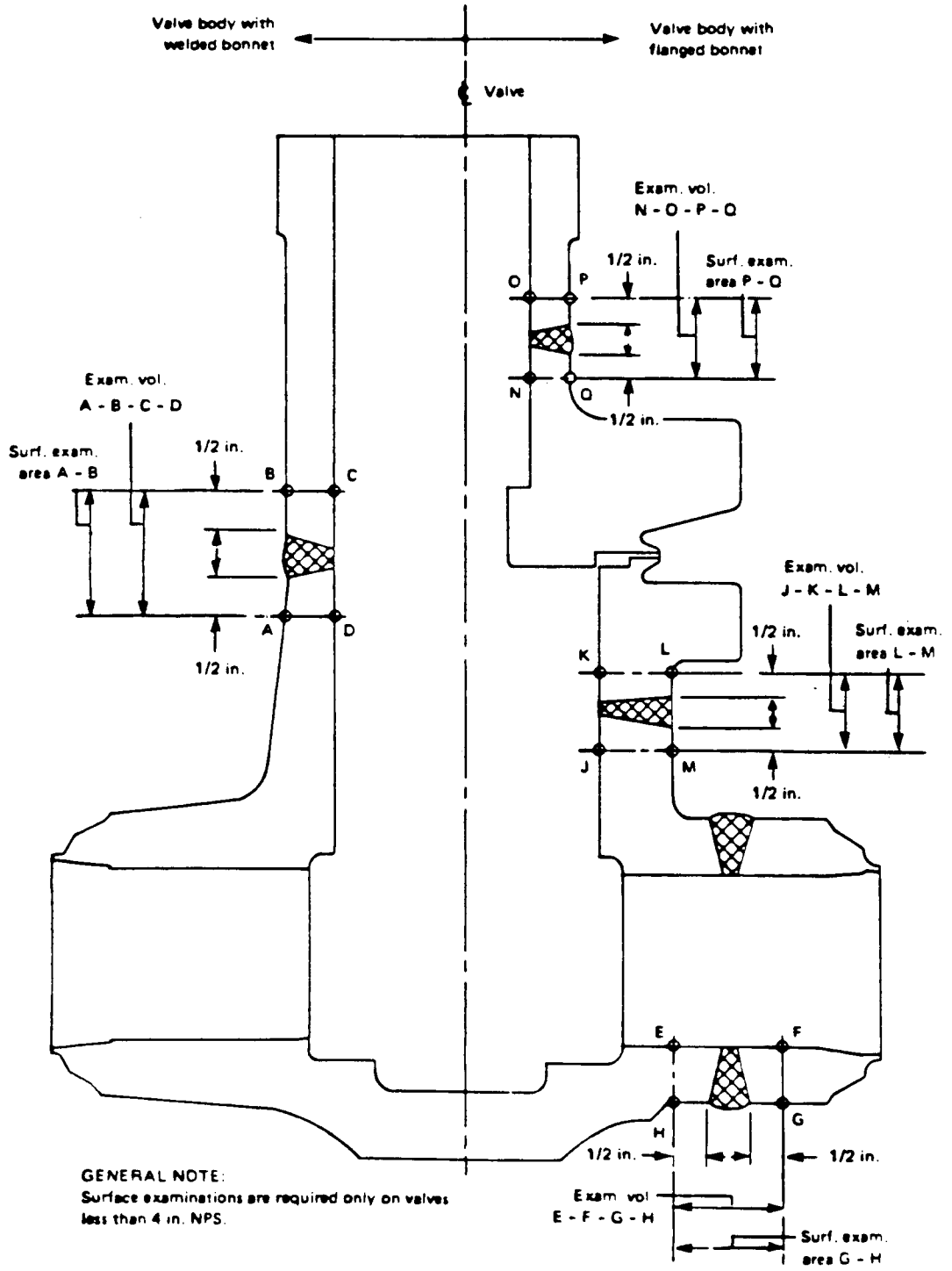

GENERAL NOTE:
Surface examinations are required only on valves less than 4 in. NPS.

FIG. IWB-2500-17 VALVE BODY WELDS

FORM 46448

FORM 46446

Reference: Section XI 1983 Edition Page 90

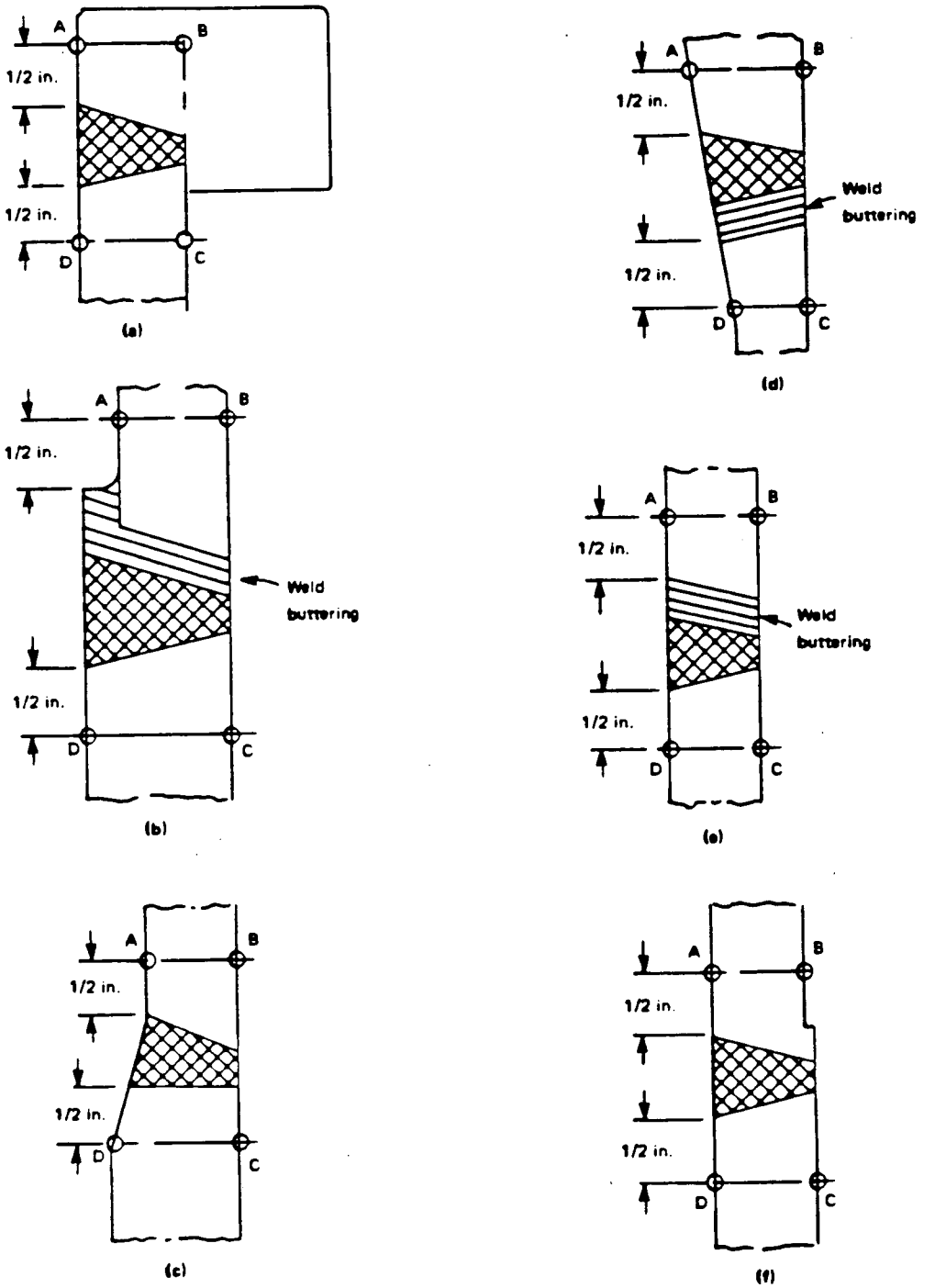

Examination Volume A - B - C - D

Surface Examination Area A - D

FIG. IWB-2500-18 CONTROL ROD DRIVE HOUSING WELDS

Reference: Section XI 1983 Edition Page 131

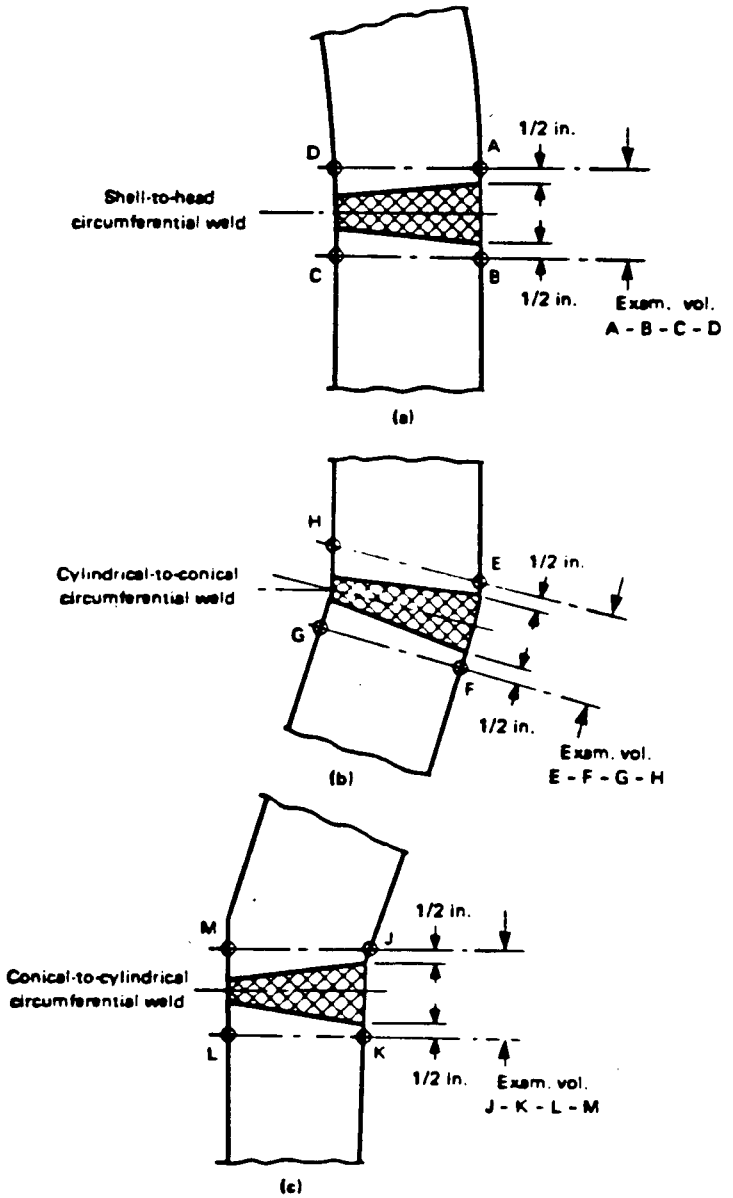

FIG. IWC-2500-1 VESSEL CIRCUMFERENTIAL WELDS

FORM 46446

Reference: Section XI 1983 Edition Page 131

FORM 46446

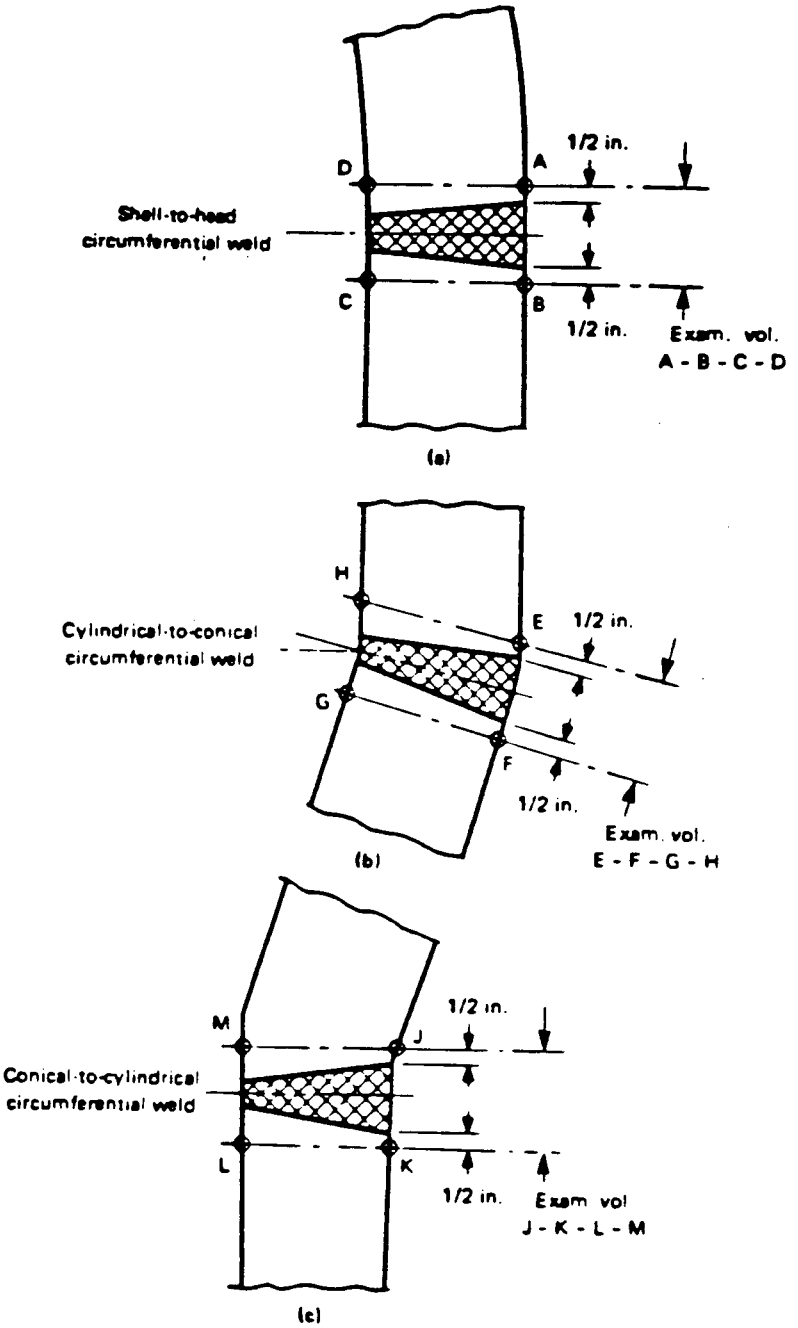

FIG. IWC-2500-1 VESSEL CIRCUMFERENTIAL WELDS

Reference: Section XI 1983 Edition Page 132

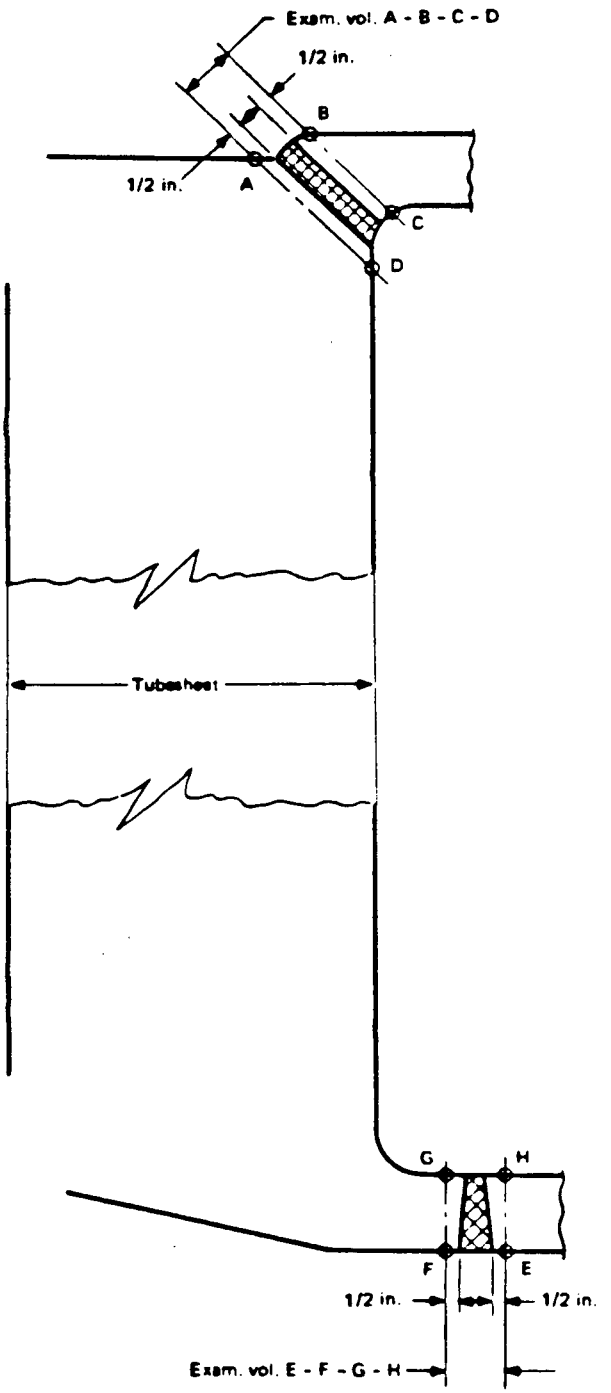

FIG. IWC-2500-2 TYPICAL TUBESHEET-TO-SHELL CIRCUMFERENTIAL WELDS
(Steam Generator Designs)

FORM 46446

Reference: Section XI 1983 Edition Page 133

FORM 46446

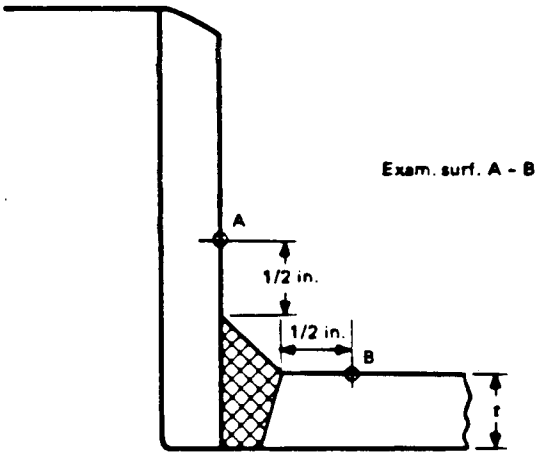

(a)

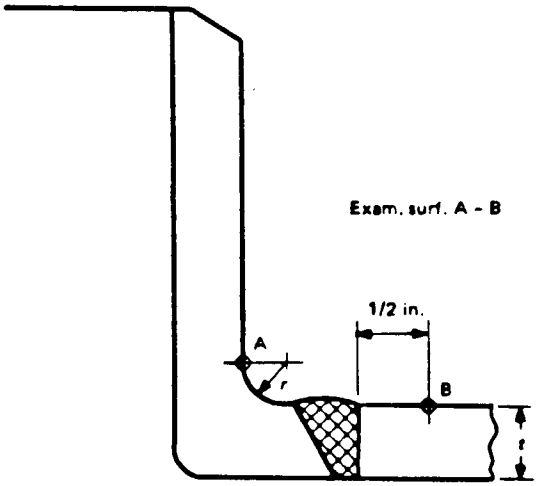

(b)

GENERAL NOTE:
Nozzle sizes over 4 in. NPS; vessel thickness $t \leq 1/2$ in.

FIG. IWC-2500-3 NOZZLE-TO-VESSEL WELDS

FORM 46446

Reference: Section XI 1983 Edition Page 134

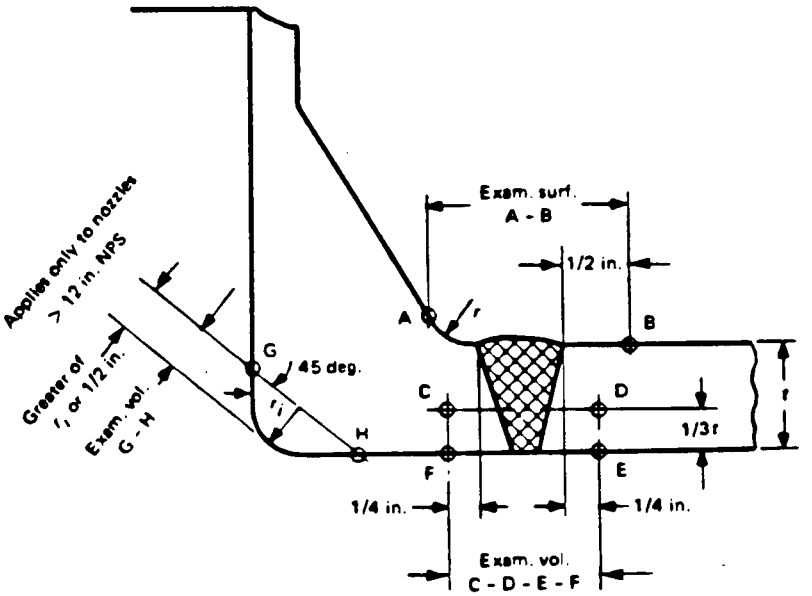

(a)

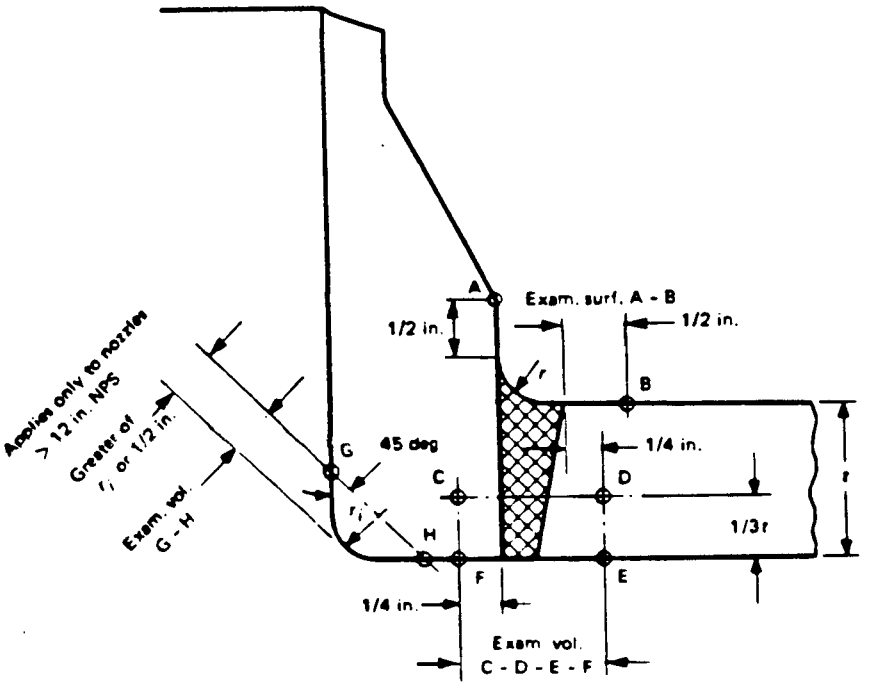

(b)

GENERAL NOTE Nozzle sizes over 4 in. NPS, vessel thickness over 1/2 in.

FIG. IWC-2500-4 NOZZLE-TO-VESSEL WELDS

Reference: Section XI 1983 Edition Page 135

FORM 46446

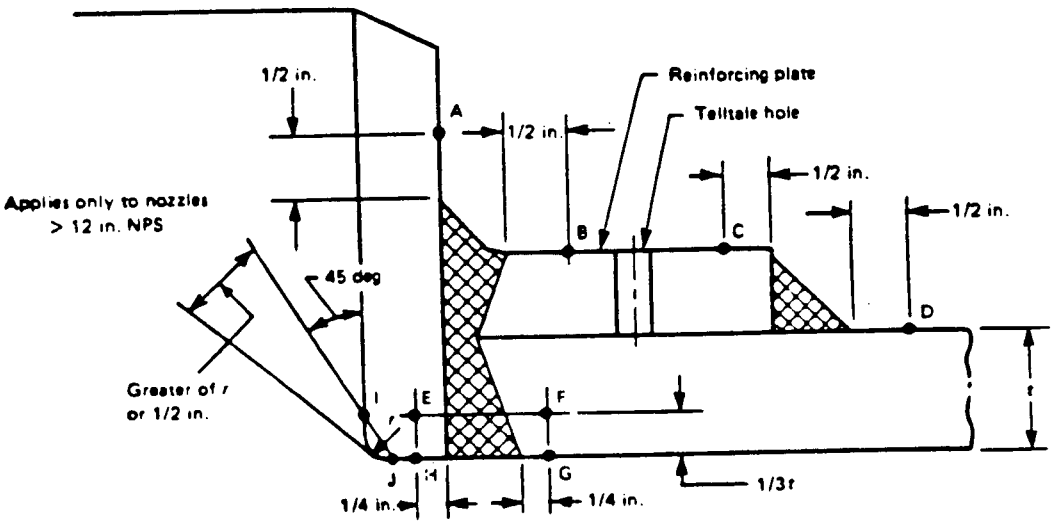

Exam. Surf. A - B and C - D
Exam. Vol. E - F - G - H and I - J

(c)

FIG. IWC-2500-4 NOZZLE-TO-VESSEL WELDS (CONT'D)

Reference: Section XI 1983 Edition Page 136

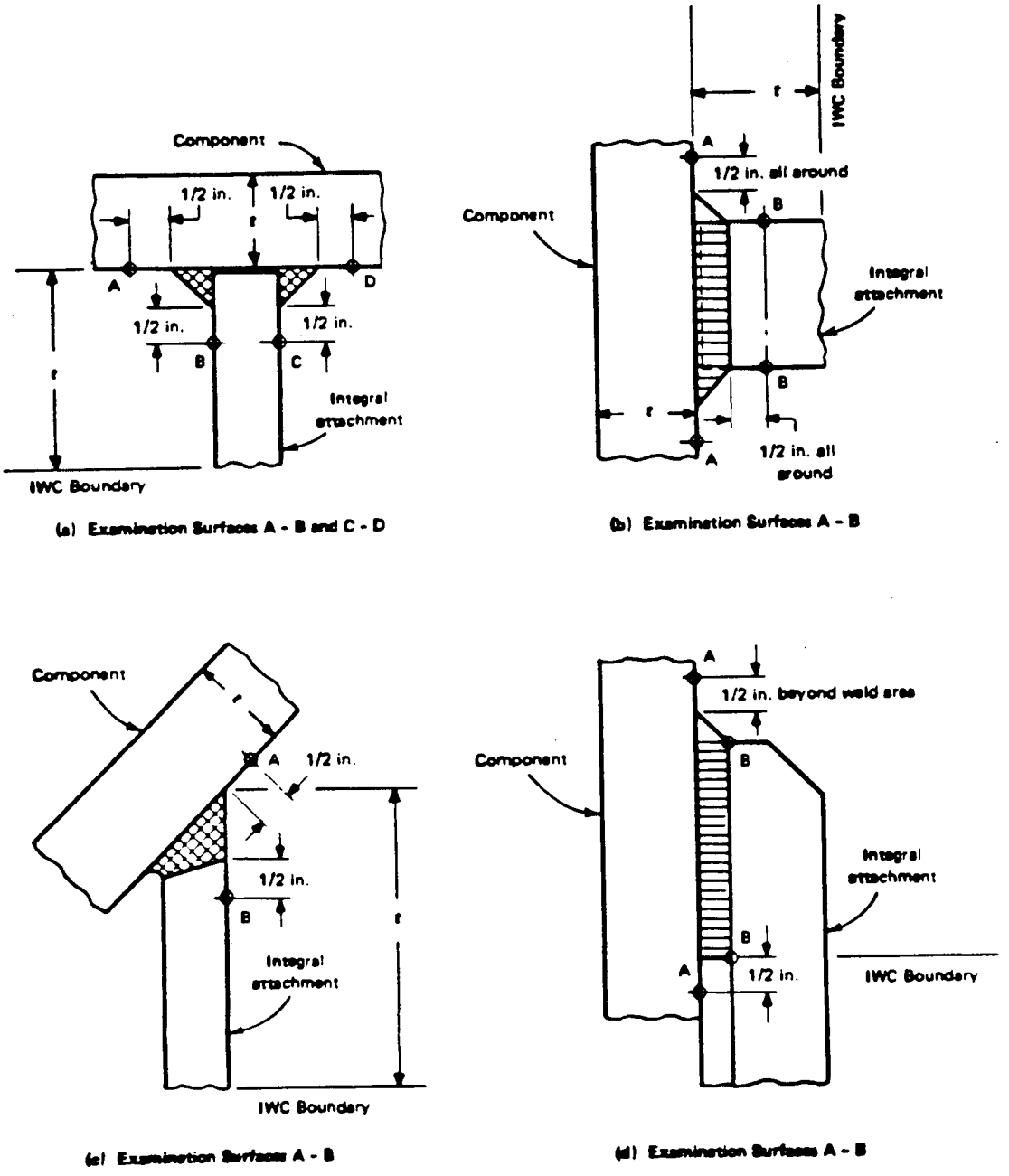

FIG. IWC-2500-5 INTEGRALLY WELDED ATTACHMENTS

FORM 46448

Reference: Section XI 1983 Edition Page 137

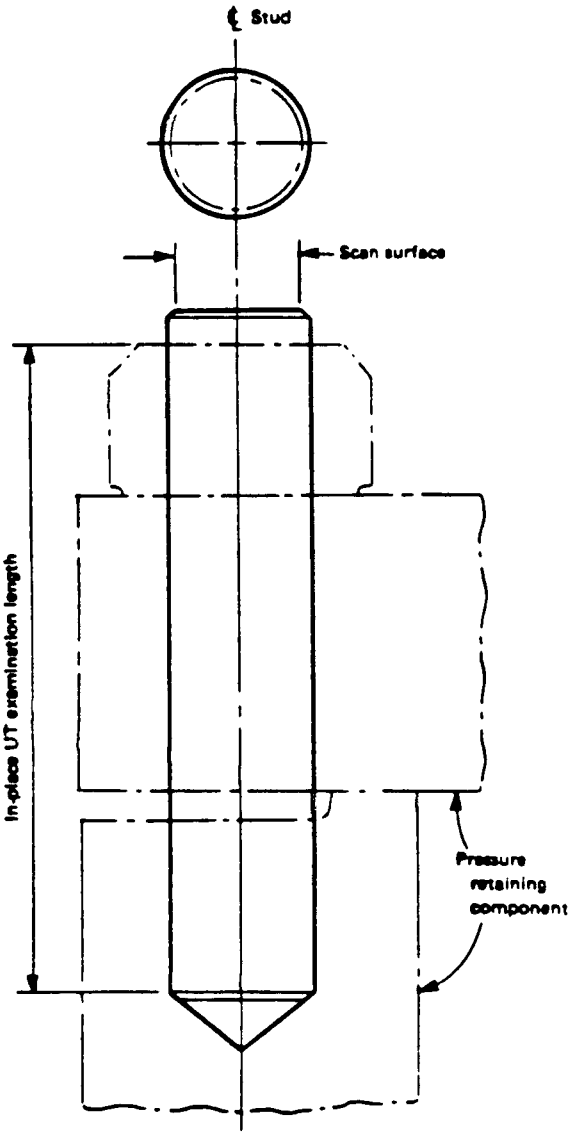

FIG. IWC-2500-6 PRESSURE RETAINING BOLTING

FORM 46446

Reference: Section XI 1983 Edition Page 138

FORM 46446

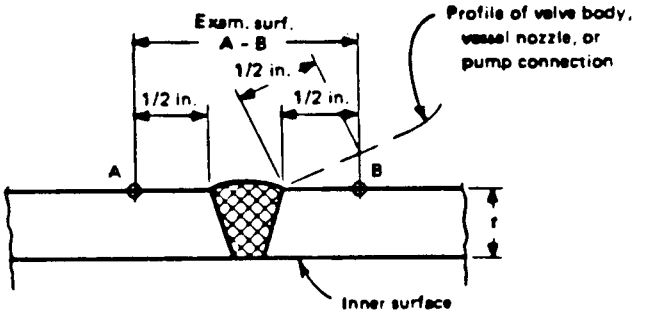

(a) Nominal Pipe Wall Thickness $t \leq 1/2$ in.

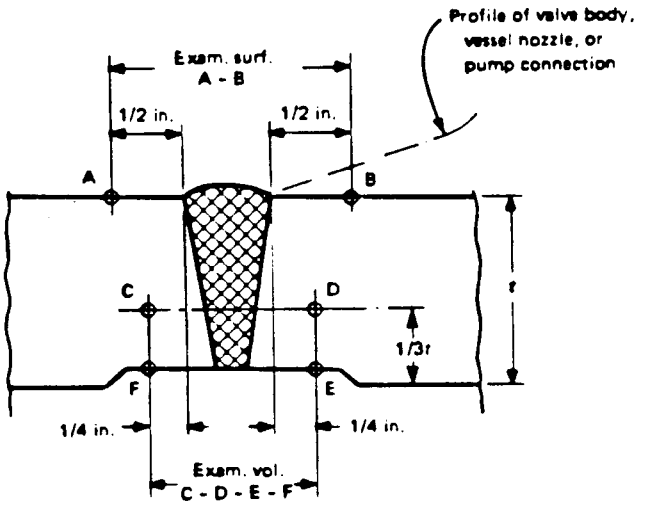

(b) Nominal Pipe Wall Thickness $t > 1/2$ in.

FIG. IWC-2500-7 WELDS IN PIPING

Reference: Section XI 1983 Edition Page 139

FORM 46446

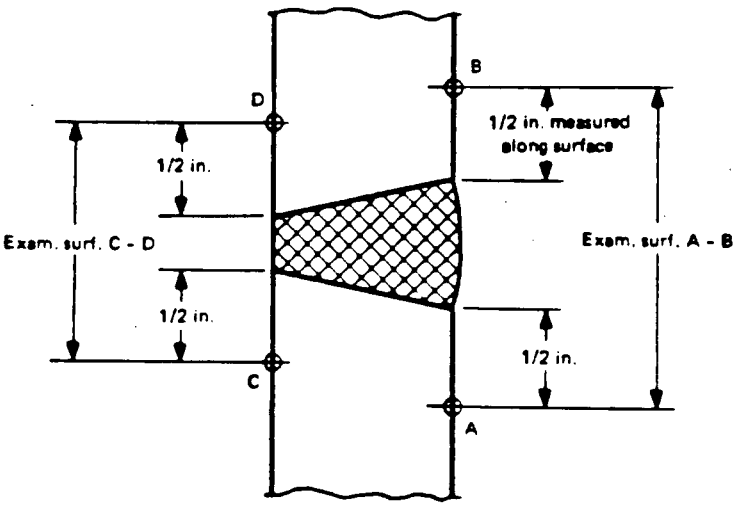

FIG. IWC-2500-8 WELDS IN PUMP CASING AND VALVE BODIES

Reference: Section XI 1983 Edition Page 140

FORM 46446

Examination Surface A - B Around Branch Connection

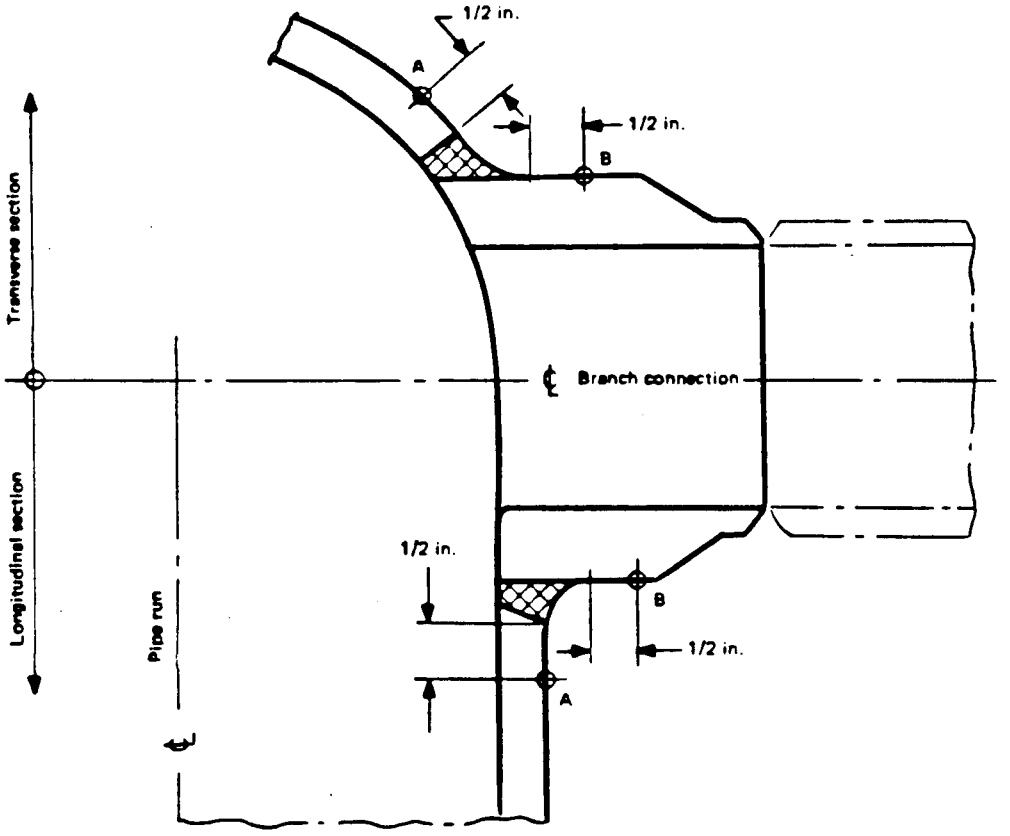

FIG. IWC-2500-9 BRANCH CONNECTION WELDS

Reference: Section XI 1983 Edition Page 141

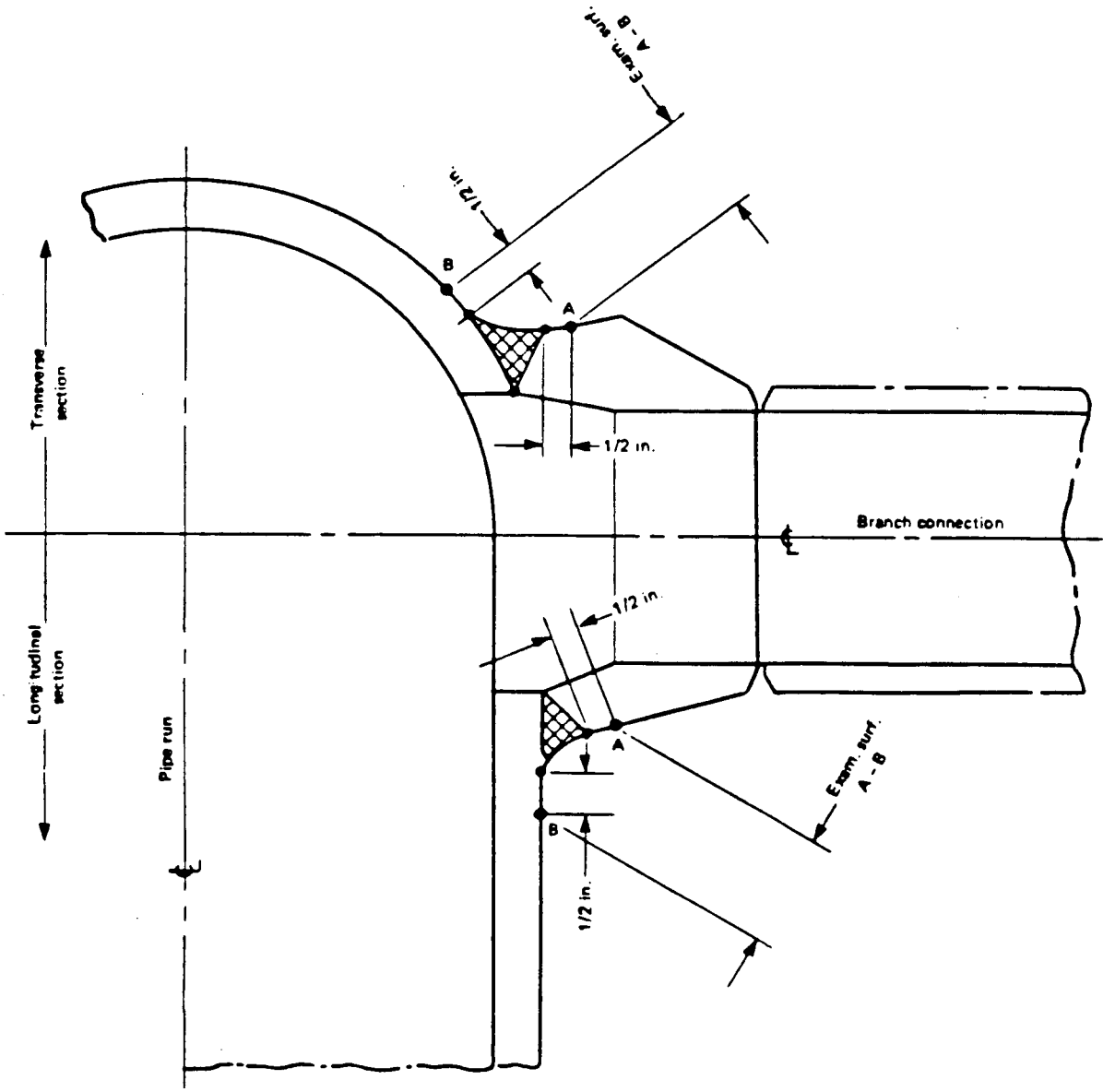

FIG. IWC-2500-10 PIPE BRANCH CONNECTION

FORM 46446

Reference: Section XI 1983 Edition Page 142

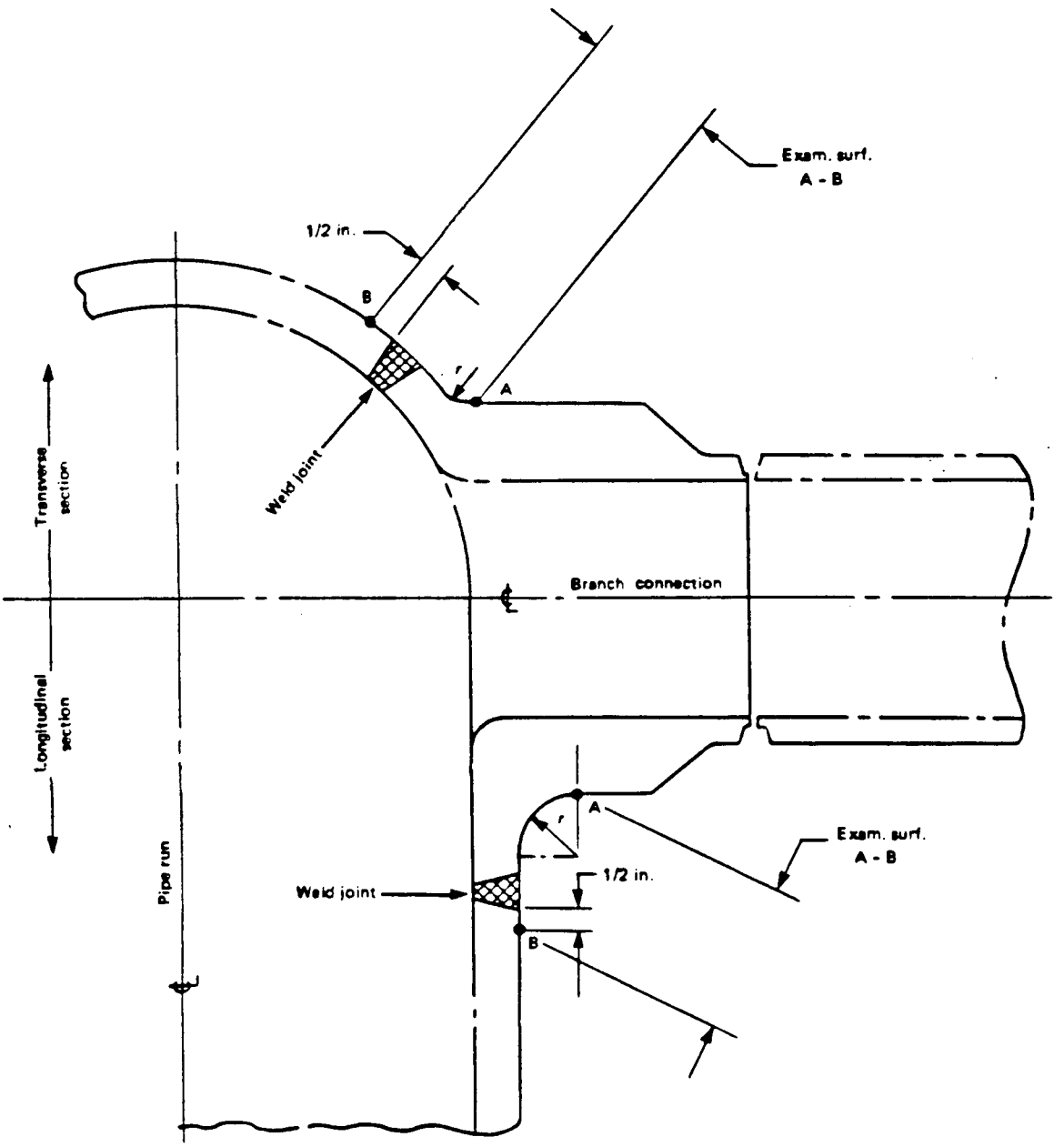

FIG. IWC-2500-11 PIPE BRANCH CONNECTION

FORM 46446

Reference: Section XI 1983 Edition Page 143

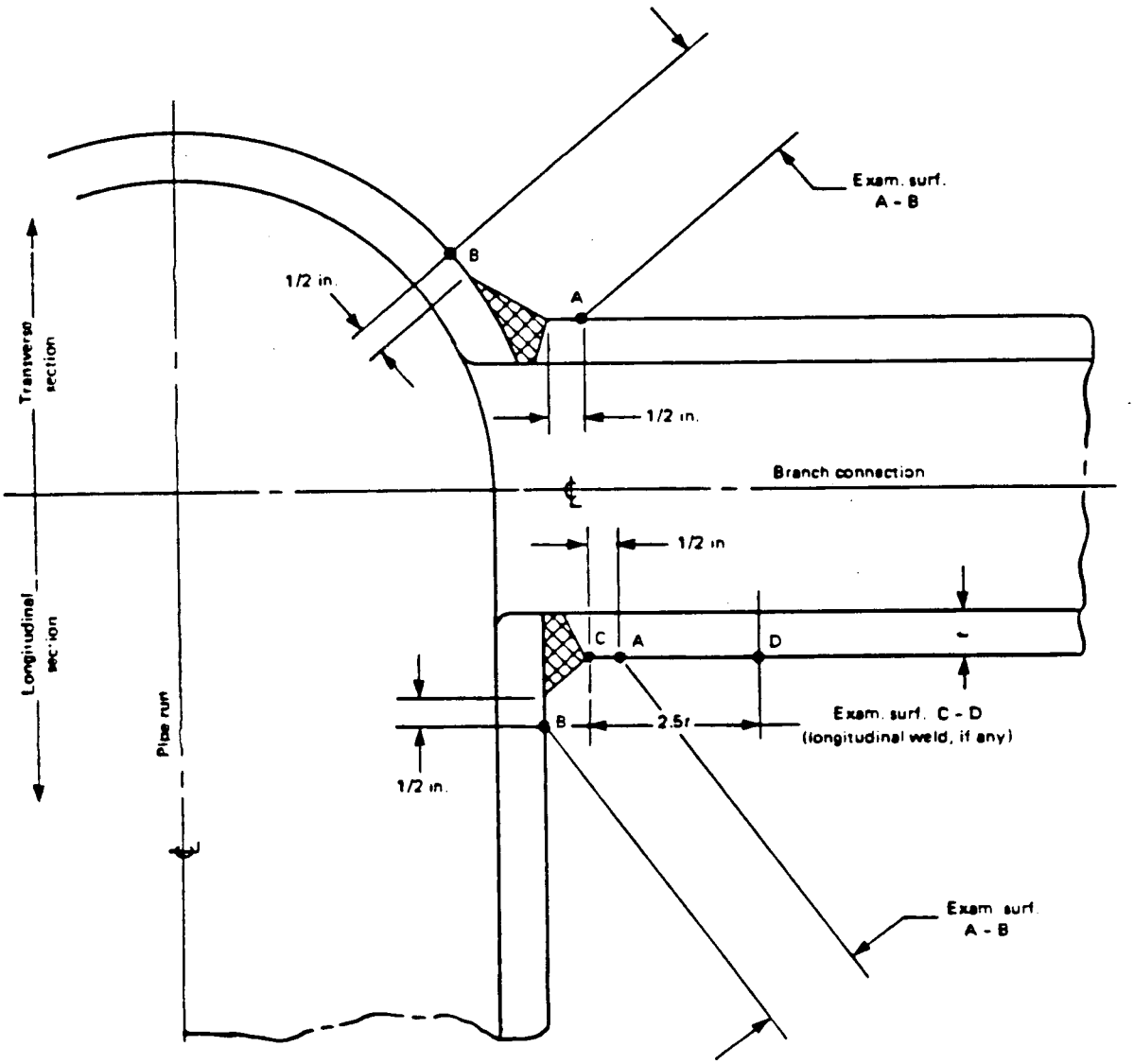

FIG. IWC-2500-12 PIPE BRANCH CONNECTION

FORM 46445

Reference: Section XI 1983 Edition Page 144

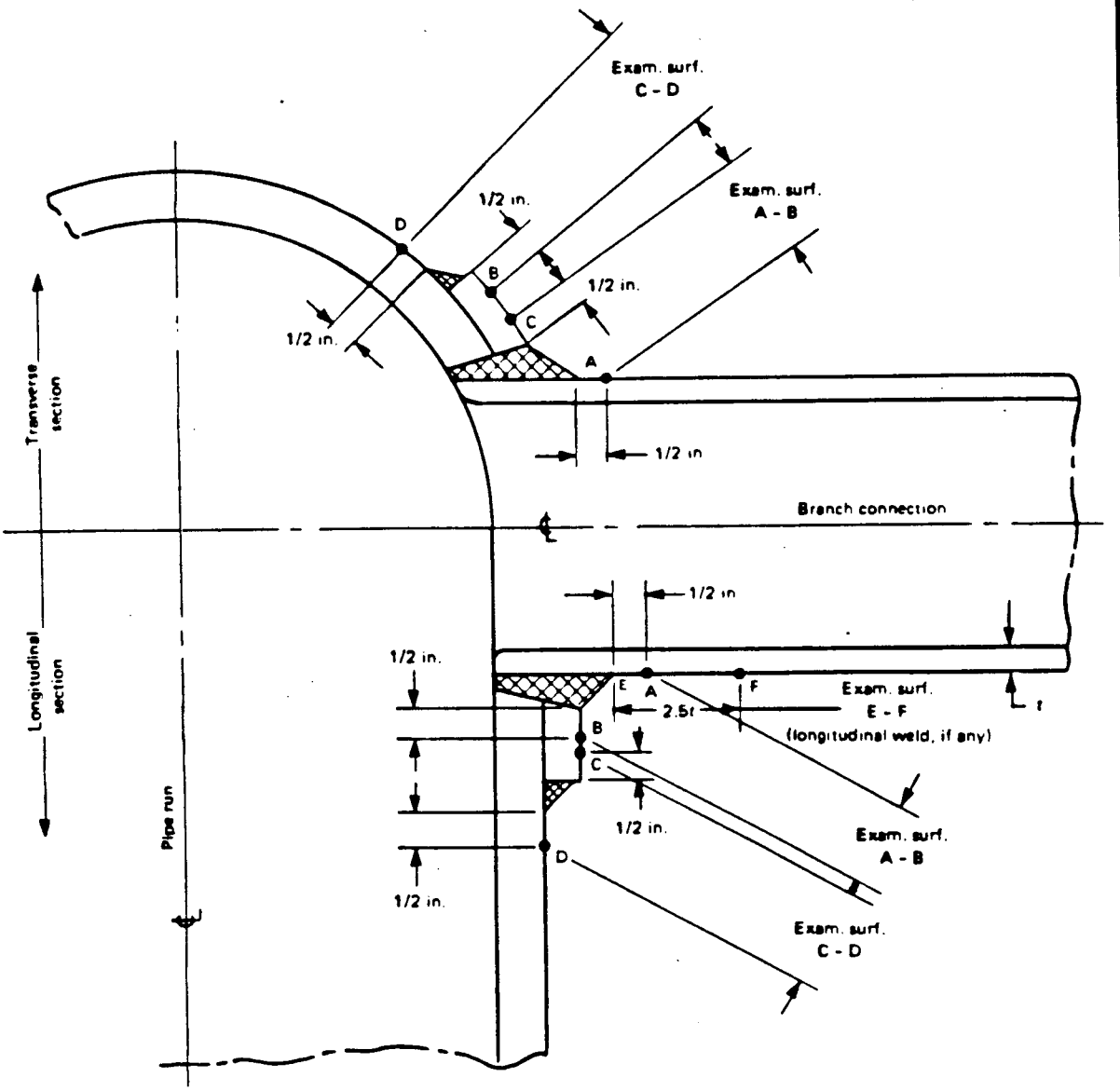

FIG. IWC-2500-13 PIPE BRANCH CONNECTION

FORM 46446

Reference: Section XI 1983 Edition Page 192

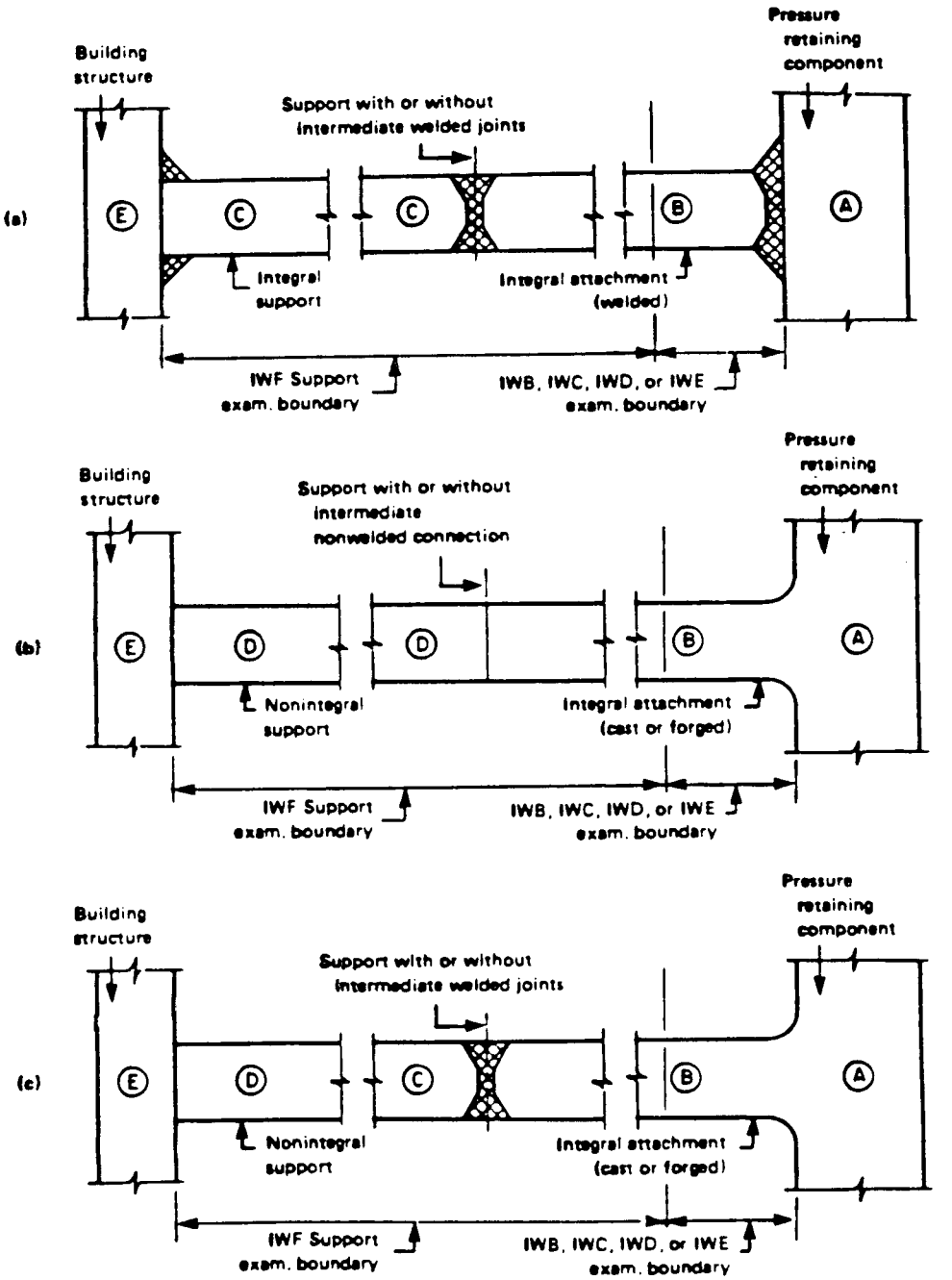

FIG. IWF-1300-1 ILLUSTRATIONS OF TYPICAL SUPPORT EXAMINATION BOUNDARIES

FORM 46446

Reference: Section XI 1983 Edition Page 193

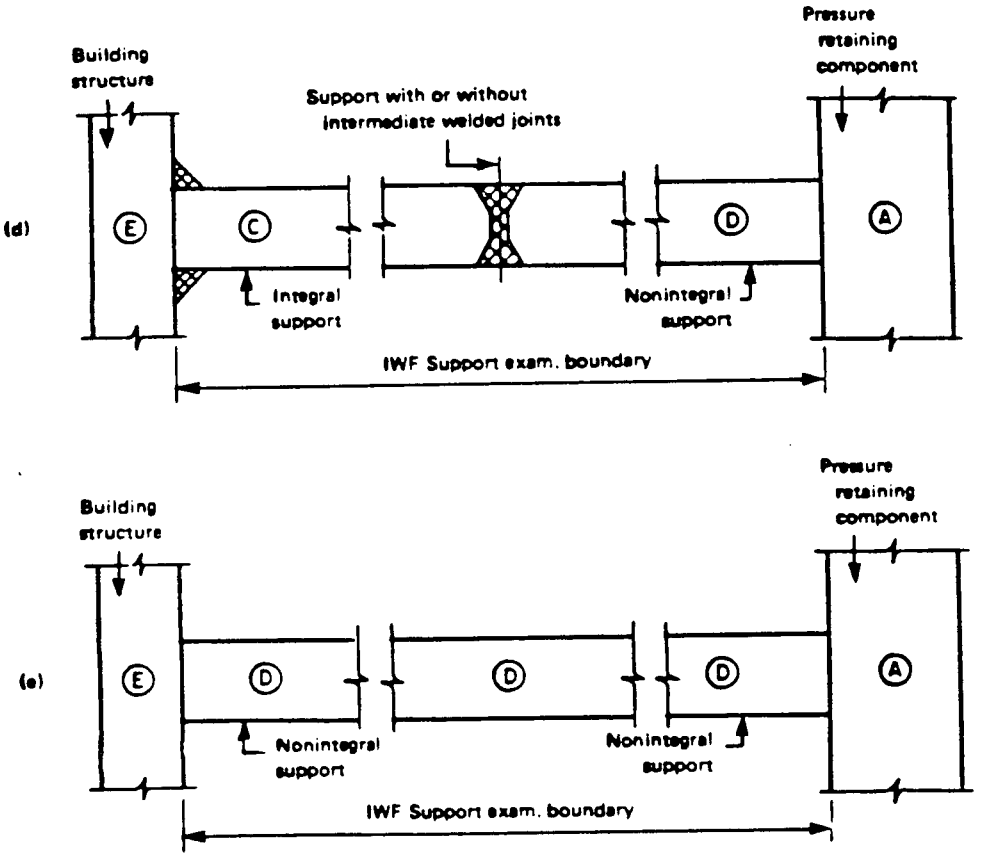

FIG. IWF-1300-1 ILLUSTRATIONS OF TYPICAL SUPPORT EXAMINATION BOUNDARIES (CONT'D)

FORM 46446