DRAFT

POWER AUTHORITY OF THE STATE OF NEW YORK

INDIAN POINT 3 NUCLEAR POWER PLANT

SYSTEMS INTERACTION STUDY

Prepared for the Power Authority of the State of New York

By

EBASCO SERVICES INCORPORATED

8305060440 830503
PDR ADOCK 05000286
P PDR

DRAFT

POWER AUTHORITY OF THE STATE OF NEW YORK

INDIAN POINT 3 NUCLEAR POWER PLANT

SYSTEMS INTERACTION STUDY

VOLUME I

CONTENTS

SECTION	TITLE	PAGE
Chapter 1		
1.0	INTRODUCTION AND GENERAL DESCRIPTION	1
Chapter 2		
2.0	BACKGROUND	2
Chapter 3		
3.0	OBJECTIVE AND SCOPE	5
3.1	Objectives	5
3.2	Scope	5
Chapter 4		
4.0	STUDY TEAM ORGANIZATION	7
4.1	PASNY Team Organization	7
4.2	Ebasco Team Organization	7
Chapter 5		
5.0	METHODOLOGY	10
5.1	Purpose	10
5.2	Initial Activities	10
5.3	Interconnected Systems Interaction	10
5.3.1	Identification of Interconnected Systems	10
5.3.2	Plant Operating Mode	11
5.3.3	Analysis Techniques for Interconnected Systems	11
5.3.3.1	General	11
5.3.3.2	Functional Tables and Logic Diagrams	12
5.3.3.3	Criteria for Selecting Random Equipment/Component Failures	13

POWER AUTHORITY OF THE STATE OF NEW YORK

INDIAN POINT 3 NUCLEAR POWER PLANT

SYSTEMS INTERACTION STUDY

VOLUME I

CONTENTS (Cont'd)

SECTION	TITLE	PAGE
CHAPTER 5		
5.0	METHODOLOGY (Cont'd)	
5.4	Non-Connected Systems Interactions	14
5.4.1	Identification of Nonconnected Systems	14
5.4.2	Plant Operating Mode	14
5.4.3	Failure Criterion	15
5.4.4	Analysis Techniques	15
5.4.4.1	Seismically Induced Systems Interactions	16
5.4.4.2	Pipe Failure Induced Systems Interactions	18
5.4.4.3	Missile (Internal & External) Induced Systems Interactions	18
5.4.4.4	Flooding (Internal & External) Induced Systems Interactions	18
5.4.4.5	Fire Induced Systems Interactions	19
5.4.4.6	Severe Environment Induced Systems Interactions	19
CHAPTER 6		
6.0	EVALUATION CRITERIA	20
6.1	Interconnected Systems	20
6.2	Non-Connected Systems	20
6.2.1	Evaluation of Sources	20
6.2.2	Modification Criteria	26
	Table 6-1	
	Figure 6-1	
	Figure 6-2	
	Figure 6-3	
	Figure 6-4	

POWER AUTHORITY OF THE STATE OF NEW YORK

INDIAN POINT 3 NUCLEAR POWER PLANT

SYSTEMS INTERACTION STUDY

VOLUME I

CONTENTS (Cont'd)

SECTION	TITLE	PAGE
7.0	QUALITY ASSURANCE	31
7.1	General	31
7.2	Analysis Criteria and Basis	31
7.3	Internal Analysis Reviews	31
7.4	Analysis Verification	32
7.5	Data Package	32
7.6	Records	32
7.7	Types of Documents	32
7.8	Storage and Security of Records	33
7.9	Audits	33
7.10	Audit Results, Evluation and Reprot	33
7.11	Reaudit	33
7.12	Audit Program Review	33
CHAPTER 8		
8.0	REFERENCES	34

INDIAN POINT 3 NUCLEAR POWER PLANT

SYSTEM INTERACTION STUDY

CHAPTER 1

1.0 INTRODUCTION

This report documents an effort to address the concerns of systems interactions. The identification, evaluation, and correction or modification of adverse systems interactions, if any, will enhance the level of safety from the continued operation of the Indian Point 3 Nuclear Power Plant.

This report was prepared by the Power Authority of the State of New York in conjunction with Ebasco Services Incorporated and consists presently of 23 volumes. Described in this report are the general methods used to identify and evaluate systems interactions (volume I) and, in particular, the applicability of these methods to twenty three (23) systems determined to be important to plant safety.

INDIAN POINT 3 NUCLEAR POWER PLANT

SYSTEMS INTERACTION STUDY

CHAPTER 2

2.0 BACKGROUND

From a historical point of view it is noted that the Nuclear Regulatory Commission's (formerly AEC) General Design Criteria (GDC) for nuclear power plants and the Indian Point 3 Nuclear Power Plant (IP-3) design were developed concurrently during the late 1960's and early 1970's. The GDC are now incorporated in the NRC's regulations as Appendix A to 10CFR Part 50.

While Criteria 2, 3 and 4 of the GDC require that structures, systems and components important to safety be able to accommodate natural phenomena such as earthquakes, the effects of fires, and other environmental effects without loss of capability to perform their intended safety functions, the systems interaction issue was not specifically raised as a potential concern until the Advisory Committee on Reactor Safeguards (ACRS) formally raised the question in 1974.

In 1977 systems interaction formally appeared as NRC Generic Task Action Plan A-17. The first phase of this NRC plan has just recently been completed with the publication of the Sandia Report "Final Report - PHASE I Systems Interaction Methodology Applications Program". TMI-2 events have to a large extent been factored into this systems interaction plan. Additional detail on the regulatory developments on systems interaction are found in:

a) Generic Task Action Plan A-17 (NUREG 0606 Rev. 2)
   Systems Interaction In Nuclear Power Plants.

b) NUREG 0510

   Identification of Unresolved Safety Issues Relating To Nuclear Power Plants.

c) NRC Information Notice 79-22

   Potential Interactions Between Non-Safety Related Control Systems And Safety Systems.

d) NUREG 0585

   TMI-2 Lessons Learned Task Force Final Report
   Recommendation 9 - Review Of Safety Classifications And Qualifications.

2.0 BACKGROUND (Cont'd)

e) NUREG 0660

Action Plans For Implementing The Recommendations Of the President's Commission And Other Studies Of TMI-2 Accident.

TASK II.C.I - Systems Engineering, Reliability Engineering And Risk Assessment.

The NRC in the spring of 1981 distributed three reports prepared by independent laboratories which address the different methodologies being utilized by various utility groups, consultants, etc. They are, NUREG/CR-1859, UCRL-53016, Systems Interaction: "State-of-the-Art Review and Methods Evaluation", prepared by Lawrence Livermore Laboratory for NRC-ONRR, November, 1980; NUREG/CR-1901, BNL-NUREG-51333, "Review and Evaluation of System Interactions Methods", prepared by Brookhaven National Laboratory for NRC-ONRR, January, 1981; NUREG/CR-BMI-2055, R-2 "Report on Review of Systems Interaction Methodologies", prepared by Battelle Columbus Laboratories for NRC-ONRR, January, 1981.

Discussions between the industry via the Atomic Industrial Forum (AIF) and NRC continued throughout 1981 without specific guidelines being generated for use in evaluating system interactions. With the formation of the Systems Interaction Section of the Reliability and Risk Assessment Branch (RRAB) the first evidence of specific guidance was formulated. Over the past year and specifically during that period of time while the preliminary issue of this report was being reviewed by the SI Section of RRAB, there has been an effort to provide a reasonable boundary for the overall SI topic and thereby focus in on those key issues which would make an SI study both meaningful and effective.

In order to derive a working definition of systems interaction, it is necessary to consider a number of associated concepts. In the design of a nuclear power plant provisions are made to make the release of radioactivity to the environment an extremely unlikely event by providing independent ways in which a safety function can be performed. These provisions are expressed in terms of redundancy and diversity so that multiple independent system failures would not necessarily result in a safety function failure. Systems which support safety functions may be designed to interact with each other. These interactions are intentional. An "interaction" of concern results when the conditions in one system affect (degrade) the ability of another system to perform its safety function. Therefore, system interactions are those events that affect the safety of the plant by one system acting upon one or more other systems in a manner not intended by design with emphasis on non-safety, safety types of interactions. A systems interaction analysis involves (1) the systematic search for hidden or inadequately analyzed interconnections or couplings that link safety and non-safety systems in the reactor plant, and (2) the evaluation of the effects of a non-safety system failure (or maloperation) propogated into the safety system by such interconnections/couplings.

It is important to recognize that the systems interaction process is an attempt to reevaluate in a systematic fashion those potential events whose direct effect or natural cascading features could reduce plant safety margin. The criteria employed are considered new only to the extent that effects of nonsafety systems on safety systems are considered in a more thorough fashion. Currently, neither the NRC nor any industry body (such as AIF or ANS) have published any accepted methodology for performing systems interaction analysis.

INDIAN POINT 3 NUCLEAR POWER PLANT

SYSTEM INTERACTION STUDY

CHAPTER 3

3.0 OBJECTIVES AND SCOPE

3.1 OBJECTIVES

The objectives of this study are (1) to develop the methodology and evaluation criteria to be used to identify and evaluate systems interactions and (2) to apply these criteria to a systems interaction review of twenty-three (23) identified systems. (See Auxiliary Diagrams 1 through 23)

During review of the preliminary issue of this report by the SI Section of RRAB, it was agreed explicitly that the threshold for identification of adverse SI's will be a nonsafety system or component failure that leads to the defeat of one train of a safety system or engineered safety feature, even if the remaining train(s) of the affected safety system or ESF could perform the intended safety function. This is the most stringent application of the single failure criterion currently used in the licensing review process; but it was emphasized that it is only to be used as a SI search criterion. SI's identified by applying this search criterion will be evaluated considering the licensing basis for IP-3.

The adoption of such a stringent search criterion is a result of the SI staff's objective of assessing the effectiveness of existing deterministic criteria in achieving independence between safety and nonsafety systems. Through a comprehensive evalution of potential SI's found using this search criteria it is expected that nonsafety/safety system independence/dependencies will be demonstrated and/or found. This objective forms an important part of the rationale for determinations of adequate safety for IP-3 considering the nonsafety failure effects.

3.2 SCOPE

For the "connected system" or process coupled portion of this study, a "dependency analysis" technique is used as the primary means for identifying SI's. In addition, Event Tree/Fault Tree information for individual systems, available through the Z/IP-3 Probabilistic Safety Study (PSS) performed by Picket Lowe and Garrick (PL&G), will be considered when evaluating SI's. For the "nonconnected system" portion of the study, Ebasco investigated the possibility of adverse interactions transported via spatial or physical proximity considerations during design basis events such as earthquake, tornado, fire, high energy pipe rupture, internal or external flooding and internally or externally generated missiles. These latter events were investigated for interactions via the plant walkdown and by a review of reports previously prepared on these subjects.

3.0 OBJECTIVES AND SCOPE (Cont'd)

3.2 SCOPE (Cont'd)

In addition to the above scope, the SI staff during their review emphasized that consideration of operating experience is an important element in the systems interaction analysis. It was concluded that the operating experience at IP-3 can be extrapolated from events that have actually occurred. The suitability/workability of a proposed SI analysis methodology can be demonstrated if it can be shown that application of that methodology will identify links to what has already actually occurred, or that these methods would have identified SI's similar to those that have occurred in the past. To this end the scope of this study was expanded to include a review of the Licensee Event Reports (LER') and Significant Occurrence Reports (SORs) that had been reported during 1980 and the first half of 1981 for the IP-3 facility.

Although this approach appeared to be a satisfactory method for determing the effectiveness of the proposed methodology, its true value can only be assessed upon completion of the study.

Another suggestion that was made by the SI staff was the investigation of using the IP simulator for uncovering system interaction dependencies for the treatment of "first-order" types of SIs. The SI staff believed that to the extent that such a training simulator accurately models at least direct interconnections between safety and nonsafety front line systems and their support systems, it may be possible to do more comprehensive and systematic analysis of their failure effects more easily and efficiently by use of the simulator. It was agreed that as part of the SI effort, an investigation would be made to examine the possibility of using the training simulator on a very preliminary basis. To this end the SI staff was invited to observe and participate in initial trials on September 23-24, 1981 at the Indian Point simulator facility. Subsequent to those trials it was arranged to further investigate the use of the IP simulator for specific malfunctions modeled into the simulator. This activity was accomplished on October 29, 1981. In general the results obtained during the initial trials and the malfunction tests confirmed that the use of the simulator does not effectively uncover SIs between safety and nonsafety systems. This was primarily due to the fact that the simulator is modeled as a training tool consistent with the current operator training programs. Hidden dependencies between safety and nonsafety systems and components is not part of the software package of the simulator.

A complete summary report of the activities of the initial trials and specific malfunction tests that followed will be presented in a separate report. The actions taken on this matter fully address the recommendation by the NRC staff for simulator review and that it has been demonstrated that simulator use is not a useful tool for identifying adverse SIs for the IP-3 facility.

4.0 STUDY TEAM ORGANIZATION (Cont'd)

4.1 PASNY TEAM ORGANIZATION (Cont'd)

The plant walk through team was comprised of the Task Force Leader, Site Engineer, Nuclear Operations Engineer and the Ebasco Systems Interaction multi-disciplinary team personnel.

Figure 4-1 indicates the structure of the Authority's reporting relationships among the Systems Interaction Task Force.

4.2 EBASCO TEAM ORGANIZATION

Within the Ebasco Organization, Systems Interaction Study for the Indian Point 3 Nuclear Power Plant is administered by the Mechanical Engineering Department under the direction of a Project Manager. Personnel from various Ebasco Engineering and Design disciplines are assigned to the project and take functional directions from the Project Engineer.

Figure 4-1 also indicates the reporting relationships among Ebasco Engineering and Design personnel who fulfill the key roles in the Systems Interaction Study.

The responsibilities within the Ebasco Study Team are outlines as follows:

PROJECT MANAGER

The role of the Ebasco Project Manager is to provide central leadership, planning, scheduling, budgeting and coordination of all services supplied by Ebasco to the Authority in addition to developing and administering controls to achieve schedule and budget compliance.

SYSTEMS INTERACTION PROJECT ENGINEER

The role of the Project Engineer who reports to the Project Manager, is to provide advice, guidance, and support to the Project Team in performance of their function, manage the overall engineering effort, and intergrate the multiple engineering activities.

His responsibilities include the following:

a. Writing the System Interaction Study description.

b. Coordinating the efforts of other Ebasco engineering and design disciplines who are preparing the study, preparing implementing procedures, determining study inspection and evaluation criteria, and reviewing resolutions proposed by the Interaction Team.

c. Providing functional and technical direction to the Interaction Team.

INDIAN POINT 3 NUCLEAR POWER PLANT

SYSTEMS INTERACTION STUDY

CHAPTER 4

4.0 STUDY TEAM ORGANIZATION

4.1 PASNY TEAM ORGANIZATION

The Authority retained Ebasco Services Incorporated to assist in the study of systems interactions for Indian Point 3 Nuclear Power Plant.

The Nuclear Support PWR (NS-PWR) Division of the Nuclear Generation (NG) Department in the White Plains office (WPO) has the primary responsibility for accomplishing the Systems Interaction Study.

The Authority's Director of Project Engineering appointed a Task Force Leader from his staff with the concurrence of the Vice President-Nuclear Support PWR, and the Executive Vice President-NG. For the Systems Interaction Study the Authority's IP-3 Supervisory Engineer was the Task Force Leader.

The Task Force Leader is responsible for monitoring and controlling day to day activities and to ensure a sound multi-disciplinary review of work done by Ebasco. This was accomplished by choosing the following Authority personnel to be part of the review team:

Senior Operations & Maintenance Engineer-Nuclear Operations & Maintenance NS-PWR, NG, WPO.

Nuclear Licensing Engineer-Nuclear Licensing NS-PWR, NG, WPO.

Senior Structural Engineer-Design & Analysis Division, Engineering Dept. WPO.

Site Engineer-Technical Services Department, IP-3 Site

QA Engineer-QA Dept, WPO.

4.0 STUDY TEAM ORGANIZATION (Cont'd)

4.2 EBASCO TEAM ORGANIZATION (cont'd)

SYSTEMS INTERACTION PROJECT ENGINEER

d. Reviewing and approving the resolutions proposed by the Interaction Team.

e. Preparing interim reports and the final program report.

f. Communicating the activities of the Interaction Team and the results of the program to the Project Manager.

The Project Engineer will use in-house engineering and design desciplines to recommend technical decisions, provide administrative assistance, recommend resolutions, and provide analysis as needed. All engineering and design disciplines will report to the Project Engineer.

PROJECT QUALITY ASSURANCE ENGINEER (PQAE)

The PQAE is responsible for the implementation of the Quality Assurance Program for the System Interaction Study. He reports directly to the Chief Quality Assurance Engineer and has the authority and responsibility to identify quality related problems, to intiate or recommend solutions to control conformances until properly dispositioned and to verify implementation of approved dispositions. For a description of the quality assurance program, see chapter 7.

INTERACTION TEAM

The interaction team members are required to have considerable experience in their area of assignment. They have been involved with various aspects of systems interactions studies on other nuclear projects.

a. The Interaction Team comprises the following discipline Lead Engineers and their staffs:

(1) Mechanical Engineering
(2) Instrumentation and Control Engineering
(3) Electrical Engineering
(4) Civil/Structural Engineering
(5) Heating, Ventilating, and Air Conditioning Engineering
(6) Licensing
(7) Quality Assurance

b. The discipline Lead Engineers are selected from the staff of the engineering and design departments and are under the technical direction of the Discipline Chief Engineer.

Figure 4-1
POWER AUTHORITY OF THE STATE OF NEW YORK
INDIAN POINT 3 NUCLEAR POWER PLANT
SYSTEMS INTERACTION STUDY

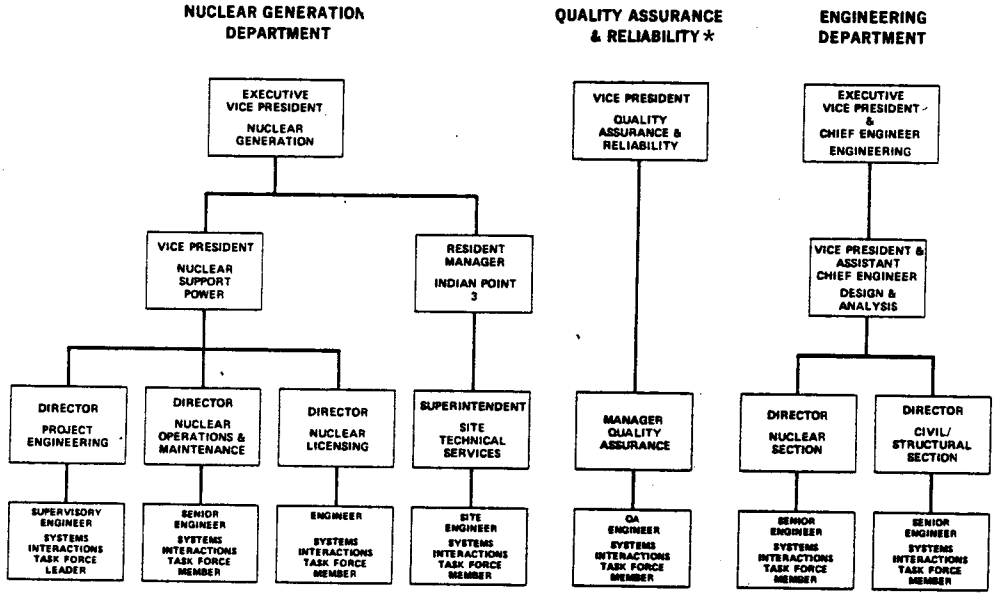

SYSTEMS INTERACTION TASK FORCE TEAM

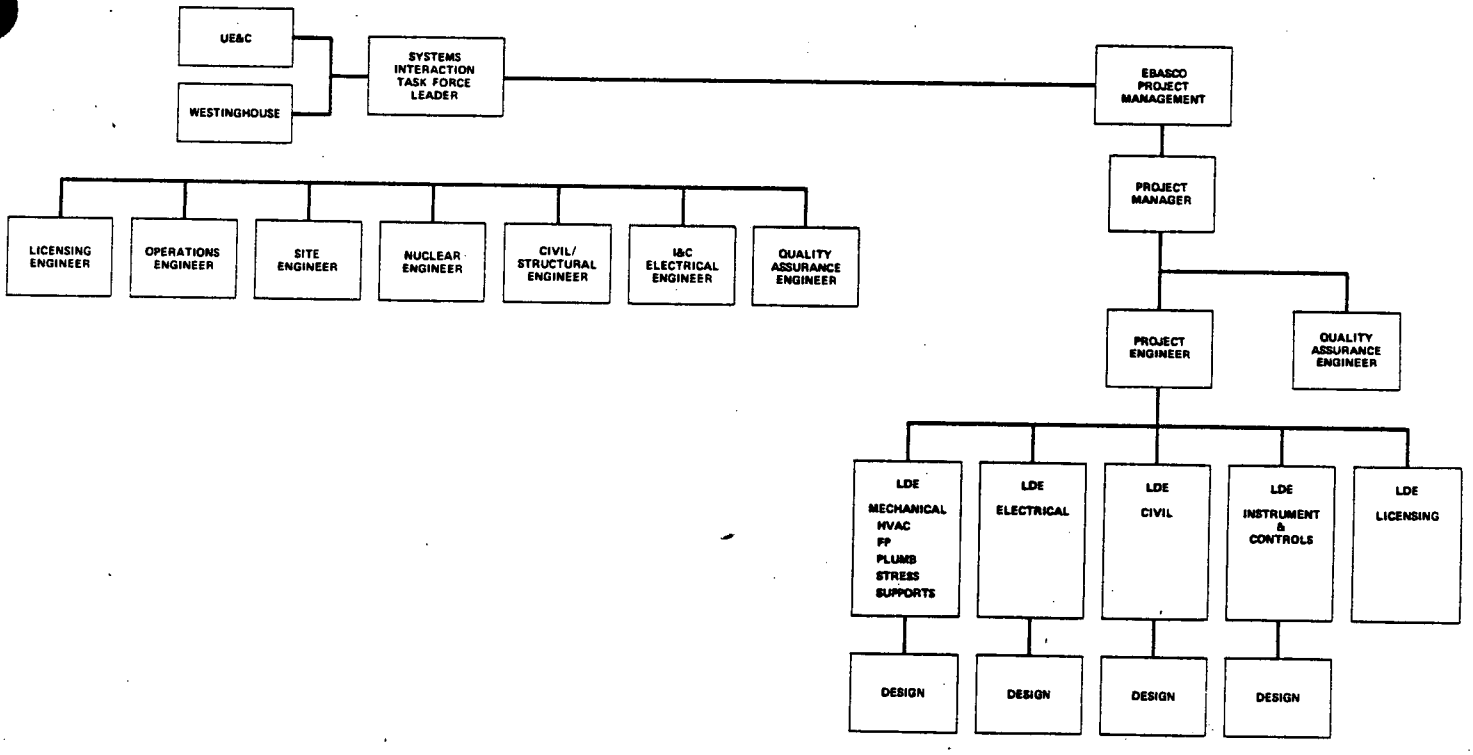

* Denotes an organizational modification which required a Technical Specification change. The proposed change to the Technical Specifications was submitted in the Authority's letter dated March 8, 1983, IPN-83-21.

INDIAN POINT 3 NUCLEAR POWER PLANT

SYSTEMS INTERACTION STUDY

CHAPTER 5

5.0 METHODOLOGY

5.1 PURPOSE

This section describes the methodology and documentation process to be used for performing the systems interaction study for the Indian Point 3 Nuclear Power Plant.

Through an evaluation of methodology techniques prescribed by state-of-the-art reviews, it was concluded that any one method can not perform an adequate review for determining adverse systems interactions. However, all of the methods evaluated included a process of "sifting-out" adverse systems interactions by 1) selecting specific systems for detailed evaluation, 2) the identification of dependencies or commonalities, and 3) evaluation of the systems interactions through the determination of their relative importance to safety. It is this three-step process which provided the foundation for performing a systems interaction study for the Indian Point No. 3 Nuclear Power Plant.

5.2 INITIAL ACTIVITIES

The initial task of this study was to determine if an adverse systems interaction could occur and if so, whether or not a significant impact of the degradation of the reactor core and the release of unacceptable levels of radioactivity to the site environs could result. Those conditions considered to be adverse and have a significant potential for leading to core damage are, failure to achieve or maintain reactor subcriticality, failure to remove decay heat, failure of the reactor coolant system pressure boundary and containment integrity. The Functional Tables describe the safety functions associated with reactor subcriticality, decay heat removal, reactor coolant pressure boundary and containment integrity and the corresponding systems and major components for the Indian Point 3 Nuclear Power Plant.

5.3 INTERCONNECTED SYSTEMS INTERACTIONS

5.3.1 IDENTIFICATION OF INTERCONNECTED SYSTEMS

Interconnected systems are defined as those mechanical and electrical complexes which are process coupled to one another physically via piping, instrumentation tubing or electrical wiring. Included in this definition is HVAC equipment, which although not physically connected, may be necessary to support the continuous safe operation of interconnected systems, e.g., an air handling unit which has been specifically designed to cool an essential safety related pump/motor set.

5.0 METHODOLOGY (Cont'd)

5.3 INTERCONNECTED SYSTEMS INTERACTIONS (Cont'd)

5.3.1 IDENTIFICATION OF INTERCONNECTED SYSTEMS (Cont'd)

The first steip in "sifting-out" or searching for adverse systems interactions, the selection of specific systems for evaluation, is accomplished by developing a functional table and logic diagram (See Logic Diagram Section) for each of the four safety goals. The logic diagrams are based upon the FSAR, system descriptions, instrumentation and control logic diagrams and electrical schematic, block and wiring diagrams. In addition important information about system interfaces is obtained at the site by inspecting physical facilities and by meeting with plant personnel familiar with the design, operation and maintenance of the system.

Having established those front line systems that must function in whole or in part to satisfy the four safety goals, it is then possible to identify all necessary subsystems. These subsystems are required to operate in whole or in part in order that the primary systems operate properly. The relationship between the primary systems or subsystems is defined on the auxiliary diagram. (See Auxiliary Diagram Section)

The functional tables, logic diagrams (FT-LD), and auxiliary diagrams (AD) are the primary documents developed for identifying the safety and support systems (including nonsafety systems) that are to be analyzed for interactions.

5.3.2 PLANT OPERATING MODE

The systems interaction study for interconnected systems is conducted for Condition I, II, III and IV events as described by the N-18 Committee of the American Nuclear Society (ANS/N-18).

5.3.3 ANALYSIS TECHNIQUES FOR INTERCONNECTED SYSTEMS

5.3.3.1 GENERAL

For interconnected mechanical or electrical complexes (process connected systems, dependency analyses will form the basis for the systems interaction analysis. The FT-LD's and AD's, described the combinations of systems which, if loss of redundancy is an unacceptable failure, would result in loss of any of the four basic goals, ie, reactor-subcriticality, decay heat removal, reactor coolant pressure boundary, or containment integrity and, by assumption, result in possible core damage. These documents are the vehicles for the identification and evaluation of systems interactions which could significantly compromise the safety of the Indian Point 3 Nuclear Power Plant.

In addition to the above, as a supplemental device for the evaluation of SI's identified, consideration will be given to the use of fault trees on individual systems already available from the Z/IP-3 PSS analysis. It is expected that most SI's identified will not require the use of fault trees for evaluation; engineering judgement, based on an appropriately reflecting existing deterministic criteria, will be used in most cases.

5.0 METHODOLOGY (Cont'd)

5.3 INTERCONNECTED SYSTEMS INTERACTIONS (Cont'd)

5.3.3.2 FUNCTIONAL TABLE & LOGIC DIAGRAMS

Having defined the safety goals and the specific plant safety systems the next step is to identify the required components of the Safety System that must function in order to accomplish the safety goal. The sensed variables are identified that cause or require the system repsonse. In cases where the system does not automatically respond, the operator action required to initiate the safety system (e.g., starting a pump locally or from the control room) is identified. As the safety systems and their action are identified, they are arranged to indicate alternative success paths, leading to the required safety function. The arrangement of success paths becomes the Logic Diagram (LD) for the event.

The logic diagrams are arranged at the system level rather than at the component level. The reason for this decision is that the design of most safety related systems includes the concept of "single failure". Therefore if a potentially unacceptable interaction exists within a given safety related system, the subsequent application of the single failure criteria will render that system inoperable. Therefore no credit can be taken for redundancy of components within any given system, the redunancy (if it exists), must be at the system level.

5.3.3.2.1 AUXILIARY DIAGRAMS

After completion of the FT & LD for each of the four goals, each safety system identified is analyzed to determine the specific support requirements necessary to produce its safety action. Examples of these support requirements are electric power, component cooling, or instrument air supply. The analyst refers to the System Design Descriptions, flow diagrams, one line diagrams, FSAR, etc to determine every sequence in which a safety system is required, thereby ensuring all support requirements are identified. These systems are the Auxiliary Safety System. An Auxiliary Diagram is then prepared on which the prime safety system and its auxliary safety systems are displayed.

In developing the Auxiliary Diagrams the analyst determines whether the support system design is functionally redundant by developing design information about the plant sufficient to positively identify the auxiliaries essential for the required response of the safety system.

To complete the Auxiliary Diagram the analyst must review the Logic Diagrams for the four postulated goals to identify all safety sequences in which the subject auxiliary safety system appears.

5.0 METHODOLOGY (Con'td)

5.3 INTERCONNECTED SYSTEMS INTERACTIONS (Cont'd)

5.3.3.2.2 Interconnected Matrix (IM)

After completion of the Functional Table, Logic Diagrams and Auxiliary Diagrams, a safety system component identification process begins. The responsible discipline analyst conducts a detailed review of the system. Utilizing the system flow diagrams and FSAR etc, an identification of each component of the system is made. In addition, the analyst defines and assesses the relationship of each component to all components to which it is physically connected or has a functional dependence. This relationship is defined as a process coupling.

5.3.3.2.3 Non-Connected Matrix (NCM)

Each safety related system component identified in the Interconnected Matrix, is listed on a corresponding non-connected matrix. This document is utilized to record the results of the plant walkdowns, which will identify spatial interactions. A separate spatial evaluation will be completed for each spatial interaction identified. The acceptability of the interactions will be based upon acceptance criterion listed in section 6.2 and will also utilize the engineering judgement of the highly skilled personnel performing the reviews. For additional discussion see section 5.4.

5.3.3.2.4 Commonality Diagram

After completion of the Functional Table & Logic Diagram for each postulated event and the Auxiliary Diagrams, the Interconnected & Non-connected Matrix's Commonality Diagram (CD) for each Safety System is developed. This diagram identifies the number of Auxiliary Safety Systems which are affected by a single category of interaction. The CD is developed mainly as an information diagram, rather than a primary design review diagram. The CD allows evaluation of the overall plant susceptibility to systems interactions relative to each Auxiliary Safety System.

5.3.3.3 Criteria for Selecting Random Equipment/Component Failure

5.3.3.3.1 The Scope of Failure To be Excluded are:

- Operator Induced Failures, and
- Equipment Unavailability Due To Testing Or Maintenance, and
- Sabotage
- Act of war

The subject of operator induced failures in system interaction studies have been excluded from this criteria. The subject of the operator's influence on plant safety is not, however, being neglected since much of the available industry resources have been directed at improving operator training, developing advanced simulators, improving the human-machine interface through additional instrumentation and control room reevaluation and the development of improved operational procedures.

5.0 METHODOLOGY (Cont'd)

5.3 INTERCONNECTED SYSTEMS INTERACTIONS (Cont'd)

5.3.3.3 Criteria for Selecting Random Equipment/Component Failure (Cont'd)

5.3.3.3.1 The Scope of Failures To Be Excluded are: (Cont'd)

Equipment unavailability due to testing or maintenance is also excluded from the scope of this study since generally technical specifications limit the time safety related equipment may be removed from service while the plant is in the operating mode.

5.3.3.3.2 The scope of Failures/Malfunctions does include the consideration of:

Failures caused by adverse interactions of interconnected systems and components that result as a direct consequence of off-normal events or actions for which the effected equipment has been prescribed to operate. The off-normal events or actions which will be considered in this study are:

- Loss of Power (both motive and control power of the electrical, hydraulic and pneumatic type)
- Seismic Induced Failures
- Cooling (including HVAC equipment)

5.4 NONCONNECTED SYSTEMS INTERACTIONS

5.4.1 Identification of Nonconnected Systems

Nonconnected systems are defined as all safety and nonsafety mechanical, electrical, instrumentation and civil systems which are associated with the physical arrangement or spatial coupling of each other.

The identification of nonconnected spatially coupled systems is based upon the review of plant general arrangements and piping drawings. The plant general arrangement and its association with spatially coupled systems is determined by performing a systematic plant "walkdown" of the areas comprising the system function described in Table 5-1.

5.4.2 Plant Operating Mode

The systems interactions study for nonconnected or spatially coupled systems is conducted for those Design Basis Events described in Section 5.4.3 for the corresponding plant operating mode.

5.0 METHODOLOGY (Cont'd)

5.4 NONCONNECTED SYSTEMS INTERACTIONS (Cont'd)

5.4.3 Failure Criterion

When considering systems interactions of nonconnected systems for the design basis events described herein, the structures, systems and components which are required to satisfy each of the four safety goals shall not be prevented from carrying out their required safety functions because of physical, mechanical, fluid or electrical interactions caused by the event induced failure of equipment not qualified/designed to withstand event consequences. The structures, systems and components important to safety shall not lose their redundance required to compensate for single failures, because of event induced interactions.

In this report "an event" will include the following:

1) Earthquake: up to and including the safe shutdown earthquake.

2) Pipe Failure: pipe whip, jet impingement, jet reaction, severe environment - (temperature, pressure, humidity)

3) Physical Impact: from missiles generated internally and externally.

4) Flooding: from internal failures (pipe and tank failure) or external effects due to rain, snow, etc

5) Tornado Depressurization/Overpressurization

6) Fire

7) Loss of offsite power

8) LOCA or Main Steam Line Break

5.4.4 Analysis Techniques

For nonconnected systems interactions the first step is to classify nonconnected spatially coupled systems, components and structures as either a "source" or a "target".

Target Definition:

Equipment which requires protection from potential event induced interactions are designated as targets. Structures, systems and components of Auxiliary Safety Systems defined during the interconnected phase of the study are considered targets.

5.0 METHODOLOGY (Cont'd)

5.4 NONCONNECTED SYSTEMS INTERACTIONS (Cont'd)

5.4.4 Analysis Techniques

5.4.4.1 Seismically Induced Systems Interactions

Source Definition:

For seismically induced events, the sources of detrimental interactions are any non seismically supported or qualified structures, systems or components which, by their proximity and/or connection to targets, may interact through physical, mechanical, electrical or enviromental means to compromise the integrity or operability of the target.

5.4.4.1.1 Interaction Walkdown

A plant walkdown will be performed by an interdisciplinary team of experienced engineers. During the inspection, all possible interactions will be postulated for source equipment that might affect the target system to be protected. Consideration will be given to local equipment arrangement and geometry, and the possible results of these failures. The interaction team, after identifying the potential interactions between source and target equipment, will utilize the established criteria in Chapter 6 to determine if these interactions are credible. Once the field system evaluation has been completed the following information will be documented.

a. Location of the potential interaction.

b.. Components and systems involved in the potential interaction are identified on a nonconnected matrix form and documented on the nonconnected evaluation sheet.

c. The specific criteria used for the evaluation (which includes the type of interaction) is documented on the evaluation sheet.

d. A photographic record of each identified interaction is made. The photograph number forms a part of a unique number which identifies the Auxiliary Safety System involved and the specific target and source under consideration. This interaction number is included in the evaluation sheet. A small arrow indicates the general location of the target(s) and/or sources. A key plan (background) is made indicating the general location of the interaction.

e. Recommendation of the interaction team. This may take the form of one of the following:

5.0 METHODOLOGY (Cont'd)

5.4 NONCONNECTED SYSTEMS INTERACTIONS (Cont'd)

5.4.4.1.1 Interaction Walkdown (Cont'd)

(1) Finding whether or not an interaction occurs

(2) Determine that, if interaction does occur, no safety function is impaired

(3) Recommendation for further evaluation. (Potentially Unacceptable)

The Interaction Team will consider failures to non-essential systems (e.g., loss of electricity and pressure) which may have an effect on the operation of target equipment.

During the plant walkdown, each component on the nonconnected matrix will be inspected by the Interaction Team. Each unit of source equipment in the vicinity of the item will be considered to fail by any or all of the specific mechanisms listed in the criteria (Chapter 6). These mechanisms will be considered to act singly and in combination. When failure has been postulated, it will be possible during the inspection or, afterwards by offsite analyses, to determine interactions with the target equipment. All such interactions will be listed and evaluated using the established failure criteria as described in Section 5.4.3.

The plant walkdown by the interdisciplinary team will consider the effects of intercompartmental interactions. The potential intercompartmental interactions will be identified and relevent data such as location will be documented. The walkdown team will physically inspect all adjacent compartments that may have interaction effects. Items such as fire, flooding, electrical, pressure, and dynamic effects will be considered. Further interaction effects that may be determined from evaluation of the data base information may require a second intercompartmental walkdown.

5.4.4.1.2 Interaction Criteria

An interaction is identified whenever the event induced behavior of a source could lead to detrimental effects on a nearby target. Pairings of targets and sources are based on physical proximity or direct system connection. Then an assessment is made of the possible event induced behavior of the sources. An interaction is not identified by the field walkdown team if it can be established by inspection that no credible failure mode can be induced in the sources by events of credible severity, which would violate the acceptance criterion.

5.0 METHODOLOGY (Cont'd)

5.4 NONCONNECTED SYSTEMS INTERACTIONS (Cont'd)

5.4.4.1.2 Interaction Criteria (Cont'd)

In general, event induced interactions identified will be in one or more of the following categories:

a. Contact between a source and a target that would compromise operability of the target.

b. Fluid leakage from one or more sources that would degrade the environment of the target component and thereby prevent it from proper functioning.

c. Contact between a missile generated by a non-safety related source and initial target that would compromise the pressure boundary of a second target component.

d. Contact between a missile generated by non-safety related source and an initial target that would compromise operability of a second target component.

e. Failure of non-safety related electrical equipment that would compromise the operability or integrity of target equipment.

f. Secondary effects or cascading influences (mechanical, electrical or fluid) caused by any of the above interactions are considered to the extent that they result in the failure or misoperation of a specific Auxiliary Safety System target(s).

5.4.4.2 Pipe Failure Induced Systems Interactions

The methodology employed for determining the effect of pipe failure induced systems interactions is consistent with the guidelines provided in NRC Standard Review Plans 3.6.1 and 3.6.2 and Regulatory Guide 1.46.

5.4.4.3 Missile Induced Systems Interactions

The methodology employed for determining the effects of internally and externally generated missile induced systems interactions is consistent with the guidelines provided by NRC Standard Review Plans 3.5.1, 3.5.2 and 3.5.3.

5.4.4.4 Flooding Induced Systems Interactions

The methodology employed for determining the effects of flooding induced systems interactions is consistent with the guidelines provided by NRC Standard Review Plans 3.4.1 and 3.4.2.

5.0 METHODOLOGY (Cont'd)

5.4 NONCONNECTED SYSTEMS INTERACTION (Cont'd)

5.4.4.5 Fire Induced Systems Interactions

The methodology employed for determining the effects of fire induced systems interactions is consistent with the guidelines provided in NRC Standard Review Plan 9.5.1 and companion Branch Technical Position APCSB 9.5-1.

5.4.4.6 Severe Environment Induced Systems Interactions

The methodology employed for determining the effects of severe environment induced systems interactions is consistent with the guidelines provided by NRC Standard Review Plans 3.3, 3.4, 3.5, 3.6, and 3.11.

INDIAN POINT 3 NUCLEAR POWER PLANT

SYSTEM INTERACTION STUDY

CHAPTER 6

6.0 EVALUATION CRITERIA

As stated in Section 3.0 a systems interaction analysis involves the systematic search for hidden or inadequately analyzed interconnections or couplings, and the evaluation of the effects of nonsafety system failure (or malfunction) propagated into the safety system by such interconnections/couplings. Section 5.0 provided the methodology for searching for adverse systems interactions which was characterized as being more stringent thatn the current criteria applied in the licensing process. This section prescribes the evaluation criteria or acceptance criteria to be used for analyzing identified potentially unacceptable systems interactions consistent with Section 5.0. It is important to note that unlike the search criteria presented in Section 5.0 the evaluation/acceptance criteria to be employed for evaluating identified system interactions are consistent with the licensing basis for this plant. That is to say the single failure criterion as it was applied to the licensing of IP-3, governs.

In addition, the results of the Z/IP-3 PSS analysis will be reviewed for its applicability to evaluate certain system interactions using probabilistic techniques.

6.1 INTERCONNECTED SYSTEMS

The evaluation of interconnected system interactions and their effects on plant safety will be based upon satisfying the system operability requirements as reflected in the FT & LD and in the interconnected evaluation sheet. Postulated system interactions induced by random failures of safety related components are considered acceptable since it should not compromise the functional capability of the system to perform its intended safety function.

6.2 NONCONNECTED SYSTEMS

6.2.1 Evaluation of Sources

The evaluation of event induced systems interactions and their effects on plant safety rests heavily on experienced engineering judgement. Reliance is placed on assigned engineering and design personnel in various relevant disciplines applying their knowledge and experience in evaluating the problems.

Potential sources are evaluated as part of the program to determine if events can credibly lead to detrimental interaction with targets. They are categorized in one of the following:

a. Event will not lead to interaction because of defensible qualificaiton of the sources by analysis, test, or experience with the same or similar items.

6.0 EVALUATION CRITERIA (Cont'd)

6.2 NONCONNECTED SYSTEMS (Cont'd)

6.2.1 Evaluation of Sources (Cont'd)

b. Events may lead to damage or failure of the sources, but the credible failure modes are not a threat to the safety function of the target.

c. Events may lead to a credible failure mode of the source which has the potential to cause adverse interaction.

These generic categories have been expanded to a more detailed list which is contained in the system nonconnected Auxiliary Safety System evaluation form.

6.2.1.1 The following criteria provide minimum guidance for evaluation of sources for seismically induced events:

a) Structural Source Evaluation

All structural sources are evaluated by the single failure criterion:

Any non-safety related structural element determined to be a potential source will be assumed to fail, unless seismic qualification by analysis, test or comparison to similar previously qualified elements has been performed to ensure integrity.

b) Mechanical Source Evaluation

The following is a set of failure modes for mechanical equipment which must be considered when evaluating potential sources in these categories.

In addition to the specific failures below, complete loss of power for all source equipment and control power has been postulated. Relative motion between the source and target are considered during the walkdown examination.

- Overturning of tank, pumps, filters or other unsupported equipment where the center of gravity location as measured from the base is longer than one-half the base width in all directions. Each direction will be evaluated independently. A horizontal acceleration equivalent to at least that value associated with the plant SSE, would be required to overturn an unsupported component whose height is less than ½ base width from the base. Overturning is not considered where the distance from the base to the center of gravity is small. Further conservatism is obtained because mechanical equipment is held down by bolting, brackets, etc.

6.0 EVALUATION CRITERIA (Cont'd)

6.2 NONCONNECTED SYSTEMS (Cont'd)

6.2.1.1 (Cont'd)

b) Mechanical Source Evaluation (Cont'd)

However, if any component structure or system experiences a horizontal acceleration of greater than the SSE, it will be evaluated on a case by case basis.

- All non-seismically qualified valves, pumps, tanks and vessels are assumed to fail in the "worst credible mode" possible. (E.g., partial failure of valves and operation of pumps below design flow rate have to be considered).

  The "worst credible mode" will be based on sound engineering judgement.

c) Electrical Source Evaluation

Several categories of failure type must be considered with regard to seismic effects on electrical sources (equipment and cabling). They are discussed below:

c.1 Electrical Equipment

c.1.1 Overturning of cabinets, transformers, switchgear or other unsupported equipment where the center of gravity location as measured from the base is longer than one-half the base width in all directions. Each direction will be evaluated independently.

The same considerations discussed in regard to overturning of mechanical equipment apply to electrical equipment, i.e., overturning is assumed only for cases where the distance to the center of gravity is significant compared to the base width.

c.1.2 All nonseismically qualified electrical equipment (except cable trays) will be assumed to fail in the worst credible mode possible. The "worst mode failure" will be based on sound engineering judgement.

c.1.3 All nonseismically supported electrical equipment (except raceways) will be assumed to be a source of the "worst possible" physical and electrical interaction.

6.0 EVALUATION CRITERIA (Cont'd)

6.2 NONCONNECTED SYSTEMS (Cont'd)

6.2.1.1 (Cont'd)

c) Electrical Source Evaluation (Cont'd)

c.2 Cable Trays

c.2.1 Seismically Supported Cable Trays

Cable trays that are determined to be seismically supported/restrained are assumed to remain physically intact in the event of an SSE (i.e., they do not become a source) and also that they will develop no electrical faults as built.

c.2.2 Non-Seismically Supported Cable Trays

A non-seismic cable tray in the vicinity of essential safety related equipment is to be a potential source and assumed to collapse. Also cables contained within the tray are assumed to develop electrical faults. The "vicinity" is defined by the criteria assumed and illustrated in Figures 6-1 & 6-2.

c.3 Conduits

Non-seismically supported/restrained conduits are assumed to be the source of mechanical and electrical interactions in an SSE.

d) HVAC Source Evaluation

d.1 Non-seismically supported ductwork that run directly over essential safety related targets will be considered a source of potential interaction. The interaction boundary envelope is illustrated in Figure 6-3.

d.2 While considering systems interaction of HVAC systems, the effects of ductwork crimping, adverse operation (or non-operation) of non-safety related fans that might spread combustible or toxic fumes through the ductwork has to be considered.

d.3 Failure of in-line HVAC equipment will follow the source evaluation criteria for mechanical equipment. Support failure resulting in tipping, falling, sliding or overturning may occur. Overturning will be assumed possible when the distance as measured from the base to the center of gravity is more than one-half the width of the base. Each direction will be evaluated independently.

6.0 EVALUATION CRITERIA (Cont'd)

6.2 NONCONNECTED SYSTEMS (Cont'd)

6.2.1.1 (Cont'd)

e) Piping System Source Evaluation

High energy pipe rupture, jet impingement, flooding and internal missile analyses are not included in this seismically induced interaction assessment except in the cases where these effects are seismically induced.

All piping and associated components identified as an essential safety related component fall under the category of targets. Also they are assumed to be seismically supported or restrained and hence will not become seismically induced sources.

Non-seismically designed piping will be considered as a source in the following context:

Physical Impact: All non-seismically designed/supported piping running in the vicinity of targets could fall or physically impact the target within the pipe's volume of influence. The volume of influence is defined as five (5) pipe diameters or five (5) feet whichever is greater, laterally from the pipe center line. The pipe is assumed to fail anywhere along the piping run, during or post SSE. This criteria is based upon reasonable engineering judgement and is illustrated in Figure 6-4.

Flooding: A non-seismic piping run in the vicinity of target equipment will be assumed to have a circumferential or longitudial rupture during or post SSE that could flood the room (attention must be paid to the instrumentation cabinets, motors, etc. in the room), or flood any cable tray runs immediately above or below the piping run.

Environmental: Piping failures or a resulting chain interaction could cause unacceptable environmental conditions enveloping a target equipment, (e.g., auxiliary steam line failures could result in a steam environment with elevated temperatures and high humidity). Specific targets could either cease functioning or malfunction in this environment.

6.0 EVALUATION CRITERIA (Cont'd)

6.2 NONCONNECTED SYSTEMS

6.2.1.1 (Cont'd)

f) Instrumentation and Control, Source Evaluation

All instrumentation that is not seismically qualified will be assumed to malfunction in the "worst credible mode". Instrumentation that is not seismically mounted will be assumed to fail strcturally. The "worst credible mode" will be based on engineering judgement.

6.2.1.2 The following criteria provide minimum guidance for evaluation of sources for pipe failure induced events.

The criteria provided by the NRC Standard Review Plans 3.6.1 and 3.6.2 with companion Branch Technical Positions BTP APCSB 3-1 and MEB 3-1 were used to evaluate systems interactions associated with pipe failure induced events Table 6-1 summarizes the acceptance criteria for external and internal challenging events relative to the system, component or structure being evaluated.

6.2.1.3 The following criteria provide minimum guidance for evaluation of sources for missile (internally and externally) generated induced events.

The criteria provided by the NRC Standard Review Plans 3.5.1, 3.5.2 and 3.5.3 were used to evaluate systems interactions associated with the effects of internally and externally generated missile systems interactions. Table 6-1 summarizes the acceptance criteria for challenging events relative to the system component or structure being evaluated.

6.2.1.4 The following criteria provide minimum guidance for evaluation of sources associated with flooding induced events.

The criteria provided by the NRC Standard Review Plans 3.4.1 and 3.4.2 were used to evaluate adverse systems interactions associated with the effects of flooding. Table 6-1 summarizes the acceptance criteria for challenging events relative to the system, component or structure being evaluated.

6.2.1.5 The following criteria provided minimum guidance for evaluation of sources resulting from the effects of fire induced events.

The criteria provided by the NRC Standard Review Plan 9.5.1 with companion Branch Technical Position BTP APCSB 9.5-1 were used to evaluate adverse systems interactions associated with the effects of fire. Table 6-1 summarizes the acceptance criteria for challenging events relative to the system component or structure being evaluated.

6.0 EVALUATION CRITERIA (Cont'd)

6.2 NONCONNECTED SYSTEMS

6.2.1.6 The following criteria provide minimum guidance for evaluation of sources resulting from the effects of severe environment.

The criteria provided by the NRC Standard Review Plans 3.3, 3.4, 3.5, 3.6 and 3.11 were used to evaluate systems interactions resulting from severe environmental conditions. In addition the guidance provided by IE Bulletin 79-OIB was used to the degree practicable for this evaluation. Table 6-1 summarizes the acceptance criteria for challenging events relative to the system, components or structure being evaluated.

6.2.2 Modification Criteria

Modifications may be required to resolve identified event induced adverse systems interactions. These modifications may be any of the following:

a. Modification of the source to eliminate the adverse behavior by bracing, supporting, or reinforcing the source component.

b. Shielding or relocation of the target to preclude the physical interaction.

c. Modification of the target to permit retention of the required safety function in spite of the interaction.

d. Alteration of system design to provide alternate means of accomplishing the safety function.

The criteria for structural or mechanical modifications are the same as documented for safety related structures and equipment.

For relocation or modification of non-safety related equipment, the criterion for acceptability is that the modified configuration, when re-evaluated for interactions using the evaluation criteria previously stated, is found to have resolved the original interaction and not created any new interactions.

6.2.2.1 Interaction Effects Evaluation Criteria

Once an interaction is identified as sufficiently credible to require more evaluation than can be done from inspection, it must be resolved in an acceptable manner and the resolution documented. Interactions considered are direct physical interactions such as target impact from a falling or moving source. Typical interactions are listed below.

Mechanical:

- impact from falling bodies
- pipe whip
- missiles

6.0 EVALUATION CRITERIA (Cont'd)

6.2 NONCONNECTED SYSTEMS (Cont'd)

6.2.2.1 Interaction Effects Evaluation Criteria (Cont'd)

Electrical:

- unwanted open circuit (loss of control power)
- unwanted closed circuit
- unwanted energization

Pneumatic:

- loss of pressure (loss of control)
- unwanted pressurization
- jet impingement
- hostile gas

Hydraulic:

- loss of pressure
  - (a) loss of control
  - (b) loss of lubrication
- unwanted pressurization
- jet impingement
- flooding
- hostile fluids

Environmental:

- elevated temperatures
- humidity
- radiation

Interactions are evaluated for their impact on the required safety functions and redundancy of identified targets. The results of the evaluation will then determine the method of resolution. In order of preference, the following are categories of acceptable methods of resolution of identified interactions.

a. Target Operability Evaluation:

The first approach to resolution is to show that the target's safety function is not impaired. This may be accomplished by studying the means by which impairment occurs and the possible extent of the

6.0 EVALUATION CRITERIA (Cont'd)

6.2 NONCONNECTED SYSTEMS (Cont'd)

6.2.2.1 Interaction Effects Evaluation Criteria (Cont'd)

a. Target Operability Evaluation (Cont'd)

impairment. For example, a pneumatically operated valve may be required to close during shutdown, but falling equipment could sever the air line so air supply to the operator is lost. If the valve is a "fail open" type, then shutdown capability is compromised, but if the valve is a "failed closed" type, then shutdown capability is not compromised even through the air supply is lost. In this example it is also necessary to consider consequences of crimping the air line, as well as the effect of a lost air line.

The example is typical of the reasoning process that is necessary in the evaluation of each interaction. A substantial degree of engineering judgement is, of necessity, expected to be used. Decisions based on judgement, along with the rationale, are documented.

b. Source Behavior Evaluation:

The second approach to resolution is to perform a more careful evaluation of the source behavior resulting from an event. If tests, analysis, or applicable experience can be developed to demonstrate that the item in question is qualified to withstand the postulated event, the interaction can be declared resolved on the basis that it will not credibly occur. Identification and resolution of indirect or chain-reaction source events shall use individual source failure criteria for each component source.

c. Modification:

If resolution is not possible by analysis or by test, the Interaction Team will recommend that physical modifications be made to prevent detrimental interaction. The range of possible modifications includes guard structures, protective covers, and restraining structures. The criterion is to prevent impairment of function.

d. Change of Procedures:

The last method of resolution is by reordering the operating procedures or defining alternate means of providing the required safety functions. The Interaction Team will not specify procedural changes to resolve an adverse systems interaction, other than to present generic options.

6.0 EVALUATION CRITERIA (Cont'd)

6.2 NONCONNECTED SYSTEMS (Cont'd)

6.2.2.1 Interaction Effects Evaluation Criteria (Cont'd)

The evaluation and resolution methods are discussed below in more detail.

Evaluation of Direct Interaction Effects

Where evaluation is directed to showing that the safety function of a target is not impaired by an identified direct interaction, the following guidance has been established. For cases not covered, criteria are developed and documented to privide an analogous level of rigor to the guidance herein provided.

a. Dynamic effects of breaks in piping are evaluated using the criteria in Section 6.2.1.2. For example one criterion to be used is that no damage will result if the target pipe size is at least equal to the size of the source pipe and the wall thickness of the target pipe is at least equal to that of the source pipe.

b. Direct impact of missiles or falling objects on structures and components are evaluated when necessary using the criteria of Section 6.2.1.3. Care must be taken to consider such appurtenances as instruments, power connections, cooling and lubrication connections.

c. Direct impact of missles or falling objects on HVAC ducts have to be evaluated on a case by case basis.

d. Flooding effects of broken or leaking pipes are evaluated using the criteria of Section 6.2.1.4.

e. The effects of fire are evaluated using the criteria of Section 6.2.1.5.

f. Environmental effects of broken or leaking piping, tanks, etc. are evaluated by comparison of the estimated environment with the target's qualification profile. Helpful criteria and data are contained in Section 6.2.1.6.

Evaluation of Secondary Effects or Cascading Influences

Two types of secondary effects on cascading influences are considered; chain-reaction failures and degraded operation.

6.0 EVALUATION CRITERIA (Cont'd)

6.2 NONCONNECTED SYSTEMS (Cont'd)

6.2.2.1 Interaction Effects Evaluation Criteria (Cont'd)

Evaluation of Secondary Effects or Cascading Influences

For the chain-reaction events, the criteria for evaluation are the same as for the direct interactions and are successively applied to each member of the chain. It must be remembered that each step in chain scenarios has an associated probability less than one and that judgement must be applied to consider only credible scenarios.

In order for the plant to safely shut down, it is necessary for the required safe shutdown valves and drive elements to operate in the required manner, or fail in the required position. For this to occur the control systems must remain intact after the interaction event, or else be damaged only in such a way to fail in the design failure mode. For example, if an air operated valve is required to fail in a certain mode, the design is such it will go to that failure mode on loss of air. If, however, the air line between the control device and the valve were to be impacted during a seismic event, the line might be pinched. This could prevent the venting of air and thereby prevent the valve from failing in its proper mode.

In electrically operated devices, a non-qualified component could impact the signal cable and cause damage which would adversely affect proper operation.

Walkdown will identify process tubing, instrumentation, electrical cables and cable trays requiring protection from unacceptable interactions.

When questionable secondary interactions are identified which are not readily evaluated to be acceptable, the resolution then becomes one of modification such as redesign or replacement of the source equipment or the rerouting or upgrading of control and electrical wiring and/or process and air tubing.

INDIAN POINT 3 NUCLEAR POWER PLANT
SYSTEMS INTERACTION STUDY

NON-CONNECTED SYSTEMS INTERACTION-EVALUATION CRITERIA
TABLE 6-1

Common Cause Event	Follow-On Event	Acceptance Criteria: Relative Location of Challenging Event Relative To System Component Being Evaluated — External	Acceptance Criteria: Relative Location of Challenging Event Relative To System Component Being Evaluated — Internal	Corresponding Standard Review Plan/Regulatory Guide Criteria
A. Earthquake	a. structural failure b. pipe failure c. flooding d. severe environment e. missile	See Chapter 6.0	See Chapter 6.0	10CFR part 50, Appendix A GDC 2 Regulatory Guide 1.29 "Seismic Design Classification" Standard Renew Plan 3.2.1, Seismic Classification
B. Pipe Failure	a. missile b. flooding c. severe environment d. structural	. structure, system, component capable of withstanding the resulting effects of pipe whip, jet impingement, flooding and severe environment	. Whip restraints . Barriers/Shields . Separation	Standard Review Plan 3.6.1/APCSB 3-1 Standard Review Plan 3.6.2/MEB 3-1 Regulatory Guide 1.46
C. Missile	a. pipe failure b. flooding c. fire d. severe environment e. structural failure	. structure, system, component capable of withstanding the resulting efects of pipe failure, flooding, fire, severe environment, impact	. Barriers/Shields . Separation	Standard Review Plan 3.51 Standard Review Plan 3.52 Standard Review Plan 3.53
D. Flooding	a. severe environment b. structural failure	. structure/compartment designed to adequately prevent flooding entry	. Drainage system capable of handling maximum expected flood rate . Components capable of functioning in submerged (flooded) environment	Standard Review Plan 3.4.1 Standard Review Plan 3.4.2
E. Fire	a. severe environment	. Fire resistant construction . No communicating paths . Limited combustibles	. Fire Detection and Suppression Systems . Limited Combustibles	Standard Review Plant 9.5.1/ BTB APCSB 9.5-1
F. Severe	a. flooding b. fire c. temperature d. humidity e. radiation f. wind g. missile h. depressurization	. Structure/compartment capable of withstanding the resulting environmental condition . No communicating paths	. Equipment/component qualified to the resulting environmental condition . Compartment environment controlled	Standard Review Plan 3.3 Standard Review Plan 3.4 Standard Review Plan 3.5 Standard Review Plan 3.6 Standard Review Plan 3.11

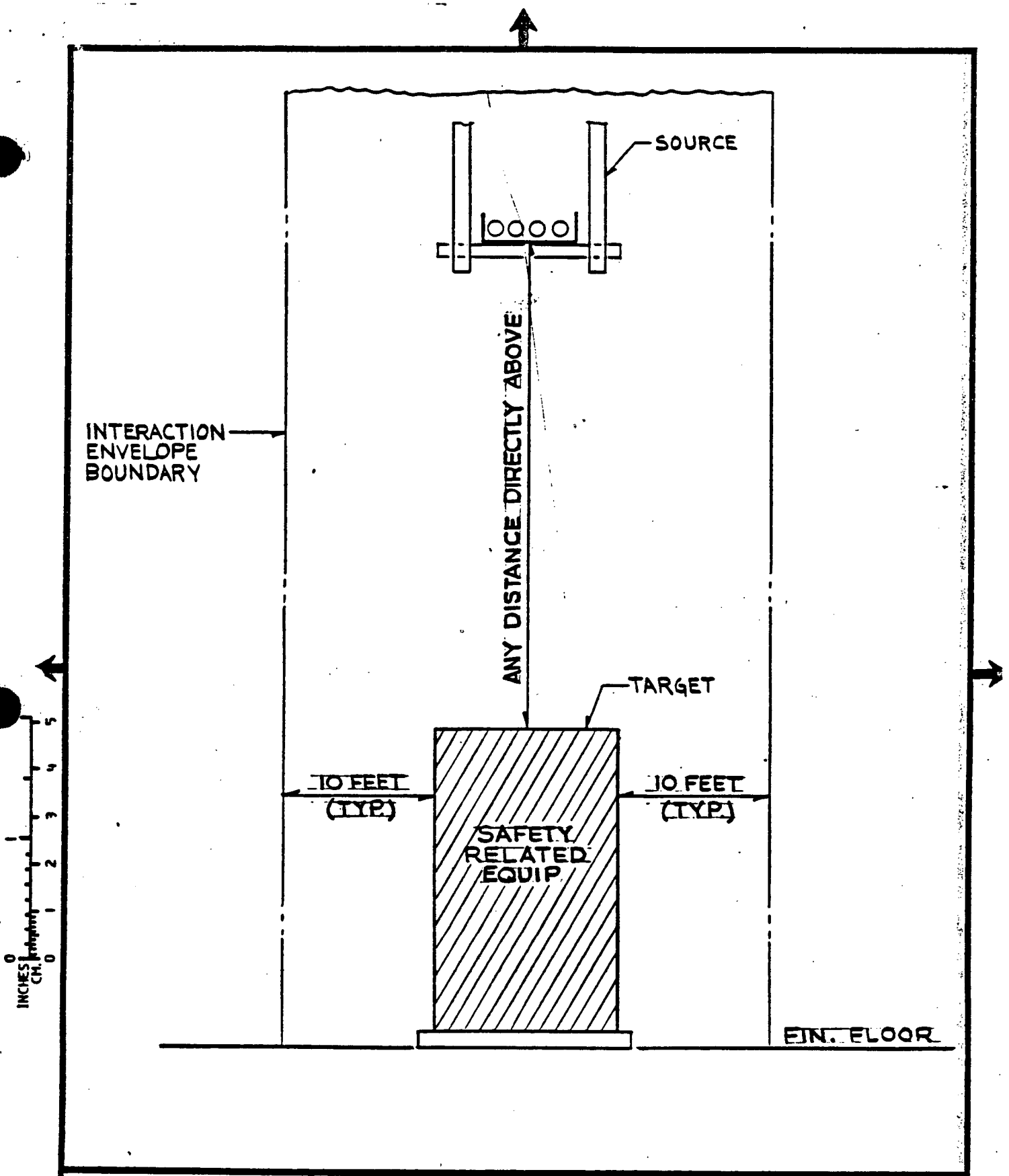

EBASCO SERVICES INCORPORATED	POWER AUTHORITY OF THE STATE OF NEW YORK INDIAN POINT No. 3 NUCLEAR POWER PLANT SYSTEMS INTERACTION STUDY INTERACTION CRITERIA ELECTRICAL CABLE TRAYS	FIGURE 6-1
DIV. MNE DR. JM DATE 3-20-81 CH. [illegible] SCALE NONE		

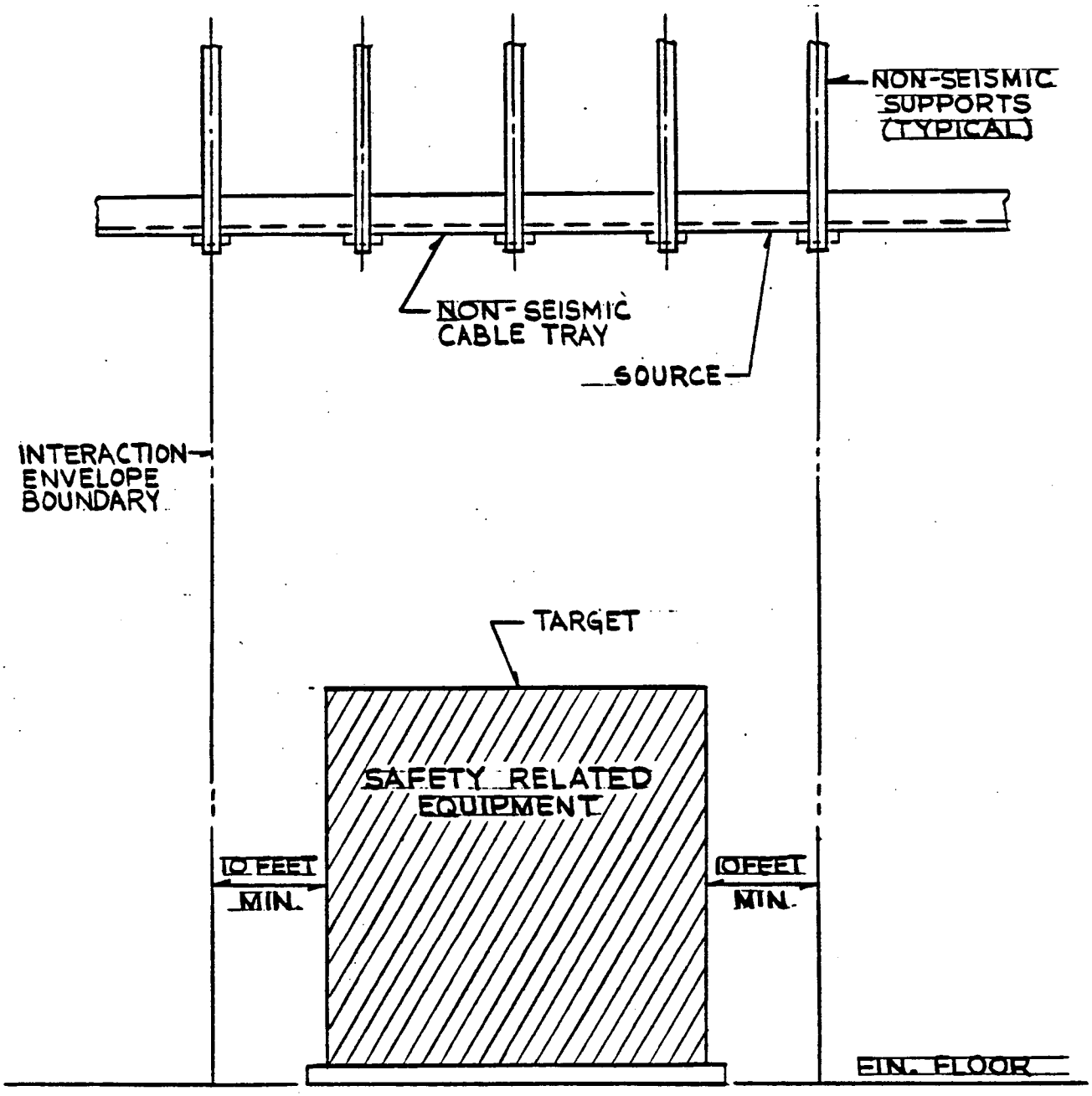

EBASCO SERVICES INCORPORATED	POWER AUTHORITY OF THE STATE OF NEW YORK INDIAN POINT No. 3 NUCLEAR POWER PLANT SYSTEMS INTERACTION STUDY INTERACTION CRITERIA ELECTRICAL CABLE TRAYS	FIGURE 6-2
DIV. MNE DR. JM DATE 3-20-81 CH. [illegible] SCALE NONE		

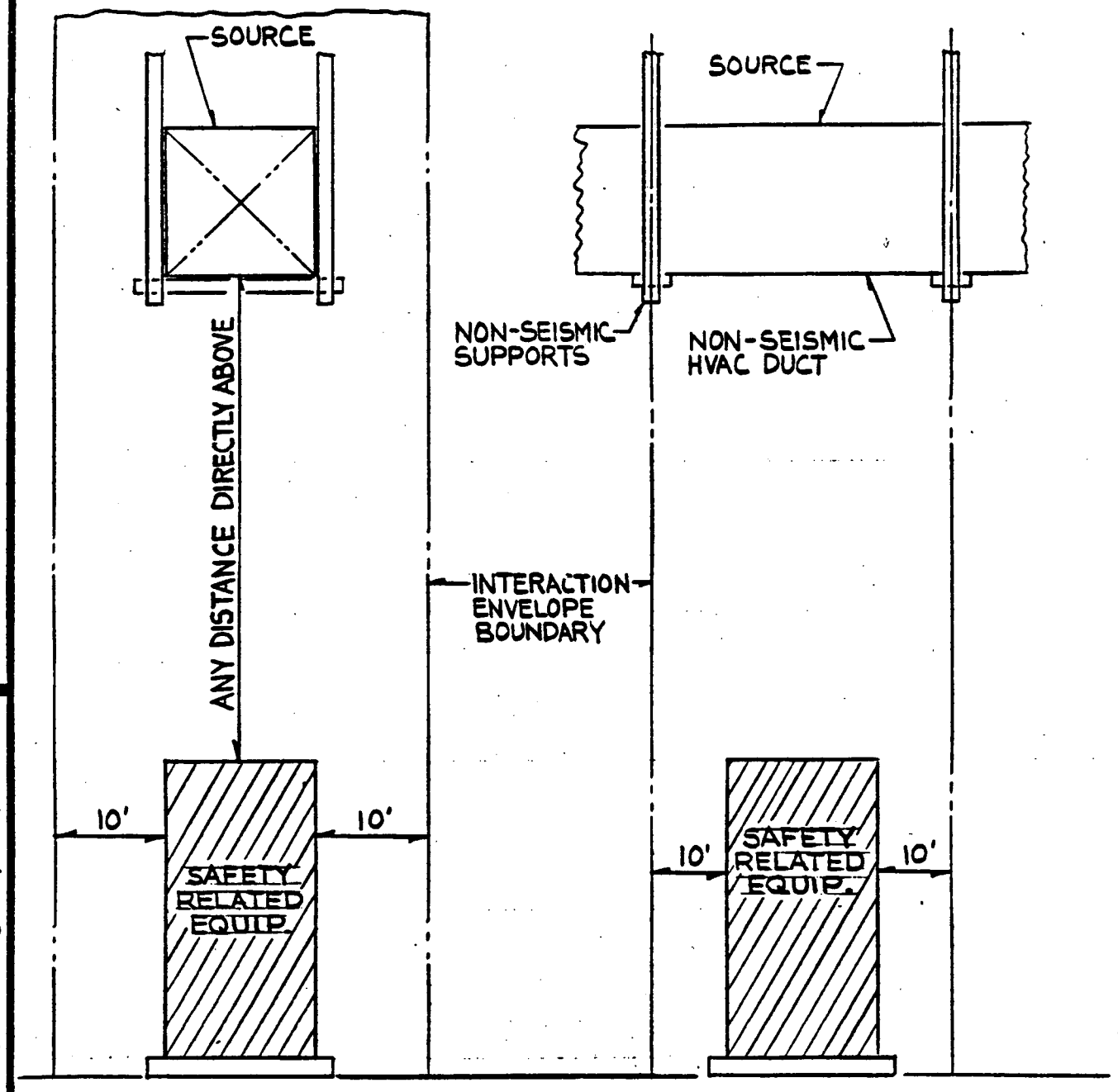

EBASCO SERVICES INCORPORATED	POWER AUTHORITY OF THE STATE OF NEW YORK JNDIAN POINT No. 3 NUCLEAR POWER PLANT SYSTEMS INTERACTION STUDY INTERACTION CRITERIA HVAC DUCTWORK	FIGURE 6-3
DIV. MNE DR. JM DATE 3-20-81 CH. MG SCALE NONE	APPROVED	

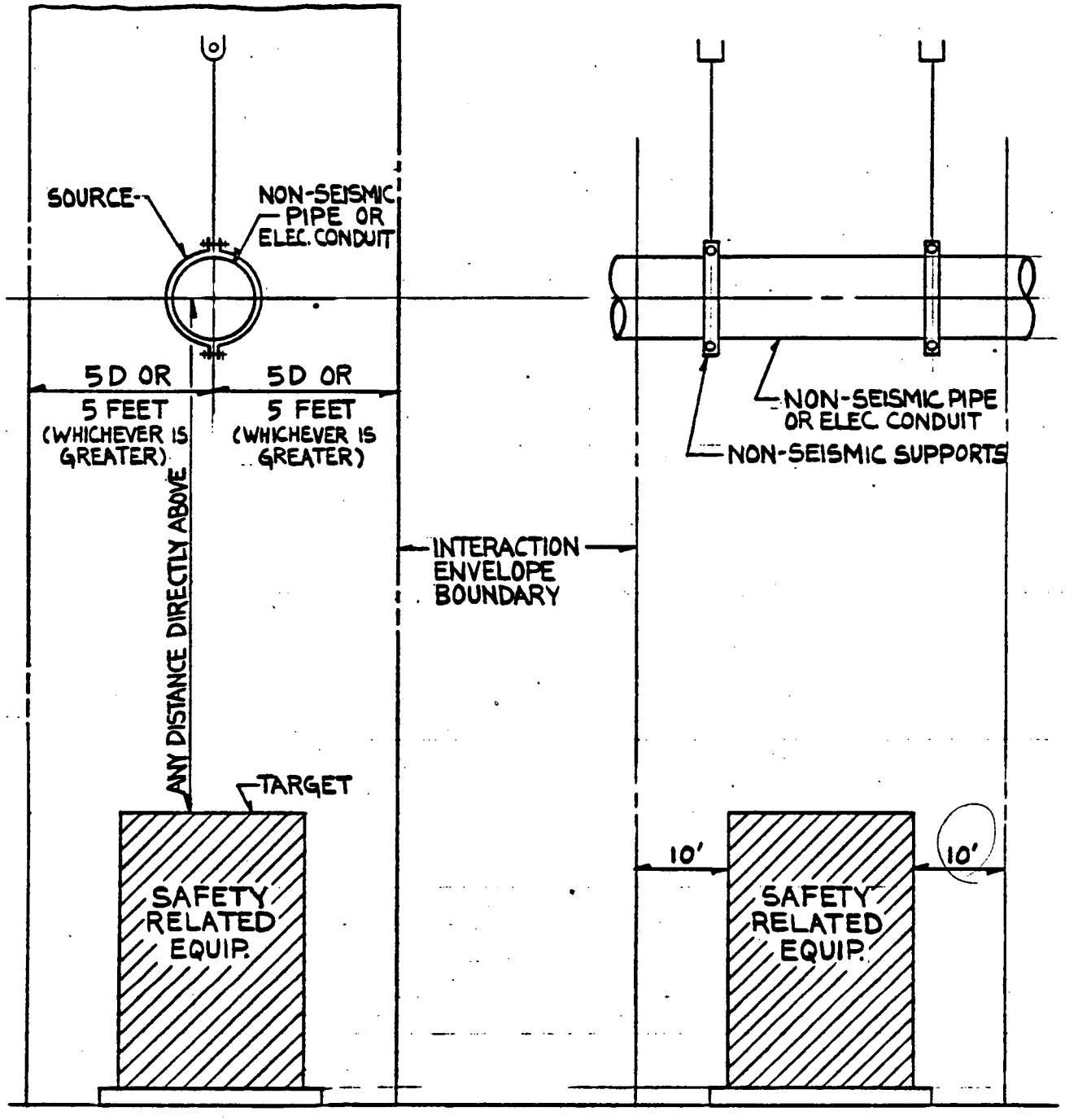

EBASCO SERVICES INCORPORATED	POWER AUTHORITY OF THE STATE OF NEW YORK INDIAN POINT No. 3 NUCLEAR POWER PLANT SYSTEMS INTERACTION STUDY INTERACTION CRITERIA MECH PIPES OR ELECT CONDUITS	FIGURE 6-4
DIV. MNE DR. JM DATE 3-20-81 CH. [illegible] SCALE NONE		

INDIAN POINT 3 NUCLEAR POWER PLANT

SYSTEMS INTERACTION STUDY

CHAPTER 7

7.0 QUALITY ASSURANCE

In order to assure that the Systems Interaction Study project meets the requirements of the Quality Assurance Program, the Project Quality Assurance Engineer shall assign qualified internal auditors to review the inprocess activities of the SIS Project personnel. Results of these audits shall be distributed to the SIS Project Manager and the PQAE for information and corrective action if required.

7.1 GENERAL

The contractor shall have in operation, over the duration of this contract, a system or program with supporting procedures as necessary which addresses the Quality Assurance requirements imposed in this section, and elsewhere in the contract.

7.2 ANALYSIS CRITERIA AND BASIS

The basic document which identifies the applicable regulatory requirements, design bases, codes and standards and other criteria shall be a requirement and specified in the Contractor's Engineering Procedures. The basic document shall be prepared at the outset of any analysis effort by the responsible engineering organization, and revised and approved in accordance with the applicable engineering procedure. The initial issue of the basic document is not intended to provide all the detailed requirements to be incorporated into analysis documents, but to provide sufficient basic requirements to permit the analysis process to proceed. As additional criteria are developed, they shall be incorporated into the basic document, following the review and approval prescribed by the applicable engineering procedure.

7.3 INTERNAL ANALYSIS REVIEWS

Internal Analysis Reviews shall be used during the analysis process, as defined in applicable engineering procedures, to assure acceptability of the document prior to the analysis verification process. These reviews shall consist of checking and approval of applicable calculations, system descriptions, design specifications, and other documents as required. Errors and deficiencies identified shall be documented and appropriate corrective action instituted to preclude repetition, as specified in engineering procedures.

7.4 ANALYSIS VERIFICATION

Analysis verification shall be referred on all final analysis documents by individuals or groups other than those who performed the original analysis work, in accordance with applicable engineering procedures, to assure compliance with applicable analysis bases, regulatory requirements, codes and standards. The authority and responsibilities of personnel performed these reviews shall be identified and controlled by engineering procedures.

The analysis verification process shall be performed in accordance with a plan which considers the importance of the engineering tasks, structure, system, or component, and is accomplished through one or more of the following actions:

- Independent review or special review of analysis documents.

- Alternate calculations necessary to assure the analysis meets the specified criteria.

The results of all analysis verification activities shall be documented, and reviewed by congnizant management personnel in accordance with applicable procedures.

7.5 DATE PACKAGE

A formal engineering data package review shall be established and consist of (as a minimum) the following:

A. Identify and list documentation on a Document List with revisions which are included in the data package.

B. The final review by the responsible engineers shall include sign-off on the "Document List", which attests that the engineering scope, including the support engineering data, relative to the assigned tasks have been completed.

C. A final supervisory review and approval sign-off of the engineering data package.

7.6 RECORDS

Analysis documents and reviews, records and changes thereto shall be collected, stored, and maintained as part of the official project records, in accordance with applicable record procedures.

7.7 TYPES OF DOCUMENTS

For the purposes of control, three types of documents shall be considered as a minimum:

- Documents supplied or referenced by the Authority for use by the Contractor.

- Technical documents prepared by the Contractor for delivery to the Authority, including design analysis report, drawings, and design documents.

7.7 TYPES OF DOCUMENTS (Cont'd)

- Documents for the control of contractor of sub-contractor activities, including the Engineering Manual, Quality Assurance Manual, and Procedures.

7.8 STORAGE AND SECURITY OF RECORDS

Records shall be stored in facilities which minimize the potential for their destruction by fire, flooding, theft, and deterioration from environmental conditions.

7.9 AUDITS

Audits shall be performed by the Contractor on activities which relate to the quality of the service performed, in accordance with a quality assurance procedure.

These audits shall include internal audits of the project organization and interfacing organizations. The audit procedure shall include provisions for planning, performance, evaluation, and reporting.

7.10 AUDIT RESULTS, EVALUATION AND REPORT

Audit results shall be documented, and then reviewed with management having responsibility in the area audited. The audit report shall include the following:

- Description of audit scope
- Identification of auditors
- Persons contracted during the audit
- Summary of audit results, including an evaluation statement regarding the effectiveness of the quality assurance program, applicable to the areas audited.
- Description of identified non-conformances
- Recommendations for corrective action, when applicable

7.11 REAUDIT

When warranted by audit results; deficient areas shall be reaudited on a timely basis to verify the effective implementation of corrective action.

7.12 AUDIT PROGRAM REVIEW

Audit data shall be analyzed by the Chief Quality Engineer on a periodic basis and reported to responsible management personnel for reviews and assessment.

8.0 Reference Documents

1. FSAR - Consolidated Edison Company of New York Indian Point Nuclear Generating Unit No. 3 (Sup 32 Nov '75)

2. Answers to AEC Questions (Sup 31 Oct '75)

3. Safety Evaluation Report by the Director of Licensing U.S. Atomic Energy Commission in the Matter of Con Ed Company of New York, Inc. 1973.

4. Fire Protection Safety Evaluation Report by NRC for IP3 (3-6-79)

5. Review of Indian Point Station Fire Protection Program Vol I. Dec 1976 (Rev. 1 April '77)

6. Vol II Prepared in response to APCSB 9.5-1 Appen. A (Rev. 1 April '77)

7. Indian Point Station Unit No. 3 - System Descriptions (Rev 1)

8. Probabilistic Risk Assessment: Pickard Lowe & Garrick Inc. (Oct 7, '80)

9. PASNY-Indian Point 3 Instrument Bus Failure Analysis (IE 79-27) EDS Job Number 0900-007-831 Report No. 02-0900-6 & 7 (Rev 0, 6-13-80)

10. Review & Evaluation of Systems Interactions Methods NUREG/CR-1901 BNL-NUREG-51333 (Jan '81)

8.0 Reference Documents (Cont'd)

11. Systems Interaction: State of the Art Review and Methods Evaluation NUREG/CR-1859 UCRL-53016
(Jan '81)

12. Final Report Phase I, Systems Interaction Methodology Applications Program NUREG/CR-1321 SAND 80-0384 AN
(April '80)

13. Description of the Systems Interaction Program for Seismically-Induced Events: Diablo Canyon Units 1 & 2
(R-4 Aug 29, '80)

Safety Evaluation Report
(Sup 11 Oct '80)

14. TMI Items Approved for Implementation NUREG 0737
(10-31-80)

15. Identification of Unresolved Safety Issues Relating to Nuclear Power Plants: Report to Congress NUREG 0510
(2-12-79)

16. Unresolved Safety Issues Summary: AQUA Book NUREG-0606 Vol. 4, No. 1
(2-19-82)

17. TMI-2 Lessons Learned, Task Force Final Report, Recommendation 9-Review of Safety Classifications and Qualifications. NUREG 0585
(Oct '79)

18. Action Plans for Implementing the Recommendations of the Presidents Commission & Other Studies of TMI 2 Accident. Task II. C.1, Systems Engineering Reliability Engineering & Risk Assessment NUREG 0660
(May '80)

8.0 Reference Documents (Cont'd)

19. BTP MEB-3-1: Postulated Break and Lea-Rage Locations in Fluid Systems Piping Outside Containment (5-76)

20. BTP APCSB 3-1: Protection Against Postulated Piping Failures in Fluid Systems Outside Containment (5-76)

21. BTP APCSB 9.5-1 Guidelines for Fire Protection for Nuclear Power Plants (6-76)

22. PRA Procedures Guide, A Guide to the Performance of Probabilistic Risk Assessment for Nuclear Power Plants NUREG/CR-2300 (R1 4.5.82)

23. NSSS Instrumentation and Control Equipment SO Int 320 Run Date 4-14-76 64 pages

24. Instrument Schedule Secondary Plant (Oct '71)
Con Ed Dwg. No. D-202540
Sheets 1 to 95 & 142

25. Westinghouse Electric Corp. Conventional Line Schedule Class 1 Piping 10 Sheets UE&C Dwg. No. 9321-C-23003-1 Con Ed Dwg No. C-202787 (Rev 1)

26. Westinghouse Electric Corp. Nuclear Line Schedule Sheets 1 to 39 UE&C Dwg No. 9321-C-27413-4 Con Ed Dwg No. C-202251 (6-77)

27. Westinghouse Electric Corp. Valve & Specialty List Sheets 1 to 104 UE&C Dwg No: 9321-LL-20433-8
9321-05-20433 (6-77)

8.0 Reference Documents (Cont'd)

28. WEDCO IPP3 Valve Report
Sheets 1 to 354
(6-20-74)

8.1 REFERENCE DRAWINGS

TITLE	DRAWING NO.	REV.
T/B MISC PIPE SUPPORTS	9321-F-11203	2
T/B & HTR BAY G.A. OPERATING FL.-EL 53'-0	9321-F-20043	6
T/B & HTR BAY G.A. MEZZ FL.-EL 36'-9	9321-F-20053	7
T/B & HTR BAY G.A. GROUND FL.-EL 15'-0	9321-F-20063	12
T/B & HTR BAY G.A. CROSS SECTION	9321-F-20073	5
T/B & HTR BAY G.A. CROSS SECTION	9321-F-20083	6
T/B & HTR BAY G.A. CROSS SECTION	9321-F-20093	4
T/B-TWO BAY EXTENSION GA PLANS & ELEV.	9321-F-20103	6
INTAKE STRUCTURE G.A. PLAN	9321-F-20113	7
INTAKE STRUCTURE G.A. SECTIONS	9321-F-20123	4
AUX FEED PUMP BLDG GA PLANS-SH #1	9321-F-20143	7
AUX FEED PUMP BLDG GA SECTIONS-SH #2	9321-F-20153	6
FLOW DIAGRAM-SYMBOLS	9321-F-20163	3
FLOW DIAGRAM-MAIN STEAM	9321-F-20173	21
FLOW DIAG.-COND & BOILER FEED PUMP SUCTION	9321-F-20183	18
FLOW DIAG.-BOILER FEEDWATER	9321-F-20193	18
FLOW DIAG.-EXTRACTION STEAM	9321-F-20203	9
FLOW DIAG.-FLASH EVAPORATOR	9321-F-20213	12
FLOW DIAG.-HEATER DRAINS & VENTS	9321-F-20223	7
FLOW DIAG.-MOISTURE SEP. & REHTR. DRAINS & VENTS	9321-F-20233	11
FLOW DIAG.-BOILER FD PMP TURBINE STM LINES D&V	9321-F-20243	6
FLOW DIAG.-CONDENSER AIR REM. & WTR BOX PRIMING	9321-F-20253	15
FLOW DIAGRAM-CIRCULATING WATER	9321-F-20263	10
FLOW DIAG-JACKET WTR TO DIESEL GENERATORS	9321-F-20283	7
FLOW DIAG-STARTING AIR TO DIESEL GENERATORS	9321-F-20293	6
FLOW DIAG-FUEL OIL TO DIESEL GENERATORS	9321-F-20303	7
FLOW DIAG-EXTRACTION STM TRAP SYSTEM	9321-F-20313	3
FLOW DIAG-GLAND SEALING FOR VALVES & PUMPS	9321-F-20323	1
FLOW DIAG-SERV. & CLG WTR RIVER WTR & FRESH WTR	9321-F-20333	13
FLOW DIAGRAM-CITY WATER	9321-F-20343	3
FLOW DIAGRAM-STATION AIR	9321-F-20353	13
FLOW DIAGRAM-INSTRUMENT AIR	9321-F-20363	18
FLOW DIAG.-LUBE OIL	9321-F-20373	7
FLOW DIAG.-CHEMICAL FEED	9321-F-20383	10
FLOW DIAGRAM-CHLORINATION	9321-F-20393	6
FLOW DIAGRAM-HYDROGEN & CO_2	9321-F-20403	6
FLOW DIAGRAM-MAIN STM TRAPS-SH #1	9321-F-20413	7
FLOW DIAGRAM-MAIN STM TRAPS-SH #2	9321-F-20413	2
YARD AREA-H_2 & CO_2 PIPING-SH #1	9321-F-20443	6
T/B & HTR BAY H_2 & CO_2 PIPING-SH #2	9321-F-20453	2
TURB HALL & SUPERHTR BLDG UNIT #1 PIPING TIE-INS FOR UNIT #3 PIPING SYSTEMS	9321-F-20483	3
YARD AREA-WEST OF CONT BLDG MAIN STM PPG	9321-F-20493	13

8.1 REFERENCE DRAWINGS (Cont'd)

TITLE	DRAWING NO.	REV.
YARD AREA-WEST OF CONT BLDG M.S. PPG SECT'S & ELEV	9321-F-20503	11
T/B & HTR BAY MAIN STM PPG	9321-F-20513	8
T/B & HTR BAY MAIN STM PPG	9321-F-20523	5
T/B & HTR BAY MAIN STM PPG	9321-F-20533	5
T/B & HTR BAY COND & BOILER FD PMP SUCTION PPG	9321-F-20543	12
T/B & HTR BAY COND & BOILER FD PMP SUCTION PPG	9321-F-20553	9
T/B & HTR BAY COND & BOILER FD PMP SUCTION PPG	9321-F-20563	16
T/B & HTR BAY COND & BOILER FD PMP SUCTION PPG	9321-F-20573	13
T/B & HTR BAY COND & BOILER FD PMP SUCTION PPG	9321-F-20583	9
T/B & HTR BAY COND & BOILER FD PMP SUCTION PPG	9321-F-20593	10
T/B & HTR BAY MAIN STM PIPING	9321-F-20603	7
T/B & HTR BAY GLAND SEAL PPG	9321-F-20673	6
T/B & HTR BAY EXTRACTION STM PPG	9321-F-20693	7
YARD AREA-WEST OF CONT BLDG MAIN STM PIPING	9321-F-20703	10
T/B & HTR BAY SER & CLG WTR PPG RIVER WTR SYSTEM	9321-F-20973	8
T/B & HTR BAY SER & CLG WTR PPG RIVER WTR SYSTEM	9321-F-20983	6
T/B & HTR BAY SER & CLG WTR PPG RIVER WTR SYSTEM	9321-F-20993	9
T/B & HTR BAY SER & CLG WTR PPG RIVER WTR SYSTEM	9321-F-21003	8
T/B & HTR BAY SER & CLG WTR PPG CLOSED SYSTEM	9321-F-21023	7
T/B & HTR BAY SER & CLG WTR PPG CLOSED SYSTEM	9321-F-21033	6
CONTROL BLDG SERV & CLG WTR PPG CLOSED SYSTEM	9321-F-21053	7
INTAKE STRUCTURE SERV WTR PPG RIVER WTR SYS	9321-F-21063	12
INTAKE STRUCTURE SERV WTR PPG RIVER WTR SYS	9321-F-21073	11
CONTROL BLDG INSTRUMENT AIR PPG	9321-F-21163	13
SAFETY VALVE SETTINGS FOR STM GEN SECONDARY SIDE	9321-F-22023	2
CONTROL BLDG & PAB REST & SUPPT DESIGN LINE 11-SS	9321-F-22393	5
DIESEL GEN BLDG GENERAL ARRG'T	9321-F-22503	4
DIESEL GEN BLDG GENERAL ARRG'T	9321-F-22513	6
DIESEL GEN BLDG SERV WTR & STARTING AIR PPG	9321-F-22573	8
DIESEL GEN BLDG FUEL OIL & JACKET WTR PPG	9321-F-22583	11
DIESEL GEN BLDG FUEL OIL & JACKET WTR PPG	9321-F-22593	6
DIESEL GEN BLDG EXHAUST SYSTEM	9321-F-22603	5
INTAKE STRUCTURE CW PPG SHT NO. 1	9321-F-22623	8
F.D. COND & BLR FD PUMP SUCTION ELEC FREEZE PROTECT	9321-F-22703	3
F.D. BLR FW ELECTRICAL FREEZE PROTECTION	9321-F-22713	2
F.D. SERV & CLG WTR-RIV & FRESH WTR ELEC FREEZE PROT	9321-F-22723	2
F.D. CHLORINATION ELEC. FREEZE PROTECTION	9321-F-22733	3
F.D. CIRC WTR ELEC FREEZE PROTECTION	9321-F-22743	3
F.D. FLASH EVAP ELEC FREEZE PROTECTION	9321-F-22753	2
F.D. MAIN STEAM ELEC FREEZE PROTECTION	9321-F-22773	2
F.D. FUEL OIL TO DIESEL GEN ELEC FREEZE PROT.	9321-F-22783	2
F.D. MAIN STEAM TRAPS ELEC FREEZE PROT.	9321-F-22793	2
F.D. JACK WTR TO DIESEL GEN ELEC FREEZE PROT.	9321-F-22803	2
F.D. STATION AIR PPG ELEC FREEZE PROT.	9321-F-22813	3

8.1 REFERENCE DRAWINGS (Cont'd)

TITLE	DRAWING NO.	REV.
CONVENTIONAL LINE SCH. CLASS 1 PPG SHTS 1-10 SHT 9-REV. 6, SHT 10-REV. 3	9321-F-23003	2
CONT BLDG GA EL 95'-0	9321-F-25013	7
CONT BLDG GA EL 68'-0	9321-F-25023	8
CONT BLDG GA EL 46'-0	9321-F-25033	6
CONT BLDG GA SECTIONS	9321-F-25063	6
CONT BLDG GA SECTIONS	9321-F-25073	5
CONT BLDG GA SECTIONS	9321-F-25083	5
CONT BLDG REFUELING EQUIP LAYDOWN & STORAGE	9321-F-25093	3
PAB GA EL 15'-0, 32'-6, 34'-0 & 41'-0	9321-F-25103	11
PAB GA SECTIONS	9321-F-25113	13
PIPE TRENCH GA	9321-F-25123	5
FAN ROOM & PIPE TRENCH GA	9321-F-25133	7
FUEL STROAGE BLDG GA*PRINT	9321-F-25143	7
PAB GA EL 55'0 & 73'-0	9321-F-25153	14
PAB GA	9321-F-25163	12
WASTE HOLDUP TANK PIT GA	9321-F-25173	8
FAN ROOM GA	9321-F-25183	9
NUCLEAR TANK FARM GA	9321-F-25223	3
NUCLEAR TANK FARM GA	9321-F-25233	3
CONT BLDG-COMP PPG AT REACTOR COOL. PUMP #31	9321-F-25263	12
CONT BLDG-COMP PPG AT REACTOR COOL. PUMP #32	9321-F-25273	13
CONT BLDG-COMP PPG AT REACTOR COOL. PUMP #33	9321-F-25283	12
CONT BLDG-COMP PPG AT REACTOR COOL. PUMP #34	9321-F-25293	13
CONT BLDG RTD PPG FOR PRIMARY COOLANT SYS	9321-F-25323	8
CONT BLDG PRI COOL. SYS LOOP TO STM GEN #31	9321-F-25333	6
CONT BLDG PRI COOL. SYS LOOP TO STM GEN #32	9321-F-25343	5
CONT BLDG PRI COOL. SYS LOOP TO STM GEN #33	9321-F-25353	6
CONT BLDG PRIM COOL PRESSURIZER PPG (NORTH 1/2)	9321-F-25373	12
CONT BLDG PRIM COOL PRESSURIZER PPG (SOUTH 1/2)	9321-F-25383	13
CONT BLDG MAIN STM PPG-STM GEN #31&32	9321-F-25393	11
CONT BLDG MAIN STM PPG-STM GEN #33&34	9321-F-25403	11
CONT BLDG MAIN STM PPG-STM GEN #31&32	9321-F-25413	13
CONT BLDG MAIN STM PPG-STM GEN #33&34	9321-F-25423	12
CONT BLDG RTD PPG FOR PRIM COOL SYS. SH NO. 2	9321-F-25433	9
CONT BLDG RTD PPG FOR PRIM COOL SYS. SH NO. 3	9321-F-25443	8
CONT BLDG PRIM COOL PRESS SAFETY RELIEF VALVE PPG	9321-F-25453	11
CONT BLDG PRIM COOL PRESS. SAFETY RELIEF VALVE PPG	9321-F-25463	8
CONT BLDG RTD PPG FOR PRIM COOL SYS. SH NO. 4	9321-F-25473	9
CONT BLDG PRESS SAFETY RELIEF VALVES RESTR. DETAILS	9321-F-25483	6
CONT BLDG BOILER FD PPG-STM GEN #31&32	9321-F-25493	7
CONT BLDG BOILER FD PPG-STM GEN #33&34	9321-F-25503	7
CONT BLDG BOILER FD PPG-STM GEN #31&32	9321-F-25513	8
CONT BLDG BOILER FD PPG-STM GEN #33&34	9321-F-25523	8
STM GEN BLOWDOWN TREATMENT SYSTEM	9321-F-25573	1
CONT BLDG STM GEN BLOWDOWN PPG	9321-F-25583	8

8.1 REFERENCE DRAWINGS (Cont'd)

TITLE	DRAWING NO.	REV.
CONT BLDG STM GEN BLOWDOWN PPG	9321-F-25593	11
STM GEN NITROGEN CIRCULATION SYS.	9321-F-25603	2
CONT BLG-COMP PPG IN RESIDUAL HT EX. ROOM	9321-F-25613	17
CONT BLG-COMP PPG IN RESIDUAL HT EX. ROOM	9321-F-25623	17
CONT BLDG AUX COOLANT SYS	9321-F-25633	14
CONT BLDG AUX COOLANT SYS	9321-F-25643	10
CONT BLDG AUX COOLANT SYS SECTIONS	9321-F-25653	12
CONT BLDG AUX COOLANT SYS SECTIONS	9321-F-25663	9
CONT BLDG AUX COOLANT SYS PPG AT REACTOR COOLING SUPP BLOCK	9321-F-25673	5
PAB COMPOSITE PPG ARRG'T EL 55'-0 SHT #5	9321-F-25683	7
PAB COMPOSITE PPG ARRG'T EL 55'-0 SHT #6	9321-F-25693	9
PAB COMPOSITE PPG ARRG'T EL 55'-0 SHT #1	9321-F-25703	7
PAB COMPOSITE PPG ARRG'T EL 55'-0 SHT #2	9321-F-25713	16
PAB COMPOSITE PPG ARRG'T EL 55'-0 SHT #3	9321-F-25723	17
PAB COMPOSITE PPG ARRG'T EL 55'-0 SHT #4	9321-F-25733	10
PAB DEMIN PPG	9321-F-25743	8
PAB DEMIN PPG	9321-F-25753	6
FUEL STORAGE BLDG AUX COOLANT SYS	9321-F-25763	15
FUEL STORAGE BLDG AUX COOLANT SYS	9321-F-25773	13
PAB DEMIN PPG	9321-F-25783	5
PAB DEMIN PPG	9321-F-25793	5
PAB DEMIN PPG	9321-F-25803	5
CONT BLDG CVCS	9321-F-25813	14
CONT BLDG CVCS	9321-F-25823	11
CONT BLDG CVCS	9321-F-25833	7
CONT BLDG CVCS	9321-F-25843	6
PAB COMP PPG ARRG'T IN RHR ROOM	9321-F-25853	0
PAB COMP PPG ARRG'T EL 73'-0	9321-F-25863	15
PAB COMP PPG ARRG'T EL 73'-0	9321-F-25873	12
PAB COMP PPG ARRG'T EL 73'-0	9321-F-25883	20
PAB COMP PPG ARRG'T EL 73'-0	9321-F-25893	17
PAB COMP PPG ARRG'T AT RHR PUMPS	9321-F-25903	8
PAB COMP PPG ARRG'T IN PIPING BAY	9321-F-25913	16
PAB COMP PPG ARRG'T IN PIPING BAY	9321-F-25923	12
PAB DEMIN PPG	9321-F-25933	6
PAB GAS DECAY TANK PIPING	9321-F-25943	7
PAB GAS DECAY TANK PIPING	9321-F-25953	7
SAMPLING SYS PPG	9321-F-25973	14
VENT & DRAIN DETAILS FOR NUCLEAR PIPING	9321-F-25993	4
CONT BLDG LOCATION OF PIPE SLEEVES	9321-F-26033	10
CONT BLDG PRESS. RELIEF VALVE DRAIN PPG	9321-F-26043	1
FLOW DIAG. TAGGED INSULATION FOR ISI	9321-F-26053	1
CONT BUILDING SAFETY INJECTION SYS MODIFICATIONS	9321-F-26063	3
CONT BLDG SI PPG FROM SUMP TO EX PUMP SUCTION	9321-F-26133	11
CONT BLDG SAFETY INJECTIONS SYS	9321-F-26143	14
CONT BLDG SAFETY INJECTIONS SYS	9321-F-26153	15
CONT BLDG SAFETY INJECTIONS SYS	9321-F-26163	14
CONT BLDG SAFETY INJECTIONS SYS	9321-F-26173	15

8.1 REFERENCE DRAWINGS (Cont'd)

TITLE	DRAWING NO.	REV.
CONT BLDG CONT SPRAY SYS (SOUTH 1/2)	9321-F-26223	4
CONT BLDG CONT SPRAY SYS (NORTH 1/2)	9321-F-26233	3
CONT BLDG CONT SPRAY SYS SECTIONS	9321-F-26243	3
CONT BLDG CONT SPRAY SYS SECTIONS	9321-F-26253	4
CONT BLDG SAFETY INJECTIOLN SYS SECTIONS	9321-F-26263	13
CONT BLDG PPG COMP SECTIONS	9321-F-26273	1
PAB COMP PPG ARRG'T IN FILTER ROOM	9321-F-26293	11
PAB COMP PPG ARRG'T IN FILTER ROOM	9321-F-26303	8
NUCLEAR TANK FARM COMP PPG SHT NO. 1	9321-F-26313	10
NUCLEAR TANK FARM COMP PPG SHT NO. 2	9321-F-26323	10
NUCLEAR TANK FARM COMP PPG SHT NO. 3	9321-F-26333	10
NUCLEAR TANK FARM COMP PPG SHT NO. 4	9321-F-26343	8
PAB COMP PPG ARRG'T AT EL 73'-0	9321-F-26363	13
PAB COMP PPG ARRG'T AT EL 73'-0	9321-F-26373	12
ARRG'T OF ENCLOSURE TANK FOR SIS SUMP LINE VALVE	9321-F-26423	6
CONT BLDG WASTE DISPOSAL SYS (NORTH 1/2)	9321-F-26453	18
CONT BLDG WASTE DISPOSAL SYS (SOUTH 1/2)	9321-F-26463	10
VALVE LEAKOFF PPG	9321-F-26473	5
VALVE LEAKOFF PPG	9321-F-26483	3
HOLDUP TANK PIT & PIPE TRENCH FLOOR & HUB DRAIN	9321-F-26493	6
CONT BLDG SERV WTR HEADER DRAINS	9321-F-26503	4
CONT BLDG SERV WTR HEADER DRAINS	9321-F-26513	3
GROSS FAILED FUEL DETECTOR PPG SYS	9321-F-26523	2
FLOW DIAG POST ACCIDENT CONT SAMPLING SYS	9321-F-26533	2
HOLDUP TANK PIT COMP PPG	9321-F-26553	20
HOLDUP TANK PIT COMP PPG	9321-F-26563	16
PIPE WHIP RESTRAINS SHT NO. 1	9321-F-26573	8
PIPE WHIP RESTRAINS SHT NO. 2	9321-F-26583	7
PIPE WHIP RESTRAINS SHT NO. 3	9321-F-26593	6
PIPE WHIP RESTRAINS SHT NO. 4	9321-F-26603	5
PIPE WHIP RESTRAINS SHT NO. 5	9321-F-26613	4
PIPE WHIP RESTRAINS SHT NO. 6	9321-F-26623	4
PIPE WHIP RESTRAINS SHT NO. 7	9321-F-26633	2
PIPE WHIP RESTRAINS SHT NO. 8	9321-F-26643	4
PAB COMP PPG ARRG'T AT SIS PUMPS	9321-F-26663	17
PAB COMP PPG ARRG'T AT SIS PUMPS	9321-F-26673	10
PAB COMP PPG ARRG'T AT EL 15'-0 FOR SPENT RESIN CHEMICAL DRAIN & SUMP TANKS	9321-F-26683	9
PAB COMPOSITE PPG ARRG'T IN RAD. TUNNELS	9321-F-26703	17
PAB COMPOSITE PPG ARRG'T IN RAD. TUNNELS	9321-F-26713	17
PAB COMPOSITE PPG ARRG'T IN RAD. TUNNELS	9321-F-26723	20
PAB COMPOSITE PPG ARRG'T IN RAD. TUNNELS	9321-F-26733	22
TRENCH AREA PIPE WHIP RESTRAINTS	9321-F-26753	3
COMPOSITE PPG IN TRENCHES	9321-F-26763	10
COMPOSITE PPG IN TRENCHES	9321-F-26773	18

8.1 REFERENCE DRAWINGS (Cont'd)

TITLE	DRAWING NO.	REV.
COMPOSITE PPG IN TRENCHES	9321-F-26783	14
COMPOSITE PPG IN TRENCHES	9321-F-26793	11
PAB COMP PPG ARRG'T AT CONT SPRAY PUMPS & ADDITIVE TANK AT EL 41'-0	9321-F-26823	10
PAB COMP PPG AT MONITOR TANK PUMPS & PPG WTR PUMPS	9321-F-26833	11
PAB SERV AIR & CITY WTR PPG	9321-F-26843	6
PAB SERV AIR & CITY WTR PPG	9321-F-26853	6
CONT BLDG POST ACCIDENT CONT AIR SAMPLING SYS	9321-F-26863	6
CONT. BLDG SERVICE AIR, CITY WATER PIPING	9321-F-26873	6
CONT BLDG DEMISTER & COOLING COIL DRAIN PIPING	9321-F-26883	7
CONT BLDG DEMISTER & COOLING COIL DRAIN PIPING	9321-F-26893	7
CONT BLDG SERVICE WATER PIPING	9321-F-26903	9
CONT BLDG SERVICE WATER PIPING	9321-F-26913	7
CONT BLDG SERVICE WATER PIPING	9321-F-26923	5
CONT BLDG SERVICE WATER PIPING	9321-F-26933	5
FUEL STORAGE BLDG SERV AIR & CITY WTR PPG	9321-F-26953	3
PAB FLOOR & HUB DRAINS EL 15'-0, 34'-0, 41'-0	9321-F-26963	9
PAB FLOOR & HUB DRAINS EL 53'-0, 73'-0	9321-F-26973	6
CONT BLDG HYDROGEN RECOMBINER PIPING	9321-F-26983	13
SERV WTR PPG IN YARD AREA	9321-F-27003	8
SERV WTR PPG IN YARD AREA	9321-F-27013	7
SERV WTR PPG IN YARD AREA	9321-F-27023	9
SERVICE WATER PIPING BACKUP SUPPLY	9321-F-27033	7
NUCLEAR EQUIPMENT HYDROGEN PIPING	9321-F-27053	3
CONT BLDG IN-CORE INSTR. PPG SUPPORTS G.A.	9321-F-27063	3
CONT BLDG IN-CORE INSTR. PPG SUPPORTS DETAILS	9321-F-27073	3
CONT BLDG CHARCOAL FILTER SPRAY PIPING	9321-F-27093	7
CONT BLDG CHARCOAL FILTER SPRAY PIPING	9321-F-27103	5
CONT BLDG PIPING PENETRATIONS DETAILS OF HOT LINES	9321-F-27123	9
CONT BLDG PIPING PENETRATIONS DETAILS OF COLD LINES	9321-F-27133	11
CONT BLDG PIPING PENETRATIONS DETAILS OF PURGE LINES-SPARE CONNECTIONS	9321-F-27143	8
CONT BLDG PPG PENET. DETAILS OF FUEL TRANSFER	9321-F-27153	4
CONT BLDG ARRG'T OF PIPING PENETRATIONS	9321-F-27163	6
CONT BLDG PIPING PENETRATIONS SCHEDULE	9321-F-27173	8
CONT BLDG PIPING PENETRATIONS SCHEDULE	9321-F-27183	10
FLOW DIAG WASTE DISPOSAL SYS SHT NO. 1	9321-F-27193	23
FLOW DIAG AUX COOLANT SYS	9321-F-27203	12
FLOW DIAG AIR COOLING SYS FOR HOT PENETRATIONS	9321-F-27213	7
FLOW DIAG SERV WTR SYS NUCLEAR STM SUPPLY PLANT	9321-F-27223	20
FLOW DIAG NITROGEN TO NUCLEAR EQUIPMENT	9321-F-27233	12
F.D. PRIM M.V. WTR SYS NUC. STM SUPPLY PLANT	9321-F-27243	14
FLOW DIAG AUTO. GAS ANALYZER SYS.	9321-F-27253	6
F.D. PENET. & LINER WELD JOINT CHANNEL PRESS. SYS	9321-F-27263	11
F.D. AUX STM & CONDENSATE FOR NUC. EQUIP.	9321-F-27273	11
F.D. NUCLEAR EQUIPMENT DRAINS	9321-F-27283	11
F.D. STM GENERATOR BLOWDOWN SYS.	9321-F-27293	11
F.D. WASTE DISPOSAL SYS SH #2	9321-F-27303	12

8.1 REFERENCE DRAWINGS (Cont'd)

TITLE	DRAWING NO.	REV.
FLOW DIAG. PPG AT REACTOR COOLANT PUMPS	9321-F-27343	9
FLOW DIAG. SAFETY INJECTION SYS	9321-F-27353	14
F.D. CHEM & VOLUME CONTROL SYS.	9321-F-27363	15
F.D. CHEM & VOLUME CONTROL SYS.	9321-F-27373	15
F.D. REACTOR COOLANT SYSTEM	9321-F-27383	14
HOT PENETRATIONS COOLING SYS PIPING	9321-F-27423	5
HOT PENETRATIONS COOLING SYS PIPING	9321-F-27433	5
HOT PENETRATIONS COOLING SYS PIPING	9321-F-27443	5
FLOW DIAG. SAMPLING SYS	9321-F-27453	9
F.D. ISOLATION VALVE SEAL WATER SYS.	9321-F-27463	10
F.D. REACTOR COOLANT SYS SH #2	9321-F-27473	16
CONT BLDG-SERV WTR PPG FOR RECIRC FAN MOTOR COOLERS	9321-F-27483	4
CONT BLDG-SERV WTR PPG FOR RECIRC FAN MOTOR COOLERS	9321-F-27493	4
FLOW DIAG SAFETY INJECTION SYS SH #2	9321-F-27503	11
FLOW DIAG AUX COOLANT SYS	9321-F-27513	16
FLOW DIAG HYDROGEN RECOMBINER SYS	9321-F-27533	6
ISOLATION VALVE SEAL WTR PIPING SH #1	9321-F-27683	8
ISOLATION VALVE SEAL WTR PIPING SH #2	9321-F-27693	7
F.D. CONT BLDG LEAK RATE TEST & PRESS SYS.	9321-F-27783	3
CONT BLDG LEAK RATE TEST ARRG'T OF EQUIP. & PIPING	9321-F-27793	1
CONT BLDG ANNULUS SM. PPG COMPOSITE (SE QUAD)	9321-F-27803	6
CONT BLDG ANNULUS SM. PPG COMPOSITE (SE QUAD)	9321-F-27813	4
CONT BLDG ANNULUS SM. PPG COMPOSITE (SE QUAD)	9321-F-27823	4
CONT BLDG ANNULUS SM. PPG COMPOSITE (SE QUAD)	9321-F-27833	5
CONT BLDG ANNULUS SM. PPG COMPOSITE (NE QUAD)	9321-F-27843	2
CONT BLDG ANNULUS SM. PPG COMPOSITE (NE QUAD)	9321-F-27853	7
CONT BLDG ANNULUS SM. PPG COMPOSITE (NW QUAD)	9321-F-27863	5
CONT BLDG ANNULUS SM. PPG COMPOSITE (NW QUAD)	9321-F-27873	5
CONT BLDG ANNULUS SM. PPG COMPOSITE (SW QUAD)	9321-F-27883	6
CONT BLDG ANNULUS SM. PPG COMPOSITE (SW QUAD)	9321-F-27893	4
CONT BLDG ANNULUS SM. PPG COMPOSITE (NE QUAD)	9321-F-27903	3
TUBING ARRG'T REACTOR COOLANT LOOPS 1 & 2 BOUNDARY CHECK VALVE TESTING SH #1	9321-F-28043	1
TUBING ARRG'T REACTOR COOLANT LOOPS 3 & 4 BOUNDARY CHECK VALVE TESTING SH #2	9321-F-28053	1
REACTOR COOLANT SYS BOUNDARY CHECK VALVE TESTING SH #1	9321-F-28063	1
CABLE SCHEMATIC MAIN POWER GENERATOR, TRANSFORMERS AND TIE-LINES	9321-F-30033	10
SINGLE LINE DIAGRAM 480V. MOTOR CONTROL CENTERS	9321-F-30053	18
THREE LINE DIAGRAM LOW VOLTAGE	9321-F-30073	11
BLOCK DIAG. 3 LINE DIAG-LOW VOLTAGE	9321-F-30093	0

8.1 REFERENCE DRAWINGS (Cont'd)

TITLE	DRAWING NO.	REV.
MAIN THREE LINE DIAGRAM	9321-F-30113	17
GROUNDING LAYOUT FUEL STORAGE BLDG & WASTE HOLD-UP TANK PIT	9321-F-30163	5
MISC BLDG'S ROOF DRAINS	9321-F-40123	5
POTABLE CITY WATER	9321-F-40153	5
T/B HTR BAY HEATING PLANS	9321-F-40183	9
T/B HTR BAY HEATING PLANS	9321-F-40193	7
T/B VENTILATION PLAN, SECTIONS & DETAILS	9321-F-40203	2
T/B HTR BAY HEATING PLANS & SECT.	9321-F-40213	6
CONT BLDG AIR RECIRC SYS ABOVE EL 95'-0	9321-F-40233	3
CONT BLDG AIR RECIRC SYS ABOVE EL 85'-0	9321-F-40243	4
CONT BLDG AIR RECIRC SYS ABOVE EL 68'-0	9321-F-40253	5
CONT BLDG AIR RECIRC SYS SECTIONS A-A	9321-F-40273	3
CONT BLDG AIR RECIRC SYS SECTIONS B-B	9321-F-40283	4
CONT BLDG AIR RECIRC SYS SECTIONS	9321-F-40293	4
CONT BLDG AIR RECIRC SYS HANGERS & SUPPORTS	9321-F-40303	3
CONT BLDG AIR RECIRC SYS HANGERS & SUPPORTS	9321-F-40313	2
CONT BLDG EMERGENCY SHOWER & EYE WASH PIPING	9321-F-40323	1
FAN HOUSE PAB, FSB & CB EXH., PURGE & DILUTION FANS SECT.	9321-F-40343	8
PAB H&V PLANS ELEV 15'-0, 34'-0 & 41'-0	9321-F-40363	5
PAB H&V PLANS ELEV 55'-0, & 73'-0	9321-F-40373	5
PAB H&V SECTIONS	9321-F-40383	4
PAB H&V SECTIONS	9321-F-40393	4
PAB H&V SECTIONS	9321-F-40403	2
FUEL STORAGE BLDG HEATING & VENTILATION PLANS	9321-F-40413	3
FUEL STORAGE BLDG H & V SECTIONS & DETAILS	9321-F-40423	3
MISC PLANT AREAS & BLDG VENTILATION SYSTEMS	9321-F-40433	3
AUX FEED PMP BLDG ROOF, FL & HUB DRNS PLANS & SECT.	9321-F-40473	1
DIESEL GENERATOR BLDG HEATING & VENTILATION	9321-F-40483	4
DIESEL GEN. BLDG FIRE PROTECTION-SPRAY SYS	9321-F-40493	2
PLANT STM HEATING STM & COND. DISTRIBUTION HEADERS	9321-F-40513	8
PLANT STM HEATING STM & COND. DISTRIBUTION HEADERS	9321-F-40523	6
PLANT STM HEATING STM & COND. DISTRIBUTION HEADERS	9321-F-40533	6
ELEC. TUNNEL, MCB & D.G. BLDGS VENT.-SCHEMATIC	9321-F-40543	1
ELEC. TUNNEL VENTILATION EQUIP ROOM (EL 65'-0)	9321-F-40553	2
CONTROL BLDG VENTILATION FAN ROOM (EL 27'-0)	9321-F-40563	2
FLOW DIAG. AUX STM SUPLY & COND RETURN SYS.	9321-F-40573	10
PAB HEATING & VENTILATION	9321-F-40583	1
CONTROL ROOM (EL 53'-0) AIR CONDITIONING	9321-F-40593	3

*PRINT

8.1 REFERENCE DRAWINGS (Cont'd)

TITLE	DRAWING NO.	REV.
T/B ELEVATOR MACH. RM. & LUBE OIL STRG RM.	9321-F-40613	1
EMERG. SHOWER & EYE WASH PPG-T/B, PAB, & AFPB	9321-F-40643	1
CONTROL BLDG EL 15'-0 & EL 33'-0 HEATING & VENT.	9321-F-40653	2
CONTROL BLDG AIR COND EQUIP RM., CLG WTR, STM & COND.	9321-F-40683	4
ELEC TUNNEL FIRE PROTECTION SPRAY SYS SECT.	9321-F-40703	3
HEATED ENCLOSURE FOR CHEM. PMPS	9321-F-40733	2
SHIELD WALL AREA ENCLOSURE FOR M.S. & BF PIPES HTG	9321-F-40753	2
SHIELD WALL AREA ENCLOSURE FOR M.S. & BF PIPES HTG ROOF DRAIN	9321-F-40763	2
SHIELD WALL AREA ENCLOSURE FOR M.S. & BF PIPES HTG ROOF VENT.	9321-F-40773	2
AUX STM & COND. LINES BETWEEN UNIT 1 & UNIT 3	9321-F-40783	3
POST ACCIDENT CONT. VENTING SYSTEM	9321-F-40793	7
FUEL STORAGE BLDG EMERGENCY EXHAUST SYS.	9321-F-40803	5
FAN HOUSE PAB EXH & CB PURGE FILTER SYS.	9321-F-40823	4
FAN HOUSE PAB EXH & CB PURGE FILTER SYS.	9321-F-40833	4
FAN HOUSE CB PRESSURE RELIEF FILTER SYS.	9321-F-40843	4
FAN HOUSE PAB EXH, CB PURGE & CB PRESS RELIEF FILTER SYS.	9321-F-40853	4
FIRE PROT. SYS. PAB EXH, CB PURGE & CB PRESS RELIEF FILTER SYS.	9321-F-40863	2
FIRE PROT. SYS. PAB EXH, CB PURGE & CB PRESS RELIEF FILTER SYS.	9321-F-40873	2
DRAINS PAB EXH, CB PURGE & CB PRESS RELIEF FILTER SYS	9321-F-40883	2
DRAINS PAB EXH, CB PURGE & CB PRESS RELIEF FILTER SYS	9321-F-40893	2
CONT BLDG RESTRAINT & SUPPORT DESIGN	9321-F-53083	3
CONT BLDG RESTRAINT & SUPPORT DESIGN	9321-F-55783	5
CONT BLDG RESTRAINT & SUPPORT DESIGN	9321-F-55793	8
CONT BLDG RESTRAINT & SUPPORT DESIGN	9321-F-55803	5
TRANSMITTER RACKS PPG ARRG'T-SH #1 INSTRUMENTATION	9321-F-70023	4
TRANSMITTER RACKS PPG ARRG'T-SH #2 INSTRUMENTATION	9321-F-70033	8
TRANSMITTER RACKS PPG ARRG'T-SH #3 INSTRUMENTATION	9321-F-70043	2
CABLED TUBING ARRG'T SH #1 INSTRUMENTATION	9321-F-70053	7
CABLED TUBING ARRG'T SH #2 INSTRUMENTATION	9321-F-70063	8
CABLED TUBING JUNCTION BOX ARRG'T INSTRUMENTATION	9321-F-70073	2
INSTR AIR SUPPLY SH #1 INSTRUMENTATION	9321-F-70083	5
INSTR AIR SUPPLY SH #1 INSTRUMENTATION	9321-F-70093	4
INSTR PIPING SCHEMATICS SH #1 INSTRUMENTATION	9321-F-70103	4
INSTR PIPING SCHEMATICS SH #2 INSTRUMENTATION	9321-F-70113	3
INSTR PIPING SCHEMATICS SH #3 INSTRUMENTATION	9321-F-70123	7
INSTR PIPING SCHEMATICS SH #4 INSTRUMENTATION	9321-F-70133	7

* PRINT

8.1 REFERENCE DRAWINGS (Cont'd)

TITLE	DRAWING NO.	REV.
INSTR PIPING SCHEMATICS SH #5 INSTRUMENTATION	9321-F-70143	8
INSTR PIPING SCHEMATICS SH #5 INSTRUMENTATION	9321-F-70153	4
CABLED TUBING ARRG'T SH #3 INSTRUMENTATION	9321-F-70163	4
LEVEL CONTROL PPG SH #1 INSTRUMENTATION	9321-F-70173	2
LEVEL CONTROL PPG SH #2 INSTRUMENTATION	9321-F-70183	5
PENET & LINER WELD JOINT CHANNEL PRESS PPG-INSTR	9321-F-70193	3
STM & WTR ANALYSIS SYS. SAMPLING DIA INSTRUMENTATION	9321-F-70203	4
STM & WTR ANALYSIS SYS. SAMPLE PPG SH #1 INSTRUMENTATION	9321-F-70213	2
EXTR. STM FREE FLOW REVERSE CURRENT VALVES CONTR. SYS	9321-F-70223	2
LOCAL MOUNTED INSTR. SUPPORT DETAILS INSTRUMENTATION	9321-F-70233	4
PRESSURE GAGE & SWITCH DETAILS INSTRUMENTATION	9321-F-70243	3
PRIM. PLANT INSTR. PPG & SUPPORTS SH #1 INSTRUMENTATION	9321-F-70253	6
PRIM. PLANT INSTR. PPG & SUPPORTS SH #2 INSTRUMENTATION	9321-F-70263	7
CONT BLDG INSTR. ARRG'T SH #1 INSTRUMENTATION	9321-F-70273	8
CONT BLDG INSTR. ARRG'T SH #2 INSTRUMENTATION	9321-F-70283	12
WASTE HOLD-UP PIT & NUC. TANK FARM ARRG'T INSTRUMENTATION	9321-F-70293	5
CABLED TUBING SCHEMATIC INSTRUMENTATION	9321-F-70303	3
AUX BOILER FEED PUMP ROOM INST PPG SH #1 INSTRUMENTATION	9321-F-70313	7
TRAVELING SCREENS DIFFERENTIAL LEVEL CONTROL SYS INSTRUMENTATION	9321-F-70323	3
PENET. & LINER WELD JOINT CHANNEL PRESS PPG SH #1 INSTRUMENTATION	9321-F-70333	7
PENET. & LINER WELD JOINT CHANNEL PRESS PPG SH #2 INSTRUMENTATION	9321-F-70343	5
PENET. & LINER WELD JOINT CHANNEL PRESS PPG SH #3 INSTRUMENTATION	9321-F-70353	5
LEVEL CONTROL PIPING SH #3 INSTRUMENTATION	9321-F-70373	2
LEVEL CONTROL PIPING SH #4 INSTRUMENTATION	9321-F-70383	6
PENET. & LINER WELD JOINT CHANNEL PRESS PPG SH #4 INSTRUMENTATION	9321-F-70393	7
PAB INSTR ARRG'T SH #1 INSTRUMENTATION	9321-F-70403	7
PAB INSTR ARRG'T SH #2 INSTRUMENTATION	9321-F-70413	5
PAB INSTR ARRG'T SH #3 INSTRUMENTATION	9321-F-70423	3
CONT BLDG PPG PENET TRENCH INSTR ARRG'T	9321-F-70433	5
STM & WTR ANALYSIS SYS SAMPLE PPG SH #2 INSTRUMENTATION	9321-F-70443	5
RADIATION MONITORING INSTALLATION DETAILS INSTRUMENTATION	9321-F-70453	8
LEVEL CONTROL PIPING SH #5 INSTRUMENTATION	9321-F-70463	5
VARIABLE WEIR CONTROL PPG ARRG'T INSTRUMENTATION	9321-F-70473	2
INSTR. PPG SCHEMATICS SH #7 INSTRUMENTATION	9321-F-70483	3
LEVEL CONTROL PIPING SH #6 INSTRUMENTATION	9321-F-70493	5
LEVEL CONTROL PIPING SH #7 INSTRUMENTATION	9321-F-70503	9
TRANSMITTER RACKS PPG ARRG'T SH #4 INSTRUMENTATION	9321-F-70513	4
PENET & LINER WELD JOINT CHANNEL PRESS PPG SH #5 INSTRUMENTATION	9321-F-70523	4

8.1 REFERENCE DRAWINGS (Cont'd)

TITLE	DRAWING NO.	REV.
AUX BOILER FEED PUMP ROOM INSTR PPG SH #2	9321-F-70533	8
TRANSMITTER RACKS PPG ARRG'T SH #5 INSTRUMENTATION	9321-F-70553	3
NUCLEAR PLANT CONTROL VALVE HOOK-UP DETAILS INSTRUMENTATION	9321-F-70563	7
PAB INSTR ARRG'T SH #4 INSTRUMENTATION	9321-F-70573	4
PAB INSTR ARRG'T SH #5 INSTRUMENTATION	9321-F-70583	6
CONT BLDG TEST PRIM SENSOR LOCATION INSTRUMENTATION	9321-F-70603	1
TRANSMITTER RACKS PPG ARRG'T SH #6 INSTRUMENTATION	9321-F-70613	2
STARTUP FEEDWTR BYPASS PIT RACK INSTRUMENTATION	9321-F-70623	1
CONT BLDG INSTR ARRG'T SH #1 INSTRUMENTATION	9321-F-70633	1
CONT BLDG INSTR ARRG'T SH #2 INSTRUMENTATION	9321-F-70643	1
AUX BOILER FEED PUMP ROOM INSTR PPG-SH #2 INSTRUMENTATION	9321-F-70653	1
RAD MONITORING INSTALLATION DETAILS-IODINE 131 MONITOR INSTRUMENTATION	9321-F-70683	2
PAB G.A. ELEV 55'-0 INSTRUMENTATION	9321-F-70693	1
FUEL STORAGE BLDG G.A. INSTRUMENTATION	9321-F-70703	1
STM GENERATOR BLOWDOWN SAMPLE PANEL INSTRUMENTATION	9321-F-70713	1
EQUIPMENT ARRG'T CONTROL BLDG-SH #1 INSTRUMENTATION	9321-F-70723	1
CONDUIT LAYOUT LEAK RATE TEST CONT. BLDG.	9321-F-31393	4
CABLE ARRG'T REACTOR HEAD SH #2	9321-F-31433	1
CONDUIT DETAILS MANHOLES 37	9321-F-31463	2
CONDUIT DETAILS MANHOLES 38	9321-F-31623	2
LHTG & TRAY PLANS & SECT BRIDGE EL 53'-0 CONN UNITS	9321-F-31613	17
CABLE ARRG'T REACTOR HEAD SH #3	9321-F-32453	1
CONDUIT LAYOUT FOR 480V SWITCHGEAR CONTROL CABLES	9321-F-32793	2
CONDUIT LAYOUT RADIATION SHIELD DOORS PAB STOR AREA	9321-F-32803	6
CONDUIT LAYOUT CONTROL ROOM AIR CONDITIONING	9321-F-32673	2
	9321-F-32693	
	9321-F-31623	
	9321-F-32733	
	9321-F-32673	13
CONDUIT LAYOUT AUX BOILER FEED PUMP AREA SH #1	9321-F-31003	17
WIRING DIAG-118V. AC INSTR BUS PNL 31 & 32	9321-F-31993	21
WIRING DIAG-118V. AC INSTR BUS PNL 33 & 34	9321-F-32003	16
WIRING DIAG DIESEL GEN'S 31-32-33	9321-F-32203	9
WIRING DIAG 125V DC DISTRIBUTION PNL 31,32,33,34	9321-F-32073	26
CNTL BLDG EL 15'0 AIR CONDG EQUIP RM PLNS	9321-F-40173	3
CONDUIT LAYOUT DIESEL GEN BLDG	9321-F-32703	2
BATTERY NO. 33 ARRG'T & DETS	9321-F-32733	2
CONDUIT CONN SCH. CONTROL CONDUITS FOR 480V S.G.	9321-F-32783	9
TERMINAL BOX XEI ROD CONTROL LEADS	9321-F-32813	1
TERMINAL BOX XD9 ROD CONTROL LEADS	9321-F-32823	1
CONDUIT & TRAY CONN SCH CNTRL BLDG SH NO. 1	9321-F-32883	20
CONDUIT & TRAY CONN SCH CNTRL BLDG SH NO. 2	9321-F-32893	16

8.1 REFERENCE DRAWINGS (Cont'd)

TITLE	DRAWING NO.	REV.
CONDUIT LAYOUT TURBO-GEN & HTR BAY EL 36'-9	9321-F30713	13
CONDUIT LAYOUT TURBO-GEN & HTR BAY EXT SH 1	9321-F30683	14
CONDUIT LAYOUT TURBO-GEN & HTR BAY EXT SH 2	9321-F30693	13
CONDUIT LAYOUT TURBO-GEN & HTR BAY EXT SH 3	9321-F30703	18
CONDUIT LAYOUT FUEL STORAGE BUILDING	9321-F-30803	5
CONDUIT LAYOUT & DET'S CATHODIC PROT. INTAKE STR.	9321-F-30873	2
CHLORINATION-ARRG'T & CONDUIT LAYOUT	9321-F-30883	15
CONDUIT LAYOUT INTAKE STRUCTURE SH #3	9321-F-30903	8
CONDUIT DETAILS SH #4	9321-F-30913	5
CONTROL ROOM OPERATING DESK	9321-F-30923	5
CONDUIT DETAILS SH #1	9321-F-30933	11
CONDUIT DETAILS MANHOLES NO. 31 & 32	9321-F-30943	8
CONDUIT DETAILS SH #2	9321-F-30953	8
CONDUIT DETAILS SH #3	9321-F-30963	1
CONDUIT DETAILS LAYOUT INTAKE STRUCTURE SH #2	9321-F-30983	11
CONDUIT LAYOUT WASTE HOLD-UP TANK PIT	9321-F-31023	9
CONDUIT LAYOUT FUEL TRANSFER SYS FUEL STORAGE & V.C.	9321-F-31063	6
CONDUIT LAYOUT TRANSFER YARD AREA	9321-F-31073	9
CONTROL BLDG LOC OF SLEEVES & OPNGS SH #1	9321-F-31103	20
CONTROL BLDG LOC OF SLEEVES & OPNGS SH #2	9321-F-31113	17
CONDUIT DET MANHOLES 35 & 36	9321-F-31123	7
CONDUIT DET MANHOLES 34	9321-F-31153	7
CONDUIT DET MANHOLES 31A, 31B & 33	9321-F-31203	2
CONDUIT & TRAY CONN SCH CONTROL BLDG SHT NO. 3	9321-F-32903	15
CONDUIT & TRAY CONN SCH TURBO GEN. BLDG EL 15'-0 SH 1	9321-F-33273	13
CONDUIT & TRAY CONN SCH TURBO GEN. BLDG EL 36'-9 SH 3	9321-F-33293	17
CONDUIT & TRAY CONN SCH TURBO GEN. BLDG EL 15'-0 SH 2	9321-F-33283	17
CONT BLDG-COMP PPG OUTSIDE REFUELING CANAL WALLS SHT NO. 1	9321-F-25303	
CONT BLDG-COMP PPG OUTSIDE REFUELING CANAL WALLS SHT NO. 2	9321-F-25313	
INTAKE STRUCTURE CHLORINATION PPG SHT NO. 1	9321-F-21103	3
INTAKE STRUCTURE CHLORINATION PPG SHT NO. 2	9321-F-21113	3
T/B HTR BAY ARRG'T	9321-F-21173	1
T/B HTR BAY REHTR BALANCE LINE PPG (VOID)	9321-F-21193	3
AUX FEED PMP BLDG TURB. SUPPLY & EXHAUST PPG	9321-F-21253	7
T/B & AUX FEED PUMP BLDG	9321-F-21283	7
T/B YARD AREA MS SYS TRAP PPG SHT NO. 1	9321-F-21293	6
T/B YARD AREA MS SYS TRAP PPG SHT NO. 2	9321-F-21303	4
T/B YARD AREA MS SYS TRAP PPG SHT NO. 3	9321-F-21313	5
T/B YARD AREA MS SYS TRAP PPG SHT NO. 4	9321-F-21323	3
T/B HTR BAY TURB OIL CONDITIONING SHT NO. 1	9321-F-21333	6
T/B HTR BAY TURB OIL CONDITIONING SHT NO. 2	9321-F-21343	4
HTR BAY FLASH EVAP. PPG SHT NO. 1	9321-F-21353	10
HTR BAY FLASH EVAP. PPG SHT NO. 2	9321-F-21363	7
T/B HTR BAY & YARD AREA SAFETY VALVE DRN PPG	9321-F-21373	6
T/B HTR BAY MISCELLANEOUS PPG SHT NO. 1	9321-F-21383	6
T/B HTR BAY MISCELLANEOUS PPG SHT NO. 2	9321-F-21393	8
T/B HTR BAY MOISTURE SEPAR DRN TK'S	9321-F-21413	2
T/B HTR BAY PPG BELOW FL EL 15'-0"	9321-F-21453	14
T/B & YARD AREA FLASH EVAP PPG	9321-F-21473	9
YARD AREA WEST OF CONT. COMP. PPG	9321-F-21493	2

8.1 REFERENCE DRAWINGS (Cont'd)

TITLE	DRAWING NO.	REV.
T/B HTR BAY EXTRACTION STM SYS-TRAP PPG SHT NO. 1	9321-F-21503	5
T/B HTR BAY EXTRACTION STM SYS-TRAP PPG SHT NO. 2	9321-F-21513	5
HTR BAY HD TK CLOSED CLG SYS	9321-F-21723	2
T/B HTR BAY EXTRACTION STM PPG EL-SHT NO. 4	9321-F-20713	5
T/B HTR BAY EXTRACTION STM PPG EL-SHT NO. 5	9321-F-20723	5
T/B HTR BAY H.P. TURB	9321-F-20743	6
T/B HTR BAY HTR DRN'S & VENTS PPG-SHT NO. 1	9321-F-20753	12
T/B HTR BAY HTR DRN'S & VENTS PPG-SHT NO. 2	9321-F-20763	8
T/B HTR BAY HTR DRN'S & VENTS PPG-SHT NO. 3	9321-F-20773	4
T/B HTR BAY HTR DRN'S & VENTS PPG-SHT NO. 4	9321-F-20783	9
T/B HTR BAY HTR DRN'S & VENTS PPG-SHT NO. 5	9321-F-20793	7
T/B HTR BAY HTR DRN'S & VENTS PPG-SHT NO. 6	9321-F-20803	9
T/B HTR BAY HTR DRN'S & VENTS PPG-SHT NO. 7	9321-F-20813	11
T/B HTR BAY-TURB OIL DRN & VENT PPG	9321-F-20833	3
T/B HTR BAY-COMPOSITE	9321-F-20843	2
T/B HTR BAY HTR DRN'S & VENTS PPG-SHT NO. 8	9321-F-20863	6
T/B HTR BAY WTR BOX PRIMING PPG SHT NO. 1	9321-F-20873	6
T/B HTR BAY WTR BOX PRIMING PPG SHT NO. 2	9321-F-20883	7
T/B HTR BAY HTR DRN TK OUTLINE DWG	9321-F-20903	3
T/B HTR BAY COND AIR REMOVAL PPG PLAN SHT NO. 1	9321-F-20913	7
T/B HTR BAY COND AIR REMOVAL PPG PLAN SHT NO. 2	9321-F-20923	7
T/B HTR BAY PRIMING SYSTEM PPG	9321-F-20933	5
YARD AREA S.J.A.E. BLOWER VENT PPG	9321-F-20963	5
T/B HTR BAY-PPG THRU COND NECK	9321-F-22333	2
T/B HTR BAY-BFP TURB EXHAUST STM PPG	9321-F-22253	2
TRANSF. COMP PPG UNDERGROUND	9321-F-22363	11
T/B HTR BAY-TUNNEL VENT PPG	9321-F-22533	5
AUX FEED PMP BLDG ADD. TO CHEM. FEED	9321-F-22543	3
YARD AREA & AUX. B.F. PUMP BLDG.	9321-F-22553	1
CONTR BLDG HD TK CLOSED CLG SYS	9321-F-22563	2
YARD AREA COND. PPG SHT NO. 1	9321-F-22873	7
YARD AREA COND. PPG SHT NO. 2	9321-F-22883	6
RESTRAINT & SUPPORT DESIGN STD PROCEDURES	9321-F-50003	3
CONT BLDG RESTRAINT & SUPPORT DESIGN LINE 71	9321-F-51313	6
PRIMARY AUX BLDG RESTRAINT & SUPPORT DESIGN	9321-F-52593	1
CONT. BLDG RESTRAINT & SUPPORT DESIGN LINE 70	9321-F-55173	6
FAN HOUSE & PIPE PENETRATION AREA PLANS	9321-F-13933	2
T/B TURB CRANE RUNWAY & HTR BAY ROOF PLAN	9321-F-13713	4
T/B OPER FL EL. 53'-0 LAYDOWN PLAN FOR DISMANTLED UNIT	9321-F-13773	3
T/B MAIN ROOF PLAN	9321-F-13783	4
T/B DOOR SCHEDULE & MISC DETAILS	9321-F-13793	5
ELEC PENETR TUNNEL & PERSONNEL ENTR SHIELDING BLDG	9321-F-13853	2
FAN HOUSE & PIPE PENETR. AREA SECT & DETAILS	9321-F-13993	2
REACTOR COOLANT SYS BOUNDARY CHK VALVE TESTING SHT NO. 2	9321-F-28073	1
REACTOR COOLANT SYS BOUNDARY CHK VALVE TESTING SHT NO. 3	9321-F-28083	1

8.1 REFERENCE DRAWINGS (Cont'd)

TITLE	DRAWING NO.	REV.
T/B, HTR BAY & CONTR BLDG ROOF DRNS PLANS	9321-F-40013	4
T/B, HTR BAY & CONTR BLDG ROOF DRNS SECT & DETAILS	9321-F-40023	4
T/B, HTR BAY FLOOR AND HUB DRNS PLAN EL 15'-0"	9321-F-40033	6
T/B, HTR BAY FLOOR AND HUB DRNS PLAN EL 36'-0" SECT & DET.	9321-F-40043	3
T/B FIRE PROTECTION-STANDPIPE PLANS	9321-F-40083	5
T/B FIRE PROTECTION-STANDPIPE SECT. & DET.	9321-F-40093	6
T/B FIRE PROTECTION-STANDPIPE SECTIONS	9321-F-40103	7
MISC DRN PLT AREA PLANS, SECT'S & DET's	9321-F-40113	9
CONTR & DIESEL GEN. BLDG'S DOOR OPENING DET'S & SCH.	9321-F-13823	5
FAN HOUSE & PIPE PENETRATION AREA PLAN AT 54'-0 & 67'-6	9321-F-13943	1
FAN HOUSE & PIPE PENETRATION AREA SECT'S & DET'S-SHT NO. 1	9321-F-13963	1

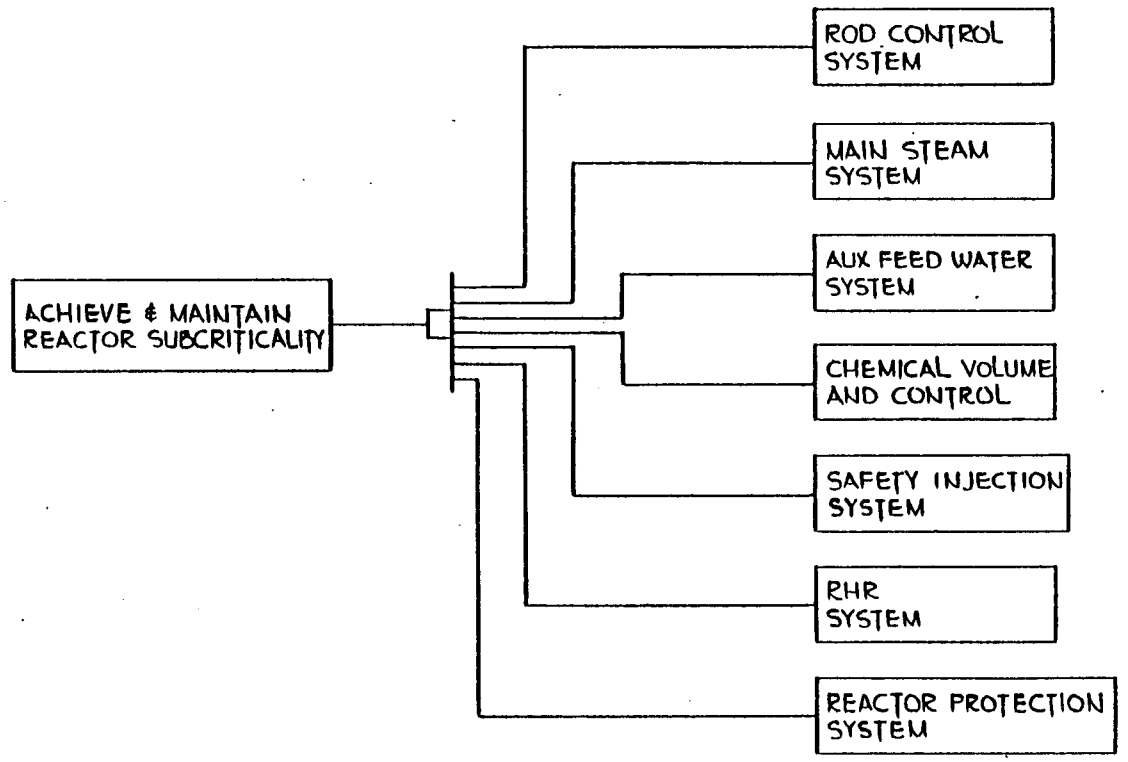

EBASCO SERVICES INCORPORATED		POWER AUTHORITY STATE OF NEW YORK INDIAN POINT NO. 3 NUCLEAR POWE PLANT SYSTEM INTERACTION STUDY LOGIC DIAGRAM	REV. 0 5209.003 SH 1 OF 4
DIV. MECH DR. KEJ CH. AF DATE 7/13/82	APPROVED 10 Gerwald 10.1.82 10/1/82		

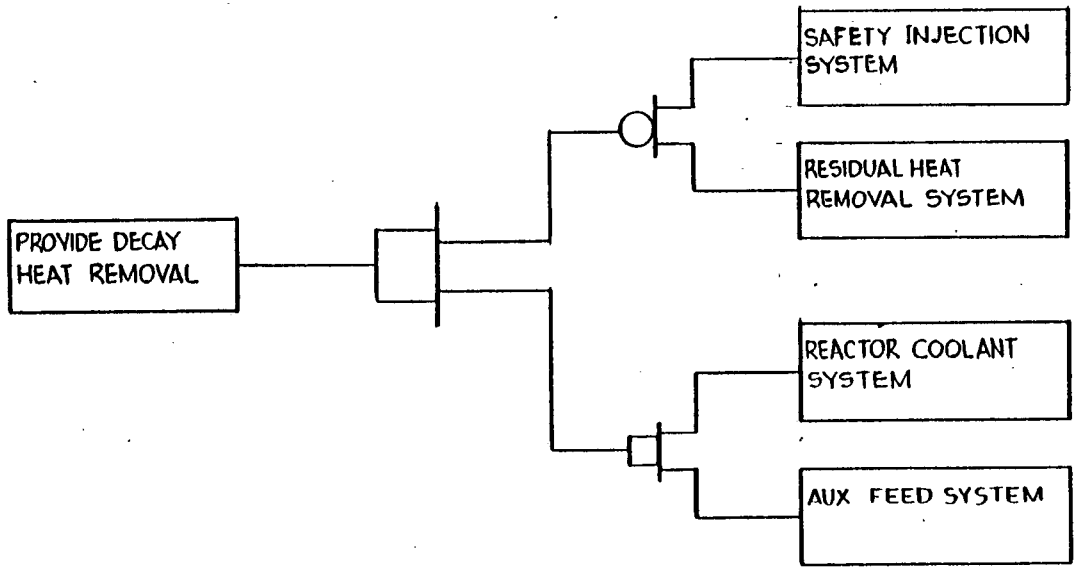

EBASCO SERVICES INCORPORATED		POWER AUTHORITY STATE OF NEW YORK INDIAN POINT NO. 3 NUCLEAR POWER PLANT SYSTEM INTERACTION STUDY LOGIC DIAGRAM	REV. 0 5209.003 SH 2 OF 4
DIV. MECH DR. AF CH. KJ DATE 7-15-82	APPROVED W Grunwald 10-1-82 KM (MD) JPR		

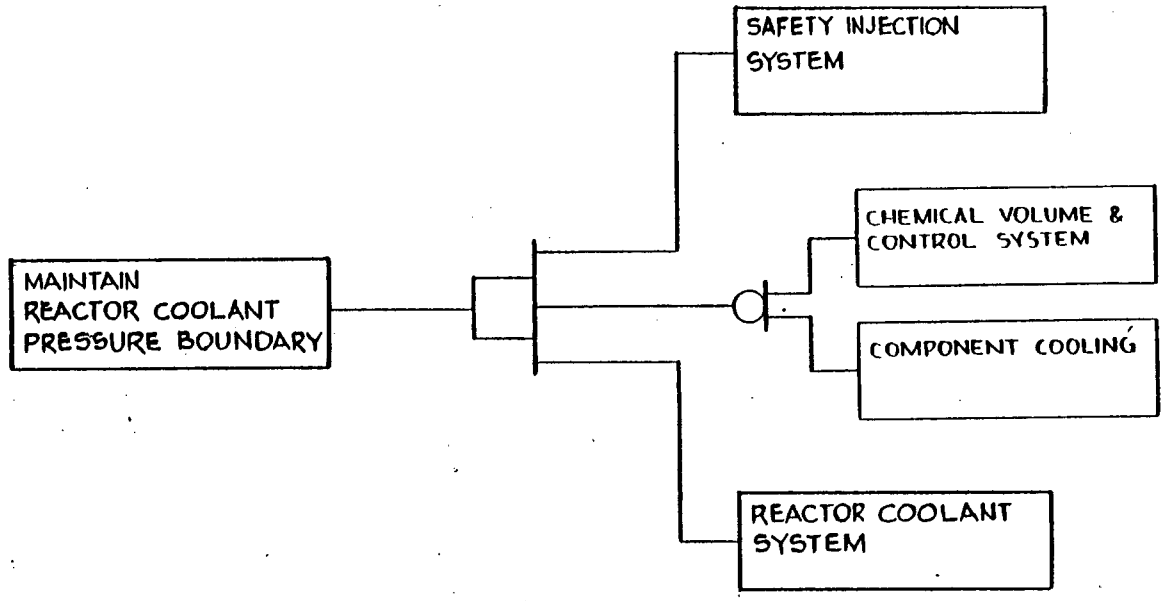

EBASCO SERVICES INCORPORATED DIV. MECH DR. AF CH. KJ DATE 7-22-82	APPROVED W Grinswold 10-1-82 CHM DHD SPR	POWER AUTHORITY OF STATE NEW YORK INDIAN POINT NO 3 NUCLEAR POWER PLANT SYSTEM INTERACTION STUDY LOGIC DIAGRAM	5209.003 SH 3 OF 4

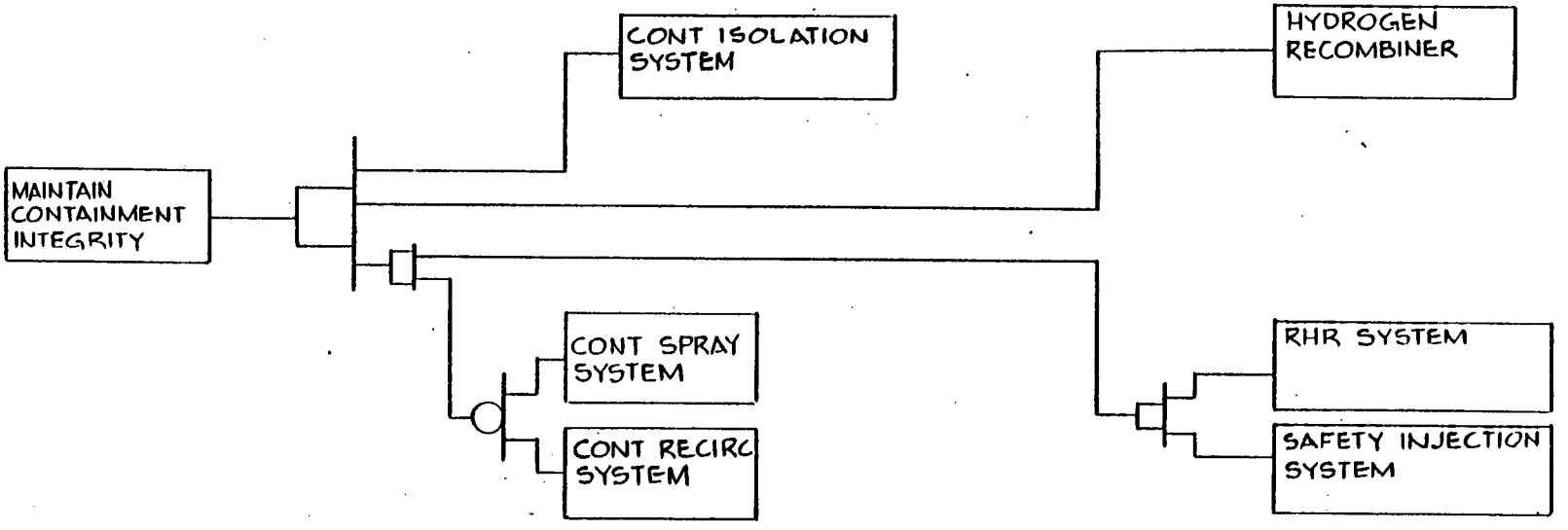

EBASCO SERVICES INCORPORATED		POWER AUTHORITY OF STATE NEW YORK INDIAN POINT NO.3 NUCLEAR POWER PLANT SYSTEM INTERACTION STUDY LOGIC DIAGRAM	5209.003 SH 4 OF 4
DIV. MECH DR. AF CH. KJ DATE 7-22-82	APPROVED W Griswold 10-1-82 DHD XPR		

GOAL	REQUIRED FUNCTION	SYSTEM/PROCESS	REMARKS
ACHIEVE & MAINTAIN REACTOR SUBCRITICALITY	A) UNIT TRIP	1.) REACTOR PROTECTION SYSTEM 2.) ROD CONTROL SYSTEM	-PROVIDES SENSING AND ACTUATION SIGNAL -DROPS CONTROL RODS
	B.) PRESSURE CONTROL	1.) REACTOR COOLANT SYSTEM 2.) CHEMICAL VOLUME & CONTROL SYSTEM	-PRESSURIZER POWER OPERATED RELIEF VALVES LIMIT ANY PRESSURE EXCURSION -LETDOWN (NO RCS OR SECONDARY SYSTEM LINE BREAKS) -PRESSURIZER AUXILIARY SPRAY (NO RCS BREAKS)
	C.) LEVEL CONTROL	1.) CHEMICAL VOLUME & CONTROL SYSTEM 2.) SAFETY INJECTION SYSTEM 3.) RESIDUAL HEAT REMOVAL SYS. 4.) REACTOR COOLANT SYSTEM	-MAKEUP VIA CHARGING LINES (NO RCS OR SECONDARY SYSTEM LINE BREAKS) -3 OF 4 ACCUMULATORS (LARGE LOCA) -2 OF 3 HIGH PRESSURE PUMPS (MEDIUM LOCA) -1 OF 3 HIGH PRESSURE PUMPS (SMALL LOCA OR SECONDARY SYSTEM BREAK) -1 OF 2 RHR PUMPS (LARGE LOCA) -FLOW PATH FOR MAKEUP WATER
	D) REMOVE HEAT	1.) REACTOR COOLANT SYSTEM 2) AUXILIARY FEEDWATER SYSTEM 3) MAIN STEAM SYSTEM	-NATURAL CIRCULATION -1 OF 3 PUMPS TO 2 OF 4 S/G'S (LOSS OF NORMAL FW) REQUIRES POWER OPERATED ATMOSPHERIC RELIEF VALVES. -POWER OPERATED ATMOSPHERIC RELIEF VALVES USED IN CONJUNCTION WITH AUX FEEDWATER
	E) CHEMICAL ADDITION	1.) CHEMICAL VOLUME & CONTROL SYSTEM 2.) SAFETY INJECTION SYSTEM	-BLEED & FEED (CHEMICAL REACTIVITY CONTROL - NORMAL SHUTDOWN) -INJECTION OF BORON (CHEMICAL REACTIVITY CONTROL - RCS OR SECONDARY SYSTEM BREAKS)

EBASCO SERVICES INCORPORATED DIV. MECH DR. KEJ CH. AF DATE 3/82 APPROVED wgnsweld 10.1.82	POWER AUTHORITY STATE OF NEW YORK INDIAN POINT NO 3. NPP FUNCTIONAL TABLE	5209.003 SH 1 OF 4

GOAL	REQUIRED FUNCTION	SYSTEM / PROCESS	REMARKS
MAINTAIN CONTAINMENT INTEGRITY	A) ISOLATE CONTAINMENT	1) CONTAINMENT ISOLATION SYS.	-OUTBOARD ISOLATION VALVES OR, -INBOARD ISOLATION VALVES OR CLOSED SYSTEM INSIDE CONTAINMENT
	B) REDUCE CONTAINMENT PRESSURE & TEMPERATURE	1) CONTAINMENT SPRAY SYSTEM OR CONTAINMENT RECIRCULATION SYSTEM 2) RHR SYSTEM AND/OR SAFETY INJECTION SYSTEM	-1 OF 2 CS PUMPS & 3 OF 5 FAN COOLERS OR, -2 OF 2 CS PUMPS OR, -5 OF 5 FAN COOLERS -RECIRCULATE SPRAY AND RUPTURE LIQUID AFTER EMPTYING THE RWST -1 OF 2 RECIRC PUMPS OR 1 OF 2 RHR PUMPS -1 OF 3 HIGH PRESSURE PUMPS (LARGE LOCA ONLY)
	C) DILUTE HYDROGEN	1) HYDROGEN RECOMBINER	-1 OF 2 RECOMBINERS

EBASCO SERVICES INCORPORATED		POWER AUTHORITY STATE OF NEW YORK INDIAN POINT NO 3 NPP FUNCTIONAL TABLE	5209.003 SH 2 OF 4
DIV. MECH DR. KEJ CH. AF DATE 9-82	APPROVED WGrts wold 10-1-82 RA PRS ZPR		

GOAL	REQUIRED FUNCTION	SYSTEM/PROCESS	REMARKS
REMOVE DECAY HEAT	A) MAINTAIN CIRCULATION THROUGH AND COOLING OF THE REACTOR	1.) SAFETY INJECTION SYSTEM 2.) RESIDUAL HEAT REMOVAL SYS.	-1 OF 2 RECIRCULATION PUMPS OR, -1 OF 2 RHR PUMPS AND -1 OF 2 RHR HEAT EXCHANGERS

EBASCO SERVICES INCORPORATED		POWER AUTHORITY STATE OF NEW YORK INDIAN POINT NO. 3 NPP FUNCTIONAL TABLE	5209.003 SH 3 OF 4
DIV. MECH DR. KGJ CH. AF DATE 9-82	APPROVED W Griswold 10-1-82		

GOAL	REQUIRED FUNCTION	SYSTEM/PROCESS	REMARKS
MAINTAIN REACTOR COOLANT PRESSURE BOUNDARY	A) PREVENT OVERPRESSURE	1) REACTOR COOLANT SYSTEM	-POWER OPERATED RELIEF VALVES PCV 455C OR 456 -PRESSURIZER CODE SAFETY VALVES
	B) ISOLATE ANY LINE RUPTURE OR LEAKAGE	1) SAFETY INJECTION SYSTEM 2) CHEMICAL VOLUME & CONTROL SYSTEM 3) REACTOR COOLANT SYSTEM	-CHARGING LINE CHECK VALVES -AUX SPRAY CHECK VALVE -EXCESS LETDOWN ISOLATION VALVES 213A & 213B -LETDOWN ISOLATION VALVES LCV-459 & LCV-460 -CHECK VALVES ON SAFETY INJECTION LINES -POWER OPERATED RELIEF VALVES PCV-455C OR 456 -PRESSURIZER CODE SAFETY VALVES
	C) SEAL REACTOR COOLANT PUMP	1) CHEMICAL VOLUME & CONTROL SYSTEM 2) COMPONENT COOLING	-SEAL WATER INJECTION -MAINTAIN INTEGRITY OF RCP SEALS -

EBASCO SERVICES INCORPORATED DIV. MECH DR. KEJ CH. AF DATE 9-82 APPROVED wgmswold 10-1-82	POWER AUTHORITY STATE OF NEW YORK INDIAN POINT NO. 3 NPP FUNCTIONAL TABLE	5209.003 SH 4 OF 4

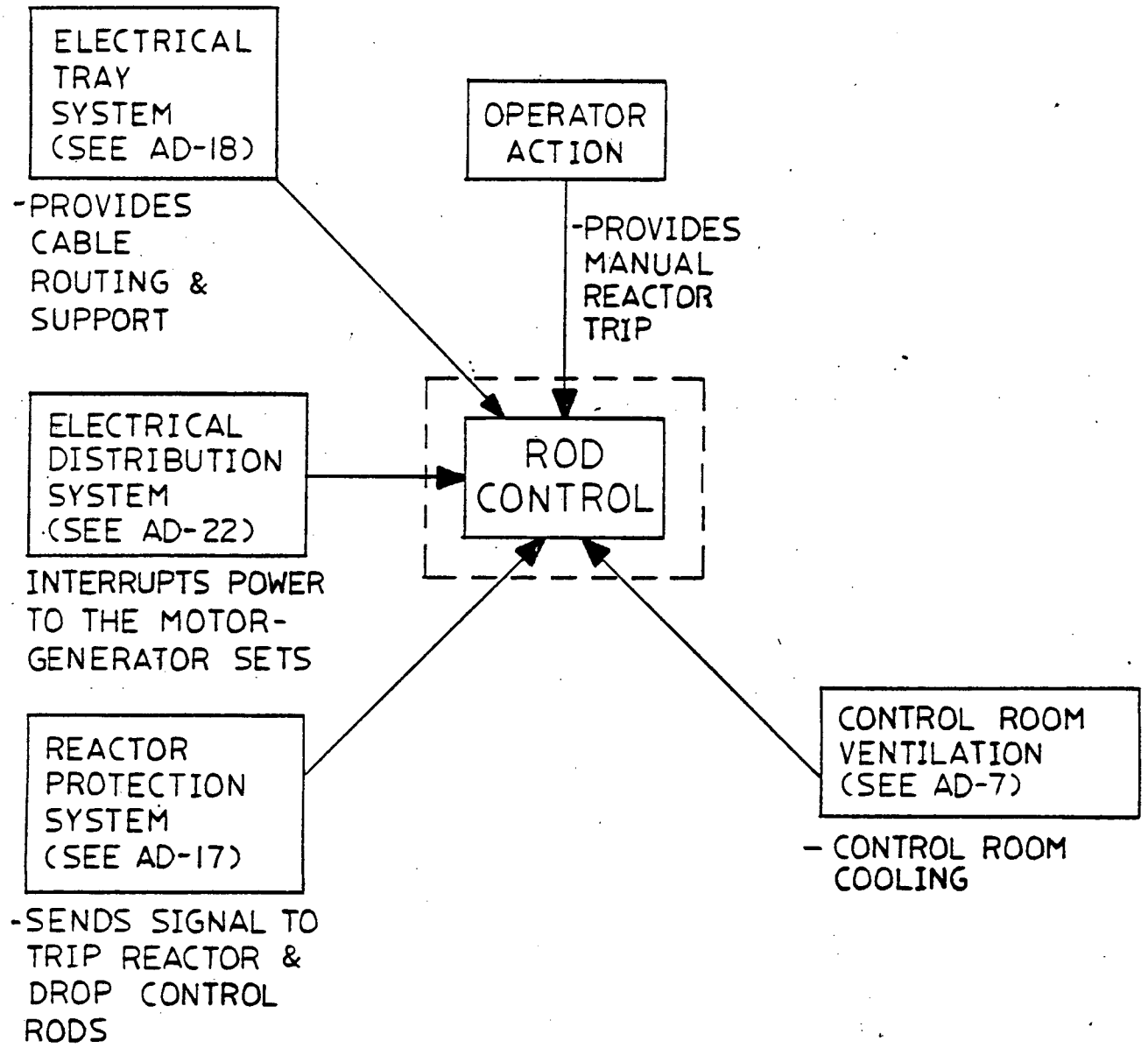

EBASCO SERVICES INCORPORATED	POWER AUTHORITY STATE OF NEW YORK INDIAN POINT NO 3 NPP ROD CONTROL SYSTEM AUXILIARY DIAGRAM	AD-1
DIV. MECH DR. KEJ DATE 9/82 CH. AF SCALE NONE	APPROVED W Gatsmold 10.1.82 JEM UMD JPR	

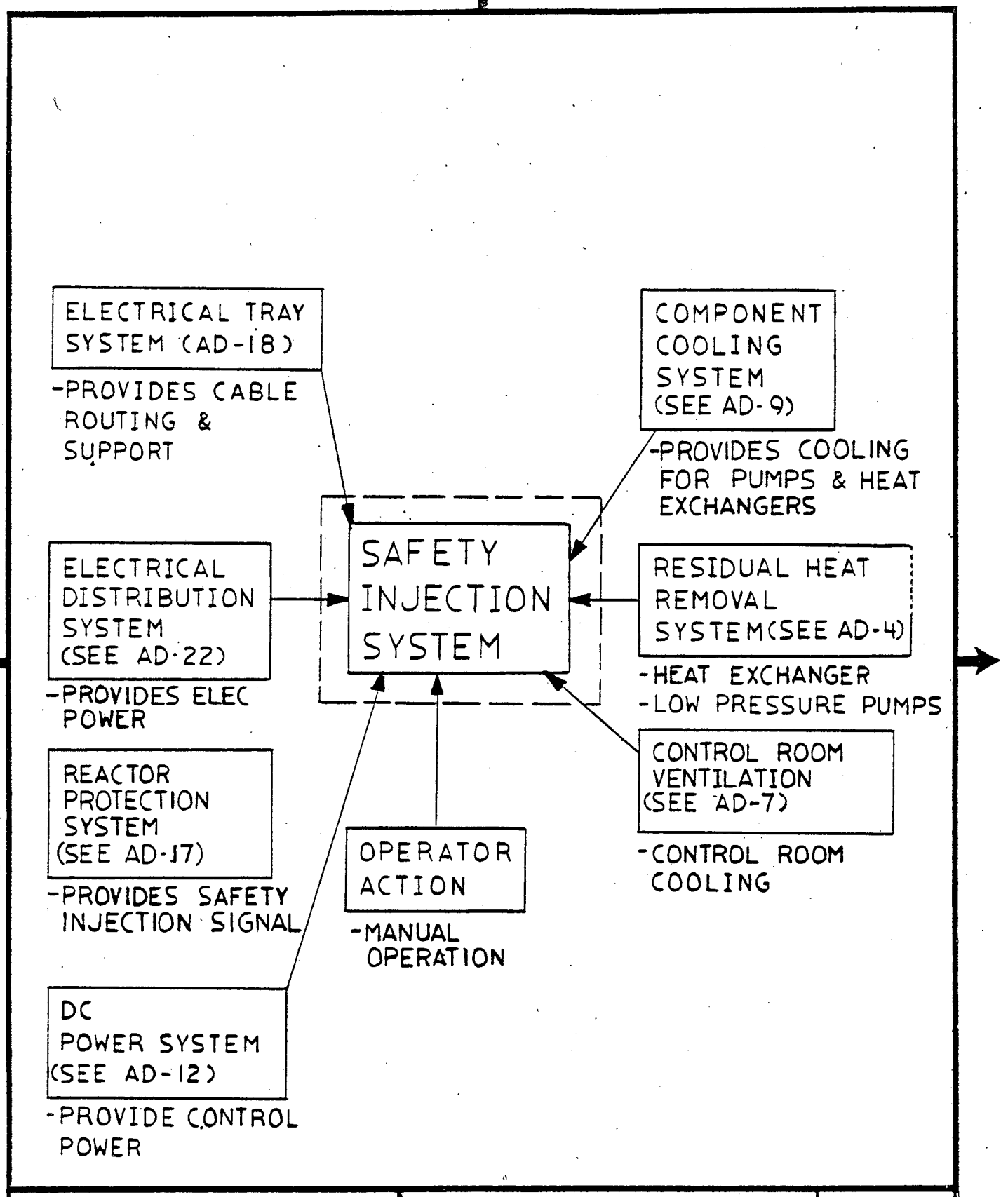

EBASCO SERVICES INCORPORATED	POWER AUTHORITY STATE OF NEW YORK INDIAN POINT NO.3 N.P.P. SAFETY INJECTION SYSTEM AUXILIARY DIAGRAM	AD-2
DIV. MECH DR. V.Z. DATE 9-82 CH. AF SCALE NONE	APPROVED W Garnswald 10-1-82 JJM TMD EPR	

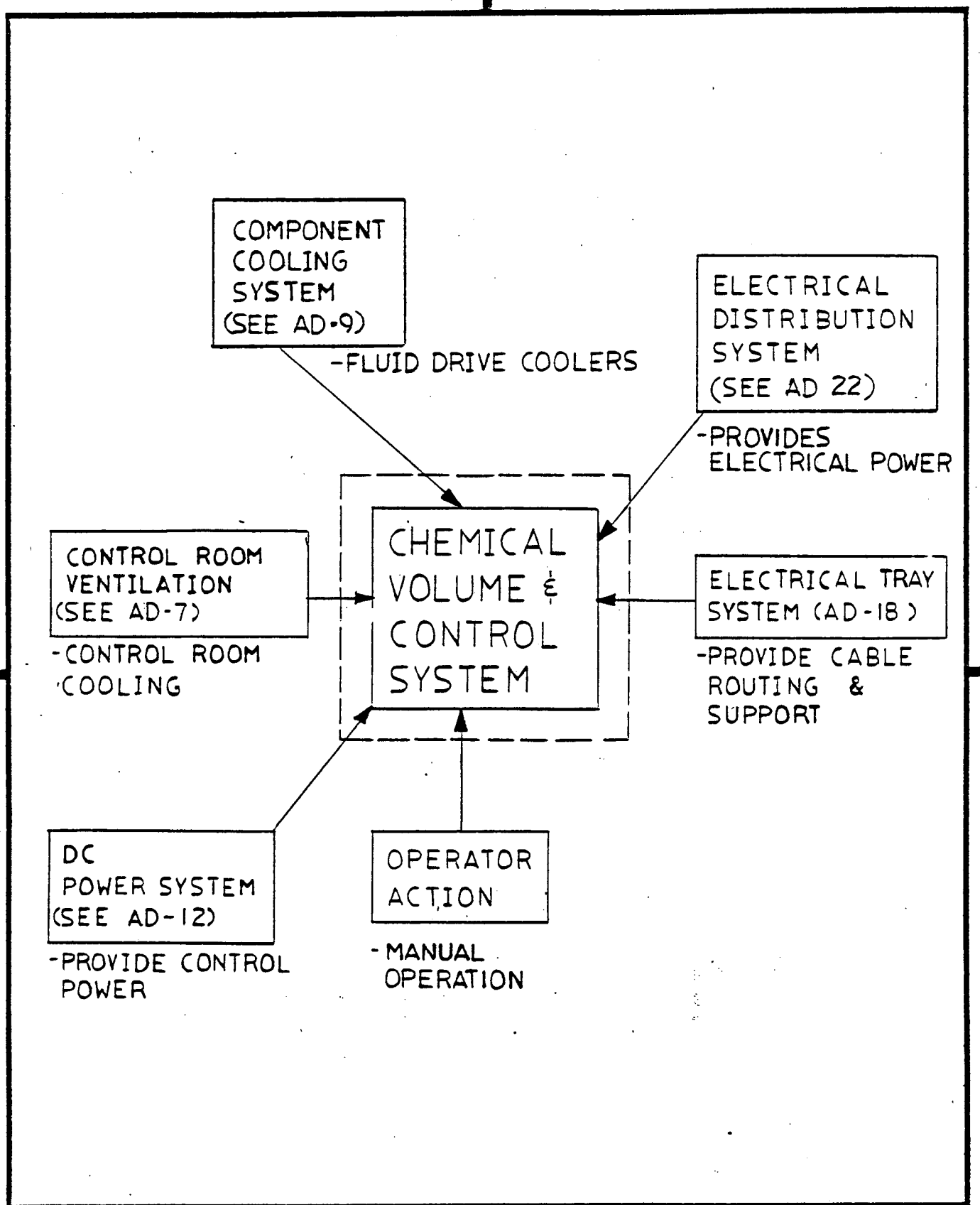

EBASCO SERVICES INCORPORATED	POWER AUTHORITY STATE OF NEW YORK INDIAN POINT NO. 3 N.P.P. CHEMICAL & VOLUME CONTROL SYSTEM AUXILIARY DIAGRAM	AD-3
DIV. MECH DR. V.Z. DATE 9-82 CH AF SCALE NONE	APPROVED W Amswold 10-1-82 YSM (WM) EPR	

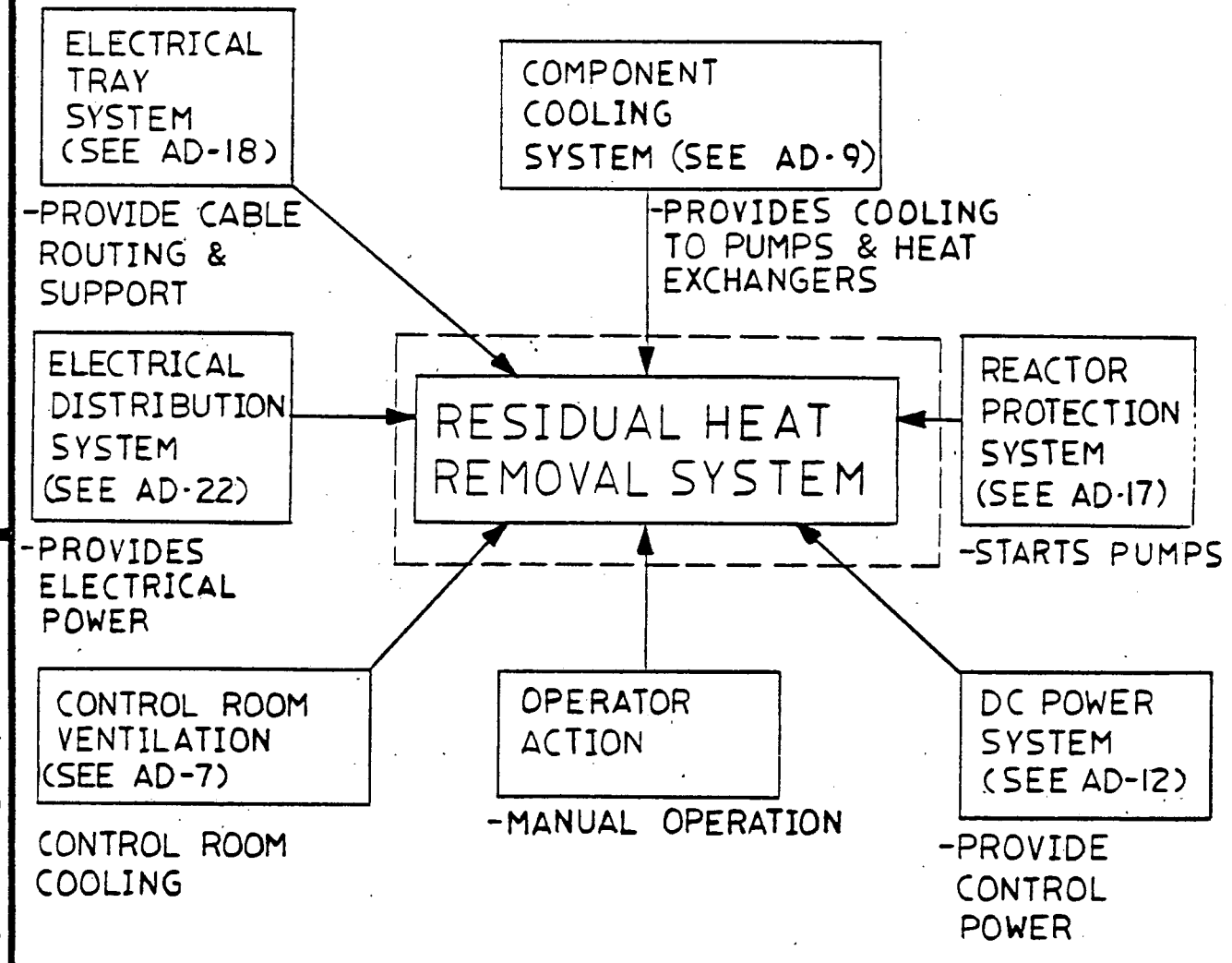

EBASCO SERVICES INCORPORATED	POWER AUTHORITY STATE OF NEW YORK INDIAN POINT NO.3 N.P.P. RESIDUAL HEAT REMOVAL STUDY AUXILIARY DIAGRAM	AD-4
DIV. MECH DR. V.Z. DATE 9 8/L CH. AF SCALE NONE APPROVED		

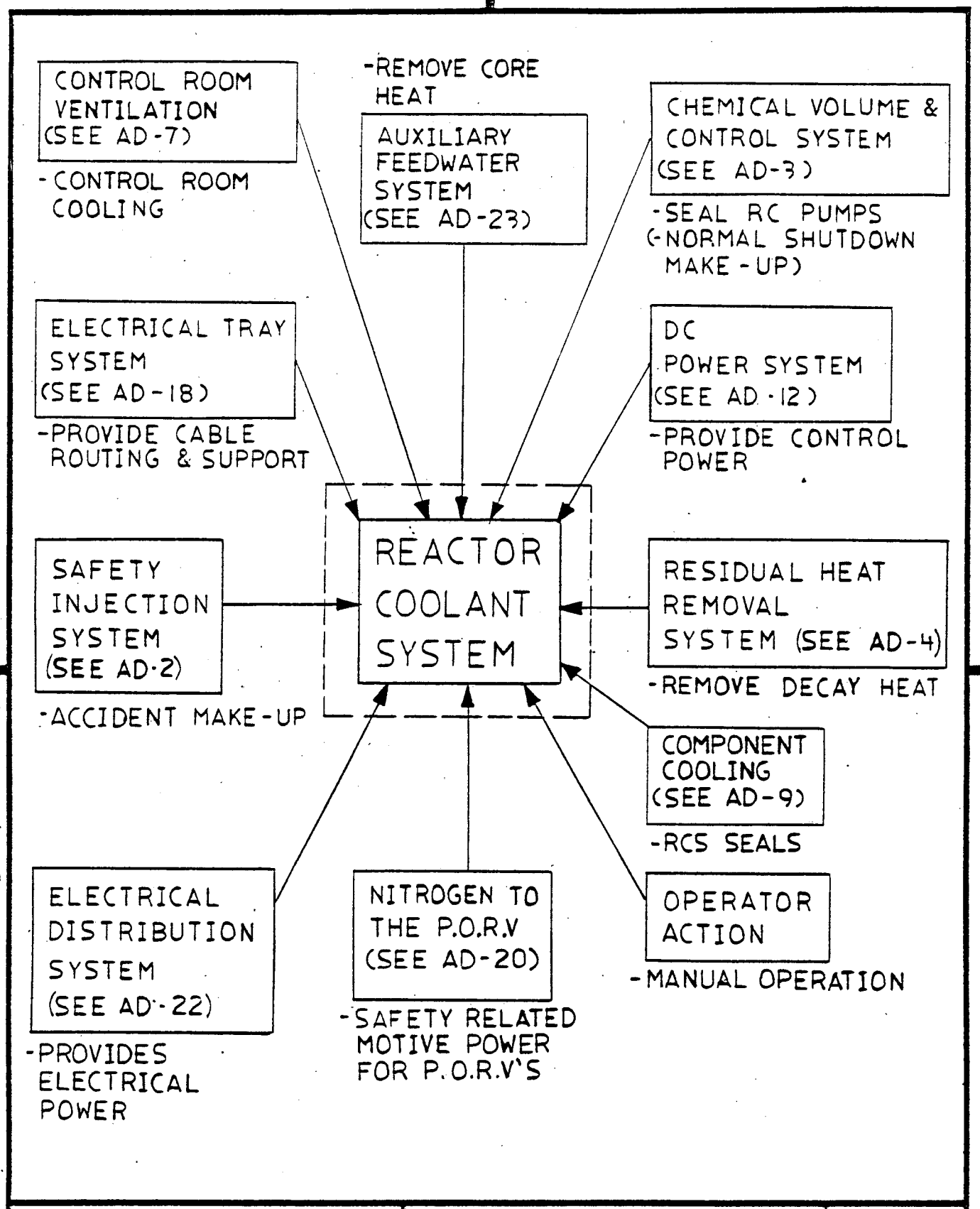

EBASCO SERVICES INCORPORATED	POWER AUTHORITY STATE OF NEW YORK INDIAN POINT NO.3 N.P.P. REACTOR COOLANT SYSTEM AUXILIARY DIAGRAM	AD-5
DIV. MECH DR. V.Z. DATE 9-82 CH. AF SCALE NONE APPROVED W Grinsmold 10-1-82 J.F.M. | DMD | E.P.R.		

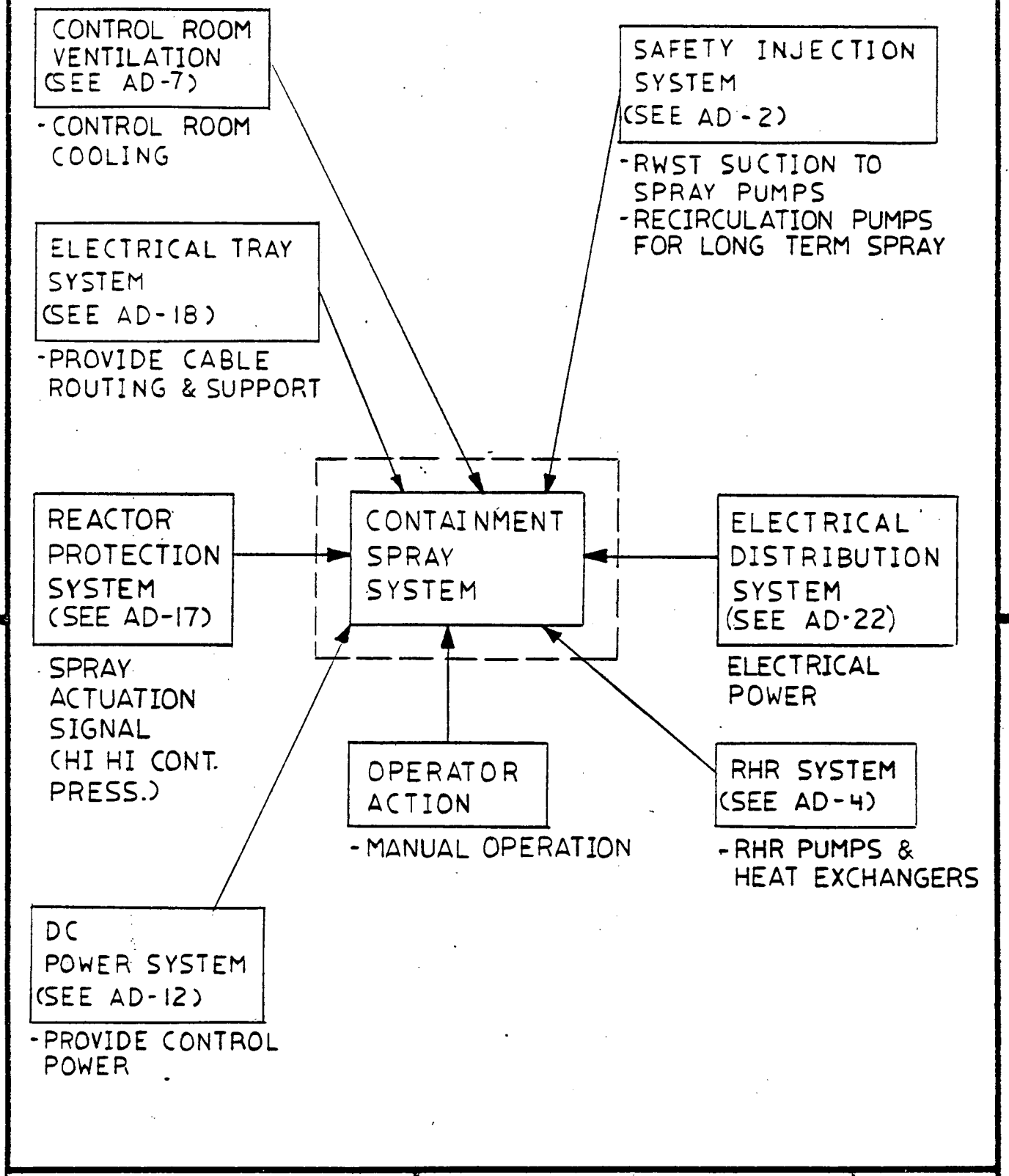

EBASCO SERVICES INCORPORATED DIV. MECH DR. V.Z. DATE 9-8-82 CH. AF SCALE NONE	APPROVED W Griswold 10-1-82 RJM LMD SPR	POWER AUTHORITY STATE OF NEW YORK INDIAN POINT NO.3 N.P.P. CONTAINMENT SPRAY SYSTEM AUXILIARY DIAGRAM	AD-6

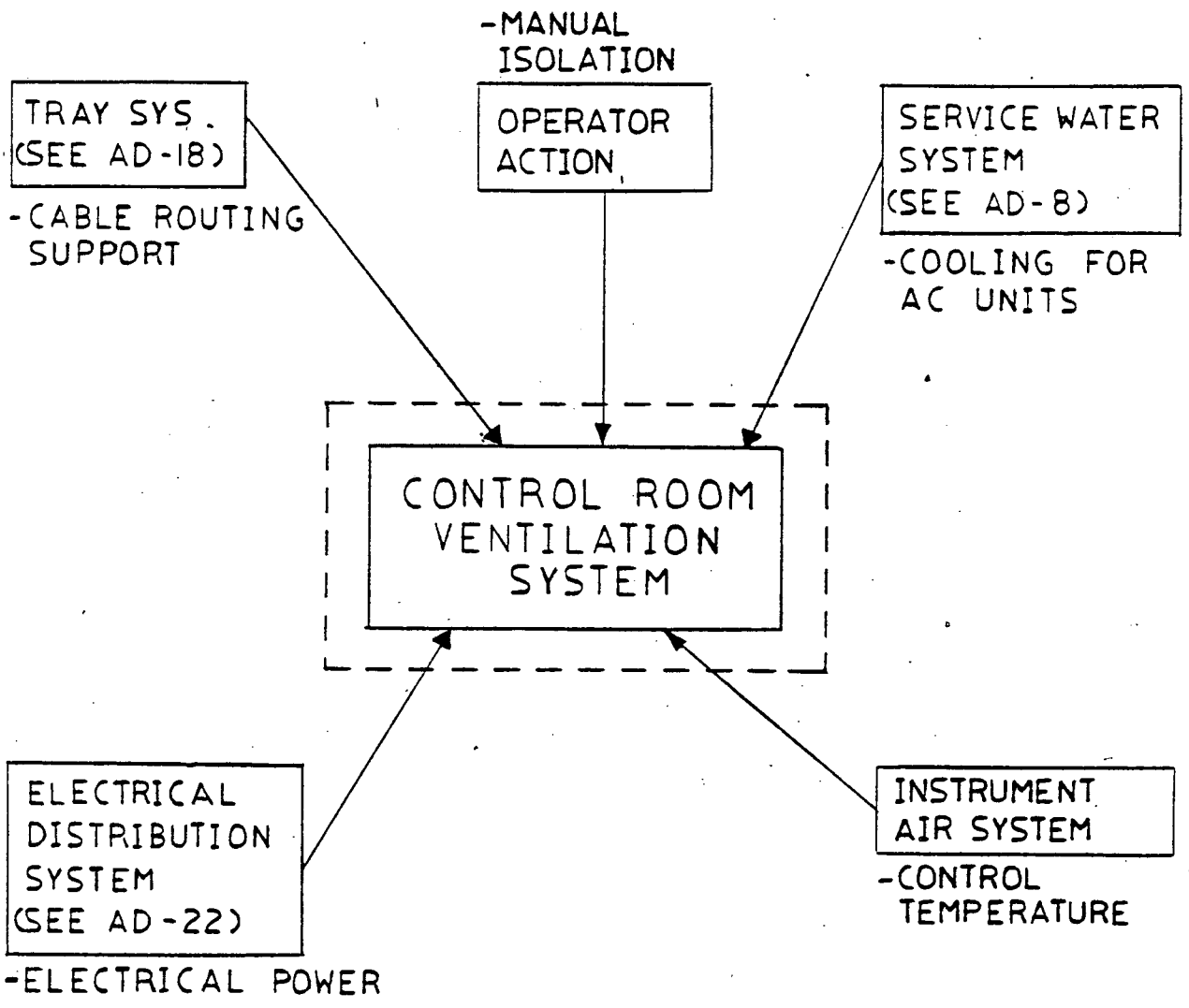

EBASCO SERVICES INCORPORATED	POWER AUTHORITY STATE OF NEW YORK INDIAN POINT NO 3 NPP CONTROL ROOM VENTILATION SYS AUXILIARY DIAGRAM	AD-7
DIV. MECH DR. LTB DATE 9-82 CH. AF SCALE NONE APPROVED W Ginsewald 10-1-82		

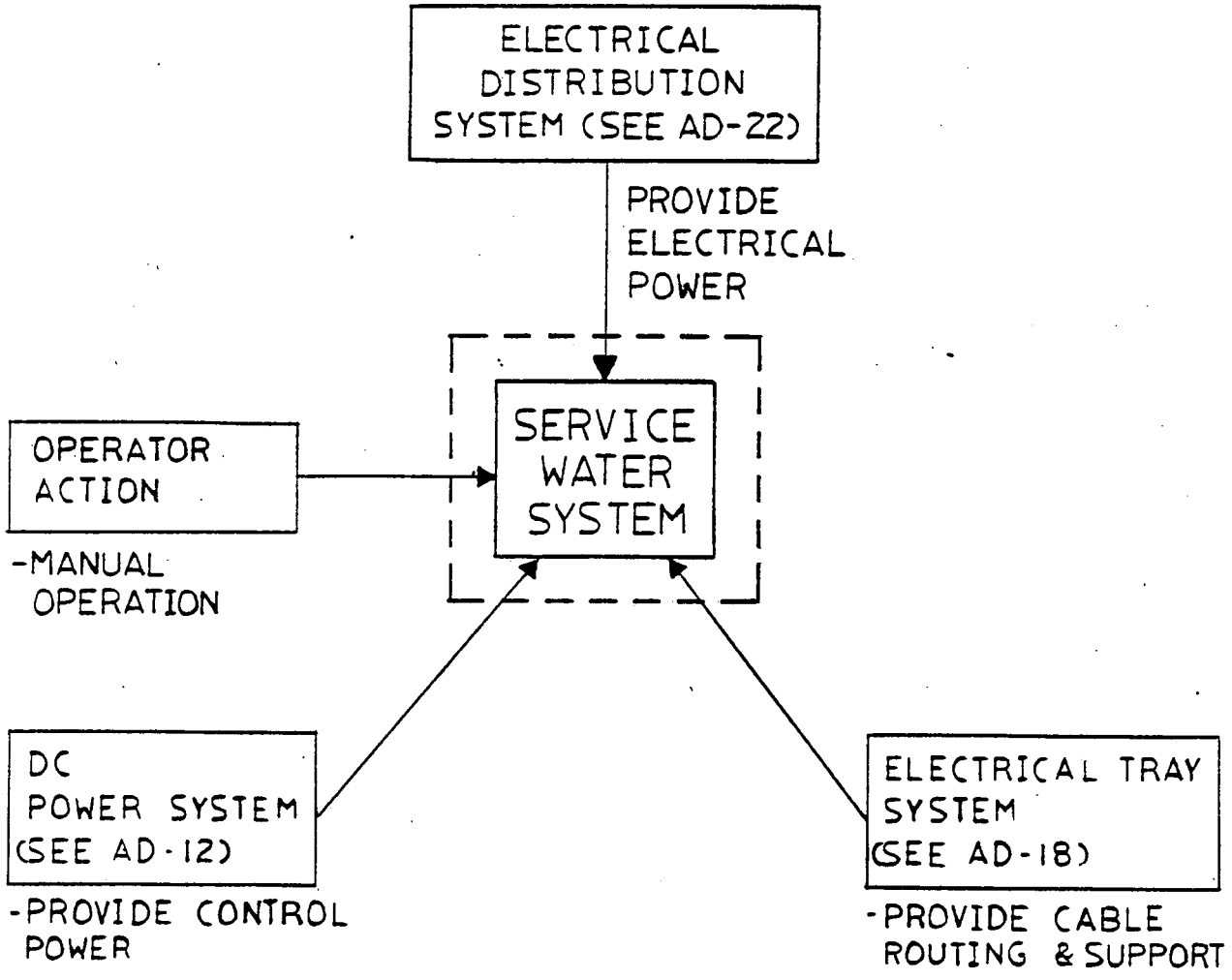

EBASCO SERVICES INCORPORATED		POWER AUTHORITY STATE OF NEW YORK INDIAN POINT NO.3 NPP SERVICE WATER SYSTEM AUXILIARY DIAGRAM	AD-8
DIV. MECH DR. KEJ DATE 9-82 CH. AF SCALE NONE	APPROVED W Grinswold 10-1-82 JFM TMD EPR		

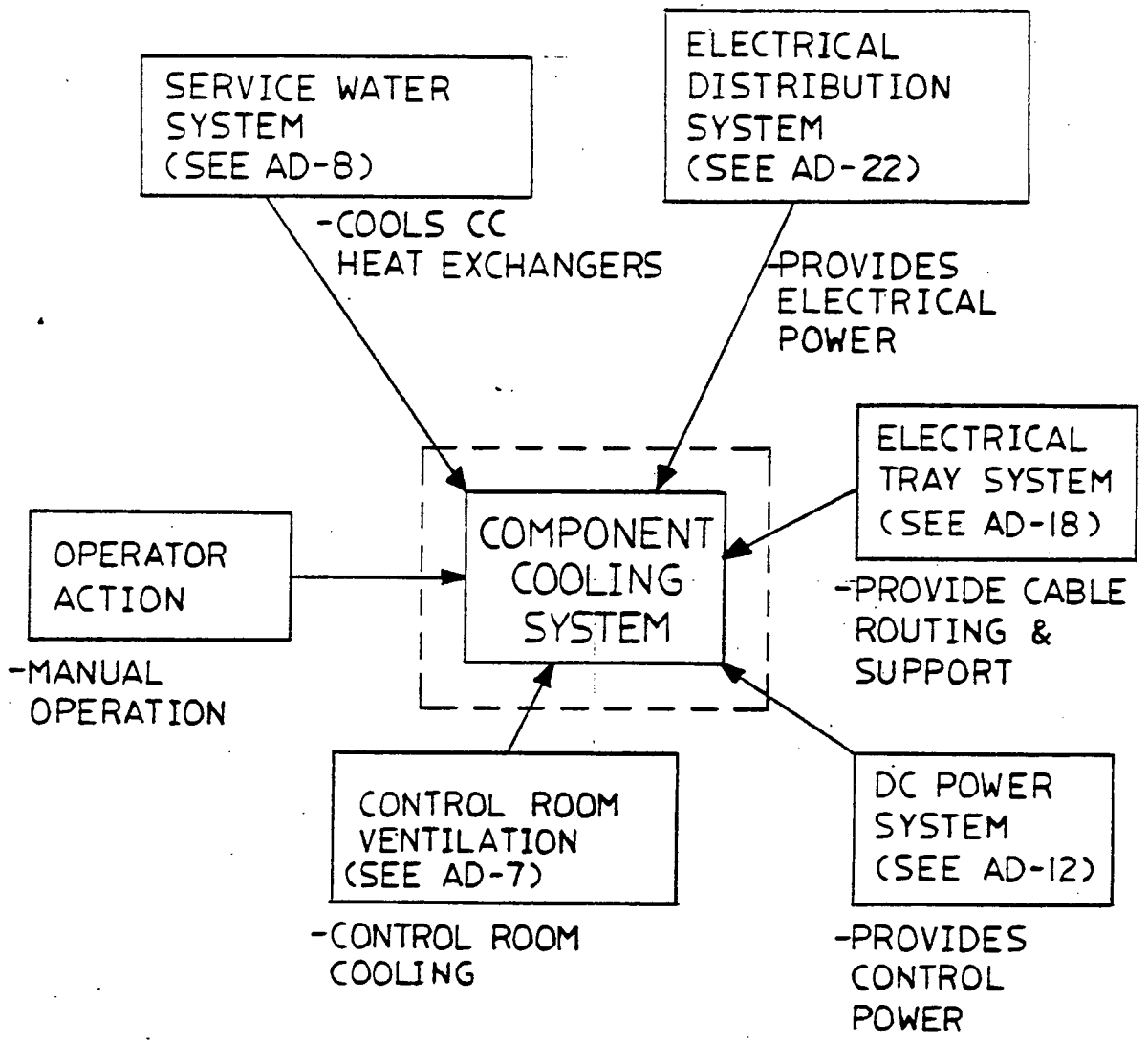

EBASCO SERVICES INCORPORATED	POWER AUTHORITY STATE OF NEW YORK INDIAN POINT NO.3 N.P.P. COMPONENT COOLING WATER SYSTEM AUXILIARY DIAGRAM	AD-9
DIV. MECH DR. V.Z. DATE 9-82 CH. AF SCALE NONE	APPROVED W Griswold 10-1-82 HPM UMD IAR	

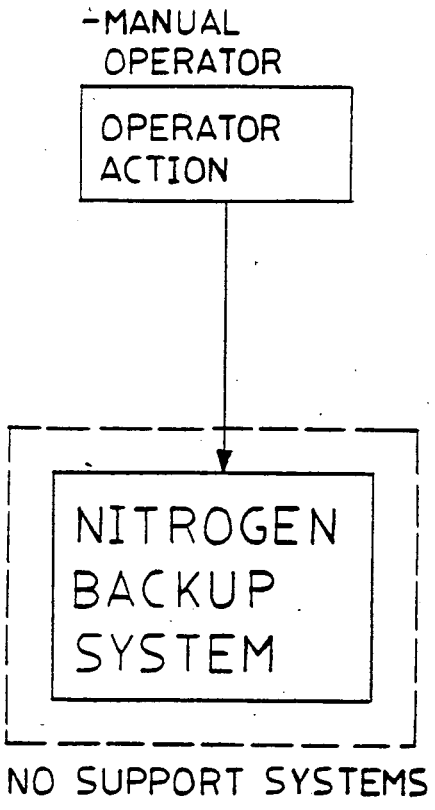

EBASCO SERVICES INCORPORATED	POWER AUTHORITY STATE OF NEW YORK INDIAN POINT NO.3 N.P.P. NITROGEN BACKUP SYSTEM AUXILIARY DIAGRAM	AD-10
DIV. MECH DR. V.Z. DATE 9-82 CH. AF SCALE NONE APPROVED W G Grissweld 10-1-82 RFM | MAD | EPR		

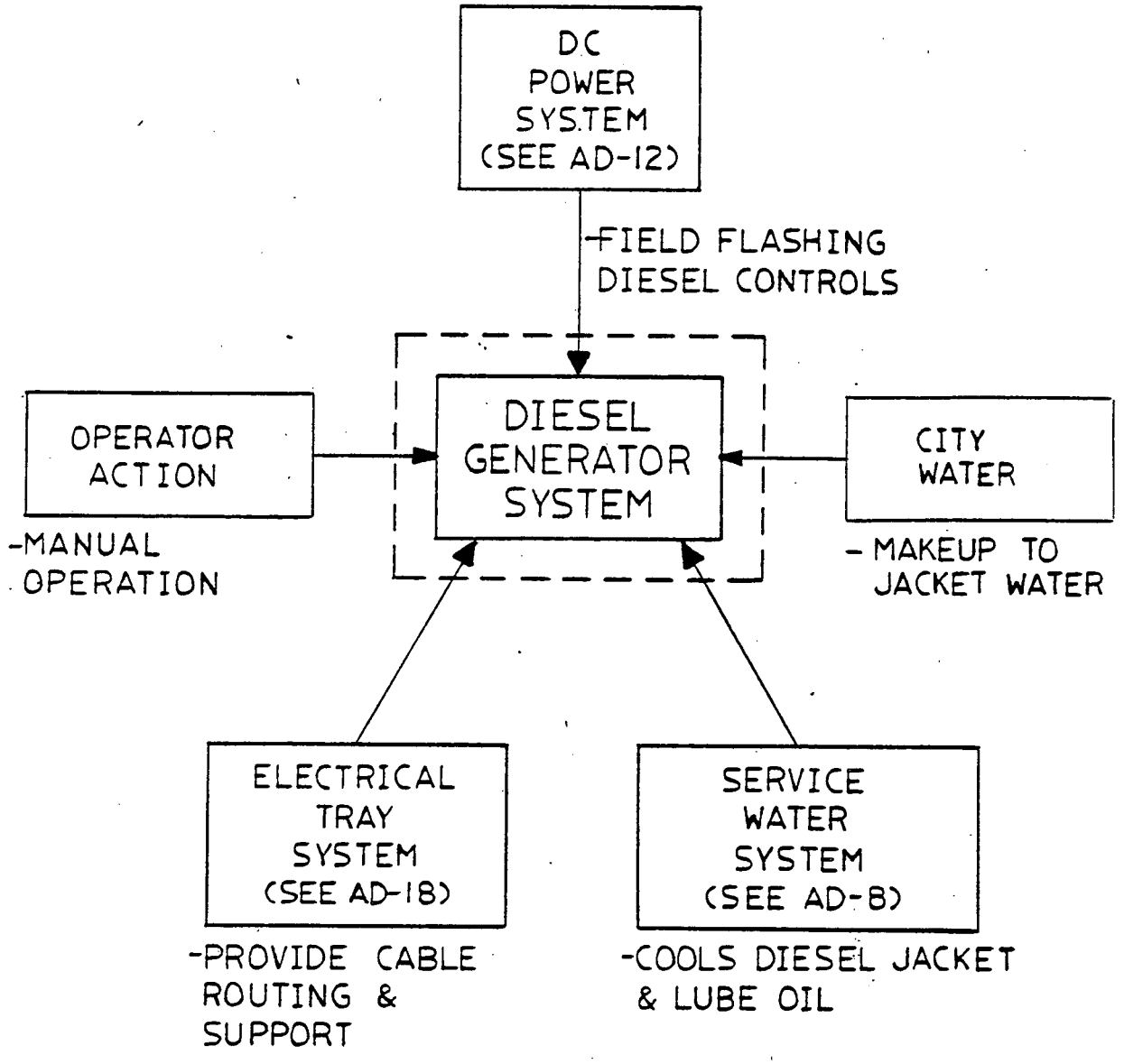

EBASCO SERVICES INCORPORATED DIV. MECH DR. KEJ DATE 9-82 CH. AF SCALE NONE	APPROVED W Gotsmond 10-1-82 SEM | TMD | SPR	POWER AUTHORITY STATE OF NEW YORK INDIAN POINT NO 3 NPP DIESEL GENERATOR SYSTEM AUXILIARY DIAGRAM	AD-11

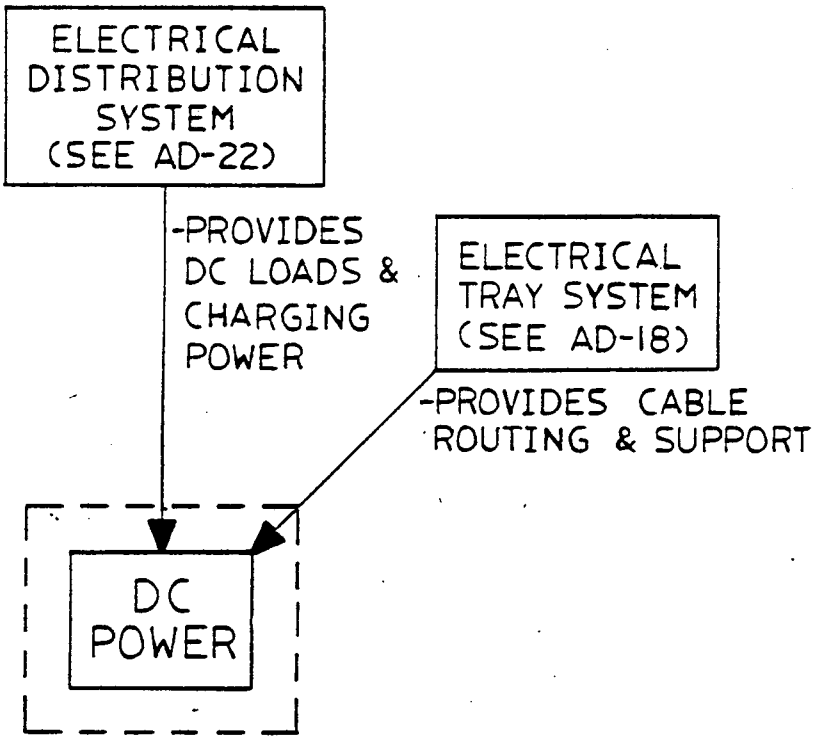

EBASCO SERVICES INCORPORATED		POWER AUTHORITY STATE OF NEW YORK INDIAN POINT NO 3 NPP D.C. POWER AUXILIARY DIAGRAM	AD-12
DIV. MECH DR. CEJ DATE 9-82 CH. AF SCALE NONE	APPROVED W Griswold 10-1-82 JPM / PWD / JPR		

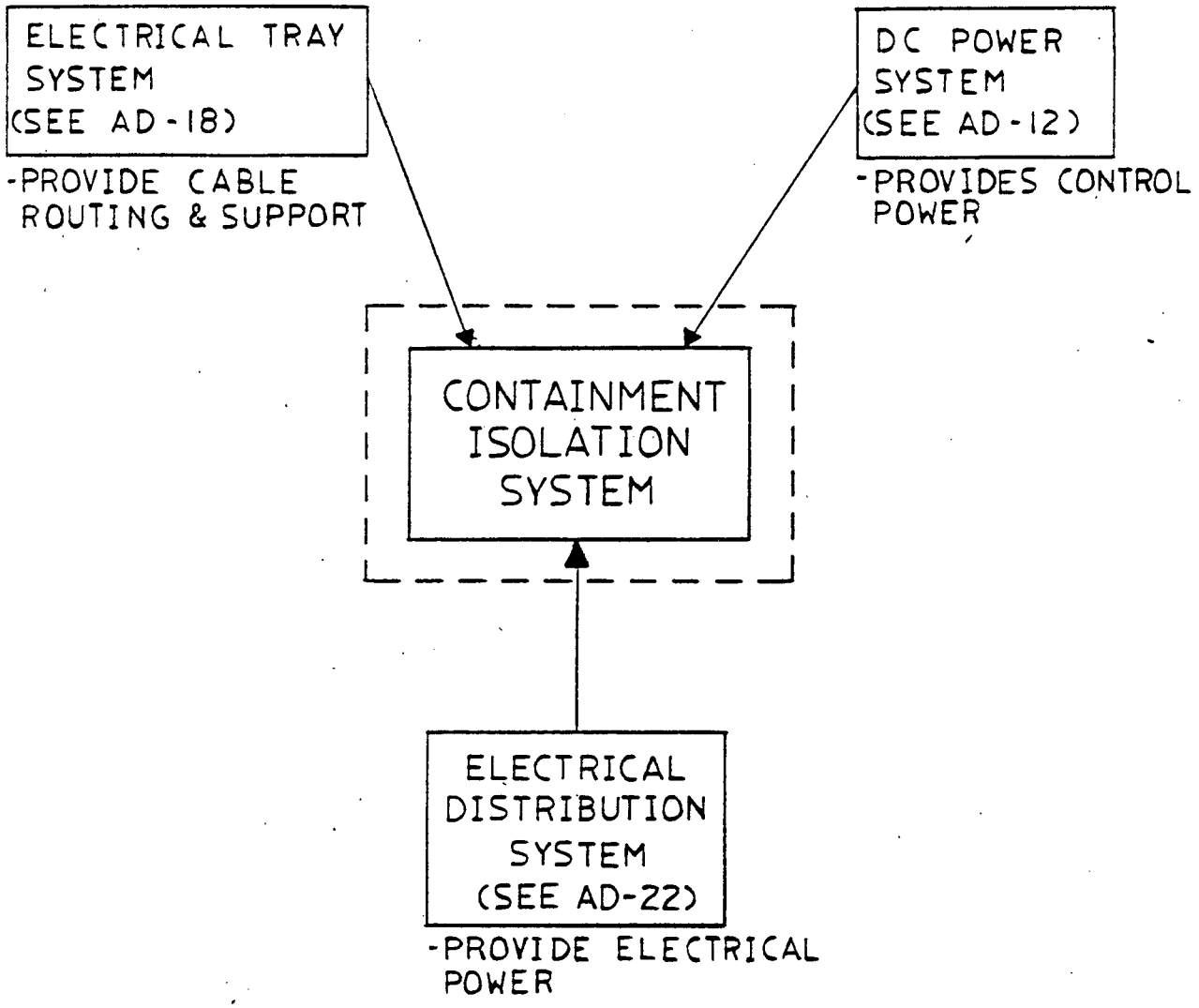

EBASCO SERVICES INCORPORATED	POWER AUTHORITY STATE OF NEW YORK INDIAN POINT NO 3 NPP CONTAINMENT ISOLATION SYSTEM AUXILIARY DIAGRAM	AD-13
DIV. MECH DR. KEJ DATE 9-82 CH. AF SCALE NONE	APPROVED W Gnewuch 10-1-82	

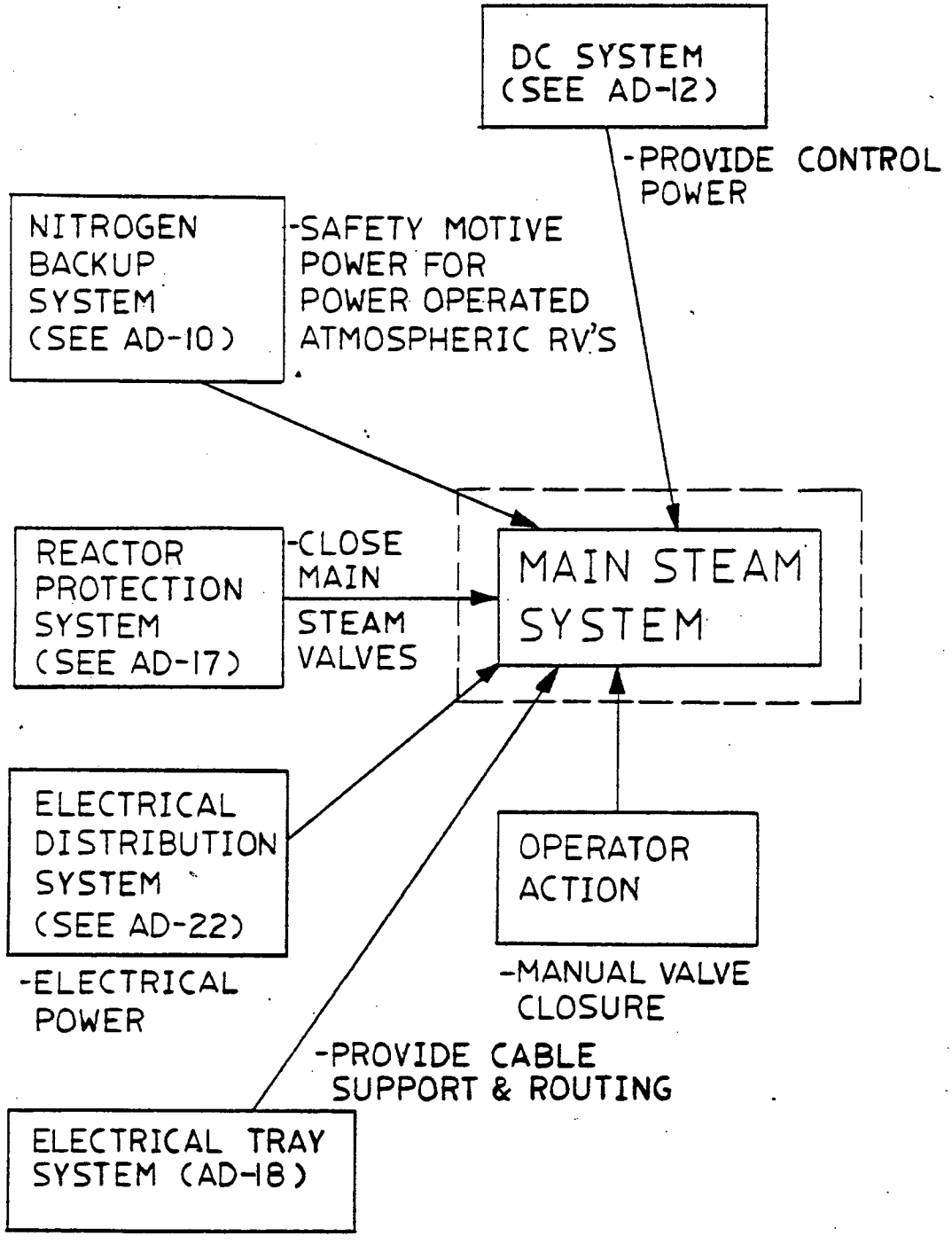

EBASCO SERVICES INCORPORATED	POWER AUTHORITY STATE OF NEW YORK INDIAN POINT NO. 3 N.P.P. MAIN STEAM SYSTEM AUXILIARY DIAGRAM	AD-14
DIV. MECH DR. V.Z. DATE 9-82 CH. AF SCALE NONE	APPROVED W Grissold 10.1.82 H/M WMD JPR	

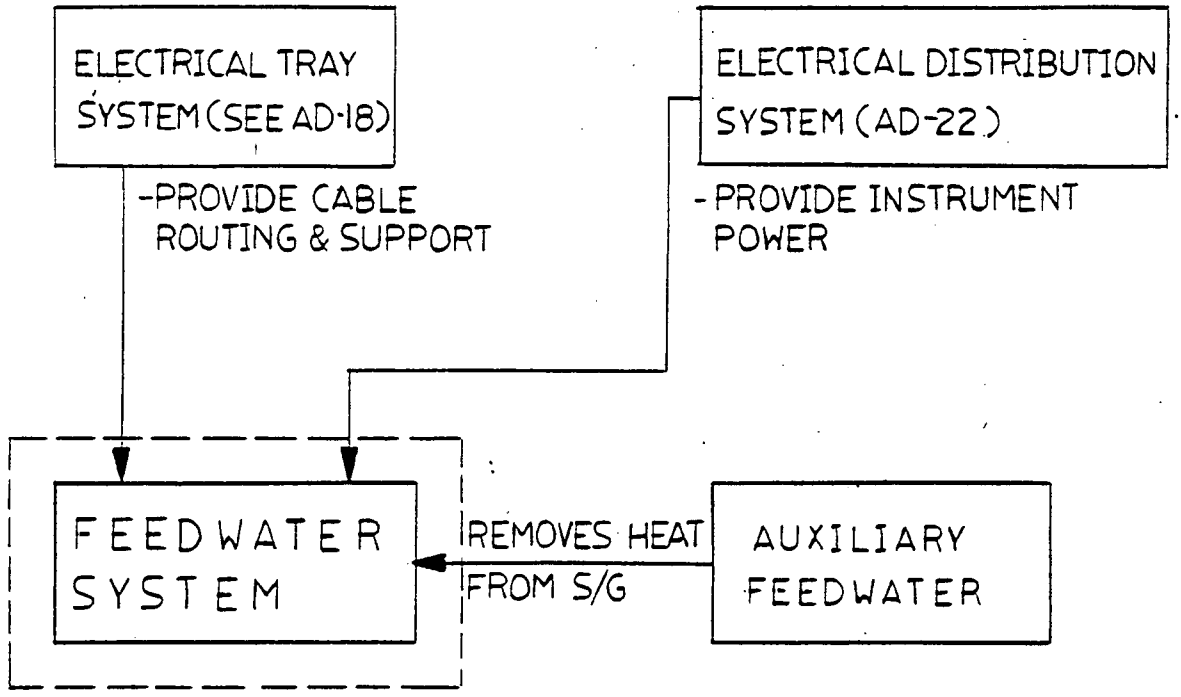

EBASCO SERVICES INCORPORATED	POWER AUTHORITY STATE OF NEW YORK INDIAN POINT NO. 3 N.P.P. FEEDWATER SYSTEM AUXILIARY DIAGRAM	AD-15
DIV. MECH DR. V.Z. DATE 9-82 CH. AF SCALE NONE	APPROVED W Gritsewicz 10-1-82 JFM TMD EPR	

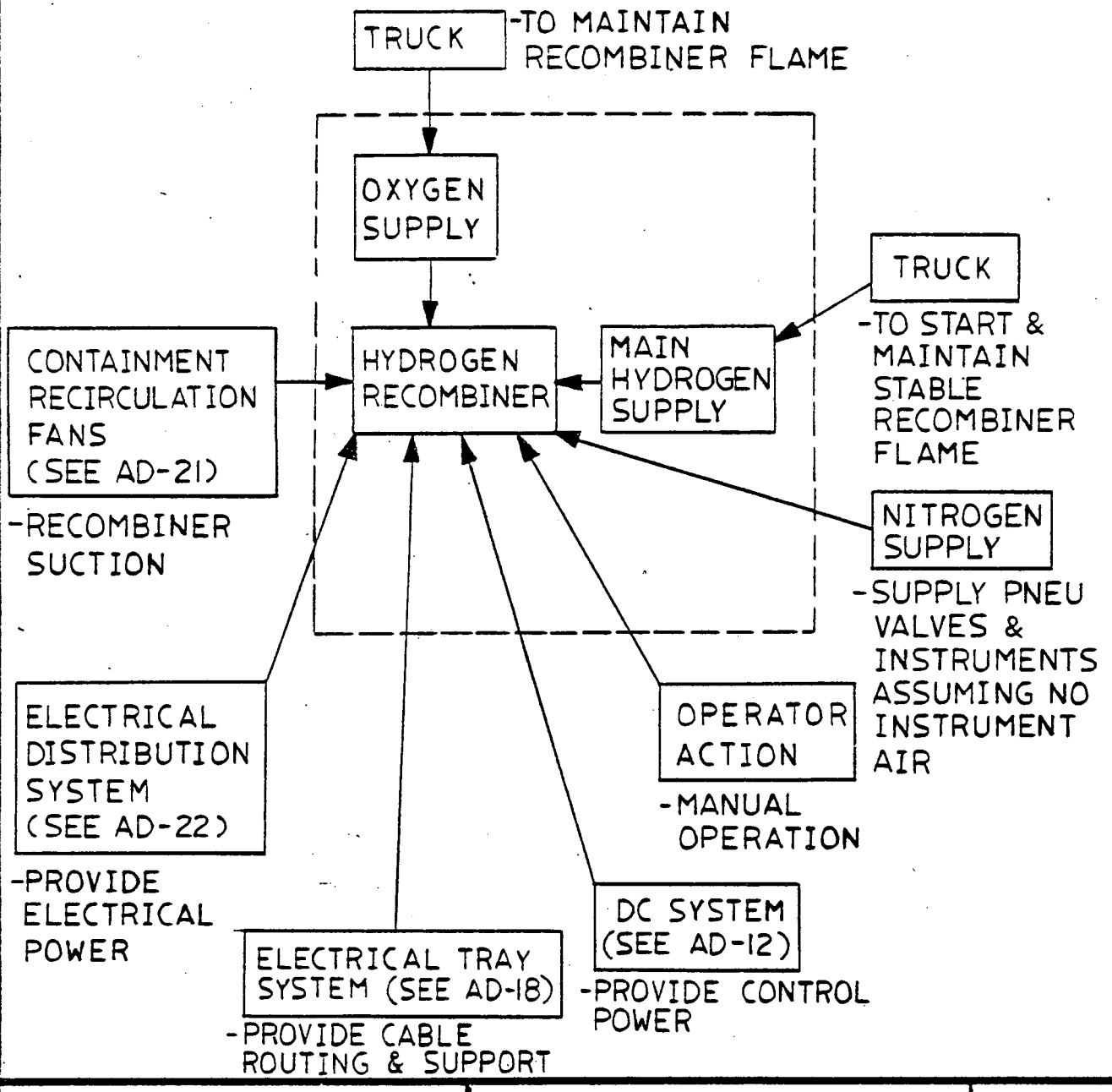

EBASCO SERVICES INCORPORATED	POWER AUTHORITY STATE OF NEW YORK INDIAN POINT NO. 3 N.P.P. HYDROGEN RECOMBINER SYSTEM AUXILIARY DIAGRAM	AD-16
DIV. MECH DR. V.Z. DATE 9-82 CH. AF SCALE NONE APPROVED W Grisswold 10-1-82		

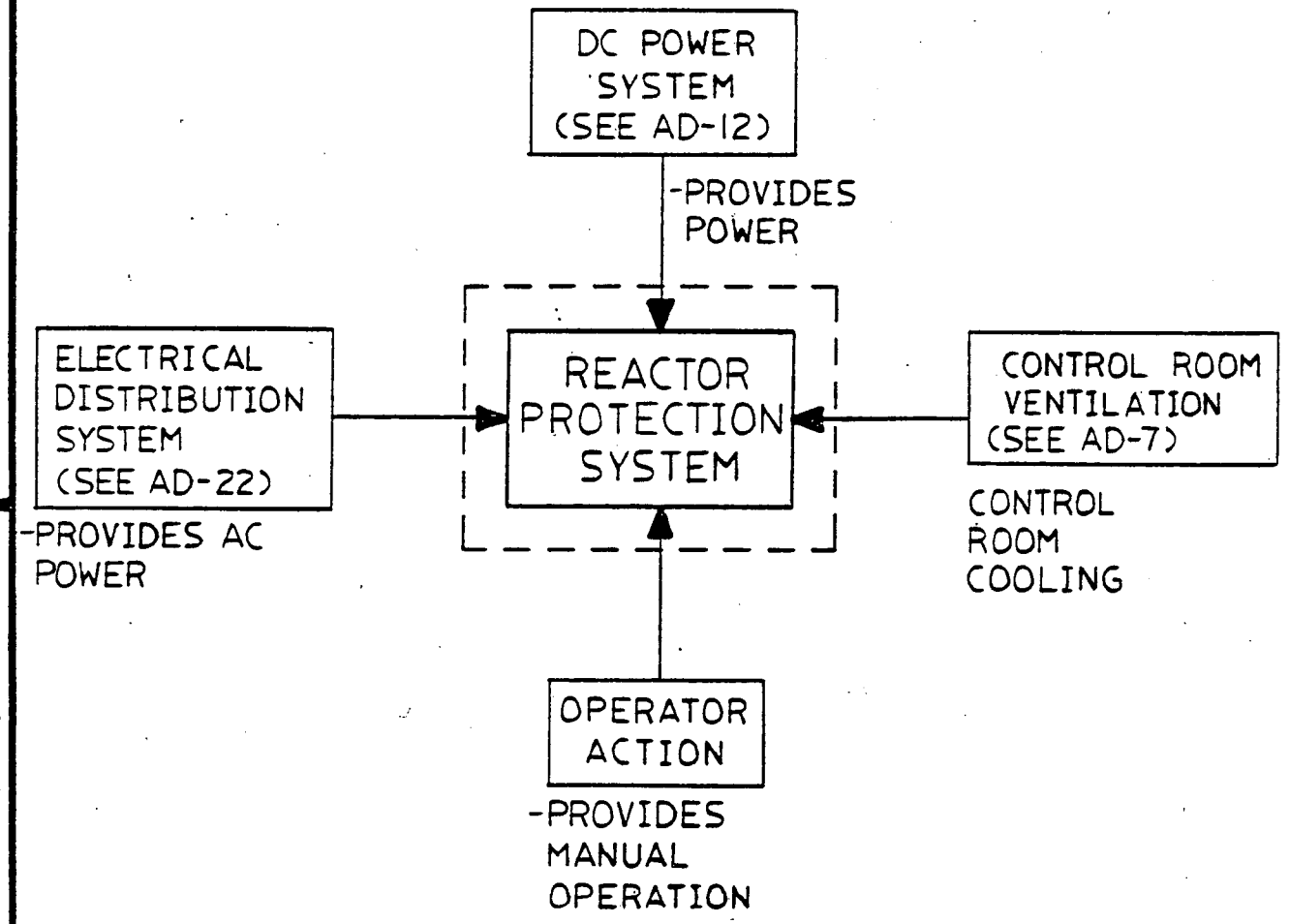

EBASCO SERVICES INCORPORATED DIV. MECH DR. KEJ DATE 9-82 CH. AF SCALE NONE	APPROVED W Grinsnold 10-1-82 DJM | DMD | EPR	POWER AUTHORITY STATE OF NEW YORK INDIAN POINT NO 3 NPP REACTOR PROTECTION SYSTEM AUXILIARY DIAGRAM	AD-17

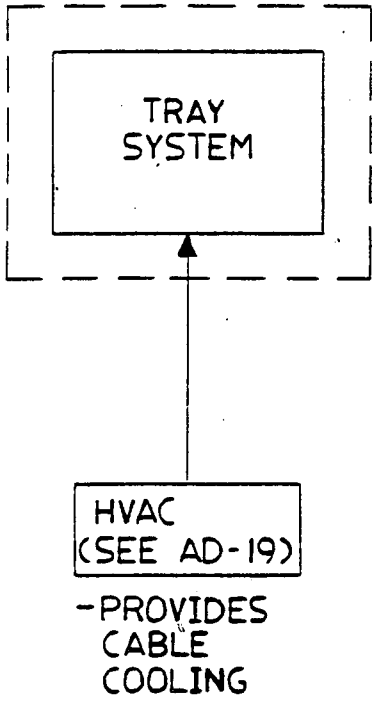

EBASCO SERVICES INCORPORATED	POWER AUTHORITY STATE OF NEW YORK INDIAN POINT NO. 3 TRAY SYSTEM AUXILIARY DIAGRAM	AD-18
DIV. MECH DR. RLB DATE 12-82 CH. SCALE NONE	APPROVED	

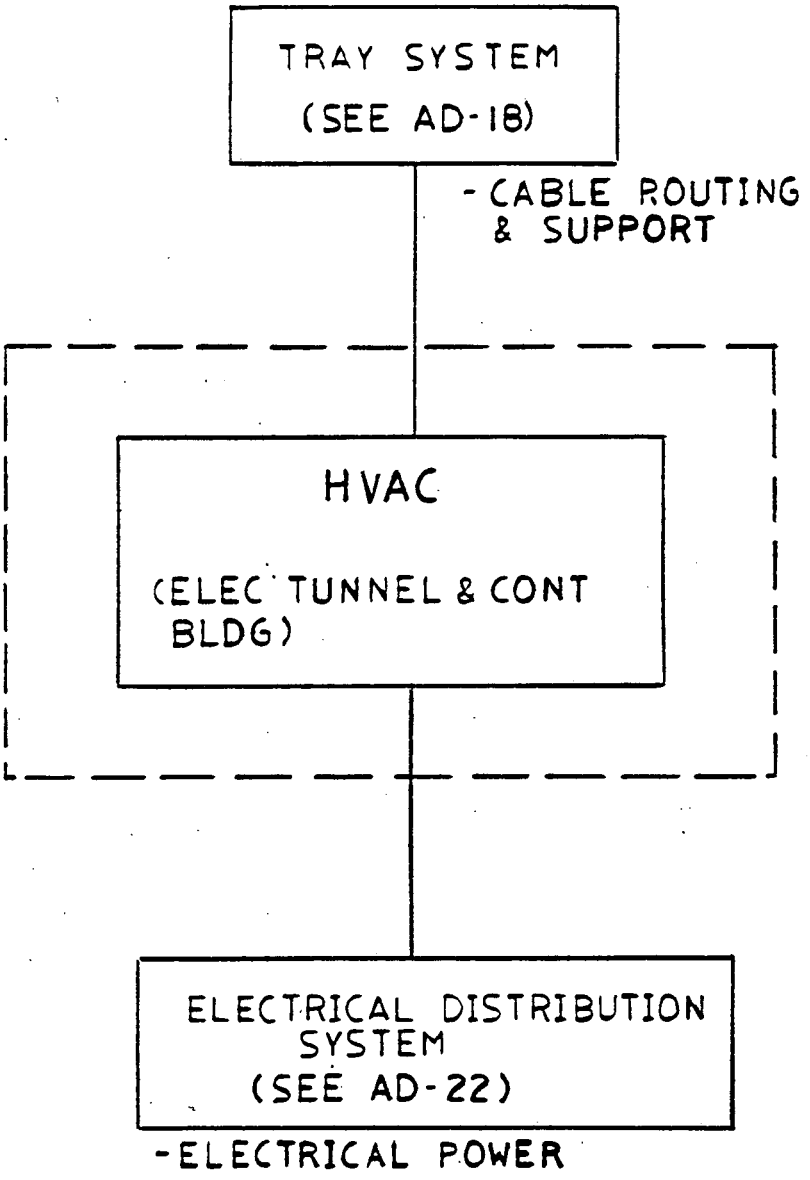

EBASCO SERVICES INCORPORATED	POWER AUTHORITY STATE OF NEW YORK INDIAN POINT NO 3 HVAC SYSTEM AUXILIARY DIAGRAM	AD-19
DIV. MECH DR. AF DATE 10-4 CH. HM SCALE NONE APPROVED		

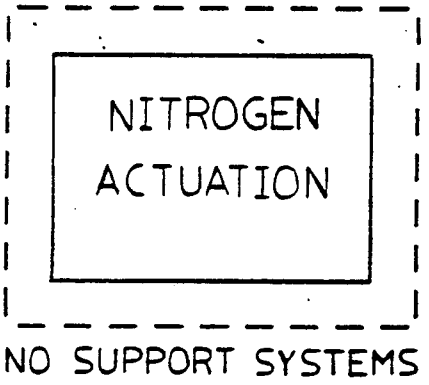

EBASCO SERVICES INCORPORATED	POWER AUTHORITY STATE OF NEW YORK INDIAN POINT NO. 3 NPP NITROGEN ACTUATION SYSTEM AUXILIARY DIAGRAM	AD-20
DIV. MECH DR. KEJ DATE 9-82 CH. AF SCALE NONE	APPROVED W Cornsweld 10-1-82 JFM | WMD | JPR	

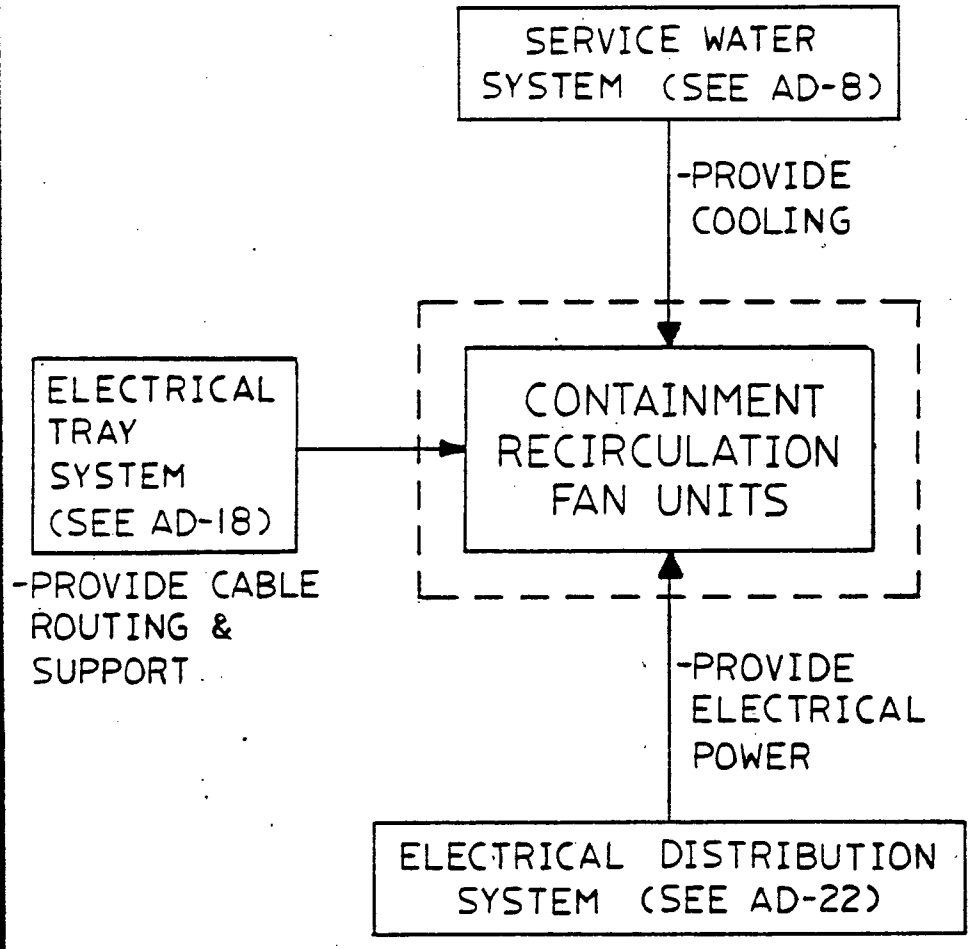

EBASCO SERVICES INCORPORATED	POWER AUTHORITY STATE OF NEW YORK INDIAN POINT NO 3 NPP CONTAINMENT RECIRC FAN UNITS AUXILIARY DIAGRAM	AD-21
DIV. MECH DR. KEJ DATE 9-82 CH. AF SCALE NONE	APPROVED W Arnswald 10.1.82	

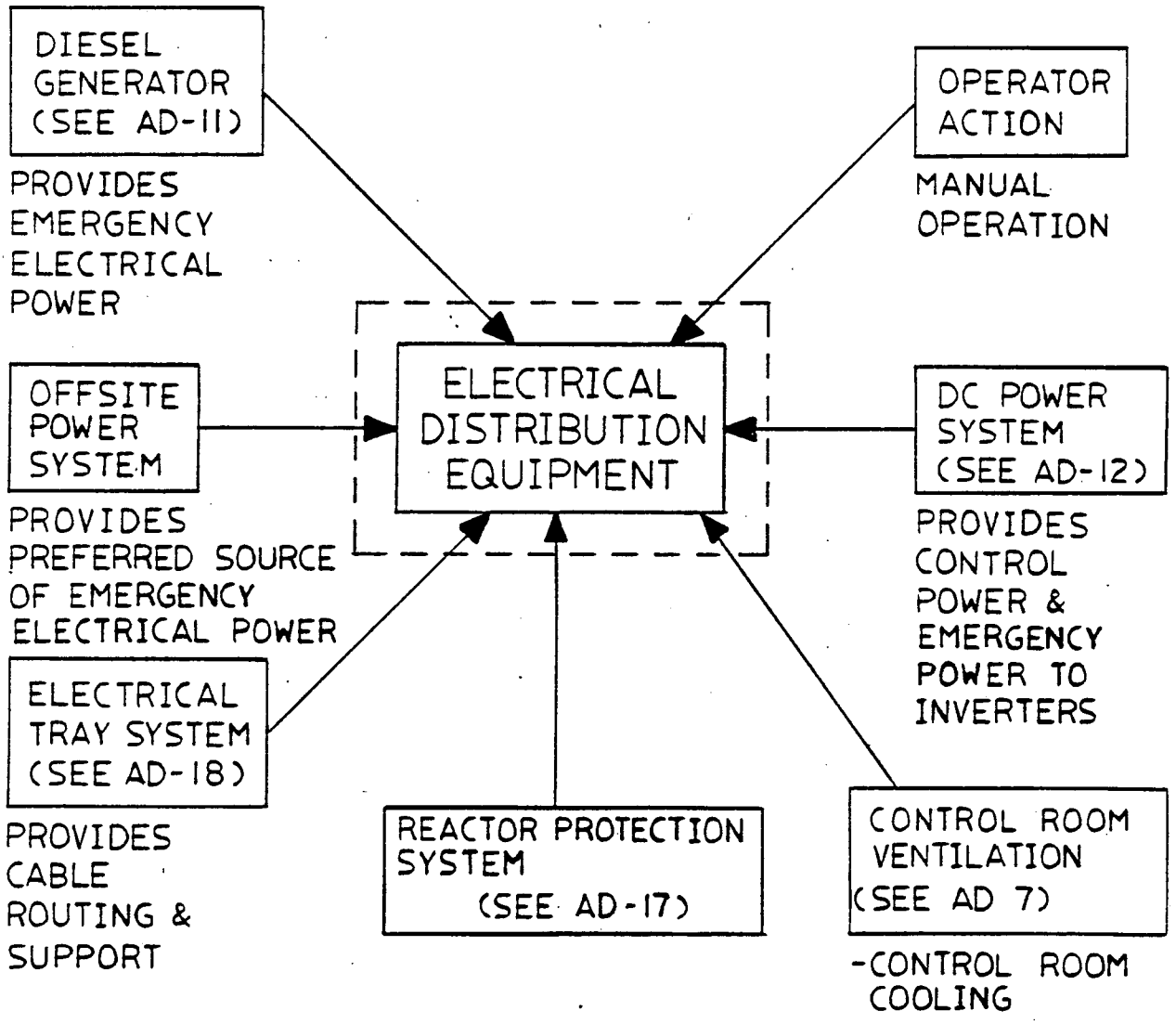

EBASCO SERVICES INCORPORATED	POWER AUTHORITY STATE OF NEW YORK INDIAN POINT NO 3. NPP ELECTRICAL DISTRIBUTION EQUIPMENT AUXILIARY DIAGRAM	AD-22
DIV. MECH DR. KEJ DATE 9-82 CH. AF SCALE NONE	APPROVED W Gmswold 10-1-82 WM DMD JPR	

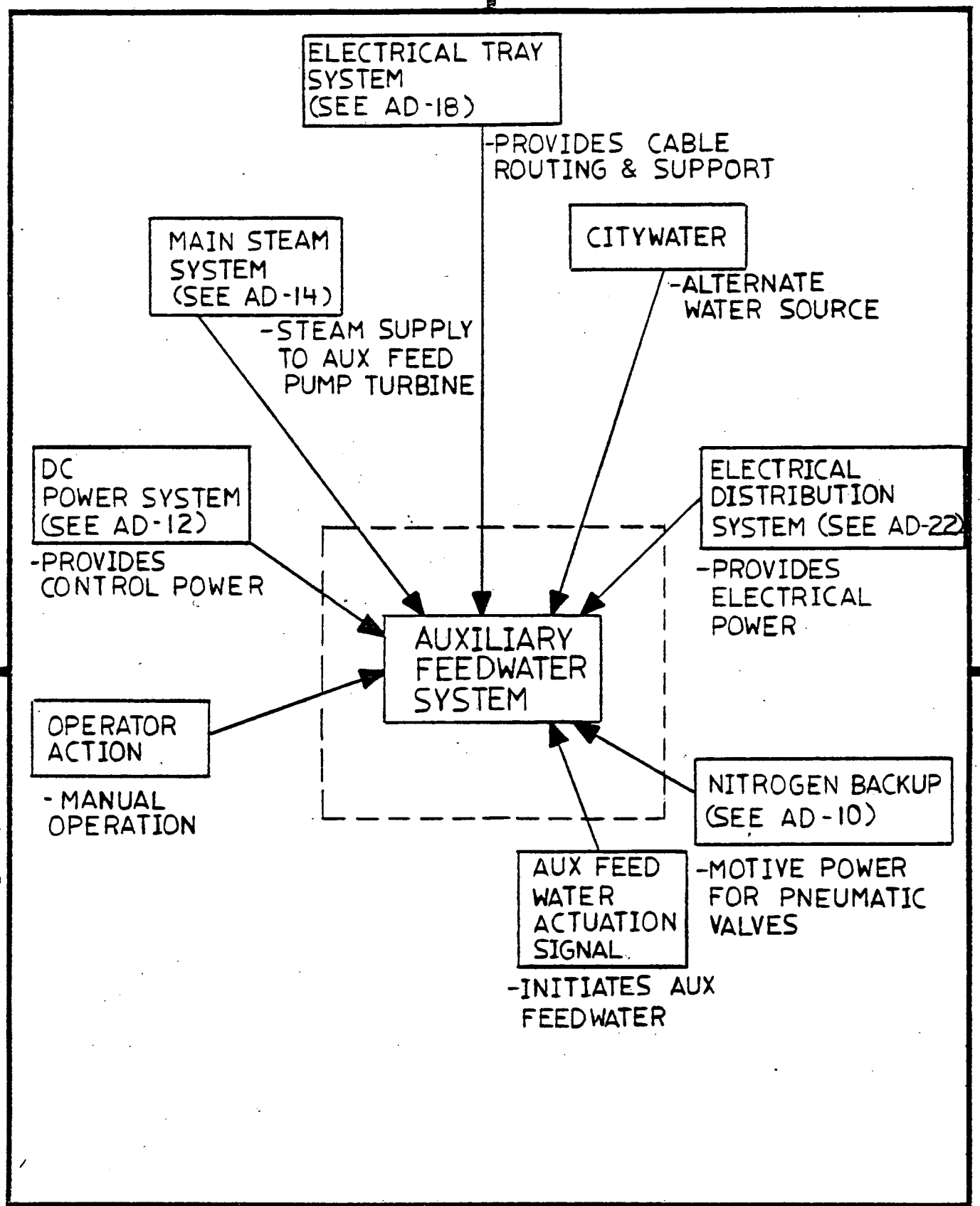

EBASCO SERVICES INCORPORATED	POWER AUTHORITY STATE OF NEW YORK INDIAN POINT NO 3 NPP AUXILIARY FEEDWATER SYSTEM AUXILIARY DIAGRAM	AD-23
DIV. MECH DR. KJ DATE 9-82 CH. AF SCALE NONE	APPROVED 10-1-82	