18-1

ECONOMIC AND ENVIRONMENTAL IMPACTS OF ALTERNATIVE CLOSED-CYCLE COOLING SYSTEMS FOR INDIAN POINT UNIT NO.2

SUPPLEMENT

VOLUME NO.1

CONS RK, INC.

NOTICE

THE ATTACHED FILES ARE OFFICIAL RECORDS OF THE OFFICE OF REGULATION. THEY HAVE BEEN CHARGED TO YOU FOR A LIMITED TIME PERIOD ANS MUST BE RETURNED TO THE CENTRAL RECORDS STATION 008. ANY PAGE(S) REMOVED FOR REPRODUCTION MUST BE RETURNED TO ITS/THEIR ORIGINAL ORDER.

DEADLINE RETURN DATE 8-8-75

50-247 ltr rec'd

MARY JINKS, CHIEF
CENTRAL RECORDS STATION

NOTICE

8110290006 750831
PDR ADOCK 05000247
P PDR

Consolidated Edison Company of New York, Inc.
4 Irving Place, New York, N. Y. 10003
Telephone (212) 460-5133

August 6, 1975

Mr. Ben C. Rusche, Director
Office of Nuclear Reactor Regulation
U.S. Nuclear Regulatory Commission
Washington, D.C. 20555

RE: Indian Point Station
Unit No. 2 - Docket No. 50-247

Dear Mr. Rusche:

Consolidated Edison Company of New York, Inc., (Con Edison) hereby transmits Supplement No. 1 to the "Economic and Environmental Impacts of Alternative Closed-Cycle Cooling Systems for Indian Point Unit No. 2."

This Supplement is submitted in response to a request for additional information made by Mr. George W. Knighton in his letter to Con Edison of July 10, 1975. The transmitted document constitutes a Supplement to Con Edison's Environmental Report submitted in support of Con Edison's "Application for Amendment to Facility Operating License" filed on December 2, 1974.

In accordance with Mr. Knighton's letter, we enclose three (3) signed originals and thirty-seven (37) copies of this submittal.

Very truly yours,

Paul L. Newman

Enclosures
cc w/enc:

Joseph Gallo, Esq.
Sarah Chasis, Esq.
Carmine Clemente, Esq.
Hon. Louis J. Lefkowitz
Hon. George V. Begany
Secretary U.S.N.R.C.

~~8202~~ 8110290006

SUPPLEMENT NO. 1

RESPONSE TO NUCLEAR REGULATORY COMMISSION QUESTIONS

This Supplement to the Indian Point Unit No. 2 cooling tower report consists of responses by Consolidated Edison Company of New York, Inc., to questions posed by the Environmental Projects Branch No. 1, Division of Reactor Licensing, United States Nuclear Regulatory Commission in the letter of July 10, 1975 from Mr. George W. Knighton, to Mr. William J. Cahill, Jr., Vice President, Consolidated Edison Company of New York, Inc.

August, 1975

Question I. 1 Clarify the discrepancy of the values used for the approach and range for a wet cooling tower shown to be 25 F and 15 F, respectively, on p. 2-12 and the values of 16 F and 25 F, respectively, shown in Table 3-1 on page 3-2. What would be the dimensions of a natural-draft cooling tower with an approach of 25 F and a range of 17.5 F assuming a circulating water flow rate of 840,000 gpm?

Response: The information in Table 3-1 is correct. The second paragraph on page 2-12 should read "Compared with cooling ponds and evaporative-type cooling towers, dry cooling towers have a high design approach and range. Optimum <u>range</u> and <u>approach</u> for a dry cooling tower system at Indian Point Unit No. 2 would be approximately 35 F and 30 F, respectively. In comparison, the optimum <u>range</u> and <u>approach</u> for a cooling pond at Indian Point Unit No. 2 would be 25 F and 10 F, and for a wet cooling tower system, 25 F and <u>16 F</u>.---" (Changes underlined).

The approximate dimensions of a natural-draft, counterflow tower with a 25 F approach, 17.5 F range and a flow rate of 840,000 gpm, would be:

Height ---------- 510 feet

Basin Diameter ---------- 410 feet

Question I.2 Upon what basis were fan-assisted natural-draft cooling towers or a circular mechanical-draft cooling tower not considered to be feasible alternative closed-cycle systems for Indian Point Unit No. 2?

Response: The preparation of the IP-2 cooling tower report, which was submitted to AEC on December 2, 1974, was based on the technology prior to late 1974. At the time of completing the final draft of the IP-2 cooling tower report, information available indicated that no fan-assisted natural draft nor circular mechanical draft cooling tower was in service in the United States. With no assurance as to actual performance and no basis for evaluating system reliability, it was concluded that neither design was a feasible cooling alternative for IP-2. It is noted that neither of these systems was discussed by NRC in the IP-3 Final Environmental Statement dated February, 1975.

As of this date, our information indicates that only one circular mechanical draft cooling tower and no fan-assisted natural draft cooling tower is in operation in the United States. The circular mechanical draft tower is reported to be serving a 550 MWe fossil fueled power plant in Mississippi since spring of 1975. With no operating data on hand for any meaningful assessment, Con Edison's appraisal of the circular mechanical draft and

fan-assisted natural-draft towers is that they are unproven alternatives.

It should be noted that the technology of closed-cycle cooling will obviously be developing in the next few years. In order to comply with the terms of the present license, Con Edison has been developing detailed engineering designs for a natural draft cooling tower system based on conceptual engineering which began as early as 1972. It is not possible to redesign the system to take into account developing technologies within the terms of the present license.

Questions II.1 Which permits have been obtained to date and which permits are still outstanding? Except for the NRC license amendment describe the status of progress of obtaining the remaining permits or approvals.

Response: Permits obtained to date and permits yet to be obtained or review actions yet to be completed are listed in Table S1-1, Schedule and Status Report, dated July 21, 1975. There are a total of six permit and review actions outstanding.

(a) Permit to Dump Excavated Material in River

Excavated material from construction of an alternative cooling system could be disposed of either by dumping into a body of water or at a land fill location. A river site for dumping would require a permit from the Corps of Engineers. Since the need for a permit for the dumping activity depends upon the method selected for disposal of exacavated material, and the method has not been selected, an application for a permit to dump excavated matial in the Hudson River has not been filed.

(b) Review by the Advisory Council on Historic Preservation

On December 2, 1974 Con Edison submitted to the Advisory Council a request for comments on Con Edison's IP-2 cooling tower report. Mr. John D. McDermott, Director of the Office

of Review and Compliance of the Advisory Council, wrote to Mr. Carl L. Newman in a May 6, 1975 letter that the Council had addressed comments on Con Edison's report directly to Mr. Daniel R. Muller at the NRC in a May 6, 1975 letter.

The Advisory Council requested in the May 6th letter to the NRC that the NRC "investigate this matter" to determine the applicability of Section 106 of the National Historic Preservation Act and Section 1(3) of Executive Order 11593. Apparently, Con Edison's letter of December 2, 1974 and accompanying report was not sufficient for the Council, and a statement from the NRC was required in accordance with the Council's regulations (36 C.F.R. § 800 et seq.). When Mr. Newman telephoned the Council on May 16, 1975, he was told the Council would advise him of its plans after they had received a response from the NRC.

If the NRC finds that Section 106 is applicable to Con Edison's alternative closed cycle cooling system project at Indian Point Unit No. 2, the NRC would be required to submit the project to the Council for review and comment prior to NRC approval of Con Edison's

preferred alternative. Section 1(3) requires establishment of procedures between the NRC and the Council to preserve and enhance non-federally owned historic and cultural properties.

NRC Question III.25, which is discussed later in this supplement, asks that the degree of visual impact of alternative cooling systems be assessed where impact upon parks, overlooks and historic places in the National Register might reasonably be considered significant. Apparently, this inquiry reflects the Advisory Council's request of May 6th to determine the applicabililty of Section 106 of the National Historic Preservation Act. The status of Con Edison's response to Question III.25 is reported below. It is not possible to say at this time on what schedule the NRC and the Advisory Council would act on the requirements of the National Historic Preservation Act and Executive Order 11593.

(c) <u>Building Permit for Construction of Cooling Tower</u>

An application to the Village of Buchanan Building Department for a Building Permit for a hyperbolic natural draft wet cooling tower

was filed December 2, 1974. Con Edison's representatives met with officials of Buchanan and neighboring communities on January 21, 1975 to pursue the application.

In accordance with the request of the Mayor of Buchanan, Con Edison took several officials of Buchanan and adjacent communities on a visit to the Three Mile Island Plant of Metropolitan Edison Company near Harrisburg, Pennsylvania, on February 22, 1975. There they observed four natural draft cooling towers, two in operation and the other two fully constructed but not in operation. The application was denied March 4, 1975 on the ground that the designed cooling tower did not comply with the zoning code of the Village of Buchanan.

(d) Zoning Variance From Height Regulations

An appeal to the Village Zoning Board of Appeals was filed by Con Edison March 21, 1975. The Board held a public hearing on May 6, 1975. By decision dated June 19, 1975, the Board denied the appeal on the grounds, inter alia, that the application was premature in that there was "no present intent, commitment or direction to begin excavating, construction or any other activity on the premises for which a building

permit would be required by the Village of Buchanan." This decision was appealed to the Supreme Court of the State of New York on July 17, 1975.

(e) Review by the New York State Commission for Historic Preservation

On December 2, 1974 Con Edison submitted to the New York State Commission for Historic Preservation a request for comments on Con Edison's IP-2 cooling tower report.

On July 24, 1975 Con Edison was advised * by a representative of the State Commission for Historic Preservation, that their reviews had been completed and results of the review were expected in August, 1975.

(f) Permit for Emission of Air Contaminants

On December 2, 1974 Con Edison submitted to the New York State Department of Environmental Conservation (DEC) the IP-2 cooling tower report and an application for issuance of a construction permit for the cooling tower.

* Telephone communication between S. Dambra of Con Edison and Lenore Rennenkampf of the State Commission.

The Company initiated this action because of a statutory requirement for a permit, although state regulations for construction permits do not specifically cover cooling towers.

In a March 4, 1975 letter to Con Edison, DEC wrote that the Company's submittal of December 2, 1974 "did not constitute formal application for a permit to construct." The DEC's letter instructed Con Edison to file a Stationary Combustion Application, a form designed for boilers. Accordingly, Con Edison submitted on March 17, 1975 the Stationary Combustion Application for a permit to construct a cooling tower. As of mid-July Con Edison was advised by DEC that technical review could be expected to continue through mid-August and no estimate of completion of the review was given.

TABLE S1-1

Permit Schedule & Status Report

Status Date July 21, 1975

Page 1 of 4

Project Indian Point #2 - Cooling Tower

Project Manager M. Silberstein

Project No. 2732

Project Engineer S. Dambra

Budget Reference No. 3 EP 5

Schedule Engineer G. Herskowitz

S = Schedule A = Actual CPM REF = Node Number *Expiration Date

Permit Description	Issuing Authority	Code	Filing	Issuance	Receipt	Permit No.	Remarks
400' Meterological Tower Installation	New York State Hudson River Valley Authority	S	3-5-73		5-1-73		
		A	3-5-73	3-26-73	4-4-73		
		CPM REF					
400' Meterological Tower Marking and Lighting	United States Federal Aviation Agency	S	3-5-73		3-8-73	73-EA-257-OE	
		A	3-5-73	3-6-73	3-8-73		
		CPM REF					
400' Meterological Tower Construction	Village of Buchanan - Building Dept.	S	5-7-73		5-25-73		
		A	5-29-73	6-4-73	6-7-73		
		CPM REF				* 6-4-76	
Install 2 Trailers for Biological Studies (Temporary)	New York State Hudson River Valley Authority	S	9-1-73				
		A	9-12-73	10-29-73	11-1-73		
		CPM REF					
Install 2 Trailers for Biological Studies (Temporary)	Town of Cortland - Building Dept.	S					A Bond that guarantees removal of trailers must be renewed yearly
		A	10-2-73	10-16-73	10-17-73		
		CPM REF				* 10-1-75	

TABLE S1-1 (continued)

Permit Schedule & Status Report

Status Date July 21, 1975

Project I.P. Unit #2 Cooling Tower

Project No. 2732

Budget Reference No. 3 EP 5

Page 2 of 4

Project Manager M. Silberstein

Project Engineer S. Dambra

Schedule Engineer G. Herskowitz

S = Schedule A = Actual CPM REF = Node Number * Expiration Date

Permit Description	Issuing Authority	Code	Filing	Issuance	Receipt	Permit No.	Remarks
Permit to Dump Excavated Material in River	United States Corps of Engineers	S	12-1-75		6-1-76		Need for this permit will depend upon method selected for disposal of excavated material.
		A					
		CPM REF					
Permit for Tower	United States Federal Aviation Agency	S	12-1-74		12-1-75	74-EA-1346-OE	FAA requires notification - start of construction and after construction reaches greatest height.
		A	12-2-74		5-5-75		
		CPM REF	12635		12643	*12-14-76	
Review	United States Advisory Council on Historic Preservation	S	12-1-74		12-1-75		Council requested NRC in letter of 5/6/75 to investigate applicability of National Historic Preservation Act and advise them.
		A	12-2-74				
		CPM REF	12835		12843		
Evaluation of the economic and environmental impacts of an Alternate closed cycle cooling system	United States Nuclear Regulatory Commission	S	12-1-74		12-1-75		
		A	12-2-74				
		CPM REF	12033		12046		
Approval of construction pursuant to 10 CFR - Sec. 50.59 and amendment of operating license	United States Nuclear Regulatory Commission	S	12-1-74		12-1-75		
		A	12-2-74				
		CPM REF	12235		12244		

TABLE S1-1 (continued)

Permit Schedule & Status Report

Status Date July 21, 1975

Project I.P. Unit #2 Cooling Tower

Project No. 2732

Budget Reference No. 3 EP 5

Page 3 of 4

Project Manager M. Silberstein

Project Engineer S. Dambra

Schedule Engineer G. Herskowitz

S = Schedule A = Actual CPM REF = Node Number

Permit Description	Issuing Authority	Code	Filing	Issuance	Receipt	Permit No.	Remarks
Review	New York State Commission for Historic Preservation	S	12-1-74		12-1-75		Staff reviews completed — results of review expected in August.
		A	12-2-74				
		CPM REF	13935		13943		
Review	New York State Hudson River Valley Commission	S	12-174		12-1-75		Response received 12-29-74 stating that project is specifically excluded from review.
		A	12-2-74	12-24-74	1-3-75		
		CPM REF	14635		14643		
Permit for emission of Air Contaiminants	New York State Department of Environmental Conservation	S	12-1-74		12-1-75		Received letter of 3-4-75 requesting formal application of form Air 100C. Form filed 3-17-75. Technical review expected to continue until mid-August.
		A	12-2-74				
		CPM REF	13335		13343		
		S					
		A					
		CPM REF					
		S					
		A					
		CPM REF					

TABLE S1-1 (continued)

Permit Schedule & Status Report

Status Date July 21, 1975

Project I.P. Unit #2 Cooling Tower

Project No. 2732

Budget Reference No. 3 EP 5

Page 4 of 4

Project Manager M. Silberstein

Project Engineer S. Dambra

Schedule Engineer G. Herskowitz

S = Schedule A = Actual CPM REF = Node Number

Permit Description	Issuing Authority	Code	Filing	Issuance	Receipt	Permit No.	Remarks
Discharge Permit N.P.D.E.S. Section 402 F.W.P.C.A.	United States Environmental Protection Agency	S				N.Y. 0004472	Filed request for adjudicatory hearing 4-7-75. EPA issued public notice granting our request 5-16-75 No date for hearing has been set.
		A	6-14-71	2-25-75	4-1-75		
		CPM REF					
Building Permit for construction of Cooling Tower	Village of Buchanan Building Department	S	12-1-74		6-1-75		Application filed 12-2-74 returned. New application with filing fee submitted 2-21-75. Application denied 3-4-75.
		A	2-21-75				
		CPM REF	14335		14339		
Zoning Variance from Height Regulations	Village of Buchanan Zoning Board of Appeals	S	12-1-74		6-1-75		Appeal for variance filed 3-21-75. Public hearing held 5-6-75 Denied 6-19-75. Request for Judicial Review by N.Y.S. Supreme Court filed 7-18-75 pursuant to Article 78 of CPLR.
		A	3-21-75				
		CPM REF	14335		14339		
		S					
		A					
		CPM REF					
		S					
		A					
		CPM REF					

Question III.1 Provide a scaled map which shows the relation between the site boundaries and the corporate limits of the towns of Buchanan and Peekskill.

Response: Two copies of the zoning map of the Town of Cortlandt are being furnished with this submittal to the Commission Staff. The map delineates the Con Edison property in Buchanan and the corporate limits of Buchanan and Peekskill.

Question III.2 Provide maps of the towns of Peekskill and Verplanck that indicate the present zoning categories and a description of what each zoning category allows.

Response: Two copies of the map of Peekskill illustrating zoning categories are being furnished with this submittal to the Commission Staff. Verplanck zoning is delineated on the Cortlandt map referred to in the response to Question III.1. Verplanck is in the Town of Cortlandt. It is not a legal entity and has no codes of its own. The region referred to as Verplanck is located on and about the Verplanck Peninsula shown on the U.S. Coast and Geodetic Survey Chart, reproduced as Figure 6.8, page 6-28 of the December, 1974 report on alternative cooling systems.

Question III.3 The submitted noise study contains suggestions on what sound mitigative measures could be installed on the various types of cooling towers considered. However, there is no further discussion on the use of such measures nor the use of external natural or artificial barriers or screens (with the exception of the attenuation afforded by existing site topography) for sound attenuation. The applicant should state position with regard to these measures and indicate the reason they were not considered in the evaluation of closed-cycle cooling system alternative.

Responses: The schedule imposed upon Con Edison to select and analyze alternate cooling systems for Indian Point No. 2 permitted only evaluation of commercially available equipment.

The referenced study (Appendix H, page 88) suggested noise reduction measures only for natural-draft cooling towers. These measures are the opinions of the acoustical consultant, Ostergaard Associates. The sound mitigative measures were suggested primarily from an acoustical performance standpoint; their feasibility and practicality were neither verified or necessarily considered with respect to thermodynamic, mechanical and structural design parameters. Con Edison did not consider these measures as readily available, proven technology.

Utilization of measures suggested by Ostergaard Associates or in the question above, could

have deleterious effects on the operation of natural-draft cooling towers proposed, such as restricting air flow which would, in turn, reduce the tower's cooling capacity. Furthermore, the acoustical performance of the suggested measures remains unproven. We believe that it is imprudent to employ unproven noise control methods which might jeopardize cooling tower operation.

Noise emission estimates for cooling towers presented in the noise study are for units which are commercially available. Attenuation provided by site topography (barrier effect of hills) was included in estimates of cooling tower noise emissions.

Natural-draft cooling tower noise emissions are estimated not to exceed the residential zone noise limits imposed by the Village of Buchanan Zoning Code. Natural draft cooling tower noise emissions can potentially exceed the Buchanan noise limits in non-residentially zoned industrial areas; however, no adverse environmental impact in these non-residential areas is expected because tower noise emissions will not raise area noise levels, which are dominated by vehicle noise, beyond the 70 dB(A) limit

suggested for recreational, commercial and industrial land use by the U.S. Environmental Protection Agency. Accordinaly, it is necessary to consider using measures which are unproven and potentially deleterious to cooling tower operation.

Noise reduction measures for type mechanical-draft cooling towers proposed where examined (by Con Edison) and dismissed for reasons similar to those described above for natural-draft cooling towers. We believe that is imprudent to employ unproven noise control methods which might jeopardize cooling tower operation. Furthermore, the present license does not allow time for a research and development project to reduce noise emissions.

Mechanical-draft cooling towers, which are noiser than natural-draft cooling towers, are estimated to exceed Buchanan noise limits in both residential and non-residential zones. Operation of mechanical-draft cooling towers is estimated to cause greater risk of community dissatisfaction to noise in residential zones. Accordingly, to minimize potential noise impact, natural-draft cooling towers were selected as the acoustically preferred alternative.

Questions III.4 In Appendix G the applicant assigns an accuracy of ±3dB to the Dyer and Miller predictive technique. Provide the basis for this assignment.

Response: The accuracy with which individual octave band sound levels can be predicted by the Dyer and Miller predictive technique was estimated by Ostergaard Associates to be ±3dB. Basis for this assignment, according to Ostergaard Associates, is shown by Reference A-1, p. 47, Figure 7 of Appendix G.

Question III.5 In Appendix G Table III, Leg and Ldn are listed in "dB" rather than "dBA". State which of the two referenced (i.e., "dB" or "dBA") is correct.

Response The designation "dBA" is correct.

Question III.6 State the reason why the L_{90} was chosen for comparison compliance purposes for the park land west of the plant.

Response: "L_{90}" was chosen because it was the ambient noise descriptor used in the Proposed Regulations for the Prevention and Control of Environmental Conservation (NYSDEC). At the time the consultant's report was prepared, Con Edison believed that these regulations would be adopted. However, the proposed regulations were not promulgated and the NYSDEC has postponed further action.

Question III.7 In the estimation of offsite noise during construction activities, due almost entirety to trucking of excavation materials and concrete on and off site, no consideration has been given to the utilization of barges for rock removal or concrete delivery nor has the construction of an onsite concrete batch plant been considered. Discuss these various options with regard to how they could be expected to reduce the truck traffic to and from the site.

Response: Consideration was given to alternatives such as the utilization of barges for rock removal or concrete delivery, and construction of an onsite concrete batch plant. These alternatives were dismissed as not being feasible. Utilization of barges was rejected because of the lack of a suitable waterfront facility and interference with plant operations. No suitable location could be found for the concrete batch plant which would also require use of waterfront facilities.

With respect to off-site noise, some decrease would be expected. However, this decrease might be offset by construction and operation of on-site batch plant and barge facility, particularly operational noise emitted towards west shore areas.

Question III.8 Provide the time duration of each of the Community Noise Climate Test Samples in Table II of Appendix G. The Community Noise Climate Measuring Program was conducted over a period of seven days. For each measuring location where more than one sample was taken, state the number of different days that sample measurements were made. Provide this information individually for the day period and the night period for each location (e.g., location #10, 4 daytime measurements representing X different daytime periods, 3 nighttime measurements representing X different nighttime periods)..

Response: The time duration of each Community Noise Climate Test Sample was nominally 10-15 minutes.

The following is a tabulation of the date(s) during which daytime and nighttime measurement periods occurred and the corresponding location number.

Location No.	Period/Measurement Daytime	Nightime
1	1/3	1/1
2	1/4	1/1
3	1/3	1/1
4	1/5	1/2
5	1/4	1/2
6	1/2	1/5
7	1/5	1/2
8	1/5	1/2
9	1/3	2/3
10	1/4	2/2
11	1/5	2/3

Question III.9 Provide estimates of the frequency of occurrence of basin water salinity approaching 7,200 ppm and 14,400 ppm (NaCl), respectively, based upon a "two cycles of concentration" operation.

Response: Based upon a "two cycles of concentration" operation, a basin salinity of 7,200 ppm corresponds to a river salinity of 3,600 ppm, and a basin salinity of 14,400 ppm corresponds to a river salinity of 7,200 ppm. The saline content of the Hudson River in the vicinity of Indian Point varied from a maximum of 7,200 ppm (Indian Point Unit No. 3 ER, Section 4, Table-1) to a near freshwater value.

Monthly average freshwater flow rate data for the period 1918-1964 indicate ranges from 6,000 to 9,000 CFS for the July through October months. These flow rates correspond to 5,000 ppm to 3,000 ppm salinity. During the month of October, data for the years 1947-1972 show that a freshwater flow of 6,800 CFS or less occurred during approximately fifty percent of the years. This freshwater flow corresponds to a river salinity of 3,600 ppm or more. Thus, the basin salinity of 7,200 ppm represents the median salinity for October, and 14,400 ppm the highest basin salinity which would have occurred during the years data was

collected and analyzed. Therefore, the frequencies of occurrence of basin water salinity approaching 7,200 ppm and 14,400 ppm are estimated to be 50% and less than 1%, respectively.

Question III.10 Provide the rationale for selecting only the month of October for Figures 6-5 and 6-6.

Response: The month of October was chosen to illustrate size and approximate location of areas of potential botanical injury from cooling tower drift because October appeared on inspection to represent the fairly dry months when vegetation injury might occur. However, the potential for such injury is not restricted to the month of October, but could be expected to occur with only a slightly varying potential and location during any of the months, July through October. During these months river salinity remains high, rainless periods are frequent, and the monthly wind regimes are similar.

Question III.11. Provide a discussion on the predicted time of occurrence, areas or regions of occurrence, and predicted maximum deposition rates for natural-draft cooling towers and mechanical-draft cooling towers. Provide the maximum deposition rate for natural-draft towers and mechanical-draft cooling towers as predicted by the applicant's models in a form similar to Figures 6.5 and 6.6.

Response: For a natural draft cooling tower the maximum saline deposition rate predicted by the model would occur during the month of November. This maximum predicted rate, 985 $Kg/Km^2/Mo.$, would occur within the general area bounded by the 150 $Kg/Km^2/Mo$ isopleth shown in Fig. 6.5. For mechanical-draft cooling towers the maximum saline deposition rate predicted by the model, 1600 $Kg/Km^2/Mo$, would occur during the month of August at three locations, in the vicinity of Charles Point, a small portion of the Peekskill waterfront, and mid-river near Verplanck.

Question III.12 Provide a descriptive analysis of the vegetative habitat at the regions of maximum predicted salt deposition. This information need only be of reconnaissance-level type.

Response: A descriptive analysis of the vegetative habitat at the regions of maximum predicted salt deposition for both the mechanical-and natural draft cooling towers will be submitted to the Staff of NRC by the end of September, 1975.

Question III.13 Provide a discussion comparing the salinity deposition rates used in the Boyce Thompson Institute study with the maximum drift deposition rates predicted for mechanical-draft and natural-draft cooling towers by the applicant's mathematical models.

Response: The range of salt (NaCl) deposition rates used in the Boyce Thompson Institute study was 0.01 to 1.435 ug $Cl^-/cm^2/min$ which corresponds to a range of salt deposition rates approximately 10 $Kg/Km^2/Hr$ to 1400 $Kg/Km^2/Hr$. In comparison, the maximum salt deposition rates predicted by the mathematical models are approximately 36 $Kg/Km^2/Hr$ for the natural-draft cooling tower and 1,000 $Kg/Km^2/Hr$ for the mechanical draft cooling towers. Thus, the expected maximum deposition rates predicted by the models for both the natural-draft towers and mechanical-draft towers are included in the range of salinity deposition rates used in the Boyce Thompson Institute Study.

Question III.14 Provide estimates of the probabilities of 14-day zero rainfall and 30-day zero rainfall conditions (p. 6-24, 6-26) based upon meteorological records applicable to the region.

Response: The probability of zero rainfall for any 14 consecutive days during the period of highest drift salinity (July-October) has been estimated to be 0.42 each year based on meteorological data from Poughkeepsie, New York for the years 1926-1955 inclusive. The probability of 30 consecutive days without rainfall during this period is estimated to be only 0.013. These probabilities imply a 50 percent chance of 14 consecutive rainless days occurring three out of every four years, and 30 consecutive rainless days once every 50 years, respectively. A detailed examination of 12 years of daily rainfall records for Dobbs Ferry, New York revealed 20 periods of 10 or more consecutive rainless days. Nine of these periods were rainless for 14 or more days and two were rainless for 21 days or more. The longest rainless period was 24 days; there were no periods which were rainless for as long as 30 days. For this analysis, rainless periods included days when a trace of precipitation was recorded. It is believed that trace amounts of rainfall would not wash off the salt which accumulates on the vegetation.

Question III.15 Provide a discussion of the manner of interpretation of toxicity data in Appendix E used to predict 'potential botanical injury' in Table 6.1.

Response: A discussion of the manner of interpretation of toxicity data in Appendix E used to predict 'potential botanical injury' as stated in Table 6.1 will be submitted by the end of September, 1975.

Question III.16 Salt deposition of 896 kg/km^2/month is the average eleven-month value based upon the predictive model for natural-draft cooling towers (p. 6-15). However, Figures 6.8 and 6.9 were based upon lower values. Provide clarification of the use of these different values.

Response: The salt deposit rate of 896 Kg/Km^2/Mo was not used in the construction of Figures 6.8 and 6.9 because the salt deposition occurring coincident with an extended rainless period lasting 14 or more days is expected to be less than th value. The intent of Fig. 6.8 and 6.9 was to illustrate areas where potential botanical injury would correspond to the categories of potential botanical injury given in Table 6.1 during rainless periods of 30 days and 14 days. Figure 6.8 assumes the salt necessary to produce the stated level of injury would be deposited over the course of a month. Thus, the boundary of the single-hatched area in Figure 6.8 is the same as the boundary of the 40 Kg/Km^2/Mo isopleth (not shown) in Figure 6.5. The boundary of the double-hatched area of Figure 6.8 is identical to the boundary of the 100 Kg/Km^2/Mo isopleth of Figure 6.5. Figure 6.9 is based on the salt deposition which would occur in 14 days during a month when the monthly deposition rate is identical to Figure 6.5.

The boundaries of the single-hatched and double-hatched areas, which represent a total deposit in 14 days of 40 Kg/Km^2 and 100 Kg/Km^2 respectively, were obtained by proportionately scaling the isopleths of Figure 6.5. Were a prediction to be made based upon a total deposit of 896 Kg/Km^2, the description of the potential botanical injury would be similar to the description of potential injury in Table 6.1 for a deposit of >600 Kg/Km^2.

Question III.17 Provide a discussion of Figures 6.8 to 6.11 defining and explaining the descriptive term '<u>potential</u> botanical injury'. This discussion should include estimates of the frequency of occurrence of botanical injury as illustrated in Figures 6.8 to 6.11.

Response: The term '<u>potential</u> botanical injury' connotes that botanical injury is likely if the drift salinity is 7200 ppm or higher and if there is a coincidental rainless period of 14 days (Figures 6.9 and 6.11) or 30 days (Figures 6.8 and 6.10). The injury shown in Figures 6.9 and 6.11 is expected to occur with a probability of greater than 21 percent in any given year. There is a probability greater than 50 percent that the injury would occur at least once in three years. The extreme injury portrayed in Figures 6.8 and 6.10 would have no better than an even chance of occurring once in a hundred years. These probabilities were conservatively estimated by assuming that river salinity and duration of rainless periods are independent of one another. The combined probability of both high salinity and long rainless period is obtained by multiplying the probability of river salinity greater than 3600 ppm (approximately 0.5) by the probability of the specified rainless period. Since the river salanity actually correlates with the occurrence of drought, the probabilities of injury are even higher.

Question III.18 Provide any revisions to your report or to the conclusions of your report resulting from the inclusion of the meteorological data collection during September 1974 and after this date, in the data analyses.

Response: Incorporation of data for the month of September, 1974 into the annual calculations for salt deposition did not significantly alter the initial conclusions documented in the Indian Point Unkt No. 2 cooling tower report.

A complete year of on-site data was used in the analytical models terminating September 30, 1974.

Question III.19 Provide more legible copies of Tables 10 and 11 on pages 33 and 34 in Appendix A to your report.

Response: Tables 10 and 11, the daily meteorological readings for May 8 and May 9, 1974 are attached.

YORK RESEARCH CORPORATION JOB NUMBER: Y-8162
ONE RESEARCH DRIVE, STAMFORD, CONNECTICUT 06906

CLIENT: CON. EDISON
PLANT LOCATION: INDIAN POINT, NEW YORK
STATION NAME: INDIAN POINT - 4

Table 10, Appendix A, pg. 33

METEROLOGICAL READINGS REPORT

DATE OF DATA : MAY 8, 1974

HOUR ENDING AT	AMB TEMP DEG F 33'	DIFF TEMP DEG F 200-33	DIFF TEMP DEG F 400-33	DEW POINT 33'	DEW POINT 200'	DEW POINT 400'	WIND SPEED MPH 33'	WIND DIR DEG 33'	WIND SPEED MPH 125'	WIND DIR DEG 125'	WIND SPEED MPH 283'	WIND DIR DEG 283'	WIND SPEED MPH 400'	WIND DIR DEG 400'	VISIB FT	NET RAD
100	39.0	2.5	5.9	33.0	33.0	26.0	2.5	60	3.5	45	4.0	325	8.0	325	88888	360
200	38.0	3.0	4.0	32.0	32.0	30.0	3.0	90	3.5	50	2.0	260	4.0	295	88888	360
300	37.5	2.9	4.7	31.0	32.0	28.0	2.0	70	2.5	45	3.0	325	6.0	330	88888	360
400	37.5	3.5	4.3	31.0	30.0	26.5	2.5	60	3.5	15	5.0	310	7.0	320	88888	360
500	37.0	1.5	2.8	30.0	31.5	29.5	2.0	125	1.5	150	2.0	280	4.0	310	88888	360
600	36.5	2.1	1.9	30.5	29.5	29.5	1.0	444	3.0	105	2.0	444	2.0	315	88888	395
700	43.5	-.7	-.7	31.5	30.0	29.5	2.5	45	3.5	20	5.0	355	6.0	345	20000	455
800	48.0	-1.4	-1.8	26.0	27.5	27.0	3.5	444	4.5	20	6.0	5	4.5	10	88888	520
900	50.5	-2.0	-2.5	25.5	25.5	23.0	3.5	295	6.0	290	7.5	290	7.0	295	88888	670
1000	52.5	-1.6	-2.4	23.5	22.5	22.0	4.0	270	5.0	260	6.0	270	5.5	285	88888	750
1100	54.5	-1.7	-2.2	23.0	22.5	22.0	4.0	15	5.0	10	2.5	444	4.5	25	88888	785
1200	57.0	-2.3	-2.2	23.5	22.5	21.5	4.5	235	5.0	205	6.0	205	6.0	200	88888	800
1300	59.5	-2.2	-2.1	21.5	20.5	20.5	3.0	235	3.5	220	5.5	200	4.5	210	88888	785
1400	63.5	-4.1	-3.5	20.5	17.5	17.0	3.0	185	6.5	175	7.0	185	6.5	195	88888	740
1500	64.5	-4.5	-3.5	22.0	19.5	19.0	2.5	190	6.5	175	7.0	180	7.0	190	88888	685
1600	61.0	-2.6	-2.5	34.0	33.0	30.5	4.5	175	11.5	170	16.0	175	16.0	175	88888	485
1700	60.0	-2.4	-2.5	35.0	34.0	33.0	5.5	185	15.5	175	19.0	185	20.5	185	88888	480
1800	55.5	-1.3	-1.5	35.0	34.5	33.5	4.5	180	13.0	170	18.0	180	18.5	180	88888	400
1900	53.5	-.3	-.5	35.5	35.5	34.0	3.0	180	10.0	170	14.0	175	14.5	180	88888	360
2000	52.5	.1	-.6	35.5	35.5	34.5	3.0	180	9.0	175	12.5	180	13.5	185	88888	360
2100	51.5	.5	-.2	36.0	35.5	34.5	2.0	190	7.5	185	11.0	195	12.0	195	88888	365
2200	51.0	.6	0.	33.5	33.0	32.0	1.5	185	7.5	180	11.5	185	13.0	190	88888	365
2300	51.0	.4	-.3	34.5	34.0	33.5	3.0	205	6.5	205	8.0	205	10.0	200	88888	370
2400	49.0	.5	.1	33.0	34.5	35.5	1.5	95	2.5	444	4.5	250	4.0	215	88888	385

Table 11, Appendix A, pg. 34

DATE OF DATA : MAY 9, 1974

HOUR ENDING AT	AMB TEMP DEG F 33'	DIFF TEMP DEG F 200-33	DIFF TEMP DEG F 400-33	DEW POINT 33'	DEW POINT 200'	DEW POINT 400'	WIND SPEED MPH 33'	WIND DIR DEG 33'	WIND SPEED MPH 125'	WIND DIR DEG 125'	WIND SPEED MPH 283'	WIND DIR DEG 283'	WIND SPEED MPH 400'	WIND DIR DEG 400'	VISIB FT	NET RAD
100	48.0	.6	.3	34.5	36.5	37.5	1.0	135	2.5	170	6.0	185	8.0	190	88888	370
200	47.0	1.1	.9	38.0	38.5	38.5	1.0	165	4.0	150	6.5	170	9.0	180	88888	370
300	47.0	1.4	.8	39.0	39.0	39.0	1.0	180	5.0	175	7.5	175	8.0	180	88888	370
400	46.5	.7	.5	41.5	40.5	40.5	2.0	30	1.5	444	2.0	180	5.5	185	88888	370
500	46.0	.7	.7	41.5	41.5	41.5	1.5	30	2.0	25	2.0	205	3.5	190	88888	370
600	46.0	1.1	1.7	41.0	41.0	41.0	3.5	55	4.5	45	1.5	65	2.5	135	88888	405
700	47.5	-.8	-.8	41.0	41.0	40.5	3.5	40	4.5	40	5.0	50	3.5	90	88888	435
800	50.5	-1.2	-1.5	42.0	42.0	42.0	2.0	295	2.5	280	2.0	270	2.0	255	77777	550
900	55.0	-1.5	-1.6	44.5	44.0	44.0	4.0	235	6.5	205	5.5	220	10.0	195	88888	630
1000	61.0	-2.9	-3.4	46.5	46.0	45.5	5.5	205	11.0	185	10.0	185	12.5	190	88888	720
1100	64.5	-3.5	-3.8	46.5	45.0	44.5	6.5	185	15.5	175	17.0	180	16.5	175	88888	760
1200	62.5	-1.9	-2.2	47.0	47.0	46.5	4.5	180	11.5	170	17.0	170	15.5	175	88888	455
1300	61.0	-1.0	-1.3	49.0	48.5	48.0	4.0	185	11.0	175	15.0	175	18.0	180	88888	440
1400	61.0	-1.0	-1.3	50.0	49.5	48.5	4.0	185	14.0	170	18.0	175	19.0	175	88888	460
1500	62.5	-1.1	-1.5	46.5	46.0	45.0	5.5	185	16.5	175	20.0	175	23.5	180	88888	430
1600	60.5	-.5	-.9	46.5	46.0	45.0	5.0	180	14.0	170	20.0	175	20.0	170	88888	430
1700	59.5	-.7	-1.4	45.0	45.0	44.5	4.0	175	10.0	160	16.0	155	16.0	160	88888	410
1800	56.5	-.6	-1.3	45.0	44.5	44.0	4.5	200	11.0	175	12.0	160	15.0	170	88888	405
1900	53.0	.9	.5	50.5	49.0	47.5	1.5	175	6.0	165	12.0	175	9.5	165	20000	260
2000	51.5	.2	-.5	50.0	48.5	47.5	1.5	160	5.5	145	7.0	155	10.5	145	77777	275
2100	50.0	-.4	-1.2	49.0	48.5	48.0	2.0	444	4.0	135	6.0	125	6.5	130	19000	285
2200	49.5	-.3	-1.1	48.0	48.0	47.5	1.0	444	2.0	444	6.5	95	5.0	100	12000	315
2300	49.0	-.3	-1.1	47.5	47.5	47.0	1.5	444	2.0	444	5.0	80	5.5	145	10000	315
2400	49.0	-.2	-.9	47.5	47.5	47.0	1.5	85	3.0	110	6.0	125	6.0	115	20000	330

METEOROLOGICAL DATA FORMAT
400' TOWER

NOTE: Two data cards per observation sequence

Card 1 (column 70=1)

Columns	Information
1-5	Identification - Indian Point 400' Tower
6-7	Year (1973=73)
8-9	Month of the year (01=January)
10-11	Day of the month (01-31)
12-13	Hour of the day (EST)
14-15	Blank
17-19	33' Ambient temperature (^{o}F) x 10
22-24	200'-33' temperature (^{o}F) x 10
27-29	400'-33' temperature (^{o}F) x 10
32-34	33' Dewpoint temperature (^{o}F) x 10
37-39	200' Dewpoint temperature (^{o}F) x 10
42-44	400' Dewpoint temperature (^{o}F) x 10
47-49	33' Wind speed (mph) x 10
51-53	33' Wind direction (degrees)
55-57	33' Maximum wind direction (degrees)
58-60	33' Minimum wind direction (degrees)
62-64	125' Wind speed (mph) x 10
66-68	125' Wind direction (degrees)
69	Blank

Card 2 (column 70=2)

Columns	Information
1-5	Identical to card 1 information
6-7	"
8-9	"
10-11	"
12-13	"
14-15	"
16-18	125' Maximum wind direction (degrees)
19-21	125' Minimum wind direction (degrees)
23-25	280' Wind speed (mph) x 10
27-29	280' Wind direction (degrees)
31-33	280' Maximum wind direction (degrees)
34-36	280' Minimum wind direction (degrees)

Columns	Information
38-40	400' Wind speed (mph) x 10
42-44	400' Wind direction (degrees)
46-48	400' Maximum wind direction (degrees)
49-51	400' Minimum wind direction (degrees)
52-56	Visibility (feet)*
58-60	Blank
62-64	Net Solar radiation (millivolts) x 10 **
65-69	Blank

* Visibility = 88888 defines visibility of greater than 20,000 ft.
  Visibility = 77777 defines visibility of at least 20,000 ft.

** Conversion from millivolts to cal/cm^{2}min

400 millivolts = 0 cal/cm^{2}min

For each increment of 0.5 above or below 40 mv, add or subtract, as the case may be, 0.01855 to (or from) 0 cal/cm^{2}min

Example: 99 mv = +2.207 cal/cm^{2}min
((99-40)/(0.5)) x 0.01855 = 2.207

0 mv = -1.484 cal/cm^{2}min
((40-0)/(0.5)) x 0.01855 = -1.484

Any data consisting of all 9's (999) defines an instrument malfunction

Question III.20 In Appendix A provide copies for the list of Appendices (A-N and I,II). In particular, provide copies of Appendix I - Meteorological Tower Data: October 1, 1973 to August 31, 1974 and Appendix II - Meteorological Tower Data: September, 1974.

Response: Appendices A-N of the York Research Corporation report (Appendix A) are being furnished to the Commission Staff with this submittal. Appendices I and II which are the daily meteorological parameter listings, are being furnished to the Commission Staff with this submittal in the form of magnetic tape. The magnetic tape is a 9 track, 1600 BPI EBCDIC, odd parity. Data on the tape consists of a logical record for each original two data card set. The format of the data is attached.

Question III.21 On pages 2-4 and 2-9, Vol. 1 of the ER, a fan-assisted wet natural-draft tower is briefly discussed and rejected. There is no evidence in the ER that a circular mechanical-draft system was considered.

a. Provide details of whatever information was used, including references to consulting or documentary sources, which led to the conclusion that the fan-assisted wet natural-draft tower and circular mechanical-draft tower should be rejected or excluded as viable alternatives.

b. In the absence of specific engineering design studies on the fan-assisted natural-draft tower or circular mechanical-draft tower alternatives, provide ball park "guesstimates" on the following impact factors to the extent these are not already included in response to question (a). Please give high and low estimates as well as the most probable estimate.

(1) Capital and O & M costs of the two alternatives.

(2) Energy penalties of the two alternatives relative to the proposed natural-draft tower.

(3) Reliability factors relative to the proposed natural-draft tower and other risk aspects of technological performance.

(4) Profile dimensions (height and width) of the two alternatives and any other factors in comparison of aesthetic impacts to those of the proposed natural-draft tower.

(5) Provide estimates with documentation of noise impacts of the two alternatives for residential areas and recretional uses within a two-mile radius of the towers.

Response: a. The reasons that Con Edison considered neither the fan-assisted natural draft nor the circular mechanicl draft cooling tower as feasible cooling alternatives for Indian point Unit No. 2, are already stated in answering Question I-2.

There are about 3,000 steam electric generating units in the United States; 200-300 units are in operation with linear mechanical draft wet cooling towers. About 60 units use, or have been designed for natural draft wet cooling towers (W. H. Donnelly, "The Administrative Heat Rejection in the United States," presented at the joint US/USSR meeting on Heat Rejection Systems, Washington, D.C., June, 1974.) Only one Marley circular mechanical draft cooling tower is operating (since early spring of 1975 at the Jack Waston plant of Mississippi Power Company) and no fan-assisted natural draft cooling tower is either under construction or in operation in the United States. At the time of preparation of the Indian Point Unit No. 2 cooling tower report, no actual field data on either construction, erection, operation or maintenance of fan-assisted natural draft and circular mechanical draft cooling tower were available

for a comprehensive evaluation on economic and environmental impacts. Therefore, these systems were not included in the Indian Point Unit No. 2 cooling tower report as feasible alternatives. Although Con Edison will continue its effort to seek additional information on these two and any other developing cooling systems for further evaluation, it should be noted that any such alternative cannot be designed and constructed within the time constraints of the present license.

b. (1) Based on the thermal design criteria specified for Indian Point Unit No. 2 natural draft wet cooling tower (See Table 3-1 in the Indian Point Unit No. 2 cooling tower report), the cooling tower manufacturers estimated the costs of fan-assisted natural draft and circular mechanical draft cooling towers to be as compared to $10,372,000 for natural draft wet cooling tower and $7,000,000 for linear mechanical draft wet cooling towers. Thus the cost estimates would appear to be the same order as those submitted in the Cooling Tower Report except that additional excavation would

$8,900,000 and $7,000,000, respectively, appear to be required.

O & M costs are usually developed on the basis of performance records. With no such data available, one might assume the O & M costs of linear and circular mechanical draft cooling towers are comparable, and that of a fan-assisted natural draft tower is considerably higher than that of a conventional natural draft tower because multiple induced fans would re-require additional O & M expenditure.

It is not proper to provide additional cost information without substantial engineering analysis, including engineering layout, piping requirements, pumping requirements, turbine derating and other factors which have a significant impact on costs. We do not believe that "ball park guesstimates" are appropriate for a benefit/cost analysis.

b. (2) The annual averaged total derating due to closed-cycle cooling operation is estimated to be 25 MWe for a natural draft tower (See Table 3-3 in the Indian Point

Unit No. 2 cooling tower report), 30 MWe for fan-assisted natural draft towers and 38 MWe for circular mechanical draft towers.

b. (3) As explained in answering question III-21-a above, the reliability and performance of fan-assisted natural draft and circular mechanical draft cooling towers can not be analyzed without actual performance records; however, because they have motor driven fans, both fan-assisted natural draft and circular mechanical draft cooling towers are considered to be inferior to natural draft cooling towers with respect to reliability and other risk aspects of performance.

b. (4) Based on the thermal design criteria identified in the answer to question III-21 b (1), two fan-assisted natural draft or two circular mechanical draft cooling towers are required for Indian Point Unit No. 2. The dimensions of each fan-assisted natural draft tower are about 270 feet in base diameter and 210 feet overall height. The dimensions of of each circular draft tower are about

290 feet in base diameter and 70 feet overall height.

Aesthetic impact (due to tower structure alone) of a single 560 foot tall natural draft cooling tower may be greater than the lower profiles of two fan-assisted natural draft or circular mechanical draft cooling towers. Both of these suggested alternatives still exceed the height limitations of the Buchanan Zoning Code.

b. (5) Because circular mechanical draft cooling towers are expected to use fans whose noise emissions are estimated to be similar to the noise emission characteristics of the fans reported in the linear mechanical draft cooling towers, the noise emissions are expected to be about the same. Fan-assisted wet natural draft towers use fans which are positioned around the tower base, therefore, noise emissions are expected to be directly outward from the base as opposed to mechanical draft cooling towers which direct noise upward. We would expect

fan-assisted wet natural draft tower noise emissions to be about 5-10 dB(a) higher than those from linear mechanical cooling towers. There are no published reports which would permit "documentation" of this estimate.

Documentation of noise impacts for areas within a two-mile radius of the alternative towers is not possible. The tower locations for alternatives suggested in the above question are unknown. Therefore, the sound radiation characteristics of these alternatives is unknown. Furthermore, the cooling tower noise study is based on community ambient noise measurements made within one mile, where change in community noise could potentially occur, due to operation of alternative cooling systems.

Question III.22 The treatment of incremental generating costs in Section 5.3 is too terse for adequate staff evaluation. Focusing on Tables 5-5, 5-6 and 5-7, provide further elaboration in the form of supporting data, calculations and assumptions. Be sure to treat the following in detail.

a. Provide the most recent peak load, installed capability, and purchase and sales forecasts. Analyze the extent to which any resulting change in the reserve margins (both summer and winter) will cover the system generating capacity needs during the tie-in period and the lost capacity over the period of operation.

b. Recent reports by the National Electric Reliability Council and the New York Power Pool (NYPP) indicate that high reserves are expected at least through the mid-1980's in the Northeast Power Coordinating Council (NYCC) and the NYPP. For both the tie-in period and the operating period thereafter, provide an analysis of the potential for purchase power from neighboring systems and estimate the cost of that purchase power.

c. Provide an analysis of the feasibility of a winter 1977-78 and a winter 1978-79 tie-in including cost differentials and alternative sources of replacement energy.

d. Identify the 1980 fuel and operating and maintenance costs for large fossil fueled units in the applicant's system and for IP-2 in dollars per KWHR.

Response

a. The most recent peak load and total capacity resources (the net of installed capacity, firm purchases and sales) for the summers of 1979 and 1981, and an analysis of the extent to which any resulting change in the reserve margins will cover the system generating capacity needs during the tie-in period were

included in the Reliability Impact (Section 4.1.2.2 pages 4-21 to 4-26) of the Environmental Report to Accompany Application for Facility License Amendment for Extension of Operation with Once-through Cooling for Indian Point Unit No. 2, June 1975, Consolidated Edison Company of New York, Inc.

As discussed in the above referenced report, a winter outage of Indian Point Unit No. 2 to tie-in in a closed cycle cooling system is preferable from a reliability viewpoint to a summer outage. There is a large diversity on the Con Edison system between summer peak load and winter peak load. A seven month long outage of an 873 MW unit cannot but reduce reliability of system operations and complicate or curtail planned maintenance. In spite of problems, a winter tie-in outage would be more manageable in comparison to a summer outage.

It is not meaningful to attempt to relate system generating capacity needs to the lost capacity (due to cooling tower deratings) over the entire period of operation.

Load and capacity plans

have not been formulated to the year 2003 to coincide with the 30 year economic life used for Indian Point Unit No. 2 in the reports and, even if such plans were formulated, they would be highly speculative, at best. The summer capacity derating caused by Indian Point Unit No. 2 natural draft tower will be 63 MW based on the design tempertures reflected in the Company's forecast of annual peak load. The winter derating will be lower.

Con Edison wrote in the report that it would replace with gas turbines the capacity loss through derating and replaced the energy lost through derating by the generation mix of the Con Edison system; predominantly from base load units. Winter deratings would be replace by whatever capacity replaced the larger summer derating. This was solely for the purpose of economic analysis of the derating on a basis of the lowest cost possible. Con Edison considers that the reliability problem caused by these long-term deratings, while serious, is minor compared to the reliability problem caused by the tie-in outage.

The attached 10 year load and capacity table (Table S1-2) was the basis for the Reliability Impact discussion included in the referenced Environmental Report for the License Amendment, June 1975 except for scheduling the upratings of Indian Point Units 2 and 3 - 160 MW and 68 MW, respectively - prior to the Summer of 1972 (See Section 4.1.1.2).

It provides the load and capacity information requested and is substantially the same as the Long Range Plan submitted by the member companies of the NYPP as part of the April, 1975 149-b Report to the NYS Public Service Commission. The principal exception is the change in the schedule for the initial service date of the PASNY MTA 1 plant. Based on delays in the licensing process evident to date, it was assumed that the plant would not be available until after the 1981 summer peak. The load and capacity table shows the upratings on Indian Point Units No. 2 and 3 anticipated to occur on the following schedule:

Indian Point Unit No. 2 = 160 MW prior to the 1974 Summer

Indian Point Unit No. 3	=	92 MW prior to the 1978 Summer
	=	68 MW prior to the 1980 Summer

Since these upratings are dependent on new NRC licensing actions and may even be subject to hearings, the actual dates of NRC approval could be later than shown. Accordingly, the anticipated reserves could be lower than now projected.

Con Edison is currently working on a revised load and capacity plan that will differ from the June plan in two minor respect: first, it will incorporate minor reductions of existing capacity and of the purchases from Astoria No. 6, Hydro-Quebec and in later years, Fitzpatrick, and second, it will show significantly increased steam deratings for each year of the 10 year plan.

Con Edison is among utilities due to the fact that it has a franchise for the distribution of steam, with service throughout much of Manhattan. Much of the supply for the steam system is integrated with the electric generating stations. Steam deratings at

the time of the electric system peak arise when combined steam-electric stations are required to reduce electric output in order to maintain an adequate steam supply to the steam system. Recent delays in the schedules for new steam boilers for the steam system have increased the requirments for steam supplied

by the electric system. Deratings of the electric system in order to supply steam to the steam system at the time of the electric system summer peak load for the period from 1975 through 1984 will range from about 200 MW to about 300 MW. These additional steam deratings will reduce the reserves on the Con Edison system for the next decade.

b. For the tie-in period, the above referenced Environmental Report for the License Amendment, June, 1975, in Section 4.1.2.2.3, pages 4-24 to 4-26 discusses the difficulty in assuring the availability of a firm purchase for a single capacity period or for multiple periods this far in advance as new capacity is subject to construction and licensing delays, and as the availability of potential sales is subject to possible changes in load

growth patterns. This is particularly true now, when many companies are having finanical problems which could require a re-assessment of schedules for new capacity additions. Also, the current forecasts of peak load reflect initial efforts at conservation undertaken by the public as a reaction to the 1973-74 oil crisis and the current depressed state of the economy.

To the extent that the conservation ethic does not persist at current levels, or that the economy improves, the current forecasts of peak load could be an understatement of actual conditions. Accordingly, for many reasons, the reserve margin shown in the long term projections could be reduced substantially.

Con Edison is a joint owner of four fossil units, 400 MW from Bowline Point No. 1, 400 MW from Bowline Point No. 2 and 480 MW from Roseton Units 1 and 2. Con Edison also expects to purchase from the PASNY Fitzpatrick nuclear unit in declining amounts from about 250 MW when the unit became commercial to about 100 MW in 1983. Con Edison is scheduled to receive about 600 MW in long term capacity from Hydro-Quebec starting in 1977.

Con Edison will share in pumped storage fossil and nuclear facilities to be constructed by PASNY totalling 2400 MW in the 1981-1984 period. Con Edison is making every efffort to maximize long term purchases of capacity. However, construction lead times make it impossible to undertake, at this time, the construction of new base load units, not already authorized for service, by the summer of 1979. Only gas turbines could be installed in this time frame.

During a winter tie-in outage of Indian Point No. 2 Con Edison would also resort to supplemental and emergency purchases during periods of high peak load or high unavailable capacity. These short term purchases would also be utilized in a summer tie-in period if available. However, in the summer period there is greater likelihood that it would be necessary to resort to voltage reductions and load curtailments. In the winter period, at times of high load or high unavailable capacity, advantage can be taken of some flexibility in scheduled maintenance (returning units to service early or delaying the start of maintenance on some units), as well as of short term purchases. Moreover, it is expected

that after maintenance outages more reserve will remain in the winter to provide for unscheduled outages than in the summer.

As noted above, the cost of the long term derating was analyzed on the basis of the lowest possible cost. It is not possible to predict at this time the availability of purchased power but the cost of such power, if available, would not have a significant effect on the total cooling tower costs presented in the report.

c. "The AEC Licensing Schedule" (Figure 4.2 in the Indian Point Unit No. 2 cooling tower report) was developed on the basis of the earliest possible construction schedule of a cooling tower for Indian Point Unit No. 2. Therefore, it is not feasible to consider a tie-in of the preferred closed-cycle cooling tower system prior to May, 1979.

In the winter of 1977-1978 (or the period from 9/1/77 to 3/1/78) construction would have encompassed only the excavation of the site and completion of the foundations and supports for the tower shell or veil. Because of long lead times required for fabrication and delivery, it is unlikely that

any of the major equipment including pumps, piping and electrical gear would be installed. In the winter of 1978-79 (or the period from 9/1/78 to 3/1/79) the tower shell or veil would have been completed, and installation of the fill structure started. However, the tower would be far from complete since the hot water distribution system, the fill and drift eliminators would not have been installed. In addition, the external piping, mechanical, instrumentation and electrical systems would not be complete and under no circumstances could a tie-in be initiated.

In view of the impossibility of considering a tie-in of the closed-cycle cooling system during the winter periods identified above, it is meaningless to evaluate cost differentials and alternative sources of replacement energy for these periods.

d. For 1980, the fuel and operating and maintenance costs for large fossil units on the Con Edison system (average of units with more than 300 MW capacity, including Astoria 6 and jointly owned units) are estimated to total $28.92 per MWHR. The fuel and operating and maintenance costs for Indian Point Unit No.2 are estimated to total $4.15 per MWHR.

It is not possible within the time constraints of this response to provide the supporting data for all the calculations in Tables 5-5, 5-6 and 5-7. It is suggested that either more specific questions be furnished or a conference be arranged to discuss these calculations. The material furnished above together with pp. 5-1 through 5-25 of the Indian Point No. 2 cooling tower report describe the assumptions used in these calculations.

Table S1-2

June 1975

CONSOLIDATED EDISON COMPANY OF NEW YORK, INC.

PLANNED CAPACITY, LOAD, AND RESERVE - SUMMER PROGRAM

	1975	1976	1977	1978	1979	1980	1981	1982	1983	1984
Existing Installed Capacity	9936	10159	11032	10898	11090	11130	11096	11082	11019	10899
New Capacity and Retirements										
Indian Point No. 1	-257			257						
Indian Point No. 2					160					
Roseton Nos. 1 and 2	480				-120	68			-120	
Indian Point No. 3		873		92						
Cooling Tower Deratings						-63		-63		
Retirements and Cold Standby			-134	-157		-39	-14			
Total Installed Capacity	10159	11032	10898	11090	11130	11096	11082	11019	10899	10899
Purchased Capacity										
PASNY Astoria No. 6			800	800	800	800	800	800	800	800
PASNY Breakbeen							500	500	500	500
Hydro-Quebec			605	605	605	605	605	605	605	605
PASNY Fitzpatrick	251	186	175	172	161	150	139	128	117	
PASNY MTA Plant 1								700	700	700
PASNY MTA Plant 2									1200	1200
Other - Firm	243	34								
Total Purchases	494	220	1580	1577	1566	1555	2044	2733	3922	3805
Total Capacity Resources	10653	11252	12478	12667	12696	12651	13126	13752	14821	14704
Steam Derating	-106	-94	-101							
New Capacity Resources	10547	11158	12377	12667	12696	12651	13126	13752	14821	14702
Estimated Peak Load	8600	8800	9100	9400	9700	10075	10450	10825	11175	11550
Reserve - MW	1947	2358	3277	3267	2996	2576	2676	2927	3646	3154
- %	22.6	26.8	36.0	34.8	30.9	25.6	25.6	27.0	32.6	27.3
Reserve with Largest Unit Delayed One year - MW	1947	1485	2477	3010	1963*	2508	2176	2227	2446	315
- %	22.6	16.9	27.2	32.0	20.2*	24.9	20.8	20.6	21.9	27.3

* Reserve with Indian Point Unit No. 2 removed from serive for cooling tower cut-in.

Question III.23 Provide an explanation for the difference between the deratings given for the natural-draft alternative from the following sources:

	IP-2 Cooling Tower Report	IP-3 ER
Average Annual Derating	25 MW	38 MW
Peak Ambient Temperature Derating	63 MW	83 MW

Response: The primary reason for the difference between the deratings identified in the question is the design criteria specified for the Indian Point Unit No. 2 and Indian Point Unit No. 3 cooling towers are different. The following are some specific design differences which affect the deratings:

(1) Design cooling water flow - cooling water flow rate designed for Indian Point Unit No. 2 and Indian Point Unit No. 3 cooling towers are 600,000 and 870,000 gpm, respectively. Pumping requirement increases with increasing water flow rate.

(2) Design wet-bulb temperature - Wet-bulb temperatures designed for Indian Point Unit No. 2 and Indian Point Unit No. 3 cooling towers are 74 and 77 F, respectively. The design wet-bulb temperatures will affect the thermal performance of cooling tower and

indirectly affect the turbine capacity on closed-cycle cooling operation.

(3) Cooling water piping system - The Indian Point Unit No. 2 closed cycle cooling system (Figure 3.4 in the Indian Point Unit No. 2 cooling tower report) is designed to recover the gravitation force of cooling water so that the pumping requirement of the system is minimized. The Indian Point Unit No. 3 closed-cycle cooling system (Figures 7-7 and 7-10 in the Indian Point Unit No. 3 - ER), due to different terrain characteristic, is not designed to recover any pumping head. Therefore, the pumping requirement for Indian Point Unit No. 2 cooling system is smaller than that for Indian Point Unit No. 3 cooling system.

It is noted that conceptual designs of Indian Point Unit No. 2 and Indian Point Unit No. 3 cooling tower systems, were described, respectively, in the Indian Point Unit No. 2 ER supplement 3 dated February, 1972 and the Indian Point Unit No. 3 ER dated September, 1972. The conceptual design for Indian Point Unit No. 2

has since been subjected to critical review during the detailed design effort and as a result have been made of optimization studies. Therefore, the latest Indian Point Unit No. 2 natural draft cooling tower system analyzed in the Indian Point Unit No. 2 cooling tower report dated December, 1974, is not comparable to the Indian Point Unit No. 3 natural draft cooling tower system. The Indian Point Unit No. 3 natural draft cooling tower system is presently being reviewed.

Question III.24 Provide estimates of the costs of the sound mitigation measures discussed in item 4 of "Noise Study" above. Briefly describe how sound mitigation measures for fan-assisted natural-draft and circular mechanical draft will differ from the three alternatives discussed in Item 4 "Noise Study" above and indicate the likely cost differentials.

Response: At this time, the costs of noise reduction methods discussed in Question III.3 are not known. However, noise control of small fan assisted hyperbolic cooling towers (150 MW) and accessories was reported* to double the tower cost. As stated in Response III.3., we are not aware of any practical and feasible noise control methods for the large type of cooling tower suitable for Indian Point Unit No. 2.

---

* Sommer, W., "Electricity Supply Undertakings and Protection of the Environment", Elektrizitatswirtschaft, Vol. 72, No. 18, 1973, Bonneville Power Administration Translation No. 372.

Question III.25 Provide a supplement to the ER which displays a photographic study of the visual impact of the alternative cooling systems including natural draft, mechanical draft wet, mechanical draft wet/dry, fan-assisted natural draft and circular mechanical draft. The study should include the vantage points listed in Table 6-10. In addition, the study should be expanded to include typical or sensitive vantage points within Peekskill, Buchanan, Verplanck and the Town of Cortlandt. The degree of visual impact from surrounding parks, scenic overlooks, and historical places listed in the National Register of Historic Places should be assessed and where the visual impact might reasonably be considered significant for any of the alternative cooling systems a photographic study should be prepared. The study should provide 8x10 color photographs, one before the alternative cooling system is installed, plus others touched up to represent, at appropriate scale, the five cooling systems alternatives (including their most frequency occurring plume configuration) from at least 10 most impacted vantage points. Additionally, photographic comparisons should be made for a number of the most important scenic vantage points where the systems are visible but where the impact would be considered acceptable. Describe the frequency, duration and seasonal pattern of occurrence of the most typical plume for each alternative. Provide a map indicating the location of the vantage points selected and an estimate of the resident or transient population impacted yearly at each vantage point.

Response: The request for a photographic study of the alternative cooling systems (as stated in Question III.25) was reduced in scope by the Commission Staff during a telephone conversation with Con Edison on July 23, 1975*. Three alternative cooling systems are to be assessed; a natural draft wet cooling tower, linear

* Dr. Miller Spangler, Commission Staff and Michael Blatt of Con Edison

mechanical-draft wet towers and a fan-assisted natural draft cooling tower. The Company has conducted a review of methodologies for performing the requested photographic survey and evaluation and has contacted several firms that could provide the needed services to respond to Question III.25 and III.26.

Possible contractors for such services have indicated in conversations with Company personnel that the photographic survey and overlays could be available by mid-October, 1975. The evaluation requested in Question III.26 would be available by about the end of October, 1975.

Question III.26 Provide an assessment of the visual impact of the cooling system alternatives based on the above photographic study and using the methodology described in a report prepared by the Battelle Pacific Northwest Laboratories[1] or an equivalent methodology.

Response: See response to Question III.25.

[1]Burhan, J. B. et. al., A Technique for Environmental Decision Making Using Quantified Social and Aesthetic Values, BNWL-1787, UC-11, prepared for the U. S. Atomic Energy Commission, February 1974, pp. 64-147.

Question III.27 Provide a map indicating the population exposed to a line of sight relationship to the tallest tower alternative in one mile annular rings within the 16 cardinal compass points radiating from the site up to a ten-mile distance from the plant.

Response: A map indicating the population exposed to a line of sight relationship to the tallest tower alternative as specified in Question III.26, will be submitted to the Staff of NRC by the end of September, 1975.

Question III.28 Provide a vertical cross-section of each of the alternative cooling towers showing the estimated elevations of the discharge sprayers, the fill, sump and grade level used in estimating the pumping requirements for the cooling tower systems.

Response: Figures S1-1 through S1-5 show the vertical cross-section of each of the five cooling towers showing the estimated elevations of the discharge sprayers, the fill, sump and grade levels. The tabulated sump level is the level of the invert of the cold water basin.

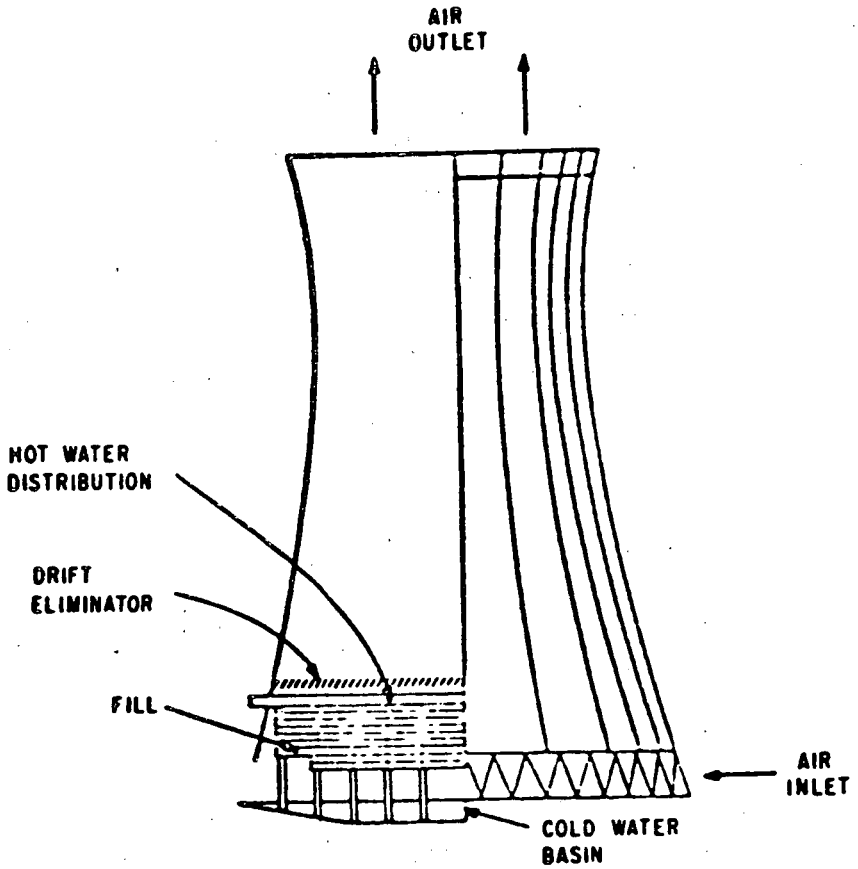

Sprayer Discharge Elevation	110 Feet MSL
Top of Fill, Elevation	108 Feet MSL
Bottom of Basin, Elevation	45 Feet MSL
Grade Elevation	53 Feet MSL

Fig. S1-1

NATURAL-DRAFT WET COOLING TOWER
(COUNTER-FLOW)

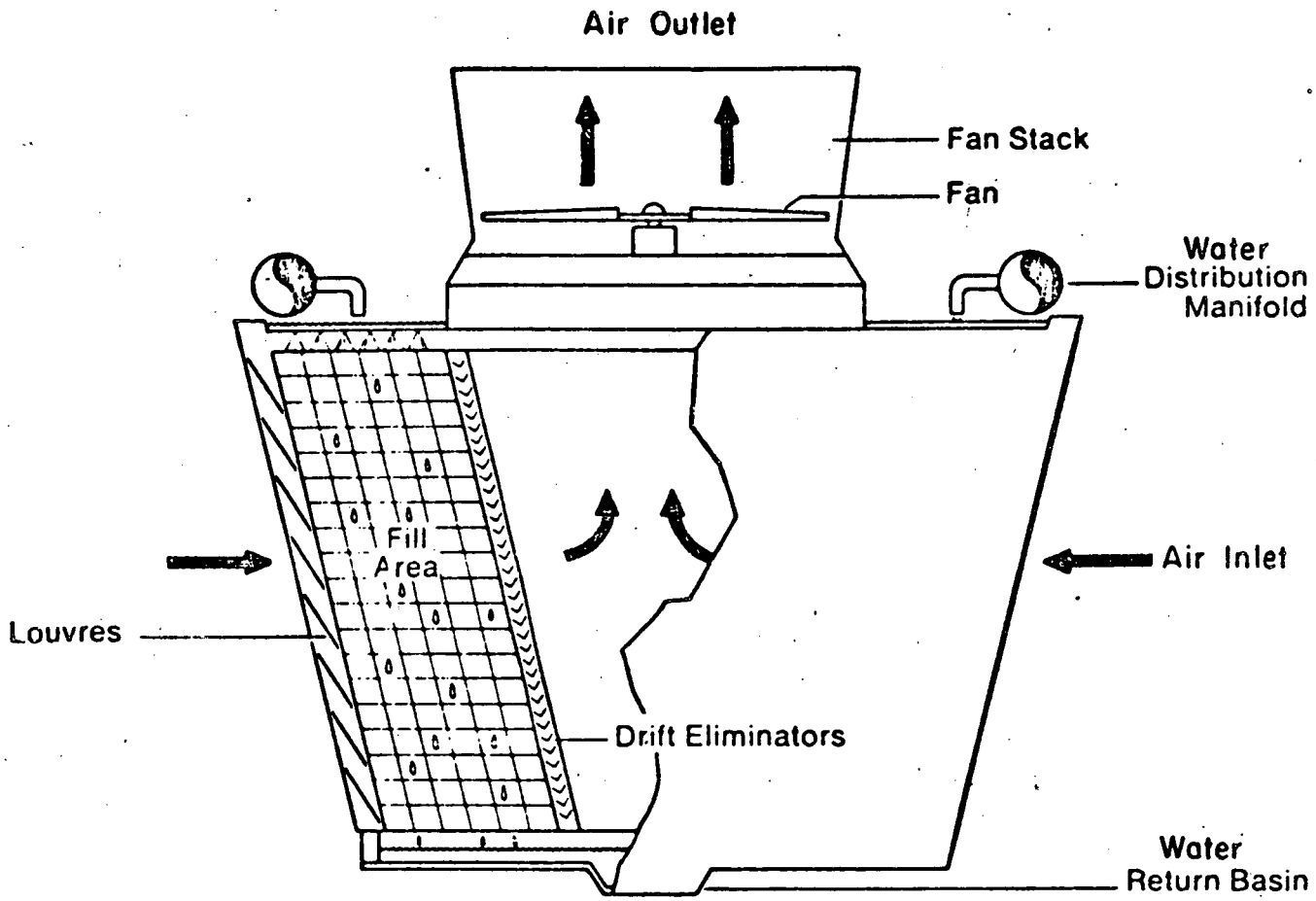

Fig. S1-2

MECHANICAL-DRAFT WET COOLING TOWER
(CROSS FLOW)

Sprayer Discharge Elevation	90 Feet	MSL
Top of Fill Elevation	89 Feet	MSL
Bottom of Basin, Elevation	32 Feet	MSL
Grade Elevation	40 Feet	MSL

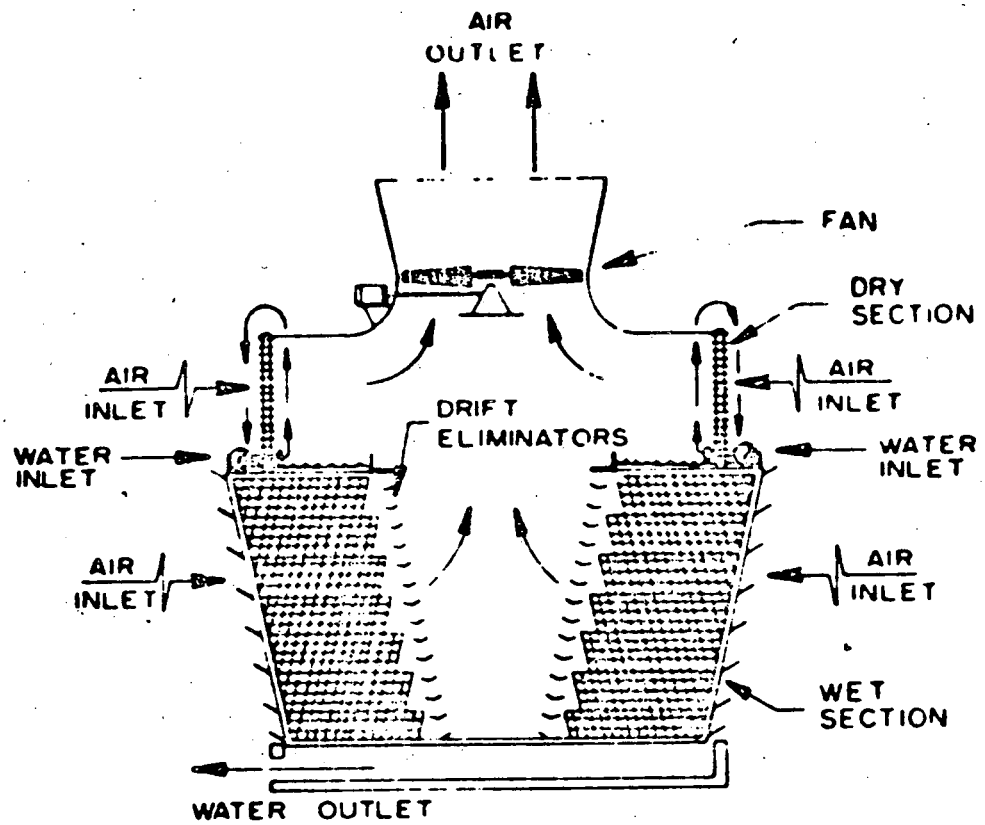

Fig. S1-3

MECHANICAL - DRAFT WET-DRY COOLING TOWER

Top of Dry Section, Elevation	88 Feet	MSL
Top of Fill, Elevation	75 Feet	MSL
Bottom of Basin, Elevation	32 Feet	MSL
Grade Elevation	40 Feet	MSL

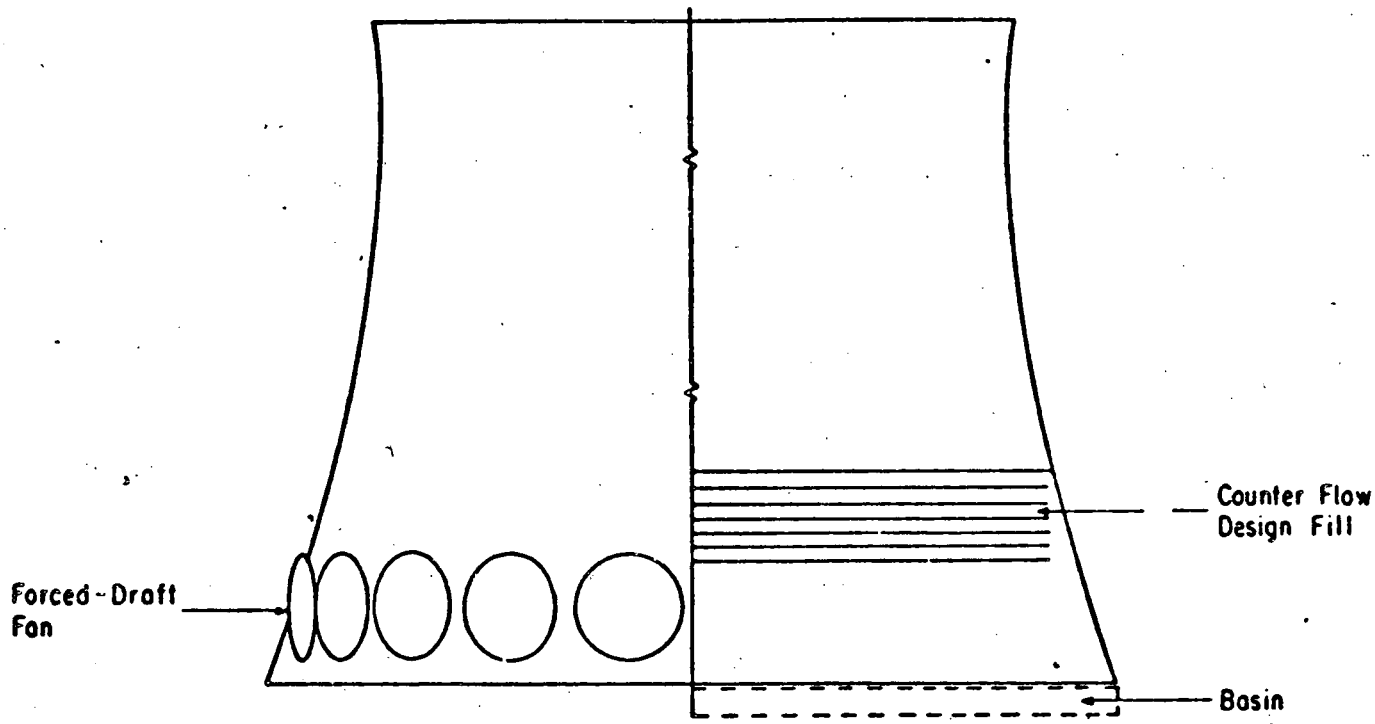

Fig. S1-4

FAN-ASSISTED NATURAL-DRAFT COOLING TOWER

Sprayer Discharge Elevation	103 Feet	MSL
Top of Fill, Elevation	101 Feet	MSL
Bottom of Basin, Elevation	45 Feet	MSL
Grade Elevation	53 Feet	MSL

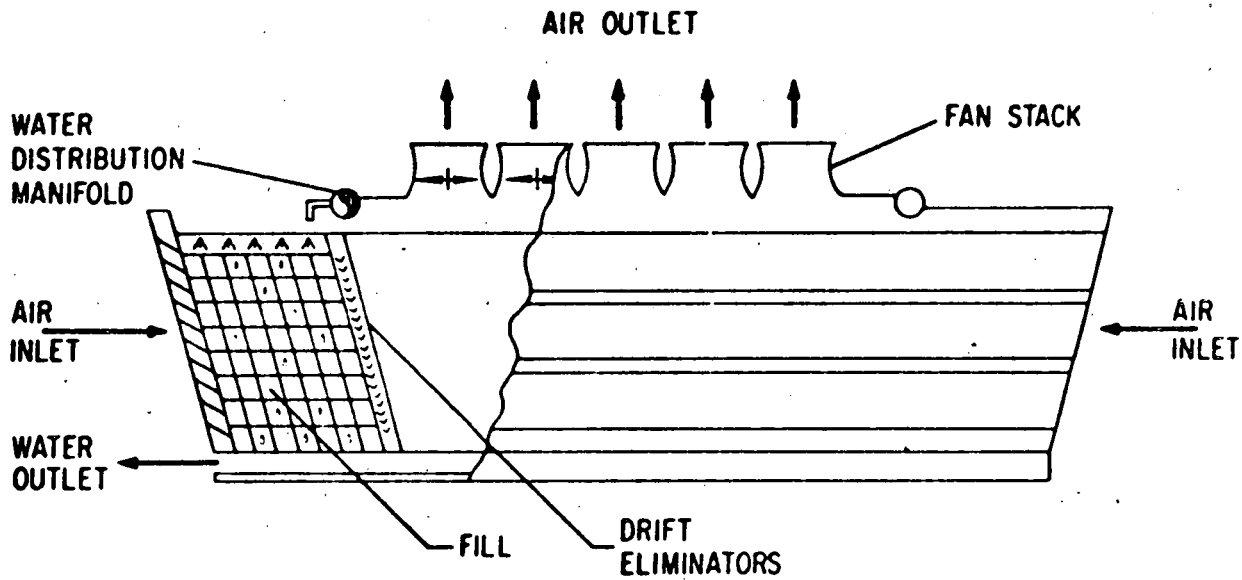

Sprayer Discharge Elevation	103 Feet	MSL
Top of Fill, Elevation	102 Feet	MSL
Bottom of Basin, Elevation	45 Feet	MSL
Grade Elevation	53 Feet	MSL

Fig. S1-5

MULTIPLE - FAN ROUND
MECHANICAL- DRAFT WET COOLING TOWER

UNITED STATES OF AMERICA
NUCLEAR REGULATORY COMMISSION

In the Matter of	)	
	)	
CONSOLIDATED EDISON COMPANY	)	Docket No. 50-247
OF NEW YORK, INC.	)	
(Indian Point Station,	)	
Unit No. 2)	)	

CERTIFICATE OF SERVICE

I hereby certify that I have this 6th day of August, 1975, served the foregoing Responses to the letter dated July 10, 1975 from Mr. George W. Knighton to Con Edison by mailing copies thereof, first class postage prepaid and properly addressed to the following persons:

Sarah Chasis, Esq.
Natural Resources Defense
Council, Inc.
15 West 44th Street
New York, New York 10036

Hon. George V. Begany
Mayor, Village of Buchanan
Buchanan, New York 10511

Hon. Louis J. Lefkowitz
Attorney General of the
State of New York
Att: James P. Corcoran, Esq.
Two World Trade Center
New York, New York 10047

Carmine J. Clemente, Esq.
New York State Department
of Commerce
99 Washington Avenue
Albany, New York 12210

Joseph Gallo, Esq.
Chief Hearing Counsel
U.S. Nuclear Regulatory
Commission
Washington, D.C. 20555

Secretary
U.S. Nuclear Regulatory
Commission
Washington, D.C. 20555
Att: Chief, Docketing and
Service Section

Edward J. Sack

Edward J. Sack