CONSOLIDATED EDISON COMPANY
OF NEW YORK, INC.

Indian Point Unit No. 2

INTR

Further Responses to Questions Asked
by the Citizens Committee for the
Protection of the Environment

February 12, 1971

Question No. C-1

Question: What is the probability of an explosive rupture of the reactor vessel or of large elements of the primary loop, resulting in flying parts at high velocity and momentum; i.e. can it be shown that such a failure never happened in the history of high pressure vessels, or is extremely unlikely today?

Answer: The conservatism in the design and in the manufacturing process combined with careful operation, strict quality control and quality assurance during every facet of the design and manufacturing process, and a responsible inservice inspection program eliminates the probability of an explosive rupture of the reactor vessel or large elements of the primary loop.

Applicant is aware of no catastrophic failure of nuclear grade vessels.

Question No. C-2.

Question: What is the probability of a failure in the reactor vessel head bolts, or in the control rod head nozzles or retention bolts that would result in the entire head or a control rod drive being ejected upward at high velocity? Has such a failure ever happened yet?

Answer: The answer given in response to Sec C Question 1 applies also to the reactor vessel head bolts and to the control rod head nozzles.

Question No. C-3

Question: Is there a conceivable combination of events or combination of failures in the control rod drive system that could permit the reactor pressure to drive a rod upwards at high velocity sufficient to rupture and keep on going?

Answer: No.

Question No. C-4

Question: What is the probability that any of the flying parts in any of the three failures above would rupture either (a) the wall of the containment vessel, or (b) one of the vulnerable points in the containment, such as a penetration bellows?

Answer: As stated in the answers to the set C questions 1, 2 and 3, steps are taken to prevent catastrophic failures of the reactor Coolant System. Hence the probability of the postulated ruptures has been eliminated.

Question No. C-5

Question: During the expected operating life of the reactor vessel, will the embrittlement of its steel due to radiation increase the probability of the failures above? If so, by how much? What is this operating life.? What is the latest embrittlement (NDT) data to support this conclusion?

Answer: No, because of operating limitations (see answer to Set A question 17) together with surveillance of reactor vessel specimens (See Technical Specification 4.2).

The latest embrittlement data are the results of the Heavy Section Steel Technology program being conducted by ORNL for the AEC.

Question No. C-6

Question: Is it possible for the safety injection system to subject the reactor vessel to thermal shock, so that it would be unsafe to operate again? What is the maximum local cooling rate the steel might experience in this event?

Answer: The possibility for the safety injection system to subject the reactor vessel to thermal shock so that it would be unsafe to operate is extremely remote. The maximum local cooling rate the steel might experience in this remote event was conservatively calculated to be approximately 7°/sec.

Question No. D-1

Question: What flight paths from civilian and military air-fields in the fifty-mile radius around Indian Point Unit No. 2 site cross over near the reactor?

Answer: Applicant has not determined what flight paths from civilian and military air-fields in the fifty-mile radius around Indian Point Unit No. 2 site cross over near the reactor. None of these air-fields, however, are close enough to place Indian Point in the "high density accident area" associated with the glidepaths for take-offs and landings in the immediate vicinity of the air-fields.

Question D-6

Question: If a serious contamination of the site were to occur from the malfunction of one reactor, would the other reactors be accessible?

Answer: Yes

Question D-7

Question: Would they be accessible so that safe shutdown could be accomplished?

Answer: Yes.

Question D-8

Question: Could the other reactors be manned to produce power?

Answer: Yes.

Question No. D-9

Question: Describe the tests that the monitoring equipment for No. 2 has been put through.

Answer: Radiation monitoring equipment is calibrated and functionally tested as part of the pre-operational test program. (See FSAR, Section 13.1 and Table 13.1-1, Item No. 19).

Question No. D-10

Question: What provision will be made for testing while in operation?

Answer: All radiation monitoring equipment has the capability for in-service testing and calibration. (see FSAR, Pages 11.2-11 and 11.2-12).

After initial operation, periodic testing and calibration will be performed on a routine basis (see proposed Technical Specifications, Table 4.1-1).

Question No. D-12

Question: List all areas where assumptions are not in accordance with TID-14844.

Answer: The attached table compares applicable assumptions used by Applicant in his analyses to TID-14844 Fundamental Assumptions.

TID-14844 Fundamental Assumptions

1. Releases to reactor building of 100% of the noble gases, 50% of the halogens, and 1% of the solids in the fission product inventory.

2. 50% of the iodines plate-out on internal surface of the reactor building.

3. 0.1% per day reactor building leakage to environment.

4. Meteorological dispersion constant according to Sutton's equation

   ($\bar{u}$ = 1m/sec, $C_y = 0.40m^{n/2}$,

   $C_z = 0.07m^{n/2}$, n = 0.5,

   $$\sigma_y = \frac{0.40}{2} d^{0.75}, \quad \sigma_z = \frac{0.07}{2} d^{0.75}$$

Applicant's Basic Assumption

1. Gap radioactivity released to containment (equivalent to 3% of I-131, 2.5% Xe-133 in core inventory.)

2. No plate-out.

3. 0.1% for the first 24 hours; 0.045% thereafter.

4. Meteorological dispersion varying according to Sutton's equation modified for building wake for the first 24 hours.

Category :	C_y	C_z	n	$\bar{u}$	x_o
Inversion-I	$0.4\ m^{n/2}$	$0.07\ m^{n/2}$	0.5	1 m/sec	430 m

The first period comprises the first two hours after the accident. The direction of the 1 meter per second wind is assumed to be constant throughout the period.

The second period is the next 22 hours after the accident during which the same inversion condition is assumed to exist, but the average wind speed from the same direction is assumed to be 2 meters per second.

TID-14844 Fundamental Assumptions	Applicant's Basic Assumption
	The third period is from 24 hours after the accident. During this period, the meteorological conditions are assumed to be randomly distributed among the categories listed below:

Category i	Fraction Fi	$1/\bar{u}$	C_z	C_y	n
Lapse - L_1	0.137	0.575	0.48	0.6	0.2
Lapse - L_2	0.061	0.191	0.43	0.53	0.3
Neutral - N	0.378	0.358	0.39	0.47	0.4
Inversion-I	0.424	0.493	0.97	0.40	0.5

5. No fallout	5. No fallout
6. No credit for shielding by	6. Credit taken for shielding by containment.
7. Decay of fission products while in containment but not during transit.	7. Same.
8. Whole body dose assumed from direct rather than cloud immersion exposure	8. Whole body dose assumed from cloud immersion
9. At low population zone, breathing rate = 0.8 m^3/hr.	9. At low population zone, breathing rate 0-2 hours = 1.25 m^3/hr 2-720 hours = 0.8 m^3/hr
10. No credit for spray and filters.	10. Credit taken for spray and filters.

Question No. D-13

Question: To what extent does Indian Point Unit No. 2 reactor conform to the siting guidlines in TID-14844?

Answer: 10CFR100 is the document which prescribes reactor siting guidelines. IP-2 conforms to these guidelines.

Question No. D-17

Question: What specific safeguards have been requested by the Regulatory Staff since a Provisional Construction License for Indian Point Unit No. 2 was given in December 1966 that were not in the Application?

Answer: There have been no specific safeguards requested by the Regulatory Staff since a Provisional Construction License for Indian Point Unit No. 2 was issued.

Question No. D-18

Question: Which of these safeguards have been functionally tested? Furnish reports on the results of such tests.

Answer: See answer to Question D-17.

Question No. D-23

Question : What reliability tests have been conducted on the safeguards and the sequence of safeguards following a loss-of-coolant?

Answer: Westinghouse plants have accumulated many years of operating experience. This operating experience together with testing of engineered safety features (see Response to Set D question 52) assures that these systems and their sequencing are reliable.

Question No. D-25

Question: Have provisions been made to provide more isolation to the degree that engineered safeguards are less than 100% engineered and 100% reliable.

Answer: Engineered safeguards have been provided which are adequate to meet the requirements of the site.

Redundancy is provided to protect against particular components and functions being less than 100% reliable.

Question No. D-28

Question: How quickly must the flooding of the core be started following a major break in the praimary colling system?

Answer: Following a major break in the primary cooling system there is, by definition, a depressurization. Flooding of the core starts automatically and immediately on depressurization.

Question No. D-29

Question: At what temperature is the vessel? The flooding water?

Answer: Following a major break in the primary cooling system, the reactor vessel temperature is at 543° F. and the flooding water temperature is above 70° F.

Question No. D-30.

Question: Are the results available from the LOFT experiments in this situation?

Answer: No.

Question No. D-31

Question: Can the results be meaningful in a 14 foot pressure vessel with individual metal characteristics:

Answer: See Response to Set D question 30.

Question D-32.

Question: How many "burned-out" employees has Indian Point No. 1 accounted for?

Answer: None. (See Response to Question 33, Set D).

Question No. D-33

Question: What constitutes a "burned-out" employee?

Answer: The term "burned-out" is a colloquialism which indicates that an employee has reached the exposure limits specified in 10CFR20.

Question No. D-34.

Question: Furnish a chart showing the length of time it took the affected employees to become "burned-out."

Answer Not applicable. See Question 32, Set D.

Question No. D-35.

Question: Have other employees been advised not to have additional exposures in the form of medical or dental X-rays?

Answer: No.

Question No. D-37.

Question: Furnish a chart showing all standards used in design of IP#2 and effective dates of standards.

Answer: The large number of standards used in the design of IP-2 and the generality of this request makes preparation of such a chart impractical.

The principal standards used for IP #2 equipment are listed in the pertinent sections of the FSAR.

Question No. D-38

Question: What provision is made for updating components and functions?

Answer: The Nuclear Facilities Safety Committee of Con Edison, reviews and evaluates the operation and safety of all nuclear plants in the Con Edison system. From this review, the Committee determines if any modifications are required.

In addition, from time to time, the AEC may call to Con Edison's attention the results of experience elsewhere which may require modification.

Question No. D-40

Question: Describe the operation of pouring the pressure vessel.

Answer: The reactor vessel is not poured.

The reactor vessel is a weldment consisting of a vessel flange forging, a refueling seal ledge, an upper shell course containing the inlet and outlet nozzles, an intermediate shell course, a lower shell course containing the core support guides, a lower head ring and a bottom hemispherical head having the instrumentation nozzles.

The reactor vessel flange is a machined forging welded to the upper shell course. A refueling seal ledge is welded to the outside diameter. The glange is designed with a support for the core, a gasket face for positive sealing of the vessel, monitoring taps to detect water leakage through the gasket closure, irradiation tube slots, keyway slots for aligning the closure head assembly and vessel, and stud holes for effecting closure of the closure head assembly and vessel.

The upper shell course is a machined forging welded to the reactor vessel flange and to the intermediate shell course. The upper shell course contains the reactor coolant nozzles with the vessel support weld pads. The reactor coolant nozzle forgings are welded to the upper shell course forging to provide entry and discharge of the reactor coolant. The nozzle and connections are clad with weld deposited autenitic stainless steel and are machined for field welding to the main coolant piping.

Question No. D-40 (Continued)

The intermediate and lower shell courses are formed cylindrical plate which are first formed separately by longitudinal welding and then the two cylindrical shell courses are welded together by a circumferential weld to form one long shell sub-assembly. Core support guides are welded at the bottom of the lower shell course to an area of the shell which has been clad with Inconel. This sub-assembly is then welded to the upper shell course and the lower head ring forging.

The lower head ring forging is welded to and joins the shell sub= assembly and the bottom hemispherical head. The bottom hemispherical head is welded to the lower head ring of the vessel. This hemispherical head is formed from a single plate and is penetrated by instrumentation nozzles.

The closure head assembly is a weldment consisting of a hemi-spherical dished segment plate and flange forging. The dished segment of the closure head contains penetrations, to accomodate the control rod mechanisms housings.

The closure head assembly has lifting lugs permanently attached for handling the head during refueling operations. Vent shroud support lugs are also permanently attached to the closure head for supporting the vent shroud support flange. The shroud support flange has holes to made with the vent shroud bolt hole arrangement.

Each of the control rod mechanism housings penetrating the closure head is a weldment consisting of a threaded adapter and body. The mechanism housings are inserted into the closure head penetrations with an interference fit. The housings are then welded to the closure head on the inside.

Question No. D-40 (Continued)

The closure head is secured to the vessel flange by closure stud assemblies. Each assembly consists of a threated hex head stud, a castellated nut, a set of spherical washers retained by clips attached to the nut by screws and top and bottom inserts. Each stud has a center hole through the length of the stud to receive a stud elongation measuring rod. Each stud also has a threaded length sufficient to accomodate a hydraulic stud tensioner.

Question No. D-42.

Question: Furnish all ultrasonic inspection records and discussions of calibration and methods used in ultra-sonic testing

Answer: The ultrasonic inspection information requested is in the safe-keeping of the vessel manufacturer, Combustion Engineering at Chattanooga, Tennessee.

Question No. D-50

Furnish a stress analysis (thermal) for the DBA conditions where all the water has been expelled and the vessel is at 600°F and 80°F water is introduced in the flooding mode.

Answer: THERMAL STRESSES

The stresses in the reactor vessel due to a radial temperature gradient are somewhere between the plane stress lower bound (thin disc) and the plane strain upper bound (long cylinder). In this calculation plane strain is assumed for conservatism.

The material properties will be assumed uniform, at any given time, having the values specified for the mean temperature of the wall at that time. These values are taken form Reference (1).

Reference (2) gives the following expressions for thermal stresses in a long cylinder due to a radial temperature gradient:

$$\sigma_r = \text{radial stress} = \frac{\alpha E}{(1-\nu)} \frac{1}{r^2} \left[\frac{r^2 - a^2}{b^2 - a^2} \int_a^b Trdr - \int_a^r Trdr \right]$$

$$\sigma_r = \text{circumferential stress} = \frac{\alpha E}{(1-\nu)} \frac{1}{r^2} \left[\frac{r^2 + a^2}{b^2 - a^2} \int_a^b Trdr + \int_a^b Trdr - Rt^2 \right] \quad (1)$$

$$\sigma_z = \text{axial stress} = \frac{\alpha E}{(1-\nu)} \left[\frac{2}{b^2 - a^2} \int_a^b Trdr - T \right]$$

The temperatures were calculated using equation 2, and the stress profiles were then calculated by equation 1. The results are shown in figure 1.

2.0 TEMPERATURE

Assumptions:

1) Thermal properties remain constant with temperature and are uniform throughout the vessel wall,

2) Vessel wall is perfectly insulated at the back face (r = b),

3) At time zero, the vessel wall is at uniform operating temperature. At this time the inside surface is exposed to the safety injection water inducing a convective environment at a constant temperature of 70°F.

The heat transfer probelm reduces to the following one dimensional, transient conduction problem. (reference 3)

$$\frac{\partial T}{\partial t} = \left(\frac{k}{\rho c_p}\right)\left(\frac{\partial^2 T}{\partial r^2} + \frac{1}{R}\frac{\partial T}{\partial r}\right) \quad ; \quad T = T(r,t) \qquad (2)$$

Initial Condition i) $T(r,o) = T_o$

Boundary Conditions ii) $K \frac{\partial T(a,t)}{\partial r} = h\,[T(a,t) - T_w]$

iii) $\frac{\partial T(b,t)}{\partial r} = 0$

Where the temperature (T) is a function of radial position (r) and time (t) only, and the thermal diffusivity ($k/\rho c_p$) for SA-302 B steel is 0.45 ft^2/hr. T_o is the initial operating temperature (570°F), T_w is the safety injection water temperature (70°F) and k is the thermal conductivity for SA-302 B steel (26.4 Btu/hr-ft-°F).

The following variation of heat transfer coefficient (h) is used to take into account the three separate convection regimes.

The effect of the stainless steel cladding is taken into account by means of an equivalent overall heat transfer coeffieient (h_{tot}).

$$h_{tot} = \frac{1}{\delta/k_1 + 1/h} \qquad (3)$$

where δ is the cladding thickness (.21875 in), k_1 is the thermal conductivity of the cladding (10.0 Btu/hr-ft-°F), and h is the heat transfer coefficients shown in Figure 2-2. Substitution of these numerical values into equation (3) yields the following overall heat transfer coefficients for the three convection regimes:

Regime I ($h = 1000$ Btu/hr-ft^2-°F)

$h_{tot} = 354$ Btu/hr-ft^2-°F

Regime II ($h = 10{,}000$ Btu/hr-ft^2-°F)

$h_{tot} = 84.6$ Btu/hr-ft^2-°F

An implicit finite difference scheme (Ref. 4) has been used to integrate equation (2) for temperature as a function of radial position and time [T(r,t)].

The whole process has been computerized to increase the speed of calculation. Computerization also allows much smaller increments to be used in both the finite difference scheme for getting temperatures and the trapezoid rule integration for getting stresses, thus improving the accuracy as well.

References:

1. Tentative Structural Design Basis for Reactor Pressure Vessels and Directly Associated Components PB-151987.

2. Timoshenko and Goodier, Theory of Elasticity, McGraw-Hill Book Co., 1951

3. U.S. Arpaci, Conduction Heat Transfer, Addison-Wesley Publishing Co., 1966

4. S.H. Crandall, Engineering Analysis, McGraw Hill Book Co., 1958

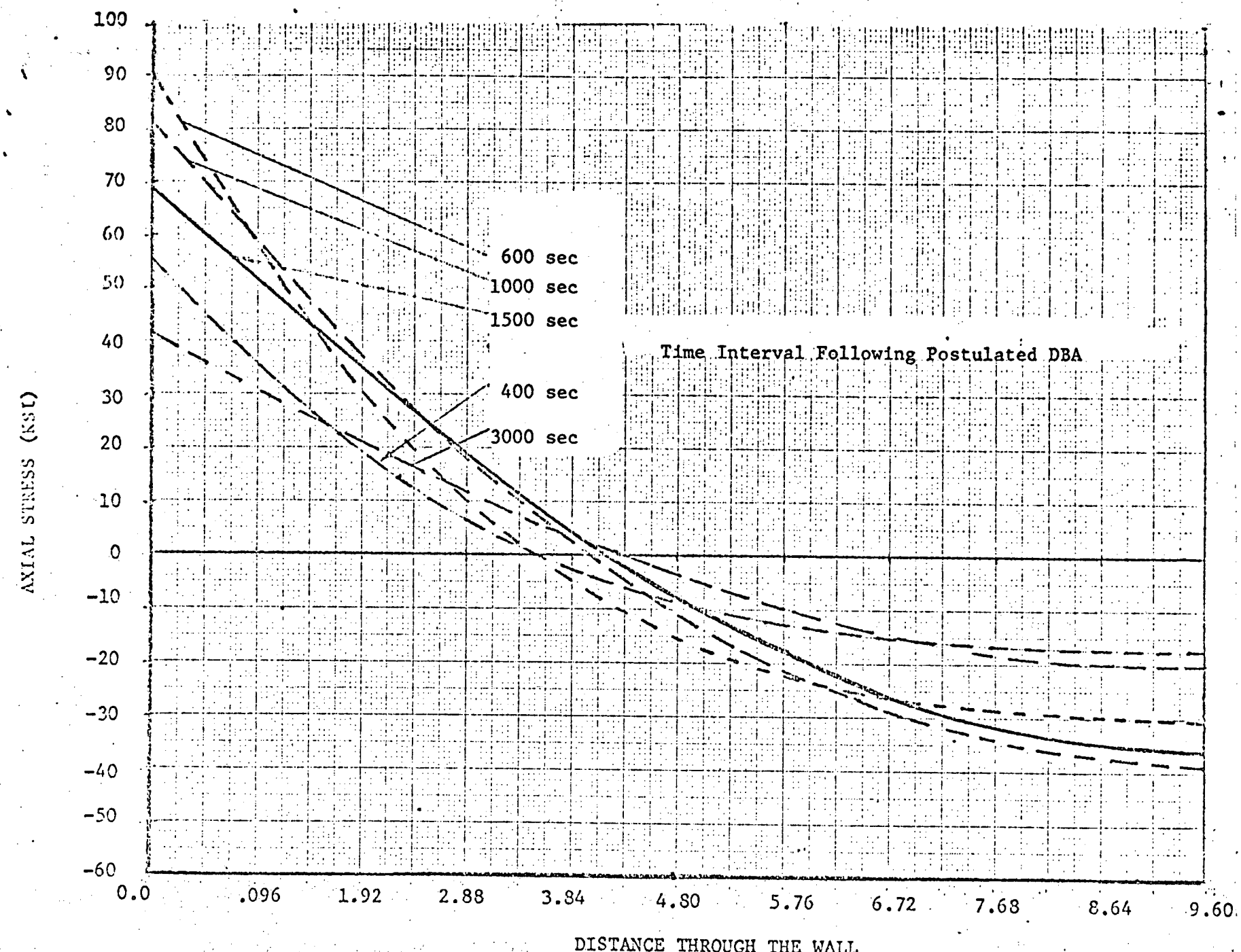
100
90
80
70
60
50
40
30
20
10
0
-10
-20
-30
-40
-50
-60
AXIAL STRESS (KSI)
0.0
.096
1.92
2.88
3.84
4.80
5.76
6.72
7.68
8.64
9.60
DISTANCE THROUGH THE WALL
600 sec
1000 sec
1500 sec
400 sec
3000 sec
Time Interval Following Postulated DBA

Figure 1

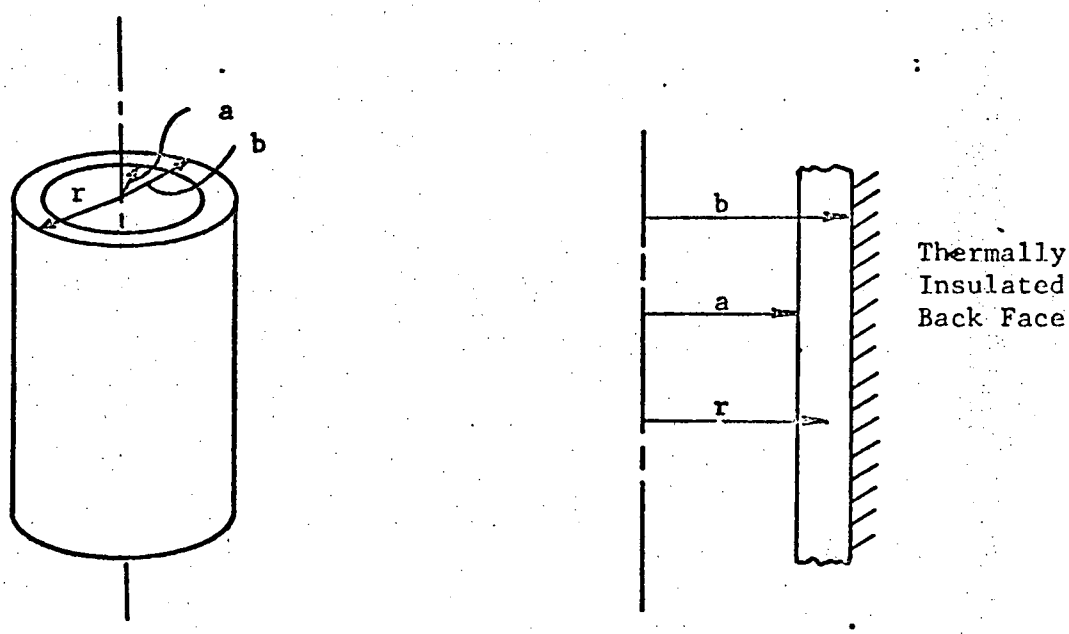

Figure 2-1

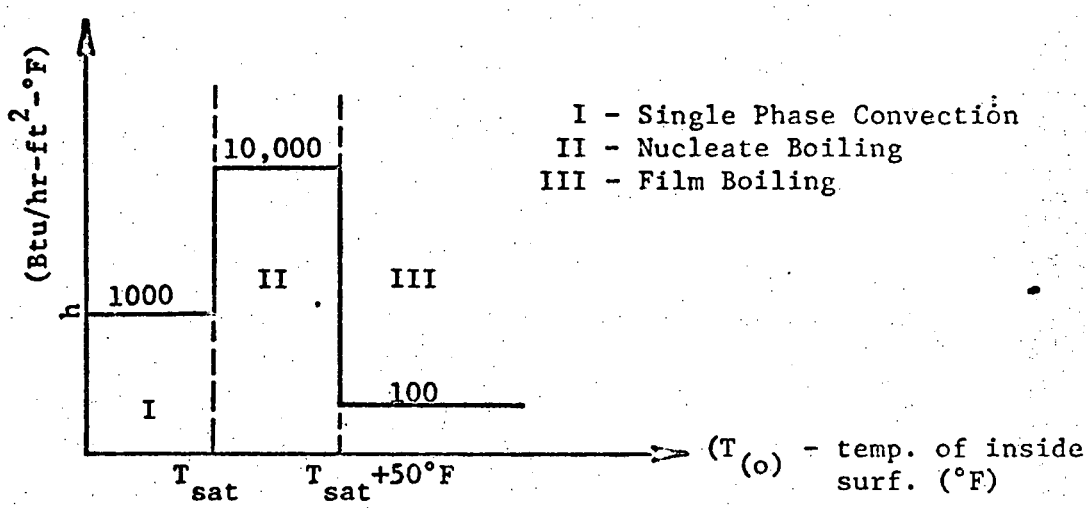
h (Btu/hr-ft^2-°F)
10,000
1000
100
I
II
III
I - Single Phase Convection
II - Nucleate Boiling
III - Film Boiling
T_{sat}
T_{sat}+50°F
($T_{(o)}$ - temp. of inside surf. (°F)

Figure 2-2

Question No. D-51

Question: Furnish a computer model of assumptions usd and results, if a hand analysis is not available.

Answer: See response to Set D, Question 50.

Question No. D-56

Question: Furnish a copy of the Applicant's Recurrance Control Plan.

Answer: Applicant does not have such a document.

Question No. D-57

Question: If an accident happens at another reactor, how does Con Edison alert to it, so measures to guard against it recurring can be taken?

Answer: Information on experience at other reactors is available to Con Edison from a number of sources, including the AEC, other utilities its contractors and others in the nuclear industry, and nuclear industry publications.

Question No. D-59

Question: Explain the reasons for the transfer of projects from United Engineers.

Answer: The formation of WEDCO and the transfer of certain functions from UE&C to WEDCO described in Volume 6, Tab III of the FSAR were done primarily to centralize and coordinate Project Management within Westinghouse Electric Company's organization which is and has been the prime contractor.

Question No. D-61

Question: Furnish a copy of the Applicants Configuration Traceability Report covering changes of equipment.

Answer: Applicant does not have such a document. Configuration traceability is recorded by means of purchase orders, purchase order change notices and engineering change notices.

Question No. D-62

Question: What control is there to know that if inspection turns up a bad pipe, what other pieces were given the same heat treatment?

Answer: Material test reports associated with the major piping contained in the reactor coolant system pressure boundary and associated safeguards identify the chemical and physical certifications associated with a heat or heats of material. By reviewing the applicable heats of material for consistency with heats in question, verification of adequacy of pipe can be obtained.

Question No. D-63

Question: Prepare a matrix showing where the plant needs updated standards since in April 1970, federal regulations proposed standards and effective dates when construction permits had been given.

Answer: This plant received is construction permit prior to April 1970. Updating is not needed. (See proposed paragraph 50.55 a, Title 10, Part 50 CFR of December 19, 1969).

Question No. D-64

Question: Where is backfitting needed and when will this be done?

Answer: No backfitting is needed for this plant.

Question No. D-65

Question: Describe fatigue characteristics of metal tubing, no of cycles against what standards prescribe for IP #2 installations.

Answer: The only tubing in the Indian Point Unit No. 2 application for which standards prescribe fatigue analysis is that used in the steam generators. The Cumulative Usage Factor for this tubing does not exceed 0.063 of the safe design limit, 1.0.

Question No. D-67

Question: What redundancy exists in river inatkes?

Answer: River water flows into six separate screenwells. The water from each individual screenwell flows to a motor-driven, vertical mixed flow condenser circulating pump. Each of the six condenser circulating pumps is located in an individual pump well.

The service water pumps are in a common chamber with one intake normally operating. A second full flow service water intake is provided for redundancy. Openings are also provided between the main circulating water pump chambers on either side and the service water pump chamber. These two openings can be closed by gates, but are normally open.

The service water pumps can therefore obtain water through four separate intakes, each capable of supplying all the water required. Even if the main circulating pump intake were 90% blocked, that intake alone would be capable of supplying all water required for the service water pumps at design condition.

Question No. D-71

Question: Furnish a schedule of mandatory Hold points during inspections.

Applicant cannot comply with this request because of the many components and operations involved.

Question No. D-73

Question: Furnish a schedule of hours spent by Con Edison inspectors; how many inspectors?

Answer: Con Edison has had representatives assigned to Indian Point Unit No. 2 from the start of construction to the present. There are presently at least ten Con Edison personnel involved with various inspection phases of Indian Point Unit No. 2.

Because the schedule of inspection hours, the number of inspectors and the inspectors themselves varied as the construction program progressed, it is not possible to provide a schedule of hours spent.

Question No. D-74

Question: What activation of the accident and evacuation plan would be called for in the event of a design basis accident?

Answer: In the event of a design basis accident, a Site Emergency will be declared and the Site Contingency Plan as described in answer to FSAR Question 12.5 will be implemented. The State of New York and other officials would be notified as provided in the Site Contingency Plan. In accordance with the State's emergency plan of the State Health Department of New York, officials would determine based upon information available at the time, what off-site protective actions, if any, might be required.

Question No. D-75

Question: Who would be responsible, authorized to notify hospitals, etc?

Answer: As indicated in the answer to Set A, Question 48, it is not considered that there would be a need for hospital attention for off-site persons even in the event of a design basis accident. The Radiation Contingency Plan, as described in the answer to FSAR Question 12.5 gives details on notifications that would be made by Con Edison in the event of a design basis accident. Notification of additional parties would be made, if necessary, under the direction of officials of the State of New York in accordance with its emergency plan.

Question No. D-76

Question: What is the extent of the preparedness of area hospitals to treat victims of an accident involving radiation release?

Answer: If we presume the question refers to radiation civilian casualties, it is inapplicable in view of the lack of such need arising from an accident at Indian Point affecting the public. Even in the extremely unlikely event of an Indian Point accident resulting in a radiation dose to members of the public, neither those receiving the dose nor those attending those persons would be civilian casualties in the sense that they would require hospital attention.

If, however, we are discussing highly radioactive patients such as might be involved in some highly improbable circumstances involving an Indian Point plant employee, N.Y.U. Medical Center can handle four to six patients and the Indian Point Medical facilities can handle ten litter patients and four who could be administered limited surgery. It is possible that other area hospitals also have facilities for handling such patients.

Question No. D-77

Question: How many hospitals of the 20-25 in the 25-mile radius around the site would admit victims suffering from radiation?

Answer: See the answer to Set D, Question 76.

Question No. D-78

Question: Have ambulance corps and volunteer ambulance teams in the Bergen, Rockland and Westchester areas been given training in handling radiation victims?

Answer: Incidents at Indian Point would not produce off-site consequences that would require utilization of ambulances. However, a capability does exist for handling injured plant personnel who may also be contaminated by radioactivity. The Verplanck Fire Department Volunteer Ambulance has been instructed in the operation of the Portable Radioisotope Decontamination Kit which has been developed by the Medical Department of Consolidated Edison for the treatment of radioactive skin contamination at any local site prior to transfer to a medical treatment facility. The Volunteer Ambulance group has also been advised that the Portable Radioisotope Decontamination Kit and Health Physics Personnel at Indian Point Station would be available to them for a radiation incident in the community at the request of appropriate local, State and Federal officials and agencies.

It is possible that other ambulance groups in the Bergen, Rockland and Westchester areas have received similar specialized training.

Question No. D-79

Question: How many local doctors have been given the one-week course at Oak Ridge in the care of radiation victims?

Answer: Two physicians employed by Con Edison have taken a training course in the care of radiation victims given at the Brookhaven National Laboratory. The Indian Point site has available a staff trained in the treatment of persons suffering from radioactive contamination. This staff includes an on-site physician, health physicists, a first-aid instructor and two first aid men per shift. In addition, Con Edison has other physicians and technical personnel available for use in the event of any contamination incident. We are not aware of any local doctors who have taken the Oak Ridge course or other training in the care of radiation victims.

Question No. D-82

Question: What would be the consequences of the suppression pool leaking into the water table at Indian Point #2?

Answer: There is no suppression pool in the Indian Point Unit No. 2 pressurized water reactor facility.

Question No. D-85

Question: What tracer studies have been done in the area on food chains leading to man?

Answer: Applicant is not aware of any tracer studies that have been done in this area on food chains leading to man.

Question No. D-88.

Question: Furnish a cause and effect study of a 100% core meltdown.

Answer: Applicant has not prepared a cause and effect study of a 100% core meltdown. The design of the plant includes provisions to prevent major meltdown.

Question No. D-91

Question: Furnish an analysis of fault trees by kinetic tree theory.

Answer: An analysis of fault trees by the "Kinetic Tree Theory" was not performed for this plant.

Question No. D-93.

Question: Furnish a missile map of power projectiles from turbine generators, pumps and other rotating machinery.

Answer: See FSAR Section 14, Appendix 14A.

Question No. D-96

Question: Furnish a study of Indian Point No. 1 downtime, and in-line replacement of components.

Answer; The Indian Point Station Semi-Annual Operation Reports, pursuant to Provisional Operating License DPR-5 for Unit No. 1, tabulates all significant operating statistics including a plot of power generation history. This report also includes a section on principal maintenance and design changes.

Question No. D-97

Question: Furnish a study of possible effects of salinity getting into primary coolant.

Answer: Salinity in the primary coolant (chlorides and fluorides) is limited by the proposed Technical Specifications (see Section 3.1E) to prevent cracking of stainless steel. These limits are conservative relative to the relationship given in USAEC study TID-7006, Corrosion and Wear Handbook for Water-Cooled Reactors.

Question No. D-98

Question: Furnish a study of what part of total radioactive releases will come from condensate tank.

Answer: During normal operation, all liquid radioactive releases will come from the waste condensate tanks.

Question No. D-99

Question: How many pounds of high-level waste will be on site assuming all units building and proposed are operable, and the spent fuel is being cooled prior to shipment is being held at the plant?

Answer: The majority of the high-level wastes that can be stored on site from Units 1, 2 and 3 will be contained in spent fuel. Assuming one-third of a core from each unit is stored at the same time, this will be 137,000 lbs. of high-level waste.

Question No. D-100

Question: What is the total curies that will be present at maximum storage levels?

Answer: For Units 1, 2 and 3, the total curies present in spent fuel at maximum storage levels will be:

8.8×10^9 Ci (1-1/3 cores each plant, maximum; 2.2×10^9 Ci for 1/3 core each plant, expected)

Question No. D-113

Question: Furnish progress reports of most recent date on r & d pertaining to core stability failed fuel monitor, and power distribution monitoring.

Answer: See FSAR Appendix 3B.

Question No. D-115

Question: Describe the program for periodic testing of the spray headers of the sodium hydroxide iodine removal system.

Answer: The program for periodic testing of the containment spray headers is described in Section 4.5 of the Technical Specifications. These tests will consist of introducing air to the spray headers and nozzles and observing the movement of an indicator at each nozzle.

Question No. D-116

Question: Describe the improved stationary and mobile monitoring equipment recommended by the AS & LB on Indian Point No. 3 construction license.

Answer: The location and characteristics of the monitoring equipment are given in Table 2.9-1 of the IP-2 FSAR.

Six Gelman air samplers are in service at these locations. The filter holders are directly exposed to the air without connecting tubing. A running time meter in each of these units allows correct evaluation of the sampling period in the event of interruption of the electrical supply.

The mobile monitor has been modified to eliminate the plastic tubing at the inlet to the air particulate collecting filter. A second mobile unit has been placed in stand-by service as an alternate unit. This provides availability of monitoring equipment when the primary mobile monitor is out of service for maintenance.

Question No. D-118

Question: Describe research underway to resolve ability of iodine to plateout in sufficient volume in competition with spray removal system to maintain 300 rem of 10CFR100.

Answer: Applicant is not aware of any research underway to resolve the ability of iodine to plate-out in sufficient volume in competition with a spray removal system to maintain 300 rem of 10CFR100.

Question No. E-8

Question: Was the request for license for Indian Point Unit No. 2 filed under Section 104(b) of the Atomic Energy Act of 1954, as written at the time the application was submitted? If so, please describe the research and development activities which are to be conducted with respect to Indian Point Unit No. 2.

Answer: Yes. The construction and operation of Unit No. 2 was itself considered a research and development activity leading to a demonstration of the practial value of its reactor type for industrial or commercial purposes. In addition, a number of areas were identified at the construction permit stage of Unit No. 2 as requiring research and development during construction. These programs and their results for Unit No. 2 are identified and described in Section VII of the Summary of Application for Unit No. 2, dated November 12, 1970.

Question No. E-9

Question: On how many occasions has Indian Point Unit No. 1 released radioactive particles in excess of the originally predicted operating levels? Specify those times, the quantity and composition of the excess releases and the cause of the excess if it is known.

Answer: A tabulation of all routine releases, discharges and shipments of radioactive material from Indian Point Unit No. 1 is made in the Indian Point Station Semi-Annual Operations Reports. These reports show that in all cases, discharges from Indian Point Unit No. 1 have been well below the limits specified in 10CFR20.

Question No. E-10

Question: Will every fuel rod include the same amount of equally enriched fuel? If not, how many rods will differ? State the normal quantity and enrichment level for the rods and the quantity and enrichment levels for the rods which will not conform.

Answer: The fuel is arranged in 193 assemblies consisting of 39,372 (204 each) fuel rods of identical enrichment in any given assembly. The enrichment is varies between assemblies in the first core in the following manner; 65 assemblies of 2.2%, 64 assemblies of 2.7% and 64 assemblies of 3.2%.

Question No. E-15

Question: What has been the reliability of other nuclear power reactors near the size of Indian Point Unit No. 2? Indian Point Unit No.1? Please give the details if available on the maximum electric output of these other plants and their actual electric output as well as number of days shutdown or operating below full power.

Answer: The reliability of other nuclear power reactors can be obtained from reports filed with the AEC by the utilities involved. These reports are entitled "Operations Report". They are numerous and no summary is available to Applicant.

Question No. E-16

Question: Assume that any one of the following reactor accidents happens at Indian Point:

(A) Case 1 - All the fission products are vaporized and dispersed within the containment shell, with no release to the atmosphere.

(B) Case 2 - All volatile fission products are discharged to the atmosphere at the time of the accident because of a breach in the containment or failure to close all openings.

(C) Case 3 - 50% of all fission products are released into the atmosphere and subsequently dispersed.

(d) Case 4 - Assume both the primary and secondary containment are breached except that the reactor is the size of Indian Point #2, 87 mwe, has the fission product inventory of Indian Point #2, is located on the Hudson

River, and the population distribution is that of the river as of 1975, and assume that the average loss per person is based on the latest dollar values.

On the basis of each of the above assumptions, what would be the estimated consequences of an accident at Indian Point #2?

(1) What is the maximum number of persons who would be killed?

(2) Maximum number of persons injured?

(3) Maximum amount of property damage?

(4) Describe symptoms and pathology.

Give basis for above conclusion, supplying all data, facts, figures and computations.

In answering the question, assume the worst possible conditions and assumptions, as to each of the following factors listed below:

(1) What is the potential radiation dose to the public the exclusion area, the low population zone, and the public?

(2) Which radionuclides are involved, and how much of each will be released and for how long a period?

(3) In how many different ways can such radiation be discharged into the environment from the plant?

(4) Where, when, how long, and in what manner will the radiation discharges travel, and who will be exposed, and how much will be the exposure? Indiacate how exposure computed, i.e., how curies discharged converted into rems.

(5) To what extent will each radionuclide be accumulated, transported and taken up (biological concentration and multiplication)?

(6) How much of the radiation will be concentrated in the food chain?

(7) What are the pathways of each radionuclide to man?

(8) What are the biological effects of such radiation?

(9) What is the total radiation budget and dillution capacity of the environment and of man?

(10) Provide computations of fission releases, facts, figures and the basis for all calculations.

(11) How long would it take until 10CFR100 limits are exceeded?

Answer: With respect to Case 1, there will be no off-site radiological consequences.

Cases 2, 3 and 4 have not been analyzed since they are not part of the design basis accident for this facility and provision is made to preclude their occurrence.

Question No. E-17

Question: Apply the items set forth in the last paragraph of 16 to the following site, environmental, facility design and accident consideration:

(1) Each of the assumed reactor accidents listed in WASH-740 (see Page 11).

(2) Each of the design basis accidents set forth in FSAR and Staff evaluation.

(3) Crash of 300,000 lb + aircraft into a reactor.

(4) Any other events leading to uncontrolled radiation releases.

(5) Any other events leading to routine or uncontrolled radiation releases.

(6) Assuming the worst meteorological assumptions and conditions including the assumption of a ground release.

(7) Assuming the worst hydrological assumptions and conditions, (a) how much and what types of liquid effluent will be discharged into the Hudson River? (b) how much effluent will return to the site area? (c) how much effluent will be trapped by and built up in soil? (d) how much effluent will flow into the ground water?

(8) Assuming the worst possible geological assumptions and conditions, how much radioactive fallout will be deposited in the soil, and taken up in the food chain?

(9) Under the worst seismic and foundation conditions (more severe than considered by applicant and AEC consultant) (a) what would radiation releases be?

Answer: With respect to Item 1, see the response to Set E, Question 28.

Information on the accidents referred to in Item 2 is presented in Section 14.0 of the FSAR, in the Staff's Safety Evaluation on Indian Point Unit No. 2, and in the answers to questions on Section 14 in the FSAR.

With respect to Item 3, applicant has not considered it necessary to perform such an analysis. See the response to Set D, Question 1.

With respect to Items 4 and 5, those events considered credible leading to controlled or uncontrolled radioactive releases have been presented in the Indian Point Unit No. 2 FSAR and the Staff's Safety Evaluation.

With respect to Item 6, the worst meteorological conditions have been assumed in all dose calculations presented in the Indian Point Unit No. 2 FSAR.

With respect to Item 7, in the case of an accident, all those questions (a) through (d) are answered in Section 14.0 of the Indian Point Unit No. 2 FSAR. In the case of normal operating releases, the Indian Point Unit No. 2 FSAR, Section 11.0 and questions on this section, plus the Indian Point Unit No. 2 Environmental Report provide the information required by this question.

With respect to Item 8, for information on the deposition in soil and resultant uptake in the foodchain of radioactivity, see response to Question 18, Set E. With respect to Item 9, seismic conditions worse than those specified in the Staff's Safety Evaluation and the FSAR are not considered credible for this site. See Section 2.8 of the Indian Point Unit No. 2 FSAR.

Question No. E-18

Question: (a) What are background radiation levels?

Answer: The terrestrial oomponent of background radiation in the vicinity of Indian Point ranges from 35 mrem to 123 mrem/year and the cosmic-ray portion of relatively constant at about 31 mrem/year. Dose rates as high as 1300 millirem/year attributable to natural sources have been measured near granite outcroppings in the vicinity of Bear Mountain Bridge. Normal background on a yearly basis in the vicinity of the plant varies between 70 and 155 mrem. In addition to tht external component of background radiation, an individual would receive from internal exposure an additional 30 mrem/year from consumption of air, food and water.

Question No. E-18

Question: (b) What data has been collected in which specific area, by whom, how; describe data and quality of radionuclides.

Answer: See the following reports:

(1) Pre-Operational Environmental Survey of Radioactivity in the Vicinity of Indian Point Power Plant. USAEC Docket 50-3, Exhibit L-7 to L-10. 1958-1967.

(2) Environmental Factors to be Considered After an Accidental Release of Radioactivity from the Consolidated Edison Thorium Reactor. New York State Department of Health, Division of Environmental Health Services. 1962.

(3) Summary of Monitoring and Site Surveillance at Indian Point, New York State Department Of Health; 1959 and 1962.

(4) Survey of Environmental Radioactivity in the Vicinity of Indian Point Station. USAEC Docket 50-3. Semi-Annual Reports from August 1962-present.

(5) Consolidated Edison Indian Point Reactor, Environmental and Post-Operational Survey, July 1966. New York State Department of Health, Division of Environmental Health Services.

(6) Quarterly Environmental Radiation Bulletins, Radioactivity in Air, Milk, and Water. 1968-1971. New York State Department of Health.

(7) Eisenbud, Merril, et.al. Radioecological Survey of the Hudson River, Progress Report 1. New York University Medical Center. 1965.

(8) Eisenbud, Merril, et.al. Ecological Survey of the Hudson River. Progress Report 2. New York University Medical Center. 1966.

(9) Eisenbud, Merril, G. P. Howells, Ecological Survey of the Hudson River. Progress Report 3. New York University Medical Center. 1968.

(10) Eisenbud, Merril, G. P. Howells. Development of a Biological Monitoring System and a Survey of Trace Metals, Radionuclides, and Pesticide Residues in the Lower Hudson River. Final Report. New York University Medical Center. 1969.

(11) Lauer, Gerald J., G. P. Howells. Evaluation of the Ecology of the Middle Hudson River Estuary. New York University Medical Center. 1970.

(12) Davies, Sherwood, Frank Cosolito, Merril Eisenbud. Radioactive Substances, in: Papers of the Symposium on Hudson River Ecology, Tuxedo, New York. 1966

(13) Howells, G. P. et.al. Hudson River Ecology. Quarterly and Annual Reports to the Consolidated Edison Company. 1969-1971.

(14) Eisenbud, Merril. Review of U.S. Commercial Reactor Operating Experience. U.N. Symposium on the Environmental Effects of Nuclear Power Production. New York, 1970.

(15) Lentsch, J. W., McDonald E. Wrenn, Theodore J. Kneip, and Merril Eisenbud. Man-made Radionuclides in the Hudson River Estuary, in Health Physics Aspects of Nuclear Facility Siting, Health Physics Society Midyear Topical Symposium, Idaho Falls, 1970.

(16) Kneip, T. J., G. P. Howells, M. E. Wrenn. Trace Elements, Radionuclides and Pesticide Residues in the Hudson River. FAO Technical Conference on Marine Pollution and Its Effects on Living Resources and Fishing. Rome. 1970.

(17) Howells, G. P., T. J. Kneip, Merril Eisenbud, Water Quality in Industrial Areas; profile of a river. Environmental Science and Technology 4; 26-35, 1970.

Question No. E-18C

Question: What have been the pathways biological concentrations and effects of radioactive fallout for the past twenty years in this area in the environment including air, surface water, bottom sediment, aquatic biota, soil, food groups and vegetation?

Answer: See answer to Question (b).

Question No. E-18

Question: (d) Give basis for conclusion that it will be possible to predict all effects plant operation will have on the environment to wit:

1. How much radiation will be released.

Answer: See Indian Point Unit No. 2 Environmental Report and Indian Point Unit No. 2 FSAR, Question 11.1.

2. Pathways?

Answer: See answer to Part (c).

3. Biological concentrations.

Answer: See answer to Part (c).

4. Biological effects.

Answer: No increase in radioactivity levels in the vicinity of Indian Point can be traced to atmospheric releases at Indian Point Unit No. 1. The dose to man from such releases is not measurable above the background dose rate which ranges from 70 to 155 mrem/year from external sources. Operation of Indian Point Unit No. 2 would not be expected to cause measurable increases in environmental radioactivity levels as a result of atmospheric releases.

The dose to both man and aquatic biota from nuclides released to the Hudson by Indian Point Unit No. 1 have been considered. From measurements of radioactivity in bottom sediments, one can determine that the highest dose to various organisms from releases at Indian Point Unit No. 1 has been 120 mrem/year to a benthic organisms. Fish receive a much smaller dose, the maximum dose from ingested Cs-137 being about 2 mrem/year. Aquatic vegetation, although concentrating activation products to higher levels than fish, have received a maximum dose of about 0.7 mrem/year from Mn-54. Biological effects of radiation on aquatic organisms do not show up at doses less than about 350,000 mrem/year and would not be expected to be observable in any Hudson River organisms. The maximum annual dose to man from fish, assuming 30 grams of fish ingested daily would be 0.03 mrem, from Cs-137 plus Cs-134.

5. Radiation Budget

Answer: The release limits specified in the proposed Technical Specifications, together with the

Environmental Monitoring Program, insure that no off-site personnel will receive doses from plant operation in excess of those specified in 10CFR20.

6. Dilution Capacity

Answer: See answer to Part (c).

(e) Give basis for conclusions that it will be possible at some point to determine whether the radiation discharged from the plant is harmful.

Answer: Applicant has an Environmental Monitoring Program described in FSAR Answer to Question 11.1. This program is used to insure that radiation exposures resulting from plant operation do not exceed limits set forth in 10CFR Part 20. The Applicant will operate the plant in such a manner that exposures will be well within these standards.

Question No. E-19

Question: What studies, if any, have been made of effects of similar size plants in similar environments.

Answer: In connection with the operation of all U.S. nuclear power plants, the results of Environmental Surveys are reported to the AEC on a periodic basis.

Question No. E-20

Question: Give basis for conclusion that construction and test of the plant need not be completed before operating license is issued.

Answer: (AEC response).

Question No. E-25

Question: What are the most advanced state of the art and technology improvements possible to reduce rad as close to zero as possible?

Answer: The Westinghouse Environmental Assurance System, which at the present time is a design concept, shows promise of reducing the already low levels of radiation releases.

Question No. E-26

Question: Has the maximum credible accident included sabotage by men with explosives entering the plant and plant area from the river? If so, where in the FSAR? If not, why not?

Answer: The maximum credible accident does not include specifically sabotage by men with explosives entering the plant and plant area from the river. To guard against unauthorized entry to the property, security measures are provided. (see answer to Question 58, Set A).

Question No. E-28

Question: Has Con Edison included in its design basis accidents all the types of maximum credible accidents considered in WASH-740?

Answer: No.

Question No. E-29

Question: Has Con Edison updated the consequences estimates in WASH-740?

Answer: No.

Question No. F-1

Question: How frequently will operating personnel take a refresher course in fire fighting?

Answer: A refresher course in fire fighting will be given to plant personnel on a yearly basis.

Question No. F-2

Question: How often will fire drills be conducted in the Controlled Area and in other plant areas?

Answer: Fire drills will be conducted at least once every three months.

Question No. F-3

Question: What will these drills consist of?

Answer: A fire drill will consist of the sounding of an alarm by the Central Control Room Operator followed by an announcement of the fire location. The drill will continue to simulate an actual fire with the exception of actual discharge of the contents of the fire fighting equipment since there will be no fire (See answer to FSAR Question 12.5).

Question No. F-4

Question: In the event of a fire in the Controlled Area, what is the minimum number of personnel available to fight it?

Answer: During the off-watches, a minimum of nine men will be available for the Fire Fighting Brigade. During the 8-4 watch, additional men are available from the station maintenance force. The Verplanck Fire Department will be called if necessary (see answer to FSAR Question 12.5).

Question No. F-5

Question: What special precautions would be taken in fighting a fire in the Controlled Area?

Answer: As stated in the FSAR in response to Question 12.5, when a fire is reported in the Controlled Area, the Health Physics Technician will proceed to the fire with the Fire Fighting Brigade. On the way, he will pick up film badges and dosimeters in the Security Room and such protective clothing and equipment from the Emergency Locker as required. The fire will be fought under the supervision of the General Watch Foreman assisted by the Health Physics Technician, who will control and monitor the radiation and contamination exposure of all personnel.

Question No. F-6

Question: If a fire were to occur, in or near the Controlled Area, would the Verplanck Fire Department be summoned immediately?

Answer: Although the need for outside assistance is considered extremely unlikely, the Verplanck Fire Department shall be called by the Central Control Room Operator if in the opinion of the General Watch Foreman their services are needed. (see answer to FSAR Question 12.5).

Question No. F-7

Question: What training has the Verplanck Fire Department received in fighting a fire where radioactivity may be present?

Answer: No special training is considered to be necessary for the Verplanck Fire Department. Special precautions relating to Health Physics aspects and accessibility can be taken in the remote event that the Department's assistance is required. All fire-fighting activities in the Controlled Areas will be under the direct control and supervision of the General Watch Foreman. (see answer to FSAR Question 12.5).

Question No. F-8

Question: In the event that a tornado was sighted in the area and the Central Control Room operator was notified, what protective action might he take?

Answer: Upon notification of a tornado warning, the gas turbine generator will be started and all non-essential plant operations will be halted including fuel-handling operations. (see proposed Technical Specifications, Section 6.9).

Question No. F-9

Question: In the case of an accidental release of radioactive gaseous effluent, how long would it take, approximately, after a Site Contingency Plan was put into effect, to determine if a General Contingency existed?

Answer: The anticipated time is approximately two hours. Appropriate notification of the existence of a site contingency and initiation of protective actions, if required, would occur prior to declaration of a general contingency. See answer to FSAR Question 12.5.

Question No. F-10

Question: If a General Contingency were declared, would the public be notified immediately? If so, how? What kind of information would they be given?

Answer: Prompt notification would be provided the public in the event of an accident which the State Health Department of New York determines requires protective actions, including direction as to the protective action required. Such notification would be provided, if determined necessary, prior to the declaration of a General Contingency.

Question No. F-11

Question: If a General Contingency existed, how would the degree and geographical extent of radioactivity outside the plant site be determined and how long might it take to make that determination? Who would conduct the tests?

Answer: Initial monitoring consisting of downwind direct radiation and air concentration measurements would be made at the site boundary and beyond by the Indian Point Health Physics Monitoring Team. Additional monitoring assistance would be available from off-site support groups as described in Section 5.10 of Question 12.5 of the FSAR. Designated State and Federal Agencies will be kept informed by the applicant of the results of such measurements and a further delineation of the degree and geographical extent of radioactivity will be jointly undertaken by the applicant and these agencies. Measurements would continue to be made as long as it appeared necessary to do so.

Question No. F-12

Question: How many doctors in the Peekskill-Buchanan area are known to be skilled in the treatment of persons suffering from radioactive contamination?

Answer: See the answer to set D, Question 79.

Question No. F-13

Question: Has the possibility that the public might be subjected to radioactivity greater than that permitted by 10CFR100 due to a major accident at Indian Point Unit No. 2 been considered in emergency planning?

Answer: The emergency plan for Indian Point Unit No. 2 is designed to respond to a spectrum of accidents up to and including the design basis loss-of-coolant accident, which produces doses to off-site personnel not in excess of the guidelines of 10CFR100.

Question No. F-14

Question: If a situation arose where there was reasonable doubt that 10CFR100 was being complied with, whose responsibility would it be to decide whether or not to order a public evacuation?

Answer: In the event a site contingency were declared, the State of New York and other officials would be notified as provided in the Site Contingency Plan. In accordance with the State's emergency plan, officials of the State Health Department of New York would determine, based upon information available at the time, what off-site protective action, if any, might be required.

Question No. F-15

Question: Is it possible that spatial instability in the X-Y plane of the reactor might develop after the reactor had been in operation for some time even though it might be absent initially?

Answer: No. The limiting X-Y stability condition is at the beginning of core life. Thus, confirmation of stability at this time is conclusive and no instability will develop later in operation. (see FSAR Appendix 3B).

Question No. F-16

Question: If such instability did develop, would it be automatically detected and corrected?

Answer: If such instability did develop, it would be automatically detected, and means are available for correction.

Question No. F-17

Question: If the split out-of-core neutron detectors were to become faulty, is it possible that an axial power tilt could go undetected and result in abnormal core temperatures?

Answer: No.

Question No. F-18

Question: What elements of the reactor core instrumentation system cannot be tested while the reactor is in operation?

Answer: None. (see proposed Technical Specifications, Table 4.1-1 and FSAR Section 7-4).

Question No. F-19

Question: How frequently will the reactor over-temperature and over-power trip setpoints be calibrated?

Answer: These instrument channels are routinely calibrated in accordance with the schedule specified in Table 4.1-1 of the proposed Technical Specifications under Item 1, 4 and 7. In addition, the Central Control Room Operator continuously observes these instruments and calls for tests or calibrations as required.

Question No. F-20

Question: What means will be employed to insure that the automatic protective system for axial power tilts is operable in service?

Answer: Assurance that this protective system is operable will be by a program of checking, calibrating and testing (see proposed Technical Specifications, Table 4.1-1, Items 1 and 4).

Question No. F-21

Question: Assuming the reactor was operating at 2758 Mwt and that electrical power was removed from all four reactor coolant pumps, what is the calculated maximum temperature of the fuel elements and how does it compare with the meltdown temperature?

Answer: Section 14.1.6 of the FSAR indicates the results of a loss of power to all four reactor coolant pumps while operating at 2758 Mwt. There is no DNB (Departure from Nucleate Boiling); thus, the maximum temperature of the fuel elements will be no higher than in normal operation.

Question No. F-22

Question: What is the answer to the preceeding question assuming operation at 3216 Mwt?

Answer: The answer would be the same.

Question No. F-24

Question: When the reactor is shutdown for refueling or other reasons after having been in operation, to what extent will the primary coolant system be inspected?

Answer: A detailed inspection of the primary coolant system will be performed in accordance with Section 4.2, of the proposed Technical Specifications. A schedule for this inspection is presented in Table 4.2-1.

Question No. F-27

Question: What means will be employed to detect changes in the vibration of reactor components and the presence of loose parts during operation?

Answer: As explained in the response to AEC Question 13.2 of the FSAR, no in-service vibration or loose parts monitoring is necessary on Indian Point Unit No. 2. Applicant has, however, agreed to enter into a development program with Westinghouse in which instrumentation systems are to be investigated which might, in the future, prove capable of detecting such occurrences during operation in an accurate and reliable manner. The program involves the use of the ex-core detector signals for collection of nuclear noise data indicative of core movement. Also included in the program is a study of accelerometer measurements positioned on the steam generators and the reactor vessel for the detection of signals in the frequency range expected from small loose parts.

Question No. F-30

Question: In the event of a major loss-of-coolant accident, how vital to the integrity of the containment is it to limit the temperature of the containment atmosphere?

Answer: In the event of a major loss-of-coolant accident, engineered safeguards are incorporated to limit the temperature of the containment atmosphere. The design considerations (including temperature) for the containment structure are detailed in Chapter 5 of the FSAR, Section 5.1.2 and in the containment Design Report, Section 2.0.

Question No. F-31

Question: In the event of a major loss-of-coolant accident, which of the emergency safeguard systems must function (and to what extent) to insure that the containment will not rupture?

Answer: See Section 14.3.4 of the FSAR and also first paragraph of the response to Set B, Question 13.

Question No. F-32

Question: To what extent have the emergency safeguards been designed to function in an environment of high pressure, temperature humidity and radioactivity?

Answer: (see response to FSAR Question 7.8; FSAR Pages 6.4-7, 6.4-13 et seq., 14.3.4-6 to 14.3.4-10; and response to Question 18, Set B).

Question No. F-33

Question: How often will leakage rate tests be made of the containment?

Answer: Integrated Leakage Rate Tests will be performed prior to initial plant criticality and at intervals during operations in accordance with the proposed Technical Specifications, Section 4.4. In addition, continuous leak detection testing is performed via the containment penetration and weld channel pressurization system.

Question No. F-35

Question: Has an emergency core cooling system similar to the one at Indian Point Unit No. 2 been tested? Are the test results available.

Answer: See response to Set A, Question 13. The test results are not available to the Applicant.

Question No. F-36

Question: Assuming the ECCS functions as planned, what is the maximum calculated clad temperature, and what percent is this of the meltdown temperature?

Answer: The maximum calculated clad temperature is 2215°F and this is approximately 65% of the clad melting temperature.

Question No. F-37

Question: What will be the in-service testing program for the ECCS?

Answer: A test of the Emergency Core Cooling System (Residual Heat Removal System and Safety Injection System) will be performed at each refueling outage. In addition, many components will be tested at intervals not greater than one month. (see Section 4.4 and 4.5 of the proposed Technical Specifications).

Question No. F-39

Question: Has the Containment Spray System at Indian Point Unit No. 2 been tested or will it be tested prior to startup of the reactor? If so, describe the test.

Answer: The containment spray system at Indian Point Unit No. 2 will be tested prior to startup of the reactor. The tests are described in Section 6.3.5 of the FSAR.

Question No. F-40

Question: Has a containment spray system similar to the one at Indian Point Unit No. 2 been tested?

Answer: Yes. (see response to Set B, Question 5).

Question No. F-41

Question: Please discuss the effectiveness of the CSS in removing radioactive iodine from the containment atmosphere after an accident. Is this based on experimental results or calculations?

Answer: See response to Set A, Question 38.

Question No. F-42

Question: How will the CSS be actuated in the event of an accident?

Answer: The CSS is automatically actuated by containment pressure sensors. See FSAR, Section 6.3.2.

Question No. F-43

Question: What will be the in-service testing program for the CSS?

Answer: A test of the Containment Spray System will be performed at each refueling outage. In addition, all pumps will be started at intervals not greater than one month. (see Section 4.5, Paragraphs 1.B, 11.A and 11.B.2 of the proposed Technical Specifications).

Question No. F-44

Question: Has the Fan Cooling System at Indian Point Unit No. 2 been tested or will it be tested prior to startup of the reactor?

Answer: Testing of the Fan Cooling System is underway, and will be completed before startup of the reactor.

Question No. F-45

Question: Has a fan-cooling system similar to the system at Indian Point Unit No. 2 been tested?

Answer: Yes. (see response to FSAR Question 7.8; FSAR Pages 6.4-7, 6.4-13 et seq., 14.3.4-6 to 14.3.4-10).

Question No. F-46

Question: Please discuss the effectiveness of the FCS in removing radioactive iodine from the containment atmosphere after an accident. Is this based on experimental results or calculations?

Answer: See the response to Set D, Question 112.

Question No. F-47

Question: How will the FCS be actuated in the event of an accident?

Answer: Automatically, see FSAR Section 6.4.2.

Question F-48

Question: What will be the in-service testing program for the FCS?

Answer: A test of the Fan Cooling System (Containment Air Filtration System) will be performed at each refueling outage except for the first two years when tests will be performed every six months. (see Section 4.5, Paragraph 11.C of the proposed Technical Specifications).

Question No. F-49

Question: Discuss any differences in effectiveness between the containment spray system and the fan cooling system in regard to removal of radioactive iodine and heat from the containment atmosphere.

Answer: The differences in the heat removal rate for the spray system and fan cooling system are discussed in detail in Section 6.3 and 6.4 respectively of the FSAR. The effectiveness of these systems is further detailed in Section 14.3.4.

The differences in radioactive iodine removal effectiveness of the chemically-treated spray system and fan cooler filter system is given in Section 14.3.5 of the FSAR.

Question No. F-51

Question: Has a post-accident hydrogen control system similar to the one planned for Indian Point Unit No. 2 been tested?

Answer: Yes (see response to Set A, Question 42 and Set B, Question 18).

Question No. F-53

Question: What will be the in-service testing program for the post-accident hydrogen control system?

Answer: A test of the Hydrogen Recombiner System will be performed at each refueling outage. In addition, each recombiner air supply blower will be started at intervals not greater than two months. (see Section 4.5, Paragraphs 1.C and 11.D of the proposed Technical Specifications).

Question No. F-54

Question: Will the prevailing meteorological conditions be considered in deciding when to make a release of gaseous effluent from Indian Point Unit No. 2?

Answer: Release of gaseous wastes from Indian Point Unit No. 2 are made in accordance with Section 3.9 of the proposed Technical Specifications. The basis for allowable discharge rates takes into account the worst combination of sector yearly average meteorology and sector distance to the site boundary.

Question No. F-55

Question: Will a record be kept of all releases of gaseous effluents from Indian Point Unit No. 2, giving particulars such as prevailing winds, total radioactivity and an inventory of isotopes?

Answer: A record will be kept of all releases of gaseous effluents in accordance with the requirements of proposed Technical Specifications, Sections 3.9, 6.5 and 6.6.

Question No. F-56

Question: During normal operation, what determines the maximum allowable release rate for gaseous effluents for a limited duration?

Answer: The maximum allowable release rate for gaseous effluents is limited by the proposed Technical Specifications. (see proposed Technical Specifications, Section 3.9, Specification C). By sampling and analysis prior to release and by the use of the installed radiation monitor in the discharge line, all releases will be kept with the limits specified.

Question No. F-57

Question: Will means be provided to automatically insure that the maximum allowable release rate for gaseous effluent is not exceeded?

Answer: Yes, gaseous releases from the plant are by way of the plant vent. The plant vent is fitted with radiation monitoring devices which trip closed the waste gas release valve prior to exceeding limits (see FSAR Sections 11.1 and 11.2).

Question No. F-58

Question: In a major loss-of-coolant accident, where the emergency core cooling system failed to operate, would the requirements of 10CFR100 be satisfied. Please discuss and give assumptions.

Answer: Yes as considered in the response to Set A, Question 9.

Question No. F-61

Question: Considerable importance is attached to the removal of radioactive iodine from the containment atmosphere following a loss-of-coolant accident. Is it possible that there could be other radioactive elements present the removal of which would be of comparable importance?

Answer: No.