Enclosure 12 to TN E-28034

Transnuclear, Inc. document E-10004, ADOC Test Report, August 21, 1997 (associated with RAI 2-4)

E- 10004

File No # 3.2

Record No #

ADOC TEST REPORT

August 21, 1997

Transnuclear, Inc.
Four Skyline Drive
Hawthorne, NY 10532-2120

REVISION CONTROL SHEET

Revision No.	Effective Date	Affected Sections	Affected Pages	Prepared by	Approval Analst Supr	Approval QA Eng.
0	12-2-87	All Sections	All Pages	P. Shih	A Hoggs	[illegible]
1	8-21-97	1,2, 3, 4	4,6-9	P. Shih	MHm	WRS

ADOC TEST REPORT

TABLE OF CONTENTS

		Page
1.0	COMPARISON WITH ANALYTIC SOLUTIONS	1
	1.1 Problem No. 1	1
	1.2 Problem No. 2	3
2.0	COMPARISONS WITH SOLUTION BASED ON ENERGY METHODS	4
	2.1 Problem No. 3	4
	2.2 Problem No. 4	7
3.0	COMPARISONS WITH ONE-THIRD SCALE MODEL TEST RESULTS	7
	3.1 Problem No. 5	8
	3.2 Problem No. 6	8
4.0	CONCLUSION	8

This test report is written in accordance with Transnuclear Quality Assurance Procedure 3.3.

It is the objective of this test report to verify the results of computer code "ADOC" for determining the maximum acceleration/deceleration G values of a cask with impact limiters dropped onto an unyielding target surface.

Three methods are used to verify the ADOC computer program. First, comparisons are made between ADOC results and analytic solutions. Complete analytic solutions are only possible for end drops and then only for simple impact limiter material properties (elastic or perfectly plastic). Approximate solutions for other drop orientations are developed from energy considerations. This is the basis for the second comparison with the ADOC solutions. Finally, comparisons are made with data obtained from tests on a one-third scale model of a similar type packaging.

A summary of the results of the verification of the ADOC program is provided in Table 1. The table lists the initial angle of impact with the target surface and the results in terms of inertia loadings and deformations calculated by the computer program ADOC as compared with the analytical solution and measured values from the model tests.

1.0 COMPARISON WITH ANALYTIC SOLUTIONS

1.1 Problem No.1 - End Drop (Angle = 90 degrees) from 30 ft.- Perfectly Plastic Analysis

The analytic solution is performed for a cask weighing 182,000 pounds and having an impact limiter with a radius of 60 inches. The crushable material in the limiters is assumed to be perfectly plastic having a crushing stress of 1300 psi. If the cask falls from 30 feet, the impact velocity is 527.5 fps, i.e. $\sqrt{2gh}$.

For an end drop (see Fig. 1) the force, F, decelerating the cask is

$$F_D = \sigma_C A = 1300 \times \pi \times 60^2$$

$$= 1.47 \times 10^7 \text{ lb.}$$

The equation of motion for the cask is,

$$\frac{W}{g} \ddot{u} = W - 1.47 \times 10^7$$

$$\ddot{u} = 386.4 - 31210 = 30830$$

where $\ddot{u}$ = vertical acceleration of cask

Integrating and using the initial conditions:

$u(0) = 0$

$\dot{u}(0) = 527.5$

It is found that

$\dot{U} = -30830t + 527.5$

$U = -15415t^2 + 527.5$

The cask stops when $\dot{u} = 0$

or $t = \frac{527.5}{30830} = 0.017$ seconds

At this time the maximum cask displacement is

$u = -15415(0.017)^2 + 527.5(0.017) = 4.15$ in.

The deceleration is constant at,

$u = -30830$ in/sec^2 or 79.8G's

The same problem was run with the ADOC program with the result that the cask stopped at 0.017 second, the limiter crushing was 4.59 inches, and the peak deceleration was 80.1 G's. It may be seen there is excellent agreement between the two results.

A sample of the input data required for this problem is listed below. The complete set of input and output data is given in Appendix A.

Problem No. 1 ADOC Input:

Cask length	=	199.4 in.
Cover crush strength	=	1300 psi
Cask weight	=	182000 lb.
Strain limit of crush	=	0.8
Yield strain	=	0.0026
Locking modulus	=	10 psi
Cover outer radius	=	60.000 in.
Cover inner radius	=	33.375 in.
Cover length	=	32.000 in.
Cover end thickness	=	16.000 in.

1.2 Problem No. 2 - End Drop (Angle = 90 degrees) - Elastic Analysis

The same problem is considered with the material of the limiter being elastic with a modulus of 20,000 psi. The force exerted on the cover during impact is

$$F = \frac{AE}{L} u = 1.616 \times 10^7 u$$

The equation of motion is,

$$\frac{W}{g} \ddot{u} + 1.616 \times 10^7 u = W$$

For the same initial conditions stated above, this has the solution

$$u = 2.837 \text{ Sin}(185.2t) + 0.0113 (1 - \text{Cos } 185.2t)$$

This solution is valid until $\dot{u} = o$ which occurs at $t = 0.017$ seconds

At this time the cask separates (rebounds) off the impact surface and is subjected to a constant acceleration (gravitational consistant). The solution is shown below and plotted as the solid covers on Fig. 2 with the ADOC solution shown as (x). As indicated there is excellent agreement between the analytical solution with the ADOC program.

Problem No. 2 ADOC Input:

Cask length	=	199.4 in.
Cover crush strength	=	10000 psi
Cask weight	=	182000 lb.
Strain limit of crush	=	0.8
Yield strain	=	0.50
Locking modulus	=	10 psi
Cover outer radius	=	60.000 in.
Cover inner radius	=	33.375 in.
Cover length	=	32.000 in.
Cover end thickness	=	16.000 in.

The results are as follows:

	ANALYTICAL SOLUTION		"ADOC SOLUTION"	
Time (sec.)	Crush Distance (inches)	Cask Deceleration (G's)	Crush Distance (inches)	Cask Deceleration (G's)
0.000	0.000	1	0.00	1
.002	1.028	91	1.03	80
.004	1.918	170	1.95	151
.006	2.549	226	2.63	204
.008	2.836	252	3.00	233
.010	2.740	243	3.01	234
.012	2.274	202	2.67	207
.014	1.501	133	2.01	156
.016	0.526	47	1.11	86
.017	0.003	1	0.60	46

2.0 COMPARISONS WITH SOLUTION BASED ON ENERGY METHODS

2.1 Problem No. 3 - Side Drop (Angle = 0 degrees) from 30 ft. - Perfectly Plastic Analysis

Solutions for other drop orientations are obtained by equating the energy absorbed in crushing the limiters to the potential energy of the cask prior to the drop. This is illustrated for the end drop discussed above. The potential energy of the cask is equal to the cask weight, W, times the height of the drop, H. The energy absorbed by the limiter is the force, which is equal to the crush stress, , times the limiter area, A, times the amount of crushing.

Equating the two,

$$WH = FU_{max} = \sigma_c A U_{max}$$

Therefore,

$$u_{max} = \frac{WH}{A} = \frac{182000 \times 360}{1300\,\pi\,(60)^2} = 4.46 \text{ in.}$$

Note that this compares well with the more precise calculation above where

U_{max} = 4.51 in.

Consider a horizontal, i.e. side, drop with the cask geometry as shown in Fig. 3. The force and energy developed as each of the covers crushes is shown as Fig. 3b. The force (df) acting on an element $Rd\theta$ is

$$df = \sigma_c B R_o \cos\theta \, d\theta$$

The energy absorbed as this element deforms is

$$dE = df\,[A - Ro(1 - \cos\theta)]$$

$$= \sigma_c Ro^2 B \cos\theta [\cos\theta - \cos\theta_o]\, d\theta$$

The total energy absorbed in each of the limiters is obtained by integrating the above,

$$E = 2\sigma_c Ro^2 B \int_0^{\theta_o} \cos\theta [\cos\theta - \cos\theta_o]\, d\theta$$

$$= \sigma_c Ro^2 B\left(\theta_o - \frac{\sin 2\theta_o}{2}\right)$$

The total force in each of the limiters in

$$F = 2\sigma_c B R_o \sin\theta_o$$

A horizontal drop case is evaluated using the following parameters.

Ro = outside radius of limiters, 60 in.
Ri = inside radius of limiter, 33.38 in.
σ_c = crush stress, 4500 psi
B = length of limiter on side which crushes, 16 in.
W = 182000 lb.
H = 360 in.

The total energy to be absorbed is

WH = 182000 x 360

This must be equal to the energy absorbed by deformation of each of the two covers,

$$WH = 2\sigma_c Ro^2 B \left(\theta_o - \frac{\sin 2\theta_o}{2}\right)$$

$$= 182000 \times 360 = 2(4500)\ 60^2 \times 16$$

The solution indicates that

θ_o = 33.7 degrees; $F = 2\sigma_c BRo \sin 33.7$

Therefore

$\Delta = R_o\ (1-\cos\theta_o)$ (See Fig. 3b)

$= 60\ (1-\cos 33.7)$

$= 10.1$ in.

The peak deceleration, G, is

$$G = \frac{\sigma_c A}{W} = 2\ (4500 \times 16 \times 2 \times 60 \sin 33.7)$$

$= 52.7$

This problem solved with the ADOC program. The resulting maximum deformation and acceleration are:

$\Delta =$ 13.5

G = 46.1 G's

The small differences, i.e. approximately 12.5%, result because ADOC solves a dynamic problem while the above analysis neglects dynamic effects.

Problem No. 3 ADOC Input:

Cask length	=	199.2 in.
Cover crush strength	=	4500 psi
Cask weight	=	182000 lb.
Strain limit of crush	=	0.7
Yield strain	=	0.0004
Locking modulus	=	12400000 psi

2.2 Problem No. Corner Drop (angle=75 degrees) from 30 ft.

A corner drop with the same parameters is also evaluated. The geometry of the deformed cover is shown on Fig. 4. An analysis similar to that performed above indicates that the energy absorbed by this deformation is

$$E = 2Ro^3 \sigma_c \cos\beta \sin\beta (1-\cos\theta_f) \times$$

$$\left\{ \left(\frac{\theta_f}{2} - \frac{\sin 2\theta_f}{4} \right) \left(\frac{\cos\theta_f}{\cos\theta_f - 1} \right) + \frac{\sin^3\theta_f}{3(1-\cos\theta_f)} \right\}$$

Equating this expression to the total energy to be absorbed (i.e. 182000 x 360) θ_f is found to be 99 degrees.

This corresponds to a deceleration of 46.8 G's and a deformation of Δ of 18 in.
The same problem is run with the ADOC program.

Problem No. 4 ADOC Input:

Cover crush strength	=	1300 psi
Strain limit of crush	=	0.9
Yield strain	=	0.0004
Locking modulus	=	10000 psi
Cover outer radius	=	60 in.
Cover inner radius	=	33.375 in.
Cover length	=	32.000 in.
Cover end thickness	=	20.000 in.

The deceleration is found to be 47.1 G's and the deformation 18 in. Once again, there is a good correlation between the two results.

3.0 COMPARISONS WITH ONE-THIRD SCALE MODEL TEST RESULTS

Drop tests were conducted on a one third scale model of the TN12. A sketch showing the dimensions of the model is shown on Fig. 5. The comparison of predicted (ADOC) and measured data is shown in Table 1. As may be seen there is very good agreement between the measured and predicted deceleration. The predicted decelerations are within 11.2% of the measured data or consertively larger. As would be expected the agreement between the measured and predicted impact limiter deformations is not quite as good. The ADOC predictions are larger than the measured deformations. The limiter deformations are only significant so that sufficient wood may be provided to avoid locking up of the wood (i.e.., reaching the locking strain).

ADOC Parameters For Problems 5 and 6:

Cask weight	=	8386 lb.
Cask length	=	76.3 in.
Cover outer radius	=	14.5 in.
Cover inner radius	=	10.77 in.
Cover length	=	5.71 in.
Cover end thickness	=	3.31 in.
Cover crush strength	=	3200 psi

3.1 Problem No. 5 - Corner Drop (Angle=77) degrees from 30 ft.

The case of interest is test no. 2 from the TN-12 Safety Analysis Report. The resultant vertical acceleration found from ADOC is 177.8 G's and the deformation is 4.42 in. The test acceleration and deformation are 205 G's and 3.27 inches respectively. The ADOC and actual values are in good agreement considering the uncertainty of all the test conditions.

3.2 Problem No. 6 - End Drop (Angle = 90 degrees) from 30 ft.

The test case considered is test no. 5 from the TN-12 SAR. The cask is dropped in a vertical orientation from 30 ft. resulting in a maximum G loading of 265 G's and a measured cover deformation of 1.06 inches. ADOC results are 251.9 G's and 1.61 inches.

The output data sheets for the six test problems are provided in appendix 1.

4.0 CONCLUSION

The maximum acceleration/deceleration G values obtained by ADOC are a good representation of the actual behavior of a cask with impact limiters dropped onto an unyielding surface. Any error in the ADOC values that is not within 15% of the actual value is conservatively larger and may still be used in the design of the impact limiters, cask and cask components.

TABLE 1: COMPARISON OF ADOC COMPUTER PROGRAM RESULTS
WITH ANALYTICAL SOLUTIONS AND TEST RESULTS

PROB.NO.	INITIAL ANGLE OF IMPACT (DEG.)	CASK DROP HEIGHT (FT.)	INERTIA, G			DEFORMATION, IN.			% ERROR (G'S ONLY)
			ADOC	ANALYTIC SOLUTION	TEST	ADOC	ANALYTIC SOLUTION	TEST	
1	90	30	80.1	79.8	--	4.59	4.15	--	0.37
2	90	30	234.0	252.0	--	3.01	2.84	--	7.1
3	0	30	46.1	52.7	--	13.5	10.1	--	12.5
4	75	30	47.1	46.8	--	18.0	18.0	--	0.64
5	77	30	177.8	--	205.0	4.42	--	3.27	13.3
6	90	30	251.9	--	265.0	1.61	--	1.06	4.9

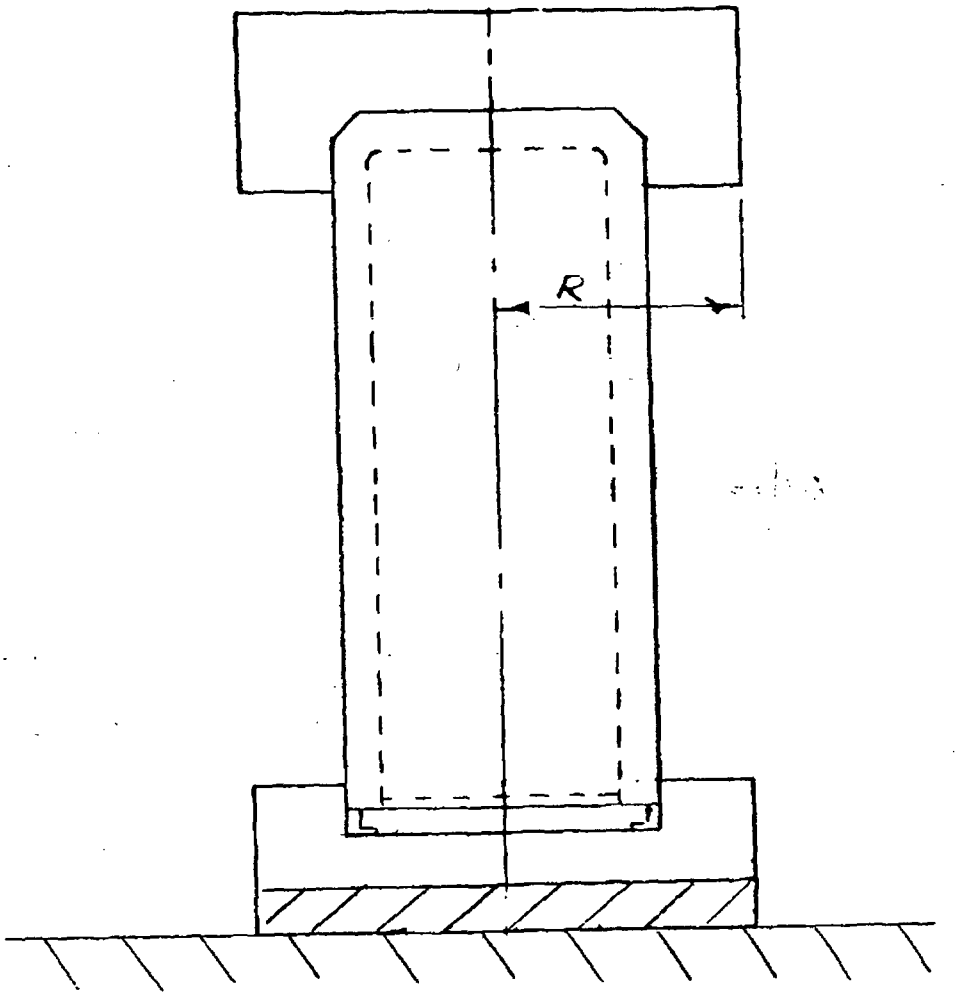

FIG. 1 - END DROP

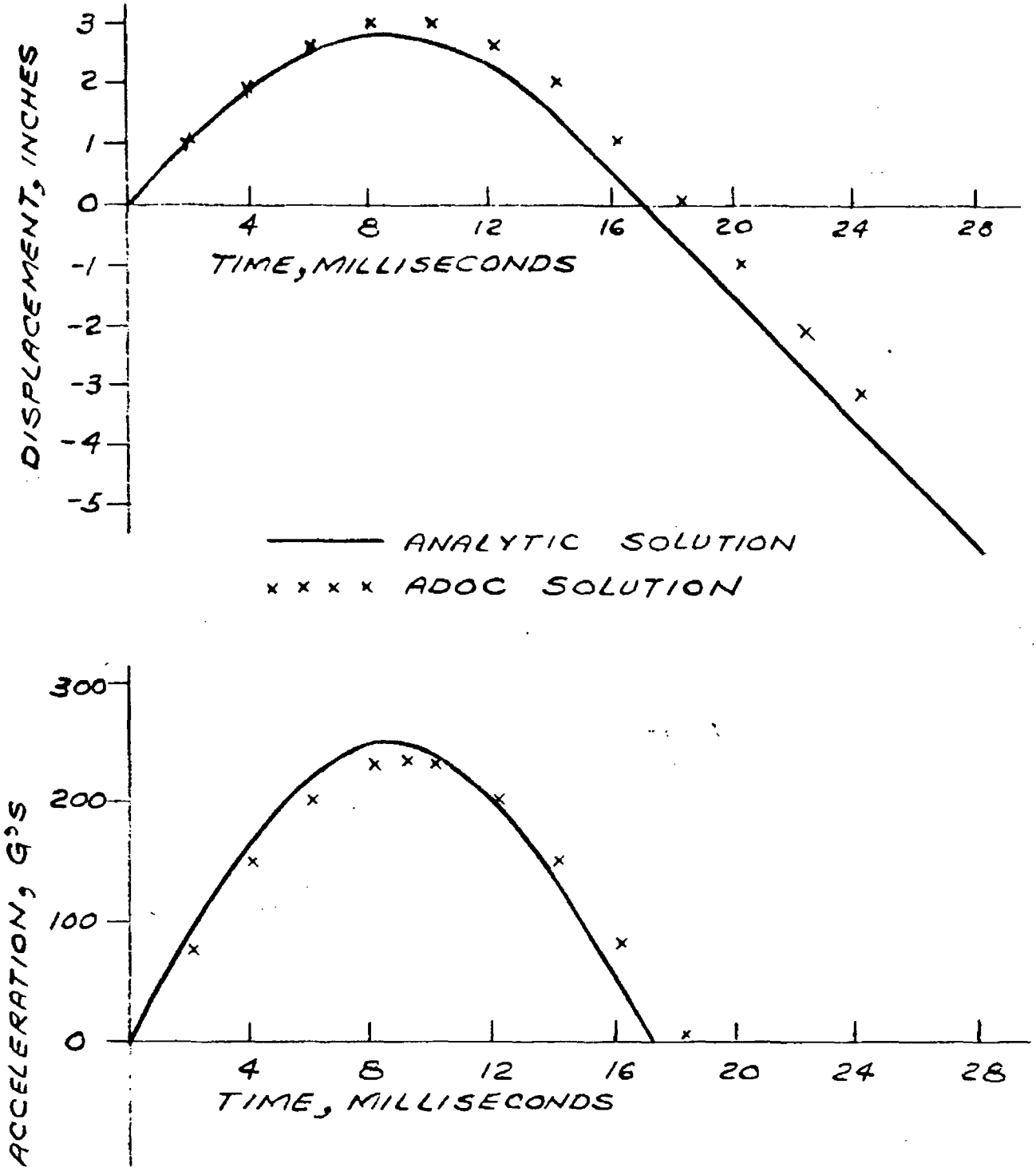

FIG 2- ANALYTIC & ADOC SOLUTIONS FOR PROBLEM NO. 2

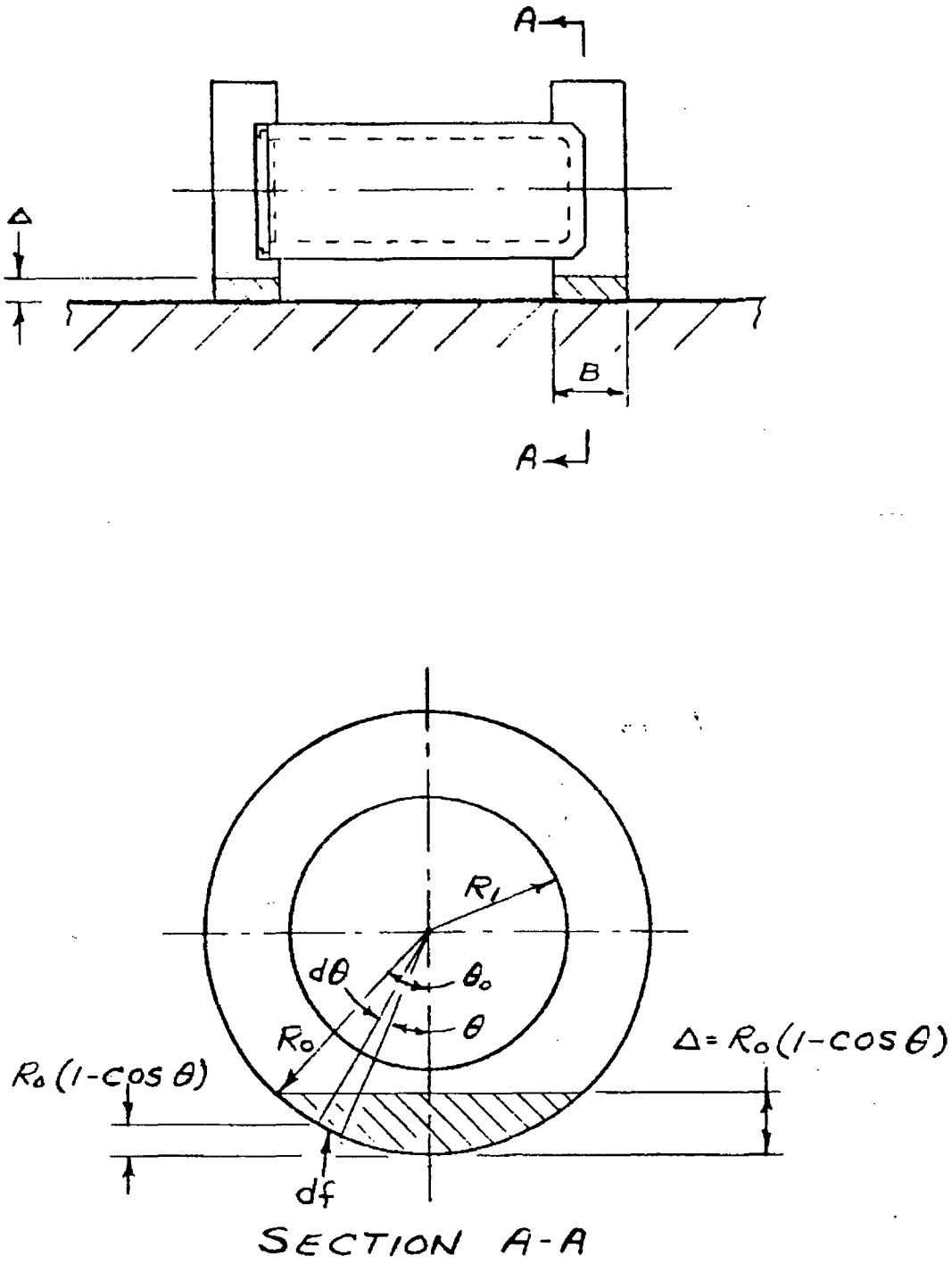

FIG. 3 SIDE DROP

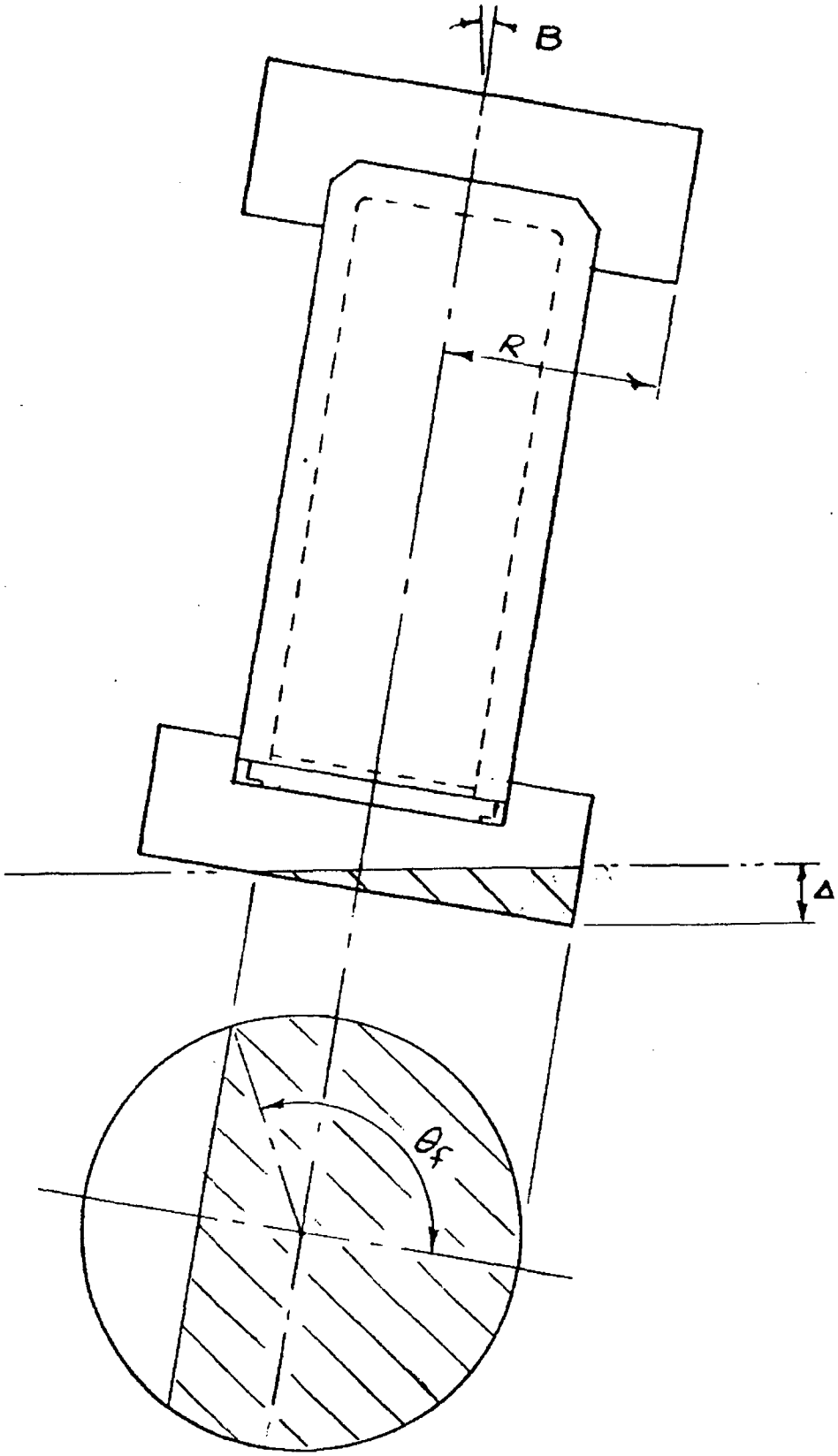

FIG 4 - CORNER DROP

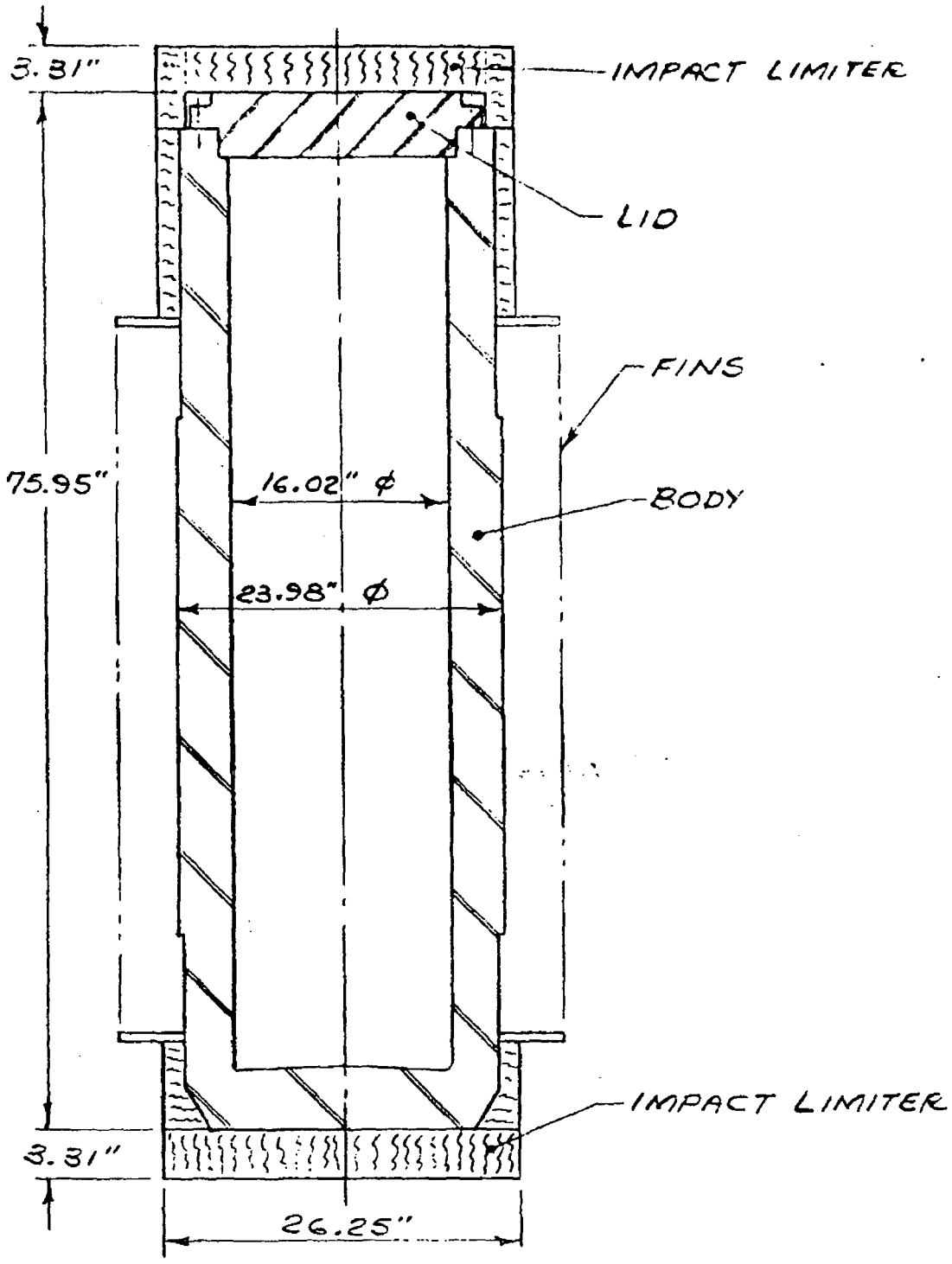

FIG 5- TN-12 1/3 SCALE
MODEL DIMENSIONS

APPENDIX 1 to E-10004

ADOC DATA SHEETS

PROBLEM NOS. 1 THROUGH 6

```
VERIFICATION PROBLEM NO. 1 - END DROP - PERFECT PLASTIC   DATE:10-23-87

    CASK LENGTH =   199.400  INCHES
    LOCATION OF CG =       .500  *LENGTH
    CASK WEIGHT =182000.000  POUNDS
    CASK ROTARY INERTIA =     .100E+05  POUND IN.SEC**2

    HEIGHT OF DROP =   360.000  INCHES
    ANGLE OF CASK CL WITH RESPECT TO HORIZ. =    90.000  DEG
    IMPACT VELOCITY =     .527E+03  IN./SEC


    MAX TIME =     .0250  SEC
    TIME STEP =    .00100  SEC
    PRINT EVERY     1  TIME STEPS
```

#1

```
     C O V E R   P R O P E R T I E S

OUTER RADIUS =     60.000 INCHES
INNER RADIUS =     33.375 INCHES
THICKNESS COVER 1 =     32.000 INCHES
THICKNESS COVER 2 =     32.000 INCHES
OUTER THICKNESS COVER 1 =     16.000 INCHES
OUTER THICKNESS COVER 2 =     16.000 INCHES
NUMBER OF SEGMENTS BOTTOM =    20
NUMBER OF SEGMENTS SIDE =    10


     MATERIAL   1  PROPERTIES
CRUSHING STRENGTH =  1300.000 PSI
YIELD STRAIN =     .00260
UNLOADING MODULUS =        .100E+02 PSI
STRAIN LIMIT OF CRUSHING =     .80000
LOCKING MODULUS =        .100E+02 PSI
HARDER MAT CRUSH STRENGTH =  1300.000 PSI
STRAIN FOR TRANSFER TO HARD MAT =     .00260

     MATERIAL   2  PROPERTIES
CRUSHING STRENGTH =  1300.000 PSI
YIELD STRAIN =     .00260
UNLOADING MODULUS =        .100E+02 PSI
STRAIN LIMIT OF CRUSHING =     .80000
LOCKING MODULUS =        .100E+02 PSI
HARDER MAT CRUSH STRENGTH =  1300.000 PSI
STRAIN FOR TRANSFER TO HARD MAT =     .00260

     MATERIAL   3  PROPERTIES
CRUSHING STRENGTH =  1300.000 PSI
YIELD STRAIN =     .00260
UNLOADING MODULUS =        .100E+02 PSI
STRAIN LIMIT OF CRUSHING =     .80000
LOCKING MODULUS =        .100E+02 PSI
HARDER MAT CRUSH STRENGTH =  1300.000 PSI
STRAIN FOR TRANSFER TO HARD MAT =     .00260

FRICTION COEFFICIENT =       .200


COUNT    1.000 TIMES NON BACKED UP FORCES
```

#1

TIME	DEFORMATIONS VERTICAL	HORIZONTAL	ROTATION	MODE	BOTTOM COVER DELTA	PHI	MAX STRAIN	MODE	TOP COVER DELTA
.0000	.000E+00	.000E+00	.000E+00	0	.0000	.0000	.0000	0	.0000
.0010	.517E+00	-.377E-07	-.326E-09	1	.5172	.0000	.0323	0	.0000
.0020	.100E+01	-.188E-06	-.163E-08	1	1.0035	.0000	.0627	0	.0000
.0030	.146E+01	-.452E-06	-.391E-08	1	1.4588	.0000	.0912	0	.0000
.0040	.188E+01	-.829E-06	-.717E-08	1	1.8832	.0000	.1177	0	.0000
.0050	.228E+01	-.132E-05	-.114E-07	1	2.2767	.0000	.1423	0	.0000
.0060	.264E+01	-.192E-05	-.166E-07	1	2.6392	.0000	.1650	0	.0000
.0070	.297E+01	-.264E-05	-.228E-07	1	2.9708	.0000	.1857	0	.0000
.0080	.327E+01	-.347E-05	-.300E-07	1	3.2714	.0000	.2045	0	.0000
.0090	.354E+01	-.442E-05	-.382E-07	1	3.5412	.0000	.2213	0	.0000
.0100	.378E+01	-.548E-05	-.474E-07	1	3.7799	.0000	.2362	0	.0000
.0110	.399E+01	-.665E-05	-.575E-07	1	3.9878	.0000	.2492	0	.0000
.0120	.416E+01	-.794E-05	-.687E-07	1	4.1647	.0000	.2603	0	.0000
.0130	.431E+01	-.935E-05	-.808E-07	1	4.3107	.0000	.2694	0	.0000
.0140	.443E+01	-.109E-04	-.939E-07	1	4.4257	.0000	.2766	0	.0000
.0150	.451E+01	-.125E-04	-.108E-06	1	4.5098	.0000	.2819	0	.0000
.0160	.456E+01	-.143E-04	-.123E-06	1	4.5630	.0000	.2852	0	.0000
.0170	.459E+01	-.161E-04	-.139E-06	1	4.5852	.0000	.2866	0	.0000
.0180	.458E+01	-.181E-04	-.157E-06	1	4.5765	.0000	.2868	0	.0000
.0190	.454E+01	-.202E-04	-.175E-06	1	4.5369	.0000	.2868	0	.0000
.0200	.447E+01	-.225E-04	-.194E-06	1	4.4663	.0000	.2868	0	.0000
.0210	.436E+01	-.248E-04	-.214E-06	1	4.3648	.0000	.2868	0	.0000
.0220	.423E+01	-.273E-04	-.236E-06	1	4.2323	.0000	.2868	0	.0000
.0230	.407E+01	-.299E-04	-.258E-06	1	4.0690	.0000	.2868	0	.0000
.0240	.387E+01	-.326E-04	-.281E-06	1	3.8747	.0000	.2868	0	.0000

#1

FORCE OUTPUT..UNITS KIPS, INCHES, GS

TIME	FORCE-1 DST TO CG	FORCE-2 DST TO CG	HOR FORCE	ACCEL VERTICAL	ACCEL HORIZONTAL	ACCEL ROTATION
.0000	.00	.00	.00	.00	.00	.00000
	.000	.000				
.0010	14753.29	.00	-.05	-80.06	.00	-.00000
	-.000	.000				
.0020	14753.29	.00	-.05	-80.06	.00	-.00000
	-.000	.000				
.0030	.00	.00	.00	.00	.00	.00000
	.000	.000				
.0040	14753.29	.00	-.05	-80.06	.00	-.00000
	-.000	.000				
.0050	14753.29	.00	-.05	-80.06	.00	-.00000
	-.000	.000				
.0060	14753.29	.00	-.05	-80.06	.00	-.00000
	-.000	.000				
.0070	14753.29	.00	-.05	-80.06	.00	-.00000
	-.000	.000				
.0080	14753.29	.00	-.05	-80.06	.00	-.00000
	-.000	.000				
.0090	14753.29	.00	-.05	-80.06	.00	-.00000
	-.000	.000				
.0100	14753.29	.00	-.05	-80.06	.00	-.00000
	-.000	.000				
.0110	14753.29	.00	-.05	-80.06	.00	-.00000
	-.000	.000				
.0120	14753.29	.00	-.05	-80.06	.00	-.00000
	-.000	.000				
.0130	14753.29	.00	-.05	-80.06	.00	-.00000
	-.000	.000				
.0140	14753.29	.00	-.06	-80.06	.00	-.00000
	-.000	.000				
.0150	14753.29	.00	-.06	-80.06	.00	-.00000
	-.000	.000				
.0160	14753.29	.00	-.06	-80.06	.00	-.00000
	-.000	.000				
.0170	14753.29	.00	-.06	-80.06	.00	-.00000
	-.000	.000				
.0180	14753.20	.00	-.06	-80.06	.00	-.00000
	-.000	.000				
.0190	14752.92	.00	-.06	-80.06	.00	-.00000
	-.000	.000				
.0200	14752.42	.00	-.06	-80.06	.00	-.00000
	-.000	.000				
.0210	14751.70	.00	-.06	-80.05	.00	-.00000
	-.000	.000				
.0220	14750.76	.00	-.06	-80.05	.00	-.00000
	-.000	.000				
.0230	14749.60	.00	-.06	-80.04	.00	-.00000
	-.000	.000				
.0240	14748.22	.00	-.06	-80.03	.00	-.00000
	-.000	.000				
.0250	14746.62	.00	-.06	-80.03	.00	-.00000
	-.000	.000				

#1

TIME	AXIAL ACCEL (G'S)	NORMAL ACCEL AT CENTER OF GRAV	TOP	BOTTOM
.0000	-.100E+01	-.362E-05	-.362E-05	-.362E-05
.0010	.801E+02	-.277E-05	-.255E-03	.249E-03
.0020	.801E+02	-.277E-05	-.255E-03	.249E-03
.0030	.801E+02	-.315E-05	-.256E-03	.249E-03
.0040	.801E+02	-.392E-05	-.257E-03	.249E-03
.0050	.801E+02	-.392E-05	-.257E-03	.249E-03
.0060	.801E+02	-.512E-05	-.259E-03	.249E-03
.0070	.801E+02	-.532E-05	-.260E-03	.249E-03
.0080	.801E+02	-.533E-05	-.260E-03	.249E-03
.0090	.801E+02	-.653E-05	-.262E-03	.249E-03
.0100	.801E+02	-.654E-05	-.262E-03	.249E-03
.0110	.801E+02	-.661E-05	-.262E-03	.249E-03
.0120	.801E+02	.287E-05	-.253E-03	.258E-03
.0130	.801E+02	-.189E-05	-.261E-03	.258E-03
.0140	.801E+02	-.309E-05	-.264E-03	.258E-03
.0150	.801E+02	-.316E-05	-.264E-03	.258E-03
.0160	.801E+02	-.399E-05	-.265E-03	.257E-03
.0170	.801E+02	-.502E-05	-.267E-03	.257E-03
.0180	.801E+02	-.547E-05	-.268E-03	.257E-03
.0190	.801E+02	-.959E-05	-.276E-03	.257E-03
.0200	.801E+02	-.778E-06	-.268E-03	.266E-03
.0210	.801E+02	-.130E-05	-.269E-03	.266E-03
.0220	.800E+02	-.396E-05	-.274E-03	.266E-03
.0230	.800E+02	-.553E-05	-.276E-03	.265E-03
.0240	.800E+02	-.779E-05	-.281E-03	.265E-03
.0250	.800E+02	.147E-05	-.272E-03	.274E-03

MAXIMUM ACCELERATIONS

MAX AXIAL = 80.062 G'S
MAX TRANS CG = .000 G'S
MAX TRANS TOP = .000 G'S
MAX TRANS BOT = .000 G'S

#1

```
      ACCELERATIONS (G'S)
A = AXIAL ACC
G = TRANS ACC CG
T = TRANS ACC TOP
B = TRANS ACC BOT
-1.0      10.6      22.2      33.7      45.3      56.9      68.5      80.1
-----------------------------------------------------------------------------
B         I         I         I         I         I         I         I
B         I         I         I         I         I         I        AI
B         I         I         I         I         I         I        AI
B         I         I         I         I         I         I        AI
B         I         I         I         I         I         I        AI
B         I         I         I         I         I         I        AI
B         I         I         I         I         I         I        AI
B         I         I         I         I         I         I        AI
B         I         I         I         I         I         I        AI
B---------I---------I---------I---------I---------I---------I--------AITIME =    .0090
B         I         I         I         I         I         I        AI
B         I         I         I         I         I         I        AI
B         I         I         I         I         I         I        AI
B         I         I         I         I         I         I        AI
B         I         I         I         I         I         I        AI
B         I         I         I         I         I         I        AI
B         I         I         I         I         I         I        AI
B         I         I         I         I         I         I        AI
B         I         I         I         I         I         I       A I
B---------I---------I---------I---------I---------I---------I-------A-ITIME =    .0190
B         I         I         I         I         I         I       A I
B         I         I         I         I         I         I       A I
B         I         I         I         I         I         I       A I
B         I         I         I         I         I         I       A I
B         I         I         I         I         I         I       A I
B         I         I         I         I         I         I       A I
```

#1

DEFORMED SHAPE OF COVER 1

```
-----------------------------
I                           XXI
I                           XXI
I                           XXI
I                           XXI
I                           XXI
I                           XXI
I                           XXI
I                           XXI
I                           XXI
I                           XXI
----------------            XXI
               I            XXI
               I            XXI
               I            XXI
               I            XXI
               I            XXI
               I            XXI
               I            XXI
               I            XXI
               I            XXI
               I            XXI
               I            XXI
               I            XXI
               I            XXI
               I            XXI
               I            XXI
               I            XXI
               I            XXI
               I            XXI
               I            XXI
               I            XXI
               I            XXI
               I            XXI
               I            XXI
               I            XXI
               I            XXI
               I            XXI
               I            XXI
               I            XXI
               I            XXI
               I            XXI
               I            XXI
               I            XXI
----------------            XXI
I                           XXI
I                           XXI
I                           XXI
I                           XXI
I                           XXI
I                           XXI
I                           XXI
I                           XXI
I                           XXI
I                           XXI
-----------------------------
```

```
VERIFICATION PROBLEM NO. 2 - END DROP -     ELASTIC       DATE:10-23-87

    CASK LENGTH =   199.400  INCHES
    LOCATION OF CG =       .500  *LENGTH
    CASK WEIGHT =182000.000  POUNDS
    CASK ROTARY INERTIA =     .100E+05  POUND IN.SEC**2

    HEIGHT OF DROP =   360.000  INCHES
    ANGLE OF CASK CL WITH RESPECT TO HORIZ. =    90.000  DEG
    IMPACT VELOCITY =     .527E+03  IN./SEC


    MAX TIME =     .0300  SEC
    TIME STEP =    .00100  SEC
    PRINT EVERY     1  TIME STEPS
```

#2

```
     C O V E R   P R O P E R T I E S

OUTER RADIUS =     60.000 INCHES
INNER RADIUS =     33.375 INCHES
THICKNESS COVER 1 =     32.000 INCHES
THICKNESS COVER 2 =     32.000 INCHES
OUTER THICKNESS COVER 1 =     16.000 INCHES
OUTER THICKNESS COVER 2 =     16.000 INCHES
NUMBER OF SEGMENTS BOTTOM =    20
NUMBER OF SEGMENTS SIDE =   10


     MATERIAL   1  PROPERTIES
CRUSHING STRENGTH = 10000.000 PSI
YIELD STRAIN =     .50000
UNLOADING MODULUS =        .100E+02 PSI
STRAIN LIMIT OF CRUSHING =     .80000
LOCKING MODULUS =        .100E+02 PSI
HARDER MAT CRUSH STRENGTH = 10000.000 PSI
STRAIN FOR TRANSFER TO HARD MAT =     .50000

     MATERIAL   2  PROPERTIES
CRUSHING STRENGTH = 10000.000 PSI
YIELD STRAIN =     .50000
UNLOADING MODULUS =        .100E+02 PSI
STRAIN LIMIT OF CRUSHING =     .80000
LOCKING MODULUS =        .100E+02 PSI
HARDER MAT CRUSH STRENGTH = 10000.000 PSI
STRAIN FOR TRANSFER TO HARD MAT =     .50000

     MATERIAL   3  PROPERTIES
CRUSHING STRENGTH = 10000.000 PSI
YIELD STRAIN =     .50000
UNLOADING MODULUS =        .100E+02 PSI
STRAIN LIMIT OF CRUSHING =     .80000
LOCKING MODULUS =        .100E+02 PSI
HARDER MAT CRUSH STRENGTH = 10000.000 PSI
STRAIN FOR TRANSFER TO HARD MAT =     .50000

FRICTION COEFFICIENT =       .200


COUNT     1.000 TIMES NON BACKED UP FORCES
```

#2

TIME	DEFORMATIONS VERTICAL	HORIZONTAL	ROTATION	MODE	BOTTOM COVER DELTA	PHI	MAX STRAIN	MODE	TOP COVER DELTA
.0000	.000E+00	.000E+00	.000E+00	0	.0000	.0000	.0000	0	.0000
.0010	.525E+00	-.956E-08	-.827E-10	1	.5250	.0000	.0328	0	.0000
.0020	.103E+01	-.760E-07	-.657E-09	1	1.0346	.0000	.0647	0	.0000
.0030	.151E+01	-.255E-06	-.220E-08	1	1.5135	.0000	.0946	0	.0000
.0040	.195E+01	-.598E-06	-.517E-08	1	1.9474	.0000	.1217	0	.0000
.0050	.232E+01	-.115E-05	-.997E-08	1	2.3231	.0000	.1452	0	.0000
.0060	.263E+01	-.196E-05	-.170E-07	1	2.6294	.0000	.1643	0	.0000
.0070	.286E+01	-.306E-05	-.264E-07	1	2.8571	.0000	.1786	0	.0000
.0080	.300E+01	-.446E-05	-.386E-07	1	2.9994	.0000	.1875	0	.0000
.0090	.305E+01	-.620E-05	-.536E-07	1	3.0519	.0000	.1907	0	.0000
.0100	.301E+01	-.827E-05	-.715E-07	1	3.0131	.0000	.1910	0	.0000
.0110	.288E+01	-.107E-04	-.923E-07	1	2.8842	.0000	.1910	0	.0000
.0120	.267E+01	-.134E-04	-.116E-06	1	2.6691	.0000	.1910	0	.0000
.0130	.237E+01	-.164E-04	-.142E-06	1	2.3741	.0000	.1910	0	.0000
.0140	.201E+01	-.197E-04	-.170E-06	1	2.0082	.0000	.1910	0	.0000
.0150	.158E+01	-.232E-04	-.201E-06	1	1.5824	.0000	.1910	0	.0000
.0160	.111E+01	-.269E-04	-.233E-06	1	1.1094	.0000	.1910	0	.0000
.0170	.603E+00	-.308E-04	-.266E-06	1	.6035	.0000	.1910	0	.0000
.0180	.798E-01	-.347E-04	-.300E-06	1	.0798	.0000	.1910	0	.0000
.0190	-.448E+00	-.386E-04	-.334E-06	0	.0798	.0000	.1910	0	.0000
.0200	-.975E+00	-.425E-04	-.367E-06	0	.0798	.0000	.1910	0	.0000
.0210	-.150E+01	-.464E-04	-.401E-06	0	.0798	.0000	.1910	0	.0000
.0220	-.203E+01	-.504E-04	-.435E-06	0	.0798	.0000	.1910	0	.0000
.0230	-.255E+01	-.543E-04	-.469E-06	0	.0798	.0000	.1910	0	.0000
.0240	-.308E+01	-.582E-04	-.503E-06	0	.0798	.0000	.1910	0	.0000
.0250	-.360E+01	-.621E-04	-.537E-06	0	.0798	.0000	.1910	0	.0000
.0260	-.413E+01	-.660E-04	-.571E-06	0	.0798	.0000	.1910	0	.0000
.0270	-.465E+01	-.699E-04	-.605E-06	0	.0798	.0000	.1910	0	.0000
.0280	-.518E+01	-.739E-04	-.638E-06	0	.0798	.0000	.1910	0	.0000
.0290	-.570E+01	-.778E-04	-.672E-06	0	.0798	.0000	.1910	0	.0000

#2

FORCE OUTPUT..UNITS KIPS, INCHES, GS

TIME	FORCE-1 DST TO CG	FORCE-2 DST TO CG	HOR FORCE	ACCEL VERTICAL	ACCEL HORIZONTAL	ROTATION
.0000	.00	.00	.00	.00	.00	.00000
	.000	.000				
.0010	7447.56	.00	-.03	-39.92	.00	-.00000
	-.000	.000				
.0020	21470.69	.00	-.08	-116.97	.00	-.00000
	-.000	.000				
.0030	.00	.00	.00	.00	.00	.00000
	.000	.000				
.0040	27624.98	.00	-.10	-150.79	.00	-.00000
	-.000	.000				
.0050	32954.82	.00	-.12	-180.07	.00	-.00000
	-.000	.000				
.0060	37300.12	.00	-.14	-203.95	.00	-.00000
	-.000	.000				
.0070	40530.31	.00	-.15	-221.69	.00	-.00000
	-.000	.000				
.0080	42548.38	.00	-.16	-232.78	.00	-.00000
	-.000	.000				
.0090	43293.68	.00	-.16	-236.88	.00	-.00000
	-.000	.000				
.0100	42743.83	.00	-.16	-233.86	.00	-.00000
	-.000	.000				
.0110	40915.35	.00	-.15	-223.81	.00	-.00000
	-.000	.000				
.0120	37863.18	.00	-.14	-207.04	.00	-.00000
	-.000	.000				
.0130	33678.98	.00	-.13	-184.05	.00	-.00000
	-.000	.000				
.0140	28488.49	.00	-.11	-155.53	.00	-.00000
	-.000	.000				
.0150	22447.62	.00	-.09	-122.34	.00	-.00000
	-.000	.000				
.0160	15737.86	.00	-.06	-85.47	.00	-.00000
	-.000	.000				
.0170	8560.77	.00	-.03	-46.04	.00	-.00000
	-.000	.000				
.0180	1131.98	.00	-.00	-5.22	.00	.00000
	-.000	.000				
.0190	.00	.00	.00	1.00	.00	.00000
	.000	.000				
.0200	.00	.00	.00	1.00	.00	.00000
	.000	.000				
.0210	.00	.00	.00	1.00	.00	.00000
	.000	.000				
.0220	.00	.00	.00	1.00	.00	.00000
	.000	.000				
.0230	.00	.00	.00	1.00	.00	.00000
	.000	.000				
.0240	.00	.00	.00	1.00	.00	.00000
	.000	.000				
.0250	.00	.00	.00	1.00	.00	.00000
	.000	.000				
.0260	.00	.00	.00	1.00	.00	.00000
	.000	.000				
.0270	.00	.00	.00	1.00	.00	.00000
	.000	.000				
.0280	.00	.00	.00	1.00	.00	.00000
	.000	.000				
.0290	.00	.00	.00	1.00	.00	.00000
	.000	.000				
.0300	.00	.00	.00	1.00	.00	.00000
	.000	.000				

#2

TIME	AXIAL ACCEL (G'S)	NORMAL ACCEL AT CENTER OF GRAV	TOP	BOTTOM
.0000	-.100E+01	-.362E-05	-.362E-05	-.362E-05
.0010	.399E+02	-.338E-05	-.131E-03	.124E-03
.0020	.796E+02	-.374E-05	-.255E-03	.248E-03
.0030	.117E+03	-.211E-05	-.369E-03	.365E-03
.0040	.151E+03	-.542E-05	-.480E-03	.470E-03
.0050	.180E+03	-.302E-05	-.567E-03	.561E-03
.0060	.204E+03	-.466E-05	-.645E-03	.636E-03
.0070	.222E+03	-.868E-05	-.708E-03	.690E-03
.0080	.233E+03	-.130E-04	-.750E-03	.724E-03
.0090	.237E+03	-.170E-04	-.771E-03	.737E-03
.0100	.234E+03	.620E-05	-.742E-03	.754E-03
.0110	.224E+03	-.691E-06	-.722E-03	.721E-03
.0120	.207E+03	-.121E-06	-.667E-03	.667E-03
.0130	.184E+03	-.616E-05	-.605E-03	.592E-03
.0140	.156E+03	-.112E-04	-.522E-03	.500E-03
.0150	.122E+03	.731E-06	-.405E-03	.407E-03
.0160	.855E+02	-.293E-05	-.290E-03	.284E-03
.0170	.460E+02	-.488E-05	-.162E-03	.152E-03
.0180	.522E+01	-.362E-05	-.246E-04	.174E-04
.0190	-.100E+01	-.398E-05	-.398E-05	-.398E-05
.0200	-.100E+01	-.398E-05	-.398E-05	-.398E-05
.0210	-.100E+01	-.398E-05	-.398E-05	-.398E-05
.0220	-.100E+01	-.410E-05	-.410E-05	-.410E-05
.0230	-.100E+01	-.410E-05	-.410E-05	-.410E-05
.0240	-.100E+01	-.410E-05	-.410E-05	-.410E-05
.0250	-.100E+01	-.422E-05	-.422E-05	-.422E-05
.0260	-.100E+01	-.422E-05	-.422E-05	-.422E-05
.0270	-.100E+01	-.422E-05	-.422E-05	-.422E-05
.0280	-.100E+01	-.422E-05	-.422E-05	-.422E-05
.0290	-.100E+01	-.434E-05	-.434E-05	-.434E-05
.0300	-.100E+01	-.434E-05	-.434E-05	-.434E-05

MAXIMUM ACCELERATIONS

MAX AXIAL = 236.877 G'S
MAX TRANS CG = .000 G'S
MAX TRANS TOP = .000 G'S
MAX TRANS BOT = .000 G'S

2

```
      ACCELERATIONS (G'S)
A = AXIAL ACC
G = TRANS ACC CG
T = TRANS ACC TOP
B = TRANS ACC BOT
-1.0      33.0      67.0      100.9     134.9     168.9     202.9     236.9
-----------------------------------------------------------------------------
B         I         I         I         I         I         I         I
B         IA        I         I         I         I         I         I
B         I         I A       I         I         I         I         I
B         I         I         I  A      I         I         I         I
B         I         I         I         I  A      I         I         I
B         I         I         I         I         I A       I         I
B         I         I         I         I         I         AI        I
B         I         I         I         I         I         I   A     I
B         I         I         I         I         I         I      A  I
B---------I---------I---------I---------I---------I---------I-------A-ITIME =    .0090
B         I         I         I         I         I         I       A I
B         I         I         I         I         I         I    A    I
B         I         I         I         I         I         A         I
B         I         I         I         I         I  A      I         I
B         I         I         I         I    A    I         I         I
B         I         I         I    A    I         I         I         I
B         I         I   A     I         I         I         I         I
B         I A       I         I         I         I         I         I
B         I         I         I         I         I         I         I
B---------I---------I---------I---------I---------I---------I---------ITIME =    .0190
B         I         I         I         I         I         I         I
B         I         I         I         I         I         I         I
B         I         I         I         I         I         I         I
B         I         I         I         I         I         I         I
B         I         I         I         I         I         I         I
B         I         I         I         I         I         I         I
B         I         I         I         I         I         I         I
B         I         I         I         I         I         I         I
B         I         I         I         I         I         I         I
B---------I---------I---------I---------I---------I---------I---------ITIME =    .0290
B         I         I         I         I         I         I         I
```

#2

DEFORMED SHAPE OF COVER 1

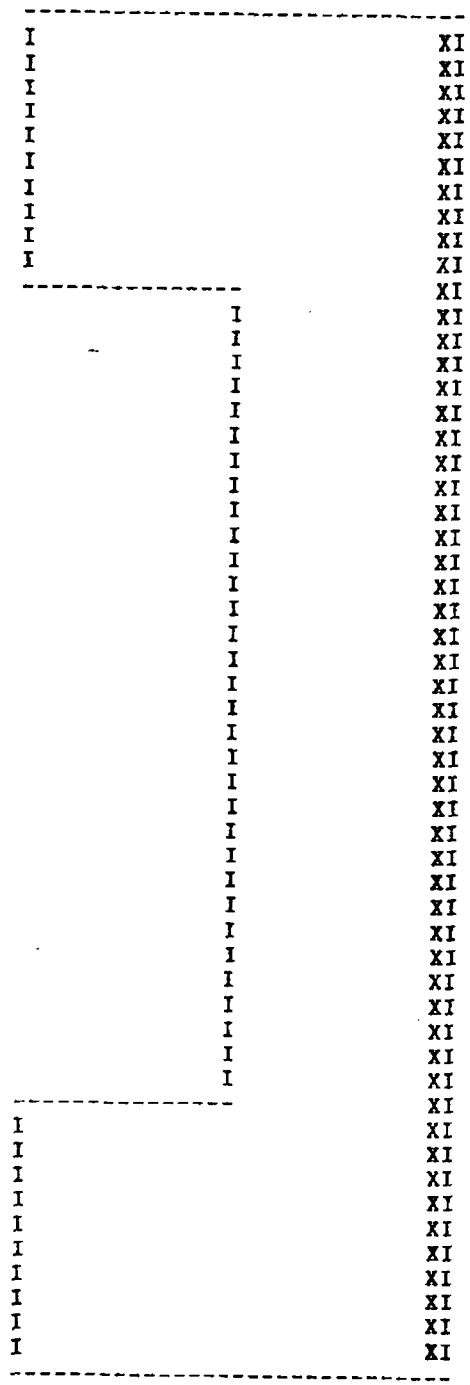

VERIFICATION PROBLEM NO. 3 - SIDE DROP DATE:10-23-87

```
CASK LENGTH =    199.200  INCHES
LOCATION OF CG =       .500  *LENGTH
CASK WEIGHT =182000.000  POUNDS
CASK ROTARY INERTIA =     .844E+06  POUND IN.SEC**2

HEIGHT OF DROP =    360.000  INCHES
ANGLE OF CASK CL WITH RESPECT TO HORIZ. =      .000  DEG
IMPACT VELOCITY =     .527E+03  IN./SEC


MAX TIME =      .0600  SEC
TIME STEP =    .00200  SEC
PRINT EVERY     1  TIME STEPS
```

#3

```
     C O V E R   P R O P E R T I E S

OUTER RADIUS =     60.000 INCHES
INNER RADIUS =     33.375 INCHES
THICKNESS COVER 1 =     32.000 INCHES
THICKNESS COVER 2 =     32.000 INCHES
OUTER THICKNESS COVER 1 =     16.000 INCHES
OUTER THICKNESS COVER 2 =     16.000 INCHES
NUMBER OF SEGMENTS BOTTOM =    20
NUMBER OF SEGMENTS SIDE =    10


     MATERIAL   1  PROPERTIES
CRUSHING STRENGTH =    195.000 PSI
YIELD STRAIN =     .00060
UNLOADING MODULUS =        .480E+05 PSI
STRAIN LIMIT OF CRUSHING =     .80000
LOCKING MODULUS =        .480E+05 PSI
HARDER MAT CRUSH STRENGTH =    195.000 PSI
STRAIN FOR TRANSFER TO HARD MAT =     .00060

     MATERIAL   2  PROPERTIES
CRUSHING STRENGTH =    195.000 PSI
YIELD STRAIN =     .00060
UNLOADING MODULUS =        .480E+05 PSI
STRAIN LIMIT OF CRUSHING =     .80000
LOCKING MODULUS =        .480E+05 PSI
HARDER MAT CRUSH STRENGTH =    195.000 PSI
STRAIN FOR TRANSFER TO HARD MAT =     .00060

     MATERIAL   3  PROPERTIES
CRUSHING STRENGTH =   4500.000 PSI
YIELD STRAIN =     .00040
UNLOADING MODULUS =        .124E+07 PSI
STRAIN LIMIT OF CRUSHING =     .70000
LOCKING MODULUS =        .124E+07 PSI
HARDER MAT CRUSH STRENGTH =   4500.000 PSI
STRAIN FOR TRANSFER TO HARD MAT =     .00040

FRICTION COEFFICIENT =       .200


COUNT     1.000 TIMES NON BACKED UP FORCES
```

#3

TIME	DEFORMATIONS VERTICAL	HORIZONTAL	ROTATION	MODE	BOTTOM COVER DELTA	PHI	MAX STRAIN	MODE	TOP COVER DELTA
.0000	.000E+00	.000E+00	.000E+00	0	.0000	.0000	.0000	0	.0000
.0020	.106E+01	.000E+00	.000E+00	3	1.0557	1.5708	.0000	3	1.0557
.0040	.211E+01	.000E+00	.000E+00	3	2.1129	1.5708	.0000	3	2.1129
.0060	.317E+01	.000E+00	.000E+00	3	3.1717	1.5708	.0064	3	3.1717
.0080	.420E+01	-.360E-09	-.601E-11	3	4.2018	1.5708	.0451	3	4.2018
.0100	.519E+01	.327E-03	.545E-05	3	5.1878	1.5708	.0822	3	5.1891
.0120	.613E+01	.980E-03	.163E-04	3	6.1296	1.5708	.1175	3	6.1334
.0140	.703E+01	.196E-02	.327E-04	3	7.0272	1.5708	.1513	3	7.0348
.0160	.789E+01	.327E-02	.545E-04	3	7.8806	1.5708	.1833	3	7.8932
.0180	.870E+01	.458E-02	.763E-04	3	8.6908	1.5708	.2137	3	8.7085
.0200	.946E+01	.589E-02	.982E-04	3	9.4500	1.5708	.2423	3	9.4727
.0220	.102E+02	.671E-02	.112E-03	3	10.1444	1.5708	.2683	3	10.1702
.0240	.108E+02	.653E-02	.109E-03	3	10.7752	1.5708	.2920	3	10.8004
.0260	.114E+02	.585E-02	.974E-04	3	11.3411	1.5708	.3133	3	11.3636
.0280	.119E+02	.517E-02	.862E-04	3	11.8415	1.5708	.3321	3	11.8614
.0300	.123E+02	.400E-02	.666E-04	3	12.2778	1.5705	.3484	3	12.2932
.0320	.127E+02	.233E-02	.388E-04	3	12.6501	1.5705	.3624	3	12.6591
.0340	.130E+02	.427E-03	.707E-05	3	12.9577	1.5708	.3740	3	12.9594
.0360	.132E+02	-.134E-02	-.224E-04	3	13.1995	1.5708	.3831	3	13.1944
.0380	.134E+02	-.311E-02	-.520E-04	3	13.3759	1.5708	.3897	3	13.3639
.0400	.135E+02	-.489E-02	-.815E-04	3	13.4867	1.5708	.3939	3	13.4679
.0420	.135E+02	-.666E-02	-.111E-03	3	13.5322	1.5708	.3956	3	13.5065
.0440	.135E+02	-.868E-02	-.145E-03	3	13.5128	1.5708	.3958	3	13.4793
.0460	.134E+02	-.989E-02	-.165E-03	3	13.4466	1.5708	.3958	3	13.4085
.0480	.134E+02	-.106E-01	-.144E-03	3	13.3679	1.5705	.3958	3	13.3346
.0500	.133E+02	-.113E-01	-.122E-03	3	13.2906	1.5708	.3958	3	13.2623
.0520	.132E+02	-.120E-01	-.101E-03	3	13.2149	1.5708	.3958	3	13.1915
.0540	.131E+02	-.127E-01	-.800E-04	3	13.1408	1.5708	.3958	3	13.1223
.0560	.131E+02	-.134E-01	-.587E-04	3	13.0682	1.5705	.3958	3	13.0546
.0580	.130E+02	-.141E-01	-.375E-04	3	12.9972	1.5708	.3958	3	12.9885

#3

FORCE OUTPUT..UNITS KIPS, INCHES, GS

TIME	FORCE-1 DST TO CG	FORCE-2 DST TO CG	HOR FORCE	ACCEL VERTICAL	ACCEL HORIZONTAL	ROTATION
.0000	.00	.00	.00	.00	.00	.00000
	.000	.000				
.0020	.00	.00	.00	1.00	.00	.00000
	.000	.000				
.0040	2742.57	2742.57	.00	-29.14	.00	.00000
	92.265	-92.265				
.0060	.00	.00	.00	.00	.00	.00000
	.000	.000				
.0080	2742.57	2742.57	.00	-29.14	.00	.00000
	92.265	-92.265				
.0100	2741.08	2742.57	-1.52	-29.13	-.00	-.00014
	92.265	-92.264				
.0120	2742.57	2742.57	.06	-29.14	.00	.00000
	92.265	-92.264				
.0140	2742.57	2742.57	.11	-29.14	.00	.00001
	92.266	-92.263				
.0160	2742.57	2742.57	.19	-29.14	.00	.00002
	92.268	-92.261				
.0180	2742.57	2742.57	.27	-29.14	.00	.00002
	92.269	-92.260				
.0200	4197.11	4197.11	.50	-45.12	.00	.00005
	92.270	-92.259				
.0220	4197.11	4197.11	.57	-45.12	.00	.00005
	92.271	-92.258				
.0240	4197.11	4197.11	.56	-45.12	.00	.00005
	92.271	-92.259				
.0260	4197.11	4197.11	.50	-45.12	.00	.00005
	92.270	-92.259				
.0280	4197.11	4197.11	.44	-45.12	.00	.00004
	92.269	-92.260				
.0300	4197.11	4197.11	.34	-45.12	.00	.00003
	92.268	-92.261				
.0320	3939.22	4197.11	-259.62	-43.71	-1.43	-.02378
	92.380	-92.262				
.0340	4197.11	4197.11	.04	-45.12	.00	.00000
	92.265	-92.264				
.0360	4197.11	4197.11	-.12	-45.12	.00	-.00001
	92.263	-92.266				
.0380	4197.11	4197.11	-.27	-45.12	-.00	-.00002
	92.262	-92.267				
.0400	4197.11	4197.11	-.42	-45.12	-.00	-.00004
	92.260	-92.269				
.0420	4197.11	4197.11	-.57	-45.12	-.00	-.00005
	92.258	-92.271				
.0440	3070.83	2902.23	172.43	-31.82	.95	.01579
	92.282	-92.303				
.0460	209.53	11.95	41.91	-.22	.23	.04845
	93.555	-107.609				
.0480	.00	.00	.00	1.00	.00	.00000
	.000	.000				
.0500	.00	.00	.00	1.00	.00	.00000
	.000	.000				
.0520	.00	.00	.00	1.00	.00	.00000
	.000	.000				
.0540	.00	.00	.00	1.00	.00	.00000
	.000	.000				
.0560	.00	.00	.00	1.00	.00	.00000
	.000	.000				
.0580	.00	.00	.00	1.00	.00	.00000
	.000	.000				
.0600	.00	.00	.00	1.00	.00	.00000
	.000	.000				

#3

TIME	AXIAL ACCEL (G'S)	NORMAL ACCEL AT CENTER OF GRAV	TOP	BOTTOM
.0000	.000E+00	.100E+01	.100E+01	.100E+01
.0020	.000E+00	.100E+01	.100E+01	.100E+01
.0040	.000E+00	.100E+01	.100E+01	.100E+01
.0060	-.104E-06	-.291E+02	-.291E+02	-.291E+02
.0080	-.104E-06	-.291E+02	-.291E+02	-.291E+02
.0100	-.849E-02	-.291E+02	-.291E+02	-.291E+02
.0120	-.163E-03	-.291E+02	-.291E+02	-.291E+02
.0140	-.327E-03	-.291E+02	-.291E+02	-.291E+02
.0160	-.547E-03	-.291E+02	-.291E+02	-.291E+02
.0180	-.765E-03	-.291E+02	-.291E+02	-.291E+02
.0200	-.166E-02	-.451E+02	-.451E+02	-.451E+02
.0220	-.189E-02	-.451E+02	-.451E+02	-.451E+02
.0240	-.184E-02	-.451E+02	-.451E+02	-.451E+02
.0260	-.165E-02	-.451E+02	-.451E+02	-.451E+02
.0280	-.146E-02	-.451E+02	-.451E+02	-.451E+02
.0300	-.113E-02	-.451E+02	-.451E+02	-.451E+02
.0320	-.143E+01	-.437E+02	-.461E+02	-.413E+02
.0340	-.121E-03	-.451E+02	-.451E+02	-.451E+02
.0360	.379E-03	-.451E+02	-.451E+02	-.451E+02
.0380	.880E-03	-.451E+02	-.451E+02	-.451E+02
.0400	.138E-02	-.451E+02	-.451E+02	-.451E+02
.0420	.188E-02	-.451E+02	-.451E+02	-.451E+02
.0440	.952E+00	-.318E+02	-.302E+02	-.334E+02
.0460	.230E+00	-.217E+00	.461E+01	-.504E+01
.0480	-.144E-03	.100E+01	.100E+01	.100E+01
.0500	-.122E-03	.100E+01	.100E+01	.100E+01
.0520	-.101E-03	.100E+01	.100E+01	.100E+01
.0540	-.800E-04	.100E+01	.100E+01	.100E+01
.0560	-.587E-04	.100E+01	.100E+01	.100E+01
.0580	-.375E-04	.100E+01	.100E+01	.100E+01
.0600	-.163E-04	.100E+01	.100E+01	.100E+01

MAXIMUM ACCELERATIONS

MAX AXIAL = 1.428 G'S
MAX TRANS CG = 45.122 G'S
MAX TRANS TOP = 46.073 G'S
MAX TRANS BOT = 45.127 G'S

#3

```
        ACCELERATIONS (G'S)
  A = AXIAL ACC
  G = TRANS ACC CG
  T = TRANS ACC TOP
  B = TRANS ACC BOT
-46.1     -38.8     -31.6     -24.4     -17.1     -9.9      -2.6      4.6
 ---------------------------------------------------------------------------
 I         I         I         I         I         I         I A B     I
 I         I         I         I         I         I         I A B     I
 I         I         I         I         I         I         I A B     I
 I         I         I B       I         I         I         I A       I
 I         I         I B       I         I         I         I A       I
 I         I         I B       I         I         I         I A       I
 I         I         I B       I         I         I         I A       I
 I         I         I B       I         I         I         I A       I
 I         I         I B       I         I         I         I A       I
 I---------I---------I-B-------I---------I---------I---------I-A-------ITIME =    .0180
 B         I         I         I         I         I         I A       I
 B         I         I         I         I         I         I A       I
 B         I         I         I         I         I         I A       I
 B         I         I         I         I         I         I A       I
 B         I         I         I         I         I         I A       I
 B         I         I         I         I         I         I A       I
 T G  B    I         I         I         I         I         A         I
 B         I         I         I         I         I         I A       I
 B         I         I         I         I         I         I A       I
 B---------I---------I---------I---------I---------I---------I-A-------ITIME =    .0380
 B         I         I         I         I         I         I A       I
 B         I         I         I         I         I         I A       I
 I         I     B G T         I         I         I         I  A      I
 I         I         I         I         I         I    B    I G     T I
 I         I         I         I         I         I         I A B     I
 I         I         I         I         I         I         I A B     I
 I         I         I         I         I         I         I A B     I
 I         I         I         I         I         I         I A B     I
 I         I         I         I         I         I         I A B     I
 I---------I---------I---------I---------I---------I---------I-A-B-----ITIME =    .0580
 I         I         I         I         I         I         I A B     I
```

#3

DEFORMED SHAPE OF COVER 1

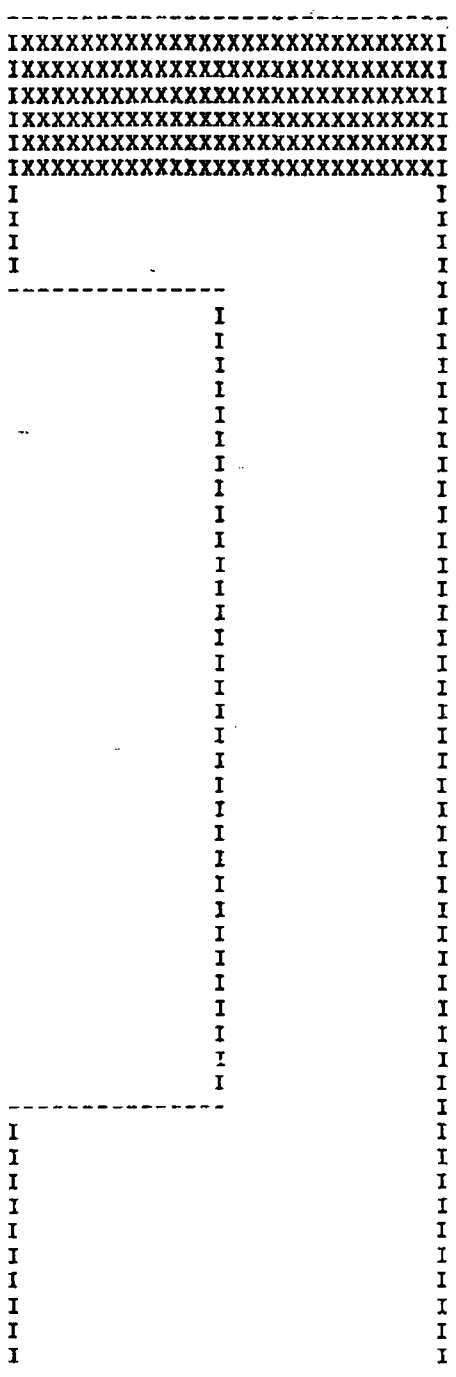

#3

DEFORMED SHAPE OF COVER 2

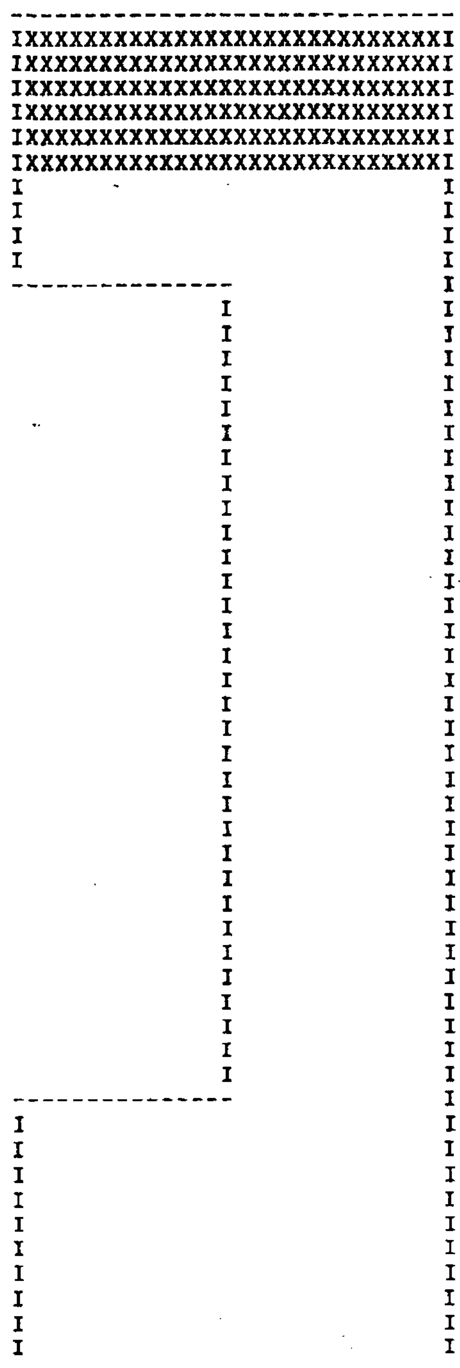

VERIFICATION PROBLEM NO. 4 - CORNER DROP DATE:10-23-87

```
CASK LENGTH =    199.200  INCHES
LOCATION OF CG =       .500  *LENGTH
CASK WEIGHT =182000.000  POUNDS
CASK ROTARY INERTIA =     .844E+06  POUND IN.SEC**2

HEIGHT OF DROP =   360.000  INCHES
ANGLE OF CASK CL WITH RESPECT TO HORIZ. =    75.000  DEG
IMPACT VELOCITY =     .527E+03  IN./SEC


MAX TIME =      .0600  SEC
TIME STEP =     .00200  SEC
PRINT EVERY      1  TIME STEPS
```

#4

```
     C O V E R   P R O P E R T I E S

OUTER RADIUS =     60.000 INCHES
INNER RADIUS =     33.375 INCHES
THICKNESS COVER 1 =     32.000 INCHES
THICKNESS COVER 2 =     32.000 INCHES
OUTER THICKNESS COVER 1 =     20.000 INCHES
OUTER THICKNESS COVER 2 =     20.000 INCHES
NUMBER OF SEGMENTS BOTTOM =    20
NUMBER OF SEGMENTS SIDE =    10


     MATERIAL   1  PROPERTIES
CRUSHING STRENGTH =  1300.000 PSI
YIELD STRAIN =     .00040
UNLOADING MODULUS =        .100E+05 PSI
STRAIN LIMIT OF CRUSHING =     .90000
LOCKING MODULUS =        .100E+05 PSI
HARDER MAT CRUSH STRENGTH =  1300.000 PSI
STRAIN FOR TRANSFER TO HARD MAT =     .00040

     MATERIAL   2  PROPERTIES
CRUSHING STRENGTH =  1300.000 PSI
YIELD STRAIN =     .00040
UNLOADING MODULUS =        .100E+05 PSI
STRAIN LIMIT OF CRUSHING =     .90000
LOCKING MODULUS =        .100E+05 PSI
HARDER MAT CRUSH STRENGTH =  1300.000 PSI
STRAIN FOR TRANSFER TO HARD MAT =     .00040

     MATERIAL   3  PROPERTIES
CRUSHING STRENGTH =  1300.000 PSI
YIELD STRAIN =     .00040
UNLOADING MODULUS =        .100E+05 PSI
STRAIN LIMIT OF CRUSHING =     .90000
LOCKING MODULUS =        .100E+05 PSI
HARDER MAT CRUSH STRENGTH =  1300.000 PSI
STRAIN FOR TRANSFER TO HARD MAT =     .00040

FRICTION COEFFICIENT =       .200


COUNT    1.000 TIMES NON BACKED UP FORCES
```

#4

TIME	DEFORMATIONS VERTICAL	HORIZONTAL	ROTATION	MODE	BOTTOM COVER DELTA	PHI	MAX STRAIN	MODE	TOP COVER DELTA
.0000	.000E+00	.000E+00	.000E+00	0	.0000	.0000	.0000	0	.0000
.0020	.106E+01	.000E+00	.000E+00	2	1.0929	.2618	.0084	0	.0000
.0040	.211E+01	-.266E-03	-.203E-05	2	2.1857	.2618	.0403	0	.0000
.0060	.316E+01	-.110E-02	-.841E-05	2	3.2761	.2618	.0721	0	.0000
.0080	.421E+01	-.287E-02	-.219E-04	2	4.3611	.2618	.1037	0	.0000
.0100	.525E+01	-.589E-02	-.450E-04	2	5.4369	.2618	.1351	0	.0000
.0120	.628E+01	-.104E-01	-.795E-04	2	6.4997	.2617	.1661	0	.0000
.0140	.729E+01	-.167E-01	-.127E-03	2	7.5451	.2617	.1966	0	.0000
.0160	.828E+01	-.247E-01	-.188E-03	2	8.5684	.2616	.2264	0	.0000
.0180	.925E+01	-.344E-01	-.263E-03	2	9.5650	.2615	.2555	0	.0000
.0200	.102E+02	-.458E-01	-.349E-03	2	10.5301	.2614	.2837	0	.0000
.0220	.111E+02	-.584E-01	-.446E-03	2	11.4583	.2614	.3108	0	.0000
.0240	.119E+02	-.722E-01	-.551E-03	2	12.3470	.2612	.3367	0	.0000
.0260	.128E+02	-.866E-01	-.661E-03	2	13.1913	.2611	.3614	0	.0000
.0280	.135E+02	-.101E+00	-.774E-03	2	13.9881	.2610	.3846	0	.0000
.0300	.143E+02	-.116E+00	-.884E-03	2	14.7322	.2609	.4064	0	.0000
.0320	.149E+02	-.130E+00	-.988E-03	2	15.4210	.2608	.4348	0	.0000
.0340	.155E+02	-.142E+00	-.108E-02	2	16.0493	.2607	.4626	0	.0000
.0360	.161E+02	-.151E+00	-.115E-02	2	16.6145	.2606	.4875	0	.0000
.0380	.166E+02	-.158E+00	-.121E-02	2	17.1140	.2606	.5096	0	.0000
.0400	.170E+02	-.161E+00	-.123E-02	2	17.5423	.2606	.5285	0	.0000
.0420	.173E+02	-.161E+00	-.123E-02	2	17.9004	.2606	.5444	0	.0000
.0440	.176E+02	-.159E+00	-.121E-02	2	18.1903	.2606	.5572	0	.0000
.0460	.178E+02	-.155E+00	-.118E-02	2	18.4118	.2606	.5671	0	.0000
.0480	.180E+02	-.147E+00	-.112E-02	2	18.5601	.2607	.5737	0	.0000
.0500	.180E+02	-.135E+00	-.103E-02	2	18.6328	.2608	.5770	0	.0000
.0520	.180E+02	-.119E+00	-.906E-03	2	18.6298	.2609	.5778	0	.0000
.0540	.179E+02	-.985E-01	-.751E-03	2	18.5519	.2610	.5778	0	.0000
.0560	.178E+02	-.743E-01	-.566E-03	2	18.4011	.2612	.5778	0	.0000
.0580	.176E+02	-.464E-01	-.354E-03	2	18.1816	.2614	.5778	0	.0000

#4

FORCE OUTPUT..UNITS KIPS, INCHES, GS

TIME	FORCE-1 DST TO CG	FORCE-2 DST TO CG	HOR FORCE	ACCEL VERTICAL	ACCEL HORIZONTAL	ROTATION
.0000	.00	.00	.00	.00	.00	.00000
	.000	.000				
.0020	282.31	.00	-47.02	-.55	-.26	-.00197
	-24.103	.000				
.0040	758.58	.00	-107.27	-3.17	-.59	-.00450
	-20.466	.000				
.0060	.00	.00	.00	.00	.00	.00000
	.000	.000				
.0080	1395.90	.00	-165.65	-6.67	-.91	-.00695
	-17.175	.000				
.0100	1395.90	.00	-165.68	-6.67	-.91	-.00695
	-17.178	.000				
.0120	2103.83	.00	-200.36	-10.56	-1.10	-.00840
	-13.783	.000				
.0140	2898.24	.00	-212.22	-14.92	-1.17	-.00890
	-10.597	.000				
.0160	2898.26	.00	-212.38	-14.92	-1.17	-.00890
	-10.605	.000				
.0180	3720.38	.00	-186.86	-19.44	-1.03	-.00783
	-7.269	.000				
.0200	4627.50	.00	-134.87	-24.43	-.74	-.00566
	-4.218	.000				
.0220	4638.59	.00	-135.80	-24.49	-.75	-.00569
	-4.237	.000				
.0240	5528.79	.00	-38.40	-29.38	-.21	-.00161
	-1.005	.000				
.0260	5558.15	.00	-41.93	-29.54	-.23	-.00176
	-1.092	.000				
.0280	6491.47	.00	87.18	-34.67	.48	.00366
	1.944	.000				
.0300	6509.04	.00	86.18	-34.76	.47	.00361
	1.916	.000				
.0320	7412.32	.00	260.03	-39.73	1.43	.01090
	5.076	.000				
.0340	7431.80	.00	258.34	-39.83	1.42	.01083
	5.030	.000				
.0360	7461.08	.00	254.69	-39.99	1.40	.01068
	4.939	.000				
.0380	8406.84	.00	457.62	-45.19	2.51	.01919
	7.877	.000				
.0400	8408.81	.00	457.76	-45.20	2.52	.01920
	7.877	.000				
.0420	8029.53	.00	247.80	-43.12	1.36	.01039
	4.465	.000				
.0440	8030.88	.00	246.04	-43.13	1.35	.01032
	4.433	.000				
.0460	8924.97	.00	490.41	-48.04	2.69	.02057
	7.951	.000				
.0480	8924.82	.00	490.78	-48.04	2.70	.02058
	7.957	.000				
.0500	8924.61	.00	491.35	-48.04	2.70	.02060
	7.967	.000				
.0520	8853.46	.00	486.42	-47.65	2.67	.02040
	7.950	.000				
.0540	8597.39	.00	467.74	-46.24	2.57	.01961
	7.873	.000				
.0560	8118.14	.00	433.03	-43.61	2.38	.01816
	7.719	.000				
.0580	7428.30	.00	383.07	-39.81	2.10	.01606
	7.463	.000				
.0600	6546.38	.00	320.54	-34.97	1.76	.01344
	7.086	.000				

#4

TIME	AXIAL ACCEL (G'S)	NORMAL ACCEL AT CENTER OF GRAV	TOP	BOTTOM
.0000	-.966E+00	.259E+00	.259E+00	.259E+00
.0020	.465E+00	-.392E+00	-.589E+00	-.196E+00
.0040	.466E+00	-.392E+00	-.589E+00	-.196E+00
.0060	.291E+01	-.139E+01	-.184E+01	-.941E+00
.0080	.621E+01	-.261E+01	-.330E+01	-.191E+01
.0100	.621E+01	-.261E+01	-.330E+01	-.191E+01
.0120	.992E+01	-.380E+01	-.463E+01	-.296E+01
.0140	.141E+02	-.499E+01	-.587E+01	-.410E+01
.0160	.141E+02	-.499E+01	-.587E+01	-.410E+01
.0180	.185E+02	-.602E+01	-.680E+01	-.524E+01
.0200	.234E+02	-.703E+01	-.759E+01	-.647E+01
.0220	.235E+02	-.705E+01	-.761E+01	-.648E+01
.0240	.283E+02	-.779E+01	-.795E+01	-.763E+01
.0260	.285E+02	-.785E+01	-.802E+01	-.767E+01
.0280	.336E+02	-.848E+01	-.812E+01	-.885E+01
.0300	.337E+02	-.851E+01	-.815E+01	-.887E+01
.0320	.388E+02	-.886E+01	-.778E+01	-.995E+01
.0340	.389E+02	-.890E+01	-.782E+01	-.998E+01
.0360	.390E+02	-.895E+01	-.789E+01	-.100E+02
.0380	.443E+02	-.921E+01	-.730E+01	-.111E+02
.0400	.443E+02	-.922E+01	-.730E+01	-.111E+02
.0420	.420E+02	-.979E+01	-.876E+01	-.108E+02
.0440	.420E+02	-.980E+01	-.878E+01	-.108E+02
.0460	.471E+02	-.977E+01	-.773E+01	-.118E+02
.0480	.471E+02	-.978E+01	-.773E+01	-.118E+02
.0500	.471E+02	-.978E+01	-.772E+01	-.118E+02
.0520	.467E+02	-.971E+01	-.768E+01	-.117E+02
.0540	.453E+02	-.945E+01	-.750E+01	-.114E+02
.0560	.427E+02	-.896E+01	-.715E+01	-.108E+02
.0580	.390E+02	-.826E+01	-.666E+01	-.986E+01
.0600	.342E+02	-.735E+01	-.601E+01	-.868E+01

MAXIMUM ACCELERATIONS

MAX AXIAL = 47.110 G'S
MAX TRANS CG = 9.805 G'S
MAX TRANS TOP = 8.777 G'S
MAX TRANS BOT = 11.829 G'S

#4

```
        ACCELERATIONS (G'S)
  A = AXIAL ACC
  G = TRANS ACC CG
  T = TRANS ACC TOP
  B = TRANS ACC BOT
-11.8      -3.4       5.0       13.4      21.9      30.3      38.7      47.1
  ---------------------------------------------------------------------------
  I          IA B      I         I         I         I         I         I
  I          I BA      I         I         I         I         I         I
  I          I BA      I         I         I         I         I         I
  I          TB    A   I         I         I         I         I         I
  I         TB         A         I         I         I         I         I
  I         TB         A         I         I         I         I         I
  I       TGBI         I   A     I         I         I         I         I
  I      TGB I         I        AI         I         I         I         I
  I      TGB I         I        AI         I         I         I         I
  I---TGB---I---------I---------I----A----I---------I---------I---------ITIME =    .0180
  I   TB    I         I         I         A         I         I         I
  I   TB    I         I         I         A         I         I         I
  I  B      I         I         I         I     A   I         I         I
  I  B      I         I         I         I     A   I         I         I
  I BT      I         I         I         I         I A       I         I
  I BT      I         I         I         I         I  A      I         I
  IBGT      I         I         I         I         I        AI         I
  IBGT      I         I         I         I         I        AI         I
  IBGT      I         I         I         I         I        AI         I
  B-G-T-----I---------I---------I---------I---------I---------I----A----ITIME =    .0380
  B G T     I         I         I         I         I         I    A    I
  BGT       I         I         I         I         I         I A       I
  BGT       I         I         I         I         I         I A       I
  BG T      I         I         I         I         I         I        AI
  BG T      I         I         I         I         I         I       A I
  BG T      I         I         I         I         I         I       A I
  BG T      I         I         I         I         I         I       A I
  BG  T     I         I         I         I         I         I     A   I
  B G T     I         I         I         I         I         I  A      I
  IB-G-T----I---------I---------I---------I---------I--------AI---------ITIME =    .0580
  I B GT    I         I         I         I         I  A      I         I
```

#4

DEFORMED SHAPE OF COVER 1

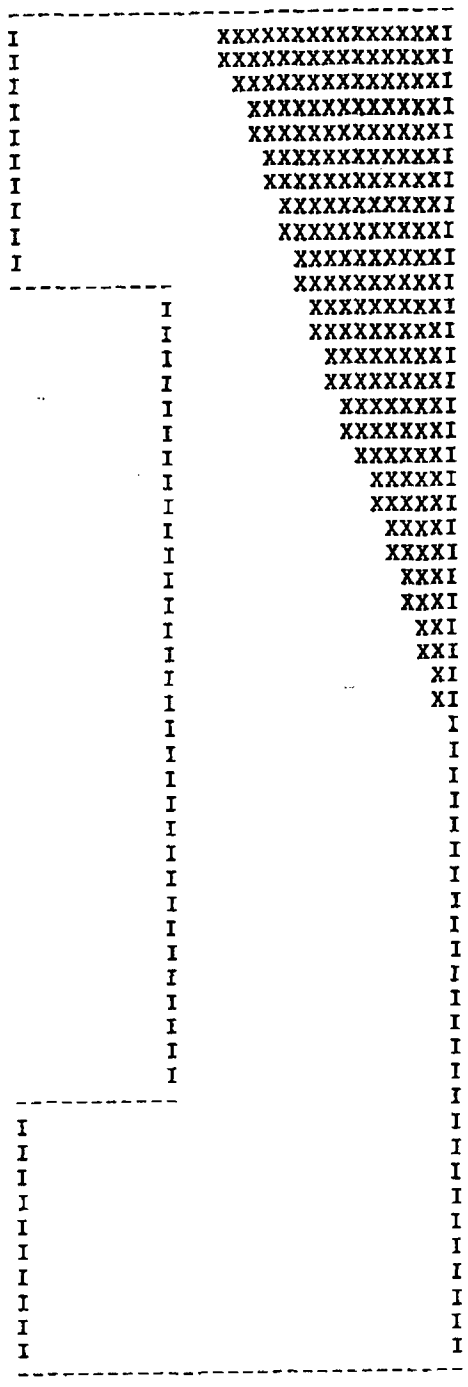

VERIFICATION PROBLEM NO. 5 - THIRD SCALE TEST 2 DATE:10-23-87

```
CASK LENGTH =     76.300  INCHES
LOCATION OF CG =       .500  *LENGTH
CASK WEIGHT =  8386.000  POUNDS
CASK ROTARY INERTIA =     .100E+04  POUND IN.SEC**2

HEIGHT OF DROP =   354.300  INCHES
ANGLE OF CASK CL WITH RESPECT TO HORIZ. =    77.000  DEG
IMPACT VELOCITY =     .523E+03  IN./SEC


MAX TIME =      .0300  SEC
TIME STEP =     .00200  SEC
PRINT EVERY      1  TIME STEPS
```

#5

```
     C O V E R   P R O P E R T I E S

OUTER RADIUS =     14.500 INCHES
INNER RADIUS =     10.770 INCHES
THICKNESS COVER 1 =      5.710 INCHES
THICKNESS COVER 2 =      5.710 INCHES
OUTER THICKNESS COVER 1 =      3.310 INCHES
OUTER THICKNESS COVER 2 =      3.310 INCHES
NUMBER OF SEGMENTS BOTTOM =    20
NUMBER OF SEGMENTS SIDE =    10


     MATERIAL   1  PROPERTIES
CRUSHING STRENGTH =  3200.000 PSI
YIELD STRAIN =    .00040
UNLOADING MODULUS =        .100E+05 PSI
STRAIN LIMIT OF CRUSHING =     .90000
LOCKING MODULUS =        .100E+05 PSI
HARDER MAT CRUSH STRENGTH =  3200.000 PSI
STRAIN FOR TRANSFER TO HARD MAT =     .00040

     MATERIAL   2  PROPERTIES
CRUSHING STRENGTH =  3200.000 PSI
YIELD STRAIN =    .00040
UNLOADING MODULUS =        .100E+05 PSI
STRAIN LIMIT OF CRUSHING =     .90000
LOCKING MODULUS =        .100E+05 PSI
HARDER MAT CRUSH STRENGTH =  3200.000 PSI
STRAIN FOR TRANSFER TO HARD MAT =     .00040

     MATERIAL   3  PROPERTIES
CRUSHING STRENGTH =  3200.000 PSI
YIELD STRAIN =    .00040
UNLOADING MODULUS =        .100E+05 PSI
STRAIN LIMIT OF CRUSHING =     .90000
LOCKING MODULUS =        .100E+05 PSI
HARDER MAT CRUSH STRENGTH =  3200.000 PSI
STRAIN FOR TRANSFER TO HARD MAT =     .00040

FRICTION COEFFICIENT =       .200


COUNT    1.000 TIMES NON BACKED UP FORCES
```

#5

TIME	DEFORMATIONS VERTICAL	HORIZONTAL	ROTATION	MODE	BOTTOM COVER DELTA	PHI	MAX STRAIN	MODE	TOP COVER DELTA
.0000	.000E+00	.000E+00	.000E+00	0	.0000	.0000	.0000	0	.0000
.0020	.104E+01	-.485E-03	-.111E-04	2	1.0679	.2269	.1497	0	.0000
.0040	.204E+01	-.254E-02	-.583E-04	2	2.0914	.2268	.3599	0	.0000
.0060	.293E+01	-.332E-02	-.760E-04	2	3.0070	.2268	.6226	0	.0000
.0080	.365E+01	.507E-02	.116E-03	2	3.7509	.2270	.8357	0	.0000
.0100	.417E+01	.299E-01	.684E-03	2	4.2791	.2276	.9863	0	.0000
.0120	.442E+01	.794E-01	.182E-02	2	4.5509	.2287	1.0624	0	.0000
.0140	.441E+01	.158E+00	.362E-02	2	4.5453	.2305	1.0809	0	.0000
.0160	.412E+01	.268E+00	.613E-02	2	4.2676	.2330	1.0809	0	.0000
.0180	.365E+01	.397E+00	.909E-02	2	3.8002	.2360	1.0809	0	.0000
.0200	.311E+01	.530E+00	.121E-01	2	3.2573	.2390	1.0809	0	.0000
.0220	.256E+01	.664E+00	.152E-01	2	2.7019	.2421	1.0809	0	.0000
.0240	.200E+01	.797E+00	.183E-01	2	2.1457	.2451	1.0809	0	.0000
.0260	.145E+01	.930E+00	.213E-01	2	1.5898	.2482	1.0809	0	.0000
.0280	.898E+00	.106E+01	.244E-01	2	1.0342	.2512	1.0809	0	.0000

#5

FORCE OUTPUT..UNITS KIPS, INCHES, GS

TIME	FORCE-1 DST TO CG	FORCE-2 DST TO CG	HOR FORCE	ACCEL VERTICAL	ACCEL HORIZONTAL	ROTATION
.0000	.00	.00	.00	.00	.00	.00000
	.000	.000				
.0020	200.36	.00	-10.70	-22.89	-1.28	-.02921
	-2.387	.000				
.0040	930.11	.00	49.01	-109.91	5.84	.13386
	2.356	.000				
.0060	.00	.00	.00	.00	.00	.00000
	.000	.000				
.0080	1164.21	.00	82.56	-137.83	9.84	.22549
	3.171	.000				
.0100	1443.97	.00	147.39	-171.19	17.58	.40253
	4.564	.000				
.0120	1484.65	.00	147.88	-176.04	17.63	.40383
	4.455	.000				
.0140	1498.90	.00	173.56	-177.74	20.70	.47385
	5.179	.000				
.0160	1006.96	.00	96.86	-119.08	11.55	.26438
	4.304	.000				
.0180	369.89	.00	17.08	-43.11	2.04	.04661
	2.067	.000				
.0200	59.08	.00	-2.44	-6.05	-.29	-.00667
	-1.852	.000				
.0220	.00	.00	.00	1.00	.00	.00000
	.000	.000				
.0240	.00	.00	.00	1.00	.00	.00000
	.000	.000				
.0260	.00	.00	.00	1.00	.00	.00000
	.000	.000				
.0280	.00	.00	.00	1.00	.00	.00000
	.000	.000				
.0300	.00	.00	.00	1.00	.00	.00000
	.000	.000				

#5

TIME	AXIAL ACCEL (G'S)	NORMAL ACCEL AT CENTER OF GRAV	TOP	BOTTOM
.0000	-.974E+00	.225E+00	.225E+00	.225E+00
.0020	.220E+02	-.639E+01	-.751E+01	-.528E+01
.0040	.617E+02	-.142E+02	-.142E+02	-.142E+02
.0060	.108E+03	-.190E+02	-.139E+02	-.241E+02
.0080	.137E+03	-.214E+02	-.128E+02	-.300E+02
.0100	.171E+03	-.215E+02	-.614E+01	-.369E+02
.0120	.175E+03	-.227E+02	-.733E+01	-.381E+02
.0140	.178E+03	-.205E+02	-.238E+01	-.385E+02
.0160	.119E+03	-.163E+02	-.617E+01	-.263E+02
.0180	.424E+02	-.810E+01	-.632E+01	-.988E+01
.0200	.580E+01	-.171E+01	-.197E+01	-.146E+01
.0220	-.971E+00	.240E+00	.240E+00	.240E+00
.0240	-.970E+00	.243E+00	.243E+00	.243E+00
.0260	-.969E+00	.246E+00	.246E+00	.246E+00
.0280	-.969E+00	.249E+00	.249E+00	.249E+00
.0300	-.968E+00	.252E+00	.252E+00	.252E+00

MAXIMUM ACCELERATIONS

MAX AXIAL = 177.766 G'S
MAX TRANS CG = 22.736 G'S
MAX TRANS TOP = 14.189 G'S
MAX TRANS BOT = 38.537 G'S

#5

```
        ACCELERATIONS (G'S)
  A = AXIAL ACC
  G = TRANS ACC CG
  T = TRANS ACC TOP
  B = TRANS ACC BOT
-38.5      -7.6      23.3      54.2      85.1      116.0     146.9     177.8
  ----------------------------------------------------------------------------
  I         IB        I         I         I         I         I         I
  I        BI       A I         I         I         I         I         I
  I     B   I         I         IA        I         I         I         I
  I  B GT   I         I         I         I     A   I         I         I
  IB  G  T  I         I         I         I         I    A    I         I
  B   G    TI         I         I         I         I         I     A   I
  B   G    TI         I         I         I         I         I       A I
  B   G     T         I         I         I         I         I        AI
  I B   G  TI         I         I         I        AI         I         I
  I-------BTI---------I----A----I---------I---------I---------I---------ITIME =    .0180
  I         B  A      I         I         I         I         I         I
  I         IB        I         I         I         I         I         I
  I         IB        I         I         I         I         I         I
  I         IB        I         I         I         I         I         I
  I         IB        I         I         I         I         I         I
  I         IB        I         I         I         I         I         I
```

#5

DEFORMED SHAPE OF COVER 1

```
----------------------
I     XXXXXXXXXXXXXXXI
I     XXXXXXXXXXXXXXXI
I      XXXXXXXXXXXXXXI
I      XXXXXXXXXXXXXXI
I      XXXXXXXXXXXXXXI
---------XXXXXXXXXXXXI
         IXXXXXXXXXXXXI
         IXXXXXXXXXXXXI
         IXXXXXXXXXXXXI
         I XXXXXXXXXXXI
         I XXXXXXXXXXXI
         I  XXXXXXXXXXI
         I  XXXXXXXXXXI
         I   XXXXXXXXXI
         I   XXXXXXXXXI
         I    XXXXXXXXI
         I    XXXXXXXXI
         I     XXXXXXXI
         I     XXXXXXXI
         I     XXXXXXXI
         I      XXXXXXI
         I      XXXXXXI
         I       XXXXXI
         I       XXXXXI
         I        XXXXI
         I        XXXXI
         I         XXXI
         I         XXXI
         I          XXI
         I          XXI
         I           XI
         I           XI
         I           XI
         I            I
         I            I
         I            I
         I            I
         I            I
         I            I
         I            I
         I            I
         I            I
         I            I
         I            I
         I            I
         I            I
         I            I
         I            I
         I            I
         I            I
---------             I
I                     I
I                     I
I                     I
I                     I
I                     I
----------------------
```

VERIFICATION PROBLEM NO. 6 - THIRD SCALE TEST 5 DATE:10-23-87

```
CASK LENGTH =     76.300  INCHES
LOCATION OF CG =       .500  *LENGTH
CASK WEIGHT =  8386.000  POUNDS
CASK ROTARY INERTIA =     .100E+04  POUND IN.SEC**2

HEIGHT OF DROP =   354.300  INCHES
ANGLE OF CASK CL WITH RESPECT TO HORIZ. =    90.000  DEG
IMPACT VELOCITY =     .523E+03  IN./SEC


MAX TIME =     .0300  SEC
TIME STEP =    .00200  SEC
PRINT EVERY     1  TIME STEPS
```

#6

```
C O V E R   P R O P E R T I E S

OUTER RADIUS =     14.500 INCHES
INNER RADIUS =     10.770 INCHES
THICKNESS COVER 1 =      5.710 INCHES
THICKNESS COVER 2 =      5.710 INCHES
OUTER THICKNESS COVER 1 =      3.310 INCHES
OUTER THICKNESS COVER 2 =      3.310 INCHES
NUMBER OF SEGMENTS BOTTOM =    20
NUMBER OF SEGMENTS SIDE =   10


     MATERIAL   1  PROPERTIES
CRUSHING STRENGTH =  3200.000 PSI
YIELD STRAIN =     .00040
UNLOADING MODULUS =        .100E+05 PSI
STRAIN LIMIT OF CRUSHING =     .90000
LOCKING MODULUS =        .100E+05 PSI
HARDER MAT CRUSH STRENGTH =  3200.000 PSI
STRAIN FOR TRANSFER TO HARD MAT =     .00040

     MATERIAL   2  PROPERTIES
CRUSHING STRENGTH =  3200.000 PSI
YIELD STRAIN =     .00040
UNLOADING MODULUS =        .100E+05 PSI
STRAIN LIMIT OF CRUSHING =     .90000
LOCKING MODULUS =        .100E+05 PSI
HARDER MAT CRUSH STRENGTH =  3200.000 PSI
STRAIN FOR TRANSFER TO HARD MAT =     .00040

     MATERIAL   3  PROPERTIES
CRUSHING STRENGTH =  3200.000 PSI
YIELD STRAIN =     .00040
UNLOADING MODULUS =        .100E+05 PSI
STRAIN LIMIT OF CRUSHING =     .90000
LOCKING MODULUS =        .100E+05 PSI
HARDER MAT CRUSH STRENGTH =  3200.000 PSI
STRAIN FOR TRANSFER TO HARD MAT =     .00040

FRICTION COEFFICIENT =       .200


COUNT    1.000 TIMES NON BACKED UP FORCES
```

#6

TIME	DEFORMATIONS VERTICAL	HORIZONTAL	ROTATION	MODE	BOTTOM COVER DELTA	PHI	MAX STRAIN	MODE	TOP COVER DELTA
.0000	.000E+00	.000E+00	.000E+00	0	.0000	.0000	.0000	0	.0000
.0020	.917E+00	-.459E-06	-.111E-07	1	.9170	.0003	.2770	0	.0000
.0040	.145E+01	-.228E-05	-.550E-07	1	1.4506	.0000	.4383	0	.0000
.0060	.161E+01	-.545E-05	-.132E-06	1	1.6069	.0000	.4904	0	.0000
.0080	.139E+01	-.999E-05	-.241E-06	1	1.3919	.0000	.4904	0	.0000
.0100	.883E+00	-.156E-04	-.377E-06	1	.8829	.0003	.4904	0	.0000
.0120	.262E+00	-.482E-04	-.116E-05	1	.2615	.0000	.4904	0	.0000
.0140	-.359E+00	-.808E-04	-.195E-05	0	.2615	.0000	.4904	0	.0000
.0160	-.979E+00	-.113E-03	-.273E-05	0	.2615	.0000	.4904	0	.0000
.0180	-.160E+01	-.146E-03	-.352E-05	0	.2615	.0000	.4904	0	.0000
.0200	-.221E+01	-.178E-03	-.430E-05	0	.2615	.0000	.4904	0	.0000
.0220	-.283E+01	-.211E-03	-.509E-05	0	.2615	.0000	.4904	0	.0000
.0240	-.344E+01	-.244E-03	-.587E-05	0	.2615	.0000	.4904	0	.0000
.0260	-.405E+01	-.276E-03	-.666E-05	0	.2615	.0000	.4904	0	.0000
.0280	-.466E+01	-.309E-03	-.745E-05	0	.2615	.0000	.4904	0	.0000

#6

FORCE OUTPUT..UNITS KIPS, INCHES, GS

TIME	FORCE-1 DST TO CG	FORCE-2 DST TO CG	HOR FORCE	ACCEL VERTICAL	ACCEL HORIZONTAL	ACCEL ROTATION
.0000	.00	.00	.00	.00	.00	.00000
	.000	.000				
.0020	2120.94	.00	-.00	-251.91	.00	-.00002
	-.000	.000				
.0040	2088.45	.00	-.00	-248.04	.00	-.00002
	-.000	.000				
.0060	.00	.00	.00	.00	.00	.00000
	.000	.000				
.0080	1658.00	.00	-.00	-196.71	.00	-.00002
	-.000	.000				
.0100	628.83	.00	-.86	-73.99	-.10	-.00249
	-.059	.000				
.0120	.00	.00	.00	1.00	.00	.00000
	.000	.000				
.0140	.00	.00	.00	1.00	.00	.00000
	.000	.000				
.0160	.00	.00	.00	1.00	.00	.00000
	.000	.000				
.0180	.00	.00	.00	1.00	.00	.00000
	.000	.000				
.0200	.00	.00	.00	1.00	.00	.00000
	.000	.000				
.0220	.00	.00	.00	1.00	.00	.00000
	.000	.000				
.0240	.00	.00	.00	1.00	.00	.00000
	.000	.000				
.0260	.00	.00	.00	1.00	.00	.00000
	.000	.000				
.0280	.00	.00	.00	1.00	.00	.00000
	.000	.000				
.0300	.00	.00	.00	1.00	.00	.00000
	.000	.000				

#6

TIME	AXIAL ACCEL (G'S)	NORMAL ACCEL AT CENTER OF GRAV	TOP	BOTTOM
.0000	-.100E+01	-.362E-05	-.362E-05	-.362E-05
.0020	.252E+03	.183E-04	-.804E-03	.841E-03
.0040	.252E+03	.622E-05	-.827E-03	.840E-03
.0060	.248E+03	.155E-04	-.824E-03	.855E-03
.0080	.197E+03	.166E-04	-.667E-03	.700E-03
.0100	.740E+02	-.103E+00	-.198E+00	-.793E-02
.0120	-.100E+01	-.481E-05	-.481E-05	-.481E-05
.0140	-.100E+01	-.553E-05	-.553E-05	-.553E-05
.0160	-.100E+01	-.636E-05	-.636E-05	-.636E-05
.0180	-.100E+01	-.720E-05	-.720E-05	-.720E-05
.0200	-.100E+01	-.791E-05	-.791E-05	-.791E-05
.0220	-.100E+01	-.875E-05	-.875E-05	-.875E-05
.0240	-.100E+01	-.946E-05	-.946E-05	-.946E-05
.0260	-.100E+01	-.103E-04	-.103E-04	-.103E-04
.0280	-.100E+01	-.110E-04	-.110E-04	-.110E-04
.0300	-.100E+01	-.118E-04	-.118E-04	-.118E-04

MAXIMUM ACCELERATIONS

MAX AXIAL = 251.915 G'S
MAX TRANS CG = .103 G'S
MAX TRANS TOP = .198 G'S
MAX TRANS BOT = .008 G'S

#6

```
      ACCELERATIONS (G'S)
A = AXIAL ACC
G = TRANS ACC CG
T = TRANS ACC TOP
B = TRANS ACC BOT
-1.0      35.1      71.3      107.4     143.5     179.7     215.8     251.9
-----------------------------------------------------------------------------
B         I         I         I         I         I         I         I
B         I         I         I         I         I         I        AI
B         I         I         I         I         I         I        AI
B         I         I         I         I         I         I      A  I
B         I         I         I         I         I  A      I         I
B         I        AI         I         I         I         I         I
B         I         I         I         I         I         I         I
B         I         I         I         I         I         I         I
B         I         I         I         I         I         I         I
B---------I---------I---------I---------I---------I---------I---------ITIME =    .0180
B         I         I         I         I         I         I         I
B         I         I         I         I         I         I         I
B         I         I         I         I         I         I         I
B         I         I         I         I         I         I         I
B         I         I         I         I         I         I         I
B         I         I         I         I         I         I         I
```

#6

DEFORMED SHAPE OF COVER 1

```
----------------------
I                 XXXXI
I                 XXXXI
I                 XXXXI
I                 XXXXI
I                 XXXXI
---------         XXXXI
        I         XXXXI
        I         XXXXI
        I         XXXXI
        I         XXXXI
        I         XXXXI
        I         XXXXI
        I         XXXXI
        I         XXXXI
        I         XXXXI
        I         XXXXI
        I         XXXXI
        I         XXXXI
        I         XXXXI
        I         XXXXI
        I         XXXXI
        I         XXXXI
        I         XXXXI
        I         XXXXI
        I         XXXXI
        I         XXXXI
        I         XXXXI
        I         XXXXI
        I         XXXXI
        I         XXXXI
        I         XXXXI
        I         XXXXI
        I         XXXXI
        I         XXXXI
        I         XXXXI
        I         XXXXI
        I         XXXXI
        I         XXXXI
        I         XXXXI
        I         XXXXI
        I         XXXXI
        I         XXXXI
        I         XXXXI
        I         XXXXI
        I         XXXXI
        I         XXXXI
        I         XXXXI
---------         XXXXI
I                 XXXXI
I                 XXXXI
I                 XXXXI
I                 XXXXI
I                 XXXXI
----------------------
```