Offshore Power Systems

AN EVALUATION OF THE RESIDUAL RISK

FROM THE INDIAN POINT NUCLEAR POWER PLANTS

REPORT NO. 35A96

MAY 1980

REGULATORY DOCKET FILE COPY

Docket # 50-247
Control # 8005280527
Date 5/23/80 of Document:
REGULATORY DOCKET FILE

8005280 539

AN EVALUATION OF

THE RESIDUAL RISK FROM THE

INDIAN POINT NUCLEAR

POWER PLANTS

PREPARED FOR

WESTINGHOUSE ELECTRIC CORPORATION

NUCLEAR ENERGY SYSTEMS

BY

OFFSHORE POWER SYSTEMS

P. O. BOX 8000

JACKSONVILLE, FLORIDA

REPORT NO. 35A96

MAY 1980

CONTENTS

Section		Page
1.0	Introduction	1
2.0	Accident Sequence Probabilities	
2.1	Indian Point-2	5
2.2	Indian Point-3	35
3.0	Consequence Evaluations and Risk Estimates	66
3.1	Containment Failure Mode Probabilities	67
3.2	Assignment of Accident Sequence Containment Failure Mode Combinations	69
3.3	Consequence Calculation	71
3.4	Risk Estimates	72
4.0	Conclusions	73

Appendix A: Component Failure Data and Sources

Appendix B: Symbology

Appendix C: Variations in Key Probabilistic Assumptions from those used in WASH-1400

1.0 INTRODUCTION

The objective of this study was to establish, within a short period of time, a reasonable estimate of the residual risk associated with the Indian Point Nuclear Station, Units 2 and 3. In order to reduce the time required and in order to help preserve a frame of reference for comparative purposes, this study was based to the extent possible on the Reactor Safety Study, WASH-1400[1].

To calculate residual risk one first identifies accidents beyond the regulatory design basis and establishes their probabilities. Knowing the characteristics of the accident, one proceeds to determine accident consequences. Finally probability and consequence are combined to arrive at risk.

The starting point for the present work was the table of dominant PWR accident sequences from WASH-1400[2], the initial assumption being that the accident sequences which dominated risk in WASH-1400 would likewise dominate risk for Indian Point. During examination of the Indian Point plant systems, cause was found to both add to and delete from this set of accident sequences. Because of shared equipment, it was found that failure of containment spray recirculation could result directly from a loss of emergency coolant recirculation to the core. Sequences involving coincident loss of containment spray recirculation and core recirculation were not dominant in WASH-1400 because these systems, and hence their failures, were independent.

---

(1) "Reactor Safety Study, An Assessment of Accident Risk in U.S. Commercial Nuclear Power Plants," WASH-1400 (NUREG-75/014), USNRC, October 1975.

(2) Appendix V, Table V 3-14.

In WASH-1400 a major contributor to risk is a sequence which proceeds from loss of containment spray injection following a small pipe break. In this sequence, containment failure occurs (from steam overpressure) before sufficient water collects in the containment sump to support containment spray recirculation. The capability to recirculate cooled sump water to the core is lost and core melt results. The Indian Point plants have fan coolers which are redundant to containment spray injection and whose failure is independent of the spray injection system. Thus the result obtained in WASH-1400 required an additional independent failure and the sequence was deleted from the dominant list.

In the aftermath of Three Mile Island, it is widely believed that for at least some sequences core melt requires failures beyond those considered sufficient in WASH-1400. One example is the loss of auxiliary feedwater (heat sink) following shutdown for which more recent studies indicate that emergency coolant injection systems can provide the cooling necessary to avoid core melt. For this reason sequences were deleted which involve loss of secondary side heat sink, i.e., steam generator feedwater, except for the special case where there coexists a complete loss of AC power.

Finally, the two accident sequences involving transients followed by failure of the Reactor Trip System were deleted. These transients have been analyzed by Westinghouse, the NSSS vendor, and found not to result in core melt.

Having arrived at a set of accident sequences, each individual sequence probability was calculated by combining the probability of the initiating event with the probability that the required safety systems fail upon demand.

Except for the probability of interfacing check valve failure, initiating event probabilities were adopted without change from WASH-1400. Check valve failure probability was calculated for each

plant using the same model as WASH-1400 but taking into account plant-specific differences.

The probability of safety systems failure is calculated in the form of point estimates based on component failure rates which are generally obtained from data in WASH-1400, as noted in Appendix A. Systems unavailability calculations are presented in Sections 2.1.3 (Indian Point-2) and 2.2.3 (Indian Point-3). Assumptions which are at variance with WASH-1400 are summarized and discussed in Appendix C.

The second phase of this study deals with the calculation of accident consequences and the transition from accident probability to risk. Again, the methodology is basically that of WASH-1400.

The conditional probability that a particular containment failure mode will occur (given that a specific accident sequence occurs) was estimated from several sources. With WASH-1400 as a starting point, failure mode probabilities were adjusted on the basis of more recent steam explosion studies and on the basis of containment pressure calculations which take significant hydrogen burning into account as well as non-condensible gas generation. Containment failure mode probabilities are discussed in section 3.1. The combination of accident sequence leading to core melt and containment failure mode defines an overall scenario which enables one to define a source term for consequence calculations.

For each accident sequence leading to core melt, there are a number of ways in which containment failure might potentially occur, each with its own probability of occurrence. For each combination of accident sequence and containment failure mode there exists a unique source term upon which to base radiological consequence calculations. In WASH-1400, the spectrum of source terms was divided into seven discrete categories. These same fission product release categories are used in this study.

Accident scenarios were assigned to a release category on the basis of (1) the amount of radioactivity released to containment, (2) fission product removal from the containment atmosphere and (3) the magnitude of the release following containment failure. Placement of the dominant accident sequences in the appropriate release category which is discussed in Section 3.2, leads to the determination of the total probability of occurrence for each release category.

The computer code CRAC was used to calculate long term radiological consequences for the releases corresponding to each of the seven release categories. The basic release category definitions established in WASH-1400 were retained, including fission product inventories. CRAC calculations also used the actual population distribution and meterological data for the plant site. Within each release category, the probability of occurrence was multiplied by consequence to arrive at risk. Consequence and risk calculations are discussed in sections 3.3 and 3.4, respectively.

2.1 ACCIDENT SEQUENCE PROBABILITIES - INDIAN POINT UNIT 2

2.1.1 INITIATING EVENTS AND SUCCESS CRITERIA

The following subsections define each of the initiating events and the minimum safeguards equipment required to protect the core; i.e., the success criteria. These success criteria are applied in Section 2.1.3 in calculating the probability that the required safeguards equipment fails upon demand.

2.1.1.1 Event A: RCS Pipe Break Greater Than 6 Inch Diameter

Sequence AD

In this sequence core melt occurs because Emergency Coolant Injection (ECI) fails to operate as designed. Successful ECI requires that the accumulator in each intact loop operate and that flow be provided from at least one of the RHR pumps. Thus it is necessary for the Accumulator System and the Low Pressure Injection System (LPIS) to operate successfully. Failure of either system constitutes ECI failure (Event D).

Sequence AH

In this sequence core melt occurs because Emergency Coolant Recirculation (ECR) fails to operate properly. Successful ECR requires flow from at least one of the recirculation pumps or from at least one of the RHR pumps, each of which takes suction on the containment sump. Successful recirculation also requires that the operator make no incorrectable error during the shiftover from coolant injection to coolant recirculation. In many cases of operator error, equipment damage would not result and adequate time would be available for corrective action.

Collectively, the recirculation and RHR Subsystems constitute the Low Pressure Recirculation System (LPRS). Failure of ECR is designated as Event H.

Sequence AHF

The LPRS provides containment spray recirculation flow to the spray headers in addition to core recirculation. For this reason certain LPRS failures will also result in the loss of containment spray recirculation (Event F). Note that the installed containment fan coolers are redundant to spray recirculation, insofar as containment pressure suppression is concerned; however, the fan coolers are not as effective as spray for fission product removal from the containment atmosphere.

2.1.1.2 Event S_1: RCS Pipe Break of 2 inch to 6 inch Diameter

Sequence S_1D

In this sequence core melt occurs because ECI fails to operate properly. The systems required for successful accident response are the Accumulator System and the High Pressure Injection System (HPIS). That is, successful ECI requires that flow be provided from the accumulator in each intact loop and from at least two of the three safety injection pumps.

Sequence S_1H

In this sequence core melt occurs because ECR fails to operate properly. Successful ECR requires operation of the High Pressure Recirculation System (HPRS). The HPRS combines the LPRS and the HPIS into a single system. The LPRS provides suction head for the HPIS pumps as well as heat rejection. The HPIS pumps provide the necessary head to

discharge against RCS pressure. It is required that flow be provided from at least one of the four LPRS pumps (2 RHR Pumps and 2 Recirculation Pumps) and from any two of the three safety injection pumps. As noted under Event A (Section 2.1.1.1), successful recirculation requires correct operator action to affect the switchover from injection to recirculation.

Sequence S_1HF

As noted under Event A (Section 2.1.1.1), certain failures of the LPRS (which is a part of the HPRS) result in the coincident loss of containment spray recirculation (Event F).

2.1.1.3 Event S_2: RCS Pipe Break of 1/2 inch to 2 inch Diameter

Sequence S_2D

The success criteria for ECI are the same as for Event S_1 (Section 2.1.1.2), except that the loop accumulators are not required to function.

Sequence S_2H

The success criteria for ECR are the same as for Event S_1 (Section 2.1.1.2).

Sequence S_2HF

The remarks under Event S_1 (Section 2.1.1.2) apply also to Event S_2.

2.1.1.4 Event V: Interfacing Check Valve Failure

Event V, which is defined strictly as a LOCA through interfacing low pressure piping and with blowdown outside containment, is assumed to be sufficient in itself to result in core meltdown. This assumption is consonant with WASH-1400 but very conservatively neglects the possibility of terminating blowdown by successful closure of the motor-operated valve at the boundary between 2500 psi and 600 psi piping. Successful valve operation would terminate blowdown outside containment and would greatly improve the prospect for long-term core cooling. At Indian Point Unit 2 there is a normally closed motor operated valve, in addition to two check valves, which isolates 600 psi piping from 2500 psi piping in each interfacing line.

2.1.1.5 Event T: Transient Loss of Offsite Power

Event T was found to result in a core melt accident sequence only for the transient loss of offsite power which is followed by a complete loss of AC power in the plant. Successful response requires that a heat sink be provided by the turbine-driven portion of the Auxiliary Feedwater System. Failure of this system is designated Event L. Loss of onsite AC power is designated Event B and the sustained loss of offsite AC power following the initial transient is designated Event M. Sequence TMLB is, therefore, a total loss of AC power compounded by turbine AFWS failure for a period of time sufficient to result in core melt. If, following the onset of core meltdown, some source of AC power is restored, there will be at least some capability for containment pressure suppression and fission product removal from the atmosphere. Recovery of some AC power source is designated Event B" and non-recovery is designated Event B'.

2.1.2 ACCIDENT SEQUENCE SUMMARY

The estimated probability for each of the dominant accident sequences is tabulated below. For each sequence, the probability is broken down into its major constituents, i.e., initiating event probability, mitigating system unavailability, operator error, etc. The calculation of system unavailability is detailed in Section 2.1.3. Initiating event probabilities are taken from WASH-1400, except where otherwise noted. A glossary of abbreviations is contained in Appendix B for the benefit of those not familiar with the terminology used in WASH-1400.

Sequence AD

p (LPIS)	5.2×10^{-3}
p (Accumulators)	1.2×10^{-3}
p (D)	6.4×10^{-3}
p (A)	1×10^{-4}
p (AD)	6.4×10^{-7}

Sequence AH

p (LPRS, No Loss of CSRS) = p(H)	1.1×10^{-3}
p (A)	1×10^{-4}
p (AH)	1.1×10^{-7}

Sequence AHF

p (LPRS, CSRS Also failed)	6.5×10^{-5}
p (Operator error during Injection-Recirc. Shift)	3×10^{-3}
p (HF)	3×10^{-3}
p (A)	1×10^{-4}
p (AHF)	3×10^{-7}

<u>Sequence S_1D</u>		
p (HPIS)	4.7×10^{-3}	
p (Accumulators)	1.2×10^{-3}	
p (D)	5.9×10^{-3}	
p (S_1)	3×10^{-4}	
p (S_1D)	1.8×10^{-6}	
<u>Sequence S_1H</u>		
p (HPRS, No Loss of CSRS) = p (H)	4×10^{-3}	
p (S_1)	3×10^{-4}	
p (S_1H)	1.2×10^{-6}	
<u>Sequence S_1HF</u>		
p (HPRS, CSRS Also failed)	6.5×10^{-5}	
p (Operator error during Injection-Recirc. Shift)	3×10^{-4}	(Note 1)
p (HF)	3.7×10^{-4}	
p (S_1)	3×10^{-4}	
p (S_1HF)	1.1×10^{-7}	
<u>Sequence S_2D</u>		
p (HPIS) = p (D)	4.7×10^{-3}	
p (S_2)	1×10^{-3}	
p (S_2D)	4.7×10^{-6}	
<u>Sequence S_2H</u>		
p (HPRS, no loss of CSRS) = p (H)	4×10^{-3}	
p (S_2)	1×10^{-3}	
p (S_2H)	4×10^{-6}	

NOTE 1: Reduced by a factor of 10 from the probability stated in WASH-1400 to account for the shift technical advisor. Credit was not taken in Sequence AHF because of the reduced reaction time available.

Sequence S_2HF		
p (HPRS, CSRS also failed)	6.5×10^{-5}	
p (Operator error during Injection-recirc. shift)	3×10^{-4}	(Note 1, previous page)
p (HF)	3.7×10^{-4}	
p (S_2)	1×10^{-3}	
p (S_2HF)	3.7×10^{-7}	
Sequence V		
p (V)	2.8×10^{-10}	
Sequence TMLBB'		
p (T), transient loss of offsite AC power	0.2	
p (M), loss of offsite AC power to about 1 hour	0.2	
p (B), loss of onsite AC power	2.5×10^{-5}	
p (L), loss of turbine-AFW	1.6×10^{-2}	
p (B'), Non-recovery of any AC power to about 3 hours	0.5	
p (TMLBB')	8×10^{-9}	
Sequence TMLB"		
p (T)	0.2	
p (M)	0.2	
p (B)	2.5×10^{-5}	
p (L)	1.6×10^{-2}	
p (B"), Successful recovery of some AC power within 3 hours)		
p (B") = 1-p (B')	0.5	
p (TMLBB")	8×10^{-9}	

2.1.3 SYSTEM UNAVAILABILITY ESTIMATES

This section provides point estimates of the probability that systems required to respond to initiating events will fail upon demand. The subsection for each system generally consists of (1) brief description of significant differences from the system configuration which was the basis for WASH-1400, (2) a simplified flow diagram (where significant differences from WASH-1400 exist) and (3), the calculation of system failure probability (or unavailability). Component failure data and the sources of these data are presented in Appendix A to this report. A glossary of symbols is presented in Appendix B.

2.1.3.1 Accumulator System (ACCS)

The accumulator system is similar to that in WASH-1400, except tha there are four loops instead of only 3 loops. The WASH-1400 unavailability must therefore be converted from 1 out of 2 to 1 out of 3 (the accumulator in the failed loop is assumed to be lost).

$p(1/2\ ACC) = 8.3 \times 10^{-4}$ (WASH-1400, Table II 1-2)

$p(1/1) = 1/2\ p\ (1/2) = 4.15 \times 10^{-4}$

$p(1/3) = 3\ p\ (1/1) = 1.2 \times 10^{-3}$

$p(ACCS) = p\ (1/3) = \underline{1.2 \times 10^{-3}}$

Note: p(1/3) is read, "the probability that one out of three fails.", And so on for other similar notation.

2.1.3.2 Low Pressure Injection System (LPIS)

The LPIS is similar to that in WASH-1400 except that each of that two headers discharging to the RCS contains a normally closed motor-operated valve. Both of these valves, which receive an opening "S" signal, must fail to open in order to defeat the LPIS function. Therefore, the LPIS unavailability is estimated as the unavailability from WASH-1400 plus an additional increment to account for failure of both discharge header valves to open.

$$p\ (2/2\ \text{MOV}) = (3.2 \times 10^{-2})^2 = 1 \times 10^{-3}$$
$$p\ (\text{LPIS from WASH-1400}) = \underline{4.2 \times 10^{-3}}$$
$$p\ (\text{LPIS}) \quad 5.2 \times 10^{-3}$$

2.1.3.3 High Pressure Injection System (HPIS)

The HPIS is similar to that in WASH-1400 in that each system uses three 50% capacity pumps. There are, however, differences in piping configuration. For example, the Indian Point 2 HPIS has two discharge headers and the Boron Injection Tank is connected to the HPIS pump suctions with nitrogen overpressure to assure flow from the tank. The system flow diagram and calculation of unavailability follow.

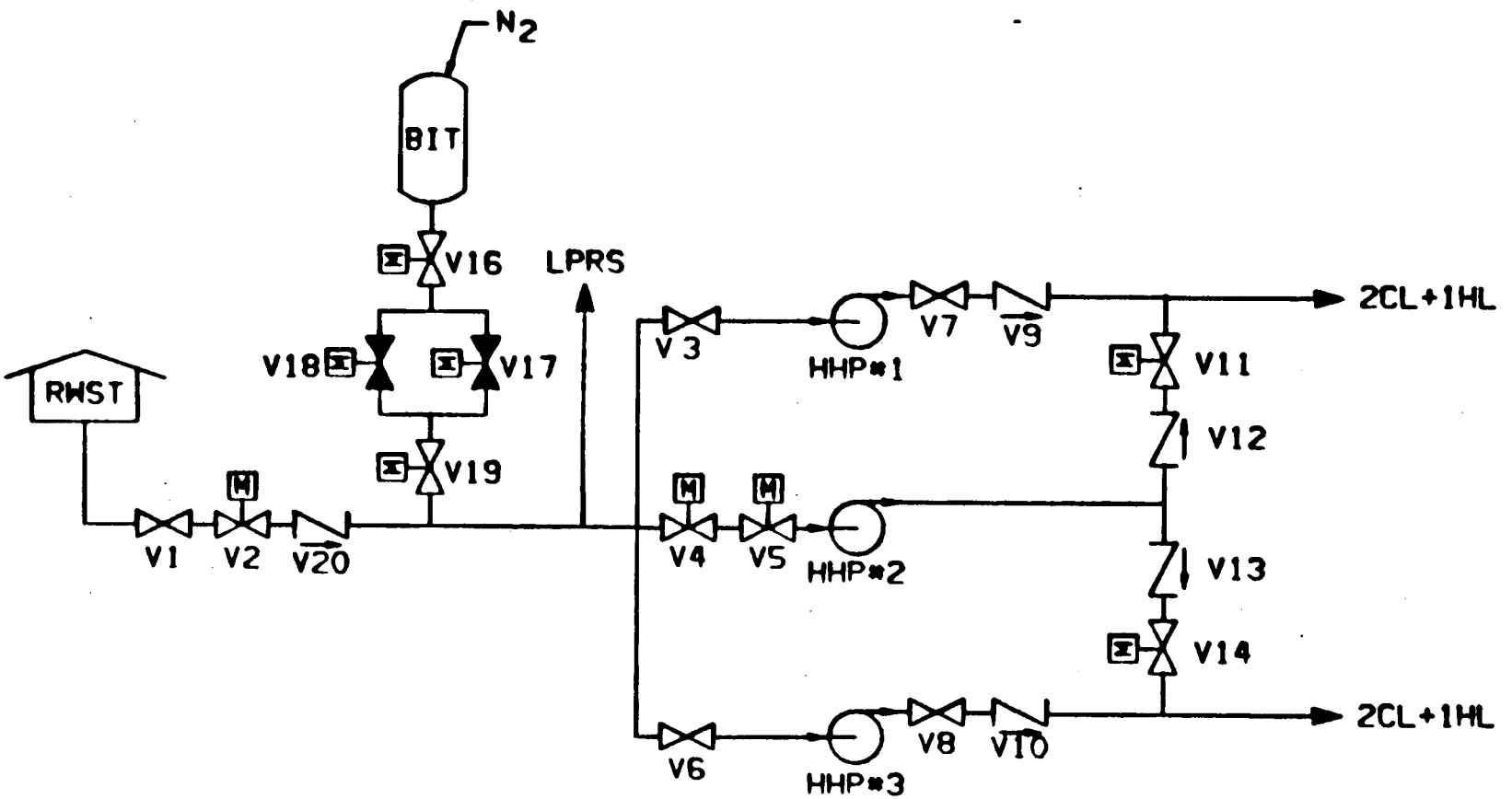

HPIS FLOW DIAGRAM

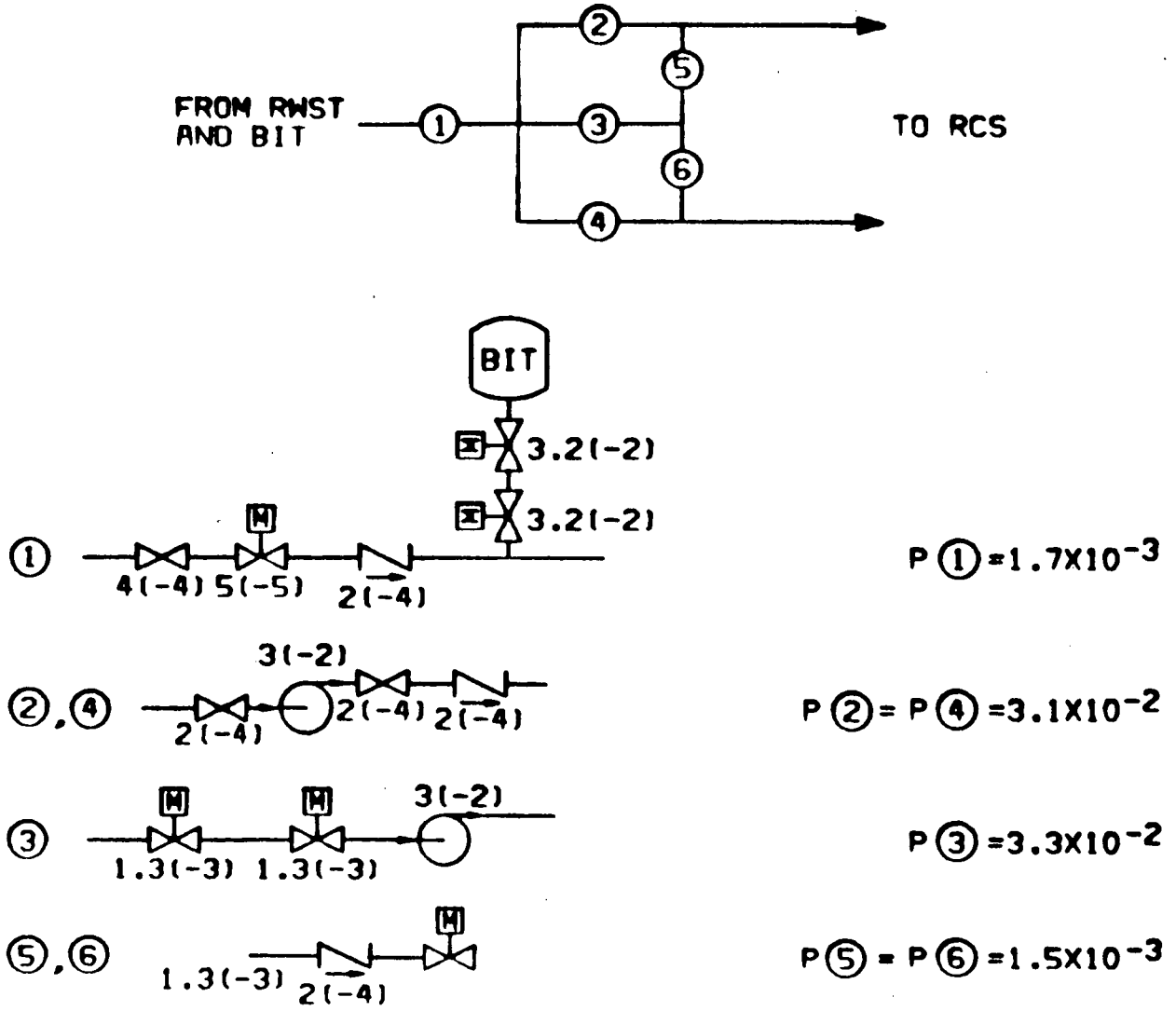

HPIS BLOCK DIAGRAM

HPIS FAILURE COMBINATIONS

COMBINATION OF BLOCKS	PROBABILITY FORMULATION	RESULT
1	1.7(-3)	1.7×10^{-3}
2 AND 3	3.1(-2) X 3.3(-2)	1×10^{-3}
2 AND 4	3.1(-2) X 3.1(-2)	9.6×10^{-4}
3 AND 4	3.3(-2) X 3.1(-2)	1×10^{-3}
2 AND 5 AND 6	3.1(-2) X 1.5(-3) X 1.5(-3)	ϵ
4 AND 5 AND 6	3.1(-2) X 1.5(-3) X 1.5(-3)	ϵ
	P(HPIS)	4.7×10^{-3}

2.1.3.4 Low Pressure Recirculation System (LPRS)

The Indian Point-2 LPRS is substantially different than the LPRS of WASH-1400. In Indian Point two subsytems, each consisting of two 100% capacity pumps, take suction on the containment sump via separate suction lines. The two subsystems combine on the discharge side, where two discharge headers carry recirculation flow, via a heat exchanger in each header, to the containment spray nozzles and to the core. Because the LPRS shares equipment with the Containment Spray Recirculation System (CSRS) there are some LPRS failures which will also fail the CSRS. The LPRS flow diagram and unavailability calculation follow.

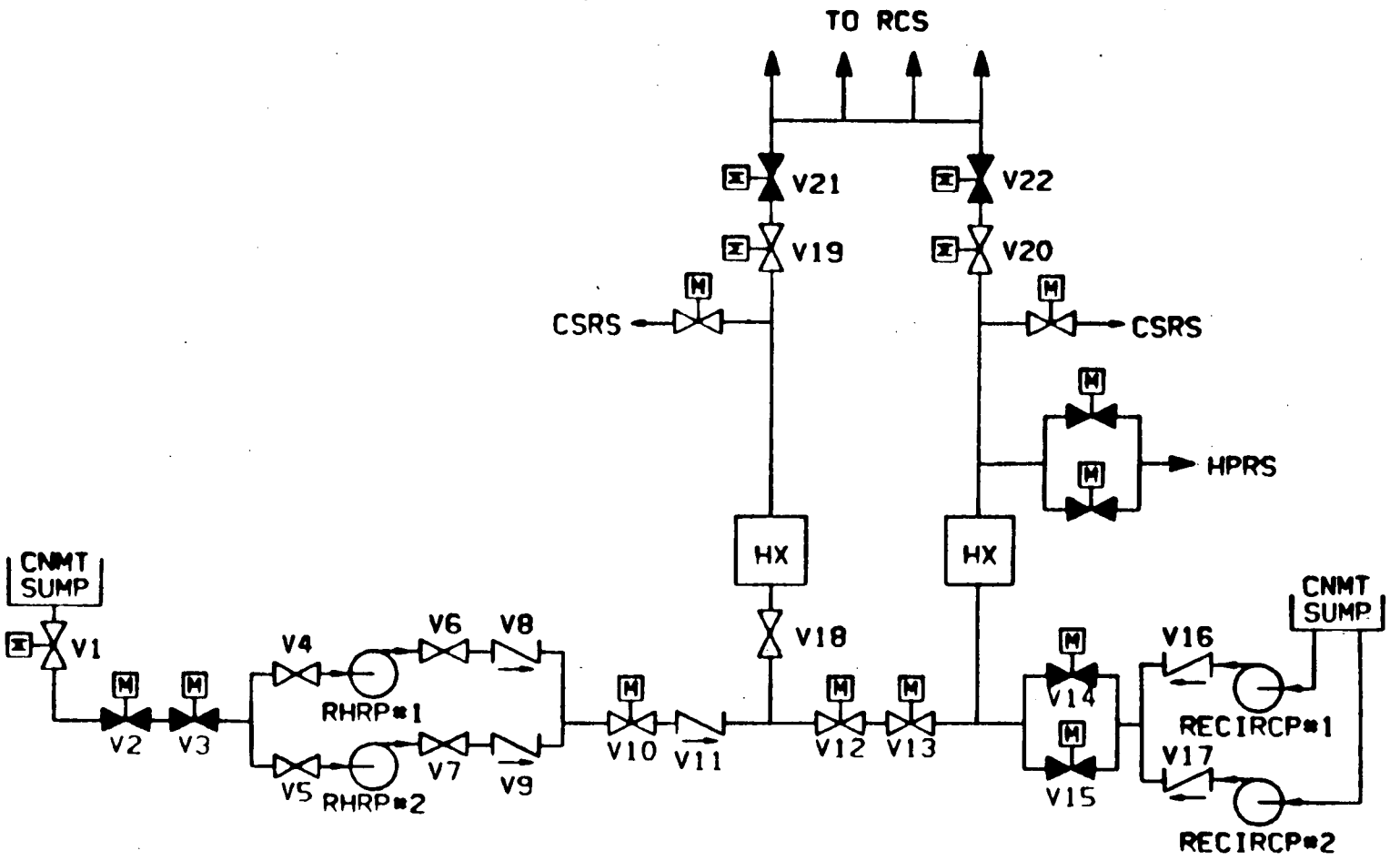

LPRS FLOW DIAGRAM

LPRS7

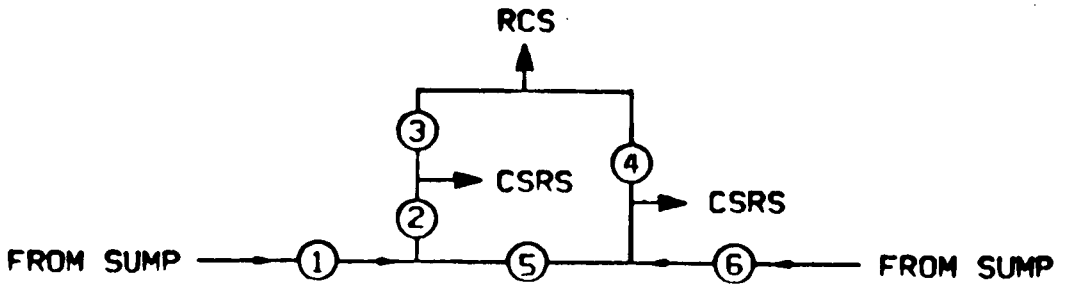

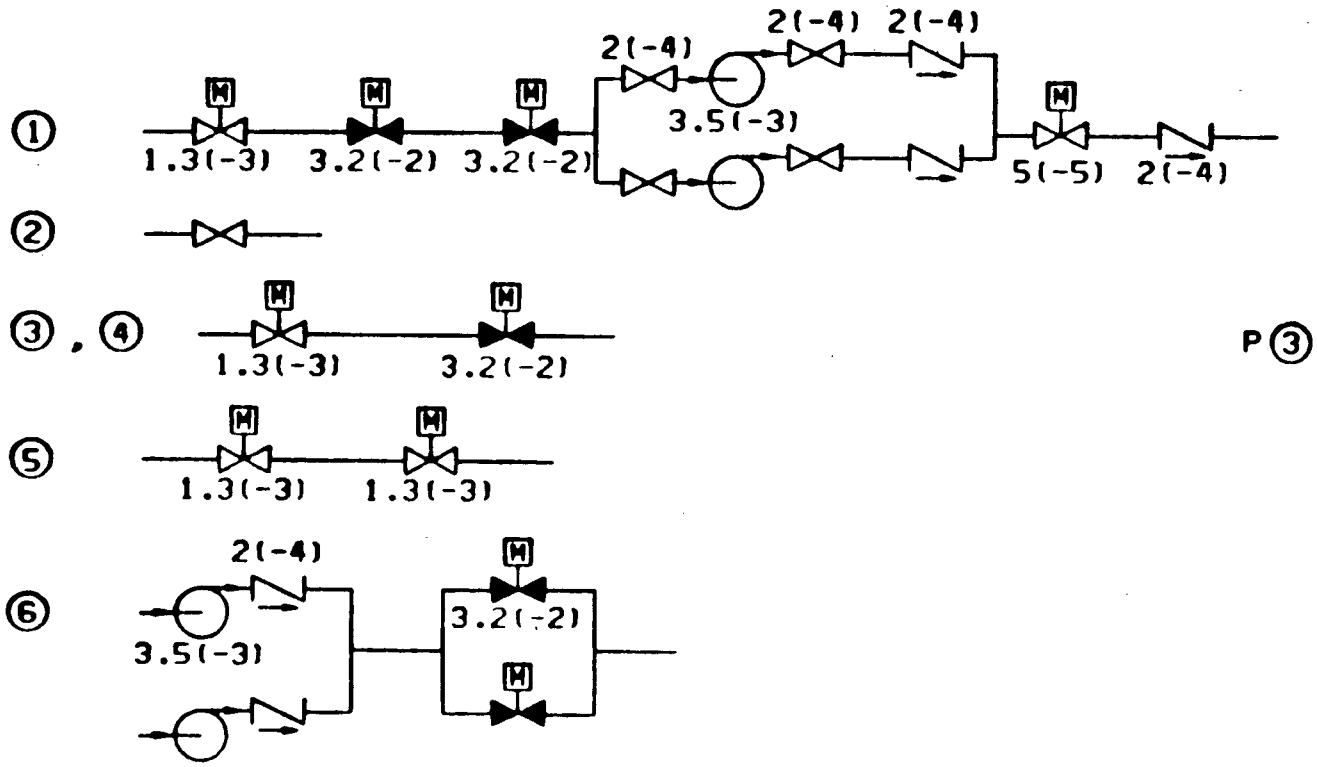

P ① =6.5X10^{-2}

P ② =2X10^{-4}

P ③ = P ④ =3.3X10^{-2}

P ⑤ =2.6X10^{-3}

P ⑥ =1X10^{-3}

LPRS BLOCK DIAGRAM

LPRS FAILURE COMBINATIONS

COMBINATIONS OF BLOCKS	PROBABILITY FORMULATION	RESULT: CSRS ALSO FAILS	RESULT: CSRS DOES NOT FAIL
1 AND 6	6.5(-2) X 1(-3)	6.5×10^{-5}	—
3 AND 4	3.3(-2) X 3.3(-2)	—	1.1×10^{-3}
5 AND 4	2(-4) X 3.3(-2)	—	ϵ
TRIPLES	—	ϵ	ϵ
	P(LPRS AND CSRS) =	6.5×10^{-5}	
	P(LPRS) =		1.1×10^{-3}

2.1.3.5 High Pressure Recirculation System (HPRS)

The HPRS is comprised of portions of the LPRS and the HPIS. The function of the LPRS is to provide adequate suction head for the safety injection pumps (part of the HPIS). The HPRS therefore differs from that in WASH-1400 because of features previously noted in Sections 2.1.3.2 and 2.1.3.4. For reasons previously stated in Section 2.1.3.4, certain failures of the LPRS (and therefore of the HPRS) result in the consequent loss of containment spray recirculation. The HPRS flow diagram and unavailability calculation follow.

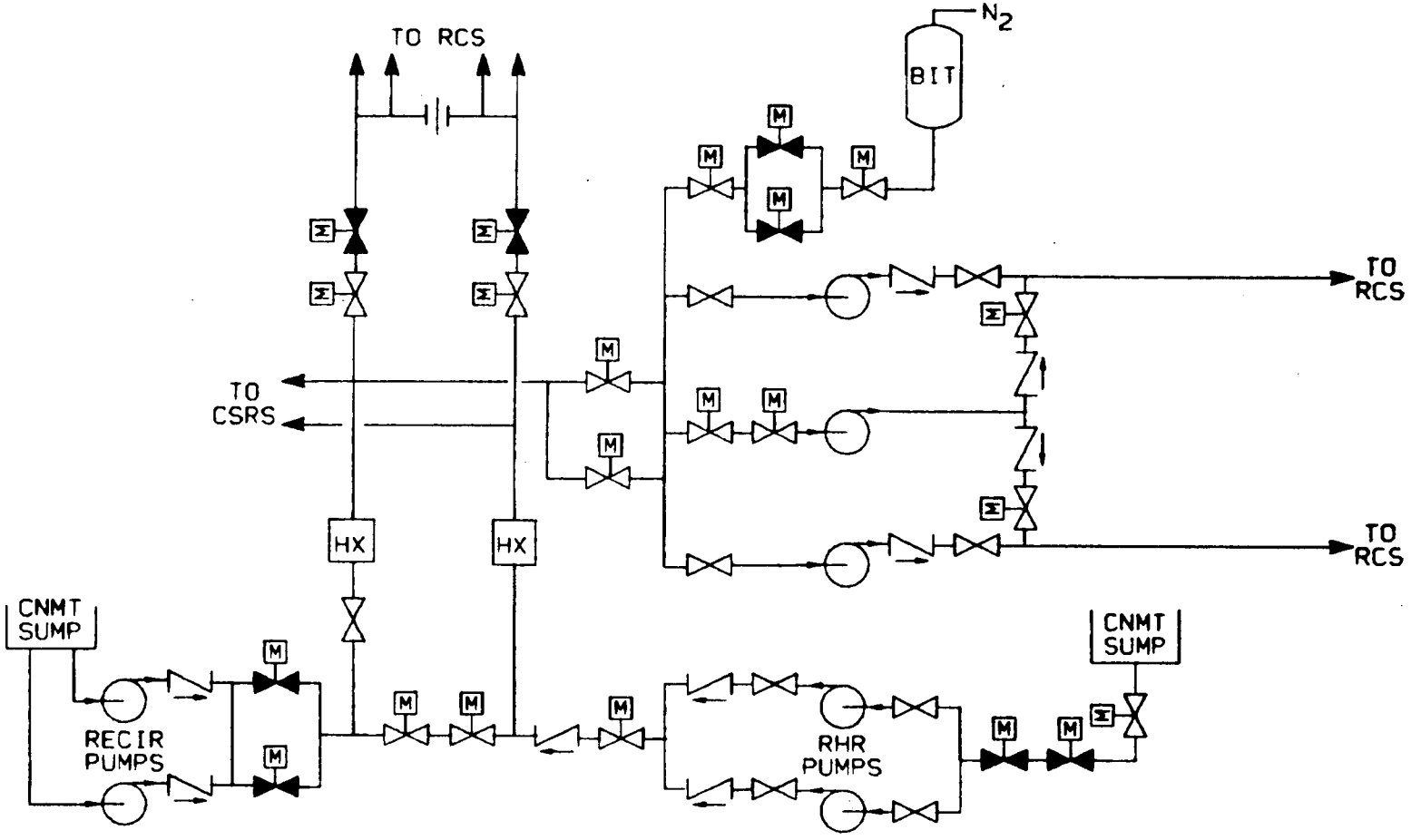

HPRS FLOW DIAGRAM

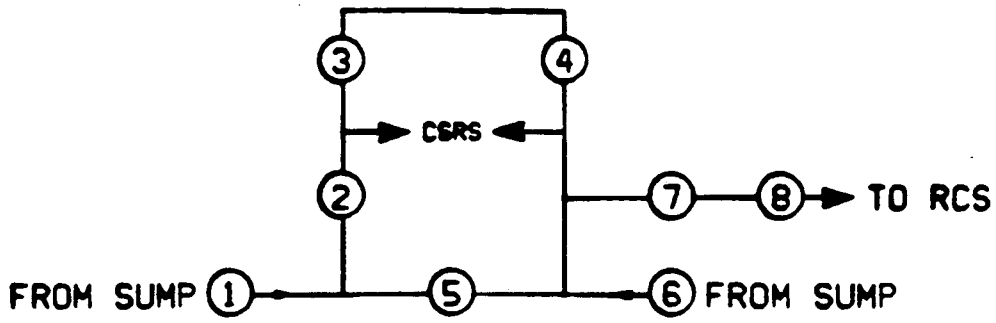

1	SEE LPRS BLOCK DIAGRAM FOR DRAWING OF THIS BLOCK	$P_1 = 6.5 \times 10^{-2}$
2	"	$P_2 = 2 \times 10^{-4}$
3	"	$P_3 = 3.3 \times 10^{-2}$
4	"	$P_4 = 3.3 \times 10^{-2}$
5	"	$P_5 = 2.6 \times 10^{-3}$
6	"	$P_6 = 1 \times 10^{-3}$
7	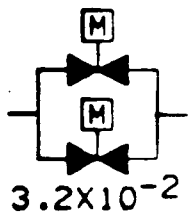	$P_7 = 1 \times 10^{-3}$
8	REFER TO THE HPIS BLOCK DIAGRAM THIS BLOCK REPRESENTS THE HIGH PRESSURE INJECTION SYSTEM LESS THE SUCTION LINE (BLOCK 1) ON THE HPIS BLOCK DIAGRAM	$P_8 = 3 \times 10^{-3}$

HPRS BLOCK DIAGRAM

HPRS FAILURE COMBINATIONS

COMBINATION OF BLOCKS	PROBABILITY FORMULATION	RESULT: CSRS ALSO FAILS	RESULT: CSRS DOES NOT FAIL
7	-	-	1×10^{-3}
8	HPIS (4.7×10^{-3}) LESS SUCTION LINE AND BIT CONTRIBUTION (1.7×10^{-3})	-	3×10^{-3}
1 AND 6	6.4(-2) X 1(-3)	6.5×10^{-5}	-
TRIPLES	-	ϵ	ϵ
	P(HPRS AND CSRS) =	6.5×10^{-5}	
	P(HPRS) =		4×10^{-3}

2.1.3.6 Interfacing Check Valves

The basic piping arrangement between the LPIS/LPRS and the Reactor Coolant System is sketched on the following page. As can be seen, the 600 psi and 2500 psi piping are separated by two check valves and a normally closed motor-operated valve. The system sketched on Page V-58 of WASH-1400 is similar insofar as check valve arrangement is concerned. A difference of fundamental importance is that the 2500 psi and 600 psi systems in Indian Point Unit 2 are normally separated by a closed motor-operated valve. Thus, check valve failure is meaningful only if the motor-operated valves are mispositioned. Another important difference is that much of the 600 psi piping in Indian Point-2 is inside containment; in the WASH-1400 system the interface between 2500 psi and 600 psi piping is outside containment. Further in Indian Point-2 there is a check valve in the 600 psi piping inside containment just prior to the containment penetration. For these reasons, it is most likely that a double check valve failure (assuming the motor-operated isolation valve to be incorrectly open) will result in rupture of 600 psi piping inside containment with blowdown also inside containment. It is judged that the conditional probability of rupture and blowdown outside containment given check valve failure (and isolation valve mispositioning)is no more than 0.1.

Check valve testing is another important difference from WASH-1400. Indian Point-2 has test connections which permit verification of both check valves in the line to each loop. These valves are presently tested at 15 month intervals, but not necessarily at each RCS repressurization. The check valve failure probability calculation follows.

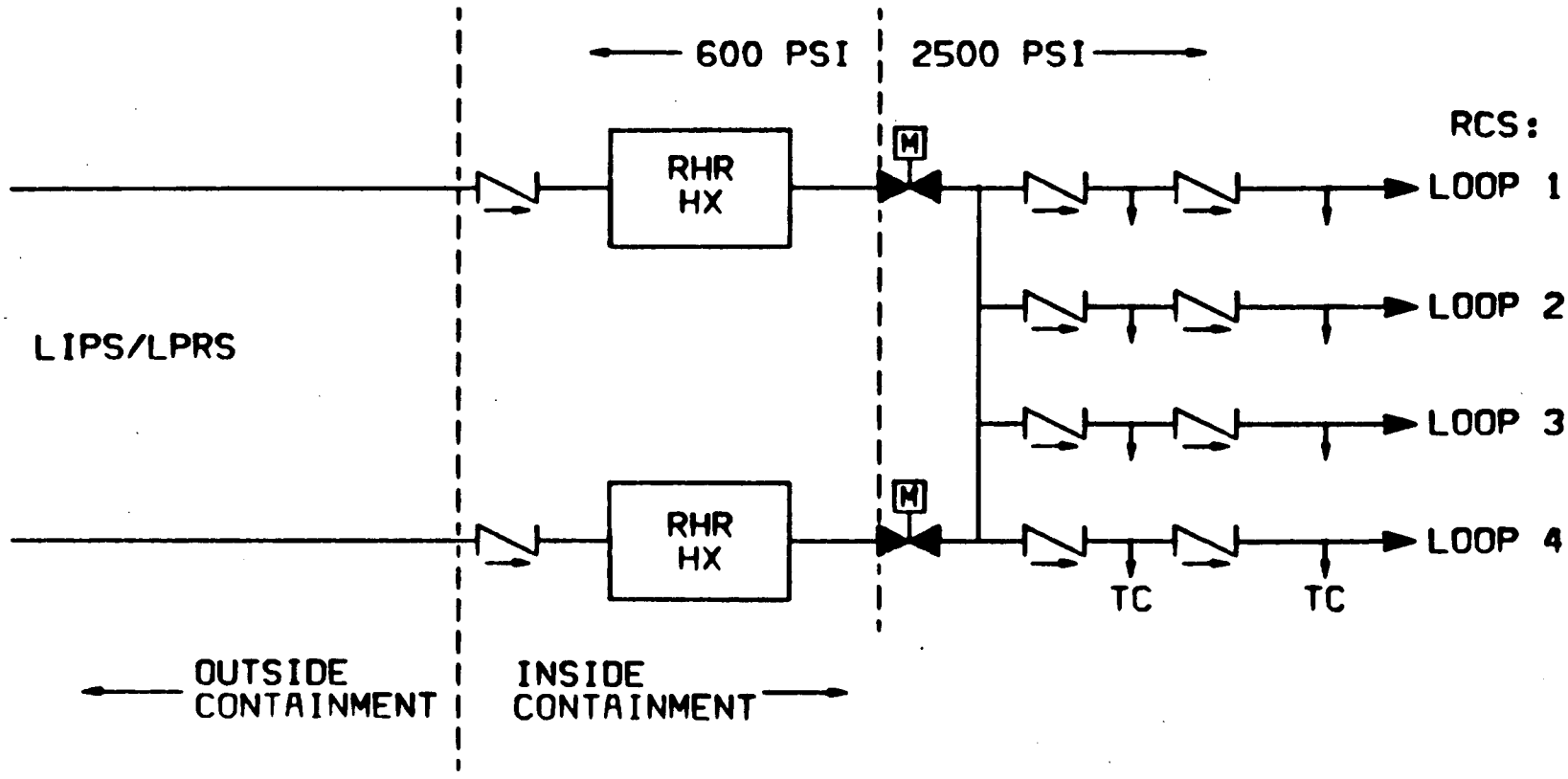

DIAGRAM OF INTERFACING CHECK VALVES

INTERFACING CHECK VALVE FAILURE CALCULATION

The following calculation is based on the model and failure rates given in WASH-1400, Appendix V, Section 4.4, pp. V-43 and V-44.

Q_o =	failure of one check valve pair, one ordered double, assuming isolation valves are open	$1/2\,\lambda_R \lambda_L t^2$
Q_1 =	Failure of one check valve pair, two ordered doubles, assuming isolation valves are open	$= 2Q_o$
Q =	Failure of any one of four check valve pairs, assuming isolation valves are open	$= 4Q_1$
V =	Failure of any one of four check valve pairs with blowdown outside containment, assuming isolation valves are open	$= 0.1Q$
λ_L =	failure rate from gross leakage	$= 2.6 \times 10^{-3}$/yr
λ_R =	failure rate from internal rupture	$= 8.8 \times 10^{-5}$/yr
t =	test interval	= 15 mos = 1.25 yr
p(V, given isolation valves open)		$= 0.4(1.6 \times 10^{-3}) \times \ldots$ $(8.8 \times 10^{-5}) \times \ldots$ $(1.25)^2 = 1.4 \times 10^{-7}$

Taking into account the effect of normally closed isolation valves on the probability of Event V, one obtains the following:

Define X as the state of isolation valves	Valve 1 Open	Valve 2 Open	Valves 1 and 2 Open	Valves 1 and 2 Shut
p(X) (Note 1)	10^{-3}	10^{-3}	10^{-6}	1
p(V/X)	1.4(-7)	1.4(-7)	1.4(-7)	0
P(X). p(V/X)	1.4(-10)	1.4(-10)	ϵ	0

$$p(V) = \sum p(X) \cdot p(V/X) = \underline{2.8 \times 10^{-10}}$$

Note 1: It is assumed that the probability of either valve being open at the time of check valve failure is 1×10^{-3}.

2.1.3.7 Auxiliary Feedwater System (AFWS)

The Indian Point AFWS is similar to the WASH-1400 system in that each consists basically of two motor-driven pumps and one turbine-driven pump, each capable of supplying the required feedwater flow. There are numerous differences in piping layout. The AFWS flow diagram and unavailability calculation follow.

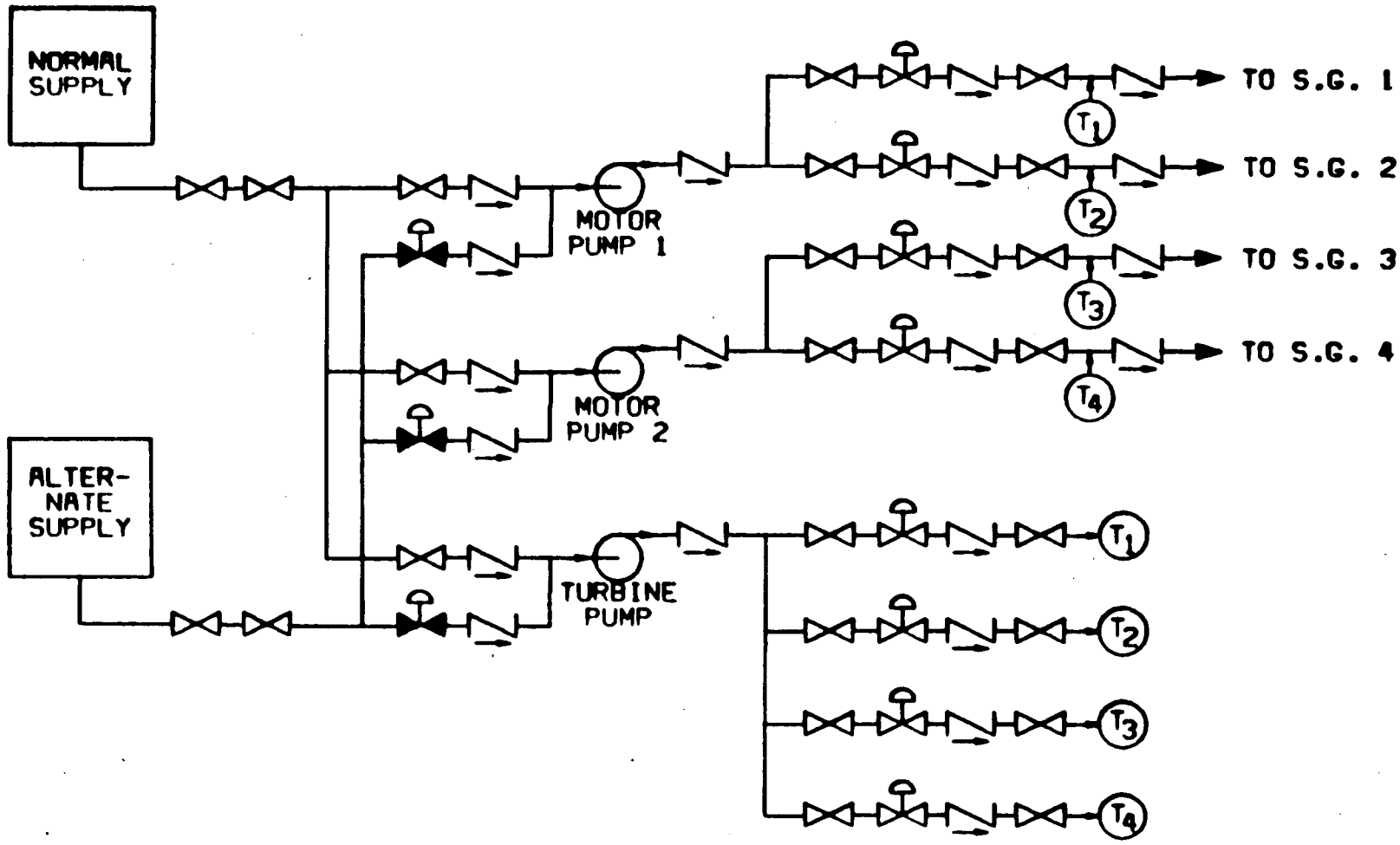

AFWS FLOW DIAGRAM

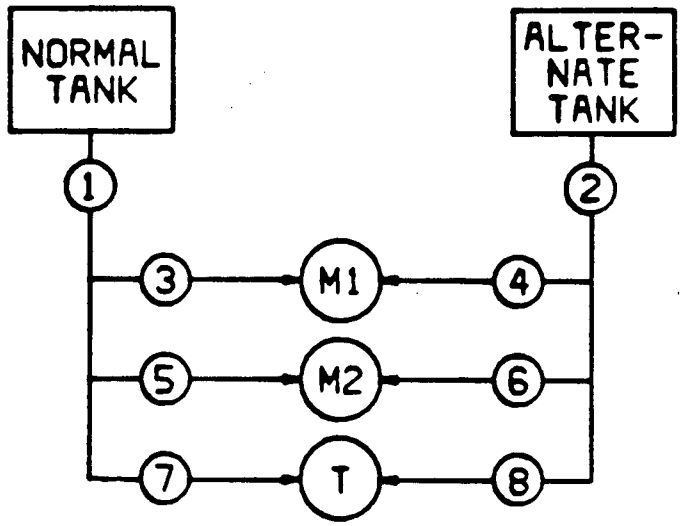

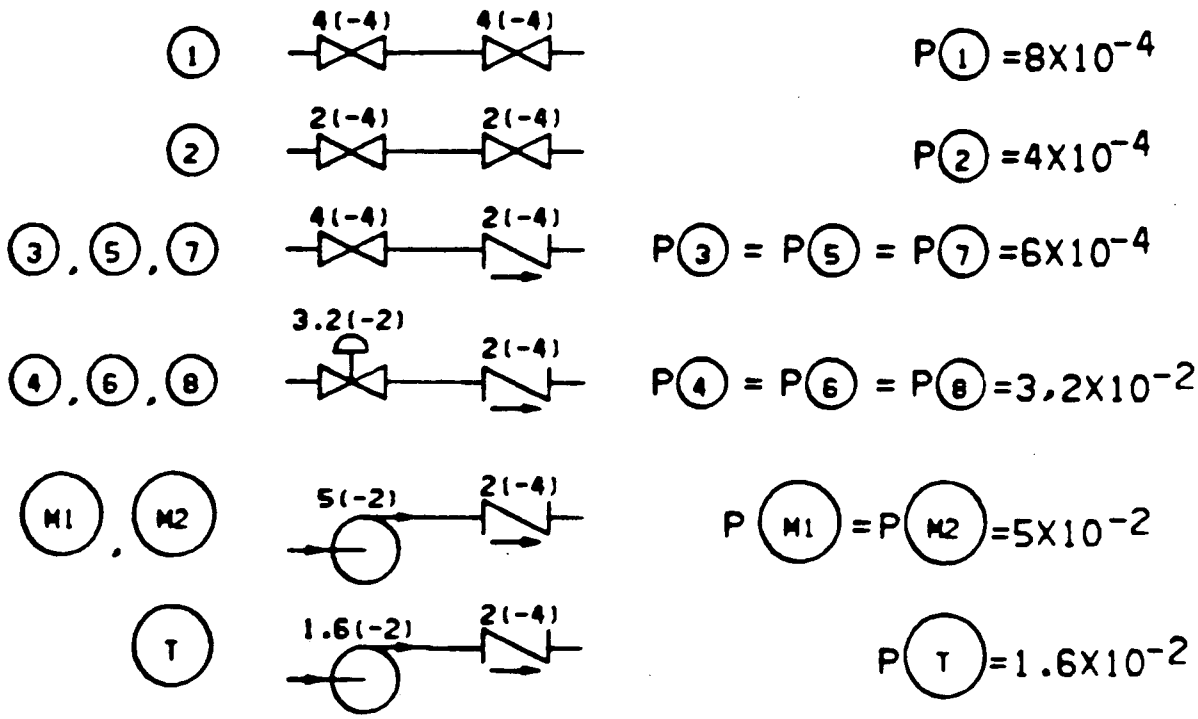

AFWS BLOCK DIAGRAM
PUMPS AND SUCTION PIPING

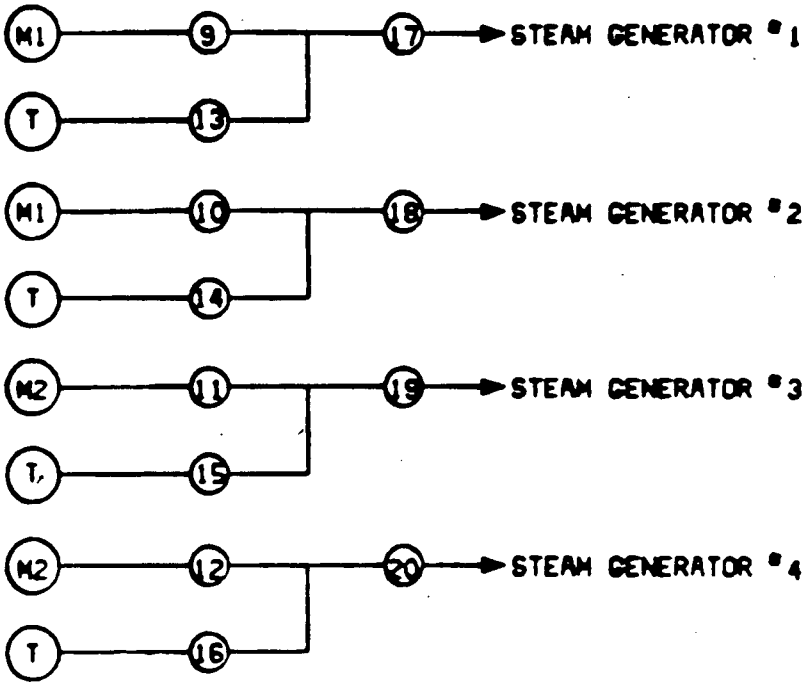

9 THROUGH 16

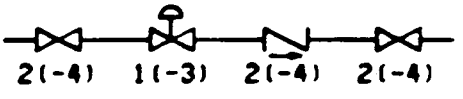

P 9 THROUGH P 16 = 1.6×10^{-3}

17 THROUGH 20

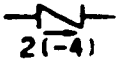

P 17 THROUGH P 20 = 2×10^{-4}

AFWS BLOCK DIAGRAM
PUMP DISCHARGE HEADERS

AFWS FAILURE COMBINATIONS

COMBINATION OF BLOCKS	PROBABILITY CALCULATION	RESULT: AC POWER AVAILABLE	RESULT: NO AC POWER
(1) AND (2)	4(-4) X 8(-4)	3.2×10^{-7}	3.2×10^{-7}
(M1) AND (M2) AND (T)	5(-2) X 5(-2) X 1.6(-2)	4×10^{-5}	–
	1 X 1 X 1.6(-2)	–	1.6×10^{-2}
(M1) AND (T) AND [(11) OR (12) OR (19) OR (20)]	5(-2) X 1.6(-2) X [1.6(-3) + 1.6(-3) + 2(-4) + 2(-4)]	2.9×10^{-6}	–
	1 X 1.6(-2) X [1.6(-3) + 1.6(-3) + 2(-4) + 2(-4)]	–	ϵ
(M2) AND (T) AND [(9) OR (10) OR (17) OR (18)]	5(-2) X 1.6(-2) X [1.6(-3) + 1.6(-3) + 2(-4) + 2(-4)]	2.9×10^{-6}	–
	1 X 1.6(-2) X [1.6(-3) + 1.6(-3) + 2(-4) + 2(-4)]	–	ϵ
	P(AFWS) = P(L)	4.6×10^{-5}	1.6×10^{-2}

2.1.3.8 Onsite AC Power System

There are substantial differences between Indian Point and the system in WASH-1400. At Indian Point there are three diesel generators for each unit. Each diesel generator can be closed in on its normal bus and on any of the other two diesel generator buses which may be deenergized. In addition, there are three gas turbines at the site. The total unavailability of onsite AC power is estimated as follows:

<u>Failure of Diesel Generators</u>

Independent failure of all 3 diesel generators, $p(3/3) = (5.7 \times 10^{-2})^3$	1.9×10^{-4}	(See Appendix A)
Probability of an assumed Common Mode affecting diesel generators	1×10^{-4}	(See Appendix A)
P(3/3 diesel generators)	2.9×10^{-4}	

Failure of Gas Turbines

CONDITION	PROBABILITY FORMULATION	RESULT
None in Maintenance and three fail to start	$(0.7)^3 \times (0.1)^3$	3.4×10^{-4}
One in Maintenance and two fail to start	$3(.3)\ (.7^2) \times (3)\ (.1))^2\ (.9)$	1.2×10^{-2}
Two in Maintenance and one fails to start	$3(.3)^2\ (.7) \times (3)\ (.1)\ (.9)^2$	4.6×10^{-2}
Three in Maintenance	$(0.3)^3$	2.7×10^{-2}
p(3/3 gas turbines)		8.5×10^{-2}

p(onsite AC) = p(diesels) X p(gas turbines) = 2.5×10^{-5}

2.2 ACCIDENT SEQUENCE PROBABILITIES - INDIAN POINT UNIT 3

2.2.1 INITIATING EVENTS AND SUCCESS CRITERIA

The following subsections define each of the initiating events and the minimum safeguards equipment required to protect the core, i.e., the success criteria. These success criteria are applied in Section 2.2.3 in calculating the probability that the required safeguards equipment fails upon demand.

2.2.1.1 Event A: Large (Greater Than 6 Inch) RCS Pipe Break

Sequence AD

In this sequence core melt occurs because Emergency Coolant Injection (ECI) fails to operate as designed. Successful ECI requires that the accumulator in each intact loop operate and that flow be provided from at least one of the RHR pumps. Thus it is necessary for the Accumulator System and the Low Pressure Injection System (LPIS) to operate successfully. Failure of either system constitutes ECI failure (Event D).

Sequence AH

In this sequence core melt occurs because Emergency Coolant Recirculation (ECR) fails to operate properly. Successful ECR requires flow from at least one of the recirculation pumps or from at least one of the RHR pumps, each of which takes suction on the containment sump. Successful recirculation also requires that the operator makes no incorrectable error during the shiftover from coolant injection to coolant recirculation. In many cases of operator error, equipment damage would not result and adequate time would be available for corrective action. Collectively, the recirculation and RHR Subsystems constitute the Low Pressure Recirculation System (LPRS). Failure of ECR is designated as Event H.

Sequence AHF

The LPRS provides containment spray recirculation flow to the spray headers in addition to core recirculation. For this reason certain LPRS failures will also result in the loss of containment spray recirculation (Event F). Note that the installed containment fan coolers are redundant to spray recirculation, insofar as containment pressure suppression is concerned; however, the fan coolers are not as effective as spray for fission product removal from the containment atmosphere.

2.2.1.2 Event S_1: RCS Pipe Break of 2 Inch to 6 Inch Diameter

Sequence S_1D

In this sequence core melt occurs because ECI fails to operate properly. The systems required for successful accident response are the Accumulator System and the High Pressure Injection System (HPIS). That is successful ECI requires that flow be provided from the accumulator in each intact loop, and from at least two of the three safety injection pumps.

Sequence S_1H

In this sequence core melt occurs because ECR fails to operate properly. Successful ECR requires operation of the High Pressure Recirculation System (HPRS). The HPRS combines the LPRS and the HPIS into a single system. The LPRS provides suction head for the HPIS pumps as well as heat rejection. The HPIS pumps provide the necessary head to discharge against RCS pressure. It is required that flow be provided from at least one of the four LPRS pumps (2 RHR Pumps and 2 Recirculation Pumps) and from any two of the

three safety injection pumps. As noted under Event A (Section 2.2.1.1) successful recirculation requires correct operator action to affect the switchover from injection to recirculation.

Sequence S_1HF

As noted under Event A (Section 2.2.1.1), certain failures of the LPRS (which is a part of the HPRS) result in the coincident loss of containment spray recirculation (Event F).

2.2.1.3 Event S_2: RCS Pipe Break of 1/2 Inch to 2 Inch Diameter

Sequence S_2

The success criteria for ECI are the same as the Event S_1 (Section 2.2.1.2), except that the loop accumulators are not required to function.

Sequence S_2H

The success criteria for ECR are the same as for Event S_1 (Section 2.2.1.2).

Sequence S_2HF

The remarks under Event S_1 (Section 2.2.1.2) apply also to Event S_2.

2.2.1.4 Event V: Interfacing Check Valve Failure

Event V, which is defined strictly as a LOCA through interfacing low pressure piping and with blowdown outside containment, is assumed to be sufficient in itself to result in core meltdown. This assumption is consonant with WASH-1400 but very conservatively neglects the possibility of

terminating blowdown by successful closure of the motor-operated valve at the boundary between 2500 psi and 600 psi piping. Successful valve operation would terminate blowdown outside containment and would greatly improve the prospect for long term core cooling.

2.2.1.5 Event T: Transient Loss of Offsite Power

Event T was found to result in a core melt accident sequence only for the transient loss of offsite power which is followed by a complete loss of AC power in the plant. Successful response requires that a heat sink be provided by the turbine-driven portion of the Auxiliary Feedwater System. Failure of this system is designated Event L. Loss of onsite AC power is designated Event B and the sustained loss of offsite AC power following the initial transient is designated Event M. Sequence TMLB is, therefore, a total loss of AC power and turbine AFWS failure for a period of time sufficient to result in core melt. If, following the onset of core meltdown, some source of AC power is restored, there will be at least some capability for containment pressure suppression and fission product removal from the atmosphere. Recovery of some AC power source is designated Event B'' and non-recovery is designated Event B'.

2.2.2 ACCIDENT SEQUENCE SUMMARY

The estimated probability for each of the dominant accident sequences is tabulated below. For each sequence, the probability is broken down into its major constituents, i.e.. initiating event, probability, mitigating system unavailability, operator error, etc. The calculation of system unavailabilities is detailed in Section 2.2.3. Initiating event probabilities are taken from WASH-1400, except where otherwise noted. A glossary of abbreviations is contained in Appendix B for the benefit of those not familiar with the terminology used in WASH-1400.

Sequence AD

p (LPIS)	4.2×10^{-3}
p (Accumulators)	1.2×10^{-3}
p (D)	5.4×10^{-3}
p (A)	1×10^{-4}
p (AD)	5.4×10^{-7}

Sequence AH

p (LPRS, No Loss of CSRS) = p(H)	1.6×10^{-5}
p (A)	1×10^{-4}
p (AH)	1.6×10^{-9}

Sequence AHF

p (LPRS, CSRS Also Failed)	6.4×10^{-5}
p (Operator Error During Injection Recirc. Shift)	3×10^{-3}
p (HF)	3×10^{-3}
p (A)	1×10^{-4}
p (AHF)	3×10^{-7}

Sequence S_1D

p (HPIS)	3.6×10^{-3}
p (Accumulators)	1.2×10^{-3}
p (D)	4.8×10^{-3}
p (S_1)	3×10^{-4}
p (S_1D)	1.4×10^{-6}

Sequence S_1H

p (HPRS, No Loss of CSRS) = P(H)	4×10^{-3}
p (S_1)	3×10^{-4}
p (S_1H)	1.2×10^{-6}

Sequence S_1HF

p (HPRS, CSRS Also Failed)	6.4×10^{-5}	
p (Operator Error During Injection-Recirc. Shift)	3×10^{-4}	(Note 1)
p (HF)	3.6×10^{-4}	
p (S_1)	3×10^{-4}	
p (S_1HF)	1.1×10^{-7}	

Note 1: Reduced by a factor of 10 from the probability stated in WASH-1400 to account for the shift technical advisor. Credit was not taken in Sequence AHF because of the reduced reaction time available.

Sequence S_2D

p (HPIS) = p(D)	3.6×10^{-3}
p (S_2)	1×10^{-3}
p (S_2D)	3.6×10^{-6}

Sequence S_2H

p (HPRS, No Loss of CSRS = p(H)	4×10^{-3}
p (S_2)	1×10^{-3}
p (S_2H)	4×10^{-6}

Sequence S_2HF

p (HPRS, CSRS Also Failed)	6.4×10^{-5}	
(Operator Error During Injection Recirc. Shift)	3×10^{-4}	(Note 1, previous page)
p (HF)	3.6×10^{-4}	
p (S_2)	1×10^{-3}	
p (S_2HF)	3.6×10^{-7}	

Sequence V

p (V)	5.2×10^{-8}

Sequence TMLBB'

p (T), Transient Loss of Offsite AC Power	0.2
p (M), Loss of Offsite AC Power to About 1 Hour	0.2
p (B), Loss of Onsite AC Power	2.5×10^{-5}
p (L), Loss of Turbine - AFW	1.6×10^{-2}
p (B), Non-Recovery of Any AC Power to About 3 Hours	0.5
p (TMLBB')	8×10^{-9}

Sequence TMLBB"

p (T)	0.2
p (M)	0.2
p (B)	2.5×10^{-5}
p (L)	1.6×10^{-2}
p (B"), Successful Recovery of Some AC Power Within 3 Hours $p(B'') = 1 - p(B')$	0.5
p (TMLBB")	8×10^{-9}

2.2.3 System Unavailability Estimates

This section provides point estimates of the probability that systems required to respond to initiating events will fail upon demand. The subsection for each system generally consists of (1) a brief description of significant differences from the system configuration which was the basis for WASH-1400, (2) a simplified flow diagram (where significant differences from WASH-1400 exist) and (3), the calculation of system failure probability (or unavailability). Component failure data and the sources of these data are presented in Appendix A to this report. A glossary of symbols is presented in Appendix B.

2.2.3.1 Accumulator System (ACCS)

The accumulator system is similar to that in WASH-1400, except that there are four loops instead of only 3 loops. The WASH-1400 unavailability must therefore be converted from 1 out of 2 to 1 out of 3 (the accumulator in the failed loop is assumed to be lost).

$p(1/2\ ACC) = 8.3 \times 10^{-4}$ (WASH-1400, Table II 1-2)

$p(1/1) = 1/2\ p\ (1/2) = 4.15 \times 10^{-4}$

$p(1/3) = 3p(1/1) = 1.2 \times 10^{-3}$

$p(ACCS) = p(1/3) = \underline{1.2 \times 10^{-3}}$

2.2.3.2 Low Pressure Injection System (LPIS)

The LPIS is similar to that in WASH-1400. The system unavailability is therefore judged to be comparable to that calculated in WASH-1400.

$p(LPIS) = 4.2 \times 10^{-3}$ (WASH-1400, Figure II 5-35)

Note: p(1/3) is read, "the probability that one out of three fails." And so on for other similar notation.

2.2.3.3 High Pressure Injection System (HPIS)

The HPIS is similar to that in WASH-1400, in that each system uses three 50% capacity pumps. There are, however, differences in piping configuration. For example, the Indian Point 3 HPIS has two HPIS discharge headers, one of which contains the Boron Injection Tank. The system flow diagram and unavailability calculation follow.

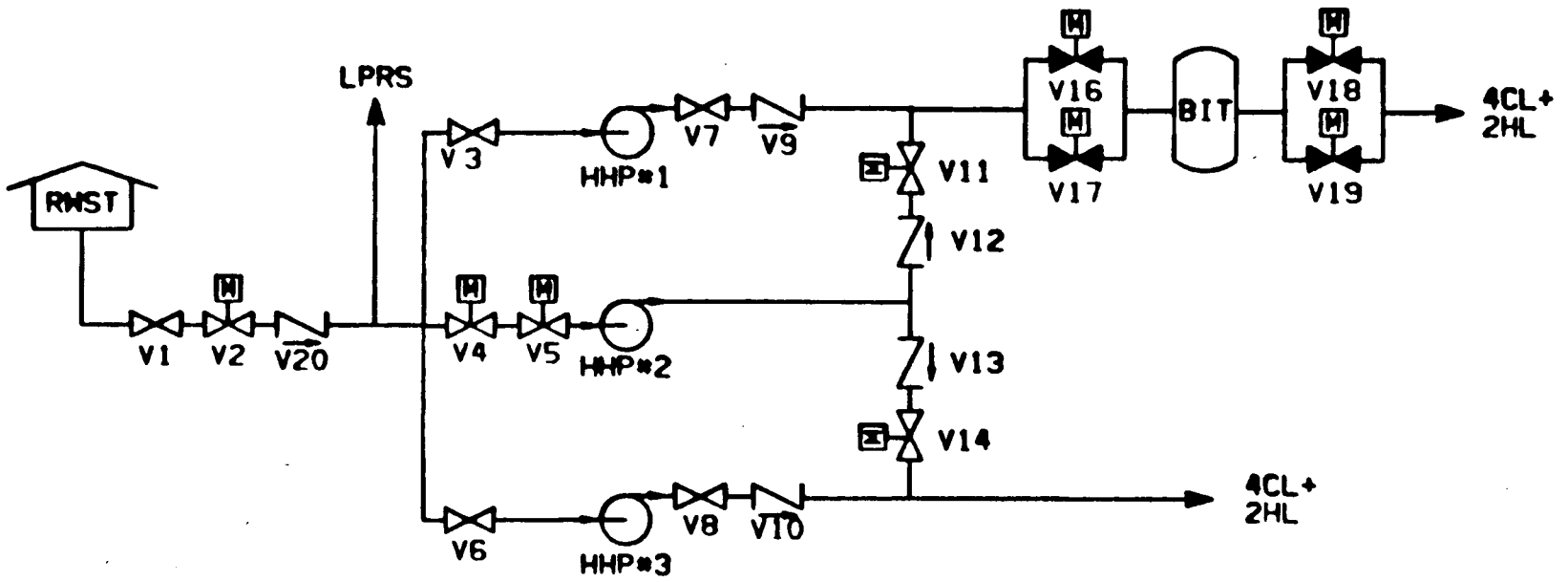

HPIS FLOW DIAGRAM

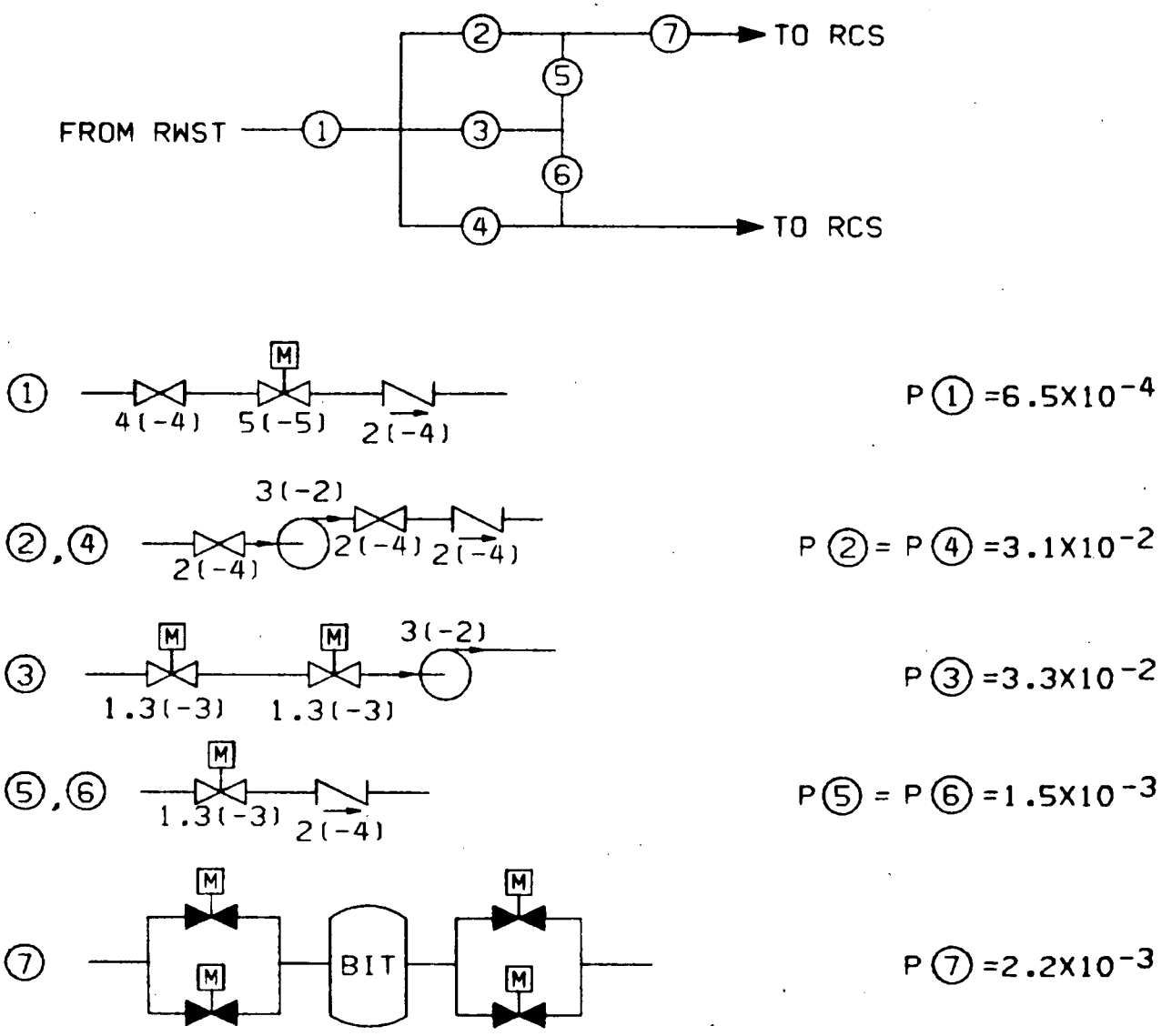

HPIS BLOCK DIAGRAM

HPIS FAILURE COMBINATIONS

COMBINATION OF BLOCKS	PROBABILITY FORMULATION	RESULT
1	6.5(-4)	6.5×10^{-4}
2 AND 3	3.1(-2) X 3.3(-2)	1×10^{-3}
2 AND 4	3.1(-2) X 3.1(-2)	9.6×10^{-4}
3 AND 4	3.3(-2) X 3.1(-2)	1×10^{-3}
6 AND 7	1.5(-3) X 2.2(-3)	3.3×10^{-6}
	P(HPIS) =	3.6×10^{-3}

2.2.3.4 Low Pressure Recirculation Systems (LPRS)

The Indian Point-3 LPRS is substantially different than the LPRS of WASH-1400. In Indian Point, two subsystems, each consisting or two 100% capacity pumps, take suction on the containment sump via separate suction lines. The two subsystems combine on the discharge side, where two discharge headers carry recirculation flow, via a heat exchanger in each header, to the containment spray nozzles and to the core. Because the LPRS shares equipment with the Containment Spray Recirculation System (CSRS) there are some LPRS failures which will also fail the CSRS. The LPRS flow diagram and unavailability calculation follow.

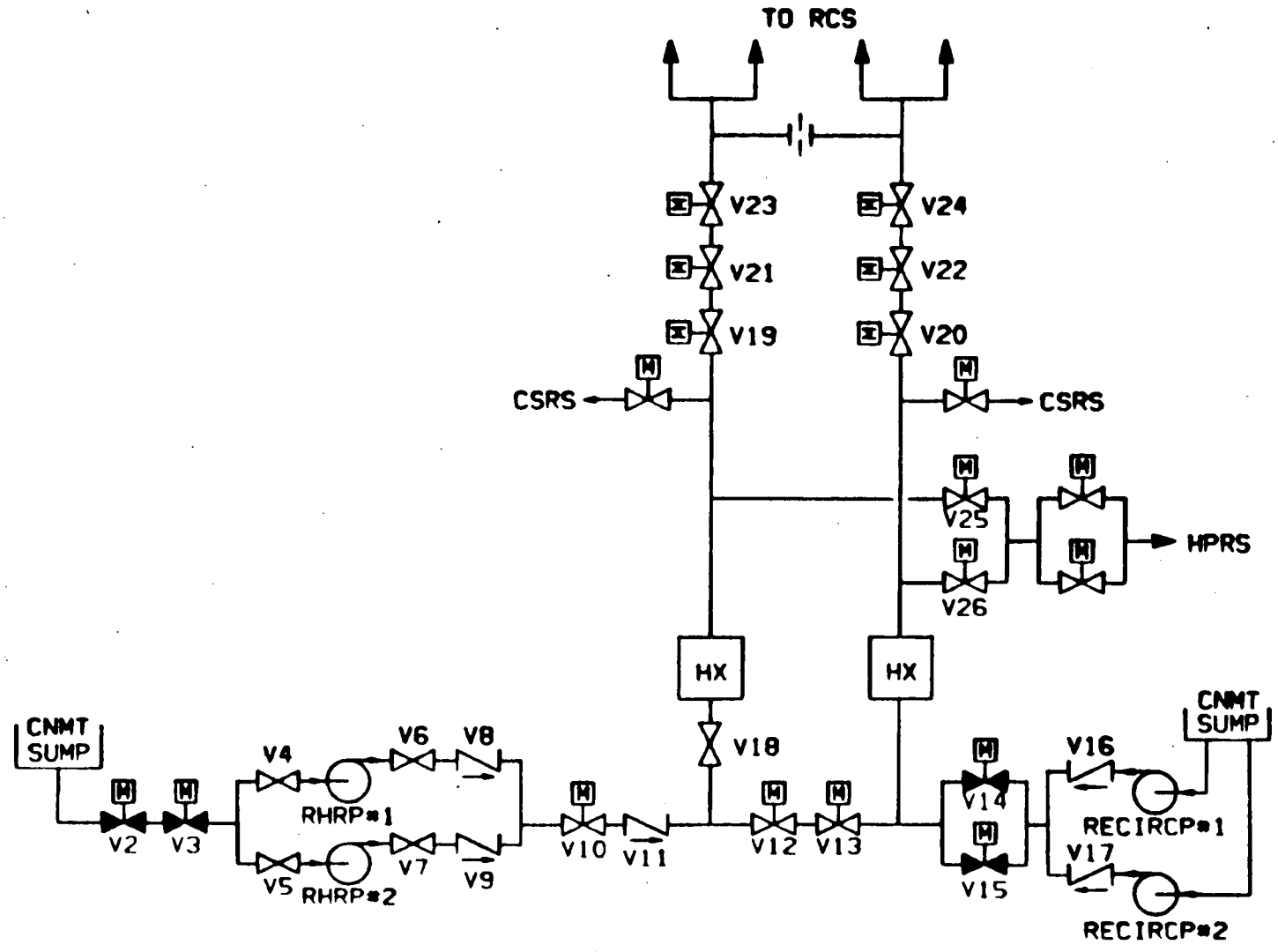

LPRS FLOW DIAGRAM

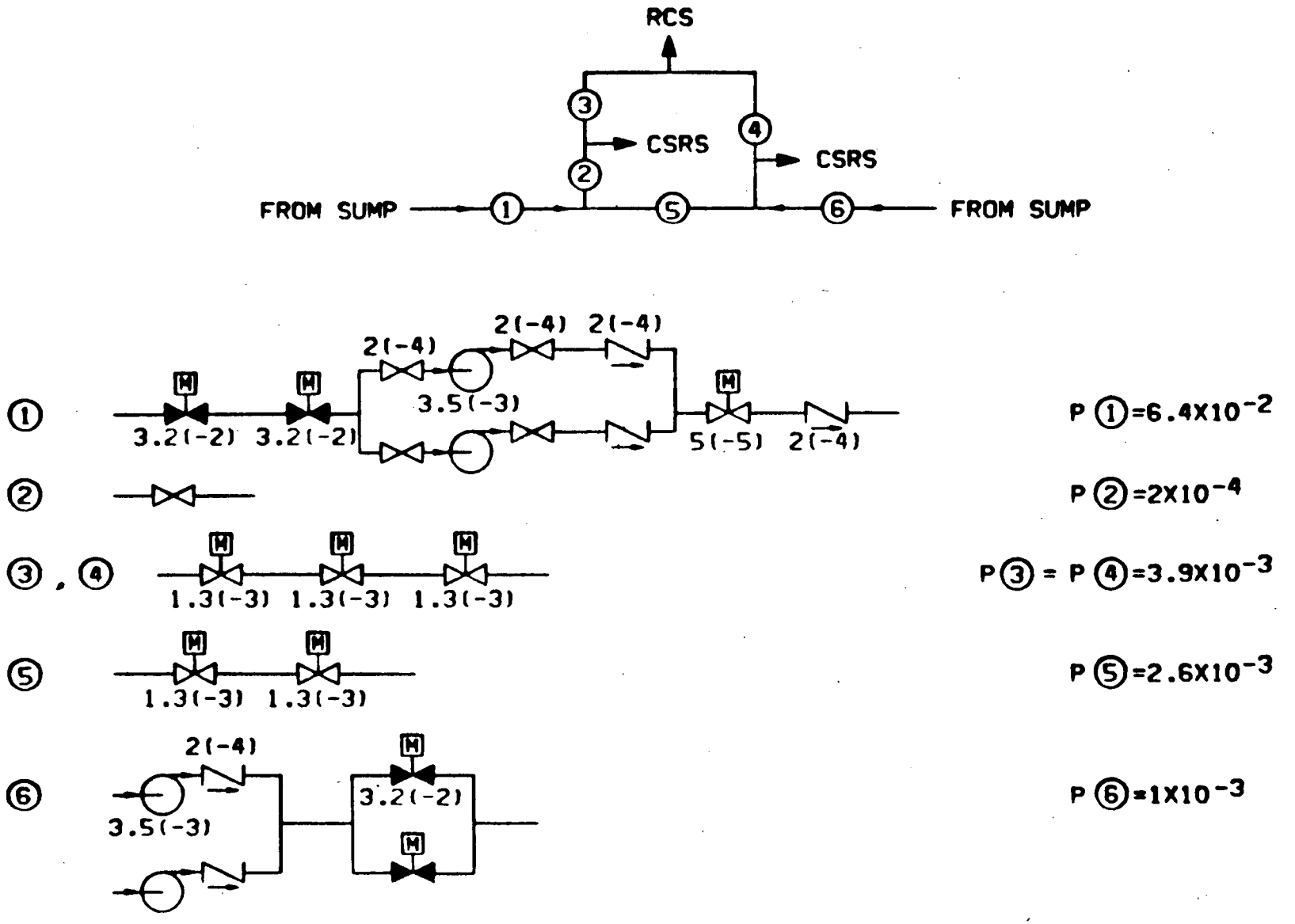

P ① $=6.4\times10^{-2}$

P ② $=2\times10^{-4}$

P ③ = P ④ $=3.9\times10^{-3}$

P ⑤ $=2.6\times10^{-3}$

P ⑥ $=1\times10^{-3}$

LPRS BLOCK DIAGRAM

LPRS FAILURE COMBINATIONS

COMBINATIONS OF BLOCKS	PROBABILITY FORMULATION	RESULT: CSRS ALSO FAILS	RESULT: CSRS DOES NOT FAIL
1 AND 6	6.4(-2) X 1(-3)	6.4(-5)	—
3 AND 4	3.9(-3) X 3.9(-3)	—	1.5(-5)
2 AND 4	2(-4) X 3.9(-3)	—	7.8(-7)
1 AND 5 AND 4	6.4(-2) X 2.6(-3) X 3.9(-3)	—	6.5(-7)
OTHER TRIPLES	—	ϵ	ϵ
	P(LPRS AND CSRS) =	6.4×10^{-5}	
	P(LPRS) =		1.6×10^{-5}

2.2.3.5 High Pressure Recirculation System (HPRS)

The HPRS is comprised of portions of the LPRS and the HPIS. The LPRS provides suction to the three pumps in the HPIS, any two of which provide adequate recirculation flow to the core. The HPRS differs from the WASH-1400 system for the reasons previously noted in Sections 2.2.3.2. and 2.2.3.4. For reasons stated in Section 2.2.3.4. certain failures of the LPRS (and therefore of the HPRS) result in the consequent loss of containment spray recirculation. The HPRS flow diagram and unavailability calculation follow.

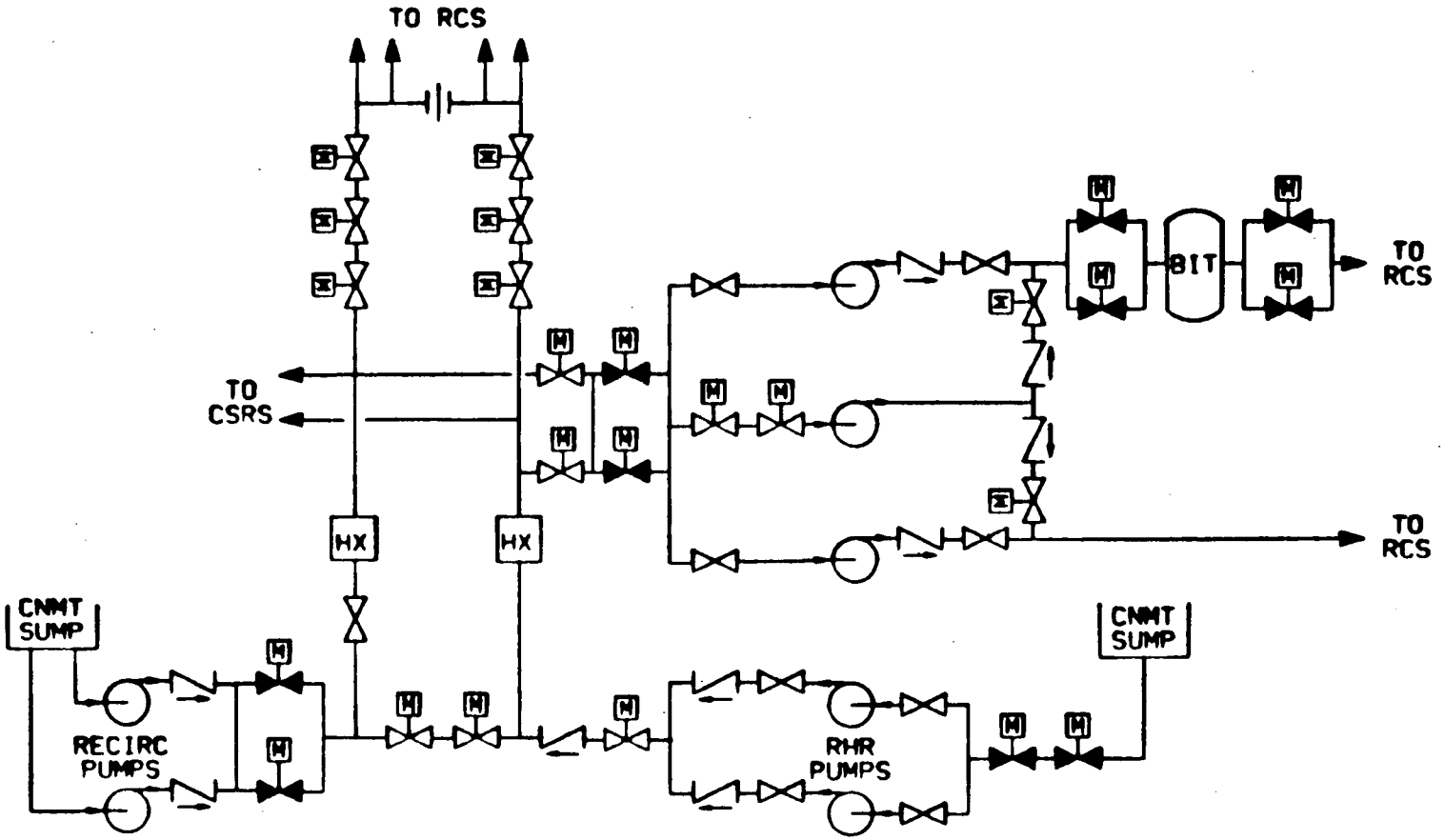

HPRS FLOW DIAGRAM

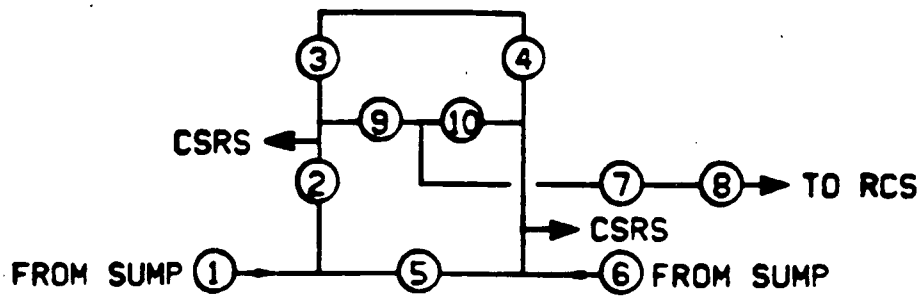

1	SEE LPRS BLOCK DIAGRAM FOR DRAWING OF THIS BLOCK	$P_1 = 6.4 \times 10^{-2}$
2	"	$P_2 = 2 \times 10^{-4}$
3	"	$P_3 = 3.9 \times 10^{-3}$
4	"	$P_4 = 3.9 \times 10^{-3}$
5	"	$P_5 = 2.6 \times 10^{-3}$
6	"	$P_6 = 1 \times 10^{-3}$
7	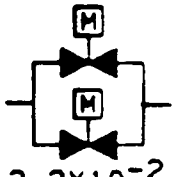 3.2×10^{-2}	$P_7 = 1 \times 10^{-3}$
8	REFER TO THE HPIS BLOCK DIAGRAM THIS BLOCK REPRESENTS THE HIGH PRESSURE INJECTION SYSTEM LESS THE SUCTION LINE (BLOCK 1) ON THE HPIS BLOCK DIAGRAM	$P_8 = 3 \times 10^{-3}$
9, 10	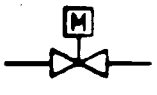	P_9, $P_{10} = 1.3 \times 10^{-3}$

HPRS BLOCK DIAGRAM

HPRS FAILURE COMBINATIONS

COMBINATION OF BLOCKS	PROBABILITY FORMULATION	RESULT: CSRS ALSO FAILS	RESULT: CSRS DOES NOT FAIL
7	1(-3)	-	1×10^{-3}
8	HPIS(3.6×10^{-3}) LESS SUCTION LINE CONTRIBUTION(6.5×10^{-4})	-	3×10^{-3}
1 AND 6	6.4(-2) X 1(-3)	6.4×10^{-5}	-
TRIPLES	-	ϵ	ϵ
	P(HPRS AND CSRS) =	6.4×10^{-5}	
	P(HPRS) =		4×10^{-3}

2.2.3.6 Interfacing Check Valves

The basic piping arrangement between the LPIS/LPRS and the Reactor Coolant System is sketched on the following page. As can be seen, the 600 psi and 2500 psi piping are separated by two check valves and a remotely operated valve (in this case motor operated). The system sketched on page V-58 of WASH-1400 is similar. An important difference is that much of the 600 psi piping in Indian Point-3 is inside containment; in the WASH-1400 system the interface between 2500 psi and 600 psi piping is outside containment. Further, in Indian Point-3 there is a check valve in the 600 psi piping inside containment just prior to the containment penetration. For these reasons, it is most likely that a double check valve failure will result in rupture of 600 psi piping inside containment with blowdown also inside containment. It is judged that the conditional probability of rupture and blowdown outside containment given check valve failure is no greater than 0.1.

Check valve testing is another important difference from WASH-1400. Indian Point-3 has test connections which permit verification of both check valves in the line to each loop. These valves are presently tested at nine month intervals, but not necessarily at each RCS repressurization. The check valve failure probability calculation follows.

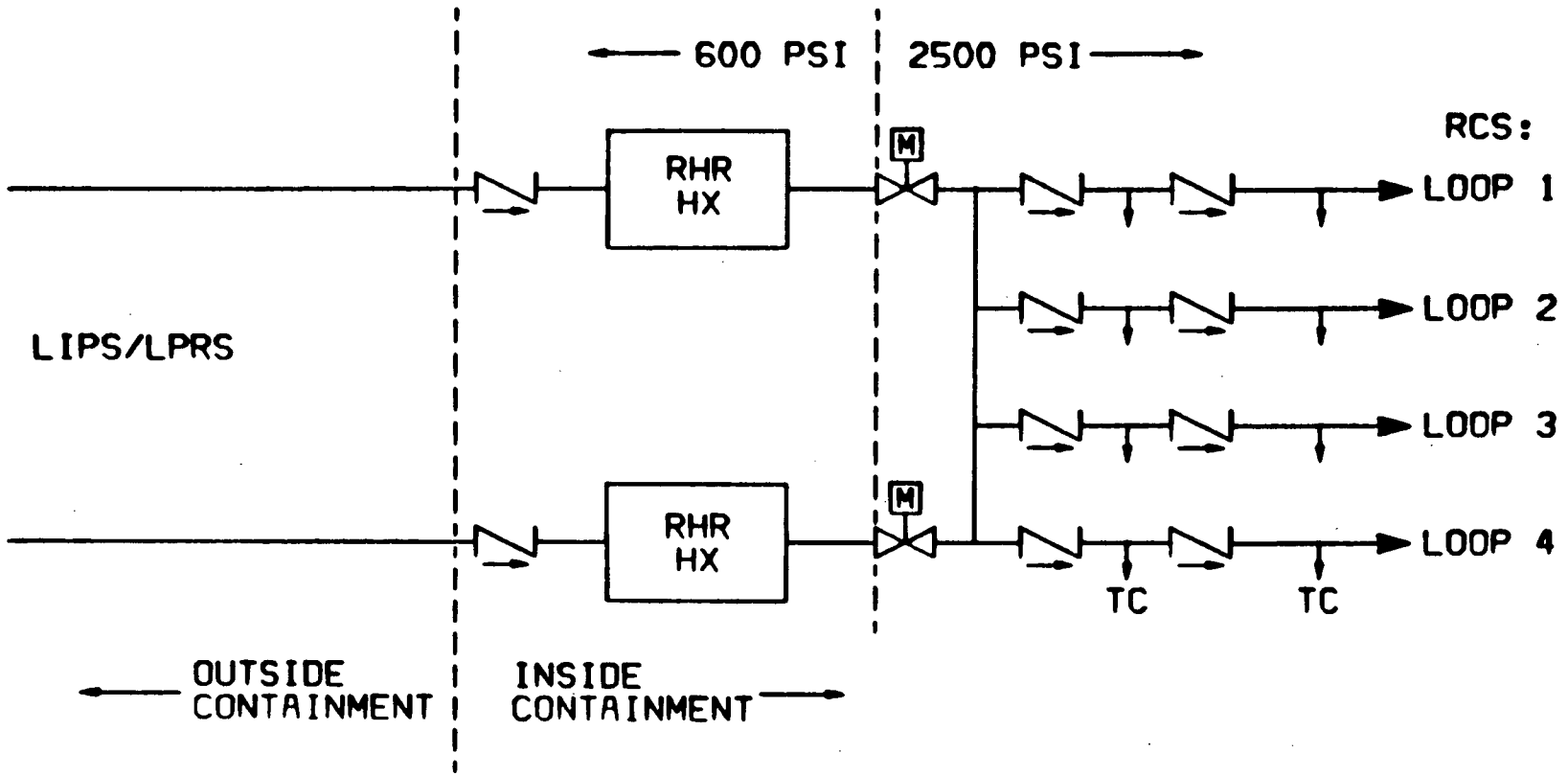

DIAGRAM OF INTERFACING CHECK VALVES

INTERFACING CHECK VALVE FAILURE PROBABILITY CALCULATION

The following calculation is based on the model and failure rates given in WASH-1400, Appendix V, Section 4.4, pp. V-43 and V-44.

Q_o = Failure of one check valve pair, one ordered double $= 1/2\,\lambda_R \lambda_L t^2$

Q_1 = Failure of one check valve pair, two ordered doubles $= 2Q_o$

Q = Failure of any one of four check valve pairs $= 4Q_1$

V = Failure of any one of four check valve pairs with blowdown outside containment $= 0.1Q$

λ_L = Failure rate from gross leakage = 2.6×10^{-3}/yr

λ_R = failure rate from internal rupture = 8.8×10^{-5}/yr

t = test interval = 9 mos = .75 yr.

$$p(V) = 0.4(2.6 \times 10^{-3})(8.8 \times 10^{-5})(.75)^2 = \underline{5.2 \times 10^{-8}}$$

2.2.3.7 Auxiliary Feedwater System (AFWS)

The Indian Point AFWS is similar to the WASH-1400 system in that each consists basically of two motor-driven pumps and one turbine-driven pump, each capable of supplying the required feedwater flow. There are, however, significant differences in piping layout. The AFWS flow diagram and unavailability calculation follow.

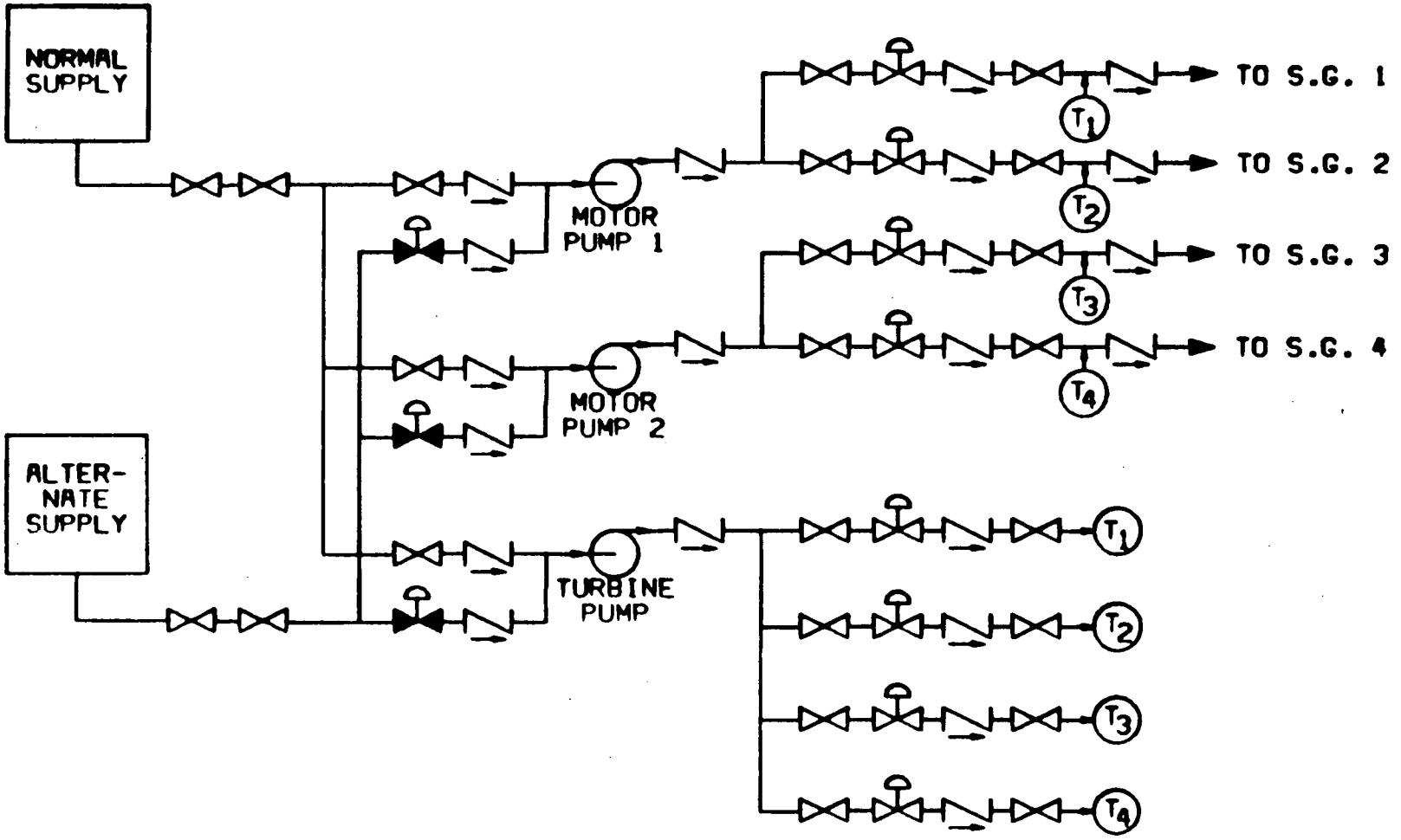

AFWS FLOW DIAGRAM

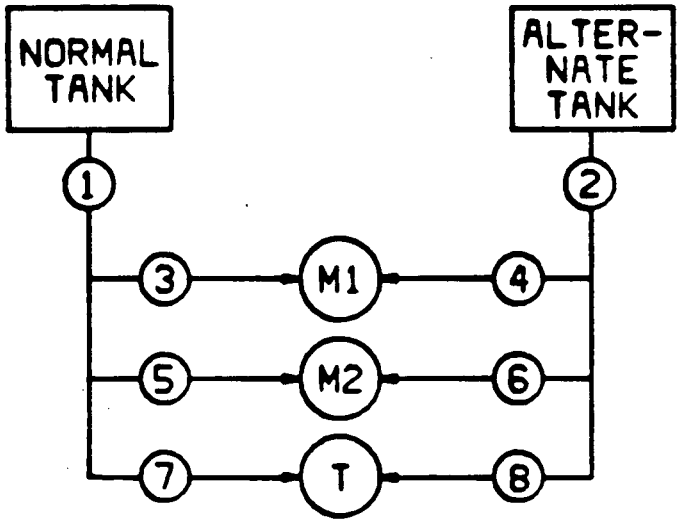

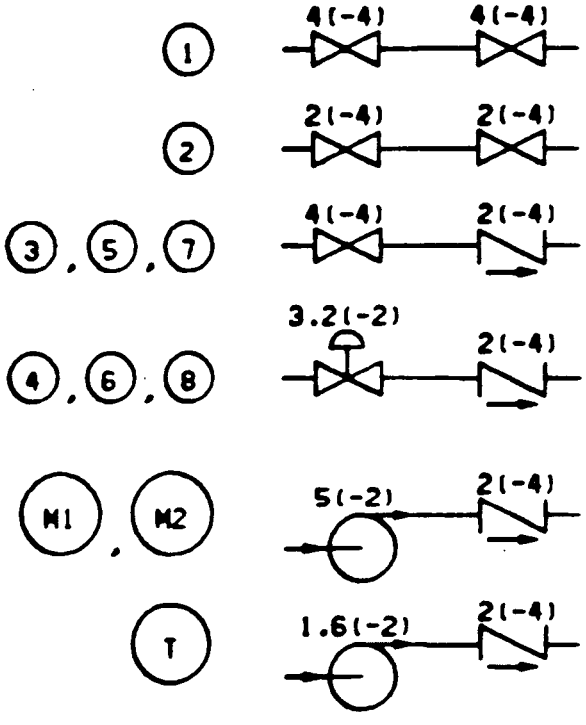

$P_{1} = 8 \times 10^{-4}$

$P_{2} = 4 \times 10^{-4}$

$P_{3} = P_{5} = P_{7} = 6 \times 10^{-4}$

$P_{4} = P_{6} = P_{8} = 3.2 \times 10^{-2}$

$P_{M1} = P_{M2} = 5 \times 10^{-2}$

$P_{T} = 1.6 \times 10^{-2}$

AFWS BLOCK DIAGRAM
PUMPS AND SUCTION PIPING

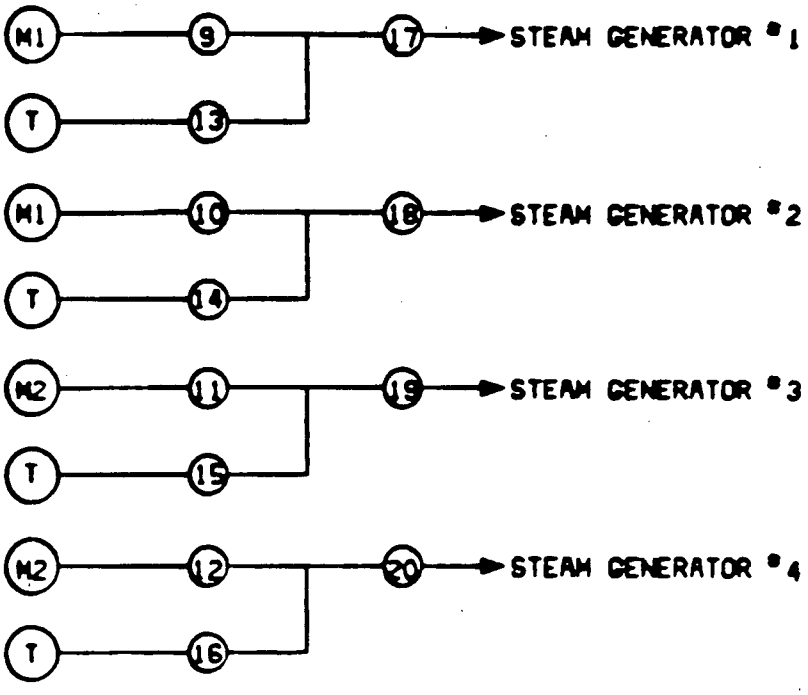

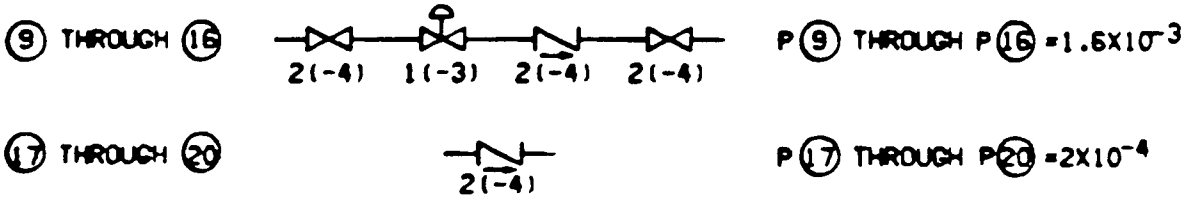

AFWS BLOCK DIAGRAM
PUMP DISCHARGE HEADERS

AFWS FAILURE COMBINATIONS

COMBINATION OF BLOCKS	PROBABILITY CALCULATION	RESULT: AC POWER AVAILABLE	RESULT: NO AC POWER
(1) AND (2)	4(-4) X 8(-4)	3.2×10^{-7}	3.2×10^{-7}
(M1) AND (M2) AND (T)	5(-2) X 5(-2) X 1.6(-2)	4×10^{-5}	–
	1 X 1 X 1.6(-2)	–	1.6×10^{-2}
(M1) AND (T) AND [(11) OR (12) OR (19) OR (20)]	5(-2) X 1.6(-2) X [1.6(-3) + 1.6(-3) + 2(-4) + 2(-4)]	2.9×10^{-6}	–
	1 X 1.6(-2) X [1.6(-3) + 1.6(-3) + 2(-4) + 2(-4)]	–	ϵ
(M2) AND (T) AND [(9) OR (10) OR (17) OR (18)]	5(-2) X 1.6(-2) X [1.6(-3) + 1.6(-3) + 2(-4) + 2(-4)]	2.9×10^{-6}	–
	1 X 1.6(-2) X [1.6(-3) + 1.6(-3) + 2(-4) + 2(-4)]	–	ϵ
	P(AFWS) = P(L)	4.6×10^{-5}	1.6×10^{-2}

2.2.3.8 Onsite AC Power System

There are substantial differences between Indian Point and the system in WASH-1400. At Indian Point there are three diesel generators for each unit. Each diesel generator can be closed in on its normal bus and on any of the other two diesel generator buses which may be deenergized. In addition, there are three gas turbines at the site,, which belong to Consolidated Edison and are technically a part of Unit 2. Nonetheless, any of these turbines can supply emergnecy AC power to either Indian Point Unit 2 or 3. The total unavailability of onsite AC power is estimated as follows:

<u>Failure of Diesel Generators</u>

Independent failure of all 3 diesel generators, $p(3) = (5.7 \times 10^{-2})^3$	1.9×10^{-4}	(See Appendix A)
Probability of an assumed Common Mode affecting diesel generators	1×10^{-4}	(See Appendix A)
P(3/3) diesel generators)	2.9×10^{-4}	

Failure of Gas Turbines

CONDITION	PROBABILITY FORMULATION	RESULT
None in Maintenance and three fail to start	$(0.7)^3 \times (0.1)^3$	3.4×10^{-4}
One in Maintenance and two fail to start	$3(.3)\ (.7^2) \times (3)\ (.1)^2\ (.9)$	1.2×10^{-2}
Two in Maintenance and one fails to start	$3(.3)^2 (.7) \times (3)\ (.1)\ (.9)^2$	4.6×10^{-2}
Three in Maintenance	$(0.3)^3$	2.7×10^{-2}
p(3/3) gas turbines)		8.5×10^{-2}

p(onsite AC) = p(diesels) X (gasturbines)= 2.5×10^{-5}

3.0 CONSEQUENCE EVALUATIONS AND RISK ESTIMATES

The approach and methodology developed in WASH-1400 have been employed for evaluating core melt consequences via air pathways for the Indian Point plants. For each of the core melt accident sequences, there are a number of possible containment failure modes which, if they occur, can lead to significant release of radioactivity to the environment. In WASH-1400, five containment failure modes were considered and they were similarly employed here. These failure modes are: 1) in vessel steam explosion generating a missile and failing containment (Designated α),2) failure of containment isolation (Designated β) 3) overpressure failure resulting from relatively rapid hydrogen combustion (designated γ), 4) overpressure failure resulting from accumulation of steam and/or non-condensible gases (designated δ), and 5) failure resulting from containment melt-through (designated ϵ).

For each combination of an accident sequence and containment failure mode, there will result a particular quantity of fission products released to the environment. The possible spectrum of fission product releases (for core melt events) was divided into 7 discrete release categories in WASH-1400 for the purpose of evaluating consequences via air pathways. Each combination of an accident sequence and containment failure mode was assigned to the most appropriate release category along with its estimated probability of occurrence. The probabilities of all entries in each category were then summed to estimate the total probability of occurrence of a release to the environment for a particular release category. The same approach has been taken in this study.

The computer code CRAC (described in WASH-1400) was used to calculate radiological consequences for the releases associated with each of the seven release categories. Indian Point meteorology data and population distributions were employed in the CRAC calculations.

Risk estimates presented at the end of this section are derived by multiplying the consequence and probability estimates for each of the release categories.

3.1 CONTAINMENT FAILURE MODE PROBABILITIES

Containment failure mode probabilities used in this study are based on WASH-1400 and are listed in Table 3-1. A brief discussion of the basis of failure mode probability values follows.

In-vessel Steam Explosion with Missile Generation (α)

In WASH-1400 the probability of an in-vessel steam explosion which creates sufficient forces to fail the reactor vessel head and propel it through the containment shell is estimated to be 10^{-2}. More recent studies at Argonne National Laboratory indicate that these events are far less probable than previously believed; two results are particularly important here: First, it has been found that an in-vessel steam explosion will not occur if the coolant system pressure is above approximately 150 psig. This same phenomenon has been observed by researchers at Sandia Laboratories. Second, it is virtually impossible for an in-vessel steam explosion to produce a coherent water slug capable of failing the reactor vessel head. Because of these findings, the probability of the Alpha failure mode has been reduced to 10^{-3} for the "A" Sequences (in which core melting takes place at low pressure) and to 10^{-4} for Sequences S_1, S_2, and TMLB (in which core melt takes place at elevated pressure). Another justifiable alternative would be to disregard the Alpha failure mode altogether.

Failure of Containment Isolation (β)

Values from WASH-1400 have been employed in this study

Overpressure Failures (both γ and δ)

Values for overpressure failure were not specifically identified in WASH-1400 for most of the dominant sequences. Based on judgement and preliminary calculations, the probability of containment failure from overpressure is estimated to be 0.1 for the A, S_1 and S_2 sequences. Further calculations will provide the basis for more definitive estimates. For the TMLB sequences the gamma and delta failure mode probabilities are taken from WASH-1400.

Melt-Through Failures (ϵ)

In WASH-1400 the probability of containment failure by base mat melt-through was assigned the residual probability after other failure mode probabilities were subtracted from 1.0. Thus it was assumed that the containment boundary would always be violated in a core melt accident, if only by base mat melt-through. There is reason to believe that this assumption is overly conservative. For all pipe break sequences a considerable volume of water will find its way to the cavity beneath the reactor vessel before and/or after vessel melt-through. In the Indian Point plants, containment heat removal remains available for all of the dominant pipe break sequences. Thus, it is likely that a refluxing action will take place resulting in cooling of the core debris. Because of this possible mechanism, results have been compiled for two different assumptions regarding the probability of the epsilon failure mode. Case 1 employs the WASH-1400 assumption (described above), while in Case 2 it is assumed that the probability of an epsilon failure is 10^{-2} for the pipe break sequences.

3.2 ASSIGNMENT OF ACCIDENT SEQUENCE - CONTAINMENT FAILURE MODE COMBINATIONS TO RELEASE CATEGORIES

In this study, each accident sequence - containment failure mode combination is assigned to a release category using the same general approach as used in WASH-1400. The bases for these asignments and differences from WASH-1400 are discussed below.

Release Category 1.

Sequences in which containment failure results from steam explosion and in which containment fission product removal systems are not functioning are placed in category 1. The CRAC Code treats two types of Category 1 releases. Subcategory 1a is characteristic of events which occur with reduced containment pressure. Subcategory 1b is characteristic of events which occur with the containment at high pressure. In this study, S_1HF, S_2HF and TMLBB' sequences have been assigned to Category 1b. Sequence AHF was assigned to Category 1a on the basis that containment pressure will have been reduced by spray injection. The AHF sequence is assumed to occur relatively soon after loss of spray recirculation.

Release Category 2

Sequences in which containment failure results from overpressure (either γ or δ) and in which containment fission product removal systems are not functioning are placed in Category 2 in WASH-1400. The same categorization has been used in this study. Thus HF accident sequences with γ or δ failure modes are placed in Category 2. The V Sequence (failure of interfacing check valves) was also placed in Category 2.

Release Category 3

Sequences in which containment failure results from steam explosion and in which containment fission product removal systems are functioning are placed in Category 3, as they were in WASH-1400. Sequence TMLBB" (with the alpha failure mode) is assigned to Category 3 because restoration of AC power provides fission product removal capability.

Release Category 4

Release Category 4 has not been utilized in this study. In WASH-1400, the principal sequences in this category involved failure of containment isolation and fission product removal systems. Such sequences were not dominant contributors in either this study or in WASH-1400.

Release Category 5

Sequences in which containment failure results from overpressure and in which containment fission product removal systems are functioning are placed in category 5. This category assignment is similar to that employed for this same type of sequence in a recent study of an ice condenser PWR.

Release Category 6

Sequences in which containment failure results from melt-through and in which containment fission product removal systems are not functioning are placed in this category. This category assignment is the same as employed in WASH-1400.

Release Category 7

Combinations in which containment failure results from melt-thru and in which containment fission product removal systems are functioning are placed in this category. This category assignment is the same as employed in WASH-1400.

3.3 CONSEQUENCE CALCULATION

Long-term consequences for each release category were calculated employing the CRAC computer code developed for the Reactor Safety Study. Core fission product inventories in the CRAC code for the WASH-1400 PWR were retained and are considered adequate for this study.

Consequence calculations are based on site demographic data extrapolated to the year 2010 and on seasonal frequency distributions of wind speed and direction for the last half of 1978 and first half of 1979. Assuming no evacuation, consequence calculations were performed for latent cancers and man-rem out to a radius of 50 miles. Calculated consequences are presented in Table 3-2.

3.4 RISK ESTIMATES

Risk is calculated as the product of probability and consequence. Risk has been calculated for Unit 2 and Unit 3 for each release category. Two cases are considered for each unit: In Case 1, the probability of containment failure by base-mat melt-through (ϵ) is calculated by subtracing from 1.0 the sum of the other failure mode probabilities. In Case 2, the probability of the epsilon failure mode is estimated to be 10^{-2} for the A, S_1 and S_2 sequences. For the TMLB sequences, Case 2 is the same as Case 1. Results are given in Tables 3-3A, 3-3B, 3-4A and 3-4B (in these tables, risk is expressed in terms of man-rem exposure). Table 3-5 displays probability and risk for each plant for both man-rem and latent cancers (Table 3-5 employs Case 1 assumptions relative to the epsilon containment failure mode). A separate report presents estimates of the risk based on short-term health effects.

4.0 CONCLUSIONS

In each plant the risk from core melt accident derives mainly from accident sequences which culminate in either a category 2 or category 5 release. These two release categories in fact account for about 90% of the total estimated accident risk. Within each of these release categories, the probability of occurrence is comprised almost entirely of pipe break accident sequences which involve containment overpressure failure.

TABLE 3-1
CONTAINMENT FAILURE MODE PROBABILITIES
AND RELEASE CATEGORIES FOR THE
DOMINANT ACCIDENT SEQUENCES

SEQUENCE	CONTAINMENT FAILURE PROBABILITY AND (RELEASE CATEGORY)					
	α	β	γ	δ	ϵ (NOTE 1)	
					CASE 1	CASE 2
AD	10^{-3}(3)	2×10^{-3}(5)	0.1(5)	0	0.9(7)	.01(7)
AH	10^{-3}(3)	3×10^{-3}(5)	0.1(5)	0	0.9(7)	.01(7)
AHF	10^{-3}(1)	3×10^{-3}(5)	0.1(2)	0	0.9(6)	.01(6)
S_1D	10^{-4}(3)	2×10^{-3}(5)	0.1(5)	0	0.9(7)	.01(7)
S_1H	10^{-4}(3)	1.67×10^{-3}(5)	0.1(5)	0	0.9(7)	.01(7)
S_1HF	10^{-4}(1)	1.67×10^{-3}(5)	0.1(2)	0	0.9(6)	.01(6)
S_2D	10^{-4}(3)	2.2×10^{-3}(5)	0.1(5)	0	0.9(7)	.01(7)
S_2H	10^{-4}(3)	1.67×10^{-3}(5)	0.1(5)	0	0.9(7)	.01(7)
S_2HF	10^{-4}(1)	1.67×10^{-3}(5)	0.1(2)	0	0.9(6)	.01(6)
V						
TMLBB"	10^{-4}(3)		.24(5)	0	.76(7)	.76(7)
TMLBB'	10^{-4}(1)		.24(2)	.56(2)	.2 (6)	.2 (6)

Note (1)

Case 1: $P(\epsilon) = 1 - \sum P(\text{Others})$

Case 2: $P(\epsilon) = .01$, except for TMLB sequences. For TMLB sequences, P(E) is the same as in Case 1.

TABLE 3-2

LONG-TERM CONSEQUENCE ESTIMATE

BY RELEASE CATEGORY FOR INDIAN POINT

CONSEQUENCE \ RELEASE CATEGORY	1a	1b	2	3	5	6	7
MAN-REM	4.8(7)	2.1(7)	2.9(7)	3.0(7)	2.9(6)	2.7(5)	4.4(3)
LATENT CANCERS	4.5(4)	1.7(4)	2.7(4)	1.7(4)	1.8(3)	9.1(1)	2.0

TABLE 3-3A

PROBABILITY AND RISK ESTIMATES SUMMARY FOR INDIAN POINT UNIT 2 (CASE 1)[1]

Sequence \ Release Category	1	2	3	4	5	6	7
AD			6.4(-10)α		1.3(- 9)β 6.4(- 8)γ		5.8(- 7)ε
AH			1.1(-10)α		3.3(-10)β 1.1(- 8)γ		1.0(- 7)ε
AHF	3.0(-10)α	3.0(- 8)γ			9.0(-10)β	2.7(- 7)ε	
S_1D			1.8(-10)α		3.6(- 9)β 1.8(- 7)γ		1.6(- 6)ε
S_1H			1.2(-10)α		2.0(- 9)β 1.2(- 7)γ		1.1(- 6)ε
S_1HF	1.1(-11)α	1.1(- 8)γ			1.8(-10)β	1.0(- 7)ε	
S_2D			4.7(-10)α		1.0(- 8)β 4.7(- 7)γ		4.2(- 6)ε
S_2H			4.0(-10)α		6.7(- 9)β 4.0(- 7)γ		3.6(- 6)ε
S_2HF	3.7(-11)α	3.7(- 8)γ			6.2(-10)β	3.3(- 7)ε	
V		2.8(-10)					
TMLBB"			8.0(-13)α		1.9(- 9)γ		6.1(- 9)ε
TMLBB'	8.0(-13)α	4.5(- 9)δ 1.9(- 9)γ				1.6(- 9)ε	
Total Category Probability	3.5(-10)	8.5(- 8)	1.9(- 9)		1.3(- 6)	7.0(- 7)	1.1(- 5)
Consequence of Category (Man Rem)	4.4(7)	2.9(7)	3.0(7)		2.9(6)	2.7(5)	4.4(3)
Risk from Category Σ=6.6	.015	2.5	.06		3.8	.19	.05

(1) In Case 1 it is assumed that p(ε) = 1 - Σp (other modes)

TABLE 3-3B

PROBABILITY AND RISK SUMMARY FOR INDIAN POINT UNIT 2 (CASE 2) (1)

Sequence \ Release Category	1	2	3	4	5	6	7
AD			6.4(-10)α		1.3(- 9)β 6.4(- 8)γ		6.4(- 9)ε
AH			1.1(-10)α		3.3(-10)β 1.1(- 8)γ		1.1(- 9)ε
AHF	3.0(-10)α	3.0(- 8)γ			9.0(-10)β	3.0(- 9)ε	
S_1D			1.8(-10)α		3.6(- 9)β 1.8(- 7)γ		1.8(- 8)ε
S_1H			1.2(-10)α		2.0(- 9)β 1.2(- 7)γ		1.2(- 8)ε
S_1HF	1.1(-11)α	1.1(- 8)γ			1.8(-10)β	1.1(- 9)ε	
S_2D			4.7(-10)α		1.0(- 8)β 4.7(- 7)γ		4.7(- 8)ε
S_2H			4.0(-10)α		6.7(- 9)β 4.0(- 7)γ		4.0(- 8)ε
S_2HF	3.7(-11)α	3.7(- 8)γ			6.2(-10)β	3.7(- 9)ε	
V		2.8(-10)					
TMLBB"			8.0(-13)α		1.9(- 9)γ		6.1(- 9)ε
TMLBB'	8.0(-13)α	4.5(- 9)δ 1.9(- 9)γ				1.6(- 9)ε	
Total Category Probability	3.5(-10)	8.5(- 8)	1.9(- 9)		1.3(- 6)	9.4(- 9)	1.3(- 7)
Consequence of Category (Man Rem)	4.4(7)	2.9(7)	3.0(7)		2.9(6)	2.7(5)	4.4(3)
Risk from Category Σ= 6.4	.015	2.5	.057		3.8	2.5(- 3)	5.7(- 4)

(1) In Case 2 it is assumed that p(ε) = 0.01, except for TMLB sequences. For TMLB sequences p(ε) is the same as in Case 1.

TABLE 3-4A

PROBABILITY AND RISK ESTIMATES SUMMARY FOR INDIAN POINT UNIT 3 (CASE 1)

Sequence \ Release Category	1	2	3	4	5	6	7
AD			5.4(-10)α		1.1(- 9)β 5.4(- 8)γ		4.9(- 7)ϵ
AH			1.6(-12)α		4.8(-12)β 1.6(-10)γ		1.4(- 9)ϵ
AHF	3.0(-10)α	3.0(- 8)γ			9.0(-10)β	2.7(- 7)ϵ	
S_1D			1.4(-10)α		2.8(- 9)β 1.4(- 7)γ		1.3(- 6)ϵ
S_1H			1.2(-10)α		2.0(- 9)β 1.2(- 7)γ		1.1(- 6)ϵ
S_1HF	1.1(-11)α	1.1(- 8)γ			1.8(-10)β	1.0(- 7)ϵ	
S_2D			3.6(-10)α		7.9(- 9)β 3.6(- 7)γ		3.2(- 6)ϵ
S_2H			4.0(-10)α		6.7(- 9)β 4.0(- 7)γ		3.6(- 6)ϵ
S_2HF	3.6(-11)α	3.6(- 8)γ			6.0(-10)β	3.2(- 7)ϵ	
V		5.2(- 8)					
TMLBB"			8.0(-13)α		1.9(- 9)γ		6.1(- 9)ϵ
TMLBB'	8.0(-13)α	1.9(- 9)γ 4.5(- 9)δ				1.6(- 9)ϵ	
Total Category Probability	3.5(-10)	1.4(- 7)	1.6(- 9)		1.1(- 6)	6.9(- 7)	9.7(- 6)
Consequence of Category (Man Rem)	4.4(7)	2.9(7)	3.0(7)		2.9(6)	2.7(5)	4.4(3)
Risk from Category Σ=7.6	1.5(- 2)	4.1	4.8(- 2)		3.2	1.9(- 1)	4.3(- 2)

(1) In Case 1 it is assumed that $p(\epsilon) = 1 - \Sigma p$ (other modes)

TABLE 3-4B

PROBABILITY AND RISK SUMMARY FOR INDIAN POINT UNIT 3 (CASE 2) (1)

Sequence \ Release Category	1	2	3	4	5	6	7
AD			5.4(-10)α		1.1(- 9)β 5.4(- 8)γ		5.4(- 9)ϵ
AH			1.6(-12)α		4.8(-12)β 1.6(-10)γ		1.6(-11)ϵ
AHF	3.0(-10)α	3.0(- 8)γ			9.0(-10)β	3.0(- 9)ϵ	
S_1D			1.4(-10)α		2.8(- 9)β 1.4(- 7)γ		1.4(- 8)ϵ
S_1H			1.2(-10)α		2.0(- 9)β 1.2(- 7)γ		1.2(- 8)ϵ
S_1HF	1.1(-11)α	1.1(- 8)γ			1.8(-10)β	1.1(- 9)ϵ	
S_2D			3.6(-10)α		7.9(- 9)β 3.6(- 7)γ		3.6(- 8)ϵ
S_2H			4.0(-10)α		6.7(- 9)β 4.0(- 7)γ		4.0(- 8)ϵ
S_2HF	3.6(-11)α	3.6(- 8)γ			6.0(-10)β	3.6(- 9)ϵ	
V		5.2(- 8)					
TMLBB''			8.0(-13)α		1.9(- 9)γ		6.1(- 9)ϵ
TMLBB'	8.0(-13)α	1.9(- 9)γ 4.5(- 9)δ				1.6(- 9)ϵ	
Total Category Probability	3.5(-10)	1.4(- 7)	1.6(- 9)		1.1(- 6)	9.3(- 9)	1.1(- 7)
Consequence of Category (Man Rem)	4.4(7)	2.9(7)	3.0(7)		2.9(6)	2.7(5)	4.4(3)
Risk from Category Σ=7.4	1.5(- 2)	4.1	4.8(- 2)		3.2	2.5(- 3)	4.8(- 4)

(1) In Case 2 it is assumed that p(ϵ) = 0.01, except for TMLB sequences. For TMLB sequences p(ϵ) is the same as in Case 1.

TABLE 3-5
SUMMARY OF RISK BY RELEASE CATEGORY
FOR LONG-TERM HEALTH EFFECTS[1]

RELEASE CATEGORY	MAN-REM/YR.		LATENT CANCERS/YR.	
	UNIT 2	UNIT 3	UNIT 2	UNIT 3
1a	1.4(-2)	1.4(-2)	1.4(-5)	1.4(-5)
1b	1.1(-3)	1.0(-3)	8.5(-7)	8.2(-7)
2	2.5	4.1	2.3(-3)	3.8(-3)
3	5.7(-2)	4.8(-2)	3.2(-5)	2.7(-5)
5	3.8	3.2	2.3(-3)	2.0(-3)
6	1.9(-1)	1.9(-1)	6.4(-5)	6.3(-5)
7	4.8(-2)	4.3(-2)	2.2(-5)	1.9(-5)
SUM OF CAT. 1-7	6.6	7.6	4.7(-3)	5.9(-3)

(1) Computed for Case 1 (See Section 3.4 for definition).

APPENDIX A: COMPONENT FAILURE DATA AND SOURCES

A.1 VALVE FAILURE DATA

A.1.1 MOTOR-OPERATED VALVES WHICH MUST CHANGE POSITION

EXAMPLE: MOV-1860A (A05), WASH-1400 p. II-325 and p. II-329

EMVA005X	OPERATOR ERROR	ϵ
EMVA005F	VLV FAILS TO OPERATE	1×10^{-3}
EST860AC	CONTROLS FAIL	3×10^{-2}
ECB860A0	CIRCUIT BKR. FAILS	1×10^{-3}
JH00	NO POWER ON BUS	4×10^{-5}
TOTAL		3.2×10^{-2}

A.1.2 MOTOR-OPERATED VALVES WHICH NEED NOT CHANGE POSITION

EXAMPLE: MOV-1890C, WASH-1400, p. II-329 and p. II-327

EMV890CX	OPERATOR INADVERTANTLY SHUTS	1×10^{-3}
EMV0001C	VLV. FAILS CLOSED	1×10^{-4}
EST890CC	CONTROL CIRCUIT FAILS	2.2×10^{-4}
TOTAL		1.3×10^{-3}

A.1.3 MOTOR-OPERATED VALVES WHICH ARE NORMALLY IN THE CORRECT POSITION WITH CONTROL POWER DEFUSED AND POSITION DISPLAYED IN THE CONTROL ROOM

ASSUME 5×10^{-5} WHICH IS 1 DECADE BELOW THE PROBABILITY OF A MANUAL VALVE BEING IN THE WRONG POSITION

A.1.4 MANUAL VALVES POSITIONED INCORRECTLY

EXAMPLE: VALVE A03, WASH-1400, p. II-329 and p. II-325

EXVA003X	OPERATOR ERROR	3×10^{-4}
EXVA003C	VLV. FAILS TO REMAIN OPEN	1×10^{-4}
TOTAL		4×10^{-4}

A.1.5 MANUAL VALVES WHICH ARE LOCKED IN THE CORRECT POSITION AND VERIFIED BY PERIODIC INSPECTION.

ASSUME 2×10^{-4}, WHICH IS 1/2 OF THE GENERAL CASE FOR A MANUAL VALVE

A.1.6 CHECK VALVES

EXAMPLE: VALVE B02, WASH-1400, p. II-329 and p. II-325

ECV0B02C	VLV. FAILS TO OPEN	1×10^{-4}
ECV0B02F	VLV. FAILS TO REMAIN OPEN	1×10^{-4}
TOTAL		2×10^{-4}

A.2 PUMP FAILURE DATA

A.2.1 RHR/RECIRC PUMPS

FROM WASH-1400, p. II-325 and II-239:

EST0B01C	CONTROL SYSTEM FAILS	1.8×10^{-3}
EPM0B01A	PUMP FAILURE	1×10^{-3}
EPM0B01F	PUMP FAILS TO CONTINUE RUNNING	7.2×10^{-4}
JC00	POWER IN BUS	4.1×10^{-5}
JJ00	CONTROL POWER FAILS	1.1×10^{-6}
	TOTAL	3.5×10^{-3}

A.2.2 SAFETY INJECTION PUMPS

FROM WASH-1400, p. II-300, P(2/3) HPIS PUMPS = 2.7×10^{-3}

Convert to a single pump probability as follows:

$$P(2/3) = 3P(1/3)^2$$

$$P(1/3) = 1/3\ P(2/3) = \sqrt{\frac{2.7}{3} \times 10^{-3}} = \underline{3 \times 10^{-2}}$$

A.2.3 MOTOR-DRIVEN AUXILIARY FEEDWATER PUMP

FROM WASH-1400, p. II-209:

FAIL TO START	1×10^{-3}
FAIL AFTER START	2.4×10^{-4}
CONTROL CIRCUIT FAILS	3.7×10^{-3}
TEST & MAINTENANCE	7.9×10^{-3}
LOSS OF BUS POWER (From Table II-5-12, p.II 5-5)	3.7×10^{-2}
TOTAL	5×10^{-2}

A.2.4 TURBINE-DRIVEN AUXILIARY FEEDWATER PUMP

FROM WASH-1400, TABLE II-5-9:

PPMTURBF, TURBINE FAILS	1×10^{-3}
PSTTBCNT, NO STEAM TO TURBINE	1×10^{-3}
MAINTENANCE ON STEAM VALVE	5.8×10^{-3}
PUMP TEST & MAINTENANCE	7.9×10^{-3}
TOTAL	1.6×10^{-2}

A.3 BORON INJECTION TANK

FROM WASH-1400, APP. II, pp. II-298, II-299:

HIGH BORON CONCENTRATION NOT DETECTED BY SAMPLING	1×10^{-4}
INLET MOVS FAIL TO OPEN	6.8×10^{-4}
OUTLET MOVS FAIL TO OPEN	6.8×10^{-4}
BIT HEAT TRACING FAILS AND IS NOT DETECTED	5×10^{-4}
BIT HEATERS FAIL AND ARE NOT DETECTED	2.6×10^{-4}
NO FLOW THROUGH BIT	2.2×10^{-3}

A.4 ONSITE AC POWER SYSTEM FAILURE DATA

A.4.1 DIESEL GENERATORS

The independent failure probability of one diesel generator is approximated as resulting from (1) the failure of a diesel to start or (2) the failure of a diesel to continue running or (3) the failure of circuit breakers or (4) the non-availability of the diesel because of maintenance. Based on AEC Report OOE-ES-002, "Diesel Generator Operating Experience at Nuclear Power Plants," a probability of failure per diesel per demand of 0.05 was assigned to the combined occurrence of events (1) and (2) above. An estimate of the combined occurrence probability of events (3) and (4) was obtained from WASH-1400, Table II 5-3 (p. II-204). This contribution is 7.2×10^{-3}. The independent failure probability of one emergency power train is therefore estimated to be the sum, or 0.057.

A very important contributor in WASH-1400 to the loss of onsite AC Power probability is the common mode failure of power buses (designated event JA00-JB00). This event is assigned a probability of 0.01 (Table II 5-5) based on an argument appearing in WASH-1400, Appendix II, Paragraph 5.1.5.3.5 and further discussed in WASH-1400, Appendix III, Section 6.3. It is concluded in these sections that tripping of all diesel generators because of inrush current (a normal loading condition) is the dominant common mode with a probability of 0.01. This assessment is insupportable because in a properly sized diesel power system, tripping during load application (should it occur) would be an independent event among the independent diesel generators. This failure mode (tripping on inrush current) is therefore treated as an independent event in this study.

The occurrence of common mode failure among the emergency power trains is judged to be of low probability (on the order of 10^{-4}) because the only significant contributor discussed and quantified in WASH-1400 (tripping on inrush current) is considered to be independent and not common mode. Likewise, many of the failures listed in WASH-1400, Appendix II, Paragraph 5.1.5.3.5 are not strictly common mode. For example, failure of a fuel rack to spring return to the open position after manual trip or closure of a manual valve in one of the engine air start systems. These will not cause multiple power failures unless they are repeated on independent systems. Lightning, fire, and exhaust gas recirculation are possible common modes but of low probability.

A.4.2 GAS TURBINES

THE FOLLOWING DATA IS ASSUMED:

FAILURE TO START	1×10^{-1}
UNAVAILABILITY DUE TO MAINTENANCE	3×10^{-1}
TOTAL GAS TURBINE UNAVAILABILITY =	4×10^{-1}

APPENDIX B: SYMBOLOGY

System Identification Symbol	System	System Failure Symbol
CSRS	Containment Spray Recirculation System	F
ECI(S)	Emergency Coolant Injection (System)	D
ECR(S)	Emergency Coolant Recirculation (System)	H
AFWS	Auxiliary Feedwater System	L
LPRS	Low Pressure Recirculation System	
HPIS	High Pressure Injection System	
LPIS	Low Pressure Injection System	
ACCS	Accumulator System	
RCS	Reactor Coolant System	
RHR	Residual Heat Removal System	
HPRS	High pressure recirculation system	
RWST	Refueling water storage tank	

APPENDIX B: SYMBOLOGY

System Identification Symbol	System	System Failure Symbol
CSRS	Containment Spray Recirculation System	F
ECI(S)	Emergency Coolant Injection (System)	D
ECR(S)	Emergency Coolant Recirculation (System)	H
AFWS	Auxiliary Feedwater System	L
LPRS	Low Pressure Recirculation System	
HPIS	High Pressure Injection System	
LPIS	Low Pressure Injection System	
ACCS	Accumulator System	
RCS	Reactor Coolant System	
RHR	Residual Heat Removal System	
HPRS	High pressure recirculation system	
RWST	Refueling water storage tank	

SYMBOLOGY

Initiating Events	Symbol
Large pipe break (6")	A
Small pipe break (2"-6")	S_1
Small pipe break (1/2"-2")	S_2
Interfacing check valve failure (To LPIS/LPRS) with blowdown outside containment	V
Transient (Loss of offsite AC power)	T

Loss of AC Power Events	Symbol
Non-recovery of off-site power for about 1 hr	M
Loss of Onsite AC power for about 1 hr.	B
Non-recovery of any AC power for about 3 hrs.	B'
Successful recovery of some AC power within 3 hrs.	B"

Containment Failure Modes	Symbol
Steam explosion in Reactor Vessel	α
Isolation leakage	β
Overpressure from Hydrogen burning	γ
Overpressure - generally (less hydrogen)	δ
Containment melt-through	ϵ

APPENDIX C: VARIATIONS IN KEY PROBABILISTIC ASSUMPTIONS FROM THOSE USED IN WASH-1400

As a result of information generated since the release of the Reactor Safety Study (WASH-1400) some failure probabilities used in this study are different from those utilized in WASH-1400. In this appendix these changes are discussed and their use justified.

C.1 Containment Failure Due to Steam Explosion

The probability of containment failure due to steam explosion was reduced from the 10^{-2} value used in WASH-1400 to 10^{-3} for the large break sequences and 10^{-4} for all other sequences. The rationale for these reductions is discussed in Section 3.1.

C.2 Operator Error Probabilities

The operator errors identified in WASH-1400 and the associated probabilities were utilized in this study, with the following exceptions:

(a) The probability for operator error during the shift from the ECCS injection mode to the recirculation mode was reduced by a factor of ten (from 3×10^{-3} to 3×10^{-4}) in the S_1HF and S_2HF sequences. This reduction takes credit for the presence of the Shift Technical Advisor in the control room and also recognizes that, for many potential operator errors, ample time and indications exist to justify credit for corrective actions.

(b) In WASH-1400 a 3×10^{-3} failure probability was assigned to the failure to shift from cold-leg to hot-leg injection at 24 hours into the accident in the AH, S_1H, and S_2H sequences. This failure mode was dropped in our analysis since a cold-leg to hot-leg shift is neither absolutely essential for the safe termination of the accident, nor is it imperative that it is performed precisely

24 hours after ECCS initiation. In addition, it can be argued that after 24 hours into the accident there will be a number of additional people in the control room, thus reducing drastically the probability of such an omission.

C.3 Interfacing Systems Check Valves Failure Probabilities

This study utilized the identical methodology as WASH-1400 in calculating the failure probabilities for the interfacing systems check valves (V sequence). The differences in overall failure probabilities resulted from (a) systems differences e.g., closed MOV's at Indian Point 2 and (b) periodic check valve testing (9 months for Indian Point 3 and 15 months for Indian Point 2). Check valve test connections are not provided in the WASH-1400 PWR.

C.4 Containment Failure Due to Overpressure

With the exception of the TMLB sequences for which the same gamma and delta probabilities as in WASH-1400 were used, all other sequences were assigned a combined containment overpressure failure probability of 0.1. This probability estimate resulted from containment pressure calculations for a broad spectrum of hydrogen production and combustion scenarios. This approach was taken because the probability of overpressure containment failure is not stated in WASH-1400 for several dominant accident sequences.

Evaluation of Residual Risks for the Indian Point Nuclear Plants

Executive Summary

The objective of these short-term studies, was to establish, within a short-term period of time, a reasonable estimate of residual risk for the Indian Point Nuclear Stations Units 2 and 3. In order to present a frame of reference for comparative purposes, these studies were generally based on the methodology and data for the Reactor Safety Study, WASH 1400.

In order to calculate residual risk, accidents beyond those specified in the NRC regulations must first be identified and their probabilities estimated. Consequences are estimated from the radiological characteristics of each accident sequence. Finally, probability and consequences are combined to arrive at risk.

In WASH 1400 many accident sequences were identified which possibly lead to core melt. Most of these sequences were of vanishingly low probability, and it was found that a small subset of accident sequences (called the dominant accident sequences) contributed nearly all of the total core melt probability. These dominant accidents were reviewed for applicability to Indian Point. During this review, which included a study of various Indian Point plant systems, cause was found to both add to and delete from the WASH 1400 list of dominant sequences.

In the interests of accuracy, sequences were added for Indian Point which involve loss of both emergency coolant recirculation and containment spray recirculation following a loss of coolant accident (LOCA). The WASH 1400 sequence in which core melt results from failure of containment spray injection following a small break LOCA was deleted because at Indian Point (unlike Surry), diverse fan coolers exist to perform the pressure suppression function. Sequences involving loss of auxiliary feedwater at shutdown were also deleted. This is also justified by design differences, and the experience at TMI which showed that ECCS injection in a "feed-and-bleed" mode can provide adequate core cooling to avoid fuel melting. The special case where both auxiliary feedwater and all AC power is lost was not deleted from the dominant sequence list. Finally, the ATWS sequences were deleted. These sequences have been analyzed by Westinghouse, the NSSS vendor, and found not to result in core melt in units of it's design.

Accident sequence probabilities were calculated for the specific configuration of Indian Point systems based, in general, on the initiating event probabilities and component failure rate data reported in WASH 1400. The probability of safety systems failure upon demand was calculated using a simplified fault tree method, similar to that employed in WASH 1400.

For each accident sequence there exists a number of possible containment failure modes, each with its associated probability of occurrence. The combination of an accident sequence and a containment failure mode defines an overall accident sequence which in turn permits the associated radiological source to be defined. In WASH 1400, the spectrum of possible source terms was divided into seven discrete categories.

Each combination of accident sequence and containment failure mode was placed in the most appropriate release category. The probabilities were summed for each category to obtain a total probability for that category of release. The WASH 1400 approach was also used in the Indian Point studies to retain a frame of reference for the study results.

Consequence estimates for long-term effects were calculated for each of the release categories using the CRAC code, which was developed for the Reactor Safety Study, and are reported in Attachment 1. Attachment 2 reports risk characteristics for short term consequences which are also calculated using CRAC; the release category probabilities, used in these risk calculations were obtained from Attachment 1. Actual demographic and meteorogical data for the Indian Point site were used in both Attachments 1 and 2.

The risk curves resulting from the attached studies show that the risk from short term effects at the Indian Point site falls significantly below the WASH 1400 risk curve for a PWR at a composite site (which is the average of 68 actual sites). By contrast, when a PWR, as analyzed in WASH 1400, is placed at the Indian Point site, risk is greater than the composite curve by up to a factor of 10. The latter comparison was the basis for the NRC staff presentation to the Commissioners wherein it was suggested that the core melt risk at the Indian Point site is unacceptably high.

The principal conclusion to be drawn from the short-term studies is that the level of risk associated with the Indian Point plants is less than the level of risk which has found implicit acceptance in past licensing actions, i.e., the level of risk reported in WASH 1400 for the reference PWR located at an average or "composite" site. This conclusion results from accident probability estimates based largely on the application of WASH 1400 methods and data to the specific design of the Indian Point plants. It is noted that the use of WASH 1400 for comparative purposes was both endorsed and encouraged by the WASH 1400 review panel. A second conclusion of importance is that consideration of both the site characteristics (demography and meteorology, etc.) and the specific plant design are essential before conclusions are drawn concerning the risk from core melt accidents for a particular reactor at a particular site.