12-4A

CONSOLIDATED EDISON CO. OF NEW YORK

PWR STEAM GENERATOR CHEMICAL CLEANING

Phase 1 Final Report
Solvent and Process Development

Prepared by Samuel Rothstein
Samuel Rothstein
Senior Engineer

Approved by Paul F. McTique
Paul F. McTique
Project Manager

Date 17 May, 1978

This report was prepared as an account of work sponsored by the United States Government. Neither the United States nor the United States Department of Energy, nor any of their employees, nor any of their contractors, subcontractors, or their employees, makes any warranty, express or implied, or assumes any legal liability or responsibility for the accuracy, completeness or usefullness of any information, apparatus, product or process disclosed, or represents that its use would not infringe privately owned rights.

8111020536 780517
PDR ADOCK 05000247
P PDR

F.F. #73

CONSOLIDATED EDISON COMPANY OF NEW YORK, INC.

PWR STEAM GENERATOR CHEMICAL CLEANING

PHASE I FINAL REPORT
SOLVENT AND PROCESS DEVELOPMENT

RETURN TO REGULATORY CENTRAL FILES
ROOM 016

— NOTICE —

THE ATTACHED FILES ARE OFFICIAL RECORDS OF THE DIVISION OF DOCUMENT CONTROL. THEY HAVE BEEN CHARGED TO YOU FOR A LIMITED TIME PERIOD AND MUST BE RETURNED TO THE RECORDS FACILITY BRANCH 016. PLEASE DO NOT SEND DOCUMENTS CHARGED OUT THROUGH THE MAIL. REMOVAL OF ANY PAGE(S) FROM DOCUMENT FOR REPRODUCTION MUST BE REFERRED TO FILE PERSONNEL.

DEADLINE RETURN DATE

Doc: 50-247
Control # 7815100040
Date 5/25/78 of Document:
REGULATORY DOCKET FILE

RECORDS FACILITY BRANCH

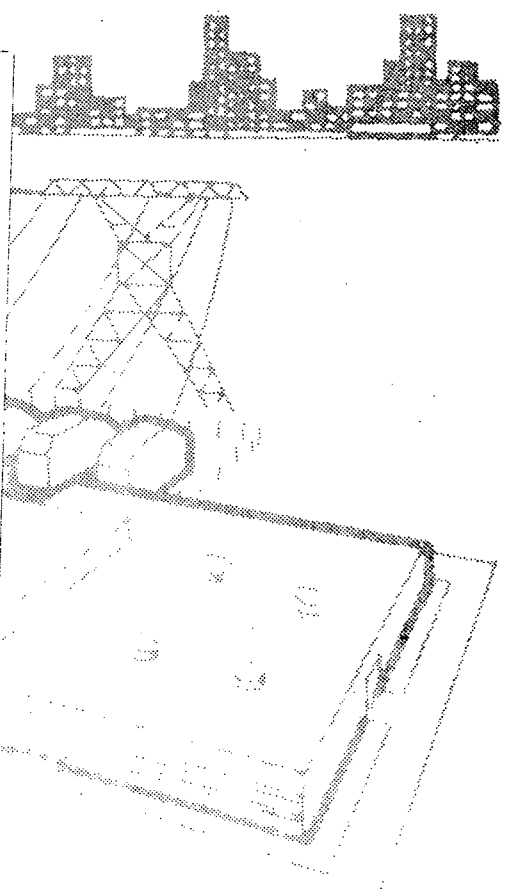

VOLUME I

PWR STEAM GENERATOR CHEMICAL CLEANING

SOLVENT AND PROCESS DEVELOPMENT

1.0 Abstract

2.0 Summary

3.0 Introduction

4.0 Statement of the Problem

5.0 Program Plan

6.0 Development of Solvent and Cleaning Cycle

7.0 Refinement of Solvent and Cleaning Cycle

8.0 Pilot Test

9.0 Waste Handling

10.0 Exposure of Personnel

11.0 Conclusions

12.0 Recommendations

1.0 ABSTRACT

Two chemical cleaning solvent systems and two application methods were developed to remove the sludge in nuclear steam generators and to remove the corrosion products in the annuli between the steam generator tubes and the support plates.

Laboratory testing plus subsequent pilot testing has demonstrated that, in a reasonable length of time, both solvents are capable of dissolving significant amounts of sludge, and of dissolving tightly packed magnetite in tube/support plate crevices. Further, tests have demonstrated that surface losses of the materials of construction in steam generators can be controlled to acceptable limits for the duration of the required cleaning period.

Areas requiring further study and test have been identified, and a preliminary procedure for chemical cleaning nuclear steam generators has been chosen subject to quantification based on additional tests prior to actual in-plant demonstration.

2.0 SUMMARY

Inspections of the secondary side of nuclear steam generators of modern PWR's have revealed accumulations of sludge and corrosion products.

The sludge accumulations are principally on the shell side of the tube sheet, and have contributed to tube-wall thinning (called wastage) and, in some instances, to tube cracking. Tube damage has been alleviated by a change in feedwater treatment either to a closer control of phosphate additions or to a change from phosphate treatment to "all-volatile treatment" of feedwater.

A corrosion product of great concern is a non-protective magnetite which develops in the annuli between tubes and tube support plates. The increase in the volume of the magnetite as compared to its parent metal has resulted in tube deformation (called denting) and in in-plane support plate expansion, leading, to flow slot "hourglassing" and, in some cases, to ligament cracking.

Under contract to the Department of Energy, Consolidated Edison Co. of N.Y. organized and is managing a program to develop appropriate solvents and to demonstrate methods for chemically removing the corrosion products in PWR steam generators.

With the assistance of two subcontractors, Halliburton Services and United Nuclear Industries, two solvents and two procedures for chemical cleaning were developed. Both were pilot tested with satisfactory results.

It is concluded that the chemical cleaning techniques developed can probably successfully remove, in a reasonable length of time, the corrosion products in the annuli between the tubes and the support plates in modern vertical steam generators. It is also concluded that corrosion of the materials of construction of the steam generators can be controlled within acceptable limits.

On the basis of the work completed, a preliminary choice of solvents and cleaning method has been made. However, several areas that require further study and test have been identified. On completion of the additional work and design of a system to implement the cleaning, the procedure will be refined. Actual in-plant steam generator cleaning would be implemented if (a) the results of on-going studies are found favorable and (b) steam generators that could benefit from cleaning have tube support arrangements which can be qualified for post cleaning operation.

3.0 INTRODUCTION

The heat transfer tubes in modern commercial nuclear steam generators are Inconel 600, a nickel-chromium-iron alloy (UNS N06600) and the support plates are drilled carbon steel. The principal reason for the selection of Inconel 600 for tubing by PWR manufacturers was its known corrosion resistance, particularly to chlorides.

Steam cycle water chemistry specifications initially provided for congruent phosphate treatment. During the years 1970-1972 some tube cracking was experienced in steam generators at locations other than Indian Point. Studies of failed tubes and sludge taken from a steam generator led to the conclusion that failure was due to stress corrosion resulting from free caustic in the sludge. The phosphate treatment was modified and no further cracking occurred. However, during the years 1972-1974, tube wall thinning was observed at several plants. This was attributed to a local acidic condition in the sludge. Consequently, in 1974, Combustion Engineering and Westinghouse each adopted new feedwater chemistry specifications to eliminate phosphate and to provide for chemistry control of the boiler water by "all volatile treatment" (AVT).

Shortly after most utilities adopted the AVT specification, it was first found that some tubes in steam generators at one plant did not permit passage of a standard eddy-current probe. Studies led to the recognition that thick deposits of magnetite were forming in the annuli between the tubes and the tube support plate. These "growing" deposits, being more voluminous than the steel from which they were formed, filled the clearance space in the annuli between the tubes and the support plates, and then exerted a compressive force on the tubing and the surrounding support plate. This resulted in deformation of the tubes (called denting) and in-plane expansion of the support plates. Typical "dent" and expanded support plate geometries are shown in Figures 3-1 through 3-4. In extreme cases the denting resulted in tube cracking at the region of maximum tube distortion, and the support plate expansion resulted in closure of the flow slots (called hour-glassing) and cracking of the ligaments between the tube holes and the flow holes. "Hour glassing", in turn, resulted in tube cracking in the close radius bends above the uppermost support plate because, by forcing the straight legs of the U-tube closer together, a high stress was deveoped in the apex of the bend.

Neither the tube "denting" nor the support plate expansion has any short-term effect on the integrity of steam generators.. However, in the event of a tube leak, it

is necessary to shut down the plant to plug the defective tube, thereby reducing plant availability.

Studies of longer term effects in terms of increased displacement of the support plates and resultant tube strain have made it possible to predict areas in which tubes might leak before the next inspection and can be plugged "preventively" to maintain generating unit availability. This course of action would lead ultimately to the need to operate at reduced power levels, and then to the need to retube or replace the steam generator, or, in some cases, to retire the generating plant prematurely.

The industry is taking complementary actions intended 1) to arrest the corrosion process, leaving in place the magnetite previously formed and 2) to remove the magnetite by chemical cleaning, thereby removing the unusual stresses on the tubes and the support plates.

It is Con Edison's opinion that the latter course of action offered the more immediate solution for many "dented" steam generators. During 1977, Con Edison placed a high priority on the development of a technique for chemically cleaning the secondary side of the PWR steam generators in order to avoid the risk of tube leaks, extensive preventive tube plugging and ultimate steam generator retubing or replacement. In September, 1977 Con Edison entered into a development contract with ERDA (now the Department of Energy) to develop a technique for chemically removing the corrosion products in the annuli between the steam generator tubes and the support plates.

4.0 STATEMENT OF THE PROBLEM

In the PWR system, the steam generator isolates the radioactive reactor coolant from the non-radioactive steam cycle, and serves as the heat exchanger between the two systems. (Figure 4-1)

Typically, the Combustion Engineering and the Westinghouse steam generators are vertical U-tube natural circulation boilers and consist of three sections--a reactor coolant channel head, an evaporator section and a steam drum section. (Figure 4-2, 4-3) The evaporator section is a shell and U-tube heat exchanger.

The steam generator is mounted vertically on support pads either cast integrally with the channel head or incorporated in an extension of the tube sheet.

During service, high temperature, high pressure reactor coolant enters the inlet side of the channel head at the bottom of the steam generator through the inlet nozzle, flows through the U-tubes to the outlet side of the channel and leaves the generator through the outlet nozzle. The inlet and outlet channels are separated by a partition plate.

On the secondary side of most steam generators currently in operation, feedwater enters the evaporator section of the steam genertor just above the top of the U-tubes through a feedwater ring. The water flows downward through an annulus between the tube bundle wrapper and the shell and then upward through the tube bundle where a portion of the water is converted to steam. The steam-water mixture from the tube bundle passes through a series of moisture separators which dry the steam for delivery to the turbine. The moisture removed from the steam is returned to the evaporator section.

An access opening (manway) for inspection and maintenance is provided in each half of the channel head. The upper shell (steam drum section) has two access openings for inspection and maintenance of the dryers. Two smaller access openings (handholes) in the lower shell permit inspection of the shell side of the tube sheet, and the flow slots in one or more support plates.

The Indian Point Unit No. 2 steam generators are Westinghouse Series "44". The heat transfer tubes are Inconel 600 (ASME SB163, Alloy UNS NO6600) and the support plates are carbon steel (ASME SA 285). The materials in the secondary side of the steam generator and their specified chemical composition are listed in Table 4-1.

Chemical composition of sludge removed from several steam generators have varied widely. Some of the analyses reported are listed in Table 4-2. More specifically analyses of sludge removed from Indian Point Unit No. 2 steam generators in March, 1978 after 19 months of operation with "phosphate" chemistry, and 25 months of operation with "AVT" chemistry are listed in Table 4-3. Generally, the principal constituents of the sludge are magnetite (Fe_3O_4) and copper.

On the basis of tube and support plate samples removed from operating steam generators, Westinghouse has reported that the principal constituent of the corrosion product in the annulus between a tube and support plate is magnetite (1)* The reported geometry of a "dented" tube and the surrounding corrosion products are shown in Figure 4-4.

It is obvious that, because of the deformation of the tubes and the support plates, the corrosion products in the annuli produce compressive stresses on the tubes while the tube hole/flow hole ligaments are still intact.

The rapidly growing non-protective magnetite is similar to that described by Potter and Mann who demonstrated similar magnetite growth in autoclaves. In the steam generator, the dissimilar metal couple (i.e. tube and support plate) may be aggravated by the effect of the superheat in the annulus which concentrates impurities in the boiler water.

It is known that the tubes in the Indian Point Unit No. 2 steam generators are dented. In September 1976, review of the data of eddy current examinations completed in March 1975 indicated that some tubes were dented at the time of the AVT change over. Subsequent eddy current examinations in November 1976 and April 1977 indicated that denting had developed at each tube/support plate intersection and that the average dent size had increased. Further, it was visually observed that some of the flow slots in the support plates had become hour glassed, the extent of closure of the 2 3/4" slot approaching one inch in some cases.

The steam generators in Indian Point Unit No. 1 are similar in function to those at Unit No. 2, but the design geometry is different. The Unit No. 1 steam generators consist of a horizontal U-tube U-shell heat exchanger and a separate steam drum. (Figure 4-5). The heat transfer tubes are stainless steel (ASME SA213 Type 304) and the support

*Numbers in parentheses refer to references listed at the end of each section.

plates are carbon steel (ASME SA105 Gr1 and 2). The materials in the secondary side of the steam generator and their specified chemical composition are listed in Table 4-4.

The Indian Point Unit No. 1 steam generators have been in active service from 1962 to 1974. Although random tube leaks did develop during that period, denting of the tubes by corrosion never developed. Consequently, it appeared that the Unit No. 1 steam generators could not be used directly for the study of the denting problem in situ. Resolution of the problem, however, could be advanced by use of Unit 1 in pilot tests of solvents and application methods.

The denting and its concomitant effects in the Indian Point Unit No. 2 steam generators were not as severe as those reported in other steam generators where decisions to replace the steam generators have already been reached. To attempt to avoid that cost and effort at Indian Point, Con Edison decided to pursue the development of a technique for chemically cleaning steam generators. Con Edison has extensive experience in chemical cleaning fossil boilers and heat exchangers. The Unit No. 1 steam generators afforded an opportunity to pilot test developing cleaning technology for application to nuclear heat exchangers.

References:

(1) E.P. Morgan, F.W. Pement, J.N. Esposito and R.G. Aspden "Examination of Denting and characterization of Associated Materials in the Tube Plate -- Tube Intersections of Westinghouse Nuclear Steam Generators" (Scientific Paper 76-7D2-SGEXM-D1) September, 1976.

5.0 PROGRAM PLAN

The development program was planned in two phases, as follows:

PHASE I

- Evaluate cleaning solvents and procedures.
- Develop procedures for cleaning Indian Point Unit No. 1 and No. 2 steam generators.
- Design and install facility modifications needed to accomplish chemical cleaning.
- Chemically clean Indian Point Unit No. 1 steam generators No. 11 and 12.
- Evaluate cleaning procedures with reference to applicablity to Unit No. 2 steam generators.

PHASE II

- Refine procedure for chemical cleaning Indian Point Unit No. 2 steam generators, and test in cleaning model(s) employing actual sludge and actual tube/support plate intersections
- Design and install facility modifications needed to accomplish chemical cleaning.
- Chemically clean Indian Point Unit No. 2 steam generators.

To supplement the staff assigned to this program, Con Edison retained two subcontractors, Halliburton Services and United Nuclear Industries, to pursue complementary development programs. Halliburton Services has world-wide industrial experience in cleaning fossil power plant components. United Nuclear Industries has experience in decontaminating nuclear systems and components (a chemical cleaning of radioactive surfaces), and in conjunction with their operation of the "N" reactor at Hanford, UNI has gained significant cleaning experience.

The scopes of work in the subcontract with Halliburton Services and United Nuclear Industries are contained in Appendices A and B, respectively.

6.0 SOLVENT DEVELOPMENT

6.1 Solvent Selection

A preliminary Con Edison literature search of solvents used in chemical cleaning fossil and nuclear vessels formed the basis for the identification of solvents listed in the subcontractors' scopes of work. A more comprehensive computer literature search was completed under the United Nuclear Industries subcontract and is presented in Appendix A of Volume II of this report. On the basis of the literature search plus the background experience of each contractor, 22 candidate solvents were initially selected for screening by laboratory testing for scale dissolution and base metal corrosion. As a result of screening, and solvent adjustment, two more were chosen for test. All solvents are listed in Tables 6-1A and 6-1B.

6.2 Test Equipment

As the development program was conducted at three different laboratories - Halliburton Services, United Nuclear Industries and Con Edison - test equipment differed to some extent. Generally, tests at atmospheric pressure were conducted in glass beakers either in water-baths or on hot plates. Tests above atmospheric pressure were conducted in autoclaves: Figures 6-1, 6-2 and 6-3 are sketches of typical laboratory arrangements.

6.3 Preparation of Test Specimens

6.3.1 Base Metal Preparation

Base metal corrosion tests were conducted on materials of the same specification as included in the steam generator.

6.3.2 Simple Corrosion Specimens

Several sizes of flat specimens were used for measuring surface losses after timed exposure to the solvents. The sizes included 1 1/2" x 1" x 1/16", 1 1/2" x 1/2" x 1/16" and 1" x 1/2" x 1/16", all with a 1/4" drilled hole for suspension in the solvent.

6.3.3 Stress Corrosion Specimens

Simple stress corrosion specimens were fabricated from flat specimens 4 3/4" x 1/2" x 1/16" with a 1/4" drilled hole at each end. These were bent into a "U" shape around a 3/8" radius, and the legs of the "U" brought parallel by tightening a bolt and nut in the 1/4" holes.

6.3.4 Stress/Crevice Couples

Flat speciments were machined to 4 3/4" x 1/2" x 1/16". Selected pairs of dissimilar metals were assembled with a 0.016" dia. stainless steel wire inserted between the pairs at each end (Figure 6-4). A screw at the middle of each pair was adjusted to deflect the pair so that the outer surface of the outer coupon was at the yield stress for that material. (See Volume II Section 3.1.3).

Also 6" x 1" x 1/16" specimens of SA533, sensitized 304 stainless steel and Inconel 600 were bent into a U-bend, and 6 1/2" x 1" x 1/16" 1020 mild steel, similarly bent, was placed on the outside of the other alloys and secured with a stainless steel bolt and nut.

6.3.5 Magnetite Coated Specimens

In order to evaluate the ability of the solvent to dissolve magnetite, a variety of specimens were prepared. These included the following:

a) A piece of boiler superheater tubing was cast in plastic, so that only the edge of the scale and the underlying base metal were exposed. (Figure 6-5a)

b) An Inconel 600 tube 0.628" dia x 1" long was placed in a 0.658" dia hole drilled in a 1 1/2" x 1 1/2" x 3/4" carbon steel block, and the assembly heated at 1300F in air and steam for several days. The Inconel tube and the block became sealed together by the growth of a layer of FeO (wustite) on the carbon steel surfaces. (Although this is different from the Fe_3O_4 (magnetite) present in the steam generators, the oxidized assembly provided a ready means for preliminary evaluation of dissolution capabilities). (Figure 6-5b).

c) Carbon steel spacers which had been exposed to "N" reactor primary coolant for 2 years and which were coated with magnetite were used three ways. Some were used as received; others were coupled with Inconel 600 by bolting and others were coated with epoxy cement patches. (Figure 6-5c). (See Volume II Section 3.1.3).

d) "Laboratory grown" magnetite samples were prepared by Westinghouse by placing a carbon steel plug in an Inconel 600 tube, covering the plug with a solution containing $CuCl_2$ at approximately 570F. Corrosion between the carbon steel plug and the Inconel tube caused the tube to bulge, thus forming a "reverse-dent". Appropriate length sections were taken from these assemblies. (Figure 6-6).

6.4 Screening tests

Series of tests were conducted to evaluate scale dissolution rates, base metal surface losses, effects of agitation of solvent and inhibitor effects.

The results of the preliminary screening tests are listed in tables 6-2A and B and 6-3A and B.

6.5 Preliminary Formulation of Cleaning Cycle

Additional tests, described in Volume II, Sec. 4 of this report, were conducted to optimize the composition of the solvent.

Furthermore, consideration of the need to dissolve the sludge and copper in the steam generators as well as to remove corrosion products from the annuli between the tubes and the support plates led to the formulation of the following complete cycles for preliminary test in pot boilers:

a) By Halliburton Services

1. Dissolve sludge with 8% EDTA + 4% Citric Acid, pH 4.2 (NH_4OH), 0.6% OSI-1, 250°F

2. Drain

3. Dissolve annuli corrosion products with 8% EDTA + 4% Citric Acid, pH 4.2 (NH_4OH), 0.6% OSI-1, 250°F

4. Drain

5. Repeat step 3

6. Dissolve copper by adding 1% sodium nitrite, pH 9.5 (NH_4OH), 150°F, with air blow

7. Drain

8. Rinse with deionized water.

9. Drain

b) United Nuclear Industries

1. Dissolve sludge with 10% Citric Acid + 1% HEEDTA, pH 3.5, 185°F

2. Drain

3. Dissolve copper with 10% Citric Acid + 1% HEEDTA, pH 9.5, 150°F, with air blow

4. Drain

5. Dissolve annuli corrosion products with 3% Citric Acid + 1% HEEDTA, pH 3.5, 185°F

6. Drop temperature to 140°F, raise pH to 9.5 and add 1% sodium nitrite to dissolve copper with air blow

7. Drain

8. Rinse with deionized water

9. Drain

10. Dissolve annuli corrosion products with 3% citric acid + 3% ascorbic acid, pH 3.5, 185°F

11. Drain

12. Rinse with deionized water

13. Drain

7.0 REFINEMENT OF SOLVENT AND CLEANING CYCLE

7.1 Pot Boiler Tests

In order to evaluate the proposed solvents and cleaning cycles, arrangements were made to utilize two Combustion Engineering pot boilers which had been used in an EPRI program to study denting. It was the objective of the pot boiler tests to evaluate:

- The ability of the solvent to dissolve the corrosion products(s) in the annuli between the tubes and the simulated support plates and in the samples taken from the Westinghouse test capsule.
- The ability of the solvent to dissolve the sludge in the pot boiler.
- The corrosive effects of solvent on tubes in the pot boiler and on corrosion coupons placed in the boilers.

The test plans, and the results of each of the pot boiler tests follow.

7.2 Halliburton Services Pot Boiler Test

7.2.1 Prior History of Boiler

7.2.1.1. The Pot boiler contained four Inconel 600 tubes with various Combustion Engineering carbon steel concentrating devices. The secondary side of the boiler is shown in Figure 7-1.

7.2.1.2 All concentrating device crevices were filled with the following mixture:

Fe_3O_4	71%
Cu	5%
Cu_2O	12%
Ni	12%

7.2.1.3 The pot boiler was operated for 72 days of which 60 days were with chloride faulted secondary

chemistry. Operation of the boiler was in three phases, as follows:

PHASE A

Chemistry: pH = 7.5-9.5

conductivity = 350 umhos/cm (maintained) with concentrated Dardanelle Reservoir water acidified to pH = 6.5 with H_2SO_4

Time: 35 days total exposure
30 days total fault

Inspection after Phase A: ECT examination showed 3-4 mil radial dents on Tube 4-hot and Tube 4-cold legs

PHASE B

Chemistry: pH = 8.2-9.2

conductivity = 7 umhos/cm

Time: 21 days total exposure
14 days on conditions

Inspection after Phase B: None

PHASE C

Chemistry: pH = 7.5-9.5

Cl = 100 ppm (mainatained with sea water)

Time: 16 days total fault prior to cleaning

Inspection after Phase C: ECT examination showed 1 mil radial dents on Tube 2, cold leg and on Tube 3, hot leg, and 7 mil radial dents on Tube 4 cold and hot legs

7.2.2 Piping Arrangement

The piping arrangement is shown schematically in Figure 7-2.

7.2.3 Corrosion Coupons

7.2.3.1 Corrosion coupons were positioned in the pot boiler as follows:

- Vapor Space:
  SA 508
  SA 516
  SA 533
  Stainless Steel 304 (sensitized)
- Water Space:
  SA 508
  SA 516
  SA 533
  Stainless Steel 304 (sensitized)
  Inconel
  W Dent specimen
- 1" to 4" from Tube Sheet
  SA 508
  SA 516
  SA 533
  Stainless Steel 304 (sensitized)
  Inconel
  W Dent specimen

  Stress couple

- Sludge on Tube Sheet
  Weld heat-affected zone samples (SA 516 to SA 508 and SA 508 to SA 533).
  Stressed galvanic couples (SA 516 & SA 508, SA 516 & Inconel, 304 & 304, Inconel & Inconel;
  Galvanic couples

7.2.3.2 Approximately two pounds of simulated sludge were added to the boiler. The composition of the sludge was:

Material	Relative %	Material	Relative %
Cu^o (metal)	20	NaH_2PO_4	1
CuO	2.5	Na_2HPO_4	8
Cu_2O	2.5	Na_3PO_4	1
Fe_3O_4	42	$Ca(OH)_2$	1
Fe_2O_3	15	$Mg(OH)_2$	0.4
NiO	4	Cr_2O_3	0.5
Ni	1	PbO	0.1
ZnO	1		

7.2.4 Solvent Preparation

7.2.4.1 The solutions listed in Table 7-1 were prepared.

7.2.5 Cleaning Cycle

7.2.5.1 The cleaning cycle consisted of the following:

1. Solution of sludge by EDTA/Citric solution - 5 hrs.

2. Solution of crevice corrosion products by EDTA/Citric solution - 36 hrs.

3. Solution of crevice corrosion products by EDTA/Citric solution - 45 hrs.

4. Copper removal by $NH_4OH/NaNO_2$ solution (plus air sparge - 12 hrs.

7.2.5.2 Solution of Sludge

40 liters of the cleaning solution were introduced into the pot boiler via the system charging pump, and heated to approximately 200°F.

The system was pressurized with 20 psi N_2 at 200°F.

The solution was maintained the desired cleaning temperatures (240°F to 250°F)

Once every hour, nitrogen was blown through a bottom port to a pressure of 50 psig. and then bled down to 30 psi (slowly).

The solvent was, sampled periodically to analyze for Iron content and unreacted EDTA content

When necessary fresh solvent was added via positive displacement pump.

The solvent remained in the pot boiler for a period of 5 hours, and drained at temperature under the N_2 cover.

7.2.5.3 Solution of Crevice Corrosion Products

Fresh cleaning solution was introduced into the pot, heated to maintain 250°F, and re-pressurized to 50 psig with N_2.

Once every hour, Nitrogen was blown through a bottom port to a pressure of 50 psig and bled down to 30 psig.

After 36 hours, the solvent was drained at temperatures under the N_2 cover.

Fresh cleaning solution was introduced into the pot and the procedures described above was repeated, this time for 45 hours. Then the system was cooled to 150°F.

7.2.5.4 Copper Removal

5 liters of 30% aqueous NH_3 was added to the solvent in the pot and agitated with $NaNO_2$ solution was added via a positive displacement pump.

A slow air blow into pot boiler was initiated and continued for 12 hours. The spent solvent was drained and the pot was filled with cool deionized H_2O and drained.

7.2.6 Post Cleaning Examination.

7.2.6.1 After cleaning and rinsing was completed, the boiler was disassembled for inspection. All tubes were eddy current examined for dents and defects. The tubes and boiler internals and corrosion coupons were visually examined as thoroughly as possible without disturbing conditions that could affect any subsequent tests.

7.2.6.2 One set of corrosion coupons was examined for weight loss, surface condition, cracking, attack at crevices and galvanic effects.

7.2.6.3 The W dent specimens were removed and examined as follows:

1. Small dia. wires (0.10") were used to probe crevice to determine depth of corrosion product removal.

2. As one flat of the W dent specimen had been ground flush before cleaning, the thickness of carbon steel removed from this surface during cleaning was measured with a toolmakers microscope.

7.2.7 Results

At the start of the test, the solvent temperature inadvertently was increased to above 300°F, indicating an even higher temperature on the tubes. After the test, all surfaces were found to have a black deposit. Subsequent analysis revealed that the deposit was rich in copper. A considerable fraction of the sludge on the

tube sheet remained undissolved. The data listed in Table 7-2 was developed.

7.3 United Nuclear Industries Pot Boiler Test

7.3.1 Prior History of Boiler

7.3.1.1 The pot boiler contained four Inconel 600 tubes with various Combustion Engineering carbon steel concentrating devices. The shell side of the boiler is shown in Figure 7-3.

7.3.1.2 All concentrating device crevices were initially prepacked with Fe_3O_4 only. (Copper carry over from previous test was later found to be present in the unit.) Additional Cu + CuO was packed in crevices after Phase C. (The objective was to make the UNI test comparable to Halliburton's)

7.3.1.3 The pot boiler was operated for 101 days, of which 91 days were with chloride faulted secondary chemistry. Operation of the boiler was in four phases, as follows:

PHASE A

Chemistry: pH = 7.5 - 8.5
Cl = 100 ppm (maintained with sea water)

Time: 39 days total exposure
34 days total fault

Inspection After Phase A: ECT exam indicated 1 mil radial on Tube 3-hot leg.

PHASE B

Chemistry: same

Time: 28 days total exposure 24 days total fault

Inspection After Phase B: ECT exam indicated increased dent (8 mils radial) on Tube 3-hot leg.

PHASE C

Chemistry: same

Time: 19 days total exposure 18 days total fault

Inspection After Phase C: ECT exam indicated no further change in dent indication in Tube 3-hot leg.

PHASE D

Chemistry: same

Time: 15 days total fault prior to cleaning

Inspection After Phase D: ECT exam indicated no further change in dent indication in Tube 3-hot leg, plus a 9 mil dent within the tubesheet.

7.3.2 Piping Arrangement

The piping arrangement is shown schematically in Figure 7-2.

7.3.3 Corrosion Coupons

7.3.3.1 Corrosion coupons were positioned in the pot boiler as follows:

- Vapor Space
  SA 285
  SA 508
  SA 533
  Inconel 600
  Stainless Steel 304 (sensitized)
  W Dent specimen
- Water Space
  SA 285
  SA 508
  SA 533
  Stainless Steel 304 (sensitized)
  Inconel 600
  2 W Dent specimens

- 1" to 4" from Tube Sheet
  SA 508
  SA 285
  SA 533
  Stainless Steel 304 (sensitized)
  Inconel 600
  2 W Dent specimens

  2 Stress couple holders

- Weld heat affected zone samples (SA 516 to SA 508 and SA 508 to SA 533);

  stressed galvanic couples (SA 516 & SA 508, SA 516 & Inconel, 304 & 304, Inconel & Inconel.

7.3.3.2 Approximately two pounds of simulated sludge were added to the boiler. The composition of the sludge was:

Material	Relative %	Material	Relative %
Cu^o (metal)	20	NaH_2PO_4	1
CuO	2.5	Na_2HPO_4	8
Cu_2O	2.5	Na_3PO_4	1
Fe_3O_4	42	$Ca(OH)_2$	1
Fe_2O_3	15	$Mg(OH)_2$	0.4
NiO	4	Cr_2O_3	0.5
Ni	1	PbO	0.1
ZnO	1		

7.3.4 Solvent Preparation

7.3.4.1 The solutions listed in Table 7-3 were prepared

7.3.5 Cleaning Cycle

7.3.5.1 The cleaning cycle consisted of the following operations:

1. Solution of Sludge Iron by Citric/HEEDTA - 6 hours

2. Solution of Sludge Copper by Citric/HEEDTA - 2 hours

3. Solution of crevice corrosion products by Citric HEEDTA - 24 hours

4. Copper removal - 6 hours

5. Solution of crevice corrosion products by Citric/Ascorbic Ascorbic - 48 hours

6. Solution of crevice corrosion products by Citric/Ascorbic - 48 hours

7. Rinse, demineralized water, with 0.1% Triton X-100.

8. Rinse demineralized water (no additives).

7.3.5.2 Solution of Sludge Iron

The Sludge-Iron solution was transferred to the pot boiler through bottom access port (through tube sheet flange) and nitrogen sparging was initiated through the two bottom access ports at approximately 0.5 cfm total.

The solution was maintained temperature at 185-190 F.

The solution was sampled every 30 minutes checked for pH, Fe and Cu.

After approximately 6 hours, the solution was drained maintaining nitrogen blanket.

7.3.5.3 Solution of Sludge Copper

The Sludge-Copper solution was transferred to the pot boiler through bottom access port, air sparge at 0.5 cfm was initiated and the solution temperature was maintained at 140-150 F.

After approximately 2 hours the solution was drained switching to nitrogen sparge before draining.

7.3.5.4 Crevice Iron Treatment

Crevice-Iron solution #1 was transferred to the pot through bottom access port. Nitrogen sparging was maintained at approximately 0.5 cfm, and the solution temperature maintained at 185-190F.

The solution was sampled from lower access port on the pot-shell and checked for pH and Fe and Cu.

At the end of 24 hours of treatment, the temperature was dropped to 140-150F.

7.3.5.5 Crevice Copper Treatment

2.8 liters 30% NH_4OH was then injected into the pot and nitrogen sparged maintained to insure mixing of solutions at 0.5 cfm

1.5 liters $NaNO_2$ solution was injected into the pot. Nitrogen sparge was maintained at 0.2 cfm during $NaNO_2$ to insure mixing. Then air sparge at 0.5 cfm was initiated.

The solution temperature was maintained at 140-150F with air sparge for approximately 6 hours. The solution was then drained from the pot after stopping air sparge and switching to nitrogen sparge. The pot was rinsed with hot (185F) demineralized water crevice-copper rinse, and drained, maintaining continuous nitrogen sparge at 0.5 cfm.

7.3.5.6 Second Crevice Iron Treatment

Crevice-Iron solution #2 was transferred to the pot boiler through bottom access port, nitrogen sparge was maintained at 0.5 cfm., and the solution temperature at 185-190 F. At the end of 48 hours of treatment with Crevice-Iron Solution #2, the solution was drained from the pot.

This crevice Iron Treatment was repeated, and then the pot was rinsed with hot (160-180 F) demineralized water with 0.1 ml/l Triton X-100. Agitated with 1.0 cfm nitrogen for 15 minutes, and drained. The pot was then rinsed with demineralized water (without additives) at 160-180 F and drained, maintaining nitrogen blanket.

7.3.6 Post Cleaning Examination

7.3.6.1 After cleaning and rinsing was completed, the boiler was disassembled for inspection, following the same procedure as for the Halliburton test.

7.3.7 Results

A considerable fraction of the sludge on the tube sheet remained undissolved. The data listed in Table 7-4 was developed.

7.4 Additional Development of Solvent and Cleaning Cycle

Tests were conducted to evaluate proposed improvements in solvent composition and in the cleaning cycle. Significant results relative to the Halliburton cleaning cycle are listed in Tables 7-5 and 7-6. Volume II Section 4 of this report contains a discussion of the tests relative to the United Nuclear Industries cycle. As a result, the following cycles were proposed for test in the steam generators at Indian Point Unit No. 1.

7.4.1 Proposed Halliburton Cleaning Cycle:

1. Dissolve sludge with 4% EDTA, pH 6-7, 200°F (approximately 30 hours).

2. Drop temperature to 140°F, raise pH to 9.5 (NH_4OH), add 0.5% sodium nitrite and air sparge to dissolve the copper (approximately 8 hours).

3. Drain and rinse

4. Dissolve corrosion products in the tube/support plate crevices with 8% EDTA + 4% citric acid, pH 4.2, 200°F (approximately 144 hours).

5. Raise pH to 8 (NH_4OH) and add 0.5% hydrazine to passivate the steel surfaces (approximately 4 hours).

6. Drain and rinse.

Note: Sludge solvent to contain 0.1% OSI-1; crevice corrosion products solvent to contain 0.6% OSI-1.

7.4.2 Proposed United Nuclear Industries Cleaning Cycle

1. Dissolve sludge with 10% Citric Acid + 1% HEEDTA, pH 3.5, temperature 185°F (approximately 12 hours).

2. Drop temperature to 140°F, raise pH to 9.5 (NH_4OH), add 1% sodium nitrite and air sparge to dissolve the copper.

3. Drain and rinse.

4. Dissolve corrosion products in the tube/support plate crevices with 3% citric acid + 3% ascorbic acid, pH 3.5, 185°F (approximately 36 hours).

5. Drain.

6. Repeat step 4 (approximately 60 hours).

7. Drain and rinse.

8. Dissolve copper in deionized water, pH 10 (NH_4OH), 140°F and air sparge (approximately 3 hours).

9. Add 0.1% hydrazine to passivate the steel surfaces.

10. Drain and rinse.

Note: all cleaning solvents to contain 0.3% diethylthiourea + 0.05% of Triton x 100 + 0.01% chevron N1-W.

8.0 PILOT TEST

8.1 Objectives

In order to evaluate the proposed solvents and cleaning cycles, provision was made to utilize two of the Indian Point Unit No. 1 steam generators. It was the objective of the pilot tests to evaluate:

- The ability of the solvent to dissolve the corrosion product(s) in the annuli between Inconel tubes and carbon steel plugs as taken from Westinghouse test capsules.
- The corrosive effects of the solvent on stainless steel tubes in the steam generator and on corrosion coupons placed in holders in the sample pot and in the steam generator downcomers.
- The suitability of the solvent handling procedure for use in the future cleaning of the Indian Point Unit No. 2 Steam Generators.
- The training of personnel in cleaning a nuclear steam generator.

The test plans and the results of each of the pilot tests follow.

8.2 Halliburton Services Pilot Test

8.2.1 Prior History of the Steam Generator

8.2.1.1 The steam generator is a horizontal U-tube U-shell heat exchanger and contains 811 1" diameter stainless steel tubes. The design is shown in figure 4-5.

8.2.1.2 The unit was in operation from 1962 to 1974. During that time the secondary water treatment was essentially "AVT" (all-volatile treatment). A total of 32 tubes are plugged. Of these 6 were plugged because of leaks, and 26 were plugged preventively on the

basis of eddy current test indications.

8.2.1.3 From 1974 to 1977, the generator was filled with water.

8.2.1.4 In September, 1977, all the tubes were eddy current inspected. No unacceptable defects were found; dents were reported in unsupported portions of the tubes between support plates, but not at the support plates.

8.2.2 Piping Arrangement

8.2.2.1 The piping arrangement is shown in Figures 8-1 and 8-2. Solvent was prepared in a mobile mixing tank, outside the plant, and was fed into the steam generator by way of piping to the shell side handholes. Spent solvent was drained from the steam generator and collected for waste processing.

8.2.3 Corrosion Coupons

8.2.3.1 Corrosion coupons and stressed U-bends were positioned in the steam generator. Coupons and U-bends included the following alloys:

SA105
SA285
SA508
SA516
SA533
304 Stainless Steel
304 Stainless Steel sensitized
Inconel 600

8.2.3.2 Vapor space coupons were placed in corrosion coupon holders and the holders were suspended in downcomers above the lower drum.

8.2.3.3 Liquid phase coupons and stressed U-bends were placed in corrosion coupon holders and the holder

were positioned in the test skid as shown in Figure 8-2.

8.2.3.4 Segments of W reverse dent capsules, were placed in a holder and the holder was positioned in the crevice sample chamber, (Figure 8-2). Lengths of segments were 3/4", 7/8", 1" and 1 1/8".

8.2.3.5 Segments of Westinghouse reverse dents and corrosion coupons of AISI 1020, SA508 and SA533 were placed in a corrosion coupon holder attached to an upper handhole in order to evaluate effects in a quiescent solvent.

8.2.4 Cleaning Cycle

8.2.4.1 The cleaning sycle consisted of the following:

1. Sludge removal: 4% EDTA, pH 6-7 temperature 200F approximately 30 hours.

2. Copper removal: Ammonium Hydroxide to raise pH to 9.5, add 0.5% Sodium Nitrite, temperature 140F, air sparge, approximately 8 hours.

3. Drain and rinse.

4. Crevice iron removal: 8% EDTA, 4% Citric Acid, pH 4.2 temperature 200F, approximately 144 hours.

5. Passivation: Add Ammonium Hydroxide to pH 8, 0.5% hydrazine, 4 hours.

6. Drain and rinse.

Note: 4% EDTA contained 0.1% OSI-1; 8% EDTA + 4% Citric Acid contained 0.6% OSI-1.

8.2.5 Post Cleaning Examination

8.2.5.1 After cleaning and rirsing, all steam generator tubes were to be examined by eddy current, and the results compared to the pre-cleaning examination results. (This examination not completed at the date of this report).

8.2.5.2 The shell side of the steam generator was visually examined to the extent practicable.

8.2.5.2 All corrosion coupons were examined for surface condition, weight loss, macro and micro crakcking, attack at crevices and galvanic effects.

8.2.5.3 W reverse dent specimens were examined for efficacy of corrosion products removal and corrosion of carbon steel plugs and Inconel tubes.

8.2.6 Results

The results of the pilot test in terms of surface losses of test coupons and dissolution of corrosion products are listed in Table 8-1.

Figures 8-3 and 8-4a and b plot the concentrations of iron and copper (in suspension as well as solution) in the solvent, and the changes in pH and in concentration of the EDTA in the solvent during the course of the sludge removal step and during the course of the crevice corrosion products dissolution step respectively.

During the crevice cleaning step, activity of the solvent gradually increased to a high of 2.9×10^{-2} μCi/ml. The isotopes present were cobalt 60, cesium 137, cesium 134 and manganese 54. It is believed that solvent entered those tubes that had failed in service and are now plugged at the tube sheet, and effected some dissolution of radioactive crud from inside the tubes. Spent solvent and rinse waters were collected in the Indian Point

waste collection tanks. The total volume waste generated was approximately 21,000 gallons.

8.3 United Nuclear Industries Pilot Test

8.3.1 Prior History of the Steam Generator

8.3.1.1 The steam generator is a horizontal U-tube U-shell heat exchanger and containes 811 1" diameter stainless steel tubes. The design is shown in figure 4-5.

8.3.1.2 The unit was in operation from 1962 to 1974. During that time the secondary water treatment was essentially "AVT" (all-volatile treatment). A total of 27 tubes are plugged. Of these 6 were plugged because of leaks, and 21 were plugged preventively on the basis of eddy current test indications.

8.3.1.3 From 1974 to 1977, the generator was filled with water.

8.3.1.4 In September, 1977, all the tubes were eddy current inspected. No unacceptable defects were found; dents were reported in unsupported portions of the tubes between support plates, but not at the support plates.

8.3.2 Piping Arrangement

8.3.2.1 The piping arrangement is shown in Figure 8-5. This arrangement utilizies existing in-plant piping and equipment plus a minimum of tie-lines and new piping. Solventwas prepared in the existing boric acid mixing tank, andwas fed into the steam generator by way of the chemical feed and blowdown system. Spent solventwas drained from the steam generator by way of the blowdown system and collected for waste processing.

8.3.3 Corrosion Coupons

8.3.3.1 Corrosion coupons and stressed U-bends were positioned in the steam generator. Coupons and U-bends included the following alloys:

SA105
SA285
SA508
SA516
SA533
304 Stainless Steel
304 Stainless Steel sensitized
Inconel 600

8.3.3.2 Vapor space coupons were placed in corrosion coupon holders and the holders were suspended in downcomers above the lowre drum.

8.3.3.3 Liquid phase coupons and stressed U-bends were placed in corrosion coupon holders and the holder was positioned in the test skid as shown in Figure 8-2.

8.3.3.4 Segments of Westinghouse reverse dent capsules, 3/4" long, were placed in a holder and the holder was positioned in a crevice sample chamber, as shown in Figure 8-2.

8.3.4 Cleaning Cycle

The cleaning cycle consisted of the following:

1. Sludge removal:* 7 1/2% Citric Acid, 1/4% HEEDTA, pH 3.5 - 3.7 temperature 185F approximately 13 hours.

*The initial plan was to use 10% Citric Acid + 1% HEEDTA, and to limit the volume to 1100 gal. However, due to a "misrun" and subsequent shortage of chemicals, a second cycle with 3000 gal. of the composition shown was initiated.

2. Copper removal: Ammonium Hydoxide to raise pH to 9.5, add 1% Sodium Nitrite, temperature 140F, Air sparge, approximately 12 hours.

3. Drain and rinse.

4. Crevice Iron removal: 3% Citric Acid, 3% Ascorbic Acid, pH 3.5, temperature 185F, approximately 41 hours.

5. Drain

6. Second crevice Iron removal: 3% Citric Acid, 3% Ascorbic Acid, pH 3.5, temperature 185F, approximately 61 hours.

7. Drain and risne.

8. Copper removal: Ammonium hydroxide, pH 10, 140F, air sparge, approximately 3 1/2 hours.

9. Passivation: Add 0.1% Hydrazine.

10. Drain and rinse.

11. Nitrogen sparge to dry.

8.3.4.1 All cleaning solvents contained 0.3% diethylthiourea, 0.05% Triton X-100 (iso-octyl phenoxy polyethoxy ethanol with 10 moles ethylene oxide) and 0.01% chevron NI-W (ethoxylated alkyl phenol).

8.3.4.2 All cleaning solvents were nitrogen sparged.

8.3.5 Post Cleaning Examination

8.3.5.1 After cleaning and rinsing, all steam generator tubes were to be examined by eddy current, and the results compared to the pre-cleaning examination results. (This examination was not completed at the date of this report).

8.3.5.2 The shell side of the steam generator was visually examined to the extent practicable.

8.3.5.3 All corrosion coupons were examined for surface condition, weight loss, macro and micro cracking, attack at crevices and galvanic effects.

8.3.5.4 Westinghouse reverse dent specimens were examined for efficacy of corrosion products removal and corrosion of carbon steel plugs and inconel tubes.

8.3.6 Results

The results of the pilot test in terms of surface losses of test coupons and dissolution of crevice corrosion products are listed in Table 8-2. Because of the misrun of the initial sludge removal step which may have resulted in non-representative corrosion losses of the corrosion coupons, additional sets of coupons were run along with the balance of the pilot test.

Figures 8-6, 8-7, and 8-8 plot the concentrations of iron iron and copper (in suspension as well as in solution) in the solvent and the changes in pH of the solvent during the course of the pilot test chemical cleaning.

During the crevice cleaning step, activity of the solvent gradually increased to a high of 5×10^{-3} μCi/ml. The isotopes identified were the same as in the Halliburton Services pilot test. The total volume of waste generated was approximately 23,000 gallons.

The United Nuclear Industries pilot test is discussed in greater detail in Volume II of this report.

Although the UNI cycle performed about as efficiently as the Halliburton cycle in terms of dissolution of corrosion products, a significant disadvantage of the citric/ascorbic solvent is the short

usable life of ascorbic acid, which breaks down on extended use and leaves a black deposit on all surfaces it contacts. This made it necessary to apply the solvent in two steps, which increased the total amount of spent solvent to be disposed of after cleaning.

9.0 WASTE HANDLING

Spent solvents resulting from the pilot test cleaning were disposed of adequately. During Unit 2 Steam Generator chemical cleaning volumes of spent solvent several times as great as the volumes used in pilot test cleaning can be anticipated. Therefore additional study on reducing volumes of spent solvents and waste disposal is planned. Experience with Unit 1 steam generators indicates that low activity spent solvents result i.e. of the order of 3×10^{-4} to 10^{-2} μCi/ml. Similar experience is expected with the spent solvents resulting from those Unit 2 steam generators that had experienced tube leakage during service. It is expected that less activity will be present in the spent solvent from Unit 2 steam generators that have not had any service leaks.

As an alternative to conventional waste concentration and solidification, it was considered that low concentration-low activity solvent wastes could be treated by filtration and/or ion-exchange.

Preliminary waste treatment tests were conducted to evaluate solidification properties of the candidate solvents. As an initial check, solidification tests were conducted with several representative chelant/hydrazine-type solvents. 10% EDTA + 1% hydrazine, pH 7 (ammonium hydroxide) and 5% EDTA, pH 4 (hydrazine) were solidified, using urea formaldehyde, portland cement-sodium silicate (a UNI patented process), gypsum, and Plaster of Paris.

Both solvents produced excellent products when solidified with portland cement-sodium silicate.

Solidification with urea formaldehyde produced an acceptable product, but with some free surface water.

The acceptable concentration ranges were:

(1) 100 grams solvent
45-60 grams portland cement - Type II
30 grams sodium silicate

(2) 100 grams solvent
50-70 grams urea formaldehyde - Broden 5H
15 ml phosphoric acide (75%)

Neither solvent could be adequately solidified with gypsum or Plaster of Paris.

Solidification tests conducted on the citric acid-based solvents are described in Section 4, Vol. II of this report. All samples solidified with portland cement/sodium

silicate were rated good, and foaming was not a problem. For in-plant use, the following concentration range would be considered desirable:

100 grams solvent
60-75 grams portland cement
25 grams sodium silicate

However, additional study is needed to demonstrate adequate procedures for concentrated solvents.

10.0 EXPOSURE OF PERSONNEL

The radiation exposure experienced in the course of chemical cleaning the Unit No. 1 steam generators was acceptable. The piping installation and preparation for the United Nuclear procedure resulted in approximately 13 man-rem exposure, and the actual chemical cleaning resulted in approximately 3 additional man-rem. The piping installation and preparation for the Halliburton procedure resulted in approximately 21 man-rem. and the actual cleaning resulted in approximately 3 additional man-rem. The positioning of corrosion specimens in and close to the steam generator during the Halliburton run resulted in approximately 7 man-rem.

11.0 CONCLUSIONS

Based on observations of effects on Westinghouse reverse dent samples, it is concluded that both chemical cleaning techniques developed can probably successfully remove, in a reasonable length of time, the corrosion products in the annuli between tubes and support plates of modern vertical steam generators. It is also concluded that corrosion rates in actual steam generator environments can be controlled within acceptable levels.

Additional work is necessary to complete the development of a chemical cleaning technique. On the basis of the work completed to date, it appears that the cleaning cycle that offers greater probability of success is the following:

1) Sludge removal by 4% EDTA solution, with sweetening to maintain a minimum of 1% active EDTA concentration

2) Crevice corrosion product removal by 8% EDTA + 4% citric acid solution sweetened to maintain a minimum of 6% active EDTA concentration

3) Copper removal by high pH plus air blow

4) Passivation by Hydrazine

12.0 RECOMMENDATIONS

It is recommended that the following additional areas be evaluated:

1. Corrosion rates of the materials of construction of the steam generator in the solvents selected with representative amounts of sludge taken from an operating steam generator.

2. Efficacy of solvents on actual tube/support plate crevice corrosion products, as evidenced by test on samples taken from a steam generator.

3. Effect of solvent on welds and heat affected zones of welds of the materials of construction in the steam generator.

4. Effect of solvent velocity on dissolution of corrosion products and on corrosion of base metals.

5. Effect of solvent residuals on steam generator materials during post-cleaning operation.

6. Capacity of solvent for dissolution of sludge based on tests on sludge removed from a steam generator.

7. Improved techniques for handling large volumes of low activity waste solvent and rinse waters.

Should the results of the above studies prove favorable, it is recommended that the project proceed to an actual in-plant demonstration on "dented" steam generators found to be qualified or modified to be qualified for post cleaning operation.

TABLE 4-1

INDIAN POINT UNIT 2 STEAM GENERATOR MATERIALS

Spec	C	Mn	P	S	Si	Other
SA 36	0.25 max	0.80-1.20	0.04 max	0.05 max	--	0.20 min Cu
SA 105 II (blowdown)	0.35 max	0.90 max	0.05 max	0.05 max	0.35 max	
SA 106 A+B (feed ring)	0.30 max	0.27-1.06	0.048 max	0.058 max	0.20 min	
SA 283 (support plate, wrapper)	0.06 max			0.05 max		0.20 min Cu
SA 285C (shell)	0.28 max	0.90 max	0.035 max	0.045 max		0.20-0.35 Cu
SA 302B (shell)	0.25 max	1.15-1.50	0.035 max	0.040 max	0.15-0.30	0.45-0.60 Mo
SA 336 (F1) (Nozzles)	0.20-0.30	0.60-0.80	0.050 max		0.20-0.30	0.40-0.60 Mo
SA 336 I II (tube-sheet, nozzles)	0.35 max	0.40-0.90	0.025 max	0.025 max	0.15-0.35	0.55-0.70 Mo, 0.05 max V 0.50-0.90 Ni, 0.25-0.45 Cr
SA 515-65 (shell)	0.33 max	0.90 max	0.035 max	0.04 max	0.15-0.30	
SA 516-70 (shell)	0.30 max	0.85-1.20	0.035 max	0.04 max	0.15-0.30	
SA 533 AI (shell)	0.25 max	1.15-1.50	0.035 max	0.040 max	0.15-0.30	0.45-0.60 Mo
SAE 1015-1025 (bolts, nuts)	0.13-0.28	0.30-0.60	0.04 max	0.050 max		
SB 163 - Inconel 600 (tubes)	.15 max	1.0 max		.015 max	0.5 max	72.0 min Ni 14.0-17.0 Cr 6.0-10.0 Fe 0.5 max Cu

TABLE 4-2

Analyses of Sludge Taken from Steam Generators at Several Utilities

Plant	A	B	C	D	E	F
Date Sampled	5/75	4/75	2/75	10/75	4/75	4/75
Major Component Weight (%)						
Cu	23-36	20	38-40	7.5-13	12	14
Fe	18-29	36	12-18	29-39	21	14
Ni	3.9-4.6	1.4	2.7	1.4-2.6	2.2	3.3
P	1.3-1.6	3.5	1.9	0.7-1.4	0.9	1.4
Zn	6.3-7.9	3.4	2.5	0.50	1.1	3.3
O_2	25		13-24	14-36		
Minor Components Weight (%)						
Al	0.2-0.4	0.3	0.2	2.6-3.8	0.3	0.5
Ca	0.7-1.0	0.9	2.0	0.2	1.5	0.6
Cr	0.6-0.8	0.7	0.3	0.9-1.7	0.4	0.7
Mg	0.4-7	1.3	1.3-1.5	0.5-0.7	0.4	1.4
Na	0.4	0.7	0.9-1.1	0.5-0.6	0.6	---
Si	0.9-1.1	0.3	0.3	0.6	0.7	1.1
C	0.9-1.1	0.3	0.3	0.5-1.3	0.7	

TABLE 4-3

Analyses* of Sludge Taken from
Indian Point Unit No. 2 Steam Generators
(March, 1978)

Petrographic Analysis:

Fe_3O_4	35-85%
Fe_2O_3	Trace
Cu (metal)	10-55%
Cu (CuO)	1-10%
$Si\ O_2$	Trace
Ca_3PO_4	Trace

Quantitative Analysis

Fe (as Fe_3O_4	38-69%
Cu (as Cu)	23-50%
Zn (as Zn)	1.6-2.3%
Al (as Al)	0.2%
Ni (as Ni)	0.7-1.2
B (as BO_3)	1.9-2.0
Chlorides	0.02-0.04
Sulfates	not detected
Phosphates (water sol.)	0.001-0.008
Phosphates (water insol.)	1.8-2.7

*Ranges of several analyses of sludge from different steam generators.

Table 4-4

INDIAN POINT UNIT NO. 1 STEAM GENERATOR MATERIALS

Spec	C	Mn	P	S	Si	Ni	Cr
SA 105/Gr I (support plates)	0.30 max	0.90 max	0.05 max	0.05 max	0.35 max		
SA 105/GR II (Tube-sheet, Support Plates)	0.35 max	0.90 max	0.05 max	0.05 max	0.35 max		
SA 105 A+B (Nozzles)	0.30 max	0.27-1.06	0.048 max	0.058 max	0.10 min		
SA 210 GRA-1 (Downcomer)	0.27 max	0.93 max	0.048 max	0.058 max	0.10 min		
SA 212 GRB (Shell)	0.35 max	0.90 max	0.035 max	0.04 max	0.15-0.30		
SA 213 TP 304 (tubes)	0.08 max	2.00 max	0.040 max	0.030 max	0.75 max	8.0-11.0	18-20

TABLE 6-1A

SOLVENTS EVALUATED

I. By Halliburton Services

1. 10% EDTA* (See Note a.)
   1% Hydrazine (N_2H_2)
   NH_4OH to pH 7

2. 10% EDTA
   1% N_2H_2
   NH_4 OH to pH 4.2

3. 4 1/2% EDTA (See Note b.)
   NH_4OH to pH 7

4. 10% Citric Acid
   NH_4 to pH 4
   followed by addition of
   1000 ppm N_2H_2
   NH_4OH to pH 7

5. 8% EDTA
   4% Citric Acid
   NH_4OH to pH 4
   followed by addition of
   1000 ppm N_2H_2
   NH_4OH to pH 4

6. 8% EDTA
   4% Tartaric Acid
   NH_4OH to pH 4

7. 8% EDTA
   3% Oxalic Acid
   NH_4OH to pH 4

*ethylene diamine tetracetic acid

Note a. Solvent proposed in paper by F.J. Pocock and W.S. Leedy, Chemical Cleaning Research for Nuclear Steam Generators, International Water Conference, Pittsburgh, PA, Nov. 3, 1971. Solvent was tested by both Halliburton and UNI.

Note b. Solvent suggested by Westinghouse in oral communication, and evaluated by both Halliburton and UNI.

TABLE 6-1B

SOLVENTS EVALUATED (cont.)

II. By United Nuclear Industries

1. EDTA 10% ***
   N_2H_4 1%
   NH_4OH to pH 7

2. Citric Acid 3%
   NH_4OH to pH 3.5

3. HEEDTA 5%*
   N_2H_4 to pH 4

4. Phosphoric Acid 10% as Turco 4512A

5. Oxalic Acid 4.1/2%
   Citric Acid 2%
   NH_4OH to pH 4
   H_2O_2 to 1.0 M

6. DTPA 5%**
   N_2H_4 to pH 4

7. EDTA 20%
   N_2H_4 1%
   Ammonium Oxalate 1%
   NH_4OH to pH 7

8. HEEDTA 10%
   Ammonium Oxalate 1%
   NH_4OH to pH 4

9. EDTA 4 1/2% ***
   NH_4OH to pH 7

10. EDTA 5%
    N_2H_4 to pH 4

11. Citrox 10% as Turco 4521

12. EDTA 3%
    Citric Acid 2%
    N_2H_4 to pH 7

13. EDTA 10%
    NH_4OH to pH 9
    Acetic Acid to pH 7

14. DTPA 5%
    Citric Acid 2%
    N_2H_4 to pH 8

15. EDTA 4.5%
    Ammonium Oxalate 1%
    NH_4OH to pH 7

16. HEEDTA 10%
    NH_4OH to pH 4

17. 3% Citric Acid
    3% Ascorbic Acid
    NH_4OH to pH 3.5

18. 3-10% Citric Acid
    1% HEEDTA
    NH_4OH to pH 3.5

19. HEEDTA 10%
    3% Ascorbic Acid
    NH_4OH to pH 7

---

*hydroxy ethyl ethylene diamine triacetic acid
**diethylene triamine pentacetic acid

***See Notes in Table 6-1A.

TABLE 6-2A INITIAL SCREENING OF SOLVENTS BY CORROSION EFFECTS

(HALLIBURTON SERVICES)

Corrosion Loss of 1020 Mild Steel, 304 Stainless Steel, and Inconel 600 in Selected Solvents (24-Hour Tests)

Solvent	Test No.	Temp. °F	Inhibitor and Concentration (Vol.%)	Surface Loss Per Face, Mils			Extent of Pitting		
				1020 MS	304 SS	Inconel 600	1020 MS	304 SS	Inconel 600
10% EDTA + 1% N_2H_4, pH 7.0 (NH_4OH)	1	300	None	4.2	--	--	None	--	--
	2	250	None	3.4	--	--	None	--	--
	3	190	None	0.8	--	--	None	--	--
	4	300	0.2% OSI-1	0.4	0.002	0.3	None	None	None
	5	250	0.2% OSI-1	0.16	0.000	0.005	None	None	None
	6	190	0.2% OSI-1	9.01	--	--	None	--	--
	7	300	0.2% Rodine 31A	0.19	<0.001	0.04	Severe	None	None
	8	250	0.2% Rodine 31A	0.28	<0.001	0.03	Severe	None	None
	9	190	0.2% Rodine 31A	0.01	--	--	None	--	--
10% EDTA + 1% N_2H_4, pH 4.2 (NH_4OH)	1	300	None	4.1	--	--	None	--	--
	2	250	None	3.7	--	--	None	--	--
	3	190	None	2.8	--	--	None	--	--
	4	300	0.1% OSI-1	0.06	<0.001	0.03	None	None	None
	5	250	0.1% OSI-1	0.07	<0.001	<0.001	None	None	None
	*6	250	0.1% OSI-1	0.06	--	--	None	--	--
	7	190	0.1% OSI-1	0.05	--	--	None	--	--
4 1/2% EDTA, pH 7.0 (NH_4OH)	1	300	None	1.7	--	--	None	--	--
	2	250	None	1.2	--	--	None	--	--
	3	190	None	0.5	--	--	None	--	--
	4	300	0.25% Trihexylamine	1.8	<0.001	--	None	None	--
	5	250	0.25% Trihexylamine	1.8	<0.001	--	None	None	--
	6	190	0.25% Trihexylamine	0.7	--	--	None	--	--
	7	300	0.1% OSI-1	0.09	<0.001	0.005	None	None	--
	8	250	0.1% OSI-1	0.07	<0.001	0.1	None	None	--
	9	190	0.1% OSI-1	0.03	--	--	None	--	--
10% Citric Acid, pH 4.0 (NH_4OH)	1	250	None	5.9	--	--	None	--	--
	2	250	0.1% OSI-1	0.2	0.001	0.001	None	None	None
	*3	250	0.2% OSI-1	0.3	--	--	None	--	--
8% EDTA, 4% Citric Acid, pH 4.0 (NH_4OH)	1	300	0.1% OSI-1	0.3	0.001	0.4	None	None	None
	2	250	0.1% OSI-1	0.2	0.001	0.008	None	None	None
	*3	250	0.2% OSI-1	0.4	--	--	None	--	--
8% EDTA, 3% Oxalic Acid, ph 4.0 (NH_4OH)	1	300	0.1% OSI-1	1.0	0.9	0.1	Trace	None	None
	2	250	0.1% OSI-1	0.3	<0.001	0.06	Moderate	None	None
8% EDTA, 4% Tartaric Acid, pH 4.0 (NH_4OH)	1	300	0.1% OSI-1	0.6	0.001	0.04	Trace	None	None
	2	250	0.1% OSI-1	0.9	<0.001	0.2	None	None	None

*These solvents contained 0.2% superflo surfactant, and were mechanically agitated.

TABLE 6-2B

Initial Screening of Solvents by Corrosion Effects
(United Nuclear Services)

Corrosion Loss of SA245 Mild Steel in Selected Solvents
(24-Hour Test, 185°F)

Solvent	Surface Loss per Face, Mils	Extent of Pitting*
10% EDTA + 1% N_2H_2, pH 7 (NH_4OH)	0.07	8
4 1/2% EDTA, pH 7 (NH_4OH)	0.2	20
3% Citric Acid, pH 3.5 (NH_4OH)	0.2	100
5% EDTA, pH 4 (N_2H_2)	0.2	4
5% HEEDTA, pH4 (N_2H_2)	0.2	2
10% Citrox (Turco 4521)	0.5	100
10% Phosphoric Acid (Turco 4512A)	0.1	5
3% EDTA + 2% Citric Acid, pH 7 (N_2H_2)	0.1	6
4 1/2 Oxalic Acid + 2% Citric Acid, pH 4 (NH_4OH)	0.3	30
10% EDTA + NH_4OH to pH 9 + Acetic Acid to pH 7	0.1	25
5% DTPA, pH 4 (N_2H_2)	0.2	4
5% DTPA + 2% Citric Acid, pH 8 (N_2H_2)	0.2	15
20% EDTA + 1% N_2H_2 + 1% Ammonium Oxalate, pH 7 (NH_4OH)	0.1	8
4 1/2% EDTA + 1% Ammonium Oxalate, pH 7 (NH_4OH)	0.2	15
10% HEEDTA + 1% Ammonium Oxalate, pH 4 (NH_4OH)	0.3	100

Note: All solvents except Turco 4521 and 4512A contained 0.1% diethyl thiourea inhibitor.

*Pitting ratings refer to corvator readings - the lower the number, the lesser the extent of pitting.

TABLE 6-3A

Screening of Solvents for Scale Dissolution

(Halliburton Services)

A. Time for Complete Removal of Wustite Scale from Inconel/Carbon Steel Assemblies

Solvent*	Test Condition	Time for Scale Removal (Hrs.)	
10% EDTA + 1% N_2H_2, pH 4	Agitated	91	
10% Citric Acid, pH 3.5	Agitated	72	
8% EDTA + 4% Citric Acid, pH 4.5	Agitated	53	
8% EDTA + 4% Citric Acid, pH 4.2	Quiescent	70	

B. Time for complete Removal of Magnetite from Superheater Tube/Plastic Mount

10% EDTA + 1% N_2H_2, pH 4.2	Agitated, changed every 24 hours	100	
8% EDTA + 4% Citric Acid, pH 4.2	Agitated, changed every 24 hours	55	
8%EDTA + 4% Citric Acid, pH 4.2, 0.2% OSI-1	Quiescent	96	(65% Removal)
8% EDTA + 4% Citric Acid, pH 4.2, 0.4% OSI-1	Quiescent	96	(90% Removal)
8% EDTA + 4% Citric Acid, pH 4.2, 0.6% OSI-1	Quiescent, 200F	168	
16% EDTA + 8% Citric Acid, pH 4.2, 0.6% OSI-1	Quiescent, 200F	144	

*Unless otherwise indicated, all solvents contained 0.2% OSI-1 inhibitor and 0.2% superflo surfactant, and all tests were conducted at 250°F.

TABLE 6-3B

Screening of Solvents for Scale Dissolution

(United Nuclear Industries)

Removal of Magnetite from N-Reactor Carbon Steel Spacers in 20 Hours

Solvent	% Removal
10% EDTA + 1% N_2H_2, pH 7 (NH_4OH)	98.4
4 1/2 % EDTA, pH 7 (NH_4OH)	99.6
3% Citric Acid, pH 3.5 (NH_4OH)	98.8
5% EDTA, pH 4 (N_2H_2)	99.4
5% HEEDTA, pH 4 (N_2H_2)	99.4
10% Citrox (Turco 4521)	99.2
10% Phosphoric Acid (Turco 4512A)	99.2
3% EDTA + 2% Citric Acid, pH 7 (N_2H_2)	98.2
4 1/2% Oxalic Acid + 2% Citric Acid, pH 4	99.0
10% EDTA + NH_4OH to pH 9 + Acetic Acid to pH 7	99.1
5% DTPA, pH 4 (N_2H_2)	99.6
5% DTPA +2% Citric Acid, pH 8 (N_2H_2)	98.7
20% EDTA + 1% N_2H_2 + 1% Ammonium Oxalate, pH 7 (NH_4OH)	97.0
4 1/2% EDTA + 1% Ammonium Oxalate, pH 7 (NH_4OH)	95.0
10% HEEDTA + 1% Ammonium Oxalate, pH 4 (NH_4OH)	99.2

TABLE 6-3B (Cont.)

Screening of Solvents for Scale Dissolution

(United Nuclear Industries)

Time to Free Carbon Steel Plug from Westinghouse Reverse Dent Sections

Solvent*	Test Condition	Time to Free Plug
3% Citric Acid	185°F	>300 hours
3% Citric Acid + 1% HEEDTA, pH 3.5	185°F	>300 hours
3% Citric Acid + 3% Ascorbic Acid, pH 3.5	185°	160 hours
10% Citric Acid		>230 hours

*All solvents contained 0.1% Diethyl thiourea inhibitor, 0.05% Triton X-100 and 0.01% chevron N1-W.
For more detailed description of these and other tests see Volume II of this report.

Table 7-1

Halliburton Solvents

1. **EDTA + 4% Citric Acid Solution**

   Prepare 45 liters of aqueous ammoniated solution containing 8% EDTA + 4% citric acid (pH 4.2) and inhibited with 0.6 volume percent OSI-1.

   a. Add 30 liters of water to the mixing tank.

   b. Add 3,780 grams of EDTA (acid) to the mixing tank.

   c. Add aqua ammonia (30% NH_3) to the mixing tank, with continuous stirring, to pH to 5.5. (Approximately 1,970 ml of aqua ammonia will be required.).

   d. Add 2,080 grams of citric acid monohydrate to the mixing tank contents and agitate to blend the components. Slowly add aqua ammonia to the contents of the mixing tank for final pH adjustment to pH 4.2 after all citric and EDTA are dissolved. (Approximately 910 ml of aqua ammonia will be required.)

   e. Add 270 ml of OSI-1 to the contents of the mixing tank.

   f. Add sufficient water until the volume of the fluid in the mixing tank is 45 liters and agitate to mix thoroughly.

2. **Sodium Nitrite Solution**

   a. Dissolve 1 lb. of $NaNO_2$ in the smallest possible volume of water (estimated 1 liter).

TABLE 7-2

Results of Halliburton Pot Boiler Test

1. The surface losses during cleaning cycle.

   a. Uniform corrosion coupons:

Material	Surface Loss (mils) Vapor Space	Liquid Phase	Tube Sheet
SA508	0.12	4.4	3.7
SA516	0.18	2.3	2.8
SA533	0.14	6.3	4.9
SS304 (sensitized)	<.01	0.06	0.04
Inconel 600	<0.01	<0.01	<0.01

   b. Galvanic couple:

SA105	0.9
SS304	<0.01

2. Overall corrosion product removed:

   Iron 896 grams; Copper 40 grams.

   (Note: Preload of sludge contained Iron 517 grams; Copper 231 grams)

3. Crevice corrosion products removed from W reverse dent samples:

   a. Depth of removal of corrosion products:
      0.006" to 0.200"

   b. Corrosion of carbon steel plug:
      ≤0.001 to 0.006"

TABLE 7-3

UNI Solutions

1.	Citric Acid	110 grams/liter
	HEEDTA	10 grams/liter
	NH_4OH to pH 3.5	
	Diethylthiourea	3 grams/liter
	Surfactant I	0.5 grams/liter
	Surfactant II	0.1 grams/liter
2.	As above (1) plus:	
	NH_4OH to pH 9.5 - 10.0	
	Sodium Nitrite	10 grams/liter
3.	Citric Acid	30 grams/liter
	HEEDTA	10 grams/liter
	NH_4OH to pH 3.5	
	Diethylthiourea	3 grams/liter
	Surfactant I	0.5 grams/liter
	Surfactant II	0.1 grams/liter
4.	As above (3) plus:	
	NH_4OH to pH 9.5 - 1.0	
	Sodium Nitrite	10 grams/liter
5.	Citric acid	30 grams/liter
	Ascorbic acid	30 grams/liter
	NH_4OH to pH 3.5	
	Deithylthiourea	3 grams/liter
	Surfactant I	0.5 grams/liter
	Surfactant II	0.1 grams/liter

Table 7-4
Results of United
Nuclear Pot Boiler Test

1. The surface losses during cleaning cycle.

a. Uniform corrosion coupons:

Material	Surface Loss (mils) Vapor Space	Liquid Phase	Tube Sheet
SA285	0.04	1.5	9.6
SA508	0.04	0.7	5.3
SA533	0.03	0.9	8.2
SS304 (sens)	<0.01	<0.01	<0.01
Inconel 600	<0.01	<0.01	<0.01

b. Galvanic couple:

SA105	5.5
SS304	0.3

2. Overall corrosion products removed:

Iron 640 grams; Copper 51.5 grams

(Note: Preload of sludge contained:
Iron 517 grams; Copper 231 grams

3. Crevice corrosion products removed from W reverse dent samples:

a. Depth of removal of corrosion products: 0.044" to 0.090"

b. Corrosion of carbon steel plug: 0.002 to 0.048"

TABLE 7-5

Effect of Inhibitor on Alloy Corrosion Rate and Coating Formation

Note: Solvent used was ammoniated 8% EDTA + 4% citric acid (ph = 4.50 at 200°F for 6 days.

Inhibitor Concentration, Weight, %	Average Penetration per Face, mils		Extent of Pitting on Faces		Extent of Coating Formation
	SA508	SA533	SA508	SA533	
0.6% OSI-1	0.16	0.18	None	None	None
0.3% OSI-1	0.17	0.17	None	None	None
0.3% MSA Inhibitor + 0.3% C-25[1]	0.0090	0.12	None	None	Significant
0.1% MSA Inhibitor + 0.1% C-25[1]	0.13	0.18	None	None	Significant

[1] Ethomeen C-25 solubilizer.

TABLE 7-6

Effect of Inhibitors on Weight Loss of Copper Metal Coupons

Note: Solvent used was continously aerated, ammoniated 8% EDTA 4% citric acid, 1% $NaNO_2$ + 0.5% ferric ammonium citrate (ph = 9.5) at 140°F for 6 hours.

Inhibitor Concentration, Percent	NF-1 Concentration, Percent	Coupon WT, Loss, gm
0	0	0.27
0	0.05	0.20
0.1 MSA Inhibitor	0.05	0.12
0.3 MSA Inhibitor	0.05	0.06
0.1 OSI-1	0.05	0.04
0.6 OSI-1	0.05	0.03
0.1 Rodine 31A	0.05	0.03
0.3 Rodine 31A	0.05	0.014
0.6 Rodine 31A	0.05	0.014

TABLE 8-1

Results of Chemical Cleaning Con Edison
Indian Point #1 Steam Generator 11
Halliburton Services Procedure

1. Uniform corrosion coupons:

Material	Surface Loss (mils)* Total Cleaning Cycle
	Liquid Phase (circulating)
SA105	2.3
SA285	2.0
SA508	1.8
SA516	1.5
SA533	1.4
SS304	0.001
SS304 (sensitized)	0.02
Inconel	0.003
	Liquid Phase (Quiescent)
1020	1.4
SA508	0.6
SA533	0.7

2. U-bend coupons:

SA105	1.6
SA285	1.8
SA508	0.8
SA516	1.1
SA533	2.5
SS304	0.005
SS304 (sensitized)	0.03
Inconel	0.01

3. Vapor phase coupon losses were all less than 0.1 mils

4. Corrosion products removal:
   Iron: 350 lbs.
   Copper: 11 lbs.

5. Westinghouse Reverse dent samples
   a. At end of 58 hours:
      Plug of 3/4" sample dropped out.
   b. At end of 108 hours:
      Plug of 7/8" sample dropped out.
   c. At end of 144 hours:
      Plug of 1" sample dropped out,
      1 1/8" sample almost clean.
   d. Dimensional loss of samples:
      Height 0.001 - 0.003

*Maximum; where more than one coupon of an alloy was used, the loss reported is the largest.

TABLE 8-2

Results of Chemical Cleaning Con Edison
Indian Point #1 Steam Generator 12
United Nuclear Industries Procedure

1. Uniform Corrosion coupon

	Surface Loss (mils)*	
	First Sludge Removal only	Complete Cleaning Cycle**
SA105		3.7
SA285	5.0	3.6
SA508	1.3	3.0
SA516	3.7	3.6
SA533	5.6	3.3
SS304		0.001
SS304 sensitized	0.001	0.007
Inconel 600	>0.001	0.005

2. U-bend coupons

SA105	3.5	7.5
SA285	3.1	6.9
SA508	1.8	3.7
SA516	3.3	4.9
SA533	3.6	9.3
SS304		0.005
SS304 sensitized	>0.001	0.01
Inconel		0.002

3. Vapor phase coupon losses were all less than 0.1 mils

4. Stress/Crevice pairs (Liquid Phase)

Material	Surface Loss (mils)
Inconel	0.001
SA533	6.7
SS304 (sens.)	0.004
SA205	7.5
SA508	1.4
SA516	5.6
Inconel	0.001
SA285	6.0

5. Corrosion products removal:
   - Iron: 425 lbs.
   - Copper: 11 lbs.
   - Nickel: 3 lbs.

6. Westinghouse reverse dent samples:
   a. At end of 38 hours:
      Plug of one samples dropped out -- sample completely cleaned; other two samples 80 - 90% cleaned.
   b. At end of 61 hours:
      Remaining plugs dropped out -- samples completely cleaned.
   c. Dimemsional loss of samples:
      Height -- 0.001 to 0.003"

*Maximum; where more than one coupon of an alloy was used, the loss reported is the largest.
**Values given are for coupons in pilot test during complete cycle, including first sludge removal step, and probably are greater than those representative of a normal procedure.

DESIGN CONDITION

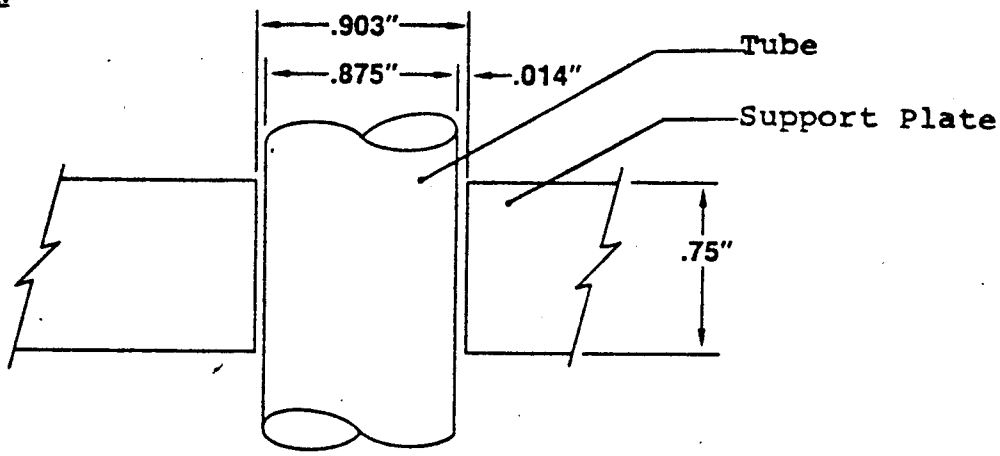

TYPICAL DENTED CONDITION

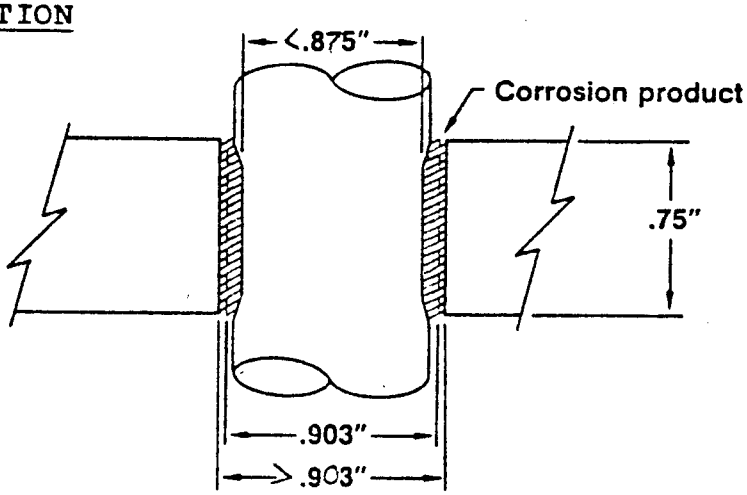

DENTING OF TUBES

FIGURE 3-2

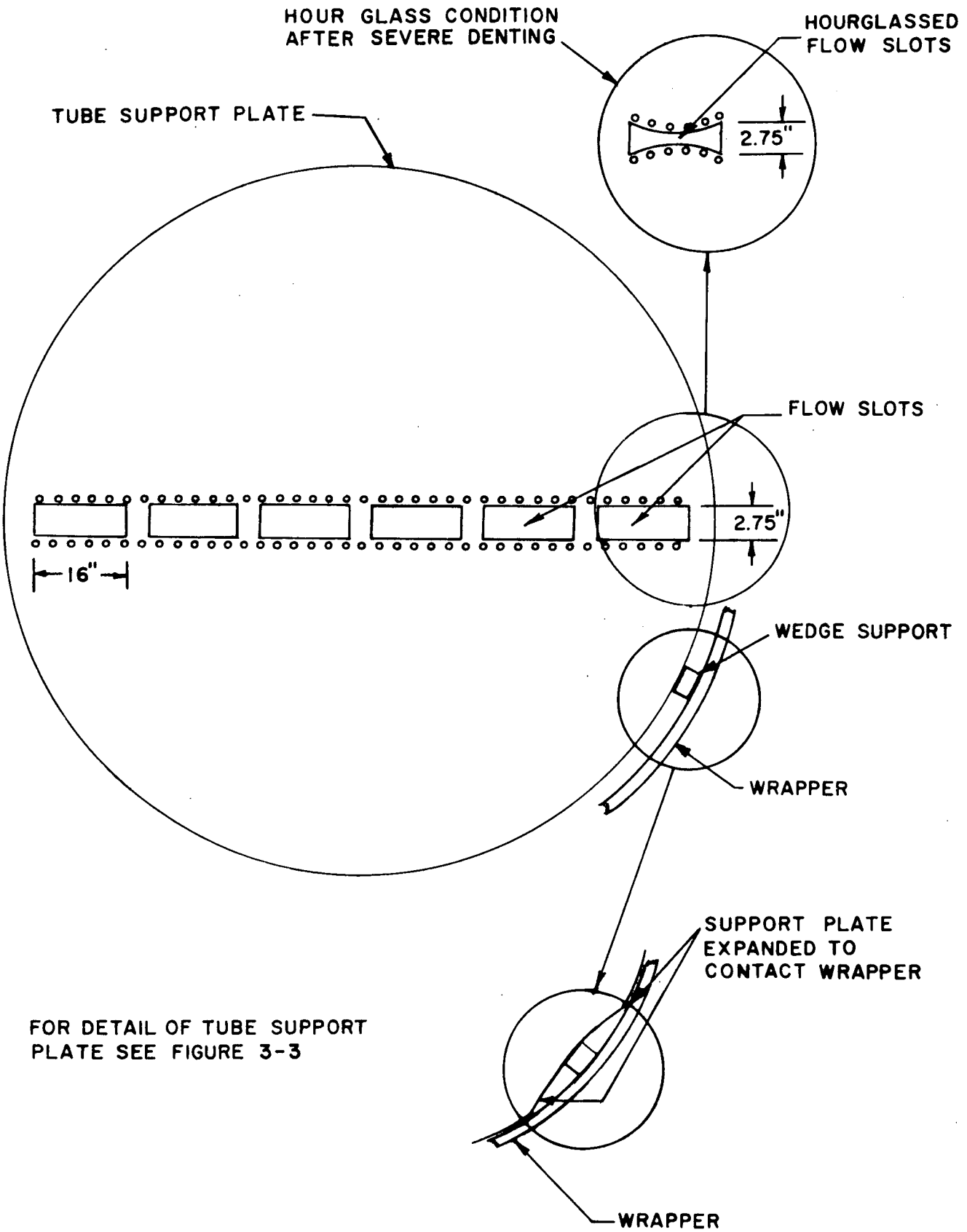

TUBE SUPPORT PLATE DEFORMATION

FIGURE 3-3

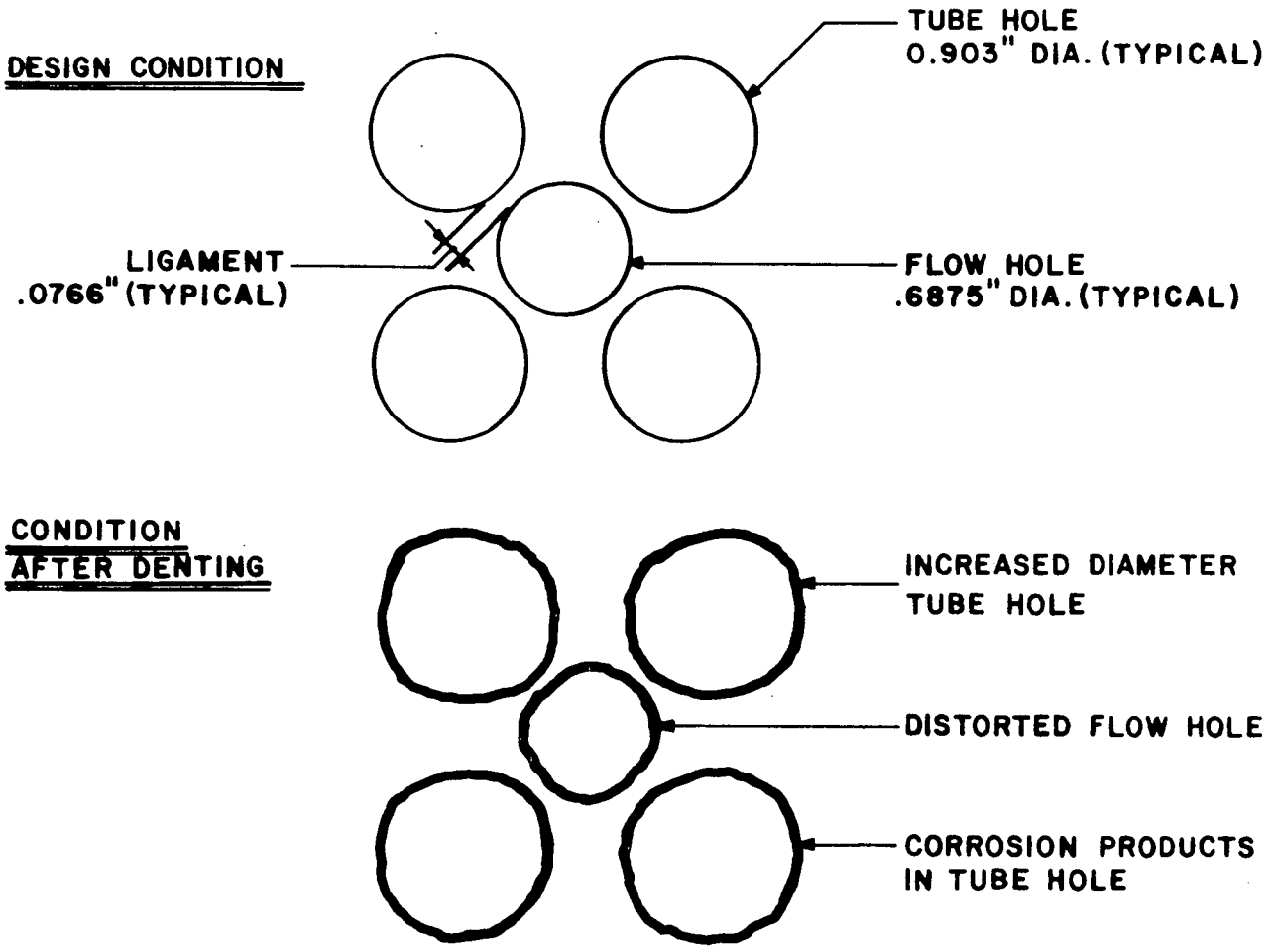

NOTE: SOME UTILITIES HAVE REPORTED CRACKS IN LIGAMENTS BETWEEN TUBE HOLES AND FLOW HOLES.

TYPICAL DETAIL OF TUBE SUPPORT PLATE

FIGURE 3-4

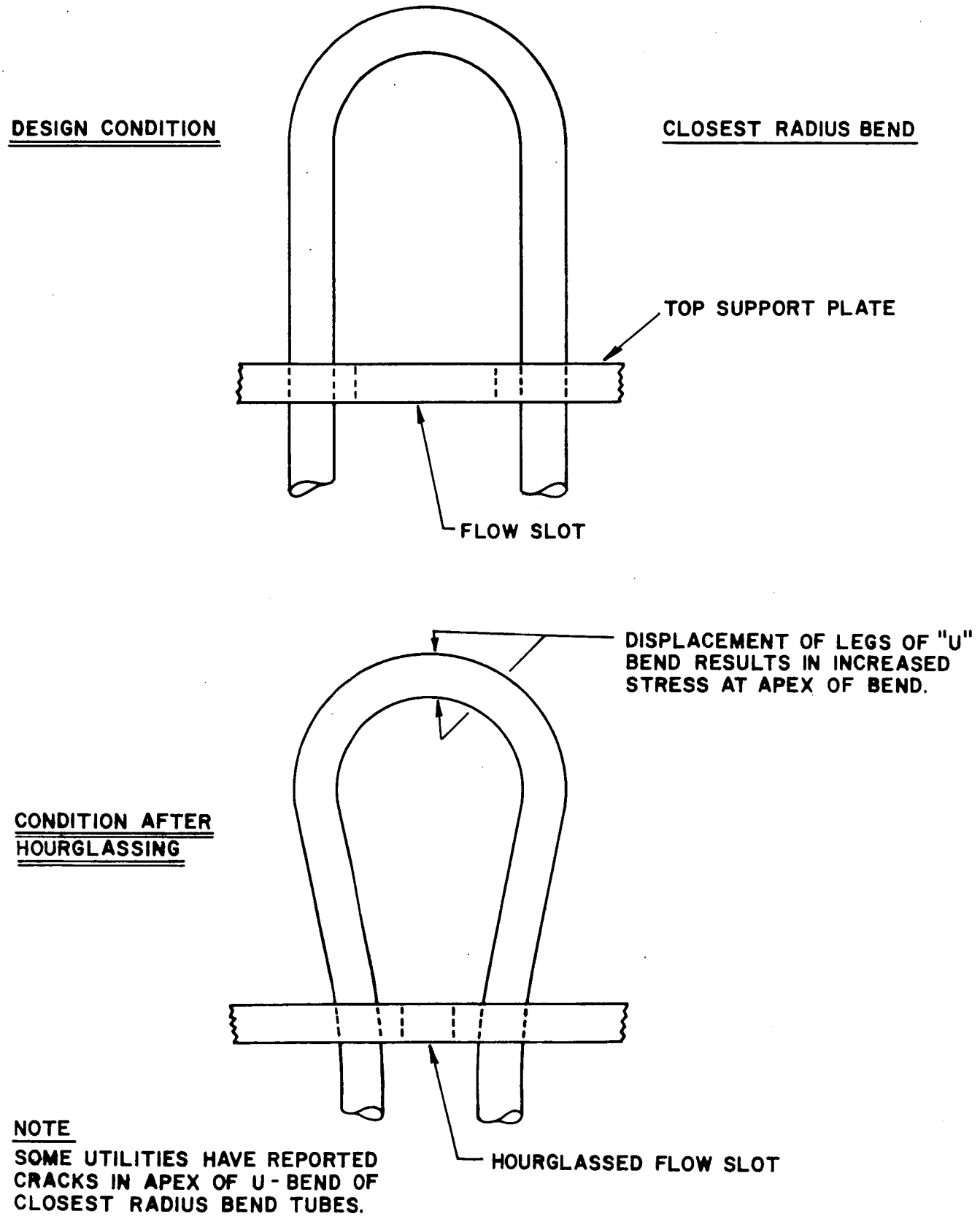

NOTE

SOME UTILITIES HAVE REPORTED CRACKS IN APEX OF U-BEND OF CLOSEST RADIUS BEND TUBES.

STEAM GENERATOR TUBE DEFORMATION AS A RESULT OF HOURGLASSING

FIGURE 4-1

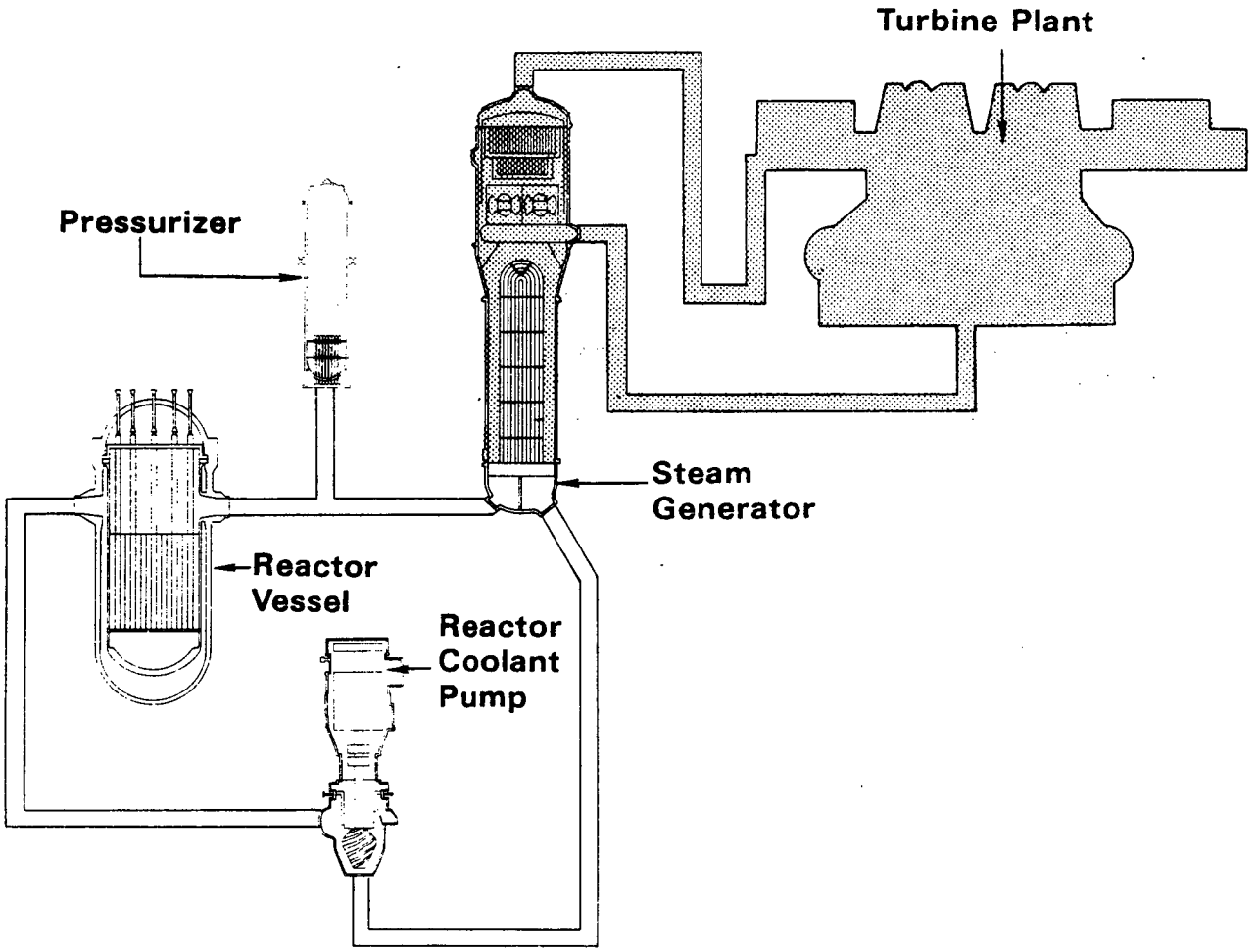

ILLUSTRATION OF ONE LOOP OF
A PWR REACTOR COOLANT SYSTEM

FIGURE 4-2

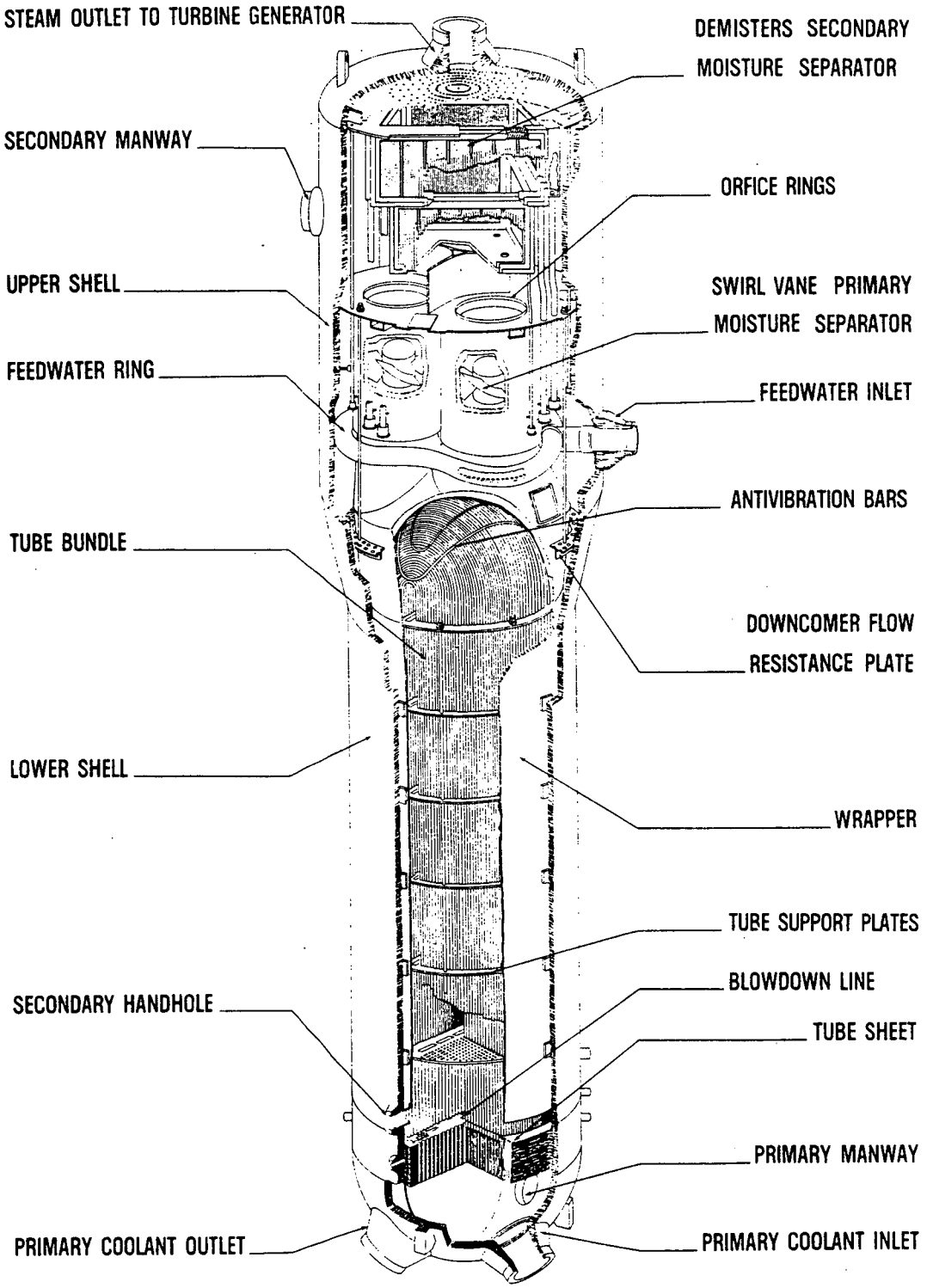

WESTINGHOUSE STEAM GENERATOR

FIGURE 4-3

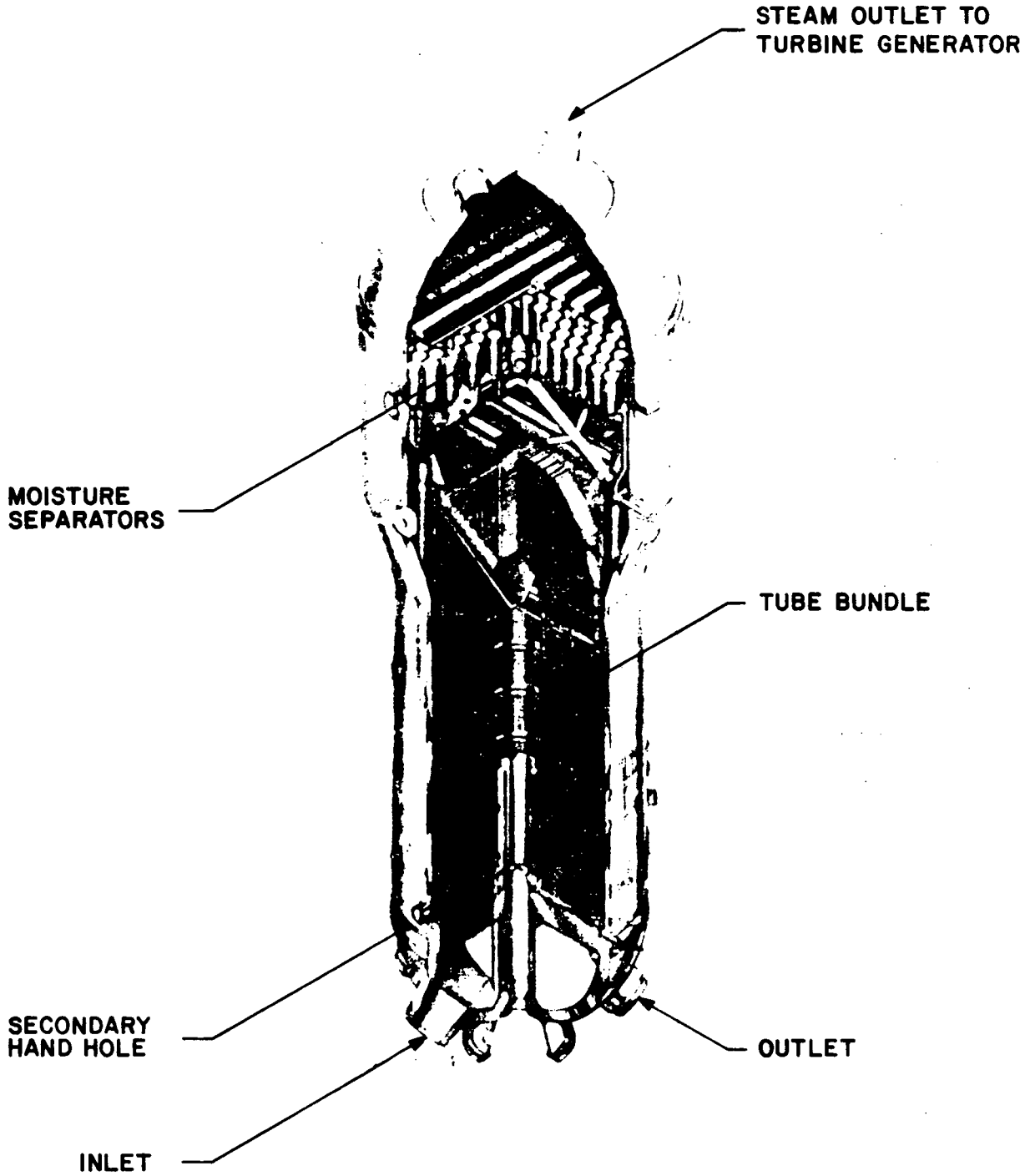

TYPICAL COMBUSTION ENGINEERING
STEAM GENERATOR

FIGURE 4-4

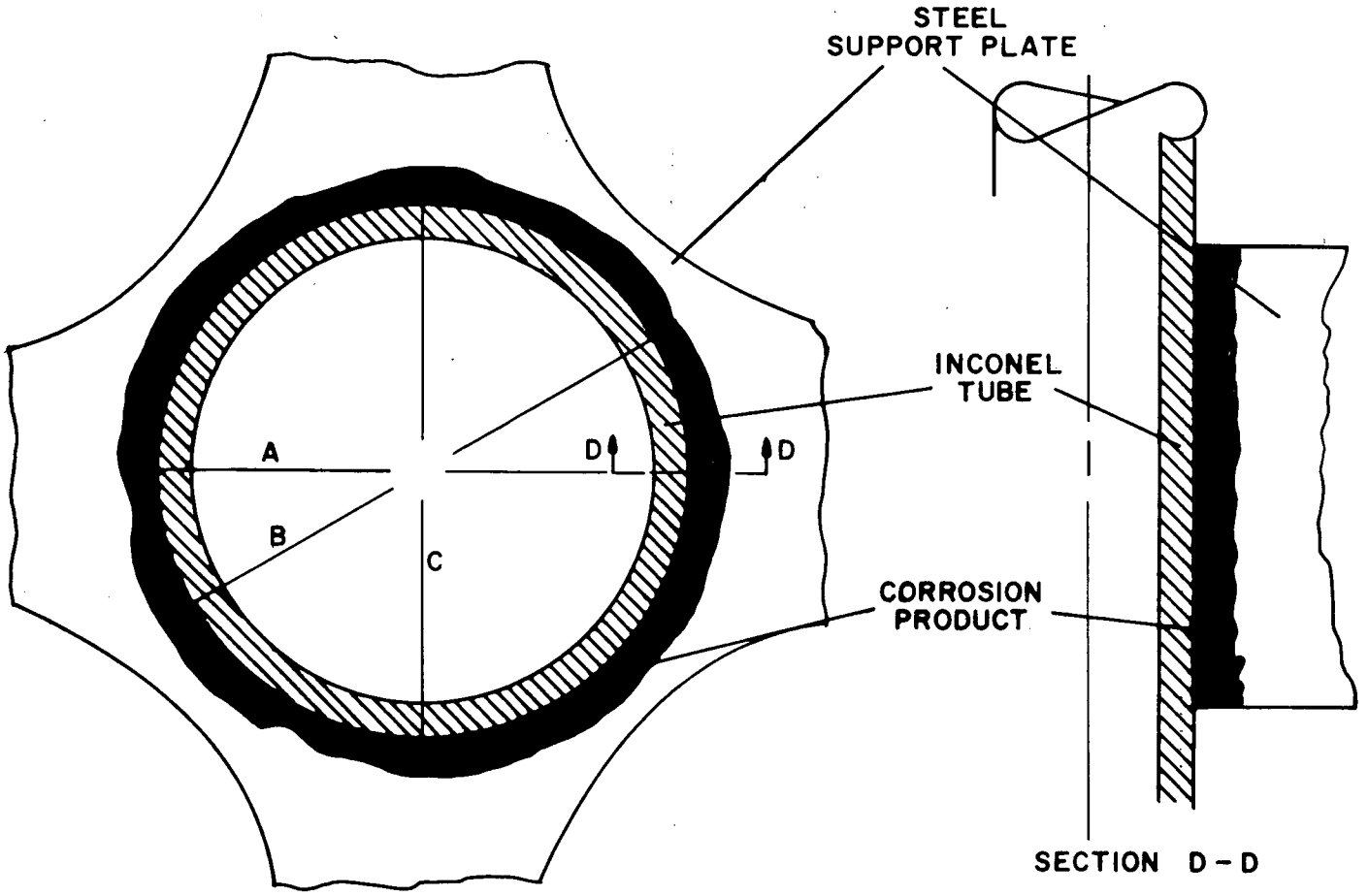

ACTUAL DIMENSIONS

DIA.	TUBE I.D.	DIA. TUBE HOLE	TUBE TO TUBE HOLE CLEARANCE
A	0.717"	0.964"	.063"/.060"
B	0.735"	0.949"	.062"/.051"
C	0.754"	0.968"	.050"/N.A.
DESIGN	0.775"	0.903"	0.014"

CORROSION PRODUCT COMPOSITION

MAJOR	IRON	69.5%	
	MANGANESE	0.05%	
	COPPER	0.2%	
	NICKEL	0.2%	
MINOR	CALCIUM, CHLORINE, CHROMIUM, MAGNESIUM,		
	PHOSPHORUS, SILICON, SODIUM, SULFUR,		
	TITANIUM, ZINC		

SECTIONS OF DENTED TUBE SUPPORT PLATE AS REMOVED FROM A SIMILAR STEAM GENERATOR AT ANOTHER UTILITY'S PLANT

FIGURE 4-5

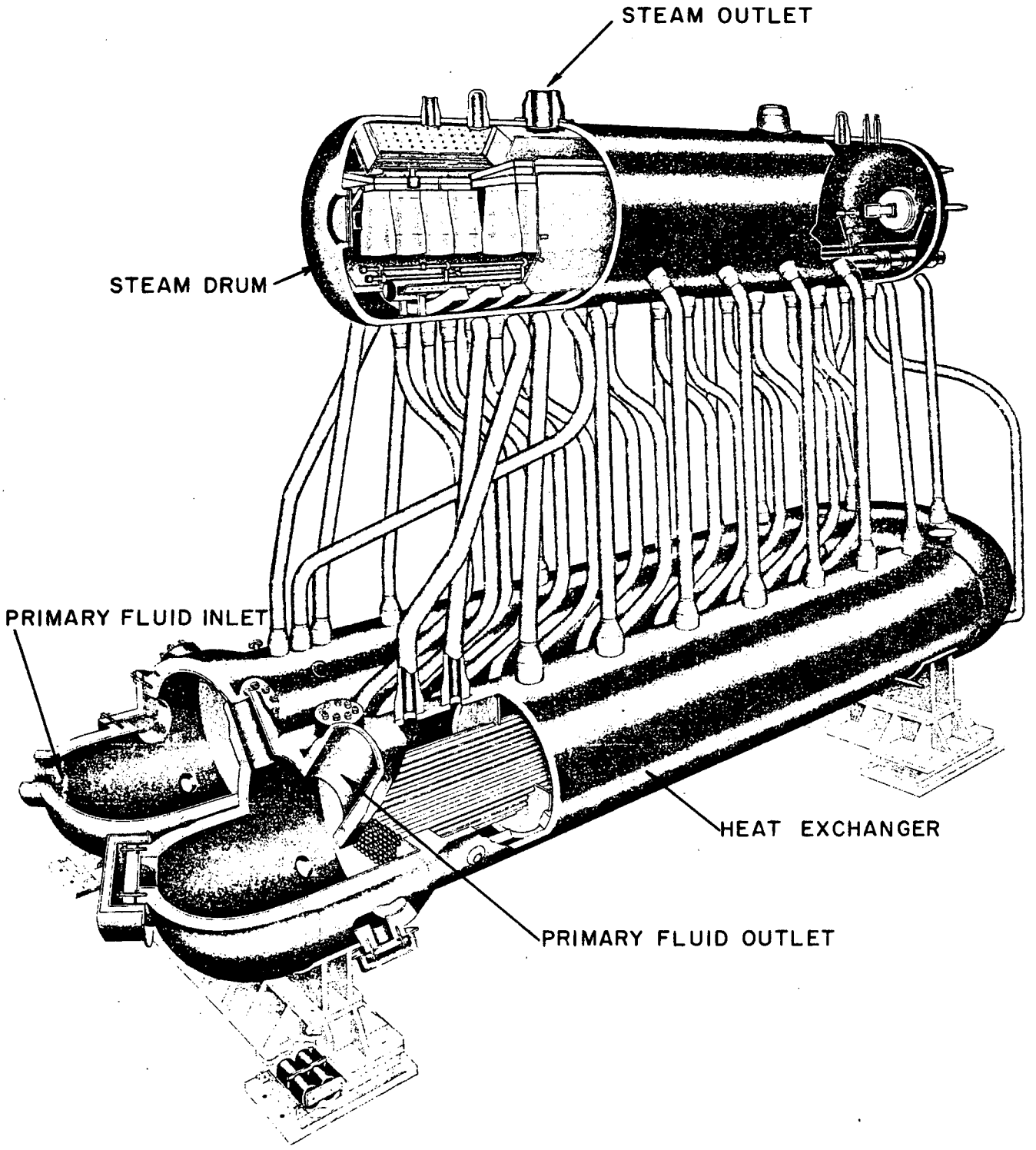

INDIAN POINT Nº I STEAM GENERATOR

FIGURE 6-1

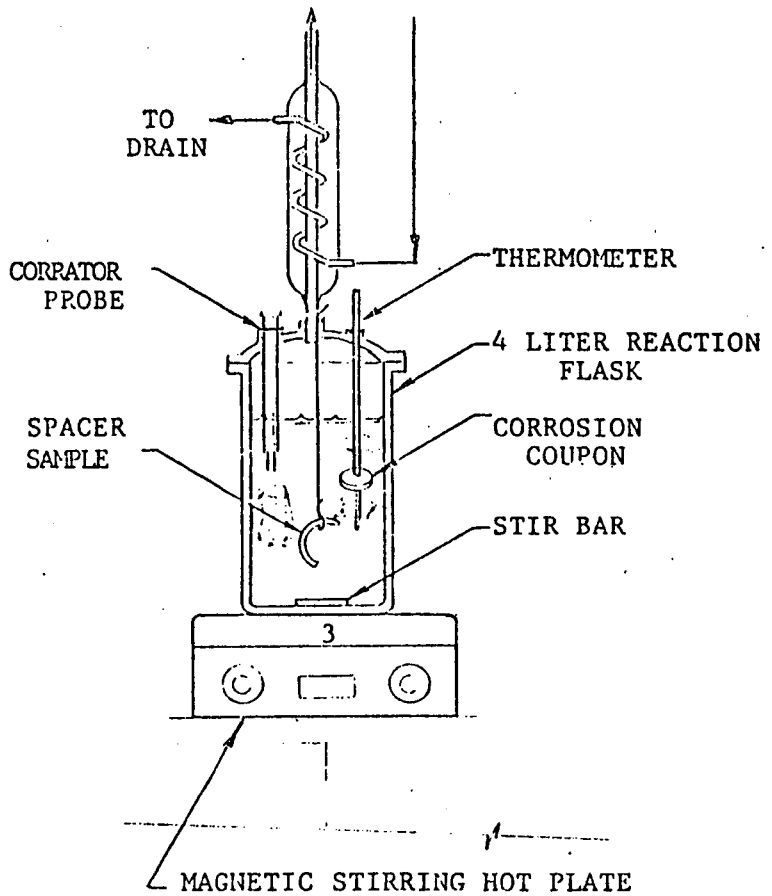

UNITED NUCLEAR INDUSTRIES

ATOMSPHERIC PRESSURE TEST ARRANGEMENT

FIGURE 6-2

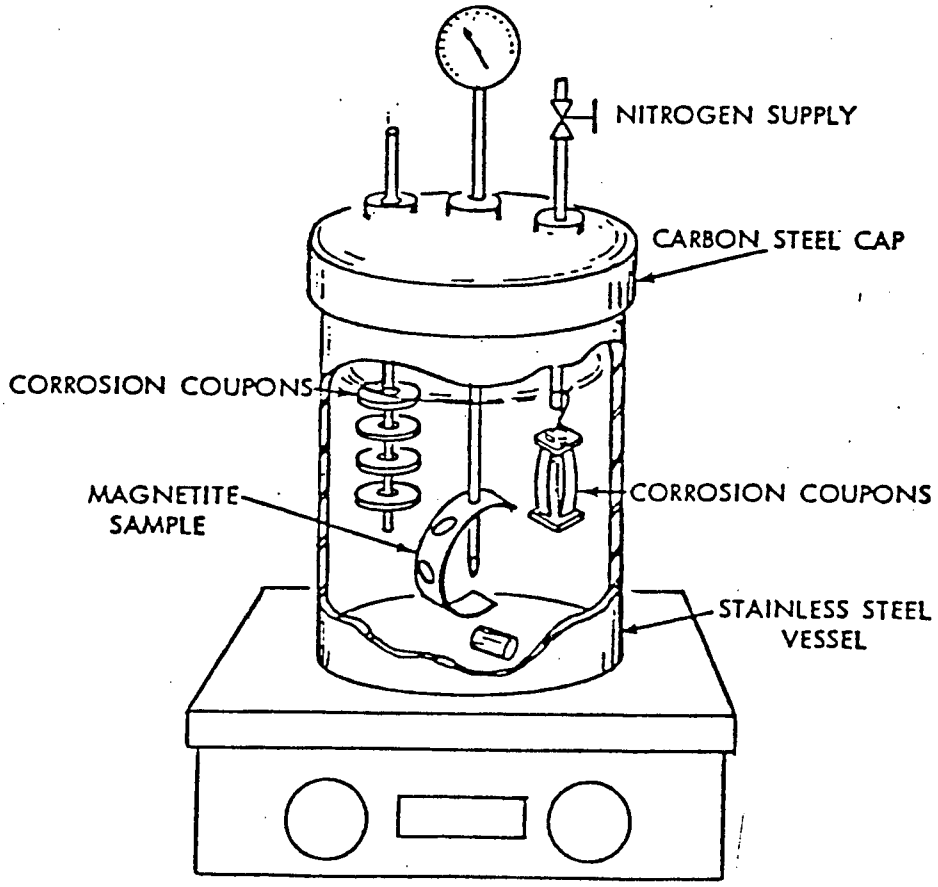

UNITED NUCLEAR INDUSTRIES
AUTOCLAVE TEST ARRANGEMENT

FIGURE 6-3

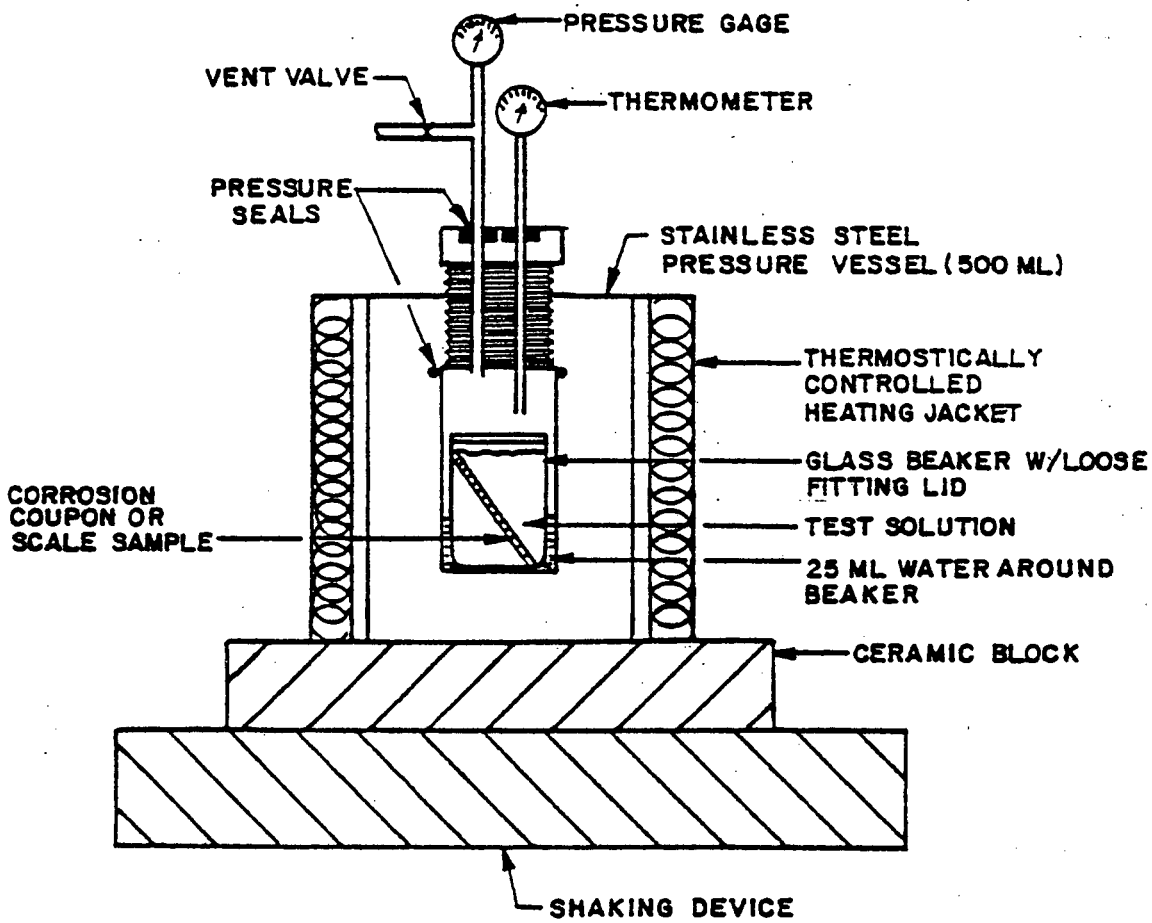

HALLIBURTON SERVICES

AUTOCLAVE TEST ARRANGEMENT

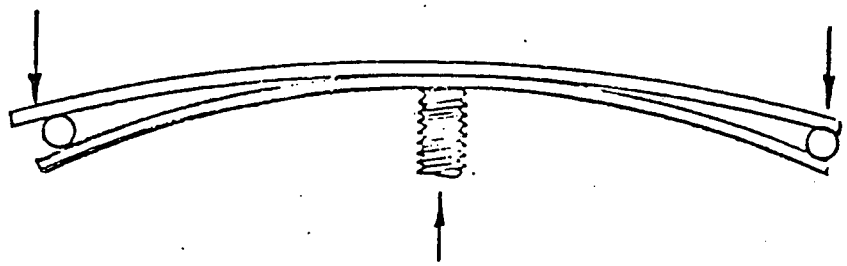

DETAIL A
CREVICE COUPONS SHOWING
VARIABLE CREVICE

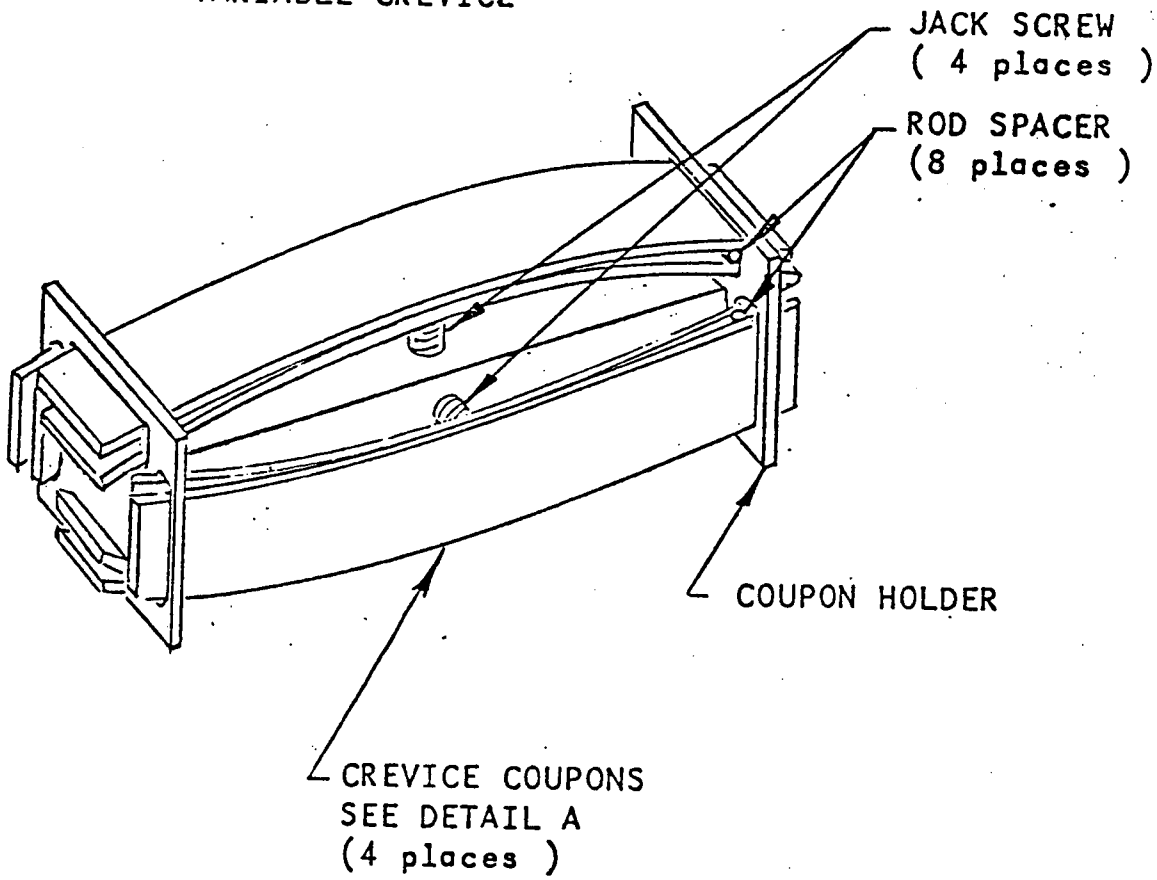

CREVICE STRESS COUPON ASSEMBLY

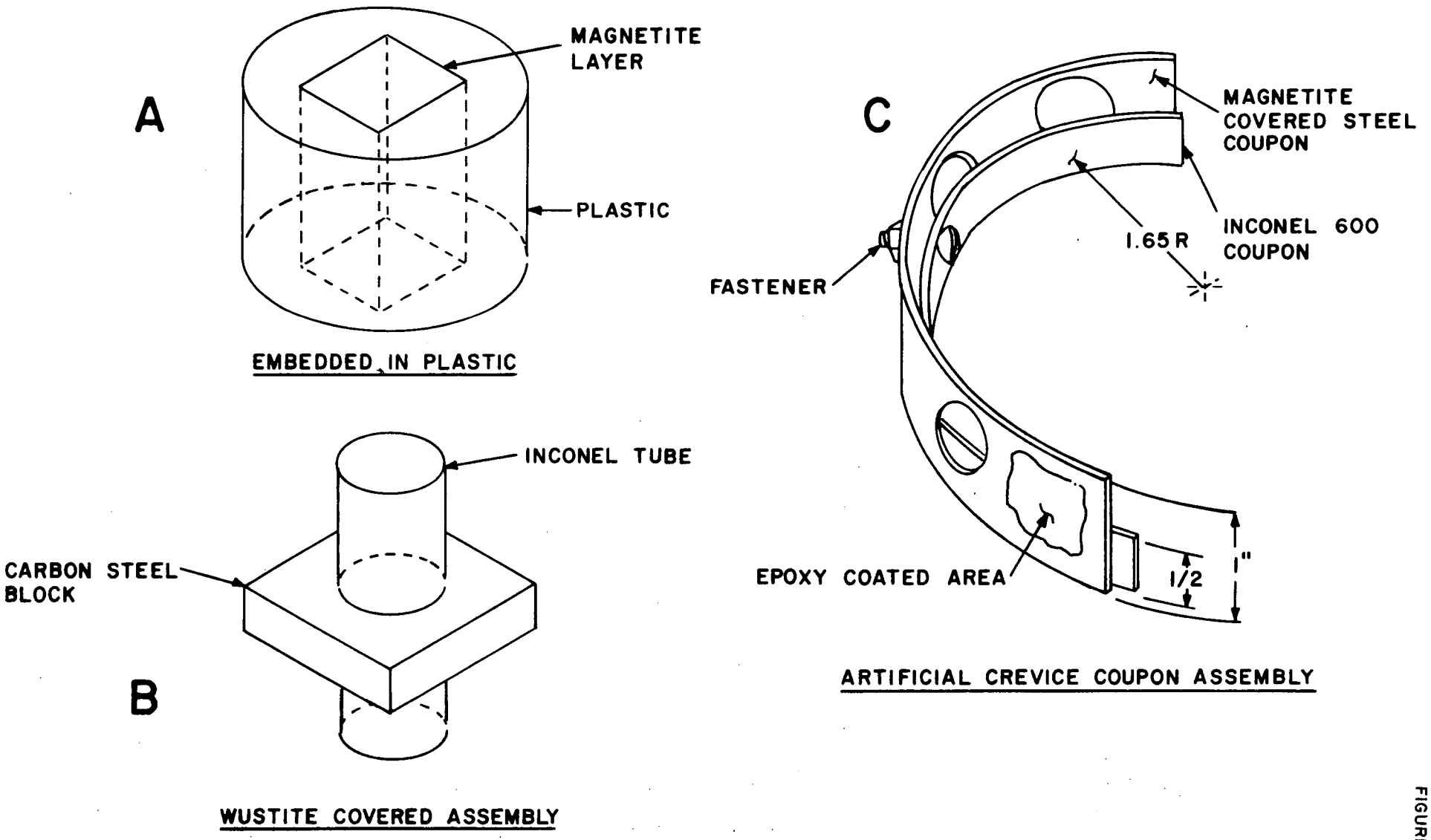

MAGNETITE-COATED SPECIMENS

FIGURE 6-5

FIGURE 6-6

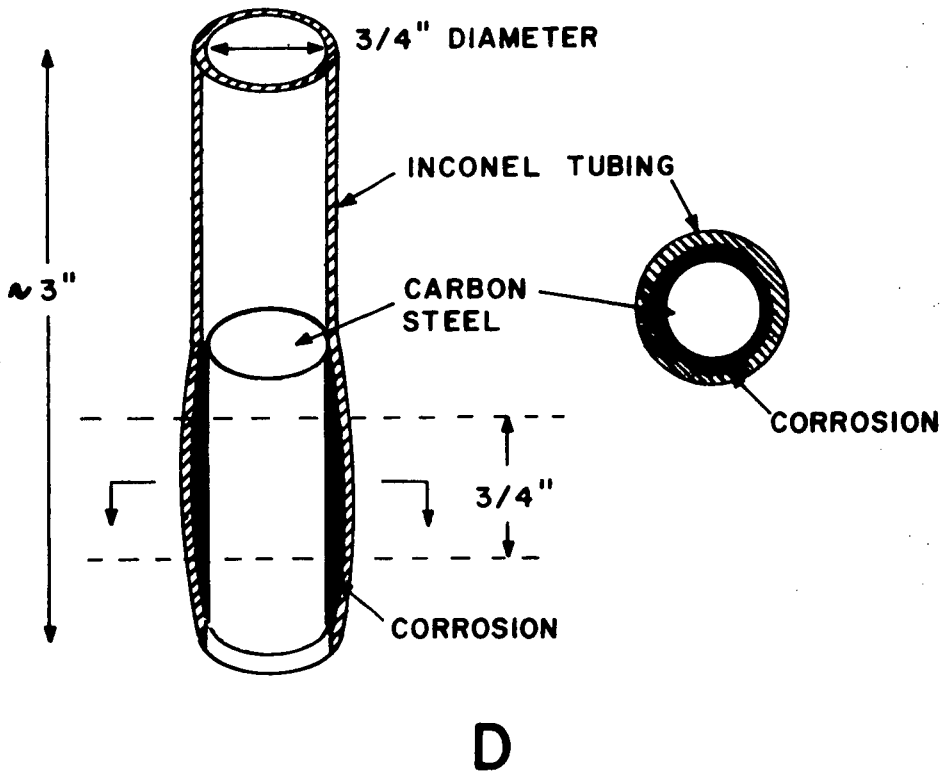

WESTINGHOUSE REVERSE DENT.

FIGURE 7-1

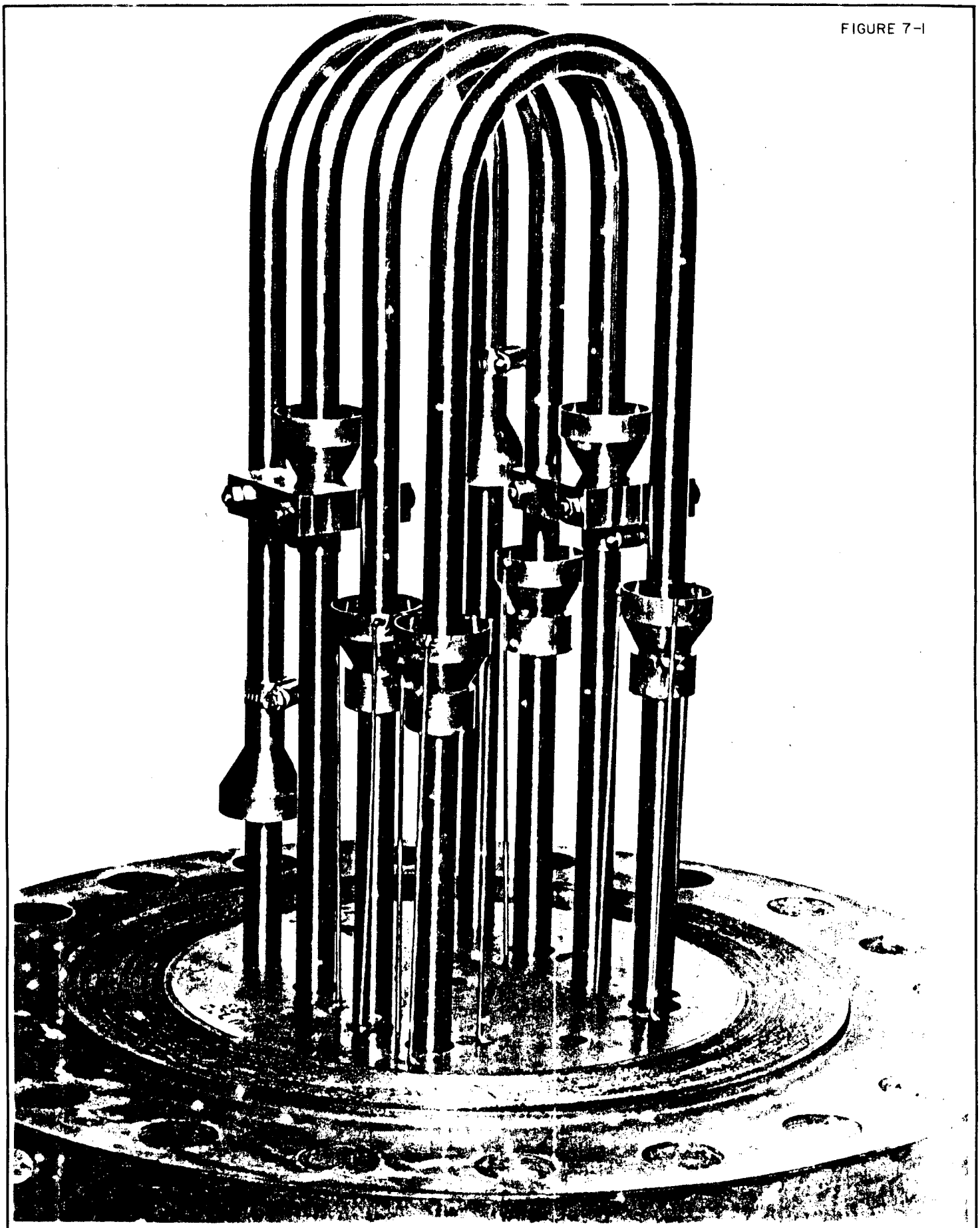

BUNDLE OF POT BOILER USED IN HALLIBURTON SERVICES TEST

FIGURE 7-2

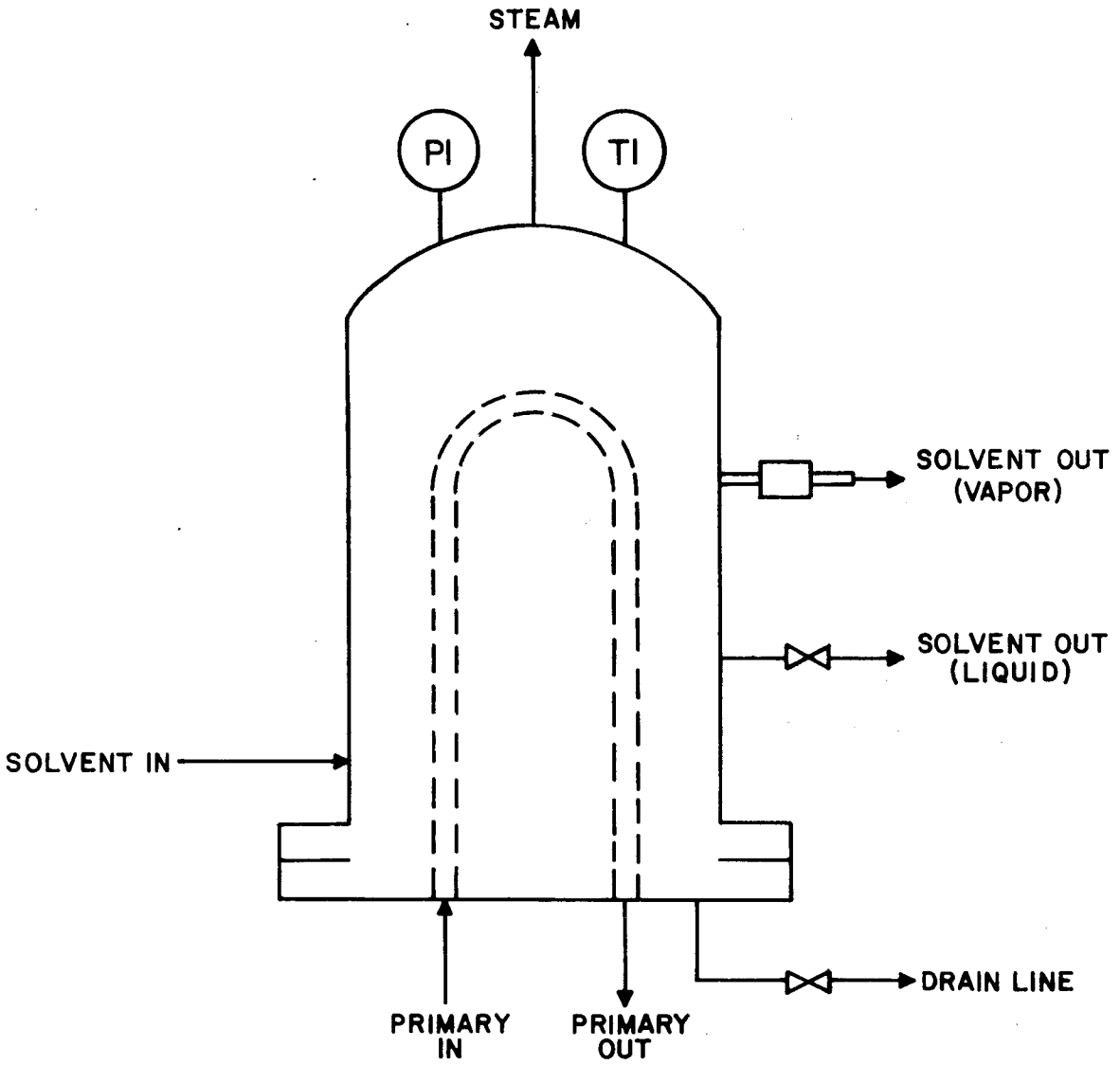

SCHEMATIC PIPING ARRANGEMENT FOR POT BOILER TESTS

FIGURE 7-3

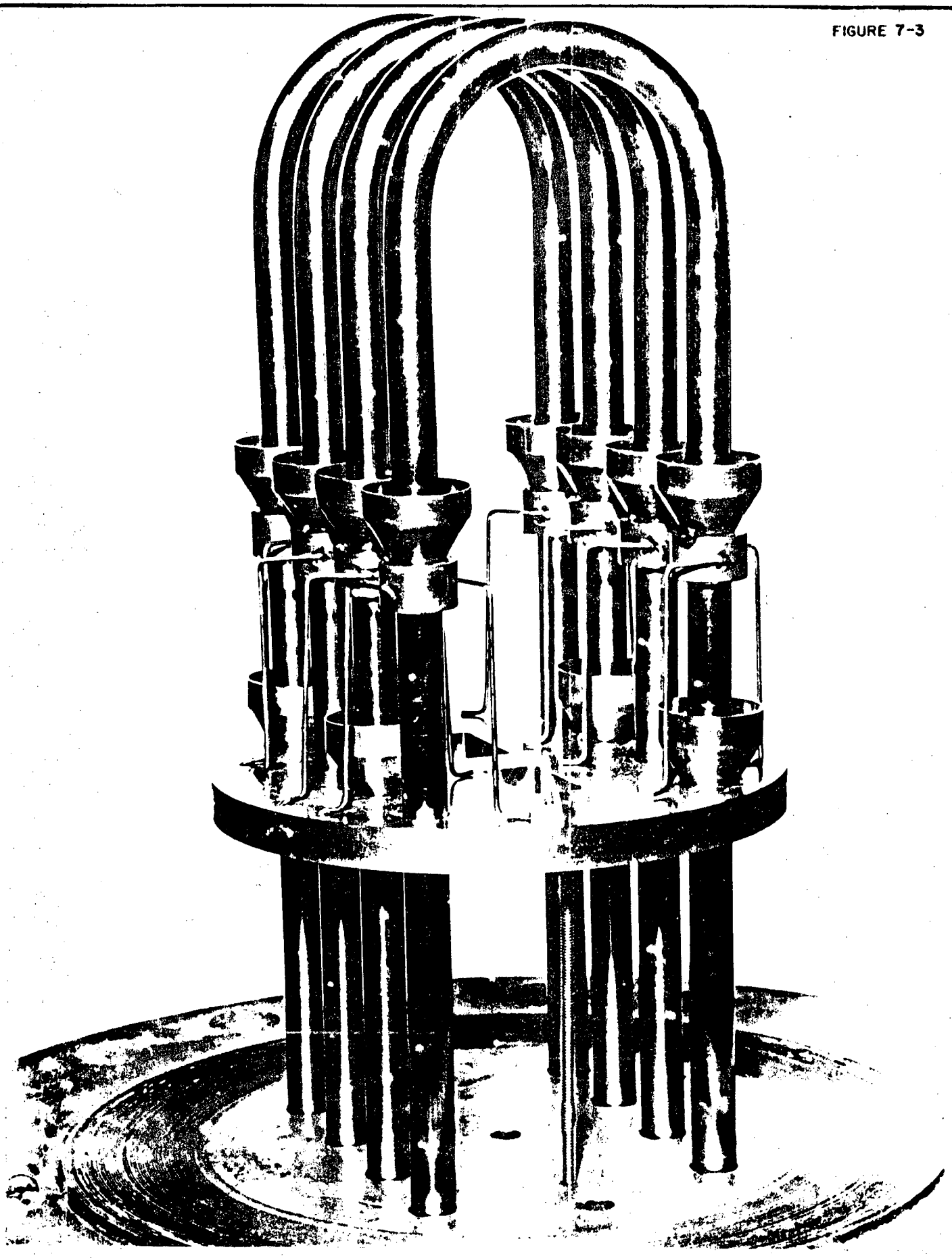

BUNDLE OF POT BOILER USED IN UNITED NUCLEAR INDUSTRIES TEST

FIGURE 8-1

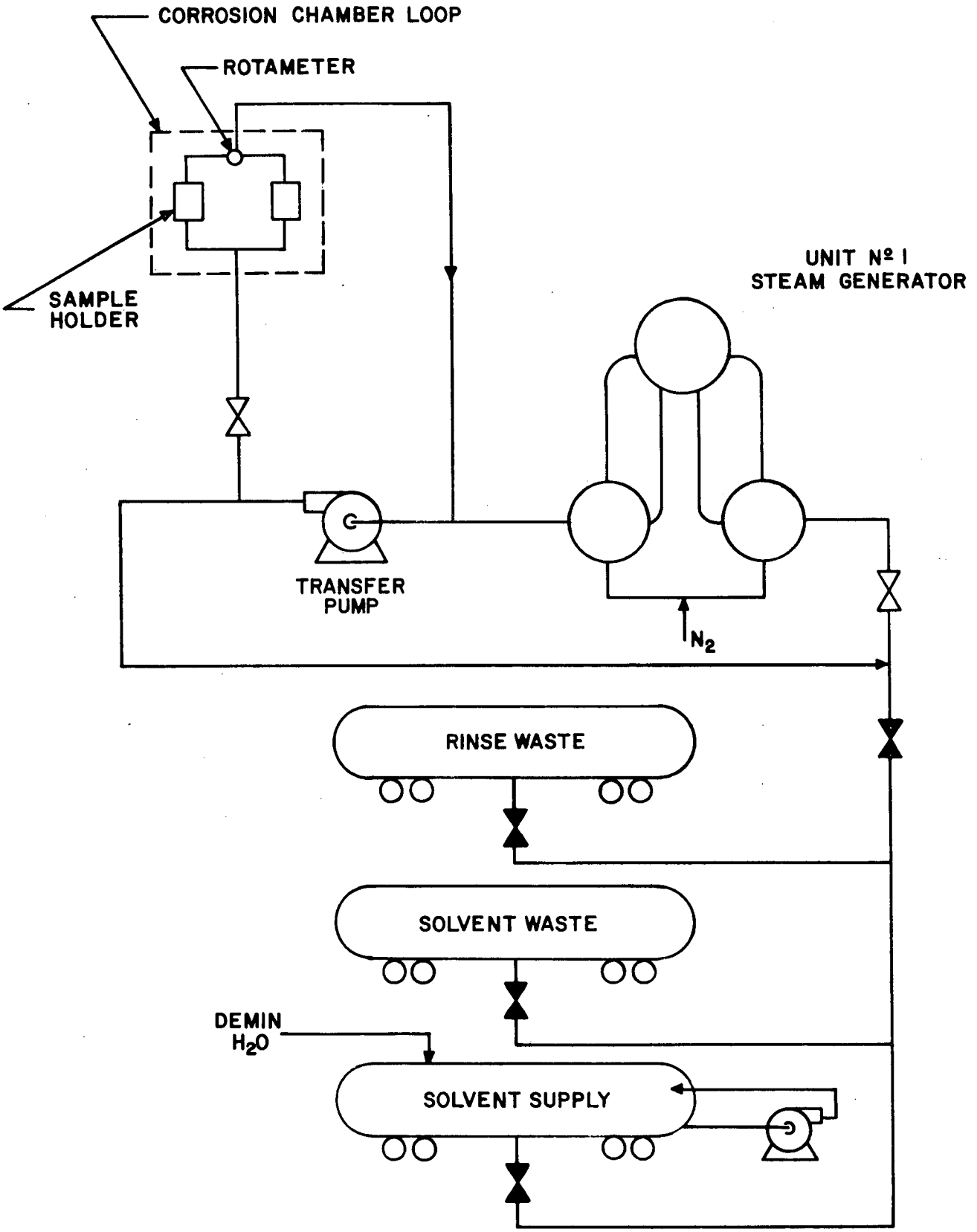

INDIAN POINT UNIT Nº 1

CHEMICAL CLEANING OUT-OF-PLANT SOLVENT SUPPLY

(HALLIBURTON SERVICES PIPING ARRANGEMENT)

FIGURE 8-2

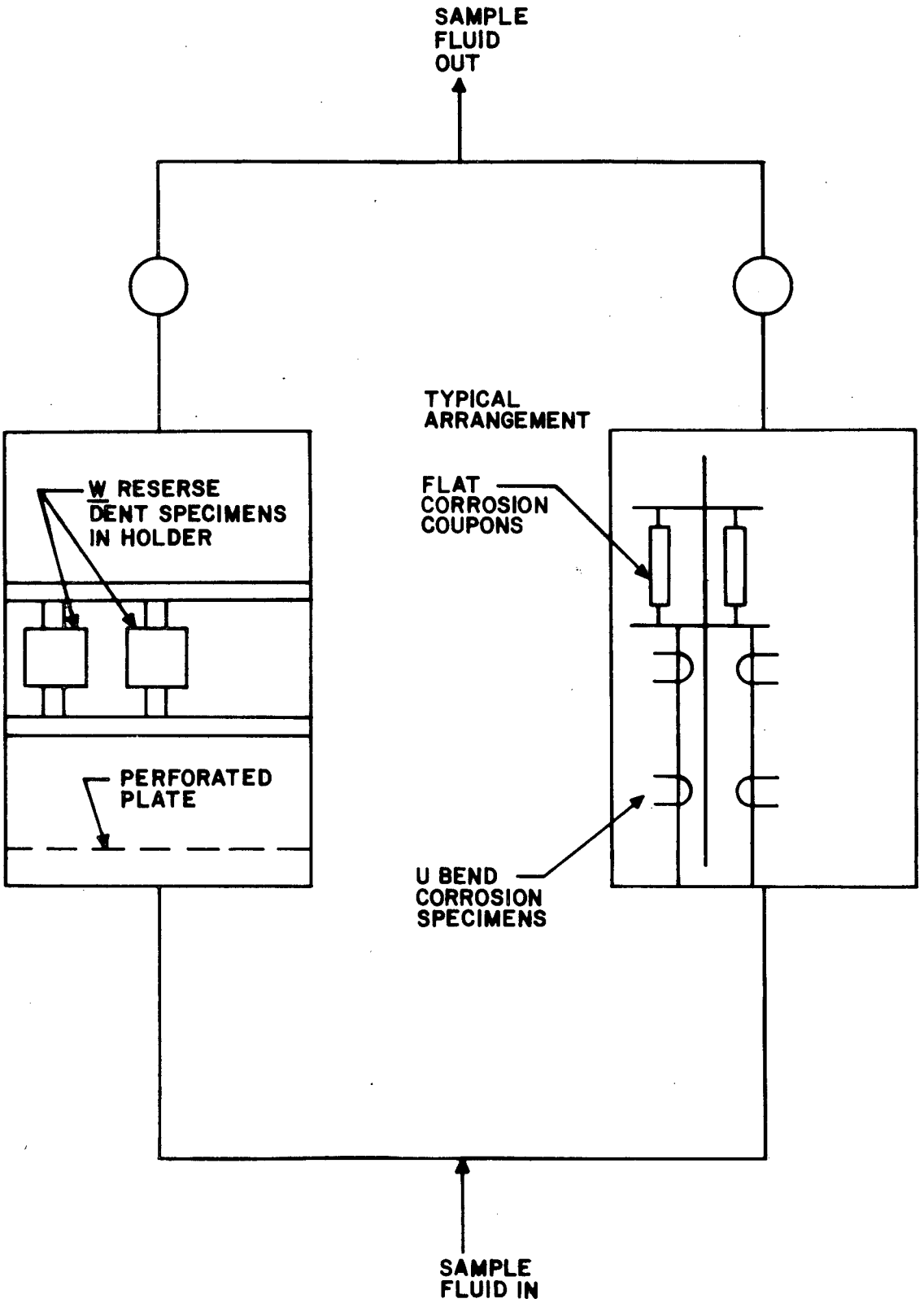

CORROSION CHAMBER DETAILS

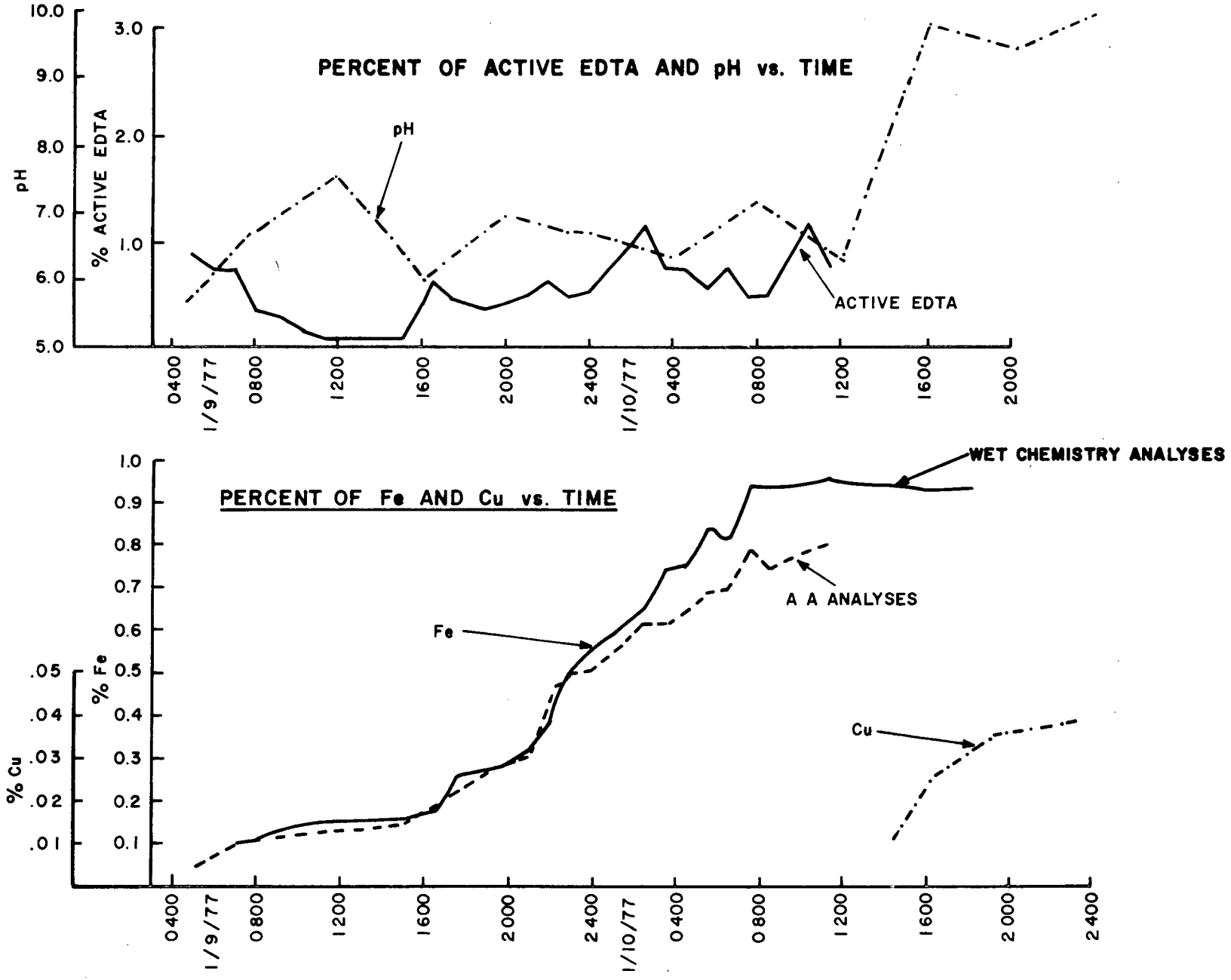

SLUDGE REMOVAL STEP
(HALLIBURTON SERVICES PILOT TEST)

FIGURE 8.3

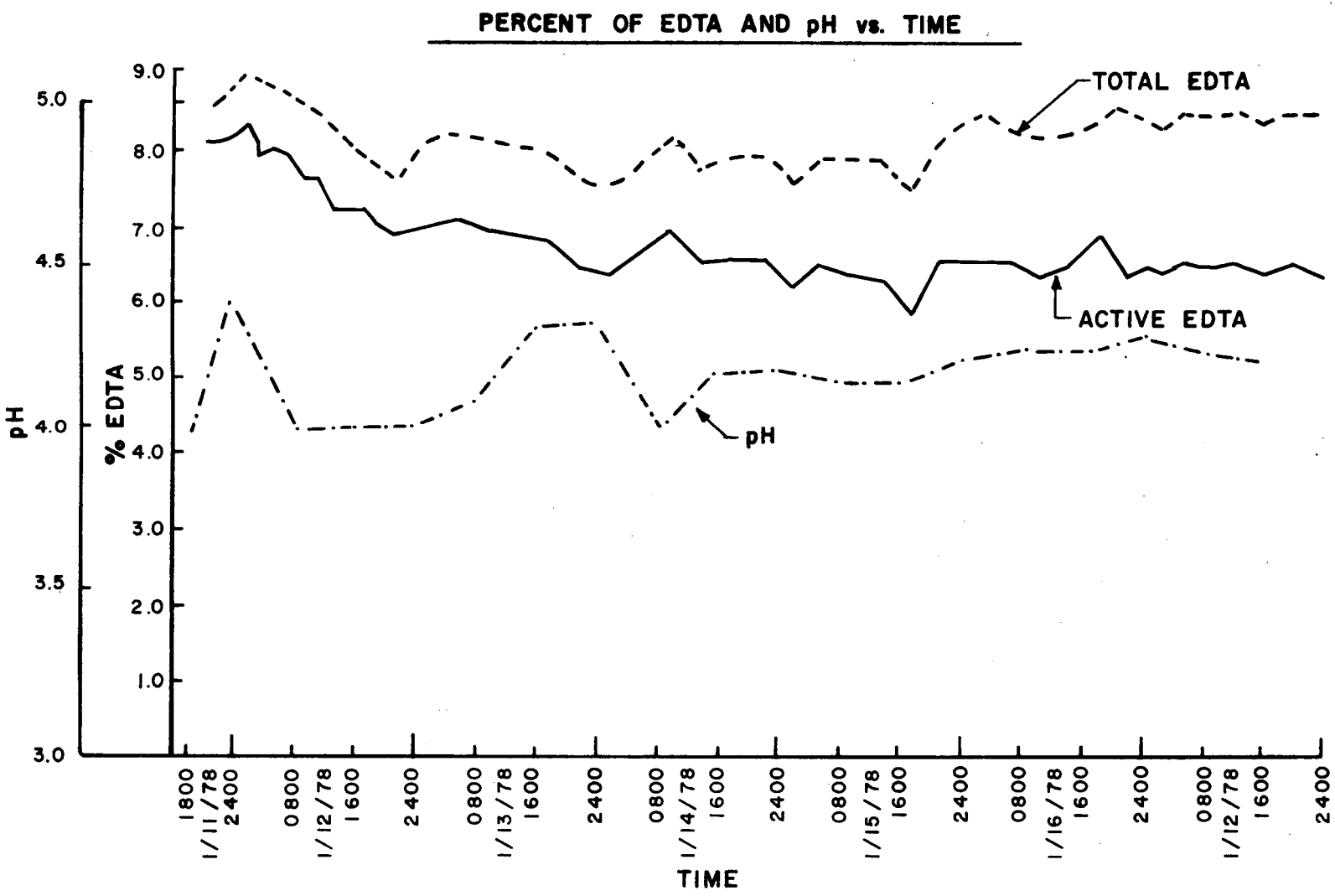

CREVICE CLEANING STEP

(HALLIBURTON SERVICES PILOT TEST)

FIGURE 8.4A

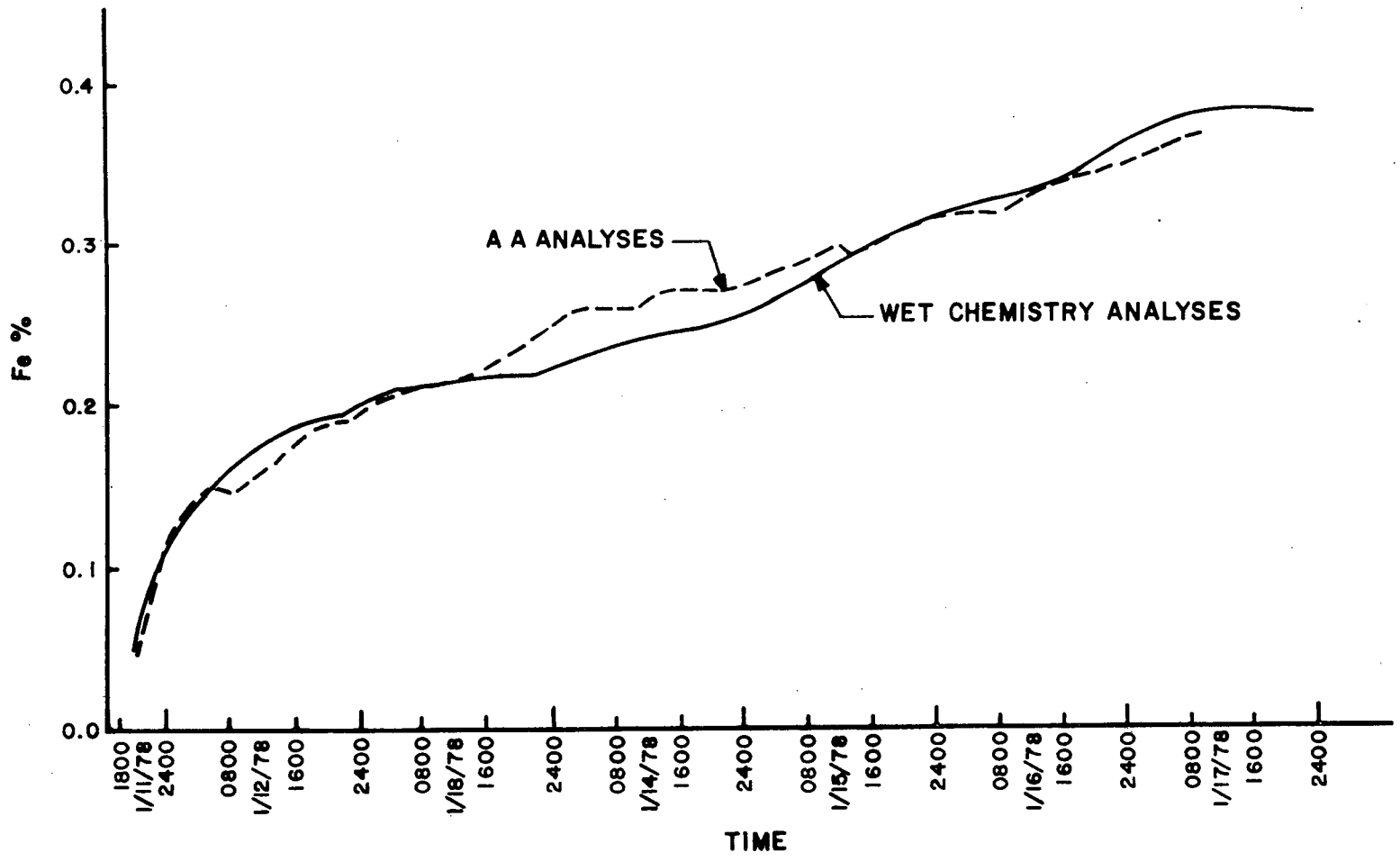

CREVICE CLEANING STEP

(PERCENT OF Fe vs TIME)

FIGURE 8-4B

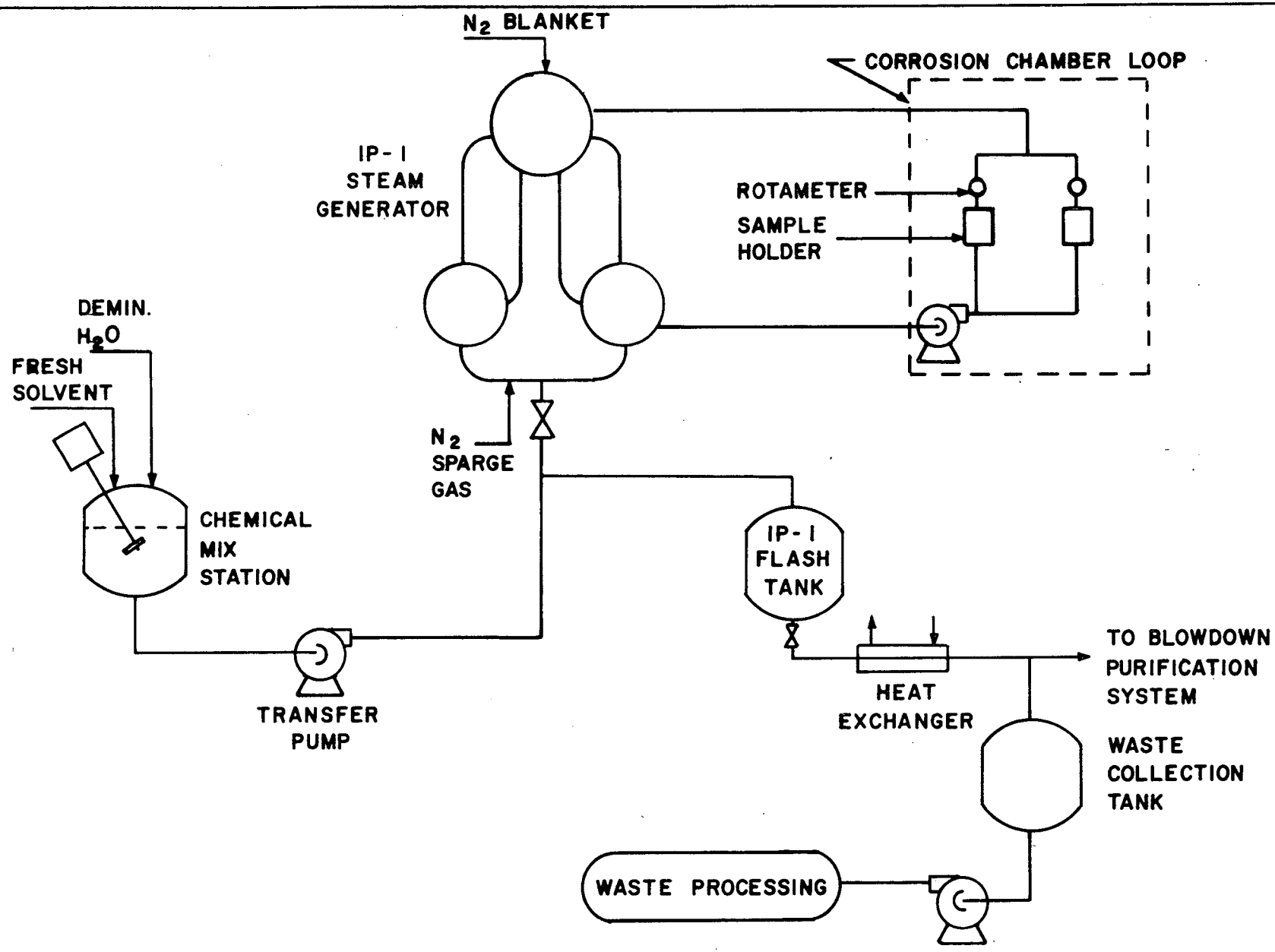

INDIAN POINT UNIT No. 1
CHEMICAL CLEANING IN-PLANT SOLVENT SUPPLY
(UNITED NUCLEAR INDUSTRIES PIPING ARRANGEMENT)

FIGURE 8-5

FIGURE 8-6

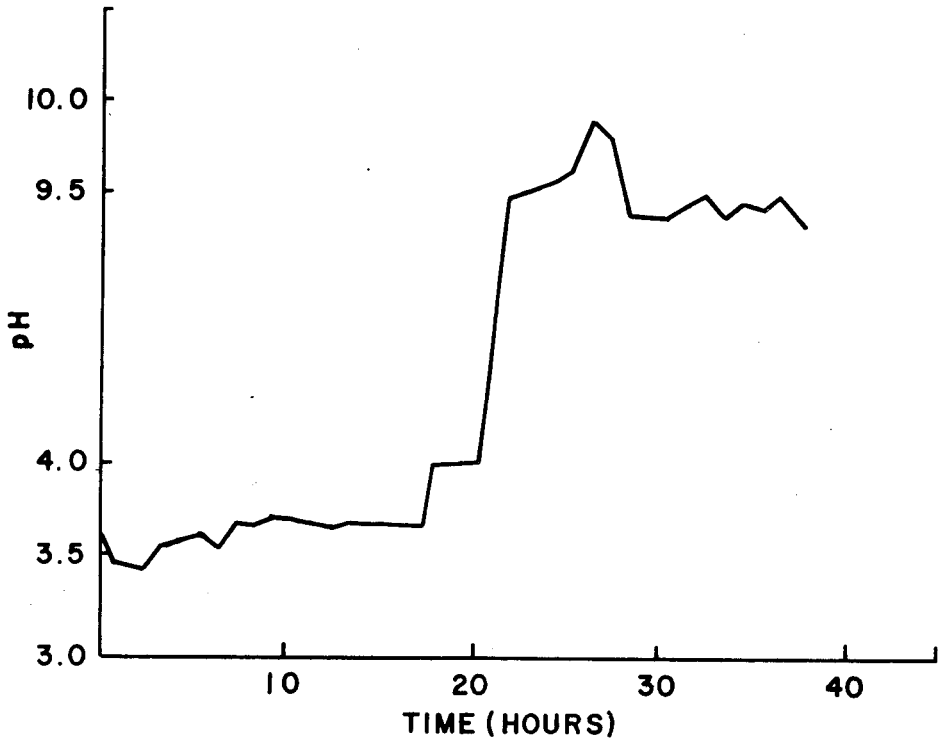

pH vs. TIME

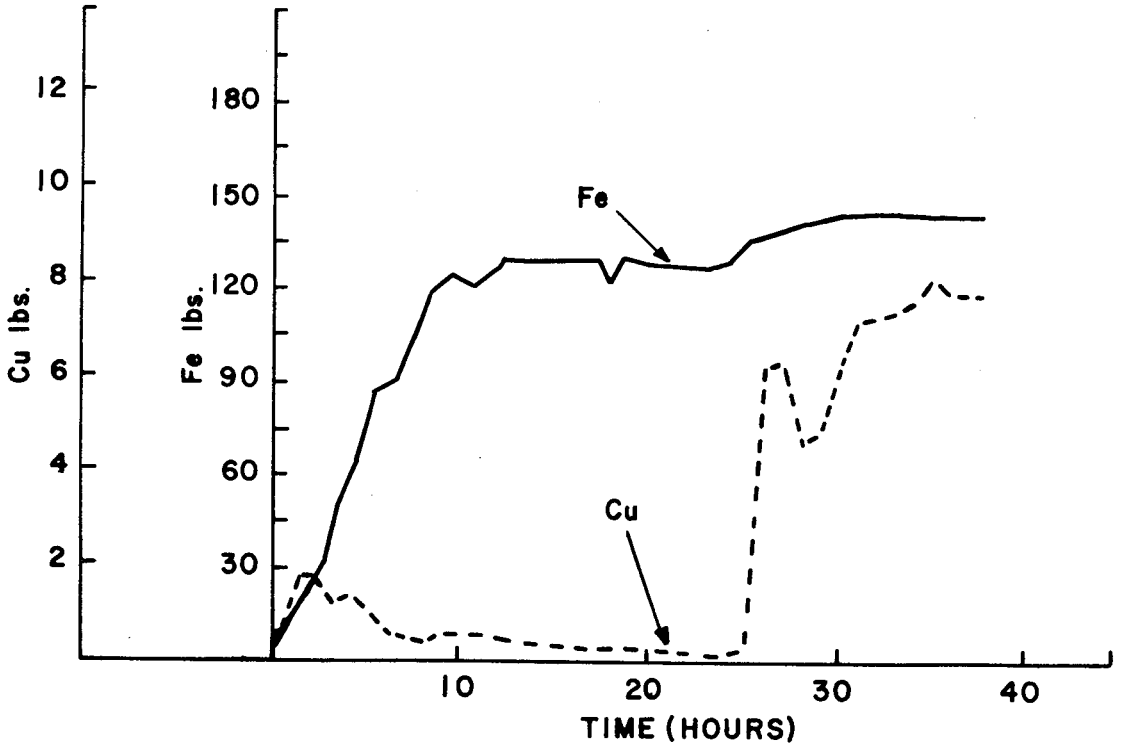

TOTAL Fe AND Cu vs. TIME

SLUDGE REMOVAL STEP

UNITED NUCLEAR INDUSTRIES PICOT TEST

FIGURE 8-7

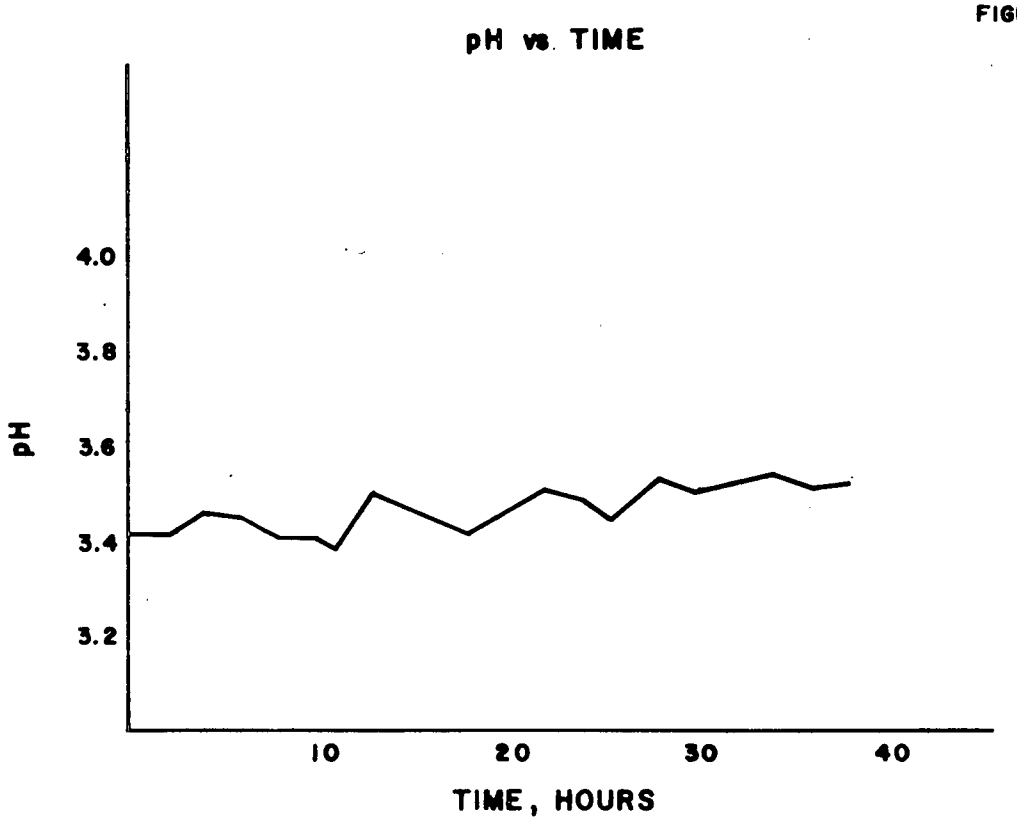

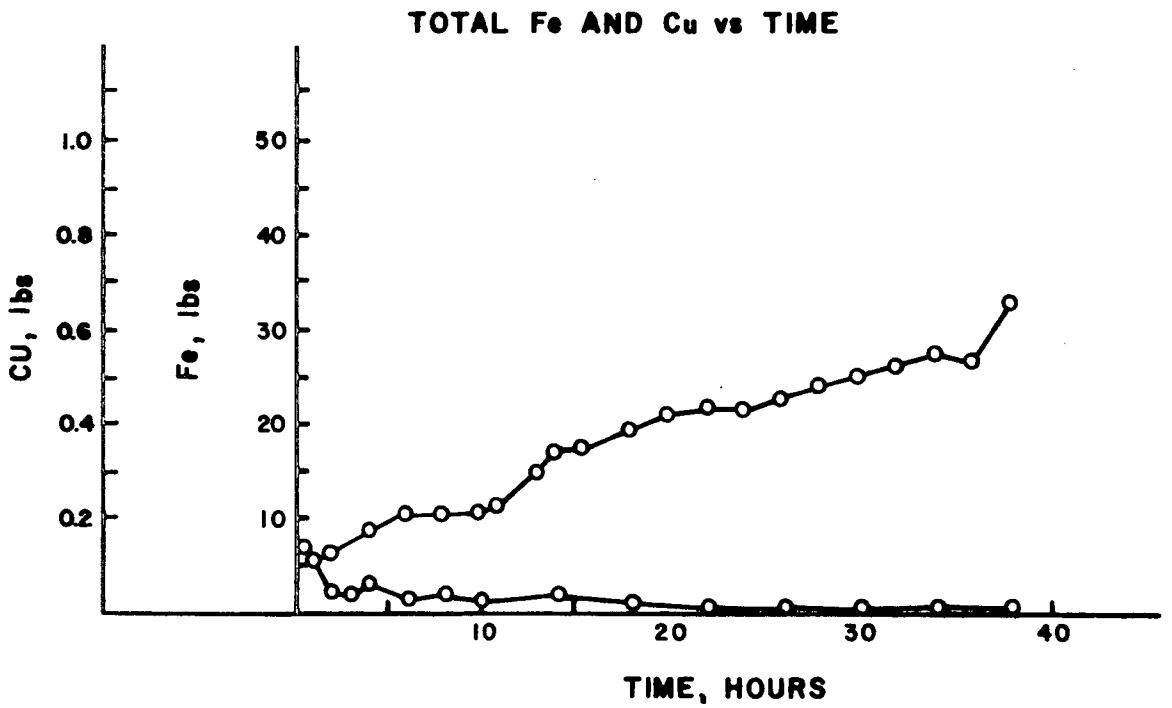

FIRST CREVICE CLEANING STEP

UNITED NUCLEAR INDUSTRIES PILOT TEST

FIGURE 8-8

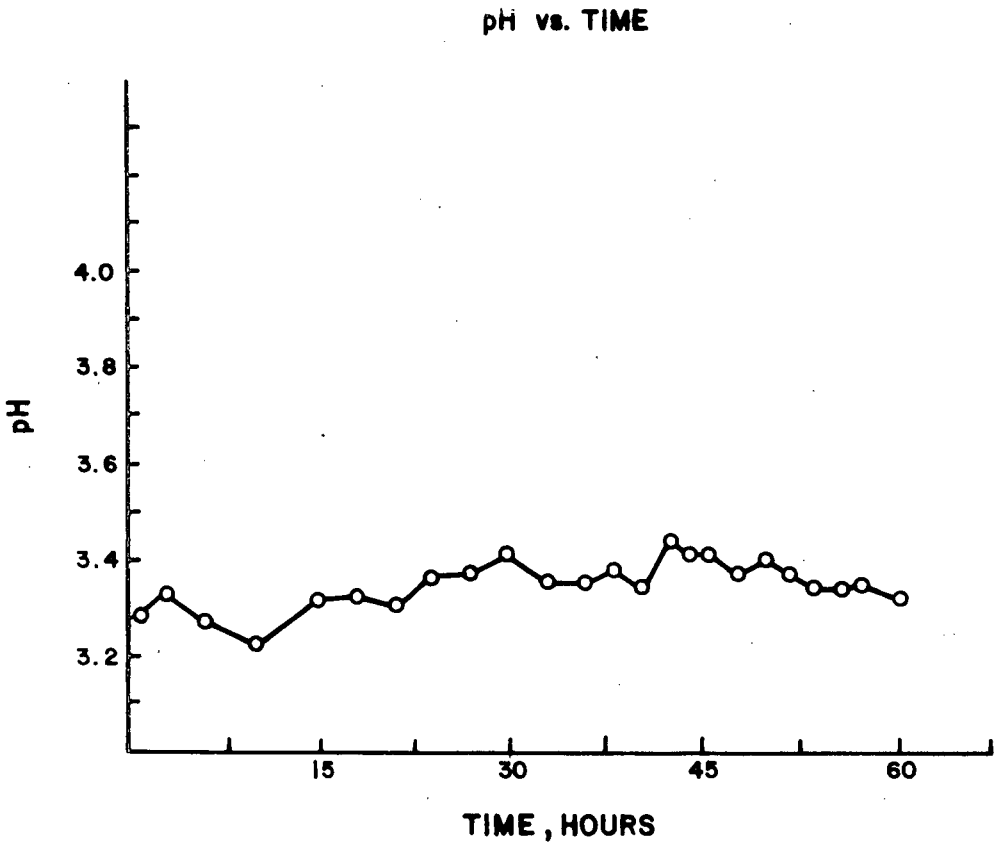

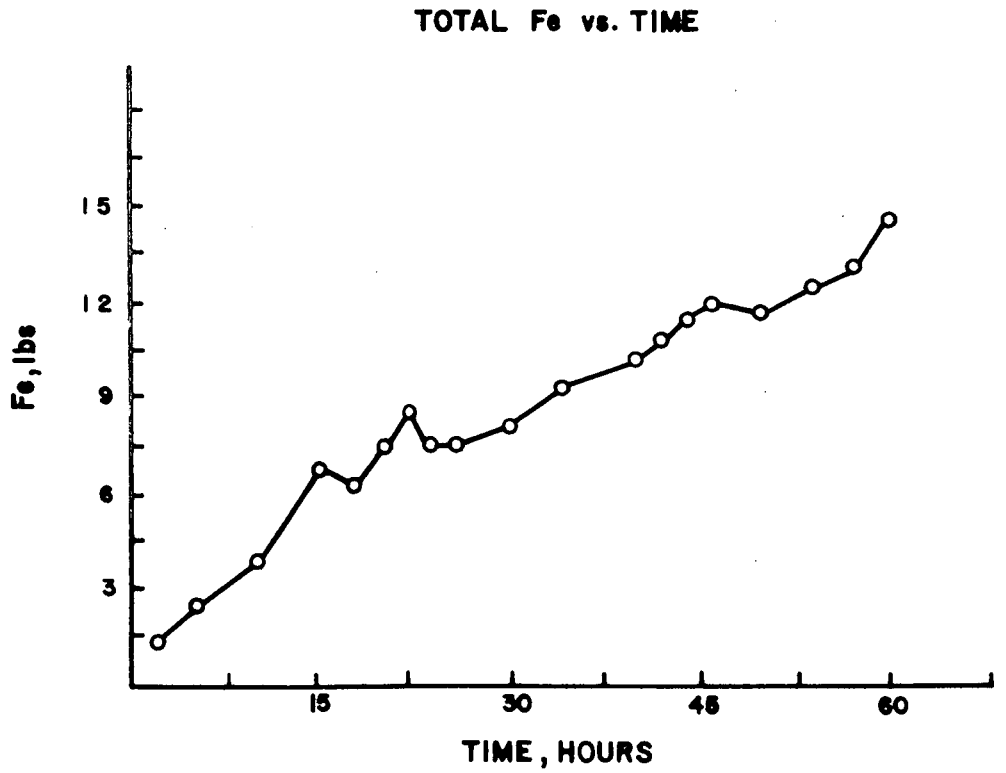

SECOND CREVICE CLEANING STEP
UNITED NUCLEAR INDUSTRIES PILOT TEST

PWR STEAM GENERATOR CHEMICAL CLEANING
PHASE I FINAL REPORT
SOLVENT AND PROCESS DEVELOPMENT

APPENDIX A - HALLIBURTON SERVICES SCOPE OF WORK

HALLIBURTON SCOPE OF WORK

STEAM GENERATOR SECONDARY SIDE CHEMICAL CLEANING

OBJECTIVE

Recently several PWR's have experienced steam generator tube leakage at support plates because of a condition called "tube denting", which results from the corrosion expansion of tube support plates.

The objective of this subcontract is to develop method(s) to chemically clean the secondary side of the steam generators of Indian Point 1 and Indian Point 2 PWR plants as part of an ERDA sponsored demonstration program to improve PWR plant maintenance and availability. Phase I contains tasks, related to both Indian Point 1 & 2. Phase II covers the demonstration cleaning of the four Indian Point Unit No. 2 Steam Generators. Two Subcontractors have been selected for parallel development through the cleaning of one steam generator at Indian Point Unit No. 1. If development efforts are successful, demonstration at Indian Point No. 2 would be carried out by either Halliburton or the other Subcontractor at the option of Con Edison.

PHASE I

Halliburton (herein after Subcontractor) shall perform the following tasks during Phase I:

1. Provide technical services to evaluate chemical cleaning solvents and procedures to be used in cleaning the secondary side of the steam generators at Indian Point 1 and Indian Point 2.

2. Recommend procedures for chemical cleaning.

3. Provide consulting services in the process design of facility modifications needed to accomplish both the IP #1 development test cleaning and the IP #2 full demonstration cleaning.

4. Provide specifications for Con Edison's use in <u>competitively</u> purchasing solvent (including additives) selected during Task 1 solvent evaluation.

5. Provide technical direction for the actual development test cleaning of a steam generator in Indian Point Unit No. 1.

6. Report results.

PHASE II consists of the following tasks and will be performed under this subcontract or under the Phase I parallel Subcontract, at the option of Con Edison.

TASKS

1. Update Phase I evaluations, procedures, solvent specifications and process design for IP #2 demo, based on results of IP #1 development test(s), and data available at that time from EPRI funded lab studies.

2. Provide technical direction for the actual demonstration cleaning of four Indian Point Unit No. 2 Steam Generators.

3. Report results.

WORK DESCRIPTION - The following further defines the tasks:

PHASE I

Task 1 - Evaluate Chemical Cleaning Solvents and Procedures

1.1 Solvent Evaluation

Number	Composition
1	10% EDTA 1% Hydrazine NH_4OH to pH 7 0.1% OSI-1 inhibitor or equivalent
2	4.5% EDTA NH_4OH to pH 7 0.1% OSI-1 inhibitor or equivalent

1.1 Solvent Evaluation - Cont'd

Number	Composition
3	10% Citric acid 0.1% OSI-1 inhibitor or equivalent NH_4OH to pH 4 for magnetite dissolution followed by NH_4OH to pH 7.5 and 1000 ppm hydrazine for neutralization and passivation
4*	8% EDTA 4% Citric acid 0.1% OSI-1 inhibitor or equivalent NH_4OH to pH 4 for magnetite dissolution followed by NH_4OH to pH 7.5 and 1000 ppm hydrazine for neutralization and passivation
5	Proprietary Solvents, including Dow NS-4 (if available)

*In solvent 4, either 4% oxalic acid or 4% tartaric acid may be substituted for the 4% citric acid. There may be some advantage to using one of these reducing acids if the concentration of spinels, such as iron chromite or nickel ferrite, constitutes more than 5 to 10% of the total deposit.

Laboratory data indicate that the deposit to be removed is primarily magnetite (Fe_3O_4). Solvents 3 and 4 are very good solutions for the dissolution of magnetite. It is not known at this time whether the deposit is of such dense and compact crystalline structure that acidic** treatment conditions will be necessary for its solubilization. If acid conditions are necessary, then solvents 3 and 4 will have application. The disadvantages associated with solvents 3 and 4 are (1) the inherent acid pH of the solvent with the resultant higher corrosion rate and the possibility of hydrogen release and (2) the additional chemical-handling steps required in the necessary pH adjustment following magnetite dissolution. Consequently, if laboratory dissolution studies show that the deposit can be solubilized under alkaline (high pH) conditions, then either solvent 1 or solvent 2 would have application. Although there is a little copper in the crevice areas, there is a significant amount of copper in the steam

** Acidic only in the sense that low pH conditions exist.

generator sludge and this shall be considered in solvent evaluations.

1.2 Laboratory Studies

Evaluation will be based on, but not limited to, the following laboratory studies:

a. Dissolution Studies

Dissolution studies on scale samples to be supplied by Con Edison will be conducted by contacting 1 gram of the deposit with approximately 100 ml of solvent. Solvent selection shall consider the presence of copper and will include the following:

1. Ammoniated 10% EDTA, 1% hydrazine, 0.1% OSI-1 (pH = 7)
2. Ammoniated 4.5% EDTA, 0.1% OSI-1 (pH = 7)
3. Ammoniated 10% citric acid, 0.1% OSI-1 (pH = 4)
4. Ammoniated 8% EDTA, 4% citric acid, 0.1% OSI-1 (pH = 4)
5. Proprietary solvents, including Dow NS-4 (if available)

Test temperatures will range from 200° to 300° F, and the duration of the tests will be varied from 6 to 72 hours.

It is planned that 45 static dissolution tests on deposit samples furnished or specified by Con Edison will be conducted, assuming deposit contains iron oxides only. Since copper is present in the Unit 2 sludge, additional tests will be required (a maximum of 45 additional tests).

b. Corrosion Rate Studies

Corrosion rate studies will be conducted with the following alloys

1. ASTM A336 steel
2. ASTM A533 steel
3. ASTM A508 steel
4. Inconel 600
5. 304 Stainless Steel

The corrosion rate will be determined by measuring the weight loss of an alloy specimen in contact with a given solvent for a fixed period of time. The solvent volume-to-alloy surface area ratio will be approximately 25 ml of solvent per square inch of alloy surface area. The solvent tested will be the solvent from the list in Section 1.2a that is judged to be superior, based on the dissolution tests to be conducted. Test temperatures will range from 200° to 300°F, and the duration of the corrosion tests will be 24 hours. Thirty such corrosion tests (15 in duplicate) with the selected solvent will be conducted.

c. Additional Types of Corrosion Tests

Additional types of corrosion tests will be conducted, such as crevice corrosion tests, provided these tests meet with the concurrence of Con Edison. Halliburton Services is aware that the central problem of the electric utility industry in nuclear steam generators is localized buildup of deposit in a confined space between tubes and carbon steel tube support plates. As a result of operational corrosion, iron oxides are found in the confined space. Since the oxides occupy more space than the base metal from which they are formed, the oxides expand against the tubes. This results in the phenomenon called "denting" of the tubes.

Halliburton Services will necessarily assume that any deposit removed from the steam generator is representative of the oxide deposit causing the denting problem. However, the deposit sample actually accessible for removal for laboratory study may be loose debris. From past experience, it is known that loose debris removed from scaled equipment is not always representative of tightly bound scale.

Task 2 - Cleaning Procedures

2.1 Cleaning Procedures Unit No. 1

Subcontractor will prepare a detailed procedure for implementing chemical cleaning of the secondary side of one or more of the steam generators at Indian Point Unit No. 1.

After evaluation of the tests conducted in Task 1 on the solvent, the dissolution studies, the corrosion studies, and the various possible cleaning procedures, recommendations will be made for the procedure that should be used in the development cleaning test of the Indian Point Unit No. 1 steam generator. The recommended procedure will be furnished in complete detail with operating

guides for use by Con Edison personnel during the development cleaning test.

Test procedures will be developed to demonstrate that the design objectives of equipment and systems to be used in the chemical cleaning will be met. These procedures will include:

- Storing and mixing chemicals.
- Introduction of chemicals into the steam generator secondary side.
- Feed and bleed capabilities.
- Process Parameter Control.
- Drainage and flushing, also rapid draining capabilities.
- Methods of ensuring secondary to primary leakage does not occur.
- Waste segregation capabilities.
- Waste modification capabilities - it may be necessary to prepare a sample of chemical waste in order to demonstrate that the waste solidification process will be acceptable.

The procedures used in current and prior industrial cleaning by Halliburton Services will be evaluated to determine the best procedure for use in cleaning the steam generators at Indian Point Units 1 and 2. A typical general procedure used for cleaning boilers would include the following:

a. <u>Preoperational Testing</u>

1. Fill the unit with cool demineralized water containing 1 gallon of surface-active agent per 1000 gallons of water.
2. Circulate the water mixture at a moderate rate through the system and slowly heat to the expected cleaning temperature.
3. While circulating at the cleaning temperature, check the entire system for leaks and make the necessary repairs. All valves, gauges, etc., should be carefully checked.

4. Cool and drain fluid to waste storage tank. Check all connections and fittings in this part of the system and repair any leakage found.

b. Cleaning Operation

1. Fill the unit with the selected solvent.

2. Circulate the solvent at a moderate flow rate and heat to the desired cleaning temperature.

3. Continue to circulate until analyses of solvent indicate reaction is complete.

4. Cool and drain solvent to waste storage tank.

Variations of this general procedure will be evaluated in the project These methods may include the following modifications in order to improve contact between the solvent and scale:

1. Repeated fills and drains with hot solvent circulation.

2. Inert-gas agitation of solvent through jet nozzles placed in appropriate places within the steam generator.

3. Agitation of solvent containing dissolved gases under pressure by periodic pressure decreases to release gas bubbles, thus aiding in stirring the solvent in crevices to promote contact of fresh solvent with deposit.

4. Intermittent soaking and drying of deposit by using vacuum technique.

Laboratory data indicates that the deposit to be removed from the steam generators is primarily magnetite (Fe_3O_4). Magnetite is a deposit that occurs frequently in industrial facilities, and, historically, the dissolution of this corrosion product is normally not considered difficult. However, two factors pertaining to this solubilization of magnetite must be considered.

The first consideration is the contact of the solvent with the deposit. The deposit, approximately 0.030 inch thick, is wedged between the outside of the steam generator tubes and the adjacent support plate. Therefore, the material to be removed (i.e., the deposit) is situated in a crevice with virtually no inlet nor outlet for the circulation or flow of solvent. Thus, to maintain fresh solvent in contact with the deposit appears to be the major difficulty in this particular cleaning job. It is also important to note that the ratio of quantity of deposit to solvent in the crevice will be quite large. This large quantity of deposit in the crevice in relation to the quantity of solvent that can penetrate the pore spaces in the deposit in the crevice will undoubtedly cause localized spending of the solvent in the crevices. Therefore, it is imperative that the cleaning procedure incorporate some method of agitation to replenish the solvent in the crevices.

The second factor that must be considered concerning the magnetite to be removed from the crevices is the physical nature of the deposit itself. If the magnetite has washed into the crevice or grown in place relatively rapidly, the deposit will probably be quite porous and, to some extend, will allow significant penetration of the solvent. On the other hand, if the deposit has grown in place slowly over a period of several years, the crystalline structure of the magnetite will probably be so near perfect that there will be virtually no voids or fissures to accommodate solvent attack.

c. Analytical Procedures

The Subcontractor will prepare analytical procedures for the on-site determination of iron and copper ions in spent or partially spent solution. Procedures for complete post-job analyses by atomic absorption spectroscopy will be conducted at Halliburton Services Research Center in Duncan, Oklahoma.

The presence of corrosion inhibitor will be verified by surface tension or some other qualitative procedure.

On-site monitoring of radioactivity in the solvent will be done by Con Edison.

d. Operating Instructions for Process Equipment

The Subcontractor will develop procedures for the operation of systems and equipment monitoring devices, control devices, safety devices or other items installed to perform the secondary side cleaning or waste processing, storage or solidification. These procedures will specify the operating sequence, operating parameters, functions, and each system and/or piece of equipment and action to be taken when deviations from established parameters occur.

Should waste have to be segregated to facilitate waste processing, the waste segregation scheme will be specified and procedures prepared to ensure that the waste will be properly segregated.

Processing requirements to ensure that waste is properly processed and/or solidified will be identified. Procedures will be developed to ensure that processing requirements are met.

e. Chemical Waste Storage Procedures

The Subcontractor will prepare procedures for the storage of chemical cleaning waste. It is conceivable that the most advantageous method of processing the chemical cleaning waste will necessitate segregation of the wastes. The spent chemical waste and first flush may be segregated from other rinse and flush waste. Storage requirements such as waste volumes and cooling of waste will be specified. Procedures will be provided to ensure that design criteria are met.

f. Chemical Waste Processing Procedures

The Subcontractor shall prepare procedures for the processing of chemical cleaning wastes. It is anticipated that two separate waste processing streams will be required. It may be possible to clean rinse and flush waste using filtration and demineralization. After processing, the waste may be acceptable for recycle back to the plant. The spent chemical waste and first flush may be processed to reduce its volume (by a method such as evaporation). This waste will then be solifified for disposal.

2.2 Prior to the Indian Point 1 development test cleaning, the Subcontractor shall fabricate corrosion test racks and specimens subject to Con Edison approval for installation in the Unit No. 1 steam generator during chemical cleaning.

The dimensions of the test rack will depend on the configuration of the opening into the steam generator and possibly other factors. The test rack will be designed to hold duplicate corrosion specimens (approximately 1 x 2 x 1/16 inch) of the five alloys of interest mentioned previously in this subcontract scope of work.

2.3 Cleaning Procedure, Unit No. 2

The Subcontractor will prepare a detailed procedure for implementing chemical cleaning of the secondary side of the steam generators at Indian Point Unit No. 2. The procedure shall include modifications and changes considered advisable on the basis of the Unit No. 1 cleaning operation. The procedure shall include all details as enumerated above under paragraph 2.1.

Task 3 - Process Design

3.1 The Subcontractor will develop and forward to Con Edison for approval: process flow diagrams, general arrangement sketches, detailed procedures for chemical cleaning and waste storage.

Prior to the development of flow diagrams, general arrangements, sketches, etc., design objectives and criteria will be established for equipment and systems required to perform a steam generator secondary side chemical cleaning. These documents will be used in the sizing of equipment and the preparation of specifications.

Equipment and systems will be required to allow the following:

- Preheating and introduction of chemicals into the secondary side.
- Bringing the chemical solution to the proper temperature and pressure once in the secondary side.
- Maintaining the proper temperature, pressure, and flow.
- Monitoring the chemical cleaning process.

- Auxiliary agitation with nitrogen.
- Treatment and venting of offgases.
- Providing the capability to make up and let down during the cleaning process.

Since part of the steam generator forms the boundary for the primary side, consideration will have to be given to preventing secondary to primary leakage of chemicals should a leak develop during the cleaning process. In addition, the necessity for the capability to rapidly drain the secondary side will be evaluated.

Similarly, design objectives and criteria will be developed for systems that will collect, process, and solidify the cleaning waste. Consideration will be given to waste segregation and cleanup of rinse and flush water for recycle. Assuming that the secondary side is contaminated, volume reduction and solidification processes compatible with the cleaning solution will be evaluated.

After the system design requirements have been established, process flow diagrams and general arrangement sketches will be prepared. It is expected that site visits will be necessary in order to properly evaluate available space for equipment installation and routing. In addition, input from plant personnel on unique requirements would be obtained during the site visits.

Detailed procedures will be prepared for chemical cleaning of the steam generators and collection of waste.

3.2 Con Edison shall provide plans, specifications, drawings, and equipment manuals needed to develop and install proposed temporary modifications and systems.

Task 4 - <u>Solvent Specifications</u>

4.1 The Subcontractor will prepare specifications for the solvents (including additives) for Con Edison's use in <u>competitively</u> purchasing solvents selected for use. Solvents and additive shall be identified in actual chemical terms as opposed to commercial names.

Notwithstanding any other provisions of this Subcontract, the Subcontractor need not furnish proprietary data developed at private expense and Con Edison shall acquire no rights in respect to any proprietary data so withheld, other than rights specifically acquired in any other paragraph(s) of this Subcontract.

If the optimum chemical cleaning reagent is proven to be an existing proprietary reagent significantly superior to any identified combination of generic chemical compounds, and is readily available at reasonable cost, an exception will be considered to the Subcontractor's obligation to fully describe the reagent composition. However, certain key personnel at Con Edison and the Nuclear Regulatory Commission must know the composition for licensing purposes.

Task 5 - Steam Generator Secondary Side Cleaning

5.1 The Subcontractor will provide technical direction in the following area, for the implementation of the chemical cleaning:

a. Training Consolidated Edison's site personnel and other parties who will be involved in the actual chemical cleaning and waste handling.

b. Preparation of all chemicals for the chemical cleaning and waste solidification.

c. Filling the steam generator(s) with the cleaning solution.

d. Controlling process conditions as specified in the procedures for chemical cleaning.

e. Draining the solvent from the steam generator cleaning system to the waste storage area.

f. Flushing and rinsing the steam generator as required until all solvent is reduced to an acceptable level, as specified in the procedures for chemical cleaning. Rinses will be drained to the waste storage area.

The equipment to be furnished by Halliburton Services for the development cleaning operation includes:

a. One industrial pumper (moderate volume). This is a mobile unit containing two 4 x 3 centrifugal pumps, each driven by a separate 3-71 diesel engine, and two 1000-gallon tanks.

b. One transport, 4000-gallon capacity.

c. One mobile tank, 21,000-gallon capacity.

This equipment is proven equipment that is currently being used by Halliburton Services in their industrial cleaning operations.

5.2 Con Edison will provide the following:

a. Required piping additions.

b. All craft labor during on-site cleaning activities.

c. All on-site maintenance activity required during the chemical cleaning and waste handling operations.

d. Demineralized water and required utilities.

e. Health Physics procedures.

f. Removal of wastes.

g. Solvents for the chemical cleanings.

h. Sufficient office space and standard office equipment for Subcontractors project personnel during the on-site portions of the project. Site laboratory and laboratory personnel will be available for performing required radiochemical analyses during the development test cleaning and full demostration test cleaning periods. The Subcontractor will be responsible for the chemical analyses.

Task 6 - Documentation

6.1 Test descriptions and results will be thoroughly documented and available for industry wide distribution. The Subcontractor shall also deliver, as a minimum, the following:

a. A monthly letter-type report will be submitted on or about the fifteenth of each month, effective the calendar month after the notice to proceed is given. This report will summarize the work accomplished the preceding month, giving the time spent by the key personnel and the expenditures for the month. Technical achievements during the month will be emphasized, and projected plans presented for the next month.

b. A report will be produced covering Tasks 1 and 2 of Phase I on the completion of work for these tasks. Since these tasks will be performed concurrently, one report will cover the work for both tasks.

c. The report for Task 3 will be written before the above report, if possible. This report will include recommendations for the modification of the Con Edison facilities in order to accomplish the Indian Point Unit No. 1 development test cleaning and the subsequent Indian Point Unit No. 2 full demonstration cleaning.

d. A report will be submitted for Task 4 recommending the solvents and giving their specifications for Con Edison to use in purchasing the solvents.

e. A report will be written approximately 6 months after the notice to proceed or at a logical point in the project, to document the technical progress to that point. Detailed information will be included on the results of all work.

f. Following the development test cleaning of Indian Point Unit No. 1 steam generator in Task 5, a report will be written for the work accomplished and the conclusions drawn from the results. This could possibly be a part of the semiannual report.

g. Following the completion of Task 1 of Phase II, a report will be written to update the evaluations made during the work on Phase I. Procedures, solvent specifications,

and process design for the demonstration cleaning of Indian Point Unit No. 2 steam generators will be included in the report.

6.2 All reports shall be submitted in triplicate.

PHASE II

At the option of Con Edison, the Subcontractor will perform the following tasks:

Task 1 - Planning for Demonstration Cleaning of Indian Point Unit No. 2

1.1 Update Phase I evaluations, procedures, solvent specification and process design for IP #2 demo, based on results of IP #1 development test(s), and data available at that time from EPRI funded lab studies.

Task 2- Demonstration Cleaning of Indian Point Unit No. 2 Steam Generators

2.1 Provide technical direction for the actual demonstration cleaning of four Indian Point Unit No. 2 Steam Generators.

This task work will be the same as that described in Phase I, Task 5. However, procedures and system configurations may be modified to reflect the experience gained during the development test cleaning of Indian Point Unit No. 1 described above.

The equipment planned for use in cleaning Indian Point Unit No. 2 steam generators would be the same as used in cleaning Unit No. 1, with the addition of the following units:

a. Special high volume centrifugal pumper. This mobile unit includes two 10 x 8 centrifugal pumps powered by V-12 diesel engines, as well as two 1000-gallon tanks.

b. Mobile tanks, 21,000-gallon capacity. These tanks will supplement the one tank used in cleaning Indian Point Unit No. 1. Additional tanks are needed because of the larger volume of solvent required for Indian Point Unit No. 2.

The solvent will be furnished by Con Edison.

Task 3 - Final Project Report

3.1 Report results.

Reports shall be prepared and submitted the same as that described in Phase I Task 6.

MANPOWER AND SCHEDULE

Halliburton Services has reviewed the Con Edison Preliminary Bar chart Reprot, entitled "Indian Point Unit 2 Steam Generator Program," dated June 27, 1977 and is essentially in agreement with this schedule. The key dates for the work required by Halliburton Services are as follows:

Start Work	August 8,1977
Start Solvent Testing	August 8, 1977
Chemically Clean Unit 1	October 17, 1977
Complete Unit 1	November 18, 1977
Chemically Clean Unit 2	April 1978
Complete Work	July 1978

Note: A principal objective of this development and demonstration project is that sufficient information will be disseminated so that techniques and procedures which are developed may be applied by others. It is intended that at the completion of the demonstration, Subcontractors on this project will provide or will have already provided to Con Edison for distribution all pertinent reports, drawings, equipment lists and specifications, chemical process descriptions, reagent compositions, and corrosion data. This information shall be in sufficient detail to assure widespread commercial understanding and acceptance of the results by industry and regulatory bodies.

PWR STEAM GENERATOR CHEMICAL CLEANING
PHASE I FINAL REPORT
SOLVENT AND PROCESS DEVELOPMENT

APPENDIX B - UNITED NUCLEAR INDUSTRIES SCOPE OF WORK

UNITED NUCLEAR INDUSTRIES SCOPE OF WORK

STEAM GENERATOR SECONDARY SIDE CHEMICAL CLEANING

OBJECTIVE

Recently several PWR's have experienced steam generator tube leakage at support plates because of a condition called "tube denting", which results from the corrosive expansion of tube support plates.

The objective of this subcontract is to develop method(s) to chemically clean the secondary side of the steam generators of Indian Point 1 and Indian Point 2 PWR plants as part of an ERDA sponsored demonstration program to improve PWR plant maintenance and availability. Phase I contains tasks, related to both Indian Point 1 & 2. Phase II covers the demonstration cleaning of the four Indian Point Unit 2 Steam Generators. Two Subcontractors have been selected for parallel development through the cleaning of one steam generator at Indian Point Unit No. 1. If development efforts are successful, demonstration at Indian Point No. 2 would be carried out by either United Nuclear Industries or the other Subcontractor at the option of Con Edison.

The development testing will be designed to:

- Verify the laboratory results under field conditions.
- Provide Consolidated Edison confidence that the cleaning of the Indian Point 2 steam generators can be accomplished without damage to the equipment.
- Provide the data necessary to obtain NRC approval for application of the technique to Indian Point Unit No. 2.
- Provide experience to Consolidated Edison operating personnel.

The techniques, procedures and data obtained from the development testing will be used to prepare and implement a program to chemically clean the secondary side of the Indian Point Unit No. 2 steam generators.

The demonstration cleaning of IP2 (Phase II) will be by one of the two Phase I subcontractors, at the option of Con Edison. This includes updating of Phase I results for Phase II demonstration.

The schedule for the entire program is consistent with Consolidated Edison's requirements. The Indian Point Unit No. 1 development cleaning is scheduled for completion in October 1977. All plans, procedures and approvals needed for the chemical cleaning of the four steam generators for Indian Point Unit No. 2 should be in place by April 1, 1978, with the cleaning to be completed and the system restored by April 28, 1978.

PHASE I

United Nuclear Industries (hereinafter also referred to as "UNI" or "Subcontractor") shall perform the following tasks during Phase I to accomplish the program objectives of:

- Verifying whether or not chemical cleaning is a viable and effective method of removing corrosion products from crevice areas between steam generator tubes and tube sheets.
- Selecting the most effective solvent for conducting the chemical cleaning.
- Demonstrating under a nuclear environment in an Indian Point Unit No. 1 steam generator that chemical cleaning is safe and efficient.

The specific tasks included in Phase I are:

1. Provide technical services to evaluate chemical cleaning solvents and procedures to be used in cleaning the secondary side of the steam generators at Indian Point 1 and Indian Point 2.
2. Recommend procedures for chemical cleaning.
3. Provide consulting services in the process design of facility modifications needed to accomplish both the IP #1 development test cleaning and the IP #2 full demonstration cleaning.

4. Provide specifications for Con Edison's use in competitively purchasing solvent (including additives) selected during Task 1 solvent evaluation.

5. Provide technical direction for the actual development test cleaning of a steam generator in Indian Point Unit No. 1.

6. Report results.

PHASE II consists of the following tasks and will be performed, at the option of Con Edison, under this subcontract or under the parallel subcontract.

TASKS

1. Update Phase I evaluations, procedures, solvent specifications and process design for IP #2 demo, based on results of IP #1 development test(s), and data available at that time from EPRI funded lab studies.

2. Provide technical direction for the actual demonstration cleaning of four Indian Point Unit No. 2 Steam Generators.

3. Report results.

WORK DESCRIPTION - The following further defines the tasks:

PHASE I

Task 1 - Evaluate Chemical Cleaning Solvents and Procedures

a. Solvent Evaluation

The objective of this task is to select the most effective solvent of several candidates to remove tightly adherent, compact corrosion products from crevice areas between tube support plates and steam generator tubes. Several PWRs have experienced tube leakage at support plates because of a condition called "tube denting". These leaks have resulted from the growth of corrosion products in the crevice area at the tube support plate, resulting in mechanical deformation of the penetrating tubes.

The deposit, mainly magnetite form of iron oxide, occupies more volume than the original metal and its expansion results in the mechanical deformation of the tubing in the steam generators.

Solvents to be evaluated are:

(1) 10% EDTA (ethylenediamine tetraacetic acid)

1% hydrazine

Inhibitor

Ammonium hydroxide to pH 7

(2) 4½% EDTA

Inhibitor

Ammonium hydroxide to pH 7

(3) Citrosolv method

The inhibitors to be used would be Rodine 31 (Amchem Corp.), trihexylamine, or similar compounds.

Up to three additional solvents would be fully evaluated in the complete scale dissolution and corrosion tests described below. These three additional solvents would be selected from a group of about ten candidate solutions; three candidates will be screened for their effectiveness in removing magnetite from samples already available in United Nuclear Industries laboratories. Although there is little copper in the crevice areas, there is a significant amount of copper in the steam generator sludge and this shall be considered in solvent evaluations.

Candidate solutions will include proprietary solvents if available, among them DOW NS-4. Also to be included is a citric acid-oxalic acid formulation which has been successfully employed on numerous occasions by United Nuclear Industries to remove magnetite films from primary coolant components in N Reactor and from components furnished by electrical utilities that were removed from other commercial nuclear electrical generating plants.

Final testing of the solvents would be subject to concurrence by Consolidated Edison Company. In addition to the solvents that will be selected for testing through UNI's extensive experience, a literature search will be conducted to make sure that no potential candidate solvent is overlooked; should the literature search reveal additional solvents, they will be included in the solvent evaluation program with Consolidated Edison's concurrence.

Two types of final solvent evaluation testing will be conducted in United Nuclear Industries laboratories:

> Dissolution studies on scale samples to be supplied or specified by Consolidated Edison will be conducted. These will be crevice samples in which the magnetite has been formed in situ under simulated steam generator conditions. The crevice samples, simulating the tube support plate-tube-geometry, will have been originally packed with magnetite and exposed in an autoclave containing secondary system water with about one hundred ppm sodium chloride. It is expected that magnetite very similar to that found in operating steam generators will be formed. These samples, limited in number, will be utilized in the final phases of the dissolution tests. They will be immersed in the candidate solvents at the temperatures and concentrations selected for the Indian Point Unit No. 1 steam generator development cleaning. These solvents and application conditions will be selected from the following tests.
>
> Dissolution scanning tests on scale samples to be supplied by United Nuclear Industries will be conducted. These samples will consist of an artificial crevice packed with magnetite and of artificial crevices on piping already containing magnetite formed by clamping a mating section of piping over the magnetite-covered surface. These samples will be used to scan the candidate solvents for effectiveness as a function of temperature, concentration and time.

Because of the potential difficulty in removing the magnetite from the crevices, United Nuclear Industries will conduct a parallel testing program to identify and demonstrate aids in cleaning the crevices. These tests would include investigation of processes such as the use of ultrasonics, raising and lowering of the boiling interface to above and below the crevices, thermal shock, and conversion of the magnetite to other forms such as hematite.

These tests would be conducted parallel with the tests requested in the RFP and would not interfere with the other tests or enter the critical path.

Laboratory Corrosion Studies

Laboratory corrosion studies will be conducted by immersing corrosion samples into stirred solutions of the candidate solvents at the temperatures and concentrations selected for dissolution of the tube support plate corrosion products. These tests will be directed by specialists on the UNI staff that are accredited by the National Association of Corrosion Engineers. For those solvents listed in the preceding section that contain EDTA as the primary ingredient, the tests will be conducted in pressurized autoclaves since the application temperatures are above the atmospheric pressure boiling point.

The corrosion studies will be conducted on both unstressed and stressed samples. The unstressed samples will be fabricated into either washers or strips and exposed on electrically insulated holders to prevent galvanic corrosion. The stress coupons will be both paired samples with a variable width crevice between the samples stressed by the deflection of a beam process and U-bend samples. Some of the samples will contain weld beads to verify the lack of corrosion attack at welded areas by the solvents.

Materials for the testing will be those materials present as steam generator tubing (sensitized and unsensitized Type 304 SS for Indian Point Unit No. 1, Inconel 600 for Indian Point Unit No. 2) and the steels present in the secondary side of the steam generators (ASTM A336, A533, A508, A285, A105 and A516). Materials not available from the steam generator manufacturer will require purchase before the testing can commence. Testing will include dissimilar metal junctions.

Examination of the samples for corrosion attack will be by visual examination, microscopy, weight loss measurements, and selected metallography. Corrosion losses will be calculated from the weight loss data.

b. Task 2, Cleaning Procedures

The objective of this task is to provide detailed, written approved procedures prior to the conduct of the Indian Point No. 1 steam generator development test cleaning.

Task 2, Cleaning Procedures - Cont'd

In addition, this task provides for coupon rack design, fabrication and installation for the test cleaning and provides detailed procedures for implementing chemical cleaning of the secondary side of the steam generators at Indian Point Unit No. 2. United Nuclear Industries will provide the following procedures:

- Preoperational checkout
- Chemical cleaning
- Analytical
- Auxiliary equipment
- Waste storage
- Waste processing

Preoperational and Detailed Chemical Cleaning Procedures

Prior to the start of the chemical cleaning procedure, a preliminary preoperational procedure step must be completed. This step will accomplish the following:

- Confirm liquid inventory required to fill the cleaning loop
- Simulate complete chemical cleaning cycle using water only
- Verify operation of equipment
- Test for steam generator leakage
- Verify liquid temperature control methods
- Assure that the system is leak free

The detailed procedures needed for chemical cleaning will include:

(1) Purposes and objectives(s).

(2) Responsibilities and work to be performed.

(3) Process flow sheets.

(4) Piping and instrumentation drawings.

(5) Temporary or auxiliary equipment and piping requirement and operating procedures, including corrosion coupon test racks and specimens.

(6) Instrumentation details, including corrosometer.

(7) Valve settings.

(8) Activity schedule and sequence for process.

(9) Prerequisites - Those things that must be accomplished prior to initiation of the procedure application, including detailed procedural steps for each item, the equipment preparation required, and communications systems needed.

(10) Final preparation checklist - A check that all prerequisites are properly concluded and that the people and systems are ready to proceed.

(11) Actuation of the chemical cleaning procedure - Including assurance that emergency actions will be initiated, if needed.

(12) Post-cleaning flushing - Procedures and checksheets.

(13) Approval signatures.

Analytical Procedures

The analytical chemistry procedures for monitoring and evaluating the chemical cleaning will include methods for verification of:

(1) Acid or chelant concentration.

(2) Inhibitor concentration or effectiveness.

(3) Copper and iron concentration.

Instrumentation will include corrosometer, pH and conductivity meters.

Waste Storage and Waste Processing Procedures

The detailed procedures needed for waste management would include:

(1) Waste management purposes and objectives.

(2) Responsibilities and work to be performed.

(3) Drawings and flow sheets.

(4) Activity schedule and sequence of process.

(5) Prerequisites - Things to be done prior to initiation of procedure use, including detailed procedural steps for each item, the equipment preparation required and the communications needed.

(6) Final preparation checklist.

(7) Emergency actions to be taken if things go wrong.

(8) Rinse solution considerations.

(9) Waste accumulation.

(10) Waste processing.

(11) Waste disposal.

The procedures for conducting the Indian Point No. 1 steam generator chemical cleaning under the plan proposed will be divided into two major subsections: a Master Procedure subsection and a Sequencing subsection. The Master Procedures break each operation down into basic elements while the Sequencing Procedures provide the detailed sequences for linking the basic elements into a viable decontamination procedure. This method of procedure preparation results in a more compact and easily performed set of procedures. At the time of conducting each step of the cleaning operation, applicable portions of the Master Procedure are reproduced, assembled

in the appropriate sequences, and distributed to each employee participating in the task. The Sequencing Procedures also detail the prerequisites and precautions required to properly conduct the chemical cleaning, and/or waste processing.

A flow diagram will be used in conjunction with the procedures to assure all participants in the operation are fully aware of the meaning of each operating step.

The procedure for processing the wastes generated during the chemical cleaning of the steam generators will utilize existing plant procedures to the maximum extent possible in order to take advantage of plant personnel familiarity with in-plant procedures and equipment and to minimize errors in execution.

A flow diagram will also be used in conjunction with these procedures.

Chemical Cleaning Plan Documentation for Indian Point No. 2

As a parallel effort, the same kind of in-depth planning design and procedure preparation will be initiated for Indian Point No. 2 as shown for Indian Point No. 1. These preliminary procedures will be updated later in Phase II by incorporating any modifications or improvements recommended as a result of the Indian Point No. 1 cleaning evaluation.

Evaluation

The final element of this task is to evaluate the effectiveness of the cleaning operating and waste disposal tests conducted on Indian Point Unit No. 1. Recommendations for changes needed for application on the Indian Point No. 2 steam generators will be made. Data will be evaluated and a written report prepared, incorporating UNI's analysis and recommendations.

c. Task 3, Process Design

The objectives of this task are to provide a detailed and comprehensive design for equipment to conduct the chemical cleaning, purchase or rent the required equipment, install the equipment in preparation for the cleaning, and make final modifications of the cleaning procedures. The work elements of this task from the critical path for achieving a state of readiness for initiation of system cleaning in October, 1977 as scheduled by Consolidated Edison.

The critical path work elements are:

- Receipt of plant blueprints, operating manuals, equipment descriptions, and SAR from Consolidated Edison.
- Review of the plant descriptive materials by a team of UNI engineers of various disciplines.
- Formation of various alternative plans and methods with the selection of a preferred conceptual design.
- Preparation of process flow diagrams based on the conceptual design.
- Detailed design.
- Preparation of procurement specifications and procurement and/or rental of the equipment.
- Construction, installation, and checkout of the cleaning system.

The plant reviews, the conceptual design, and process flow diagram phases will be conducted by UNI engineers.

The work to be accomplished will be development of an in-depth plan optimized to minimize the costs, taking into account:

(1) Cleaning effectiveness.

(2) Risk of plant damage.

(3) Minimizing waste volumes.

(4) Waste disposal costs and regulatory restrictions.

(5) Plant facilities that can be used for the chemical and waste disposal.

(6) Plant modifications required to conduct the cleaning.

(7) Special equipment, such as temporary piping, instrumentation, and solution storage.

(8) Special requirements imposed, such as minimum acceptable dose rates, airborne contamination, and smearable contamination.

(9) Specific problems such as the consequences of spills.

(10) Personnel exposure that will be used during the cleaning work.

Because of the extremely tight schedule, it will be necessary to fix the conceptual designs to the worst case, i.e., for application of the EDTA-base solvents specified in the RFP. These solvents require application at elevated temperatures and pressures and will require special equipment designs that essentially eliminate the use of conventional chemical cleaning equipment that might be rented. However, if the more conventional organic solvents that will be evaluated are selected for the final in-plant demonstration, these solvents can be handled in the designed equipment but at lower temperatures and pressures than for those for which the system is designed.

The detailed final design, preparation of procurement specifications, and equipment procurement will be conducted by Consolidated Edison in order to minimize costs and make cost effective use of their manpower pool. Two UNI engineers will be in residence at the Consolidated Edison facilities to provide technical direction and work continuity from the previous work segments. These engineers will be the key engineers involved in the previous review, conceptual design and process flow diagram preparation portions of this task.

Simultaneous with the detailed design portions of the task, final cost estimates to conduct the Indian Point Unit No. 1 cleaning demonstration and preliminary cost estimates to conduct the Indian Point Unit No. 2 cleaning will be prepared.

d. <u>Task 4, Solvent Specifications</u>

The objective of this task is to prepare the purchase specifications for Con Edison's use in the purchase of the solvent selected for the demonstration. This task will be conducted by experienced chemical and quality control engineers. Con Edison's procurement should be completed several weeks before the chemical cleaning is scheduled so that this task will not enter the critical path.

e. Task 5, Steam Generator Secondary Side Cleaning

The objective of this task is to provide technical direction to Consolidated Edison's site personnel and other parties who will be involved in the actual chemical cleaning and waste handling. The following specific items are included in this task:

(1) Provide technical direction to local construction contractor(s) and/or Con Edison maintenance forces to fabricate and install the special temporary equipment utilized for the chemical cleaning. This direction is to be provided by the UNI mechanical design, electrical design, and project engineers involved in preceeding tasks.

(2) Train Consolidated Edison's site personnel and other parties who will be involved in the actual chemical cleaning and waste handling. This work will be conducted by a UNI engineer who will have been completely involved in the project by previously working on the Task 2 cleaning procedures and the Task 3 review and design.

(3) Provide technical direction of Consolidated Edison personnel in chemical preparation operations. This work will be conducted by personnel that have performed this type of work during UNI's numerous past reactor decontaminations.

(4) Provide technical direction to Consolidated Edison personnel in conducting the chemical cleaning. This will be performed by a team of specialists and will include initial preparatory operations, filling the steam generator with the chemical solvent, controlling process, conditions as specified in the cleaning procedures, draining the solvents to the storage areas, and flushing and rinsing of the steam generator as required until all solvent is reduced to an acceptable level.

(5) Provide technical direction to Consolidated Edison personnel in waste disposal. Even though the Indian Point steam generator Unit No. 2 cleaning wastes are not expected to be radioactive, this cleaning is to be a demonstration for later cleaning of other utility's steam

generators where radioactive contamination can be expected; therefore, this subtask will also include demonstration of solidification of the wastes. This can be accomplished by using temporary equipment or, at less cost, by using existing in-plant equipment.

(6) Provide technical direction for dismantling the temporary equipment and for cleanup operations. This work will be provided by the project engineer responsible for directing the installation. As much equipment as practicable will be saved for the subsequent Indian Point Unit No. 2 steam generator chemical cleaning.

(7) Remove corrosion and crevice samples, conduct corrosion measurements and metallography, and evaluate the results.

During Task 5, it is expected that Consolidated Edison will provide the following:

a. Required piping additions, including temporary machinery equipment, tooling and instrumentation as required.

b. All craft labor during on-site installation and cleaning activities.

c. All on-site maintenance activity required during the chemical cleaning and waste handling operations.

d. Demineralized water and required utilities.

e. Health physics procedures.

f. Removal of wastes.

g. Solvents for the chemical cleanings.

f. <u>Task 6, Documentation</u>

Test descriptions, test results, equipment descriptions, and procedures will be thoroughly documented and available for industry-wide distribution. These documents will be prepared by the cognizant technical personnel and project manager and will be reviewed and edited by a professional technical editor. UNI will provide the following reports:

(1) Monthly program letters containing information on budget matters and schedule adjustments. The letters will summarize highlights of new technical work performed the past month and will inform Consolidated Edison of all major technical achievements.

(2) Semiannual program reports containing technical descriptions and interpretations of all new work performed and results obtained. The reports shall present full descriptions of all procedures, experimental conditions and test results of the work programs outlined above.

(3) A final task report, for each task, presenting full descriptions of all test apparatus and equipment, experimental and analytical conditions and procedures, test or demonstration results, data interpretation, and technical equipment development and substantiating analyses.

(4) A final program report for all major task categories listed above summarizing test objectives, apparatus and experimental procedures, test results, interpretations of results, substantiating analyses, and technical developments.

All reports will be submitted in triplicate.

PHASE II

At the option of Con Edison, the Subcontractor will perform the following tasks:

Task 1 - Planning for Demonstration Cleaning of Indian Point Unit No. 2

a. Task 1, Update of Phase I Procedures

The objective of this task is to update the Indian Point Unit No. 2 conceptual design, process flow diagrams, procedures and solvent specifications prepared during Phase I. The update will be based on the Phase I laboratory data, technical evaluations obtained from the Indian Point Unit No. 2 steam generator development test and other concurrent studies such as those conducted by EPRI. The final design and detailed procedures shall include all details as enumerated in Phase I, Tasks 2 and 3. In addition, if the crevices prove to be extremely difficult to clean during the Phase I demonstration, even in the best of solvents, the cleaning procedures will include application of special crevice cleaning aids and equipment (evaluated in Phase I, Task 1).

The Phase II demonstration will be conducted in all four Indian Point Unit No. 2 steam generators; therefore, special effort will be made in the procedures to transfer and reuse the solvents in order to minimize time and waste volumes. Consideration will be given to the installation of duplicate equipment to permit simultaneous cleaning and minimize reactor downtime.

The procedures will include the following items:

(1) Preoperational installation and checkout.
(2) Analytical chemistry.
(3) Auxiliary equipment.
(4) Chemical cleaning.
(5) Waste storage and processing.

Because of the different geometries between the Indian Point Unit No. 1 and No. 2 steam generators, new coupon racks will be designed and fabricated. These will be installed in the steam generator, the steam drum, and the recirculation piping.

b. Task 2, Steam Generator Secondary Side Cleaning

This task is similar in scope to that described in Phase I, Task 5, but will be slightly increased in magnitude because of the increase in the number of steam generators to be cleaned. Technical direction will be furnished by UNI as in Phase I in the following areas:

(1) Fabrication and installation of special temporary equipment.

(2) Training of Consolidated Edison's site personnel for the cleaning demonstration.

(3) Chemical preparation of the solvents for the cleaning.

(4) Filling, controlling and draining operations during the cleaning.

(5) Flushing and rinsing operations during the cleaning.

(6) Waste disposal operations following the cleaning.

(7) Cleanup and dismantling at the completion of the demonstration.

c. Task 3, Documentation

The high quality level of documentation of test progress and final results as described in Phase I, Task 6, will be continued for Phase II.

In addition to the above tasks, UNI will provide test results, procedures and personnel to assist Consolidated Edison in meetings, discussions and written correspondence to keep the NRC informed on job progress and, if found appropriate, to obtain NRC concurrences, and/or licenses.

Note: A principal objective of this development and demonstration project is that sufficient information will be disseminated so that techniques and procedures which are developed may be applied by others. It is intended that at the completion of the demonstration, Subcontractors on this project will provide or will have already provided to Con Edison for distribution all pertinent reports, drawings, equipment lists and specifications, chemical process descriptions, reagent compositions, and corrosion data. This information shall be in sufficient detail to assure widespread commercial understanding and acceptance of the results by industry and regulatory bodies.