WNET-102

For Unrestricted Distribution

Date 5-12-72 WNES

Regulatory File Cy.

Received w/Ltr Dated 6-7-72

Westinghouse

A Technical Report On Steam Generator Tubesheet Cladding

Indian Point Unit No. 2
Docket No. 50-247

CONSOLIDATED EDISON
INDIAN POINT PLANT NO. 2
NONRADIOACTIVE FIELD REPAIR PROCEDURE
FOR EXPLOSIVE CLAD SEPARATION ON "44"
TYPE STEAM GENERATOR TUBE PLATE

Rev. 4 4/3/72

S. W. Wismer

This document contains information proprietary to Westinghouse Electric Corporation; it is submitted in confidence and is to be used solely for the purpose for which it is furnished and returned upon request. This document and such information is not to be reproduced, transmitted, disclosed or used otherwise in whole or in part without the written authorization of Westinghouse Electric Corporation.

This volume is Part 2, consisting of Section 12 only. Sections 1-11, which are generic in nature, are contained in Part 1.

Westinghouse Electric Corporation
Tampa Division
Tampa, Florida

8111140193 720403
PDR ADOCK 05000247
P PDR

3111

Rev. 1, dated 7/6/71, was the original procedure for Con. Ed., Indian Point.

Rev. 2 changes:

Title Page - Rev. 2, 7/27/71
Added to 2.0 - NDT personnel qualified to Sect. III (SNT-TC-1A).
6.17 - 5x instead of PT.
7.0 a. Changed 250°F to 150°F.
NPT-12 Rev. 3 - To add 5/32" filler metal.

Rev. 3 dated 9/27/71

Changes made from Rev. 2 to Rev. 3 were editorial changes (not of a technical nature) made to have the procedure wording consistent with repair procedures for similar work done at other sites and to make minor corrections. Work was performed in accordance with practices and procedures in effect when work was done.

Rev. 3 changes:

Quality Control Audit in Table of Contents.

1.0 Cladding separation - Sketch 1.0 deleted - not applicable.

2.0 Report of Preheat (Form TA-00028) deleted - Preheat checked on Form TA-00007.
NDT personnel qualified to Section III (SNT-TC-1A)-added
Manufacturer's Report of Welded Repairs or Alterations-added
NDT-14 and NP-WQ-14 added.
84350LA and Report of Ultrasonic Inspection (Form SP-3534-A) added

3.8 n. Pressure test was hydrotest.

3.11 Reference to preheat record form deleted (See 2.0 above)
Ultrasonic testing form added.

4.0 NP-WQ-14 added.

5.0 c. Typical 800 amp. was 800 amp.

6.0 Reference to lead shielding deleted.

7.2 a. 16 TC's was 20 TC's.

8.0 8.2 5x partition plate prep added and paragraphs renumbered.

8.5 changed to specify "accessible" overlay weld.

8.6 "pressure" test was "hydrotest".

8.7 UT . . . added.

9.7 Quality Control Audit - deleted.

10.0 Quality Control Audit - Added.

Sketch A revised to show 16 TC.

NPT-12, Rev. 4 8/12/71 (12-24), Revised to add WQ 305.

NPT-14 added)
NPT-WQ-14 added) (12-31 to 12-38) - Tube repair used in modification
TQ 43-43M added)

Addendum 1 to 84350 JA, Rev. 2, 8/20/71 (12-49) Revised to specify bleed area "in excess of 3/16" rounded indication" shall be cause for rejection. In last sentence "saw tooth maximum" deleted.

Rev. 4, dated 4/3/72

Rev. 4 changes:

1) 6.2 (12-9) changed to read as follows:

6.2 Install plastic tube caps or silicone plugs (1st 5 rows) both sides of divider plate. Install fireproof tube sheet covering.

12.0 APPENDIX CONTENTS

Repair Procedure for Indian Point Unit 2 Steam Generators 12-3

Containing:

- Welding Process Specifications
- Procedure Qualifications
- Weldor Qualification Tests
- Nondestructive Test Specifications

Verification of National Board Numbers 12-53

Manufacturer's Report of Welded Repair or Alterations For:

Steam Generator	#21	Shop	Order	16A5780-3	(National	Board	#736)	12-54
"	"	#22	"	"	16A5780-2	("	"	#734)	12-56
"	"	#23	"	"	16A5780-4	("	"	#738)	12-58
"	"	#24	"	"	16A5780-1	("	"	#732)	12-60

FIELD MODIFICATION PROCEDURE FOR EXPLOSIVE CLADDING ON A "44" TYPE TUBE PLATE IN A NONRADIOACTIVE ENVIRONMENT

TABLE OF CONTENTS

1. Drawings

2. Process Specifications

3. Services Required

4. Weldor Qualification

5. Equipment and Tools

6. Repair Procedure

7. Post Weld Heat Treatment Procedure

8. Partition Plate Repair

9. Final Cleaning

10. Quality Control Audit

1.0 Westinghouse Drawings

Drawing Title	44 Series
Outline	679J440
General Assembly	679J441
Coolant Channel	679J442
Tube Plate	679J443

2.0 Process Specification

All welding and testing procedures to be in accordance with Section III, ASME Code titled "Nuclear Vessels."

Westinghouse Procedure Specifications for reference are as follows: NPT-11, NPT-12, NPT-14, 84350 JA, and 84350 LA.

Q.C. Record Forms

Inspection Point Program - (Form TA-00030A)

Weldor Log -(Form TA-00007)

Report of Liquid Penetrant and 5X inspection - (Form TA-00008)

Report of Post Weld Heat Treatment -(Form TA-00009)

Report of Ultrasonic Inspection -(Form SP-3534-A)

NP-WQ-11 - Weldor Qualification Test for Manual Inconel Overlay Welding

NP-WQ-12 - Weldor Qualification Test for Manual Inconel Welding Process

NP-WQ-14 - Weldor Qualification Test for Manual TIG Repair of Inconel Tubes

NPT-11 - Manual Inconel Overlay Welding Process

NPT-12 - Manual Inconel Welding Process

NPT-14 - Manual TIG Repair Welding of Inconel Tubes

84350 JA - Liquid Penetrant Inspection

84350 LA - Ultrasonic Inspection

Set of Audit Check Sheets - Used by Tampa Q.C. Inspector at Site

Weldor Performance Qualification Record, ASME Section III & IX

Welding Procedure Qualification - ASME Section III & IX

NDT Personnel qualified to Section III (SNT-TC-1A)

Manufacturers Report of Welded Repairs or Alterations

3.0 Services Required

In addition to normal services, such as electricity, compressed air, etc., the following outside services are recommended.

3.1 Qualified testing laboratory or Westinghouse Tampa personnel for processing, weldor test plates, and issuing certified qualification papers.

3.2 Nondestructive testing services for liquid penetrant are to be performed by (W) Tampa personnel.

3.3 Post weld heat treatment equipment is required. Experience to date is to use a resistance type system from Cooperheat, 961 E. Hazelwood Ave., Rahway, N. J. 07065. This service need not be limited to Cooperheat alone but any system that meets the specification and the site electrical power availability, may be used.

3.4 Services of the ASME Code Inspector.

3.5 It is the responsibility of Westinghouse Tampa Div. to keep the ASME inspector informed of the progress of the work and he shall be notified 24 hours in advance when the vessel will be ready for the required tests or inspections.

3.6 The name and address of the area ASME inspector will be furnished by the Tampa Division.

3.7 A preliminary meeting should be arranged with this inspector and Westinghouse field personnel well in advance of any assembly work.

3.8 At the preliminary meeting, the ASME inspector should be informed of all steps in repair of the steam generator. This will include the following:

a. Examination of the area to be welded.

b. Welding material certifications.

c. Method of electrode control.

d. Welding equipment.

e. Preparation of area.

f. Plugging of tube ends.

g. Preheat procedures. No preheat required unless temp. is below $60^{\circ}F$.

h. Manual Inconel overlay welding procedure.

i. Liquid penetrant inspection of final overlay surface.

j. Post weld heat treatment procedure and recording.

k. Manual Inconel welding procedure for partition plate weld.

l. Penetrant test of completed weld.

m. Any additional steps in fabrication.

n. Pressure test of secondary sides.

o. Penetrant test of any areas where assembly lugs or other attachments have been removed.

3.9 Due to the flexibility permitted ASME inspectors to determine compliance with all the requirements of Section III Nuclear Vessel Code, it is necessary to recognize that individual preferences will exist. It is therefore necessary to establish a mutually agreeable schedule of inspection points and method of notification with the local inspector.

3.10 It is required that a log be kept of the various inspection points to insure no oversight in notification. It is very important that there be no gaps in this procedure, as this could delay or result in complete rejection of the parts

or system by AEC.

3.11 Quality Control Record Requirements:

a. All welding shall be recorded on Westinghouse Form TA00007.

b. Liquid penetrant inspection and 5X inspection information Shall be recorded on Westinghouse Form TA-00008.

c. All post weld heat treatment information shall be recorded on Westinghouse Form TA00009.

d. Ultrasonic testing shall be recorded on Form SP-3534-A.

3.12 All Quality Control records shall be returned to Westinghouse, Tampa, at completion of all work.

Samples of the required Q.C. froms are included as part of this procedure.

4.0 Weldor Qualification

All weldors must be qualified prior to any welding to the requirements of ASME Boiler and Pressure Vessel Code, Section IX, and Westinghouse Weldor's Qualification Test NP-WQ-11, NP-WQ-12, and NP-WQ-14.

5.0 Equipment and Tools

5.1 Required by contractor performing scope of this procedure.

a. Scaffolding and inclosures.

b. Welding machines such as Westinghouse type SR Weldor or equivalent.

c. Welding machine - Typical 800 Amp for air arc application.

d. Applicable lengths of cable for welding machines.

e. Arc-air torches, cable and hose.

f. Electrode baking oven - $525^{\circ} \pm 25^{\circ}$

g. Asbestos pads - 1" - 3" thick x 36" wide x 10' long.

h. Vacuum cleaners and applicable lengths of hose.

i. Air blowers and air evacuators.

j. Extension lights.

k. Chipping hammers and chisels.

l. Electric sander.

m. Electrical or air grinders.

n. Tempilstiks - no lead foil wrap permitted.

o. Cum-A-Long 1½ ton.

p. Safety glasses, goggles, welding hoods, grinding shields, gloves, asbestos gloves, welding jackets, welding sleeves, and zipper type coveralls.

6.0 Repair Procedure

6.1 Install movable wooden flooring as required.

6.2 Install plastic tube caps or silicone plugs (1st 5 rows) both sides of divider plate. Install fire proof tube sheet covering.

6.3 Grind through cladding to base metal for a severing line. This cut shall be made at outer edge of tube welds on first row of specified, damaged tubes.

6.4 Arc air partition plate at tube plate juncture for prescribed length - have approximately 1" at each end. Remove fillet weld as required and sever approximately as per attached sketch. (6.4)

6.5 Skin cut with an arc torch (flat and round electrodes), lifted and bonded cladding, including tube ends of first row of damaged tubes to approximately ¼" from sever line.

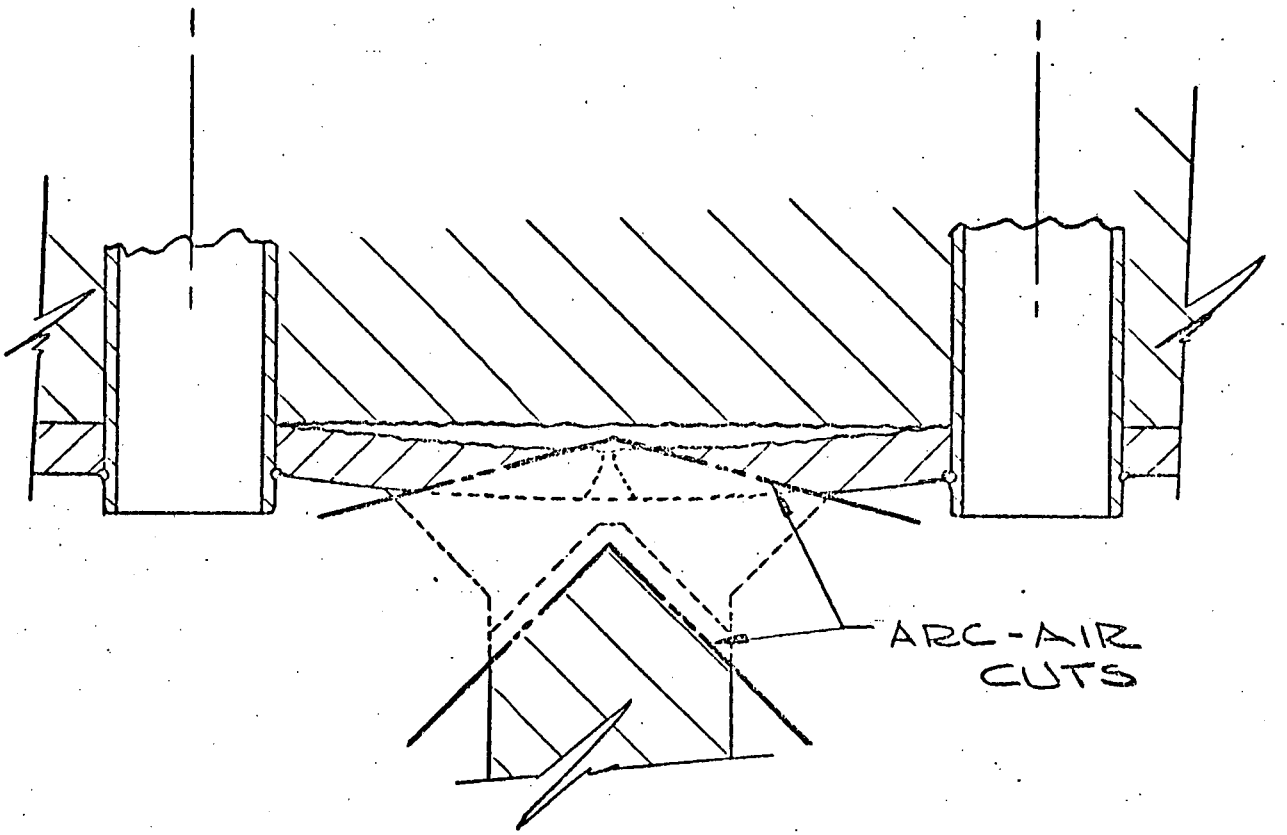

SKETCH 6.4
PARTITION PLATE ARC-AIR CUT

6.6 Grind out remaining widened tube lane cladding to base metal, blending into sever line. This includes the ripple patter characteristic of explosively bonded cladding as P.T. preparation.

6.7 P.T. for unbonded cladding at interface of Inconel and base material.

6.8 P.T. base material lane.

6.9 Deburr ground down tube I.D.'s at base metal level for tapered plug insertion.

6.10 Drive plugs in tightly and burn and grind flush .

6.11 Manually clad overlay weld tube lane sufficiently to restore to tube sheet interface. All welding to process specification NPT-11.

6.12 Restore divider geometry at approximately 45° double bevel with 1/8" land - by arc air and grinding.

6.13 Grind, if necessary, to prepare tube lane cladding for P.T.

6.14 P.T. second row of tubes complete, both sides of divider plate, O.D. surfaces.

6.15 P.T. tube lane cladding.

6.16 5x partition plate geometry.

6.17 Repair defects following standard practices and procedures, and reinspect as required..

7.0 Post Weld Heat Treatment

7.1 Install heating units below weld in accordance with attached instructions and perform post weld heat treatment in accordance with Section III of the ASME Boiler and Pressure Vessel Code titled "Nuclear Vessels", Article 5, Paragraph N-532 and Paragraph N-533.

a. The maximum rate of heating shall be 100°F/hr. and there shall be a difference no greater than 150°F between any of the T.C.'s.

7.2 Soaking time/temperature relationships will be as follows:

a. The 16TC's as shown on Sketch "A" will be used for acceptance criterion in meeting code requirements during the soaking period.

b. The 4 TC's shown on Sketch "B" will be used in conjunction with those shown on Sketch "A" for the purpose of controlling heating/cooling rates to avoid detrimental gradients.

c. Soaking time at temperature will be governed by the temperature of these 20 TC's, and the band spread between them.

1100 - 1150°F	One hour holding time
1050 - 1100°F	Two hours holding time
1000 - 1050°F	Three hours holding time

d. The above limitations are based on a differential of 25°F to 50°F. In the event this range cannot be maintained, a maximum of 100°F is permissible provided the minimum temperature experienced is not less than 1000°F, or the maximum temperature experienced is not greater than 1150°F.

e. Soaking time cannot commence until the minimum TC's temperature reaches 1000°F and a band spread of less than 100°F is achieved.

f. Under no circumstances shall any TC's reach temperature greater than 1150°F.

7.3 Clean and prepare overlay weld for liquid penetrant inspection.

7.4 Liquid penetrant inspect overlay.

8.0 Partition Plate Repair

8.1 All welding to Process Specification NPT-12.

8.2 5x partition plate prep.

8.3 Weld divider plate, to overlay weld using full penetrantion and liquid penetrant inspect back chip.

8.4 Finish fillet weld. See sketch 8.3 for completed weld repair.

8.5 Liquid penetrant partition weld and accessible overlay weld.

8.6 Perform secondary side pressure test at 800 psi and check for leaks. Repair as required and retest.

8.7 UT P.S. 84350 LA all accessible areas adjacent to partition plate clad repair. Additional UT check on approximately one foot centers of remaining tube plate.

9.0 Final Cleaning

9.1 Remove all shielding and accessories.

9.2 Wire brush ends of all tubes exposed during repair.

9.3 Vacuum clean the inside of the channel head including all nozzle areas and manway to remove any foreign particles that might be present.

9.4 Pass a magnet over the bottom of the coolant channel and in all nozzles and manways to collect any magnetic particles that might be present.

9.5 Wipe off all internal surfaces and tube sheet cladding openings and exposed tube ends, using a clean lint-free cloth moistened with alcohol (W-M-51100BM).*

9.6 Visually inspect all internal surfaces and drain pipes, use mirrors if necessary to insure the absence of extraneous matter.

10.0 Quality Control Audit

* W-M-51100BM - Alcohol containing no more than 1 ppm Chloride.

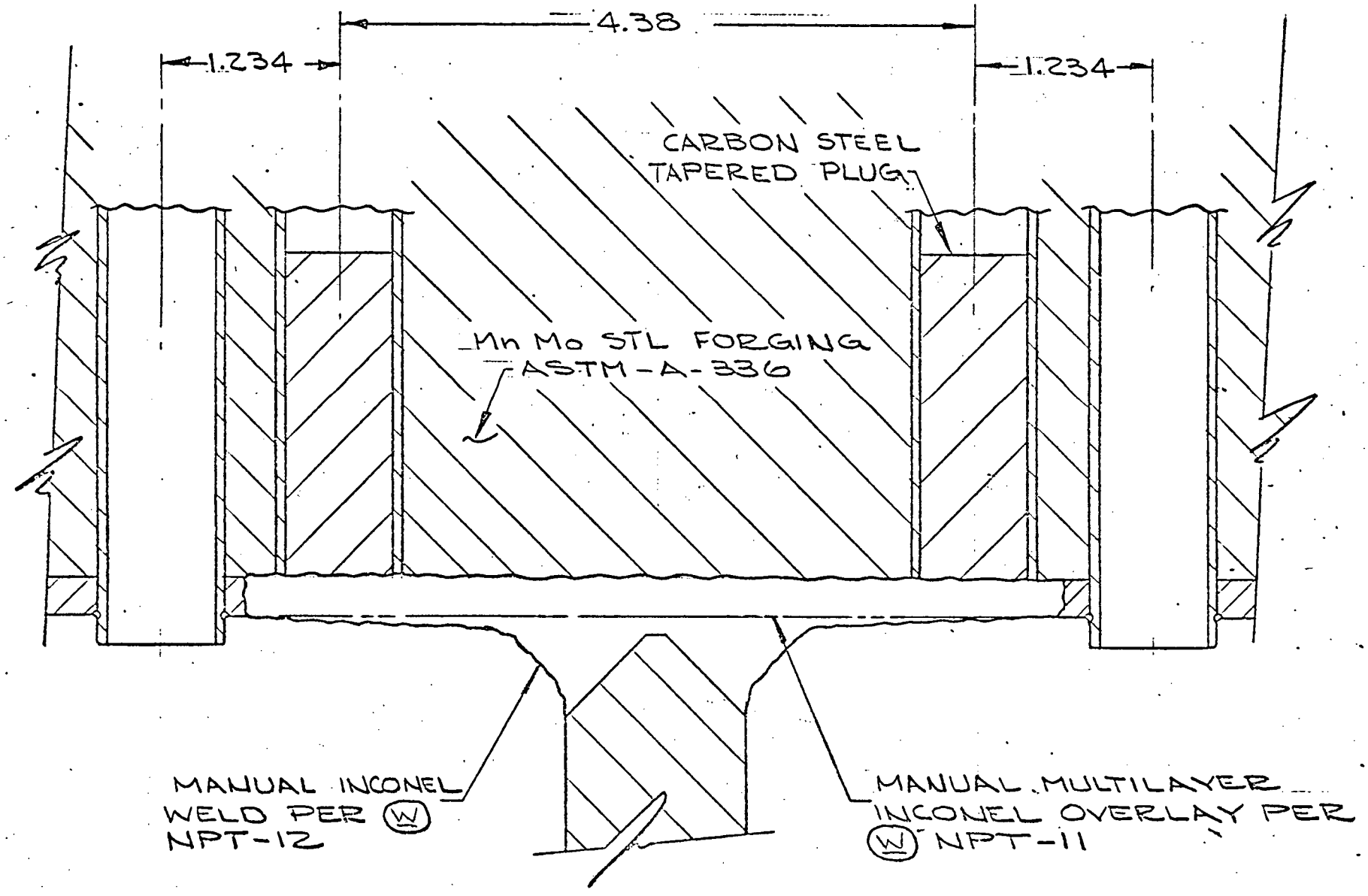

SKETCH-8.3
COMPLETED WELD REPAIR

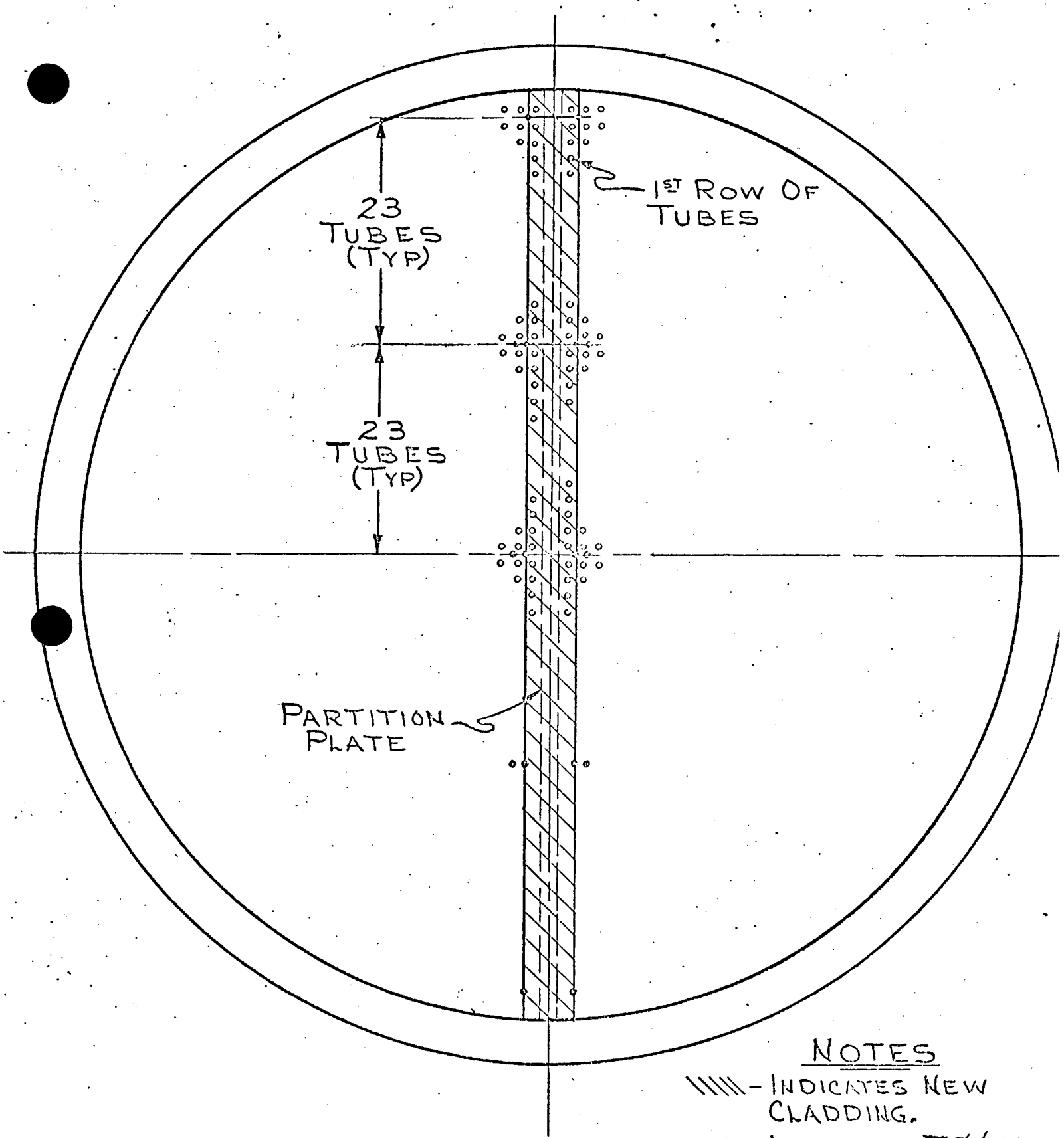

NOTES

\\\\\\ - INDICATES NEW CLADDING.

⊙ - INDICATES T.C. (16 TOTAL ON TUBE R.)

SKETCH (A)

TC LOCATIONS

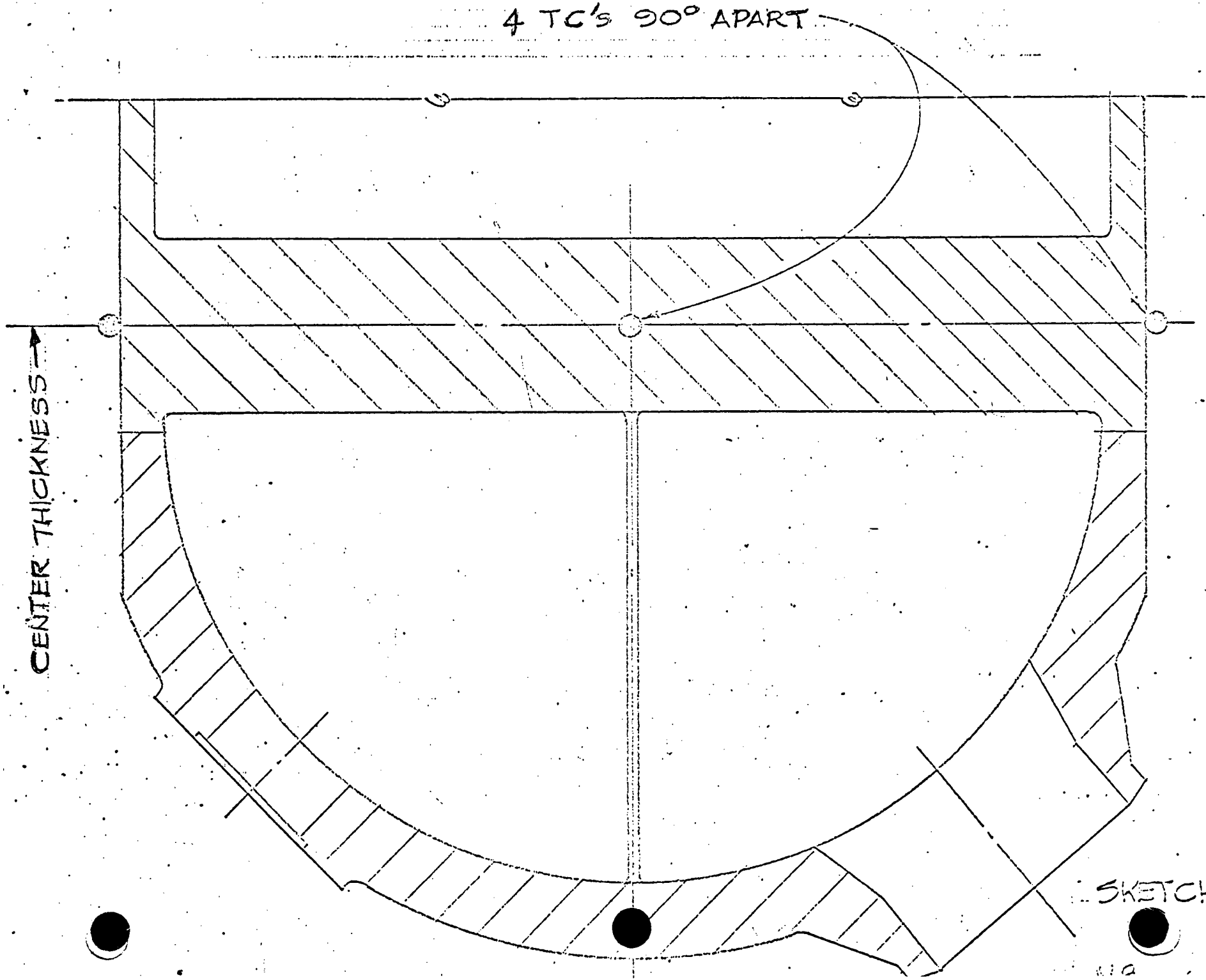

SKETCH B

SKETCH

Changed
7/6/71 2

PREFACE

A. PURPOSE: This specification covers the overlay welding of Inconel on carbon (P-1) and low alloy (P-12) steels, by the manual shielded metal arc method.

B. PROCESS QUALIFICATION: This process has been qualified to meet the intent of the specifications of ASME Nuclear Vessel Code, Section III.

C. MATERIALS:

(1) The metals to be overlay welded under this specification are specified in ASME Welding Qualifications Sect. IX, as P-1 and P-12 materials. The Inconel overlay is specified as P-43.

(2) The test numbers of all parts and the lot numbers of welding electrode shall be identified and recorded before any welding is begun.

D. WELDOR IDENTIFICATION: Quality Control shall keep a record of the overlay welded areas in a vessel and of the weldors and welding operators used.

MANUAL SHIELDED METAL-ARC WELDING METHOD

A. QUALIFICATION OF WELDORS: Weldors qualified in accordance with W Weldors Qualification Test W.Q. NP-WQ-11 may be assigned to weld under this process. W Weldors Qualification Test W.Q. NP-WQ-11 is in accordance with ASME Boiler and Pressure Vessel Code Section IX.

B. MATERIALS:

(1) Filler Metal -

a. For manual welding use W PDS 15165BK equivalent to ASTM-B-295, Class E-Ni Cr Fe-3.

b. Approved diameter is 1/8".

(2) Electrode Baking: All electrodes removed from a container shall be baked for a minimum of 1 hour at 525 ± 25°F, prior to welding. Electrodes shall not be exposed to the air for longer than 4 hours without being rebaked at 250 ± 25°F for 8 hours before using. Electrodes which have become wet shall be discarded.

C. EQUIPMENT: The source of welding current shall be a W type SR welder or equivalent.

D. PREPARATION FOR CLADDING:

Cleaning: The surface of plates, forgings and other parts to be overlay welded shall be thoroughly cleaned of all scale, rust, oil, grease or other foreign materials. All sulfur bearing and chloride bearing materials, including marking crayons and tempilstiks must be removed prior to cladding. Rust, scale and other tenacious materials shall be removed by means of power wire brushing,

Changed
2 7/6/71

D. (Continued)
shot blasting, chiseling or grinding. Stainless steel wire brushes and grinding wheels which have not been used for materials other than Inconel shall be used. Oil and grease shall be removed by successively using the solvents listed below.

(W)	Solvent
PDS 55812 CJ	Petroleum Distillate
M-51100 BM	Denatured Alcohol

E. MANUAL SHIELDED METAL ARC WELDING:

(1) Preheat and Interpass Temperature - the preheat shall be 60°F min. The interpass temperature shall not exceed 400°F.

(2) Equipment Settings -

a. Current - DC

b. Polarity - Reverse polarity (electrode positive) shall be used.

c. Setting -

Amperage	Electrode Dia.
80 - 90	1/8

d. Voltage - maintain a short arc with the arc voltage between 23 - 24 volts.

(3) Position - Welding shall be done in the overhead position.

(4) Technique -

a. A stringer bead technique is preferred but a weave of 2½ times the electrode core diameter is approved.

b. An overlap of 30-50% is required to limit dilution.

(5) Weld Bead Treatment

a. All slag remaining on a weld bead shall be removed prior to deposition of the next bead by a scaling hammer or stainless steel wire brush which has not been used for materials other than Inconel or stainless steel. Remove all visible defects and surface irregularities that may impair sound deposition of additional beads.

b. No peening is allowed.

c. Starts and stops must be staggered on successive passes.

d. When breaking the arc for any purpose, the crater should be filled,

Issue 1
6/[illegible]/71
T. Brown

Changed
7/6/71 2

E. (5) d. (Continued)
then the arc should be shortened slightly and then quickly withdrawn from the molten pool. Re-strikes should be made using a reverse or "T" type technique. The arc should be struck at the leading edge of the crater and carried back to the rear edge of the crater, then reversed and a slight oscillation technique employed to remelt the re-strike area.

F. POST WELD HEAT TREATMENT:

(1) Technique. Heat treating shall be performed upon completion of the overlay welding as follows:

a. Thoroughly clean in accordance with D. Preparation for Cladding.

b. Heat at 100°F/hr. max.

c. Hold at 1125 ± 25°F for 1 hr.

d. Cool at 100°F/hr. to 600°F max.

e. Remove heat source and cool to room temperature.

(2) Thermocouples

Thermocouples shall be located to measure the temperature at the anticipated hottest point on the weldment and at the anticipated coolest point. The number of thermocouples provided shall assure complete coverage of the weldment and adequate temperature history. Thermocouples shall be attached so as to be in metallic contact with the weldment. All heat treating operations shall be recorded by potentiometers furnished with autographic records.

G. INSPECTION
Unless otherwise specified the following inspection techniques shall be used:

(1) Visual using 5 power lens for first layer only.

(2) Penetrant method per Process Specification 84350 JA for final layer.

H. REPAIR WELDING

Repair welding may be conducted as follows:

(1) Prior to repair welding in the first layer of multi-layer cladding, the cut-out shall be visually inspected with a 5x lens to assure removal of defective cladding. Repairs which extend into the base metal shall be dye penetrant inspected per P.S. 84350 JA to assure removal of the defect. All other cut-outs shall be dye penetrant inspected per P.S. 84350 JA prior to weld repair.

(2) Prior to weld repair, Quality Control will check the depth of the grind-out.

H. (2) a. If the base metal is not exposed to a depth greater than 3/32 inch or 10 percent of the base metal thickness, whichever is the lesser, and to any individual area greater than 10 square inches, a non-post-weld heat treated weld repair is permissible using the bead temper technique.

b. If the grind-out is within 1/16" of the base metal or is in the base metal but does not meet the requirements of paragraph a. (above) a post-weld heat treatment is required.

c. If the grind-out is not within 1/16" of the base metal, the weld repair does not require a post-weld heat treatment.

I. CERTIFICATION

Manufacturer's Report of Welded Repairs or Alterations, Lumberman's Mutual Casualty Company, Form ZRK 68-70 2M shall be filled out and signed by the manufacturer and the code inspector.

Changed	
2	7/6/71

WELDOR'S QUALIFICATION TEST

MANUAL SHIELDED METAL - ARC WELD CLADDING WITH INCONEL TYPE ALLOYS

T. Brown
Changed
7/6/71 2

(A) Purpose:

(1) The following test procedure shall be used for qualifying a weldor to perform the welding techniques covered in process specification NPT-11.

(2) All welding shall be done in accordance with the intent of the ASME Boiler and Pressure Vessel Code, Sections III and IX.

(B) Test Required:

Welding - each operator shall weld one test plate in the overhead position manually (4G). (See Figure 1). Welding in the (4G) overhead position shall also qualify the weldor to weld in the flat (1G) position but not vice-versa.

(C) Materials:

(1) This qualification test will cover those materials listed in process specification NPT-11.

(2) Test plate material may be suitable ASME P-1 or P-12 material; SA-533, Grade A, Cl. 1, SA-515 and SA-516 are examples of material which may be used.

(3) The filler metal shall conform to W-M-15165BK 1/8" Ø.

(D) Welding: All welding, etc. shall be carried out in full conformity with process specification NPT-11. (See note.) The welding may be witnessed by the ASME Code Inspector if he so desires.

Note:

Post weld heat treatment of test plates shall be performed as follows:

(1) Charge in furnace at temperature of not over 600°F.

(2) Heat at 100°F/hr. max. to 1100° min. at which time soaking period begins.

(3) Hold at 1125° ± 25° for 1 hour.

(4) Cool at 100°F/hr. to 600°F max.

(5) Remove from furnace or furnace cool to room temperature.

(E) Testing:

(1) Visual inspection using a 5X lens or higher shall be conducted on completion of the first layer of deposited cladding. The as welded clad surface of the block shall be examined by dye penetrant inspection according to PS 84350 JA. The overlay may be ground to facilitate dye penetrant inspection.

(2) Destructive testing shall be performed on specimens indicated on Figure 1 and meet the requirements of the ASME Code, Section III and IX.

WELDOR'S QUALIFICATION TEST

MANUAL SHIELDED METAL - ARC WELD CLADDING WITH INCONEL TYPE ALLOYS

FIGURE 1

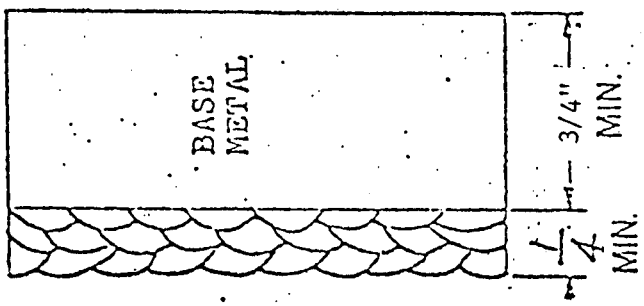

NOTE:
4" THICK BASE PREFERRED

PASS SEQUENCE

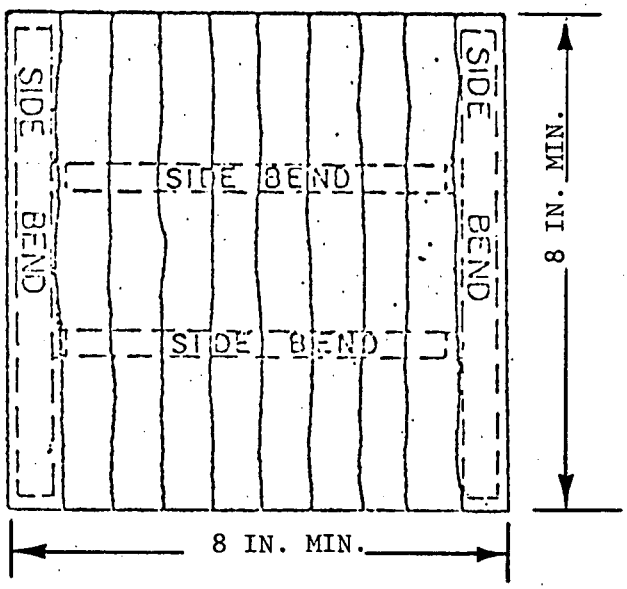

Joint Design
Flat Clean Plate

Side Bend Specimen

NOTE: Radius all edges 1/8" max.

Polish both faces after machining

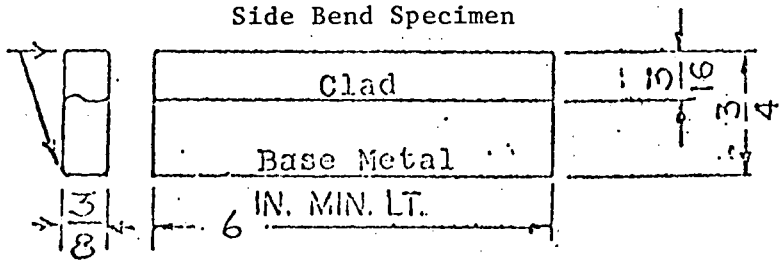

Finished dimensions should be plus or minus 1/64".

Issue 1
6/7[illegible]1
T. Brown

Changed

/6/71	2
/23/71	3
/12/71	4

PREFACE

A. SCOPE: This specification covers the manual shielded metal arc welding of Inconel to Inconel (P-43), Inconel (P-43) to stainless steel (P-8).

B. PROCESS QUALIFICATION: This process has been qualified to meet the intent of the specifications of ASME Nuclear Vessel Code, Section III.

C. MATERIALS:

(1) The metals to be manually welded under this specification are listed below:

Inconel (P-43) to Inconel (P-43)
Inconel (P-43) to Stainless Steel (P-8)

NOTE: Inconel overlay weld is classified as P-43 material and stainless overlay as P-8.

(2) The test numbers of all mating parts and the lot numbers of welding electrodes shall be identified and recorded before any welding is begun.

(3) Materials for pressure parts shall carry identification markings. No stamping shall be done.

D. WELDOR IDENTIFICATION: Quality Control shall keep a record of the welded joints in a vessel and of the weldors used in making each of the joints.

MANUAL WELDING WITH INCONEL TYPE FILLER METAL

A. QUALIFICATION OF WELDORS: Manual weldors, qualified in accordance with Westinghouse Weldor's Qualification Test W.Q. NP-WQ-12 or WQ-305 may be assigned to weld under this process. These Westinghouse weldor's qualification tests are in accordance with ASME Boiler & Pressure Vessel Code, Section IX.

B. MATERIALS:

(1) Filler Metal:

a. For manual welding use W-PDS-15165BK equivalent to ASTM-B-295, Class E-Ni Cr Fe-3.

b. Approved diameters are 3/32", 1/8" & 5/32".

(2) Electrode Baking: All electrodes removed from a container shall be baked for a minimum of 1 hour at 525 ± 25°F, prior to welding and stored in an oven maintained at 250°F ± 25°F. Electrodes shall not be exposed to the air for longer than 4 hours without being rebaked at 250 ± 25°F for 8 hours before using. Electrodes which have become wet shall be discarded.

C. EQUIPMENT: The source of welding current shall be a W SR welder or equivalent.

Changed	
2	7/6/71
3	7/23/71
4	8/12/71

D. JOINT PREPARATION:

(1) Cleaning:

a. The surfaces of all plates, bars, pipes, forgings or other parts to be joined shall be thoroughly cleaned of oxide films, scale, oil, grease or other foreign materials. Sulphur bearing material including crayon, marking pencils and Tempilstik marks must be completely removed.

b. Power wire brushing, chiseling or grinding may be used for removing scale and other tenacious mtls. Stainless steel wire brushes which have not been previously used on metals other than Inconel or stainless shall be used in this specification.

c. Oil and grease shall be removed by successively using the solvents listed below:

(W)	Solvent
PDS 55812 CJ	Petroleum Distillate
M-51100BM	Denatured Alcohol

d. The surface of the base metal and the backing rings or strips shall be free of oil, grease, cutting fluids and other materials and impurities for a minimum of two (2) inches on either side of the joint.

(2) Equipment:

a. Bronze or lead hammers and chains, slings or straps, having a lead or zinc coating shall not be employed when handling Inconel and stainless steel components.

b. All wire brushing shall be conducted with stainless steel wire brushes, which have not been used on any metal other than stainless steel or Inconel.

c. Grinding shall be conducted with resin-bonded aluminum oxide or silicon carbide wheels. Residue from grinding shall be removed prior to welding.

d. Filing or deburring operations shall be conducted with carbide files or deburring tools.

(3) Tack Welding:

a. Jigs, fixtures, clamps and braces shall be employed to the maximum extent practicable to establish and maintain alignment of the joint.

b. All tack welds shall be made by NP-WQ-12.

Issue 1
6/[illegible]/71
T. Brown

Changed

7/6/71	2
/23/71	3
3/12/71	4

D. (3) c. Tack welds shall be removed completely or their stopping and starting ends shall be ground down so that they may be satisfactorily incorporated into the final weld. Tack welds made by a weldor not qualified to this specification must be removed completely.

d. Tack welds shall be visually examined and defective tack welds shall be removed.

e. The tack welded areas from which temporary attachments have been removed from Inconel or stainless steel shall be dressed smooth and penetrant inspected to P.S. 84350 JA.

E. WELDING:

(1) Preheat Temperature:

a. Minimum preheat 60°F.

(2) Interpass Temperature:

a. Maximum interpass temp. shall be 350°F.

b. Preheat and interpass temperature shall be measured by Tempilstiks or contact pyrometers (see Paragraph D(1) for cleaning off Tempilstiks.)

(3) Equipment Settings:

a. Polarity: Reverse polarity (electrode positive).

b. Amperage: (Relative to electrode size.)

Electrode Size (Dia.")	Amperage Range
3/32	40-65
1/8	65-95
5/32	95-125

c. Voltage: A short arc should be maintained with arc voltages from 23-24 volts. Arc drive setting should be in the off position.

(4) Position:

a. Wherever possible all welding shall be done in the overhead position.

(5) Technique:

a. For welding root layer, 3/32" or 1/8" dia. may be used. Above the root layer use 1/8" or 5/32" dia. electrode.

b. A stringer bead technique is preferred but a weave of 2½ times the electrode core diameter is allowed.

(6) Weld Bead Treatment:

Changed	
2	7/6/71
3	7/23/71
4	8/12/71

E. (6) a. All slag remaining on a weld bead shall be removed prior to deposition of the next bead by a hand or pneumatic scaling hammer and stainless steel power wire brush. Remove all visible defects and surface irregularities that may impair sound deposition of additional beads.

b. Peening shall not be permitted.

c. Starts and stops shall be staggered on successive passes.

d. When breaking the arc for any purpose, the crater should be filled, then the arc should be shortened slightly and quickly withdrawn from the molten pool. Restrikes should be made using a reverse or "T" type technique. The arc should be struck at the leading edge of the crater, then reversed and a slight oscillation technique employed to remelt the restrike area.

F. POST WELD HEAT TREATING:

(1) Special: The following combinations of welded materials do not require heat treating.

Inconel to Inconel

Inconel to Inconel clad (bond clad or weld clad to P.S. NPT-11; previously heat treated).

Inconel clad to austenitic stainless steel (bond clad or weld clad to P.S. 82148 RF; previously heat treated).

G. INSPECTION:

Unless otherwise specified the following inspection technique shall be used:

(1) Penetrant Method - Proc. Spec. 84350 JA final surfaces.

H. REPAIR WELDING:

(1) Preparation for repair welding:

a. After determining the location of the indication, the area shall be marked with a crayon. The indication shall be ground or chipped out. A penetrant check shall be required to assure removal of the indication.

b. Complete removal of all the weld, thus resulting in a hole, is to be avoided because of difficulties in welding.

c. When back-chipping or grinding, the sides of the groove shall be opened to a 60° minimum included angle to allow the weldor sufficient manipulation area. No sharp ridges or corners shall be allowed.

(2) Repair Welding:

Changed

7/6/71	2
/23/71	3
3/12/71	4

H. (2) a. Position: All repair welding shall be positioned for overhead welding.

b. Preheat: Minimum preheat 60°F.

c. Welding Current: Direct current, reverse polarity shall be used. The current ranges for the various size electrodes are shown in Para. E-3-b.

d. All slag remaining on a weld bead shall be removed prior to deposition of the next bead by a hand or pneumatic scaling hammer and stainless steel wire brush. Starting tabs may be used, if the location and geometry allow. Chip or grind cut any visible defects and any undercutting which might trap slag.

e. A stringer bead technique is preferred but a weave of 2½ times the electrode core diameter is allowed. The surface of the finished weld shall be ground smooth if required for liquid penetrant inspection.

f. When starts cannot be removed, arc-strikes should be made using the "T" technique wherein the weldor strikes the arc approximately ½" ahead of the start of the weld, then moving back to the starting point, weaving slightly and then proceed with normal weld progression.

(3) Inspection:

All repair welds shall be re-examined by the original methods which found the indications.

I. CERTIFICATION:

Manufacturer's Report of Welded Repairs or Alterations, Lumberman's Mutual Casualty Company Form ZRK 68-70 2M shall be filled out and signed by the manufacturer and the code inspector.

Changed
3/12/71 2

WELDOR PERFORMANCE TEST - MANUAL SHIELDED METAL - ARC WELDING IN THE OVERHEAD (4G) POSITION. INCONEL TYPE ALLOYS

(A) Purpose: (1) The following test procedure shall be used for qualifying a weldor to perform the welding techniques covered in Process Specification NPT-12 in the overhead (4G) position.

(2) All welding shall be done in accordance with the intent of the ASME Boiler and Pressure Vessel Code, Sections III and IX.

(B) Test Required:

Welding - each weldor shall manually weld one test assembly in the overhead (4G) position. See Figure No. 1.

(C) Materials:

(1) This qualification test will cover those materials listed in Process Spec. NPT-12.

(2) Test plate material may be suitable ASME P-1 or P-12 material; SA-533, Grade A, Cl. 1, SA-515 and SA-516 are examples of material which may be used.

(3) The filler metal used shall conform to W-M-15165BK.

(D) The welding shall be carried out in full conformity with process specification NPT-12 and may be witnessed by the ASME Code Inspector if he so desires.

(E) Testing: The test weld shall be examined on final surfaces by dye penetrant in accordance with Process Spec. 84350 JA.

Destructive testing shall be performed on specimens indicated in Figure 1 and meet requirements of ASME Code Section IX.

Note: Weldors qualified in accordance with W Tampa Division WQ-305 (5G position) are qualified for NP-WQ-12 (4G position) in accordance with ASME Section IX Welding Qualifications.

WELDOR PREFORMANCE TEST - MANUAL SHIELDED METAL - ARC WELDING
IN THE OVERHEAD (4G) POSITION. INCONEL TYPE ALLOYS

FIGURE 1

Typical Joint Dimensions

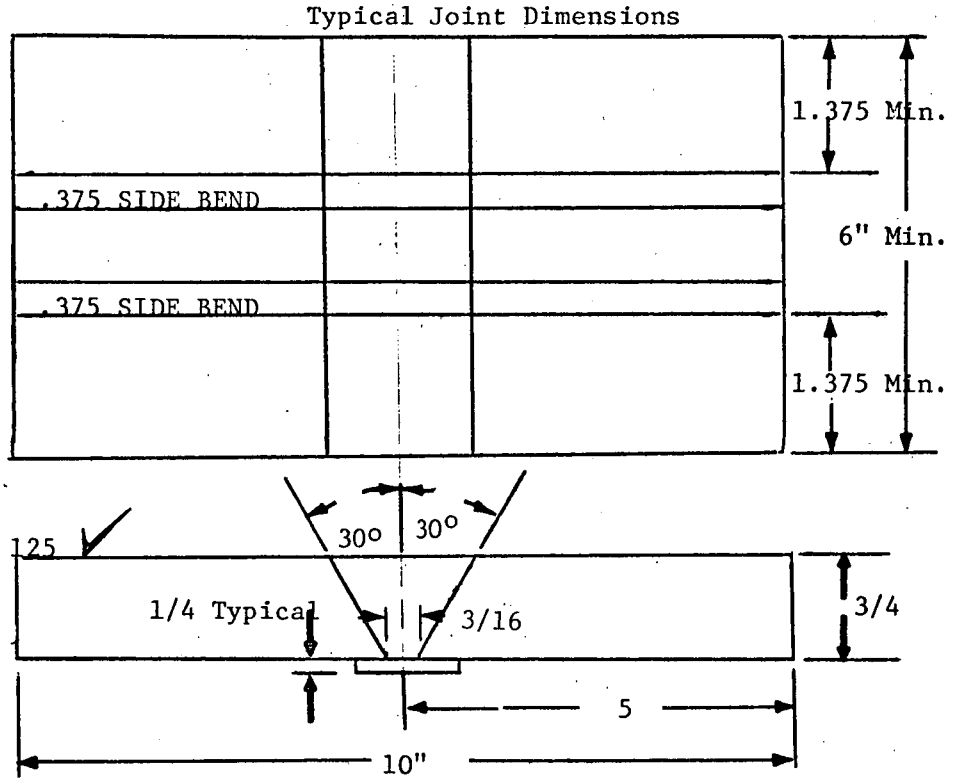

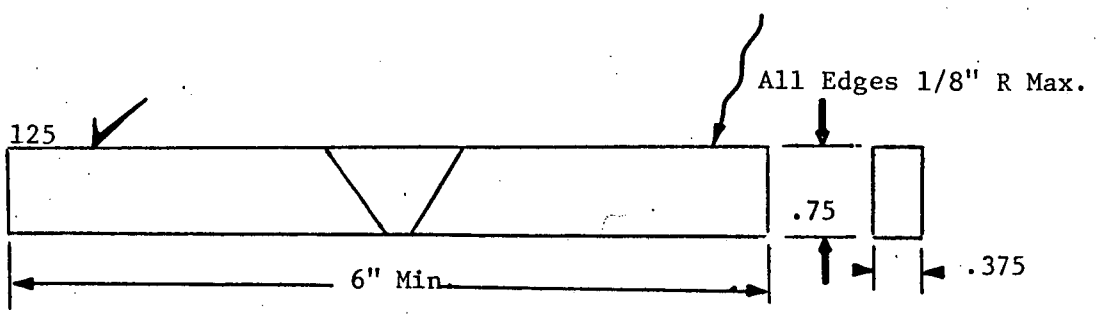

TYPICAL SIDE BEND

PART I

A. SCOPE: This specification covers the manual welding of nuclear power components by the non-consumable electrode inert gas shielded arc method.

B. PROCESS QUALIFICATION: This process has been qualified to meet the intent of the ASME Boiler & Pressure Vessel Code, Section III.

C. MATERIALS:

(1) The material to be welded under this specification is specified in ASME Welding Qualifications, Section IX, as Inconel, P-43.

(2) The test numbers of all parts and the lot numbers of welding wire shall be identified and recorded before any welding is begun.

PART II

A. QUALIFICATION OF OPERATORS: Weldors qualified in accordance with Westinghouse Weldor's Qualification Test W.Q. NP-WQ-14, may be assigned to weld under this process. Westinghouse Weldor's Qualification Test is in accordance with ASME Boiler & Pressure Vessel Code, Section IX.

B. MATERIALS:

(1) Filler Metal: The filler metal used shall be W PDS 15165 AZ equivalent to ASTM-B-304 Class ERNiCR-3.

(2) Approved diameter is .045 inches.

(3) Purging or shielding gases - Argon (commercial welding grade W PDS 52118 AA) is used for purging or shielding.

C. EQUIPMENT:

(1) The source of welding current shall be a W type SR or equivalent.

(2) A superimposed high frequency arc starting may be used to prevent any arc strikes on the base metal.

(3) Use 2% thoriated tungsten electrodes (W-M-17830DB) or equivalent, ground as shown in Figure 1 (care shall be taken to avoid waste of fungsten by improper dressing of electrodes).

D. JOINT PREPARATION:

(1) Cleaning:

a. Cleaning shall consist of the removal of all slag, grease, paint or other foreign matters where present. Oil and grease shall be removed by using the solvents listed below consecutively i.e. first petroleum distillate then alcohol.

W	SOLVENT
PDS-55812CJ	Petroleum Distillate
M-51100BM	Denatured Alcohol

P. Loch
Changed

b. It is especially important that organic materials (soap, oil, paint, spinning compounds, etc.) be removed from the heated zone since they will decompose and contaminate the shielding gas. Particles of grinding dust from fitting operations must be blown or wiped from all heated surfaces.

c. Cleaning should be extended, at least, to all areas which will become heated severely enough to scale (about one inch on each side of the joint for most welds).

d. Any wire brushing on stainless or Ni Cr Fe alloy shall be done using stainless steel wire brushes which have not previously been used on any other type materials. Any grinding of stainless or Ni Cr Fe alloy shall be done using rubber or resin-bonded, aluminum oxide or silicon carbide wheels.

e. Before welding all burrs shall be removed and the pieces brought into contact with each other. Rough edges (saw cut, etc.) must be smoothed before fit-up. Sheared surfaces, if clean and sharp, need not be deburred.

E. WELDING:

(1) Preheating:

a. Min. preheat of 60°F required.

b. Tempilstiks, thermocouples or contact pyrometers shall be used to measure preheat and interpass temperature.

(2) Interpass Temperature: Interpass temperature requirements shall be 400°F, maximum.

(3) Equipment Settings:

a. Polarity: Direct current straight polarity is to be used with argon or helium gas for producing joints under this spec.

b. Welding parameters are shown in Fig. 1 at the end of this specification.

(4) Position: The qualified welding position shall be overhead (4G).

(5) Technique:

a. Approximate current and gas flow settings, and electrode and rod diameters are listed in Figure 1, and should be used as a guide.

b. A stringer bead technique shall be used with weaving not to exceed 1/4 the gas cup orifice diameter.

c. The arc may be broken by using a weld current tapering attachment which automatically decreases the current to a point where this arc is extinguished. Also the arc may be broken at a location which will be removed from the part (e.g., machined or ground off or on tabs.). Moving the arc onto the base metal shall be done only when necessary.

P. Loch

Changed

E. (5) c. (Continued)

The arc should be gradually lengthened to prevent cracks, then finally broken. After welding, the electrode should be silver colored. Any other color indicates gas contamination or the gas was shut off too quickly after welding.

d. Replace argon bottles when gas gauge pressure is reduced to 25 psi.

(6) Weld Bead Treatment:

a. Where more than one pass is required to complete a weld, all oxide remaining on each pass shall be thoroughly removed before making the succeeding pass. Also, any visible defects that might interfere with the making of a sound weld shall be removed before depositing the next pass.

b. Where a weld must cross another previously deposited weld, the previously deposited weld at the intersection shall be chipped, gouged, or machined to form the welding groove.

c. No peening of deposited weld metal is allowed.

d. All completed welds shall be free of oxide scale and blend smoothly into the adjacent base metal.

e. All completed welds shall be free from undercut or other depressions at the edge of the weld in excess of 1/64."

f. Thickness of reinforcement on either face of a weld shall be no greater than 1/16" for base metal thickness 1/4" and no greater than 1/8" for base metal thickness 1/4" and over.

g. Care must be taken to prevent organic compounds (oil, soap, masking tape, grinding wheel dust, etc.) from decomposing in the heated zone and destroying the shielding effect of the gas.

h. In the event the electrode contacts base metal or filler metal during welding, extinguish arc immediately as specified in 5 c. If electrode has become "stuck", turn off power and remove from work. Redress electrode end per Figure 1. Cut off and discard filler wire 1/4 inch beyond point of contact. When base metal or deposited weld metal has been contacted or "stuck", grind this area to a depth equal to 1-1/2 times the thickness of weld metal bead that was being deposited at the time of contact with the sides of the ground cavity flared outward in a 4:1 taper. Visually inspect and reweld the cavity. When these incidents occur in the root layer, the area shall be restored to the original joint geometry.

F. POST WELD HEAT TREATMENT: No post weld heat treatment required.

P. Loch

Changed

G. INSPECTION:

(1) All welds shall be inspected as follows: Visual, using 5X lens, dye penetrant method per P.S. 84350 JA.

(2) No cracks or inclusions shall exist on either side of the bead.

(3) The surfaces and width of all beads and fillets shall be reasonably uniform and free of intermittent hollows and/or bumps.

(4) Porosity: No visual porosity shall exist in the weld.

(5) All of the above defects amy be repaired by the method outlined in Section H below.

H. REPAIR WELDING:

(1) All defects may be repaired in the following manner:

a. Carefully grind out defects.

b. A penetrant inspection per P.S. 84350 JA shall be required to assure removal of this indication.

c. Note that the filler metal shall be added uniformly to the repair weld and inadvertent arc strikes should be avoided. If they occur, they shall be dressed and inspected as outlined in Para. E. 6 h.

Issue 1
9 71
P. Loch
Changed

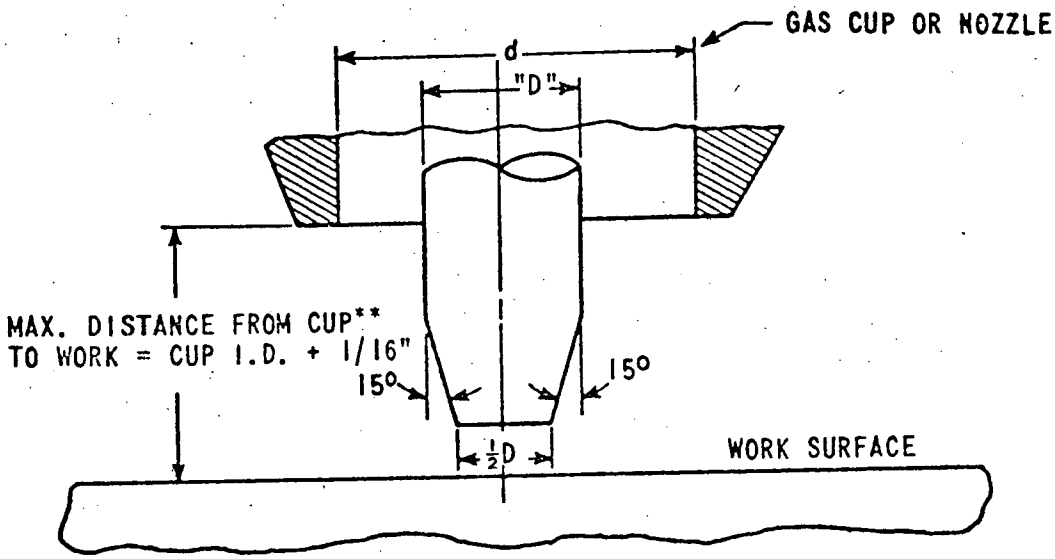

GRIND THORIATED TUNGSTEN ELECTRODE AS SHOWN
DO NOT GRIND TO A POINT
SETTINGS*

CURRENT AMPS DCSP	D ELECT. DIAM.	FILLER ROD DIAM.	ARGON FLOW* AT 20 PSI CF/HR	d CUP OR NOZZLE SIZE
80 - 120	3/32	.045	18 - 20	4 - 7

* All flow values: - 9.0%, + 24 %

** Gas cup spacing is the distance between the gas cup and the work surface to insure adequate gas coverage of the weld.

Figure 1

WELDOR'S QUALIFICATION TEST
WELDING NUCLEAR POWER COMPONENTS TO ASME SECTION III INERT GAS SHIELDED ARC WELDING WITH INCONEL - MANUAL METHOD

A. Purpose:

1. The following test procedure shall be used for qualifying a welding operator to perform the welding techniques covered in NPT-14.

2. All welding shall be in accordance with the intent of the ASME Boiler and Pressure Vessel Code, Section III and IX.

B. Test Required:

The following test assembly shall be welded by each weldor:

To qualify to repair tube-to-tube sheet welds and/or tube welds in the overhead position, a weldor must repair weld 6 tubes per NPT-14 in the overhead position (4G).

C. Materials:

1. This qualification test will cover those materials listed in NPT-14.

2. Tubes shall conform to ASTM B-163 (Ni-Cr-Fe Alloy - 7/8" O.D. by .050" wall size).

3. Tube sheets shall be ASTM A 515 plate or forging clad in accordance with PS 82148 RL or plasma clad per PS 82142 HA.

4. The filler metal shall be W PDS-15165AZ, .045" dia.

D. Welding:

1. The welding shall be carried out in fully conformity with process specification NPT-14, and may be witnessed by the ASME Code Inspector if he so desires.

E. Testing: The qualification test plates, in the as welded condition, shall be submitted unsectioned to the customer for testing, if requested, or the welds shall be examined by the Metallurgy and Quality Control Sections to the following requirements.

1. Dye penetrant test to PS 84350 JA.

2. Inspect radiographically to PS 84350 RT.

3. Metallographically Section to determine following requirements:

   a. The average minimum leak path (throat) through weld metal from the unfused root of all welds in a component or specimen shall be at least 1.25 times the minimum design tube wall thickness, T, with no weld having a leak path less than 1T.

P. Loch
Changed
0/1/71 2

E. (Continued)

b. Welds where the heat from welding has caused weld penetration through the tube (burn through) are not acceptable. In a weld where the heat from welding has caused weld penetration through the tube wall to the inside diameter with no resulting metal flow such as to change the inside contour of the tube (fuse through), the shortest distance along the weld fusion line to the inside surface of the tube shall meet the same minimum leak path requirements as (1) above. No more than 10% of the welds in any component or specimen shall show fuse-through. (See Figure 2).

c. Porosity in the weld is permissible providing it does not reduce the minimum leak path through sound weld metal below minimum requirements. Porosity as determined by sectioning or radiographic inspection shall be limited to one spot in each tube joint for a maximum of 10% of the joints inspected. (See Figure 3).

FIG.1

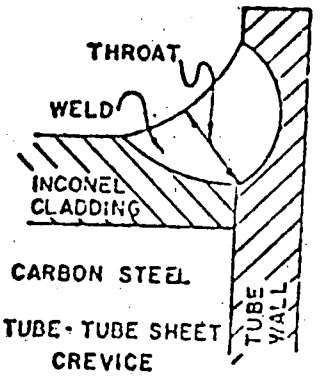

FIG. 2

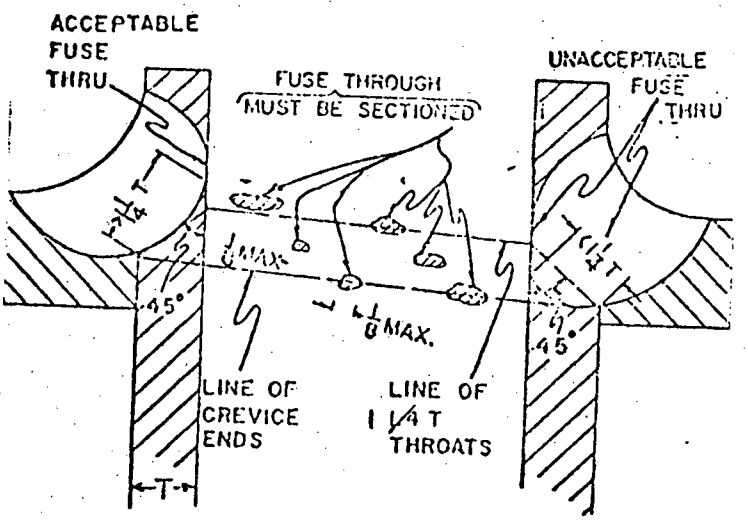

FIG. 3

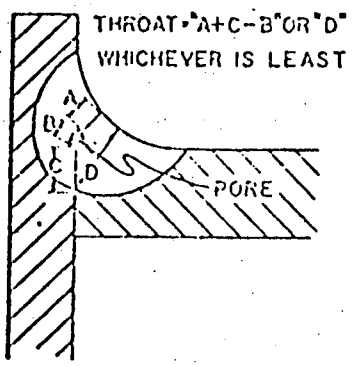

Issue 1
12/[illegible]/69

F.W. Dury
Changed
3/25/71 2

I. Purpose: This Process Specification covers the dye penetrant inspection of materials and weldments for use on nuclear power components.

Part I: Procedure for water wash removal - other than tube to tube sheet welds.

Part II: Procedure for "dry" removal of dye penetrant.

Part III: Procedure for tube to tube sheet inspection, tube plate in vertical position.

Part IV: Procedure for tube to tube sheet inspection, tube plate in horizontal position.

II. Process Qualification: This Process Specification meets the requirements of ASME, Section III and VIII.

III. General: Use of this Process Specification will be indicated by:

A. Drawings with symbols in accordance with AWS A 2.2-69. Typical symbol is:

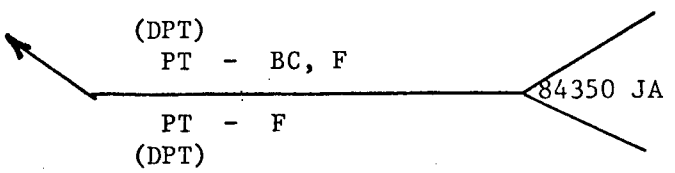

The following abbreviations are to be used with above symbol:

DPT or PT - Dye Penetrant Test

R - Inspection of root pass

BC - Inspection of back chipped weld

F - Inspection of final surface as welded, machined or ground before post weld treatment.

F/SR or F/HT - Inspection of final surface after post weld heat treatment

EA 3/8 - Inspection of each 3/8 in. of deposited weld.

F/HYD - Inspection of final weld after hydrotest.

B. Welding specifications called for on the drawing.

C. Shop work tickets, or other special instructions.

IV. Precautions: The following safe practice data sheets are applicable

S. Wismer 12/7/69	R.H. Anderson 12/16/69	W.H. Richardson 12/31/69
R.P. Wedler 12/22/69	W.P. English 12/23/69	

(IV. Continued)

to this specification:

Material	Safe Practice Date Sheet	W No.
dye penetrant	M - 7	54410-KC
remover	M - 7	54410-KW
developer	M - 7	54410-KE
petroleum distillate	S----6	55812-CJ
alcohol	A----9	51100-BM

V. Equipment:

A. Dye Penetrant Equipment: Aerosol cans, air or CO_2 powered spray guns, or paint brushes may be used to apply the liquids. (Paint brush shall not be used to apply remover or developer).

B. Drying equipment: lint-free materials, vacuum equipment.

C. Lighting: The test area shall be adequately illuminated for proper evaluation of the indications revealed on the test surface.

D. Protective equipment: respirator.

VI. Materials: The following materials shall be used with this specification:

	W No.
Dye Penetrant: dy-chek Turco Products Inc.	54410-KC
Remover: dy-chek Turco Products Inc.	54410-KW
Developer: dy-chek Turco Products Inc.	54410-KE

VII. The temperature of the dye penetrant and the part to be inspected shall be 60°F to 125°F before application of the dye penetrant. When inspection is necessary under conditions where the ambient temperature is outside the 60°F to 125°F range, local heating or cooling is permitted provided the temperature of the dye penetrant and test surface remain in the specified range during the examination.

VIII. Surface Preparation: The surface to be inspected shall be finished to drawing requirements. Where the drawing does not specify otherwise, "As Welded," surfaces shall be considered suitable for inspection without any grinding provided the following conditions are met: There shall be no rollover or undercutting valleys or grooves along the axis of, or within the weld. The deposited metal must be fused smoothly and uniformly into the base metal surfaces. The finished weld shall be reasonably smooth and free from irregularities, grooves or depressions.

F.W. Dury	
Changed	
2	3/25/7

(VIII. Continued)

Rust, scale, slag, weld pimples and other hard tenacious materials shall be removed by wire brushing and/or cautious grinding. All types of grinding wheels are permitted on carbon steels. Other materials shall be ground with rubber or resin-bonded aluminum oxide or silicion carbide wheels which have not been used on any other material. Wire brushing shall be performed with stainless steel brushes each of which shall be used exclusively on a single material type.

Back chipping of welds shall be sufficiently ground to prevent non-relevant indications. Root passes or subsequent layers of welds shall be inspected in the "As Welded" condition provided there is no rollover or undercutting.

With the exception of incomplete welds, all surfaces being tested shall be the finished surfaces. If any metal is removed by grinding, machining or any other method subsequent to the dye penetrant inspection, the entire surface areas so affected shall be re-inspected.

The Westinghouse personnel conducting this test shall determine the acceptability of the surfaces for dye penetrant inspection.

IX. Acceptance Standard: Any indication which is believed to be non-relevant shall be regarded as a defect and shall be re-examined to verify whether or not actual defects are present. Surface conditioning may precede the re-exmaination. Non-relevant indications and broad areas of pigmentation which would mask indications of defects are unacceptable.

Defects shall be evaluated to the acceptance standards below.

A. All surfaces shall be free of all cracks, laps, fissures, and other linear defects; and free of rounded indications when there are four or more such rounded indications in a line and each is separated from the adjacent indications by 1/16 inch or less edge to edge.

Note: For the purpose of this specification, a rounded indication may be either circular or elliptical with the longer axis less than three times as long as the smaller axis and with no sharp corners.

B. The surface shall be free of rounded indications in excess of the limits specified in the table below. The number of indications specified in this table represents the maximum number allowable in any six square inches of surface with the major dimension of this area not to exceed six inches. The six square inch area shall be taken in the most unfavorable location relative to the indications being evaluated.

(IX. Continued)

Cladding, Weld or Material Thickness	Max. Size of Rounded Indications Assorted, Randomly Distributed	No. of Rounded Indications Allowed Per Six Sq. In.
To .25	1/32	5
.25 to .50	3/64	5
.50 to 1.0	1/16	8
1 to 2	3/32	8
2 to 4	1/8	8
over 4	1/8	10

C. 1. For tube to tube sheet welds, all surfaces, including areas of fuse-through on inside surfaces shall be free of any indications revealed by dye penetrant inspection.

2. For pressurizer heater welds, all surfaces shall be free of any indications revealed by dye penetrant inspection.

3. For examination of dissimilar metal safe-end weld joint and/or nozzle end weld deposited build-ups, the inspected surfaces shall be free of any indications revealed by dye penetrant inspection.

4. In the conduct of the examination of forging or casting material, linear indications are acceptable on the following basis in respect to material thickness:

"t"	Rounded	Maximum Major Dimension of linear consideration
up to 5/8"	1/8"	1/16"
5/8" to 2"	3/16"	1/8"
2" and up	3/16"	3/16"

Cluster count is limited to 10 indications in any six (6) square inches of surface with the area taken in the most unfavorable location but the major dimension is not to exceed 6": random size not to exceed limits above

D. For single pass seal welds, except tube to tube sheet and pressurizer heater welds, above, all indications shall be considered defects and evaluated to the acceptance standard below.

1. Surfaces shall be free of all linear indications as noted in "A" above, and all rounded indications of maximum diameter 1/64 inch or greater.

2. Surfaces shall be free of rounded defects of maximum dimensions less than 1/64 inch, unless they are randomly distributed, there are five or fewer such defects per six square inch area, and no defect is separated from any other by 1/4 inch or less.

F.W.Dury
Changed
3/25/71 2

E. Only such defects need be removed as to render the surface acceptable to the requirement of this specification. Areas containing unacceptable defects shall be ground to remove the necessary defects. The areas shall then be re-inspected to insure that those defects have been completely eliminated. Minor cavities, resulting from the removal of small discontinuities, that do not reduce the wall or cladding thickness below drawing requirements, or that do not affect machined or gasket fits, need not be repair welded, but shall be blended into the surrounding area. Other defects shall be repair welded by means of the original or other approved repair welding process. Completed repairs shall be dye penetrant inspected for final acceptance.

Part I

Procedure for water wash removal of dye penetrant.

A. Pre-inspection
B. Pre-cleaning
C. Application of dye penetrant
D. Application of remover
E. Removal of emulsified film
F. Surface drying
G. Application of developer
H. Examination and evaluation
I. Final cleaning
J. Certification of inspection

A. Pre-Inspection: Prior to dye penetrant inspection, the surface shall be examined to determine its compliance to Paragraph VIII and a dimensional examination including, but not necessarily limited to, machined sizes, fillet sizes, wall thickness and cladding thickness shall be made. All unacceptable conditions must be corrected prior to dye penetrant inspection.

Temperatures (Paragraph VII), lighting and equipment (Paragraph V) and materials (Paragraph VI) shall be checked for compliance to this specification.

B. Pre-Cleaning: The materials or parts to be examined shall be suitably cleaned to remove all foreign matter which could interfere with the dye penetrant test. Oil and grease shall be removed using petroleum distillate (spirits) and/or alcohol. The use of alcohol shall always follow the use of petroleum distillate. The cleaning shall extend one inch (1") beyond the area of interest.

C. Application of Dye Penetrant: The surface shall be thoroughly dry (allow at least five minutes after wiping with alcohol) before application of the dye penetrant. The dye penetrant may be applied by spraying, brushing or immersion. The area to be inspected shall be completely covered and kept wet for a minimum of 15 minutes. If necessary, during this period, additional dye penetrant may be added. Precautions should be taken to prevent inspection materials from entering areas whose location precludes adequate cleaning. For sufficiently large surface areas, testing performance will

(C. Continued)

be in suitable increment sections to permit adherence to time intervals of this process specification. A suggested maximum area of approximately fifty (50) square feet is offered for guidance.

D. Application of Remover: It is permissible to remove excess dye penetrant prior to application of the remover by wiping with lint-free materials. The remover shall be applied by spraying or immersion. Brushing is prohibited.

E. Removal of Emulsified Film: After an emulsification time not to exceed three minutes, the emulsified penetrant film shall normally be removed by a water spray, nozzle, Spray Engineering Company No. 020FH1-60, No. 1817, or other suitable alternate. The water pressure shall not exceed 50 psi and the water temperature shall be in the range of 60 - 110°F. The spray shall be applied at a distance of 10 to 15 inches from the surface. Washing must be contined until all traces of surface dye penetrant have disappeared. Where restricted areas prevent the use of a water spray, other than the lack of facilities, the emulsified film may be removed by repeated application of dry or water soaked lint-free materials.

F. Surface Drying: Drying shall be accomplished by blotting with absorbent paper or clean lint-free cloths or by circulating warm air provided that the temperature of the surface is not raised above 125°F. Surface drying time shall not exceed 10 minutes.

G. Application of Developer: The developer shall be applied by dipping or spraying, with spraying preferred, until the surface is completely covered. It is suggested that the aerosol can or sprayer be held about 10 inches from the work and the developer be applied in short dusting strokes. The application of excessive developer should be avoided, since it is possible for a thick coating of developer to mask indications. Conversely, a developer coating too thin in application prevents adequate background contrast from being achieved.

Prior to applying the liquid developer, the suspension must be thoroughly agitated to insure uniform dispersion of the particles.

H. Examination and Evaluation: Visual examination shall be made of the surface being inspected after developer has dried for a minimum of 7 minutes and a maximum of 30 minutes. Indications will appear as red areas on a background of white. Evaluation and acceptance shall be made in accordance with Paragraph IX.

I. Final Cleaning: When the inspection is concluded, the dye penetrant materials shall be completely removed by brushing or wiping or washing with water or spirits.

J. Certification of Inspection: A certification of inspection completion shall be made immediately upon final acceptance.

F.W.Dury	
Changed	
2	3/25/7

F.W.Dury

Changed
3/25/71 2

Part II

Procedure for dry removal of dye penetrant.

A. Pre-inspection
B. Pre-cleaning
C. Application of dye penetrant
D. Removal of excess dye penetrant
E. Surfaces drying
F. Application of developer
G. Examination and evaluation
H. Final cleaning
I. Certification of Inspection

A. Pre-Inspection: Same as Part I "A".

B. Pre-Cleaning: Same as Part I "B".

C. Application of Dye Penetrant: Same as Part I "C".

D. Removal of Excess Dye Penetrant: Excess dye penetrant shall be removed from all surfaces as follows:

1. The surface shall be thoroughly wiped with lint-free materials.

2. All remaining excess dye penetrant shall be removed by wiping the surfaces with remover dampened lint-free materials.

Note: Flushing of the test surface with any liquid following application of the dye penetrant and prior to developing is prohibited.

E. Surface Drying: Same as Part I "F".

F. Application of Developer: Same as Part I "G".

G. Examination and Evaluation: Same as Part I "H".

H. Final Cleaning: Same as Part I "I".

I. Certification of Inspection: Same as Part I "J".

Part III

Procedure for tube to tube sheet inspection with tube sheet in vertical position.

A. Pre-inspection
B. Pre-cleaning
C. Application of dye penetrant.
D. Application of remover
E. Removal of emulsified film
F. Surface drying
G. Application of developer
H. Examination and evaluation
I. Final cleaning
J. Record of inspection

F.W. Dury

Changed
2 3/25/71

A. Pre-Inspection: Prior to dye penetrant inspection, the surface shall be examined to determine its compliance to Paragraph VIII. In addition the examination shall determine that the ends of the tubes are cut off within drawing tolerance, that all rough edges have been cleaned up and that all tube to tube sheet welds are fused smoothly and uniformly into the plate surfaces. All unacceptable conditions must be corrected prior to dye penetrant inspection.

Temperatures (Paragraph VII), lighting and equipment (Paragraph V) and materials (Paragraph VI) shall be checked for compliance to this specification.

The tube bundle shall be inclined at a minimum 5° angle with the tube ends up to facilitate the application of dye penetrant. Since only a portion of the tube sheet will be inspected at one time, the areas to be inspected later shall be protected.

B. Pre-Cleaning: Same as Part I "B".

C. Application of Dye Penetrant: The surface shall be thoroughly dry (allow at least 5 minutes after wiping with alcohol) before application of the dye penetrant. The dye penetrant shall be applied by spraying and brushing to no more than 600 tube ends at one time. The spray can should be held at about 45° so the dye does not go too far into the tubes; however, the dye must be sprayed so as to cover the sheet surface, the tube and tube well O.D. and the tube I.D. for a depth of 1/8 inch beyond the root of the weld. The surface being tested shall be kept wet for a minimum of 15 minutes. If necessary during this period, additional dye penetrant may be applied.

Following the dye penetrant dwell time the tube bundle shall be inclined at a minimum 5° angle with the tube ends down.

D. Application of Remover: The remover shall be applied only by use of an aerosol can, held with the orifice at a distance of 10 to 15 inches from the tube sheet. The remover shall be applied until all visible dye has been emulsified.

E. Removal of Emulsified Film: After an emulsification time not to exceed three (3) minutes (or one minute per 200 tube ends) the emulsified penetrant film shall be removed by using water rinse spray equipment, nozzle, Spray Engineering Company No. 020FHI-60, No. 1817, or other suitable alternate, and vacuum equipment. The water pressure shall not exceed 50 psi and the water temperature shall be in the range of $60^{\circ}F$ - $110^{\circ}F$. Washing shall continue for a 10 minute maximum period during which time all trace of dye penetrant shall have been removed from inside the tubes for 1-1/2 inches and from the surface of the tube sheet. Care shall be exercised to prevent over washing any areas. Clean lint-free materials shall be used to blot any remaining water or diluted dye.

F. Surface Drying: The tubes and tube sheet shall be dried with a vacuum hose placed against the ends of the tube in order to catch any droplets on the outer edge of the tubes.

F.W. Dury

Changed

/25/71 2

(F. Continued)

The vacuum shall be sufficient to pull water easily from the tubes. Low pressure compressed air is prohibited as a means of drying.

Drying may be facilitated by circulating warm air provided that the temperature of the surface is not raised above 125°F.

The tube bundle shall be inclined at a minimum 5° angle with the tube ends up to prevent any water remaining in the tubes from running to the outside during the developing period. A flashlight shall be used to detect droplets of water still remaining immediately on the inside of the tubes. Any droplets so found shall be blotted dry.

G. Application of Developer: Same as Part I "G".

H. Examination and Evaluation: Same as Part I "H".

I. Final Cleaning: When the inspection is concluded, the dye penetrant materials shall be completely removed by brushing or wiping or washing with water or spirits. Tubes shall be cleaned in the normal manner.

J. Record of Inspection: A record of inspection results shall be made immediately upon completion of each inspection.

Part IV

Procedure for tube sheet inspection with tube sheet face in horizontal position.

A. Pre-inspection
B. Pre-cleaning
C. Application of dye penetrant
D. Application of remover
E. Removal of emulsified film
F. Surface drying
G. Application of developer
H. Examination and evaluation
I. Final cleaning
J. Record of inspection

A. Pre-Inspection: Same as Part II "A" except asbestor or some similar material should be used to section off area being tested and tube bundle will not tilted.

B. Pre-Cleaning: Same as Part I "B".

C. Application of Dye Penetrant: Same as Part III "C".

D. Application of Remover: Same as Part III "D".

E. Removal of Emulsified Film: Same as Part III "E" except that upon completion

E. Continued)

of the wash period the diluted dye shall be removed from the tube sheet and tube weld surfaces with a vacuum hose placed against the ends of the tube or on the tube sheet surface. The vacuum shall be sufficient to pull the diluted dye from the tubes and sheet surfaces. Clean lint-free materials shall be used to blot any remaining water or diluted dye.

F. Surface Drying: Same as Part III "F" except tube bundle position will remain the same.

G. Application of Developer: Same as Part I "G"; except upon completion of developer application, pressurize secondary side 5 to 10 psi gage.

H. Examination and Evaluation: Same as Part I "H".

I. Final Cleaning: Same as Part III "I".

J. Record of Inspection: Same as Part III "J".

F.W. Dury

Changed

2 3/25/71

Issue 1
7/6/71

F. Dury
Changed
/20/71 2

H. Examination and Evaluation

The bond line evaluation for penetrant inspection of explosive cladding (cladding material-base metal interface) shall be performed immediately after the developer dries.

Acceptance shall be based on a maximum appearance of a clearly defined saw-tooth bleed-out. Any immediate appearance of a large bleed area in excess of 3/16" shall be cause for rejection. Repair removal shall continue until the acceptable rounded indication pattern is obtained.

Process Specification

NUCLEAR POWER COMPONENTS
ULTRASONIC INSPECTION OF WELD DEPOSITED CLADDING

.Galyen
Changed
1/25/70 2
8/13/71 3

PURPOSE: This specification covers the ultrasonic inspection of materials for use on nuclear power components. This covers the inspection of weld-deposited cladding.

PROCESS QUALIFICATION: This Process Specification meets the requirements of Boiler and Pressure Vessel A. S. M. E. Code, Section III, Nuclear Vessels and RDT Standards.

GENERAL: Use of this Process Specification will be indicated by:

Drawings, with symbols in accordance with AWS A 2.2-69.
A typical symbol is:

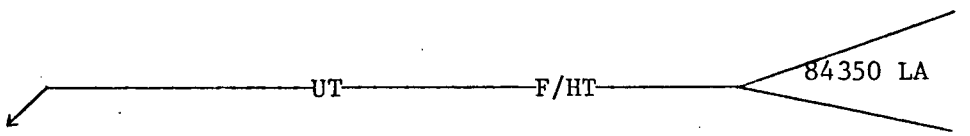

QUALIFICATION OF PERSONNEL: Personnel performing tests under this Process shall be qualified in accordance with SNT-TC-1A.

EQUIPMENT: The ultrasonic instrument shall be of the pulsed reflection type and shall be capable of carrying out all provisions of this Specification.

The nominal test frequency shall be 2.25 megacycles with a transducer of one square inch in area. Immersion or contact transducers may be used. Smaller size transducers and other frequencies may be used to explore or better define the size or location of flaws.

OPERATIONS:
1. Surface Preparation
2. Reference Standard
3. Test Procedure
4. Acceptance Standards
5. Recording test results

1. SURFACE PREPARATION:

A. Surface finish: All surfaces to be tested shall be flat and have a 250 microinch finish or better.

NOTE: A "flat" surface is considered sufficiently level or smooth when it provides good transducer contact. The surface shall be cleaned of paint or dirt prior to using the liquid couplants.

B. Ultrasonic couplants: A suitable liquid couplant such as clean S. A. E. 30 oil shall be used to couple the search units to the surface. Solid couplants such as greases, "Seal peel", putty, etc., shall not be used.

R.H.Anderson 6/17/71
W.M.Byerley 6/20/69
F.X. Brown 7/3/69
W. English 7/69
W.H.Richardson 6/30/69

Process Specification

NUCLEAR POWER COMPONENTS
ULTRASONIC INSPECTION OF WELD DEPOSITED CLADDING

Issue 1
7/9/69

Changed	
2	11/25/79
3	8/13/7

2. REFERENCE STANDARD:

A reference specimen shall be used to calibrate the equipment. The reference specimen shall have the same nominal clad thickness and the same P-number grouping as the clad material being tested. It shall contain 3/4", 1/2" and 1/4" flat bottom holes and shall be formed by machining from the base metal side to the clad/base-metal interface.

The reference specimens shall be prepared by using essentially the same cladding procedure as used for the test component.

The equipment shall be calibrated by adjusting to obtain optimum resolution of the 3/4" hole in the calibration standard to 75% of screen to represent the unbonded condition.

STANDARD REFERENCE BLOCKS

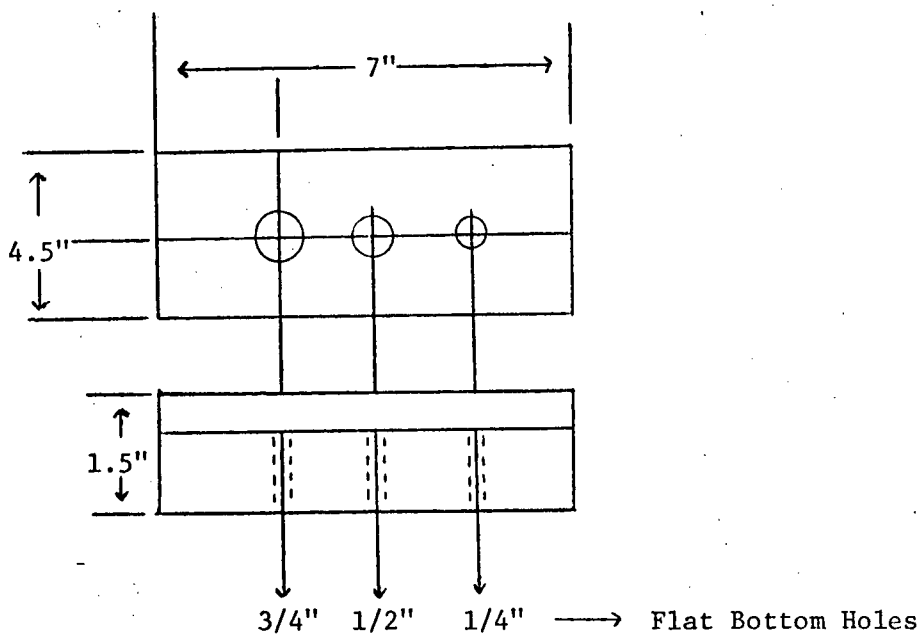

3. TEST PROCEDURE:

A. Surface marking: On large parts, such as tube plates, the surface may be marked off into quadrants or sections prior to testing. The markings are to be used as a guide to insure complete coverage while scanning. Marking may be made with a grease pencil.

B. The clad surface shall be inspected from the clad side of the material transverse to the direction of welding.

C. Scanning: Each pass across a surface shall overlap by the previous pass so as to insure complete coverage by at least 20%.

4. ACCEPTANCE STANDARD:

The areas listed below shall be rejected. The rejected area may be removed and repaired by the original or other approved weld deposited cladding procedure.

Westinghouse Electric Corporation
Tampa Division Nuclear Energy Systems
Tampa, Florida, U. S. A.

Issue 1
7/9/69
C. Galyen
Changed
11/25/70 2
3/13/71 3

A. Any defective area in excess of the area of the crystal.

B. Any defective area that produces an amplitude exceeding 50% of the calibrated reference specimen shall be recorded for information only.

C. Any defective area within 4 inches of any joint weld.

5. RECORDING TEST RESULTS:

For each ultrasonic test, fill out in detail form SP-3534-A "Westinghouse Ultrasonic Test Record".

Headquarters:
P.O. Box 175
Buchanan, New York
10511

Engineering Office:
P. O. Box 809
Philadelphia, Pennsylvania
19105

Liaison Office:
P.O. Box 355
Pittsburgh, Pennsylvania
15230

WEDCO
Corporation

Mr. M. L. Snow
Manager - Reliability Department

From: P. A. Wolfe
Date: July 28, 1970
Subject:

I have this date verified that the Unit 2 Steam Generators are properly Code Stamped with the letter N, in accordance with Section III Class A of the ASME Code.

Steam Generator	National Board No.
#24 — 16A5780-1	732
#22 — 16A5780-2	734
#21 — 16A5780-3	736
#23 — 16A5780-4	738

P A Wolfe

P. A. Wolfe
Systems Reliability

PAW/jt

cc: T. A. Lawson

MANUFACTURER'S REPORT OF WELDED REPAIRS OR ALTERATIONS

☒ Lumbermens Mutual Casualty Co. ☐ American Motorists Insurance Co.

1 REPAIRED BY (*Name and address of Manufacturer or Repair Concern*)
Westinghouse Electric Corporation, Tampa Div., Tampa, Fla.

2 REPAIRED FOR (*Name and plant address of owner*)
Consolidated Edison (IPP #2) Buchanan, N.Y.

3 OBJECT AND TYPE (*Boiler, pressure vessel, F. T., W. T., jacketed, etc.*)
Nuclear Steam Generator

4 IDENTIFICATION NUMBER (*Owner's, State, other*)
National Board #736

YEAR BUILT 1970

5 DESCRIPTION OF REPAIR (*Use separate sheets or sketch if necessary*)
Removed explosive clad plate center lane, under partition plate and replaced with weld overlay (NPT-11). Restored partition plate to overlay weld (NPT-12) First row of U tubes, rows A1 and B1 plugged with drive plugs with clad overlay as the seal. Performed tube weld repair (NPT-14). (See attached.)

6 REPAIRS MADE IN ACCORDANCE WITH
☒ Owner's Instructions ☒ Nat'l Board Rules ☒ Repair Concern's Plans

7 REPAIR PLANS APPROVED BY (*Name of Owner representative*) Carl W. Brown
DATE OF APPROVAL 7-26-71

8 WELDING PROCEDURE QUALIFICATION AND WELDER QUALIFICATION IN ACCORDANCE WITH ASME CODE
☒ YES ☐ NO

PROCEDURE DESIGNATION	DATE OF QUALIFICATION	TEST RESULTS AVAILABLE
NPT-11, NPT-12, NPT-14	6/14/71 - 6/29/71 - 8/3/71	☒ YES ☐ NO

WELDER'S NAME	DATE LAST QUALIFIED	WELDER'S NAME	DATE LAST QUALIFIED
See attached list			
WELDER'S NAME	DATE LAST QUALIFIED	WELDER'S NAME	DATE LAST QUALIFIED

9 REPAIRS COMPLETED (*Date*) October 10, 1971

~~HYDROSTATIC~~ TEST (*Pressure*) Pressure test-secondary side 800 psi nominal

We certify the above statements to be correct and that the repairs when completed satisfactorily withstood the ~~hydrostatic~~ pressure test without evidence of leakage or other signs of distress.

Date 10/10 19 71 Signed Westinghouse Electric (*Manufacturer or Repair Concern*) By Albert L. Arnold (*Representative*)

CERTIFICATE OF WELDED REPAIR INSPECTION

I, the undersigned, holding a valid commission issued by the National Board of Boiler and Pressure Vessel Inspectors and/or the State of New York have inspected during repair the object described above and state that to the best of my knowledge and belief the statements made and certified to above by the representative of Westinghouse Electric (*Manufacturer or Repair Concern*) are correct.

By signing this certificate neither the Inspector nor his employer makes any warranty, expressed or implied, concerning the object described in this report. Furthermore neither the Inspector nor his employer shall be liable in any manner for any personal injury or property damage or a loss of any kind arising from or connected with this inspection, except such liability as may be provided in a policy of insurance which Lumbermens Mutual Casualty Company may issue upon said object and then only in accordance with the terms of said policy.

Date Dec 3 1971 Signed [illegible] (*Inspector*) Commissions [illegible] (*State or Nat'l Board No.*)

5. Description of Repair (continued)

Repair Key - (W) = Tube Weld (P) = Tube Plug

Row B2 - Outlet side repair
Reading from left to right

Column

1 - (W)
2 - (P)
3 - (W)
4 - (W)

Row A2 - Inlet side repair

2 - (P)
29 - (W)
33 - (W)
34 - (W)
35 - (W)
36 - (W)
37 - (W)
38 - (W)
39 - (W)
40 - (W)
41 - (W)
42 - (W)
43 - (W)
44 - (W)
45 - (W)
46 - (W)

MANUFACTURER'S REPORT OF WELDED REPAIRS OR ALTERATIONS

☒ Lumbermens Mutual Casualty Co. ☐ American Motorists Insurance Co.

1 REPAIRED BY *(Name and address of Manufacturer or Repair Concern)*
Westinghouse Electric Corporation, Tampa Div., Tampa, Fla.

2 REPAIRED FOR *(Name and plant address of owner)*
Consolidated Edison (IPP #2) Buchanan, N. Y.

3 OBJECT AND TYPE *(Boiler, pressure vessel, F. T., W. T., jacketed, etc.)*
Nuclear steam generator

4 IDENTIFICATION NUMBER *(Owner's, State, other)*
National Board #734

YEAR BUILT
1970

5 DESCRIPTION OF REPAIR *(Use separate sheet or sketch if necessary)*
Removed explosive clad plate center lane, under partition plate and replaced with weld overlay (NPT-11). Restored partition plate to overlay weld (NPT-12). First row of U tubes, rows A1 and B1 plugged with drive plugs with clad overlay as the seal. Performed tube weld repair ([redacted] & NPT-14). (See attached.)

6 REPAIRS MADE IN ACCORDANCE WITH
☒ Owner's Instructions ☒ Nat'l Board Rules ☒ Repair Concern's Plans

7 REPAIR PLANS APPROVED BY *(Name of Owner representative)*
Harold D. Brown

DATE OF APPROVAL
7-26-71

8 WELDING PROCEDURE QUALIFICATION AND WELDER QUALIFICATION IN ACCORDANCE WITH ASME CODE
☒ YES ☐ NO

PROCEDURE DESIGNATION
NPT-11, NPT-12, [redacted] & NPT-14

DATE OF QUALIFICATION
6/16/71 - 6/29/71 - 8/3/71

TEST RESULTS AVAILABLE
☒ YES ☐ NO

WELDER'S NAME	DATE LAST QUALIFIED	WELDER'S NAME	DATE LAST QUALIFIED
(See attached list)			
WELDER'S NAME	DATE LAST QUALIFIED	WELDER'S NAME	DATE LAST QUALIFIED

9 REPAIRS COMPLETED *(Date)*
October 10, 1971

[redacted] TEST *(Pressure)*
Pressure test-secondary side 800 psi nominal

We certify the above statements to be correct and that the repairs when completed satisfactorily withstood the ~~hydrostatic~~ pressure test without evidence of leakage or other signs of distress.

Date 10/10 19 71 Signed Westinghouse Electric *(Manufacturer or Repair Concern)* By Albert L. Russell *(Representative)*

CERTIFICATE OF WELDED REPAIR INSPECTION

I, the undersigned, holding a valid commission issued by the National Board of Boiler and Pressure Vessel Inspectors and/or the State of New York have inspected during repair the object described above and state that to the best of my knowledge and belief the statements made and certified to above by the representative of Westinghouse Electric *(Manufacturer or Repair Concern)* are correct.

By signing this certificate neither the Inspector nor his employer makes any warranty, expressed or implied, concerning the object described in this report. Furthermore neither the Inspector nor his employer shall be liable in any manner for any personal injury or property damage or a loss of any kind arising from or connected with this inspection, except such liability as may be provided in a policy of insurance which Lumbermans Mutual Casualty Company may issue upon said object and then only in accordance with the terms of said policy.

Date Dec 3 19 71 Signed [illegible] *(Inspector)* Commissions [illegible] *(State or Nat'l Board No.)*

ZRK 68 10-70 2M PRINTED IN U.S.A.

5. Description of repair (Continued)

Repair Key - (W) = Tube Weld (P) = Tube Plug

Row A2 Inlet Side Repair

Reading from left to right

1 - (P)	28 - (W)	47 - (W)	80 - (W)
2 - (W)	29 - (W)	48 - (W)	81 - (W)
3 - (W)	30 - (W)	49 - (W)	82 - (W)
4 - (W)	31 - (W)	50 - (W)	84 - (W)
5 - (W)	32 - (W)	51 - (W)	85 - (W)
7 - (P)	33 - (W)	52 - (W)	86 - (W)
8 - (W)	34 - (W)	53 - (W)	87 - (W)
9 - (W)	35 - (W)	54 - (W)	88 - (W)
10 - (W)	36 - (W)	56 - (W)	89 - (W)
12 - (W)	39 - (W)	57 - (W)	91 - (W)
14 - (W)	40 - (W)	61 - (W)	92 - (W)
15 - (W)	41 - (W)	65 - (W)	
16 - (W)	42 - (W)	67 - (W)	
17 - (P)	43 - (W)	75 - (P)	
26 - (W)	44 - (W)	77 - (W)	
27 - (W)	45 - (W)	78 - (W)	
	46 - (W)	79 - (W)	

Row B2 - Outlet Side Repair

1 - (P)	20 - (W)	39 - (W)	81 - (W)
4 - (W)	21 - (W)	60 - (W)	84 - (W)
5 - (W)	23 - (W)	65 - (W)	85 - (W)
7 - (P)	24 - (W)	71 - (W)	86 - (W)
11 - (W)	31 - (W)	72 - (W)	88 - (W)
12 - (W)	32 - (W)	73 - (W)	89 - (W)
13 - (W)	33 - (W)	74 - (W)	90 - (W)
14 - (W)	34 - (W)	75 - (P)	91 - (W)
15 - (W)	35 - (W)	76 - (W)	92 - (W)
16 - (W)	36 - (W)	77 - (W)	
17 - (P)	37 - (W)	78 - (W)	
18 - (W)	38 - (W)	80 - (W)	
19 - (W)			

MANUFACTURER'S REPORT OF WELDED REPAIRS OR ALTERATIONS

☒ Lumbermens Mutual Casualty Co. ☐ American Motorists Insurance Co.

1 REPAIRED BY *(Name and address of Manufacturer or Repair Concern)*
Westinghouse Electric Corporation, Tampa Div., Tampa, Fla.

2 REPAIRED FOR *(Name and plant address of owner)*
Consolidated Edison (IPP #2) Buchanan, N.Y.

3 OBJECT AND TYPE *(Boiler, pressure vessel, F. T., W. T., jacketed, etc.)*
Nuclear Steam Generator

4 IDENTIFICATION NUMBER *(Owner's, State, other)*
National Board #738

YEAR BUILT
1970

5 DESCRIPTION OF REPAIR *(Use separate sheet or sketch if necessary)*
Removed explosive clad plate center lane, under partition plate and replaced with weld overlay (NPT-11). Restored partition plate to overlay weld (NPT-12). First row of U tubes, rows A1 and B1 plugged with drive plugs with clad overlay as the seal. Performed tube weld repair ([redacted] & NPT-14). (See attached.)

6 REPAIRS MADE IN ACCORDANCE WITH
☒ Owner's Instructions ☒ Nat'l Board Rules ☒ Repair Concern's Plans

7 REPAIR PLANS APPROVED BY *(Name of Owner representative)*
Eugene Brown

DATE OF APPROVAL
7-26-71

8 WELDING PROCEDURE QUALIFICATION AND WELDER QUALIFICATION IN ACCORDANCE WITH ASME CODE
☒ YES ☐ NO

PROCEDURE DESIGNATION	DATE OF QUALIFICATION	TEST RESULTS AVAILABLE
NPT-11, NPT-12, [redacted] & NPT-14	6/16/71 - 6/29/71 - 8/3/71	☒ YES ☐ NO

WELDER'S NAME	DATE LAST QUALIFIED	WELDER'S NAME	DATE LAST QUALIFIED
See attached list			
WELDER'S NAME	DATE LAST QUALIFIED	WELDER'S NAME	DATE LAST QUALIFIED

9 REPAIRS COMPLETED *(Date)*
October 10, 1971

~~HYDROSTATIC~~ TEST *(Pressure)* Pressure test-secondary side 800 psi nominal

We certify the above statements to be correct and that the repairs when completed satisfactorily withstood the ~~hydrostatic~~ pressure test without evidence of leakage or other signs of distress.

Date 10/10 19 71 Signed Westinghouse Electric *(Manufacturer or Repair Concern)* By Albert L. Ronald *(Representative)*

CERTIFICATE OF WELDED REPAIR INSPECTION

I, the undersigned, holding a valid commission issued by the National Board of Boiler and Pressure Vessel Inspectors and/or the State of New York have inspected during repair the object described above and state that to the best of my knowledge and belief the statements made and certified to above by the representative of Westinghouse Electric *(Manufacturer or Repair Concern)* are correct.

By signing this certificate neither the Inspector nor his employer makes any warranty, expressed or implied, concerning the object described in this report. Furthermore neither the Inspector nor his employer shall be liable in any manner for any personal injury or property damage or a loss of any kind arising from or connected with this inspection, except such liability as may be provided in a policy of insurance which Lumbermans Mutual Casualty Company may issue upon said object and then only in accordance with the terms of said policy.

Date Dec 3 19 71 Signed [illegible] *(Inspector)* Commissions [illegible] *(State or Nat'l Board No.)*

ZRK 68 10-70 2M PRINTED IN U.S.A.

5. Description of Repair (Continued)

Repair Key - (W) = Tube Weld (P) = Tube Plug

Row B2 - Outlet Side Repair

Reading from left to right

1 - (P)	40 - (W)
31 - (W)	41 - (W)
32 - (W)	42 - (W)
33 - (W)	43 - (W)
34 - (W)	44 - (P)
35 - (W)	50 - (W)
36 - (W)	51 - (W)
37 - (W)	61 - (W)
38 - (W)	73 - (W)
39 - (W)	79 - (W)

Row A2 Inlet Side Repair

1 - (P)	42 - (W)
2 - (W)	44 - (P)
3 - (W)	45 - (W)
4 - (W)	50 - (W)
12 - (W)	55 - (W)
34 - (W)	56 - (W)
37 - (W)	57 - (P)
	83 - (W)

1

MANUFACTURER'S REPORT OF WELDED REPAIRS OR ALTERATIONS

☒ Lumbermens Mutual Casualty Co. ☐ American Motorists Insurance Co.

1 REPAIRED BY (Name and address of Manufacturer or Repair Concern)
Westinghouse Electric Corporation, Tampa Div., Tampa, Fla.

2 REPAIRED FOR (Name and plant address of owner)
Consolidated Edison (IPP #2) Buchanan, N. Y.

3 OBJECT AND TYPE (Boiler, pressure vessel, F. T., W. T., jacketed, etc.)
Nuclear Steam Generator

4 IDENTIFICATION NUMBER (Owner's, State, other)
National Board #732

YEAR BUILT
1970

5 DESCRIPTION OF REPAIR (Use separate sheet or sketch if necessary)
Remove explosive clad plate center lane, under partition plate and replace with weld overlay (NPT-11). Restored partition plate to overlay weld (NPT-12). First row of U tubes, rows A1 and B1 plugged with drive plugs with clad overlay as the seal. Performed tube weld repair ([redacted] & NPT-14). (See attached).

6 REPAIRS MADE IN ACCORDANCE WITH
☒ Owner's Instructions ☒ Nat'l Board Rules ☒ Repair Concern's Plans

7 REPAIR PLANS APPROVED BY (Name of Owner representative)
[illegible]

DATE OF APPROVAL
7-26-71

8 WELDING PROCEDURE QUALIFICATION AND WELDER QUALIFICATION IN ACCORDANCE WITH ASME CODE
☒ YES ☐ NO

PROCEDURE DESIGNATION
NPT-11, NPT-12, [redacted], NPT-14

DATE OF QUALIFICATION
6/16/71 - 6/29/71 - 8/3/71

TEST RESULTS AVAILABLE
☒ YES ☐ NO

WELDER'S NAME	DATE LAST QUALIFIED	WELDER'S NAME	DATE LAST QUALIFIED
See attached list			
WELDER'S NAME	DATE LAST QUALIFIED	WELDER'S NAME	DATE LAST QUALIFIED

9 REPAIRS COMPLETED (Date)
October 10, 1971

[redacted] TEST (Pressure) Pressure test-secondary side 800 psi nominal

We certify the above statements to be correct and that the repairs when completed satisfactorily withstood the ~~hydrostatic~~ pressure test without evidence of leakage or other signs of distress.

Date 10-10 1971 Signed Westinghouse Electric (Manufacturer or Repair Concern) By Albert L. Brandell (Representative)

CERTIFICATE OF WELDED REPAIR INSPECTION

I, the undersigned, holding a valid commission issued by the National Board of Boiler and Pressure Vessel Inspectors and/or the State of New York have inspected during repair the object described above and state that to the best of my knowledge and belief the statements made and certified to above by the representative of Westinghouse Electric (Manufacturer or Repair Concern) are correct.

By signing this certificate neither the Inspector nor his employer makes any warranty, expressed or implied, concerning the object described in this report. Furthermore neither the Inspector nor his employer shall be liable in any manner for any personal injury or property damage or a loss of any kind arising from or connected with this inspection, except such liability as may be provided in a policy of insurance which Lumbermens Mutual Casualty Company may issue upon said object and then only in accordance with the terms of said policy.

Date Dec 3 1971 Signed [illegible] (Inspector) Commissions [illegible] (State or Nat'l Board No.)

ZRK 68 10-70 2M

PRINTED IN U.S.A.

5. Description of Repair (Continued)

Repair Key - (W) = Tube Weld (P) = Tube Plug

Row B2 - Outlet Side Repair

Reading from right to left.

Column	
89-(W)	46-(W)
82-(W)	45-(W)
80-(W)	44-(W)
79-(W)	43-(W)
78-(W)	42-(W)
77-(W)	41-(W)
76-(W)	40-(W)
75-(W)	39-(W)
74-(W)	38-(W)
70-(W)	37-(W)
69-(W)	36-(W)
66-(W)	32-(W)
63-(W)	31-(W)
62-(W)	30-(W)
61-(W)	29-(W)
59-(P)	27-(W)
58-(P)	26-(W)
57-(P)	25-(W)
56-(P)	24-(W)
55-(P)	23-(W)
54-(P)	22-(W)
53-(P)	21-(W)
52-(P)	20-(W)
51-(P)	19-(W)
50-(W)	12-(W)
49-(W)	11-(W)
48-(W)	5-(W)
47-(P)	3-(W)

Row A-2 - Inlet Side Repair

92-(W)	80-(W)
91-(W)	79-(W)
90-(W)	78-(W)
89-(W)	76-(W)
81-(W)	75-(W)

Row A-2 - Inlet Side Repair (Continued)

70-(W)	41-(W)
60-(W)	40-(W)
59-(P)	39-(W)
58-(P)	38-(W)
57-(P)	37-(W)
56-(P)	36-(W)
55-(P)	35-(W)
54-(P)	34-(W)
53-(P)	33-(W)
52-(P)	32-(W)
51-(P)	31-(W)
48-(W)	30-(W)
47-(W)	29-(W)
46-(W)	28-(W)
45-(P)	27-(W)
44-(W)	26-(W)
43-(W)	15-(W)
42-(W)	14-(W)
	13-(W)

10-G

PROP

C. F.

ONLY

NOTICE

THE ATTACHED DOCUMENT MAY CONTAIN "PROPRIETARY INFORMATION" OR MATERIAL OF A PRIVACY NATURE, AND SHOULD BE HANDLED AS NRC "OFFICIAL USE ONLY" INFORMATION. IT SHOULD NOT BE DISCUSSED OR MADE AVAILABLE TO ANY PERSON NOT REQUIRING SUCH INFORMATION IN THE CONDUCT OF OFFICAL BUSINESS AND SHOULD BE STORED IN A MANNER WHICH WILL ASSURE THAT ITS CONTENTS ARE NOT MADE AVAILABLE TO UNAUTHORIZED PERSONS.