CONSOLIDATED EDISON COMPANY OF NEW YORK

INDIAN POINT UNIT NO. 2

DRILL SCENARIO NO. 1988

10-14-88

8812190241 881014
PDR ADOCK 05000247
R PDC

CONSOLIDATED EDISON COMPANY OF NEW YORK

INDIAN POINT UNIT NO. 2

DRILL SCENARIO NO. 1988

TABLE OF CONTENTS

Section	
I.	Introduction
II.	Objectives
III.	Drill Scenario
IV.	Messages & Controller Field Reports
V.	Observer/Controller Instructions
VI.	Plant Status Log
VII.	Radiological/Meteorological Log
VIII.	Radiological Information
IX.	Logistics

10-14-88

CONSOLIDATED EDISON COMPANY OF NEW YORK

INDIAN POINT UNIT NO. 2

DRILL SCENARIO NO. 1988

I. INTRODUCTION

The purpose of this drill is to demonstrate Con Edison's capability to effectively implement the Indian Point Unit No. 2 Site Emergency Plan and Procedures.

This document has been prepared to assist the drill Observer/Controllers in the conduct and evaluation of the drill. It contains all the information and data necessary to properly conduct the drill in an efficient and coordinated manner and is broken down as follows:

Section II Objectives - this section defines the drill objectives.

Section III Drill Scenario - this section describes the Indian Point Unit No. 2 postulated sequence of events occurring which will require the onsite emergency response organizations to respond. For each event described, the anticipated results of the participants are also detailed. These results should be used as a guide in evaluating the drill. However, it should be noted that the results observed may vary from those stated and should be evaluated on a case-by-case basis with respect to applicable procedures.

Section IV Messages - this section contains copies of the drill messages and Controller Field Reports which will be utilized to control the progress of the drill scenario.

Section V Observer/Controller Instructions - this section provides general instructions to the drill Observers and Controllers in the conduct of the drill. Also included is evaluation criteria for evaluating the responses of the drill participants.

Section VI Plant Status Log - this section contains time-related information (non-radiological) concerning plant conditions, which corresponds to the development of the drill scenario.

Section VII Radiological/Meteorological Log - this section contains time-related plant radiological and meteorological data which corresponds to the development of the drill scenario.

Section VIII Radiological Information - this section contains time-related radiological information in the following categories as required by the scenario:

- Primary Coolant Activity
- Containment Activity
- Release Path Activity
- Plant Radiation Levels
- Facility Radiation Levels
- Reuter-Stokes Readings
- Plume Monitoring Data & Figures
- Offsite TLD Readings
- Post Accident Samples
- Post Accident Offsite Contamination Levels
- Medical Emergency Data

Section IX Logistics - this section contains information and direction for the handling of peripheral items related to the day of the drill.

- Food for participants
- Access lists
- Methods of identification of players, controllers, observers, visitors, etc.

CONSOLIDATED EDISON COMPANY OF NEW YORK

INDIAN POINT UNIT NO. 2

DRILL SCENARIO NO. 1988

II. OBJECTIVES

Our objectives are to demonstrate the licensee's;

1. capability to classify emergencies thru the four (4) classifications utilizing the new EAL tables (No alert notification system capability will be demonstrated.)

2. initial notification to offsite authorities within 15 minutes of the declaration of each of the four emergency classifications.

3. ability to activate the emergency organization as delineated in section 5 of the Emergency Plan. This includes completing Staffing Level II within 60 minutes.

4. ability to activate the EOF, CCR, TSC, OSC, CRC & ECC.

5. licensee communications capability to State and local authorities and the NRC, and between offsite monitoring teams and licensee facilities.

6. ability to transmit data from the TSC to the EOF.

7. deployment of offsite and onsite radiological monitoring teams.

8. deployment of inplant radiological monitoring teams.

9. ability to receive and assess radiological data.

10. completion of assembly and accountability of site personnel within 30 minutes. (No evacuation of site personnel will be demonstrated.) A representative number of assembled personnel will be relocated from one area to the Buchanan Service Area.

11. command and control at the emergency response facilities.

12. changeover of responsibility for the direction and control of the emergency force from the Senior Watch Supervisor to the Plant Operations Manager and then to the Emergency Director.

13. ability of facility staff to perform their job function in an efficient manner.

14. site access control and security measures to ensure there are no delays to the passage of EOF emergency personnel to the EOF.

15. ability to calculate dose projection, determine recommended protective actions and transmit the information in a timely manner to offsite authorities.

16. personnel radiological exposure control capabilities for emergency personnel.

17. the recovery phase including declassification of emergency, activation of the recovery center by the Recovery Manager, damage assessment and post accident environment monitoring which includes sample pickup, identification and vehicle check out of contamination.

18. ability of the facility managers to plan for a shift change.

CONSOLIDATED EDISON COMPANY OF NEW YORK

INDIAN POINT UNIT NO. 2

DRILL SCENARIO NO. 1988

III. DRILL SCENARIO

Initial Conditions

The Indian Point Nuclear Power Station Unit No. 2 is at 100% power. The 13.8 kV 20 MVA transformer is out of service due to a blown transformer pot head. Maintenance and I&C are working to repair. Protection includes 52 GTBT and breaker GT2. A routine RCS sample indicates that the RCS activity is higher than normal but below Tech Spec limits.

The staff has been monitoring a Reactor Coolant leak into containment from an unknown source. The leak rate is below Technical Specification limits. What is unknown to the operators is that this leak is on the discharge of 21 Reactor Coolant Pump and will be the cause of the subsequent LOCA.

Narrative Summary

A small single engine airplane crashes into the Unit No. 1 Screenwell House on the dock side causing a fire. The pilot is dead.

The Senior Watch Supervisor declares a NOTIFICATION OF UNUSUAL EVENT DUE TO "aircraft crash onsite".

There is an interruption of service on 138 kV Feeder No. 95332 into the station not associated with the plane crash but due to an offsite fault. Efforts to restore power will not be successful either from 95332 nor from Unit No. 3 feeder 95331 because breaker BT 4-5 will not close due to a control problem.

Subsequently, Reactor Coolant Pump No. 21 develops high vibration, trips due to a locked-rotor and in turn trips the unit. As a result, fuel cladding failure has occurred. Subsequent to the locked rotor of the Reactor Coolant Pump, there is a step jump increase in the leakage rate as well as an increase in the atmospheric activity in the containment.

The SWS declares an ALERT due to "Fuel Clad Breach" as indicated by the RCS sample activity exceeding 28 uCi/cc Xe-133.

Developments which follow this indicate that a large-break LOCA has occurred. The indications to the operator are:

- low pressurizer pressure reactor trip
- safety injection signal
- high containment pressure
- high containment sump level and humidity
- containment isolation signal

The Plant Operations Manager or Emergency Director, as appropriate, declares a SITE AREA EMERGENCY due to RCS leakage > 100 gpm which constitutes a "breach of the second barrier".

The operator implements the Emergency Operating Procedures and subsequently, when the RWST reaches the level where transfer to the recirculation mode is required, recirculation pumps Nos. 21 and 22 are started. Normal recirculation takes place for a short period of time until the failure of one of the recirculation pumps. The other pump continues to operate normally. However, during this time, there is a slow buildup of hydrogen in containment along with slowly increasing core temperatures and radiation levels in containment. Attempts to light off the Hydrogen Recombiners will be delayed due to the delay in delivery of a supply of oxygen. The second recirculation pump will fail. The operator's attempt to align recirculation through the RHR system will be unsuccessful due to the inoperability of valve MOV 885-A (RHR suction from the containment sump) to open from the Control Room. The SWS must then dispatch an NPO to open the valve locally. The time lapse to perform these operations is sufficient to partially uncover the reactor core and cause severe core degradation.

Later the control room operator is notified by the NPO in the PAB of a muffled sound from containment. Containment purge exhaust valves are damaged and appear to be partially open as the station vent radiation monitors indicate high activity levels. The Emergency Director declares a GENERAL EMERGENCY due to "breach of the third barrier".

Eventually, efforts to close containment purge valve FCV-1173 (outside containment) are successful. The operator continues in the long term cooling mode to cold shutdown.

A two (2) day time warp will occur in which the reactor core will be considered in a safe cooled down condition and no potential releases of radioactive material to the environment. The ED will close out the emergency and declare a recovery stage.

The Recovery Center will be activated by the Recovery Manager who will evaluate plant status and map out a recovery plan. This will take approximately one hour at which time the exercise will end.

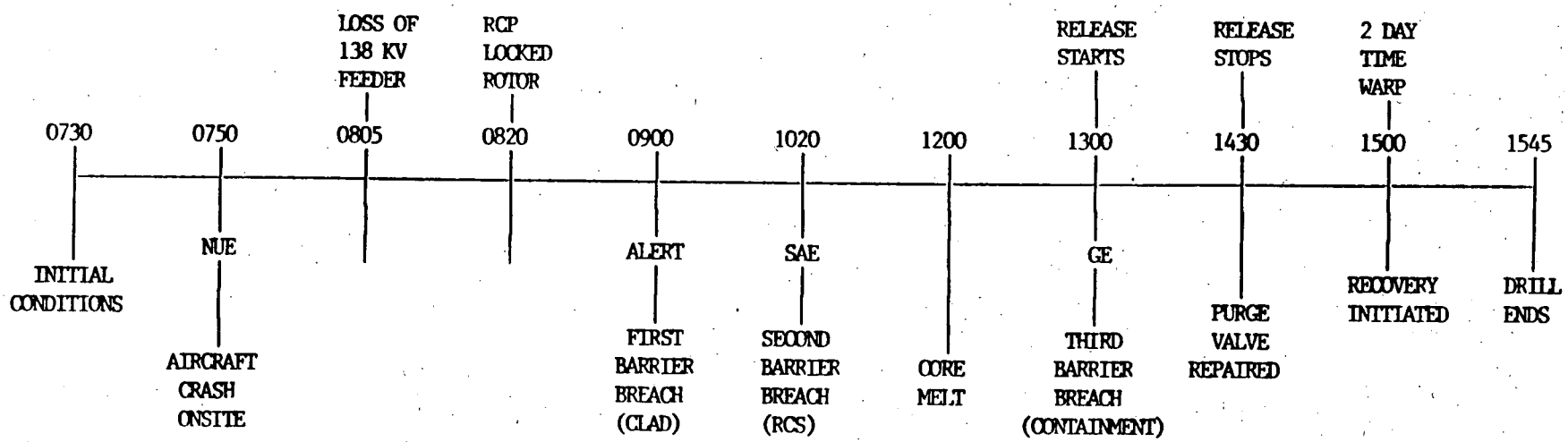

TIME LINE SCHEMATIC

DETAILED SCENARIO TIME LINE

TIME	INITIATING MESSAGE NUMBER	EVENT SUMMARY
T = 07:30	1	Initial Conditions established.
		ANTICIPATED RESULTS
		The SWS discusses the initial conditions with the Watch Personnel.
T = 07:40	2	The Security Supervisor reports that a small single engine airplane has crashed into the Unit No. 1 Screenwell House on the dock side. A fire was caused by the crash. The pilot appears to be dead.
		ANTICIPATED RESULTS
		Control Room Operator (CRO)
		- Sounds the fire emergency signal and announces a fire at the Unit No. 1 Screenwell House.
		Fire Brigade
		- Responds to fire under the direction of the Support Facility Supervisor.
T = 07:50 Approx.	3	- Plane has knocked a hole in the wall of the screenwell house on the river side. - The pilot has been thrown clear and is dead. - The fire brigade has put out the fire. - No other personnel are injured.
		ANTICIPATED RESULTS
		Senior Watch Supervisor (SWS)
		- Evaluates conditions and declares an NUE because of "aircraft crash onsite".

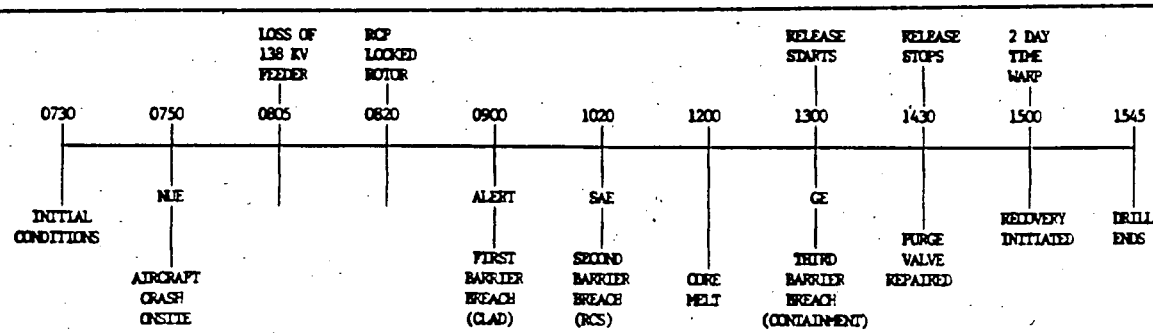

DETAILED SCENARIO TIME LINE

TIME	INITIATING MESSAGE NUMBER	EVENT SUMMARY
		Senior Watch Supervisor (Continued) - Fills out "Radiological Emergency Data Form, PART I". - Directs the "Communicator" to make the appropriate notifications in accordance with IP-1002.
T = 08:05	4	An interruption of service on 138 kV Feeder No. 95332 into the station has occurred. Indications to the operator are: - 6900V Station Auxiliary Breaker Trip 52 ST5 and 52 ST6. - 480V Swg. Motor Trip. - Emergency Diesel Generator Nos. 21, 22 and 23 start. ANTICIPATED RESULTS Control Room Operator (CRO) - Attempt to bring in 138 KV power from Feeder 95331 by closing breaker BT 4-5.
T = 08:10 Approx.	5	Breaker BT 4-5 will not close.
T = 08:15	6	Systems Operations informs the Senior Watch Supervisor that 138 kV Feeder No. 95332 will not be available for four to eight hours because of problem at the Buchanan Sub-Station.
T = 08:20	7	Reactor Coolant Pump No. 21 develops a locked rotor. The reactor trips on low loop flow. Indications to the operator are as follows:

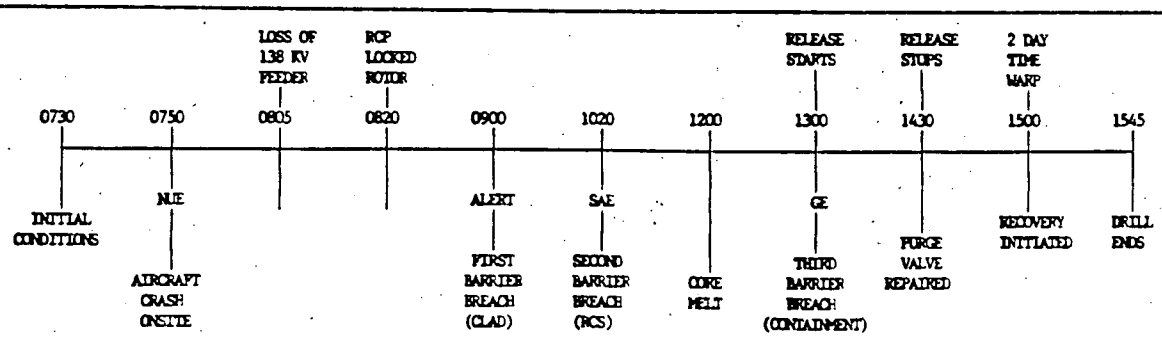

DETAILED SCENARIO TIME LINE

TIME	INITIATING MESSAGE NUMBER	EVENT SUMMARY
		- Reactor Coolant Pump No. 21 Trip - Reactor Trip - Loss of Flow Single Loop - Reactor Coolant Pump #21 phase over current relay activation - Reactor Coolant Low Flow Channel Trip - Reactor Coolant Pump No. 21 High Vibration - Steam Line Delta-PSI - Step increase in charging flow
		ANTICIPATED RESULTS
		- Loss of remaining Reactor Coolant Pumps.
		Control Room Operator (CRO)
		- Enters Procedure E-0 "Reactor Trip or Safety Injection". - Verify proper operation of Diesel Generators. - 480 volt busses energized from DGs.
T = 08:21 Approx.	8	A safety injection (SI) signal is received based on SG steam pressure differential. 480 volt busses are energized from DGs.
T = 08:25 Approx.		Aux Feedwater flow is reduced based on decreasing Tavg. Transition from E-0, to ES-1.1, SI Termination, based on meeting the SI Termination criteria.
		ANTICIPATED RESULTS
		Shift Technical Advisor (STA)
		- Start monitoring Status Trees based on transition to ES-1.1.

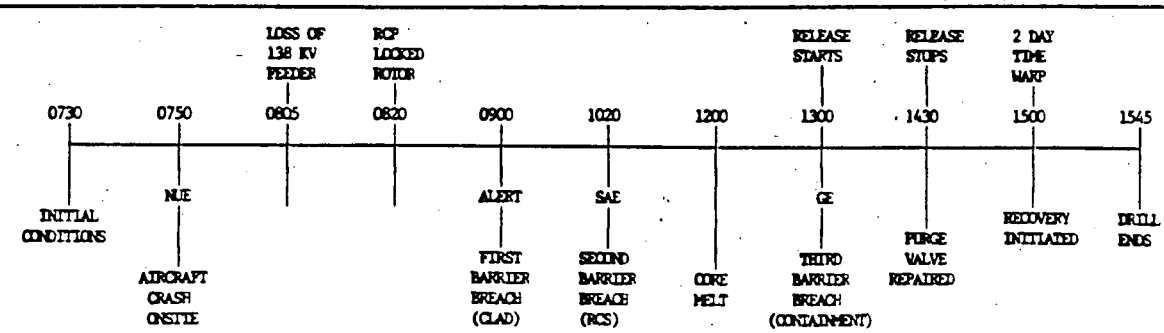

DETAILED SCENARIO TIME LINE

TIME	INITIATING MESSAGE NUMBER	EVENT SUMMARY
T = 08:25 Approx.	A	Controller Field Report on BT 4-5 problems.
T = 08:50	9	RCS sample Xe-133 concentration 30 uCi/cc.
		ANTICIPATED RESULTS
		Control Room Operator (CRO)
		- Review Abnormal Operating Instruction A-12.1, "High Activity - Reactor Coolant System" after ES-1.1, SI termination is completed. - Enter POP 3.2 "Plant Recovery From Reactor Trip".
T = 08:55	B	Controller Field Report on RCS Boron, pH and leak rate plus activity of all SGs.
T = 09:00 Approx.		**Senior Watch Supervisor (SWS)**
		- Declares an ALERT because RCS activity > 28 uCi/cc Xe-133 constitutes a CLAD BREACH. - Request another reactor coolant sample from the Watch Chemist. - Direct Control Room Operator to sound Site Emergency Assembly Alarm. - Fills out "Radiological Emergency Data Form PART I." - Direct the "Communicator" to make appropriate notifications in accordance with IP-1002.
		Plant Operations Manager (POM)
		- Report to the Control Room and discuss and review plant status, emergency action levels, initiating conditions and emergency classification with SWS.

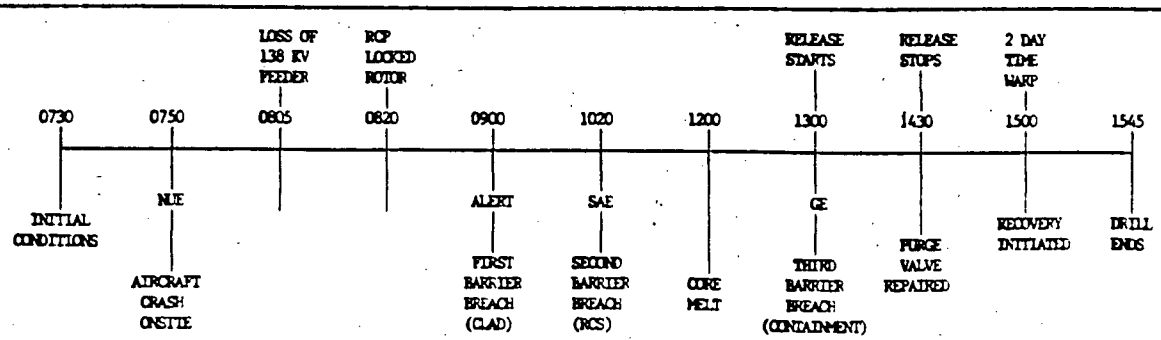

DETAILED SCENARIO TIME LINE

TIME	INITIATING MESSAGE NUMBER	EVENT SUMMARY

- At the SWS office discuss the situation with the assembled personnel and appoint individuals to the following positions;

  - o TSC Manager
  - o OSC Manager
  - o Offsite Rad Assm't Dir (ORAD)
  - o Tech Advisor (TA) to EOF
  - o I & C Coordinator
  - o Maint Coordinator
  - o Rad Prot Coordinator

Person Who Will Assume Position of ED

- May stay at control room with POM or report to the EOF.

Offsite Rad Assm't Dir (ORAD)

- Contact individuals to fill EOF positions.
- Report to the EOF.

TSC Manager

- Activate TSC.
- Provide technical support to the SWS and POM including:

  - o Methods for restoration of off-site power.
  - o Evaluate Plant Data.

OSC Manager

- Activate OSC.
- Start site accountability.
- Insure that staffing of OSC team members is accomplished.

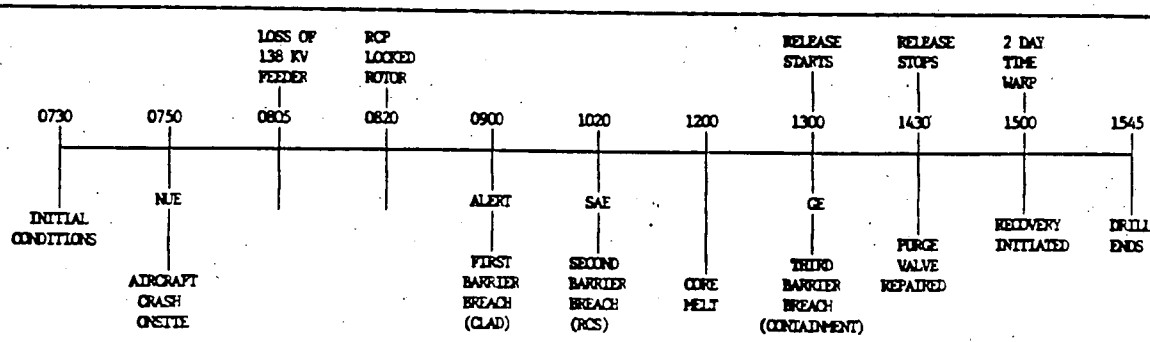

DETAILED SCENARIO TIME LINE

TIME	INITIATING MESSAGE NUMBER	EVENT SUMMARY
T = 10:20	10	LOCA occurs. Indications to the operator are: - Przr Low Pressure Channel Trip - Przr Low Pressure SI Channel Trip - Decreasing Przr Level - High Containment Press SI Channel Trip - Decreasing VCT Level - High Containment Sump Level - Containment Isolation - ARM R-2 and R-7 ALARM - ARM R-11 and R-12 ALARM - High Containment Pressure ALARM - High-High Containment Pressure ALARM - Major increase in charging flow ANTICIPATED RESULTS Control Room Operator (CRO) - Manual SI because Przr level and sub-cooling are rapidly approaching zero. - Enter E-0, Reactor Trip or Safety Injection.
T = 10:21 Approx.	11	Provided to the CRO only if E-0 is not properly entered.
T = 10:25 Approx.		Emergency Director (ED) - Discuss and review plant status, emergency actions levels, initiating conditions and emergency classification. - Declares a SITE AREA EMERGENCY due to "RCS leakage > 100 gpm" which constitutes a breach of the second barrier. - Fills out "Radiological Emergency Data Form, PART I (FORM 30a)".

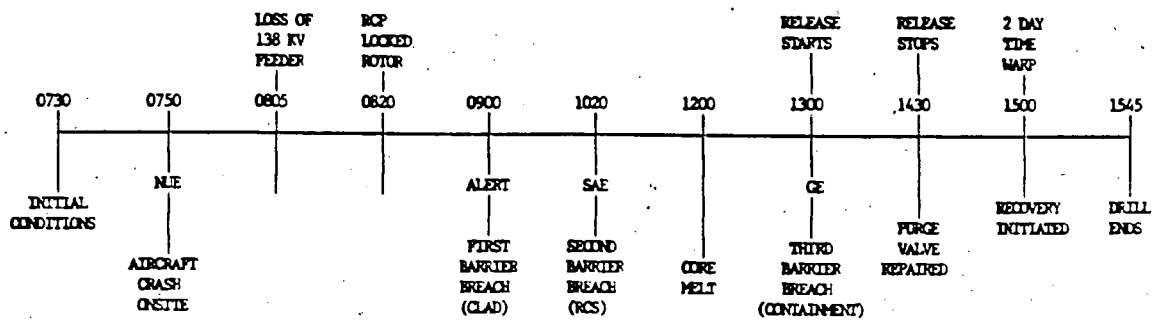

DETAILED SCENARIO TIME LINE

TIME	INITIATING MESSAGE NUMBER	EVENT SUMMARY
		- Direct the "Communicator" to make appropriate notifications in accordance with IP-1002. - Give appropriate instructions to Security Supervisor. - Direct in-plant radiological monitoring. Initiate onsite survey. - Direct ORAD to initiate a site perimeter survey. - Discusses potential actions with POM and TSC Mgr. - Determine protective actions for offsite population. - Directs the OSC Mgr. to evacuate all non-essential personnel through the Command Guard House to their parked cars (Simulated Movement - All non-essential personnel will be told to go back to their normal assignments.
		<u>Offsite Radiological Assessment Director (ORAD)</u> - Evaluates containment activity and recommends offsite protective actions (PAs) to the ED. Realistic PAs would be sheltering in a 2 mile radius and 5 miles downwind. - Dispatch offsite team to survey and verify that there is no release. - Dispatch onsite team to survey the site boundary to verify there is no release. - Request MIDAS operator to obtain readout of Reuter-Stokes monitors.
T = 10:25		<u>TSC Manager</u> - Support Control Room and maintenance activities.

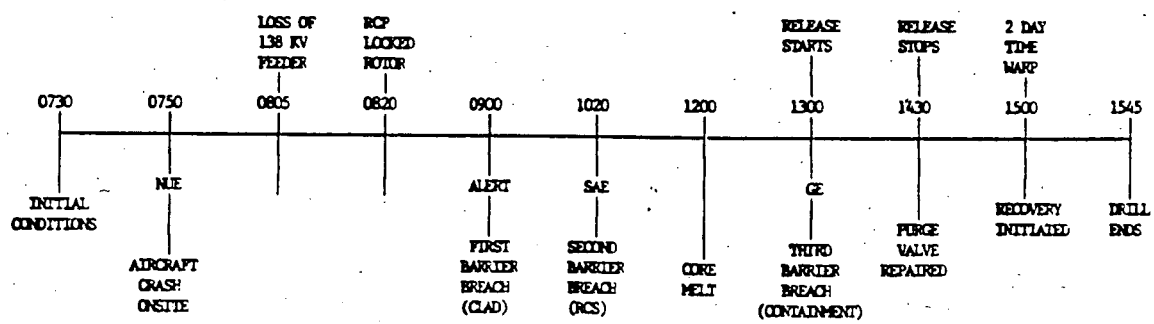

DETAILED SCENARIO TIME LINE

TIME	INITIATING MESSAGE NUMBER	EVENT SUMMARY
		- Initiate completion of TSC staffing if not already done.
		Survey Team Health Physicist (STHP)
		- Check equipment availability. - Perform field survey at EOF; including set up of TRITON in accordance with IP-1041, and set-up of SAM-2/RD-22 and RM-14/HP-210 Counter and Air Sampler in accordance with IP-1020. - Obtain two (2) Handi-Talkies from Security. - Assign TLD badges and dosimeters. - Set-up FRISKER and Step-Off Pad at upper and lower entrance of EOF. - Perform appropriate surveys approximately every 30 minutes. - Follow and maintain personnel exposure and contamination control for all personnel. - Confer with ORAD and dispatch onsite field survey teams and receive data. Place field survey readings on Site Map.
T = 10:25 Approx.		**Control Room Operator (CRO)**
		- Transition to E-1, Loss of Reactor or Secondary Coolant, from E-0 after determining that RCS was not intact. - Transition to FR-Z.1, Response To High Containment Pressure, based on ORANGE condition for Containment CSF Status Tree.
T = 10:30 Approx.		**Control Room Operator (CRO)**
		- Actions have been completed in FR-Z.1, Response To High Containment Pressure, so E-1, Loss of Reactor or Secondary Coolant, is resumed.

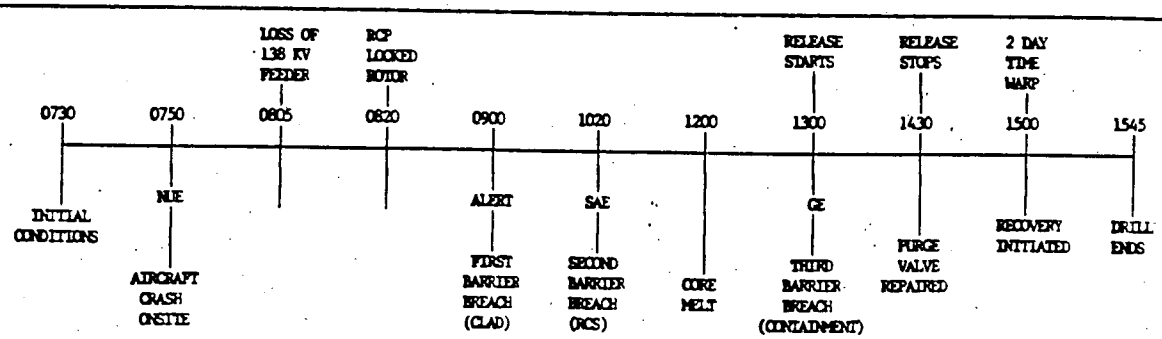

DETAILED SCENARIO TIME LINE

TIME	INITIATING MESSAGE NUMBER	EVENT SUMMARY
T = 10:30-10:44	12	Contingency message for use depending on whether the CRO is utilizing plant status data for T = 10:30 or 10:45.
T = 11:15	13	RWST Low Level Alarm sounds.
		ANTICIPATED RESULTS
		Control Room Operator (CRO)
		- Transitions to ES-1.3 based on E-1 Series foldout page requirement for less than 10.23 feet in RWST.
T = 11:20		Shift to cold leg recirculation.
		ANTICIPATED RESULTS
		Control Room Operator (CRO)
		- Operates recirculation switches as directed by ES-1.3.
T = 11:35	14	Recirculation Pump No. 21 fails.
		ANTICIPATED RESULTS
		Senior Watch Supervisor (SWS)
		- Dispatch NPO to investigate problem. - Ensure adequate flow available with Pump No. 22.
T = 11:40 Approx.	C	Controller Field Report - Hydrogen Recombiners.
T = 11:45 Approx.	D	Controller Field Report concerning Recirculation Pumps.
T = 11:55	15	Recirculation Pump No. 22 fails.

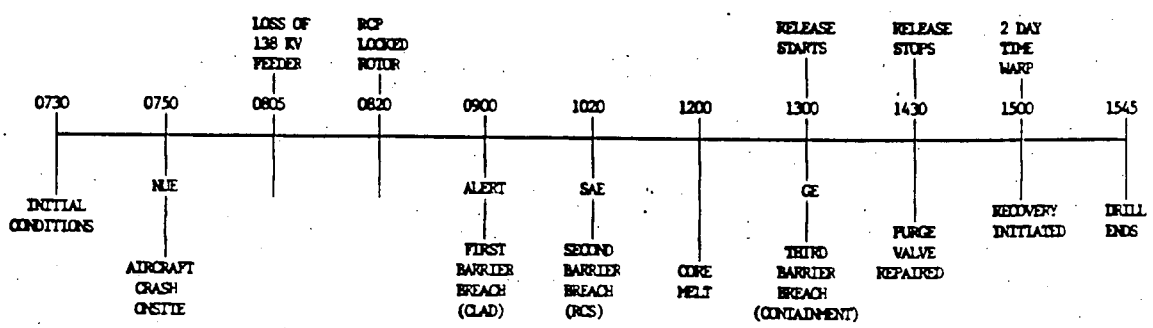

DETAILED SCENARIO TIME LINE

TIME	INITIATING MESSAGE NUMBER	EVENT SUMMARY
		ANTICIPATED RESULTS
		Control Room Operator (CRO)
		- Line up recirculation via the RHR system.
		Plant Operations Manager
		- Directs Maint and I&C Coordinators to investigate failure of Recirculation Pump No. 22. - Evaluate plant data.
T = 11:56	16	MOV-885A fails to open from the Control Room.
		ANTICIPATED RESULTS
		Senior Watch Supervisor (SWS)
		- Dispatch the NPO Rover to check the fuses. - Inform and confer with POM.
		TSC Manager
		- Support Control Room and maintenance activities.
		Control Room Operator (CRO)
		- CRO unable to line up RHR System for recirculation since MOV-885A failed to open. - Lines up SI System for Hi Head Recirculation.
T = 11:58	17	MOV-888A and MOV-888B fail to open.

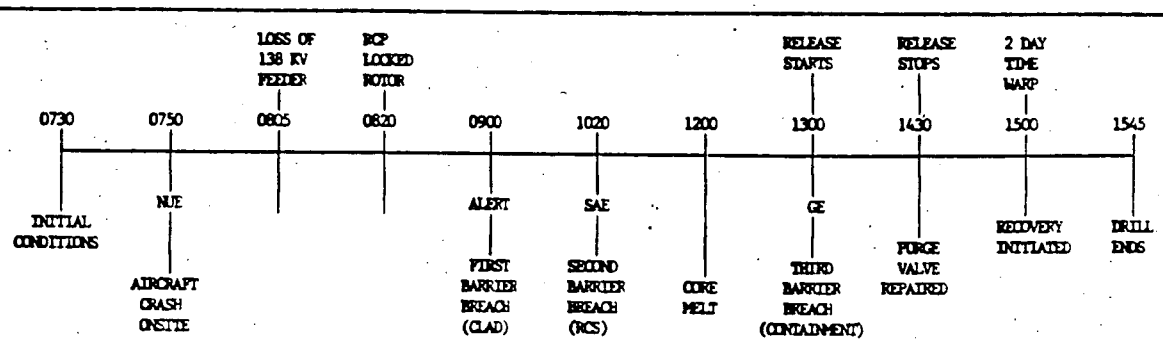

DETAILED SCENARIO TIME LINE

TIME	INITIATING MESSAGE NUMBER	EVENT SUMMARY
		ANTICIPATED RESULTS
		Senior Watch Supervisor (SWS)
		- Dispatch the NPO Rover to check the fuses.
		Shift Technical Advisor (STA)
		- Identify an ORANGE condition on the CORE COOLING CSF Status Tree. - Inform the SWS/CRO that procedure FR-C.2, Response To Degraded Core Cooling, must be entered.
		Control Room Operator (CRO)
		- Enter FR-C.2, based on report from STA.
T = 12:00 Approx.	D'	Controller Field Report on refilling PWST/RWST.
T = 12:05 Approx.		**Control Room Operator (CRO)**
		- Start charging pumps 22 & 23. - Depressurize all intact SGs to 170 PSIG.
T = 12:10 Approx.	18	Fuses associated with MOV-885A are good.
T = 12:10 Approx.	19	Fuses associated with MOV-888A&B are good.
		ANTICIPATED RESULTS
		Senior Watch Supervisor (SWS)
		- Dispatch NPO Rover to open valves MOV-888A&B manually. - Inform and confer with the Plant Operations Manager.

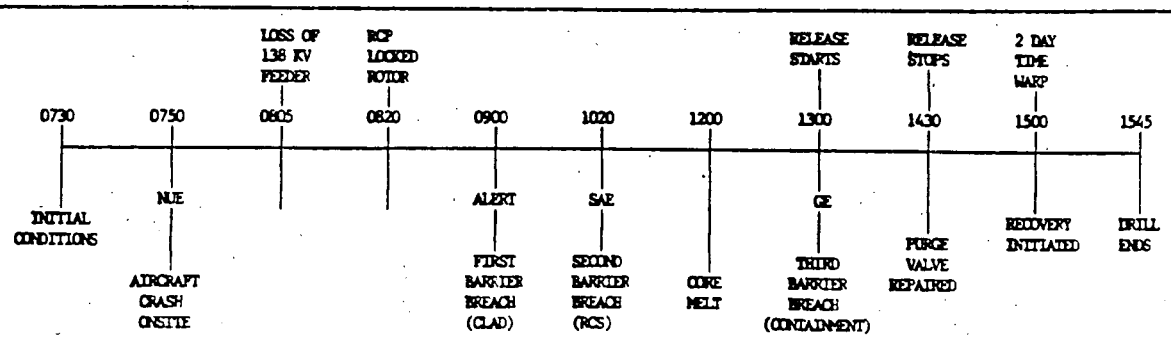

DETAILED SCENARIO TIME LINE

TIME	INITIATING MESSAGE NUMBER	EVENT SUMMARY
T - 12:15		**Shift Technical Advisor (STA)** - Identifies RED condition for CORE Cooling CSF Status Tree. - Informs SWS/CRO that FR-C.1, Response To Inadequate Core Cooling must be entered. **Control Room Operator (CRO)** - Enters FR-C.1.
T = 12:15 Approx.		**Plant Operations Manager (POM)** - Directs Maint, I&C and Rad Prot Coordinators to have MOV-885A valve manually opened. **Senior Watch Supervisor (SWS)** - Consults with Plant Operations Manager about additional recovery actions based on Hydrogen concentration in containment being greater than 4% in dry air.
T = 13:00	20	A "hydrogen burn" occurs inside Containment. Containment purge exhaust valves FCV-1172 and FCV-1173 have both lost CLOSED status indication light. ARM R-13 and R-14 ALARM. **ANTICIPATED RESULTS** **Control Room Operator (CRO)** - Attempt to reclose FCV-1172 & 1173 - Intact SG pressures are < 170 PSIG so depressurization is stopped based on FR-C.1.

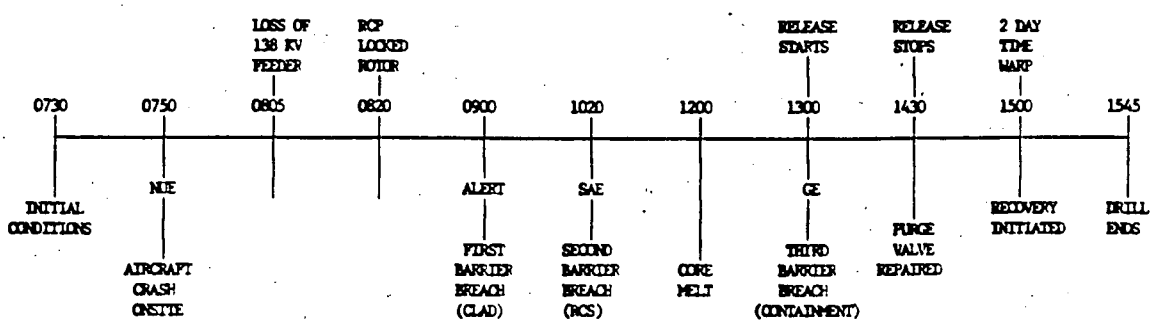

DETAILED SCENARIO TIME LINE

TIME	INITIATING MESSAGE NUMBER	EVENT SUMMARY
		- Depressurize SGs to atmospheric pressure based on FR-C1. - Close all SI accumulator isolation valves. - Transition to E-1, Loss of Reactor or Secondary Coolant, based on FR-C.1.
		Senior Watch Supervisor (SWS)
		- Inform and confer with POM concerning problem with containment purge exhaust valves.
T = 13:00 Approx.		**Emergency Director (ED)**
		- Declares a GENERAL EMERGENCY because of the loss of the third barrier. - Obtain latest prognosis from POM. - Discuss Protective Actions with the ORAD. - Evaluate future meteorological conditions for additional protective action recommendations. - Fills out "Radiological Emergency Data FORM, PART I (FORM 30a)". - Has the ORAD complete PART II (FORM 30b). - Directs the "Communicator" to notify offsite authorities.
		Dose Assessment Health Physicist (DAHP)
		- Receive, evaluate, and relate to ORAD offsite survey team data. - Calculate offsite exposures at the Site Boundary, 2 miles, 5 miles and 10 miles (IP-1007). Discuss results with ORAD. - Check recommended Protective Actions (IP-1013).

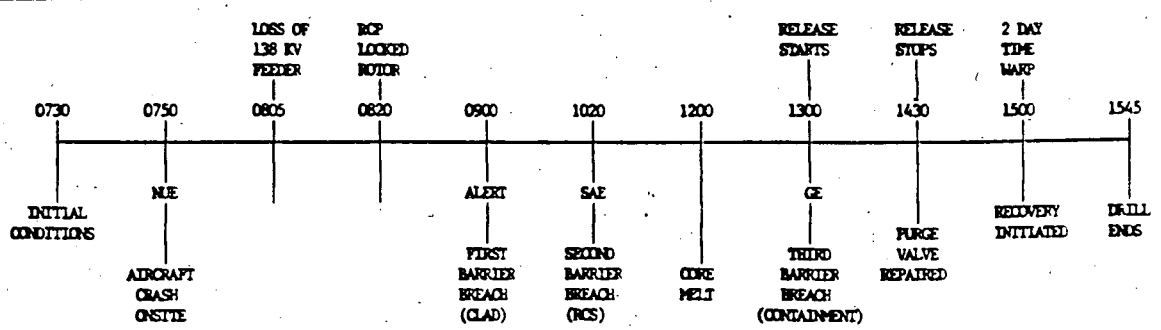

DETAILED SCENARIO TIME LINE

TIME	INITIATING MESSAGE NUMBER	EVENT SUMMARY
		- Obtain from MIDAS Operator the Reuter-Stokes SENTRI readings. Review and compare with predicted and/or measured offsite exposure rates. Recommend to ORAD redirecting monitoring teams to resolve any discrepancies. - Project future survey/sampling points.
		<u>TSC Manager</u> - Develop plans for closing FCV-1173. - Transmit plant data to EOF. - Support Control Room and maintenance activities.
T = 13:00 Approx.		<u>Plant Operations Manager (POM)</u> - Direct the OSC Coordinator to form a repair and corrective action team(s) (per IP-1011) to check the status of the purge exhaust valve.
		<u>Offsite Radiological Assessment Director (ORAD)</u> - Check information obtained from TSC. - Review new plant release and survey data and compare predicted offsite exposure rates with survey team measured and/or Reuter-Stokes field readings. - Perform necessary dose projections. Determine recommended Protective Actions using IP-1013. Review these with the ED. - Fill out "Radiological Emergency Data FORM, PART II (FORM 30b)" and confer with the Emergency Director.

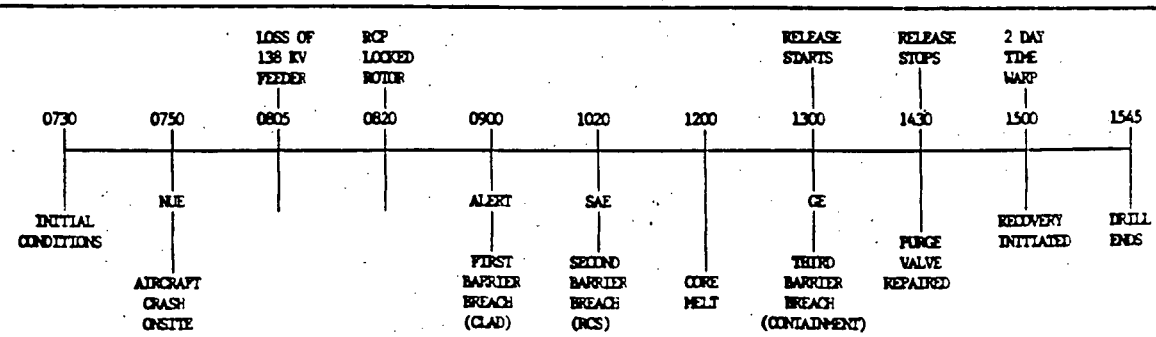

DETAILED SCENARIO TIME LINE

TIME	INITIATING MESSAGE NUMBER	EVENT SUMMARY
		Survey Team Health Physicist (STHP)
		- Continue to perform appropriate surveys approximately every 30 minutes; including EOF field survey, air sampling and counting inside EOF, etc. - Continue updating personnel exposure records and maintain exposure and contamination control for all personnel.
T = 13:15	E	Controller Field Report on FCV-1173
T = 13:30	21	MOV 885-A has been manually opened.
		ANTICIPATED RESULTS
		Control Room Operator (CRO)
		- Return to ES-1.3, Transfer To Cold Leg Recirculation and place RHR Pump No. 22 in recirculation. - Secure Containment Spray Pump No. 21 based on ES-1.3. - After ES-1.3 is completed return to FR-C.1.
T = 13:30	F	Controller Field Report - RHR Recirculation.
T = 14:00	22	Second shift emergency roster requested.
T = 14:15 Approx.		Control Room Operator (CRO)
		- Transition to ES-1.3, Transfer to Cold Leg Recirculation, based upon E-1. - Transition to FR-P.1, Response To Imminent Pressurized Thermal Shock Condition, based on an ORANGE condition on the Integrity CSF Status Tree.

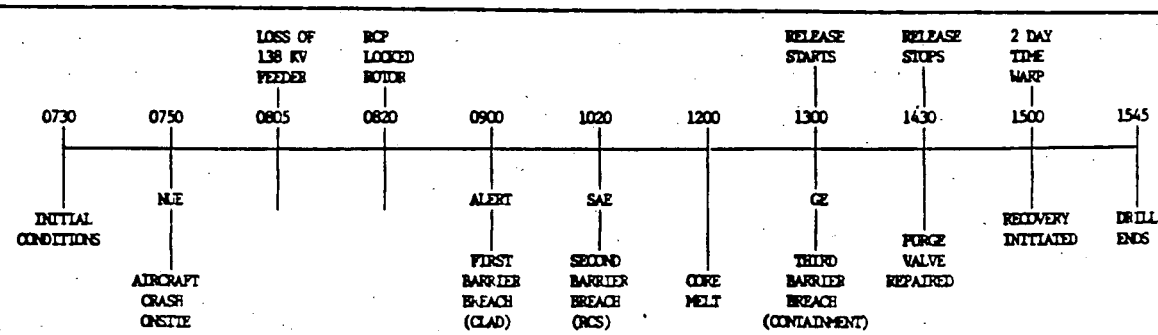

DETAILED SCENARIO TIME LINE

TIME	INITIATING MESSAGE NUMBER	EVENT SUMMARY
T = 14:15 Approx.	G	Controller Field Report - Cooldown
T = 14:20 Approx.		<u>Controller Room Operator (CRO)</u> - Should continue to depressurize SGs to atmospheric pressure based on FR-C.1, rather than to stop the depressurization based on FR-P.1.
T = 14:30	23	The maintenance team repairs and closes containment purge exhaust valve FCV-1173. The release from the plant is terminated.
T = 14:45 Approx.	H	Controller Field Report concerning FR-P.1.
T = 14:55	24	Suspending of drill for 5 minutes to allow for a 2 day time warp.
T = 15:00	25	Two (2) day time warp. Reactor in safe shutdown condition. Core cooling maintained and no radioactive releases to environment. Purge valve FCV-1173 has been repaired and is closed. <u>ANTICIPATED RESULTS</u> <u>Emergency Director (ED)</u> - Deescalates and goes to recovery stage. Recovery Manager is activated and convenes meeting at Recovery Center to evaluate plant status and map out recovery pattern.
T = 15:45	26	Drill Ends

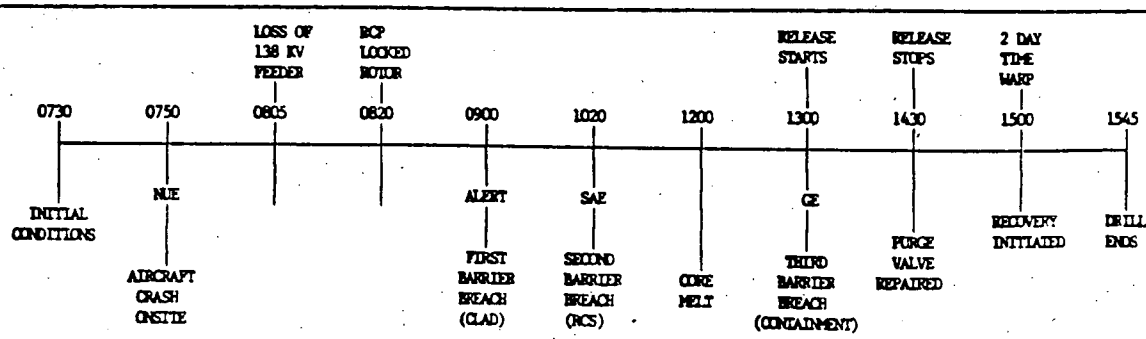

CONSOLIDATED EDISON COMPANY OF NEW YORK

INDIAN POINT UNIT NO. 2

EXERCISE SCENARIO NO. 1988

IV. MESSAGES

TO: ALL DRILL PARTICIPANTS

FROM: ALL LOCATIONS

TIME: WHEN PLAYERS REPORT TO FACILITY

MESSAGE: EXERCISE GROUND RULES

All participants are required to observe the following Ground Rules for the entire duration of the Exercise. If you have any questions, ask your Exercise Controller for clarification at this time.

1. Ensure that all communications indicate that this is only a exercise. Make a positive statement that this is a exercise-related message at the beginning and end of all messages or conversations. If communication lines are kept open for extended periods, periodically repeat the caution. This is especially critical when transmitting messages over communication facilities that are monitored by non-Consolidated Edison personnel.

2. Take no actions that affect unit or non-exercise related operations.

3. Take immediate action(s) to restore safe operation, if an unsafe condition exists. Ignore drill situation if actual safety becomes a concern.

4. Use only the information provided in accordance with the ground rules or derived from approved procedures. Do not improvise information.

   a. Controllers will provide appropriate information at the location where that information would normally be available (e.g., Reactor status at the Control Room, dose rate readings with field teams, meteorological information at Control Room or EOF).

   b. Only selected parameters and readings will be provided. The selected information will be sufficient to make decisions in accordance with Con Edison plans and procedures.

c. The intent of the scenario is to test the emergency plans and procedures of Con Edison and the offsite authorities. In certain instances the logic involved in selecting the details stretches the imagination. This was done to accommodate the onsite and offsite objectives of the drill. Do not become overly concerned when this occurs.

d. There will be a Con Edison Observer/Controller at each important location. Controllers will provide information and clarification on which actions are to be simulated or are outside the scope of this drill in order to keep the drill progressing in accordance with the scenario. Observer/Controllers will also observe all aspects of the drill to prepare an in-house evaluation of plans, procedures and training.

5. Be sure that the Con Edison Observer/Controller is aware of your actions (actual or simulated).

6. Make all procedurally required notifications unless directed not to by the Controller.

7. If samples inside or outside the site are deemed necessary, their collection will be performed and their analysis conducted unless simulation is directed by a Controller. Observer/Controllers will accompany the survey teams, both onsite and offsite.

8. This drill is conducted to evaluate our plans and procedures. The drill is also a training vehicle for members of the Con Ed Emergency Response Organization to practice working together and with outside organizations. Please make note of any improvements in any area that you observe as a participant and submit them to the Observer/Controller at the conclusion of the drill.

9. If, during any part of the drill, you are having trouble accomplishing your required duties, confusion arises, or clarification is necessary, ask your Controller. Controller assistance or clarification does not necessarily imply failure on your part. Your Controller will know the limitations of information he can provide you.

10. The Radiation Work Permit number for the emergency drill is 10001. This number will be used by all participants and observer/controllers entering the radiation area.

SIMULATION

CONTROL ROOM (CR)

1. KI use
2. Notification to police concerning dead pilot

TECHNICAL SUPPORT CENTER (TSC)

None

OPERATIONAL SUPPORT CENTER (OSC)

1. Anti-C and respirators for teams (one team outfitted only)
2. Sampling and Counting, including the PASS
3. Entry of repair teams into contaminated areas or areas requiring a site specific RWP
4. Fire brigade need not charge hose line(s)

EMERGENCY OPERATIONS FACILITY (EOF)

1. KI use
2. Disarming of Halon System
3. Switching ventilation to internal mode
4. Dispatch of TA to NYS EOC
5. Evacuation and movement of all non-essential personnel
6. Radiation survey of Recovery Center
7. Estimates of population dose after recovery
8. Buchanan Sub Station and Service Center personnel not participating
9. With the exception of the Security Guard for CCR, EOF and onsite team, all other security requests will be simulated.
10. The main gate and the command guard house will be secured for one hour after the assembly alarm is sounded. At other times it will be simulated.

ASTORIA ECC

1. Only one offsite team needs to be dispatched from Astoria. After the team is dispatched, the rest of the personnel may be released for normal duty.

CORPORATE RESPONSE CENTER (CRC)

1. CRC personnel are only required to contact appropriate directors, managers and chief engineers once after activating the facility stating, "This is a notification drill being performed in conjunction with an Indian Point Site Drill. Thank You."

CENTRAL INFORMATION GROUP (CIG)

1. The initiation of the Automated Telephone Emergency Notification Service (IP-1002 Section 4.4.1 C).

TO: SENIOR WATCH SUPERVISOR/CONTROL ROOM OPERATORS

LOCATION: CONTROL ROOM

TIME: T = 07:30

MESSAGE: NO. 1

This is a Drill

The Indian Point Nuclear Power Station Unit No. 2 is operating at 100% power. The 13.8 kV 20 MVA transformer is out of service due to a blown transformer pot head. Maintenance and I&C are working to repair. Protection includes 52 GTBT and breaker GT2. A routine RCS sample indicates that the RCS activity is higher than normal but below Tech Spec limits.

The routine RCS sample, taken 2 hours ago, indicated RCS activity higher then normal, see attached results. You have just requested a second sample to be evaluated.

The watch has been monitoring an RCS leak into containment from an unknown source. The leak rate is below Tech Spec limits.

This is a Drill

PRIMARY COOLANT ACTIVITY

Nuclide	NORMAL uCi/ml	05:30 hrs. uCi/ml
I-131	2.0×10^{-3}	4.2×10^{-2}
132	3.2×10^{-2}	3.2×10^{-1}
133	1.9×10^{-2}	2.3×10^{-1}
134	6.7×10^{-2}	5.3×10^{-1}
135	3.4×10^{-2}	3.5×10^{-1}
Xe-133	8.3×10^{-3}	6.1×10^{-1}
133m	< LLD	4.1×10^{-2}
135	2.5×10^{-2}	2.2×10^{-1}
135m	5.2×10^{-3}	7.2×10^{-2}
138	2.7×10^{-2}	1.0×10^{-1}
Kr-85	< LLD	< LLD
85m	< LLD	2.0×10^{-3}
87	< LLD	4.2×10^{-2}
88	< LLD	2.1×10^{-3}
Rb-88	1.6×10^{-2}	2.4×10^{-1}
89	1.9×10^{-2}	1.6×10^{-1}
Te-132	< LLD	1.5×10^{-3}
Cs-134	< LLD	1.6×10^{-3}
137	< LLD	1.7×10^{-3}
138	4.8×10^{-2}	4.6×10^{-1}
Ce-144	< LLD	2.2×10^{-2}
La-140	< LLD	2.2×10^{-3}
Ba-140	< LLD	1.3×10^{-2}
Total	3.0×10^{-1}	3.5×10^{0}
EBAR	2.19	1.83

TO: SENIOR WATCH SUPERVISOR

LOCATION: CONTROL ROOM

TIME: T = 07:40

MESSAGE: NO. 2

This is a Drill

The Shift Security Supervisor reports that a small single engine airplane has crashed into the Unit No. 1 Screenwell House on the dock side. The airplane is burning. The pilot is dead.

This is a Drill

TO: FIRE BRIGADE LEADER

LOCATION: SCENE OF THE FIRE

TIME: T = 07:50 APPROX.

MESSAGE: NO. 3

This is a Drill

The fire brigade has extinguished the fire. The plane has knocked a hole in the screenwell house wall on the river side. The pilot was thrown clear of the plane and is confirmed dead. Preliminary investigation indicates that no other personnel are injured.

This is a Drill

CONTROLLER REMINDER - Allow the fire brigade to run hose line(s). Do not allow them to charge the line(s).

TO: CONTROL ROOM OPERATOR

LOCATION: CONTROL ROOM

TIME: T = 08:05

MESSAGE: NO. 4

This is a Drill

The following annunciator alarm indications are received:

- 6900V Station Auxiliary Breaker Trips 52 ST5 and 52 ST6
- 480V SWGR. Motor Trips (COMMON)

Indicating Lights - Emergency DGs 21, 22 & 23 start

This is a Drill

TO: CONTROL ROOM OPERATOR

LOCATION: CONTROL ROOM

TIME: T = 08:10 APPROX. after CRO actuates switch to close BT 4-5

MESSAGE: NO. 5

This is a Drill

Breaker BT 4-5 will not close.

This is a Drill

TO: CONTROL ROOM OPERATOR

LOCATION: CONTROL ROOM

TIME: T = 08:15

MESSAGE: NO. 6

This is a Drill

Systems Operations reports that the 138 kV Feeder No. 95332 will not be available for four to eight hours because of problems at the Buchanan Sub-Station.

This is a Drill

TO: CONTROL ROOM OPERATOR

LOCATION: CONTROL ROOM

TIME: T = 08:20

MESSAGE: NO. 7

This is a Drill

Control Room indications are as follows:

- Reactor Coolant Pump No. 21 trip
- Reactor Trip
- Reactor Coolant Low Flow Channel Trip
- Reactor Coolant Pump No. 21 High Vibration
- Loss of Flow Single Loop
- Steam Line Delta-PSI
- Step increase in charging flow
- Reactor Coolant Pump #21 phase over current relay activation

This is a Drill

TO: CONTROL ROOM OPERATOR

LOCATION: CONTROL ROOM

TIME: T = 08:21 Approx. before Step 3 of E-0 is completed, otherwise ES-0.1 will be entered.

MESSAGE: NO. 8

This is a Drill

A safety injection signal is received based on SG pressure differential.

480 volt busses are energized from DGs.

This is a Drill

CONTROLLER FIELD REPORT A

TIME:	08:25 APPROX.
LOCATION:	BT 4-5 CONTROL PANEL
INFORMATION TO:	NPO/REPAIR TEAM
RADIATION LEVELS:	AS READ

The I&C Repair Team assigned by the OSC Coordinators will probably have an NPO and/or Maintenance person accompanying them.

If the Repair Team tries to actuate the breaker from the panel it will not operate.

The control circuit will have a resistor burned out and in need of replacement.

TO: SENIOR WATCH SUPERVISOR

LOCATION: CONTROL ROOM

TIME: T = 08:50

MESSAGE: NO. 9

This is a Drill

The Chem Tech has completed the analysis of the last RCS sample you requested at 0730 hours. The results are as follows.

Nuclide	08:00 hrs. uCi/ml
I-131	1.1×10^{0}
132	8.4×10^{0}
133	6.1×10^{0}
134	1.4×10^{1}
135	9.2×10^{0}
Xe-133	3.0×10^{1}
133m	2.0×10^{0}
135	5.8×10^{0}
135m	1.9×10^{0}
138	2.7×10^{0}
Kr-85	< LLD
85m	< LLD
87	1.1×10^{0}
88	< LLD
Rb-88	6.3×10^{0}
89	4.1×10^{0}
Te-132	< LLD
Cs-134	< LLD
137	< LLD
138	1.2×10^{1}
Ce-144	< LLD
La-140	< LLD
Ba-140	< LLD
Total	1.0×10^{2}
EBAR	1.77

This is a Drill

CONTROLLER FIELD REPORT B

TIME: 08:55

LOCATION: CONTROL ROOM/CHEM COUNTING AREA

INFORMATION TO: CRO/CHEM TECH AS APPROPRIATE

RADIATION LEVELS: NA

	RCS			SG ACTIVITY uCi/cc			
TIME	LEAK RATE GPM	pH	BORON ppm	21	22	23	24
05:30	-	6.6	450				
08:50	45			$< 1 \times 10^{-7}$ AT ALL TIMES			
09:15	65						
10:00	70						
10:20	150						
10:40			1795				
11:15		8.0	1950				
12:00		8.2	1975				
13:00		8.3	2000				
13:30		8.5	2010				
14:15		9.0	2050				

TO: CONTROL ROOM OPERATOR

LOCATION: CONTROL ROOM

TIME: T = 10:20

MESSAGE: NO. 10

This is a Drill

Indications in the Control room are as follows:

- High Containment pressure SI channel trip
- Pressurizer low pressure channel trip
- Pressurizer low pressure SI channel trip
- High containment sump level
- ARM R-2 and R-7 ALARM
- ARM R-11 and R-12 ALARM
- Containment Building Humidity high ALARM
- High Containment Pressure ALARM
- High-High Containment Pressure ALARM
- Decreasing VCT level
- Containment Isolation
- Major Increase In Charging Flow

This is a Drill

TO: SWS/CRO

LOCATION: CONTROL ROOM

TIME: T = 10:21 Approx. if E-0 not properly entered

MESSAGE: NO. 11

This is a Drill

Based on plant symptoms you should have manually safety injected and entered E-0, Reactor Trip or Safety Injection.

This is a Drill

TO: CONTROL ROOM OPERATOR

LOCATION: CONTROL ROOM

TIME: T = 10:30-10:44 if the CRO has not entered ES-1.2

MESSAGE: NO. 12

This is a Drill

For the data supplied at T = 10:30, E-0 requires a transition to ES-1.2, Post-LOCA Cooldown and Depressurization.

NOTE:

After T = 10:45 data is posted, this transition is not required.

This is a Drill

TO: CONTROL ROOM OPERATOR

LOCATION: CONTROL ROOM

TIME: T = 11:15

MESSAGE: NO. 13

This is a Drill

RWST Low Level Alarm sounds.

This is a Drill

TO: CONTROL ROOM OPERATOR

LOCATION: CONTROL ROOM

TIME: T = 11:35 after CRO places recirc switch #4 to "on"

MESSAGE: NO. 14

This is a Drill

Recirculation Pump No. 21 has an (amber) light.

This is a Drill

CONTROLLER FIELD REPORT C

TIME:	11:40 APPROX.
LOCATION:	CONTROL ROOM
INFORMATION TO:	CONTROL ROOM OPERATOR
RADIATION LEVELS:	AS READ

After a VC atmosphere sample indicates a hydrogen concentration of 2%, the CRO might inquire of the SWS whether the Hydrogen Recombiners should be made operational.

Notify the SWS and CRO that the scheduled oxygen delivery has been delayed.

The POM could request the TSC Manager to evaluate the feasibility of using the recombiners with an inadequate oxygen supply.

If the decision is to activate the recombiners, inform the NPO that he is unable to activate them.

CONTROLLER FIELD REPORT D

TIME: 11:45 APPROX.

LOCATION: APPROPRIATE 480 SWITCH GEAR

INFORMATION TO: REPAIR TEAM

RADIATION LEVELS: AS READ

It is expected the CRO will start the recirculation pumps 21 & 22 at 11:20 hours. Both pumps will start when the CRO places the recirculation switches (4&5) to the "on" position.

At 11:35 No. 21 Recirculation Pump fails and at 11:55 No. 22 Recirculation pump fails.

NPO and/or repair team will probably be sent to the 480 switchgear to determine why the Recirculation Pumps stopped running. The following information may be supplied at the appropriate time.

NO. 21 Recirc. Pump

The circuit breaker is in the closed position.
The motor leads are alive.
A check of the motor windings will show they are open.

NO. 22 Recirc. Pump

The circuit breaker is in the tripped position indicating overload.
A check will determine that the motor winding is grounded.

TO: CONTROL ROOM OPERATOR

LOCATION: CONTROL ROOM

TIME: T = 11:55 after CRO places recirc switch #5 to "on"

MESSAGE: NO. 15

This is a Drill

Recirculation Pump No. 22 has an (amber) light.

This is a Drill

TO: CONTROL ROOM OPERATOR

LOCATION: CONTROL ROOM

TIME: T = 11:56

MESSAGE: NO. 16

This is a Drill

MOV-885A has failed to open from the Control Room.

This is a Drill

TO: CONTROL ROOM OPERATOR

LOCATION: CONTROL ROOM

TIME: T = 11:58 after CRO places recirc switch #6 to "on"

MESSAGE: NO. 17

This is a Drill

MOV-888A&B failed to open from the Control Room.

This is a Drill

CONTROLLER FIELD REPORT D'

TIME: 12:00 APPROX.

LOCATION: CONTROL ROOM

INFORMATION TO: POM/SWS/NPO AS APPROPRIATE

RADIATION LEVELS: AS READ

Between 1155 and 1330 hours all SIS and recirculation flow through the core is lost.

Under these conditions players could be expected to pursue any means of restoring injection flow. Charging pump flow is all that is available. The watch could look to filling the Primary Water Storage Tank with water from the Unit No. 1 Condensate Storage Tank via the vacuum deaerator booster pumps via the 3 inch header to the PWST.

In addition the watch could look to refilling the Refueling Water Storage Tank from the fire water system.

Both the PWST and RWST can supply water to the suction of the charging pumps.

If any hose lines are run, simulate charging them.

TO: NPO

LOCATION: MOV-885A fuse location

TIME: T = 12:10 when NPO checks fuses

MESSAGE: NO. 18

This is a Drill

The fuses check out okay.

This is a Drill

TO: NPO

LOCATION: MOV-888A&B fuse location

TIME: T = 12:10 when NPO checks fuses

MESSAGE: NO. 19

This is a Drill

The fuses check out okay.

This is a Drill

TO: CONTROL ROOM OPERATOR

LOCATION: CONTROL ROOM

TIME: T = 13:00 Item 1 & 2 to CRO at this time
Item 3 as required

MESSAGE: NO. 20

This is a Drill

1. The nuclear side NPO notified you that he heard a muffled sound as if from an explosion.

2. ARM R-13 and R-14 ALARM.

3. Containment purge exhaust valves FCV-1172 and FCV-1173 have both lost closed status indication light.

This is a Drill

CONTROLLER FIELD REPORT E

TIME:	13:15 APPROX.
LOCATION:	FCV-1173
INFORMATION TO:	REPAIR TEAM
RADIATION LEVELS:	REFER TO SECTION VIII-D-4&5

It is expected that the POM will order a repair team to be sent to try and close the valve.

FCV-1173 is a butterfly type isolation valve located on the Containment Purge outlet duct which is the northern duct. It is normally operated by a spring loaded air piston requiring air to open and applied by a solenoid valve.

The hydrogen explosion in the VC has forced the inside valve FCV-1172 and the outside valve FCV-1173 to partially open.

A check of the spring loaded air piston reveals it is defective and a check of the butterfly operator shaft shows it is loose.

TO: MAINTENANCE REPAIR TEAM

LOCATION: MOV 885

TIME: T = 13:30

MESSAGE: NO. 21

This is a Drill

MOV 885-A has been manually opened.

This is a Drill

CONTROLLER FIELD REPORT F

TIME:	13:30 APPROX.
LOCATION:	CONTROL ROOM
INFORMATION TO:	CONTROL ROOM OPERATOR
RADIATION LEVELS:	AS READ

It is expected that the CRO will operate RHR Pump No. 22 for recirculation.

Operators may be confused how to handle EOPs based on the User's Guide. If the User's Guide is strictly followed, then FR-C.1 would not be left to establish RHR recirculation in ES-1.3.

However, good operator understanding of the situation would identify the ICC problem as a result of no circulation. Re-establishing RHR recirculation in ES-1.3 would certainly help to alleviate the ICC problem. Therefore, the operators should make the decision to establish RHR recirculation and secure the Containment Spray Pump No. 21 before the RWST is empty.

TO: EMERGENCY DIRECTOR

LOCATION: EOF

TIME: T = 14:00

MESSAGE: NO. 22

This is a Drill

Have a second shift emergency roster prepared listing all positions and personnel and give it to the EOF Controller.

This is a Drill

CONTROLLER FIELD REPORT G

TIME: 14:15 APPROX.

LOCATION: CONTROL ROOM

INFORMATION TO: CONTROL ROOM PERSONNEL

RADIATION LEVELS: AS READ

A problem may arise from the entry into FR-P.1 based on cooldown in excess of 60°F in one hour. The cooldown is a function of RHR circulation flow and the depressurization of the intact SGs.

Before FR-C.1 is completed, it requires that all intact SGs be depressurized to atmospheric pressure (an effort to cool the core below 400°F). However the procedure allows the operator to continue on. Ultimately the opeator transitions to E-1, and then to ES-1.3.

The cooldown causes an ORANGE condition on the Integrity CSF Status Tree. FR-P.1 is entered and this procedure is concerned with excessive cooldown and repressurization of plant. Obviously, the break is large enough to prevent any sizeable pressure increase. Therefore, the cooldown should not cause any PTS concerns. The operators should realize that the step in FR-C.1 overrides of FR-P.1.

TO: MAINTENANCE TEAM

LOCATION: FCV-1173

TIME: T = 14:30

MESSAGE: NO. 23

This is a Drill

You have repaired and closed the containment purge exhaust valve FCV-1173.

This is a Drill

CONTROLLER FIELD REPORT H

TIME:	14:45 APPROX.
LOCATION:	CONTROL ROOM
INFORMATION TO:	CONTROL ROOM PERSONNEL
RADIATION LEVELS:	AS READ

The operator should be in FR-P.1 at this time. It is expected that the Shift Technical Advisor will announce a RED condition on the Integrity CSF Status Tree. If the operator starts to exit FR-P.1 because of this RED condition, inform him that actions are already being taken because of an ORANGE condition and he should continue in FR-P.1.

TO: ALL FACILITY MANAGERS

LOCATION: ALL FACILITIES

TIME: T = 14:55

MESSAGE: NO. 24

This is a Drill

Relay the following to all participants.

At 14:55, this drill is suspended, and will recommence at 15:00. At that time, it will be assumed that it is two (2) days hence.

This is a Drill

TO: ALL FACILITY MANAGERS

LOCATION: ALL FACILITIES

TIME: T = 15:00 (two days later)

MESSAGE: NO. 25

This is a Drill

Two (2) days have passed. The plant is now in a safe and stable condition (i.e., core is cooled and radioactive release is terminated).

This is a Drill

TO: ALL EXERCISE PARTICIPANTS

LOCATION: ALL LOCATIONS

TIME: T = 15:45

MESSAGE: NO. 26

This is a Drill

All Exercise activities are terminated.

All reports, logs, data and other pertinent material will be collected at this time by an Observer/Controller.

This is a Drill

V. OBSERVER/CONTROLLER INSTRUCTIONS

A. Exercise Control Organization

Exercise Observer/Controllers shall be appointed in order to control, observe, and later critique exercise activities. The title "Observer/Controller" is used to designate either a single, or dual function during the exercise. Observers will be assigned to watch exercise activities as they occur. They will provide no input or active involvement or direction to any participants during the exercise. Their only function is to quietly observe in order to later help develop a representative critique of exercise participants' actions. Controllers will be assigned to various "key" locations in order to actively control the progress of the exercise. They will input Control and Contingency Messages at the appropriate times and provide any necessary interpretation to exercise participants. Controllers will be the only ones who can answer participants' questions. They will also function as Observers to help evaluate performance; thus Observer/Controllers. The designation below of Observer/Controller will mean either Observer, Controller, or Observer and Controller. The "Chief Controller" is the lead exercise manager (or controller) and will be located in the Control Room. Prior to the exercise, Observer/Controller instructions will be provided in order to familiarize all Observer/Controllers with the entire scope of the exercise, and answer any specific questions. Attachment A provides a listing of all exercise Observers and Controllers, as well as their locations. Attachment B provides a listing of all exercise players.

B. Exercise Control Instructions

1. All Controllers shall be pre-positioned at least one half hour prior to the first message time.

2. Prior to exercise commencement, all Controller communications will be tested to ensure satisfactory exercise control.

3. All Controllers will comply with instructions from the Chief Controller.

4. Each Controller will have copies of the messages controlling the progress of the exercise scenario. Messages shall be delivered by the Controller at the appropriate times, to the designated individual(s). In the case of emergency declarations, if the response of exercise participants necessitates the use of a contingency message, the situation should be discussed with the Chief Controller prior to issuance of the message.

Controllers will use the following techniques to control the exercise in accordance with the scenario.

a. Messages & Field Reports - Messages providing information are given to the participant at the specified time. The Controller may clarify the message by answering questions to ensure that no extraneous meaning is read into the message. Field reports are for the Controller's use and are not given to the participant. When the field report contains direction to the Controller to provide information it is done verbally. The Controller will not tell participants what action they are expected to take.

b. Contingency Messages - Contingency messages will be used only if participants fail to take the major actions expected from the control messages by the time designated. Controllers will give the contingency message to the designated participant and explain in as much detail as necessary what actions the participant is expected to perform. Contingency messages are used to keep the exercise on schedule, though their use may indicate inadequate plan implementation.

c. Control Information - Controllers for Health Physics and Environs Field Teams will provide instrument readings and other information to team members verbally when they request it by performing the measurements, etc. Controllers will refer to their current location and the applicable time period to obtain requested data from the appropriate tables in Section 8.

d. Control Guidance - Controllers will provide verbal guidance to participants to keep the exercise oriented to the pre-arranged scope and scenario. Controllers will direct participants to simulate certain actions that are outside the immediate scope of the exercise at the time participants announce their intention to perform the action. Observer/Controllers will note that the participants simulated the action. Participants must request information that is not automatically provided from participants at other locations. Controllers will steer participants away from types of information that are outside the exercise scope to avoid bogging the exercise down in a quest for information that Controllers do not possess and have no intention of providing.

NOTE: All messages controlling the progress of the exercise scenario are noted with a number.

5. All Controllers shall synchronize their watches to ensure that messages are delivered at the proper time. Times on messages are real time.

6. Each Controller will have copies of time-related plant and radiological parameters (data) corresponding to the development of the exercise scenario. This information should be issued, only upon request or when required, to the appropriate exercise participants by either the Control Room Drill Controller, or Controllers accompanying the radiological monitoring or inplant health physics personnel.

7. Controllers shall <u>not</u> provide information to the exercise participants regarding scenario development or resolution of problem areas encountered. The exercise participants are expected to obtain information through their own organizations and exercise their own judgements in determining response actions and resolving problems.

8. Any inquiries originating from the general public, as a result of exercise activities, will be referred to a Controller. An explanation will consist only of stating that a practice drill is underway at the plant and all events are simulated (i.e., not real).

9. Some exercise participants may insist that certain parts of the scenario are unrealistic. The Drill Controller has the sole authority to clarify any questions regarding scenario content.

10. Each Observer/Controller should use the Log Sheet contained at the end of this section to take detailed notes regarding the progress of the exercise and the responses of the exercise participants at their respective assigned locations. Each Observer/Controller should carefully note the arrival and departure times for exercise participants, the times at which major activities or milestones occur, and problem areas encountered. Observer/Controllers' comments should consider the evaluation elements set forth in Section C, "Exercise Evaluation Criteria." All notes taken should be retained for the purposes of reconstructing the exercise chronology and preparing a written critique of the exercise.

11. The exercise is tentatively scheduled to end as indicated in the last message. Instructions for reassembly of the Observer/Controller team will be given at that time.

NOTE: In the event of a real emergency during the exercise, the exercise may be immediately terminated by the Drill Controller, if deemed appropriate.

C. Exercise Evaluation Criteria

Observer/Controllers shall familiarize themselves with the duties and action requirements of the personnel they are monitoring.

Certain generic evaluation points are to be considered for all locations/participants, as appropriate. These include:

- Notification, alerting and mobilization of emergency response personnel.
- Adequate communications capabilities among onsite and offsite emergency response facilities and personnel.
- Timely activation of emergency facilities and teams.
- Clear and appropriate direction and control of all exercise activities.
- Emergency procedures are followed. In some cases they should be referred to during accomplishment of specific duties; e.g., dose assessment.
- Overall adequacy of the scenario to test the various emergency preparedness plans and procedures.
- Benefit of the exercise to its participants.

The following guidelines provide basic evaluation criteria which must be addressed by the Observer/Controller in order to effectively critique the exercise. Evaluation criteria are grouped according to exercise activity location and individual (or team) functions.

NOTE: Specific exercise performance must be compared directly with company emergency procedures. Therefore, individuals assigned as Observer/Controllers shall be cognizant of the respective procedures and all actions that shall be carried out by the participants they observe.

After completion of the drill, and before the end of the next normal working day, the Chief Controller shall hold a verbal critique, where all Observer/Controllers shall discuss their observations and any noted shortcoming, and present their recommendations to improve performance and emergency preparedness. Critique comments will be requested from all participants at the conclusion of the exercise.

1. Control Room

Prior to initiating the exercise, the Drill Controller will confer with the Senior Watch Supervisor (SWS) in order to identify any ongoing operational or maintenance activities that should not be interrupted. Those personnel engaged in these activities will be notified that they are to disregard any exercise-related announcements or activities. Emphasis should be made, however, that in the event of a real emergency the exercise may be terminated and station announcements will specify "THIS IS NOT A DRILL" and that instructions should be followed by all personnel.

The Observer/Controller shall observe the action of all personnel assigned to the Control Room and all personnel who report to the Control Room for assignment. In addition, he will pay special attention to the following:

- Use of map and overlays.
- Placement of calls to NRC, NYS and Counties.
- Notification, alerting and mobilization of emergency response personnel, including calling in off-duty personnel.
- Operations handling of accident conditions if appropriate.
- Instructions given to Search and Rescue teams, Repair and Corrective Action teams, and Rad Protection and Chem. Techs by the Senior Watch Supervisor (SWS).
- Does the SWS handle the emergency by directing his people or trying to do the work himself.
- Is the time frame of actions by the SWS reasonable enough.
- Deportment of all personnel in the Control Room.

The following procedures are to be used in the evaluation:

IP-1001	Mobilization of Onsite Emergency Organization
IP-1002	Emergency Notification and Communication
IP-1003	Planned Discharge of Containment Atmosphere During Accident Conditions
IP-1007	Determination of the Magnitude of Release and Exposure Rate
IP-1010	Search and Rescue Teams
IP-1011	Repair and Corrective Action
IP-1013	Recommendation of Protective Actions for Offsite Population

IP-1016	Obtaining Meteorological Data
IP-1020	Airborne Iodine - 131 Determination
IP-1021	Manual Update and Readout of Proteus Plant Parameter Data
IP-1024	Emergency Classification
IP-1037	Obtaining Offsite Reuter-Stokes Monitor Data
IP-1038	Emergency Personnel Exposure
IP-1043	Operation of the NYS Radiological Emergency Communications System (RECS)
IP-1047	Obtaining Offsite Exposure Rates from MIDAS Via Control Room ASCII Terminal.

Plus Immediate Action Procedures for SWS, CRO, WATCH HP, POM

2. <u>Technical Support Center</u>

The Observer/Controller should observe the following:

- o Timely activation
- o A minimum of four qualified persons manning the center.
- o Field survey performed.
- o Noble gas monitor set up.
- o "Frisker" set up.
- o Work performed in professional manner.
- o Phones are plugged in and direct lines to Control Room, NRC, and EOF are checked out.

The following procedures are to be used in the evaluation:

IP-1020	Airborne Iodine - 131 Determination
IP-1021	Manual Update and Readout of Proteus Plant Parameter Data
IP-1035	Technical Support Center
IP-1041	Use of the Triton to Monitor Noblegas

3. <u>Operations Control Center (OCC)</u>

The Observer/Controller should observe the following:

- o Timely initiation of a call to the paging service company.
- o Adequate communications, including how problems with the radio and telephones are handled. Message handling and communication logging procedures.

- Verification call to Indian Point Unit No. 2 Control Room for authenticity of emergency.
- Preparation of records of personnel who have called in.

The following procedure is to be used in the evaluation:

IP-1002 Emergency Notification and Communication

4. Assembly Area

The Observer/Controller should observe the following:

- Do they seek out their section or department accountability officer, generally stay together as a group and remain orderly?
- Were Assembly Area radiation surveys performed and results recorded? This will depend on whether there is an SAE or GE classification and releases to the environment.
- Is there documentation of accountability and is it understandable to others.

The following procedure is to be used in the evaluation:

IP-1027 Site Personnel Accountability and Evacuation

5. Operational Support Center

The Observer/Controller should observe the following:

- Is there documentation of accountability and is it understandable to others?
- Do the personnel awaiting assignment remain orderly?
- Were radiation surveys performed and recorded?
- Receipt of request to form teams.
- Handling the assignment of team members.

The following procedures are to be used in the evaluation.

IP-1020 Airborne Iodine - 131 Determination

IP-1023 Operational Support Center

IP-1027 Site Personnel Accountability and Evacuation

IP-1041 Use of the Triton to Monitor Noblegas.

6. Emergency Operations Facility

This is the command post for the interface with offsite authorities and it should seem so to the Observer/Controller. Look for the following things:

- The Emergency Director is in command of the EOF.
- The ORAD is in control of the radiological assessment activities, and reports results and recommendations to the Emergency Director in a timely and efficient manner.
- Any extra personnel, spectators and those awaiting orders are quietly standing out of the way.
- The H.P. or support personnel are performing duties in a timely and efficient manner and reporting results to either the Emergency Director or ORAD.
- Instrumentation deployed in the EOF is placed in a non-interfering position.
- Adequate communications, including how problems with the radio and telephone are handled. Message handling and communications logging procedures.
- Radioactive release rates, whole body and thyroid exposures to the offsite population are calculated quickly after the receipt of data from the Control Room or the offsite monitoring team(s).
- Prompt notification to the NRC, NYS and Counties of exposure data and changes to site meteorological conditions.
- The Emergency Director assigns, where possible, his routine calls to someone else thereby leaving himself free to command the action.
- Data forms filled out and turned in to the ORAD/Health Physicist.
- Timely deployment of teams.
- A central point for receipt of radiological monitoring data is designated and adequate communications with field teams demonstrated.
- Demonstrate ability to assess plant conditions, reclassify the incident (if appropriate), develop timely protective action recommendations, or communicate with offsite authorities in an accurate and timely manner.

- o Demonstrate ability to control radiological monitoring field teams for "plume-tracking," and ingestion pathway monitoring.

- o Demonstrate ability to develop recommendations for recovery and re-entry activities.

- o Demonstrate ability to provide radiation exposure control for emergency workers.

The following procedures are to be used in the evaluation:

IP-1002	Emergency Notification and Communication
IP-1003	Planned Discharge of Containment Atmosphere During Accident Conditions
IP-1004	Post Accident Offsite Environmental Surveys, Sampling and Counting
IP-1005	Use of SAM-2/RD-22 to Determine Thyroid Burdens
IP-1006	Site Perimeter Surveys
IP-1007	Determination of the Magnitude of Release and Exposure Rate
IP-1013	Recommendation of Protective Actions for Offsite Population
IP-1016	Obtaining Meteorological Data
IP-1020	Airborne Iodine - 131 Determination
IP-1021	Manual Update and Readout of Proteus Plant Parameter Data
IP-1024	Emergency Classification
IP-1029	Emergency Closeout/Class Reduction Written Summary to Authorities
IP-1036	Estimation of Population Dose Within the 10 Mile Emergency Planning Zone
IP-1037	Obtaining Offsite Reuter-Stokes Monitor Data
IP-1038	Emergency Personnel Exposure
IP-1041	Use of Triton to Monitor Noblegas
IP-1043	Operation of the NYS Radiological Emergency Communications System (RECS)
IP-1048	Deescalation of Emergency and Initiation of Recovery

Plus Immediate Action Procedures for ED, TA, ORAD, DAHP, STHP, MIDAS, EOF COMM, EOF CLERK

7. <u>Security Building(s) or Security Control Points</u>

It is to be noted that all normal practices, such as sign-out and use of the hand and foot monitor and the portal monitor, are to be accomplished unless the Rad Prot Technician gives other directions because of radiological conditions. The Observer/Controller will pay special attention to the above along with the following:

- o Timely activation or establishment of control points.

- No one is wearing Anti-C clothing when leaving the site.

- All alarms from monitoring equipment or computer card terminals are acknowledged.

The following procedures are to be used in the evaluation

IP-1017 Issuance and Use of Radiological Equipment Stored in the Command Guard House

8. Onsite Monitoring Teams

Onsite monitoring teams will normally be assigned field survey work onsite, outside of the protected area fence, and at the Service Center building complex. Check on the following items:

- Received KI dose (simulated) from ORAD if required.

  NOTE: Do not actually take the KI Dose.

- They have a dosimeter and film badge.

- They have a charcoal filter respirator when leaving the building complex to perform a survey.

- Radio check performed before leaving the EOF parking lot.

- Field readings taken along the route to the designated area. Simulated field data will only be available at designated monitoring points.

- Work performed in a professional manner.

- Data forms filled out as appropriate and turned in to the ORAD/Health Physicist.

The following procedures are to be used in the evaluation:

IP-1006 Site Perimeter Surveys
IP-1008 Personnel Radiological Check and Decontamination
IP-1009 Radiological Check and Decontamination of Vehicles
IP-1014 Radiological Check of Equipment Before it Leaves the Site
IP-1028 Onsite (out of plant) Field Surveys

9. Offsite Monitoring Teams

The Observer/Controller should observe the following:

- Received KI dose (simulated) from ORAD if required.

NOTE: Do not actually take the KI dose.

- o Operational check performed on survey instruments, sample counter and sample pump before leaving the EOF parking lot.
- o Equipment check-off performed.
- o Assignment of badges and dosimeters before leaving the EOF parking lot.
- o Charcoal cartridge respirator made available before leaving EOF parking lot.
- o Survey instrument made ready to take field readings.
- o Radio check-out by communication to EOF before leaving.
- o Beta and gamma field surveys performed on the way to sample point.
- o Sampling and field surveys performed at sample location.
- o Instrument calibration performed and samples counted.
- o Air sampling started.

The following procedures are to be used in the evaluation:

IP-1004	Post Accident Offsite Environmental Surveys, Sampling and Counting
IP-1006	Site Perimeter Surveys
IP-1008	Personnel Radiological Check and Decontamination
IP-1009	Radiological Check and Decontamination of Vehicles
IP-1015	Mobilization and Operational Procedure for Offsite Monitoring Teams - Immediate Response.
IP-1020	Airborne Iodine - 131 Determination
IP-1034	Mobilization and Operational Procedure for off-site Monitoring Teams - Supplemental Response
IP-1039	Offsite Contamination Checks

10. Radiation Protection Technician (RPT)

The Observer/Controller should observe the following:

- o RPT follows his instructions indicated in immediate action procedures.
- o RPT follows instructions from SWS or OSC coordinator.
- o RPT performs survey as indicated using appropriate instrumentation.

- o RPT performs duties during medical emergency as indicated in IP-1012.

The following procedures are to be used in the evaluation:

IP-1010	Search and Rescue Teams
IP-1011	Repair and Corrective Action
IP-1012	Onsite Medical Emergency
IP-1020	Airborne Iodine - 131 Determination
IP-1042	In-Plant Radiological Surveys and Sampling

Plus Immediate Action Procedure WATCH H.P.

11. <u>Chemistry Technician</u>

The Observer/Controller should observe the following:

- o Chemistry Technician follows Chemistry Procedures as appropriate.
- o Samples are actually collected and counted, as indicated by the scenario.
- o Results of sample counting (simulated and real) are transmitted to the SWS or OSC Coordinator as appropriate.

The following procedures are to be used in the evaluation:

IPC-E-001	Post Accident Sampling and Analysis of Reactor Coolant
IPC-E-002	Post Accident Sampling and Analysis of the Vapor Containment Atmosphere
IPC-E-003	Post Accident Sampling and Analysis of Plant Discharges for Noblegas, Radio-iodines and Particulates.
IPC-E-004	Post Accident Sampling and Analysis of Main Steam Releases to Atmosphere

12. <u>Maintenance Repair Team</u>

The Observer/Controller should observe the following:

- o Response and repair time.
- o Proper equipment brought to perform the work.
- o Maintenance Repair Team members follow Rad Prot Technician's instructions.
- o Radiological precautions taken.

The following procedures are to be used in the evaluation.

IP-1010	Search and Rescue Teams
IP-1011	Repair and Corrective Action
IP-1023	Operational Support Center

CONSOLIDATED EDISON COMPANY OF NEW YORK
INDIAN POINT UNIT NO. 2

EMERGENCY PREPAREDNESS EXERCISE

OBSERVER/CONTROLLER LOG SHEET

Name: _____ Date: _____

Location: _____

TIME	OBSERVATION/COMMENT

EMERGENCY DRILL ASSIGNMENT SHEET
CONTROLLERS-OBSERVERS

Dec. 7, 1988 Date

LOCATION	POSITION	NAME
CCR	Chief Controller	Schmeiser
	Controller	Inzirillo
	Controller - SWS Dose Assm't	------
	Observer - Communicators	Bollin
	Controller - Watch Rad Prot Tech	Visosky
	Controller - Watch Chem Tech	Peters
	Controller - Medical	------
	Controller - Fire Brigade	Cornax
	Controller - NPO	Carter
	Controller - Data Displayer	Seger
TSC	Controller	Ferraro
	Observer - Info flow & utilization	Sutton
	Observer - Communicator	Lyons
OSC	Controller - 53' Confr Rm TSC	Julian
	Controller - OSC Team	Sarc
	Controller - OSC Team	Murphy
	Controller - OSC Team	Nichols
	Controller - OSC Team (HP)	Shannon
	Controller - OSC Team (Chem)	Profeta
	Controller - 72' elevation	Rocco
EOF	Controller	Liebler, G.H.
	Observer - Communicators	Maier
	Observer - Dose Assm't	Gaynor
	Observer - Emergency Director	Miele
	Controller - Offsite Team	Sadlon

EMERGENCY DRILL ASSIGNMENT SHEET
CONTROLLERS-OBSERVERS

Dec. 7, 1988 Date

LOCATION	POSITION	NAME
EOF	Controller - Offsite Team	Resslhuber
	Controller - Onsite Team	Martucci
ASSEMBLY	Observer - Area A-B	Giaccone
	Observer - Simulator	Mastrodomenico
	Observer - Constr. Off. Complex	Downey
	Observer - M.O. Bldg.	------
	Observer - 72' TS/Admin	Finucan
	Observer - Unit No 1 Admin Bldg	Zellnock
	Observer - Service Center	------
	Observer - Security Admin Bldg.	Duncan
SECURITY	Controller - Command Guard House	Elsroth
	Observer - River Front Gate	------
	Observer - Main Gate	------
	Observer - Service Center	------
ENC	Controller	Assigned by D. Walden
	Observer	
	Observer	
	Observer	
CIG	Controller	Ross
CRC	Controller	Kachuk
ASTORIA-ECC	Controller	Peters
	Controller - Offsite Team	Megluevich
RC	Controller	Budnick
AEOF	Controller	------

EMERGENCY DRILL PLAYER ASSIGNMENT SHEET

Dec. 7, 1988 Date

JOB FUNCTION	NAME
Emergency Director (ED)	Quinn
Offsite Radiological Assessment Director	Homyk
Dose Assessment H.P.	Smith, D.
Survey Team H.P.	Falciano
Technical Advisor	Mooney
MIDAS Operators	Hewitt
EOF Information Liaison	McCann
Technical Advisor to Public Information	Bahr
Liaison to NYS EOC	Liberatori
EOF Communicator No. 1 & 2	Miller, Ellwanger
Offsite Team	Mettey, Stanford, Muller, Schacklinscky
Onsite Team	Zendek, Lynch
Astoria ECC Coordinator	Filippi
Astoria Backup Team(s)	McNamara, Potaro
Meteorologist	Cohen
EOF Clerical	Capalbo, Mathiesen, Smith, L.
SAS/Proteus Operator	Matalanis
Plant Operations Manager	Curry
TSC Manager	Limoges
I & C Coordinator	Naku
Health Physics Coordinator	Cullen, J.
Maintenance Coordinator	McKenna

EMERGENCY DRILL PLAYER ASSIGNMENT SHEET

Dec. 7, 1988 Date

JOB FUNCTION	NAME
Test & Performance Engineer	Perry
Systems Analysis Coordinator	Goebel
TSC Communicator	Eifler
Data Courier	Oscarson
TSC Communicator at CCR	Watson
Data Processor at CCR	Gorman, J.
Core Physics Engineer	Driscoll
Document Controller	LoBue
Data Logger/SAS-Proteus Operator	Genadry
TSC Clerical	Zbrowski, Hopkins
OSC Manager	Mazzurco
Accountability Officer	Kozelouzek
OSC Communicator	Owen, G.
Chemistry	Poplees, Riner
Maintenance	Montalvo, Reistad, Tandy, Odell, Carballo, Bunch, Mihalics
Instrument & Control	Flynn, Marquino, Karasinski, Olsen, Baumgarte, Edling, Russel
Quality Assurance	Landwaard, Trombeta
Radiation Protection	Lizzo, Baer, Burris, Jennings, Cullen, Gately
Material Control Storekeeper	Mete
Accident Victim	------
First Aid Team	------

EMERGENCY DRILL PLAYER ASSIGNMENT SHEET

Dec. 7, 1988 Date

JOB FUNCTION	NAME
Medical Representative	------
Senior Watch Supervisor	Hugo
Support Facility Supervisor	Murdock
Senior Reactor Operator	Langerfeld
Reactor Operator	Eisenhut
Nuclear Plant Operators (7)	Pasquale, Williams, Walsh, Stroppel, Geisler, Koutsakos, Olfati, Grosso, Carlino
Shift Technical Advisor	Davisson
Control Room Communicator	Primrose, E.
Security Supervisor	Monahan
Watch Rad Prot Tech	Williams
Watch Chem Tech	Gabriel
Administration & Logistics Manager	Vigliarolo
Engineering & Constr. Support Manager	Adolf
Central Information Group	Scheduled Watch Person
Recovery Manager	Bram
Schedule & Planning Coordinator	Gallagher
Project Management Specialist	Longano
Emergency News Center Director	Assigned by D. Walden
Emergency News Center Office Manager	
Corporate Spokesperson	
Information Coordinator	
Information Gatherer	

EMERGENCY DRILL PLAYER ASSIGNMENT SHEET

Dec. 7, 1988 Date

JOB FUNCTION	NAME
Writer	Assigned by D. Walden
Government Liaison	
Media Liaison	
Technical Expert	Astrab
Health Physics Expert	Parry
Documenter	
Status Board Person	
Rumor Control Staff	
Inquiry Response Staff	
Audio/Visual Coordinator	
Registration Coordinator	
Telecopier Operator	
Photocopier Operator	
Typist	
Messenger	

CONTROLLER PHONE LIST

CCR	737-8021	Next to Map Table
	739-1126	Next to Map Table
	526-5379	CR Communicator Position
TSC	737-2952	TSC Mgr's Desk
	526-5390	TSC Mgr's Desk
OSC	526-5555,6,7	OSC Coordinator's Desk @ TSC
	526-5558,70,73	OSC 72' Elev. OSC Mgr area
	526-5695,96	OSC 72' Elev. HP area
EOF	526-5263	All Consoles
	737-7235	Upper Level

PLANT STATUS LOG

SCENARIO NO. 1988

PARAMETER TIME	07:30	08:05	08:20	08:21	08:25	08:30	08:45
Reactor Shutdown (Y/N)	N	N	Y	Y	Y	Y	Y
NIS Power Range (%)	100	100	0	0	0	0	0
NIS Interim. Range #35 (Amps)	$2x10^{-4}$	$2x10^{-4}$	$4.4x10^{-6}$	$1x10^{-6}$	$6.7x10^{-9}$	$1x10^{-11}$	$1x10^{-11}$
NIS Interim. Range #36 (Amps)	$2x10^{-4}$	$2x10^{-4}$	$4.4x10^{-6}$	$1x10^{-6}$	$6.7x10^{-9}$	$1x10^{-11}$	$1x10^{-11}$
NIS Source Range #31 (CPM)	O/S	O/S	O/S	O/S	O/S	$5x10^{3}$	52
NIS Source Range #32 (CPM)	O/S	O/S	O/S	O/S	O/S	$5x10^{3}$	53
RCS Incor T/C (Center) (°F)	577	577	566	557	564	570	571
RCS Incore T/C (Highest) (°F)	585	585	572	562	569	575	576
RCS Pressure (PSIG)	2243	2235	2216	2206	2250	2240	2235
RCS Avg. Temp. (°F)	549	549	533	530	546	549	548
RCS Cold Leg Temp. (°F)	522	522	519	520	530	540	540
SAT Meter Margin(°F)	79	79	87	95	93	87	87
RCP in Service (Y/N)	Y	Y	N	N	N	N	N
Pressurizer Level (%)	24	25	20	18	26	30	25
Reactor Vessel Level (%)	100	100	100	100	100	100	100
S/G Levels #21 (%)	45	45	22	0	8	16	17
#22	45	45	30	0	2	10	11
#23	45	45	30	0	2	11	11
#24	45	45	30	0	1	10	11
S/G Press #21 (PSIG)	760	761	718	700	1000	976	960
#22	760	761	799	838	1000	976	960
#23	760	761	799	838	1000	976	960
#24	760	761	799	838	1000	976	960
VC Pressure (PSIG)	0	0	0	0	0	0	0
VC Temperature (°F)	100	101	102	102	103	104	104
VC Sump Level (ft.)	42	42	42	42	42	42	42
VC Hydrogen (%)	-	-	-	-	-	-	-
Aux FW Flow SG21 (GPM)	0	0	400	400	200	150	150
SG22 (GPM)	0	0	400	400	200	150	150
SG23 (GPM)	0	0	400	400	200	150	150
SG24 (GPM)	0	0	400	400	200	150	150
RWST Level (ft.)	37	37	37	37	37	37	37
Cond Stor Tk Level (ft)	30	30	30	30	30	30	30

PLANT STATUS LOG

SCENARIO NO. 1988

PARAMETER TIME	09:00	09:15	09:30	09:45	10:00	10:15	10:20
Reactor Shutdown (Y/N)	Y	Y	Y	Y	Y	Y	Y
NIS Power Range (%)	0	0	0	0	0	0	0
NIS Interim. Range #35 (Amps)	10^{-11}	10^{-11}	10^{-11}	10^{-11}	10^{-11}	10^{-11}	10^{-11}
NIS Interim. Range #36 (Amps)	10^{-11}	10^{-11}	10^{-11}	10^{-11}	10^{-11}	10^{-11}	10^{-11}
NIS Source Range #31 (CPM)	43	42	41	40	40	40	40
NIS Source Range #32 (CPM)	42	42	42	40	40	39	40
RCS Incor T/C (Center) (°F)	570	568	565	562	563	564	564
RCS Incore T/C (Highest) (°F)	575	572	570	566	567	568	568
RCS Pressure (PSIG)	2200	2190	2150	2100	2080	2030	2000
RCS Avg. Temp. (°F)	547	549	550	547	549	550	550
RCS Cold Leg Temp. (°F)	538	537	536	532	536	537	538
SAT Meter Margin(°F)	86	86	85	84	82	79	78
RCP in Service (Y/N)	N	N	N	N	N	N	N
Pressurizer Level (%)	21	19	17	17	18	18	19
Reactor Vessel Level (%)	100	100	100	100	100	100	100
S/G Levels #21 (%)	16	14	13	13	12	11	9
#22	10	9	8	9	8	9	10
#23	10	9	8	9	8	10	12
#24	10	9	8	9	8	11	10
S/G Press #21 (PSIG)	950	941	940	958	959	961	960
#22	950	941	940	958	959	961	960
#23	950	941	940	958	959	961	960
#24	950	941	940	958	959	961	960
VC Pressure (PSIG)	0	0	0	0	0	0	0
VC Temperature (°F)	104	105	105	105	105	105	105
VC Sump Level (ft.)	42	42	42	42	42	42	42
VC Hydrogen (%)	-	-	-	-	-	-	-
Aux FW Flow SG21 (GPM)	150	150	150	150	150	150	150
SG22 (GPM)	150	150	150	150	150	150	150
SG23 (GPM)	150	150	150	150	150	150	150
SG24 (GPM)	150	150	150	150	150	150	150
RWST Level (ft.)	37	37	37	37	37	37	37
Cond Stor Tk Level (ft)	30	30	30	30	30	30	30

PLANT STATUS LOG

SCENARIO NO. 1988

PARAMETER TIME	1020:30	1021:30	10:22	10:25	10:30	10:45	10:55
Reactor Shutdown (Y/N)	Y	Y	Y	Y	Y	Y	Y
NIS Power Range (%)	0	0	0	0	0	0	0
NIS Interim. Range #35 (Amps)	10^{-11}	10^{-11}	10^{-11}	10^{-11}	10^{-11}	10^{-11}	10^{-11}
NIS Interim. Range #36 (Amps)	10^{-11}	10^{-11}	10^{-11}	10^{-11}	10^{-11}	10^{-11}	10^{-11}
NIS Source Range #31 (CPM)	40	41	41	41	40	40	41
NIS Source Range #32 (CPM)	41	41	40	41	41	41	40
RCS Incor T/C (Center) (°F)	563	554	545	512	465	400	385
RCS Incore T/C (Highest) (°F)	567	558	546	516	470	405	388
RCS Pressure (PSIG)	1763	1043	974	760	480	240	195
RCS Avg. Temp. (°F)	549	547	545	510	470	399	380
RCS Cold Leg Temp. (°F)	537	540	544	509	464	390	381
SAT Meter Margin(°F)	57	0	0	0	0	0	0
RCP in Service (Y/N)	N	N	N	N	N	N	N
Pressurizer Level (%)	0	0	0	0	0	0	0
Reactor Vessel Level (%)	96	92	95	85	82	80	75
S/G Levels #21 (%)	12	7	10	16	20	30	38
#22	10	10	14	19	23	32	41
#23	15	15	18	23	26	35	43
#24	16	10	7	13	17	26	33
S/G Press #21 (PSIG)	970	1002	986	932	951	973	985
#22	970	1006	986	935	951	973	985
#23	970	1015	986	935	951	973	985
#24	970	1020	986	925	951	973	985
VC Pressure (PSIG)	2	20	32	35	34	33	32
VC Temperature (°F)	127	139	OFFSCALE	OFFSCALE	OFFSCALE	OFFSCALE	OFFSCALE
VC Sump Level (ft.)	43	45	>46	>46	>46	>46	>46
VC Hydrogen (%)	-	-	-	-	-	-	-
Aux FW Flow SG21 (GPM)	150	150	150	150	150	150	150
SG22 (GPM)	150	150	150	150	150	150	150
SG23 (GPM)	150	150	150	150	150	150	150
SG24 (GPM)	150	150	150	150	150	150	150
RWST Level (ft.)	36	35	33	30	27	23	19
Cond Stor Tk Level (ft)	29	29	29	29	29	29	29

PLANT STATUS LOG

SCENARIO NO. 1988

PARAMETER TIME	11:00	11:15	11:30	11:45	11:50	11:55	11:56
Reactor Shutdown (Y/N)	Y	Y	Y	Y	Y	Y	Y
NIS Power Range (%)	0	0	0	0	0	0	0
NIS Interim. Range #35 (Amps)	10^{-11}	10^{-11}	10^{-11}	10^{-11}	10^{-11}	10^{-11}	10^{-11}
NIS Interim. Range #36 (Amps)	10^{-11}	10^{-11}	10^{-11}	10^{-11}	10^{-11}	10^{-11}	10^{-11}
NIS Source Range #31 (CPM)	41	40	40	40	40	40	40
NIS Source Range #32 (CPM)	41	41	40	40	40	40	40
RCS Incor T/C (Center) (°F)	340	300	300	298	296	391	590
RCS Incore T/C (Highest) (°F)	344	305	302	301	299	410	603
RCS Pressure (PSIG)	106	65	59	53	50	40	200
RCS Avg. Temp. (°F)	338	302	299	297	295	389	585
RCS Cold Leg Temp. (°F)	337	300	296	295	294	381	580
SAT Meter Margin(°F)	0	0	0	0	0	0	0
RCP in Service (Y/N)	N	N	N	N	N	N	N
Pressurizer Level (%)	0	0	0	0	0	0	0
Reactor Vessel Level (%)	71	69	65	64	65	50	46
S/G Levels #21 (%)	45	52	53	52	53	52	51
#22	49	51	51	50	51	51	51
#23	50	52	52	51	52	52	52
#24	42	49	50	51	51	52	51
S/G Press #21 (PSIG)	995	1000	1000	1000	1000	1000	1000
#22	995	1000	1000	1000	1000	1000	1000
#23	995	1000	1000	1000	1000	1000	1000
#24	995	1000	1000	1000	1000	1000	1000
VC Pressure (PSIG)	30	27	22	15	13	10	9
VC Temperature (°F)	OFFSCALE	OFFSCALE	OFFSCALE	OFFSCALE	OFFSCALE	OFFSCALE	OFFSCALE
VC Sump Level (ft.)	>46	>46	>46	>46	>46	>46	>46
VC Hydrogen (%)	-	-	-	-	-	-	-
Aux FW Flow SG21 (GPM)	150	150	0	0	0	0	0
SG22 (GPM)	150	150	0	0	0	0	0
SG23 (GPM)	150	150	0	0	0	0	0
SG24 (GPM)	150	150	0	0	0	0	0
RWST Level (ft.)	15	10	9	8	8	7	7
Cond Stor Tk Level (ft)	28	28	28	28	28	28	28

PLANT STATUS LOG

SCENARIO NO. 1988

PARAMETER TIME	11:58	12:00	12:01	12:05	12:15	12:30	12:45
Reactor Shutdown (Y/N)	Y	Y	Y	Y	Y	Y	Y
NIS Power Range (%)	0	0	0	0	0	0	0
NIS Interim. Range #35 (Amps)	10^{-11}	10^{-11}	10^{-11}	10^{-11}	10^{-11}	10^{-11}	10^{-11}
NIS Interim. Range #36 (Amps)	10^{-11}	10^{-11}	10^{-11}	10^{-11}	10^{-11}	10^{-11}	10^{-11}
NIS Source Range #31 (CPM)	41	43	47	50	53	60	63
NIS Source Range #32 (CPM)	40	42	47	52	54	59	64
RCS Incor T/C (Center) (°F)	725	760	820	890	995	1121	1298
RCS Incore T/C (Highest) (°F)	740	790	826	895	1002	1126	1305
RCS Pressure (PSIG)	260	315	345	351	372	398	426
RCS Avg. Temp. (°F)	OFFSCALE	OFFSCALE	OFFSCALE	OFFSCALE	OFFSCALE	OFFSCALE	OFFSCALE
RCS Cold Leg Temp. (°F)	OFFSCALE	OFFSCALE	OFFSCALE	OFFSCALE	OFFSCALE	OFFSCALE	OFFSCALE
SAT Meter Margin(°F)	0	0	0	0	0	0	0
RCP in Service (Y/N)	N	N	N	N	N	N	N
Pressurizer Level (%)	0	0	0	0	0	0	0
Reactor Vessel Level (%)	44	43	42	40	37	35	33
S/G Levels #21 (%)	53	54	54	48	41	35	32
#22	52	53	54	49	42	36	31
#23	54	54	55	50	40	35	32
#24	53	54	54	48	42	36	33
S/G Press #21 (PSIG)	1010	1015	1002	863	480	310	265
#22	1010	1015	1002	863	480	310	265
#23	1010	1015	1002	863	480	310	265
#24	1010	1015	1002	863	480	310	265
VC Pressure (PSIG)	8	8	8	7	6	5	5
VC Temperature (°F)	OFFSCALE	OFFSCALE	OFFSCALE	OFFSCALE	OFFSCALE	OFFSCALE	OFFSCALE
VC Sump Level (ft.)	>46	>46	>46	>46	>46	>46	>46
VC Hydrogen (%)	-	-	-	-	-	-	-
Aux FW Flow SG21 (GPM)	0	0	0	200	400	400	400
SG22 (GPM)	0	0	0	200	400	400	400
SG23 (GPM)	0	0	0	200	400	400	400
SG24 (GPM)	0	0	0	200	400	400	400
RWST Level (ft.)	7	7	7	6	5	5	4
Cond Stor Tk Level (ft)	28	28	28	27	27	27	27

PLANT STATUS LOG

SCENARIO NO. 1988

PARAMETER TIME	13:00	13:15	13:30	13:45	14:00	14:15	14:30
Reactor Shutdown (Y/N)	Y	Y	Y	Y	Y	Y	Y
NIS Power Range (%)	0	0	0	0	0	0	0
NIS Interim. Range #35 (Amps)	10^{-11}	10^{-11}	10^{-11}	10^{-11}	10^{-11}	10^{-11}	10^{-11}
NIS Interim. Range #36 (Amps)	10^{-11}	10^{-11}	10^{-11}	10^{-11}	10^{-11}	10^{-11}	10^{-11}
NIS Source Range #31 (CPM)	69	75	79	51	42	41	40
NIS Source Range #32 (CPM)	69	74	78	50	41	41	41
RCS Incor T/C (Center) (°F)	1420	2165	2386	813	424	275	242
RCS Incore T/C (Highest) (°F)	1432	2175	2400	819	430	281	247
RCS Pressure (PSIG)	471	523	548	190	151	29	28
RCS Avg. Temp. (°F)	OFFSCALE	OFFSCALE	OFFSCALE	OFFSCALE	423	276	243
RCS Cold Leg Temp. (°F)	OFFSCALE	OFFSCALE	OFFSCALE	OFFSCALE	418	272	240
SAT Meter Margin(°F)	0	0	0	0	0	0	30
RCP in Service (Y/N)	N	N	N	N	N	N	N
Pressurizer Level (%)	0	0	0	0	0	0	0
Reactor Vessel Level (%)	32	30	28	40	54	69	75
S/G Levels #21 (%)	29	25	22	20	18	18	20
#22	28	26	21	20	19	18	21
#23	30	25	23	21	20	19	22
#24	31	24	22	19	19	18	20
S/G Press #21 (PSIG)	235	206	191	175	164	159	152
#22	235	206	191	175	164	159	152
#23	235	206	191	175	164	159	152
#24	235	206	191	175	164	159	152
VC Pressure (PSIG)	26	2	1	1	1	1	1
VC Temperature (°F)	OFFSCALE	OFFSCALE	OFFSCALE	OFFSCALE	OFFSCALE	OFFSCALE	OFFSCALE
VC Sump Level (ft.)	>46	>46	>46	>46	>46	>46	>46
VC Hydrogen (%)	-	-	-	-	-	-	-
Aux FW Flow SG21 (GPM)	400	400	400	400	400	400	400
SG22 (GPM)	400	400	400	400	400	400	400
SG23 (GPM)	400	400	400	400	400	400	400
SG24 (GPM)	400	400	400	400	400	400	400
RWST Level (ft.)	3	3	2	1	1	1	1
Cond Stor Tk Level (ft)	26	26	26	26	25	25	25

PLANT STATUS LOG

PARAMETER TIME	14:45	15:00**
Reactor Shutdown (Y/N)	Y	Y
NIS Power Range (%)	0	0
NIS Interim. Range #35 (Amps)	10^{-11}	10^{-11}
NIS Interim. Range #36 (Amps)	10^{-11}	10^{-11}
NIS Source Range #31 (CPM)	40	40
NIS Source Range #32 (CPM)	41	41
RCS Incor T/C (Center) (°F)	231	190
RCS Incore T/C (Highest) (°F)	235	194
RCS Pressure (PSIG)	29	27
RCS Avg. Temp. (°F)	230	190
RCS Cold Leg Temp. (°F)	227	189
SAT Meter Margin(°F)	37	76
RCP in Service (Y/N)	N	N
Pressurizer Level (%)	0	0
Reactor Vessel Level (%)	76	100
S/G Levels #21 (%)	23	55
#22	23	57
#23	24	54
#24	23	56
S/G Press #21 (PSIG)	139	0
#22	139	0
#23	139	0
#24	139	0
VC Pressure (PSIG)	1	0
VC Temperature (°F)	OFFSCALE	120
VC Sump Level (ft.)	>46	>46
VC Hydrogen (%)	-	-
Aux FW Flow SG21 (GPM)	400	0
SG22 (GPM)	400	0
SG23 (GPM)	400	0
SG24 (GPM)	400	0
RWST Level (ft.)	1	1
Cond Stor Tk Level (ft)	25	24

**2 Days Later

PARAMETER		TIME 07:30
Offsite Power Available	138KV	0
	13.8KV	0/S
Emergency D/Gs	#21	S
	#22	S
	#23	S
Gas Turbines	GT-1	S
	GT-2	S
	GT-3	S
SIS Pumps	#21	S
	#22	S
	#23	S
RHR Pumps	#21	S
	#22	S
Charging Pumps	#21	0
	#22	S
	#23	S
Containment Spray Pumps	#21	S
	#22	S
Recirculation Pumps	#21	S
	#22	S
Component Cooling Pumps	#21	0
	#22	0
	#23	S
Aux Component Cooling Pumps	#21	S
	#22	S
Aux Boiler Feed Pumps	#21	S
	#22	S
	#23	S
Fan Cooler Units	#21	0
	#22	0
	#23	0
	#24	0
	#25	0

PARAMETER		TIME 07:30
Service Water Pumps (Essential Header)	#21	0
	#22	0
	#23	S
	#24	S
	#25	0
	#26	0
Component Cool Heat Exch	#21	0
	#22	0
RHR Heat Exchanger	#21	S
	#22	S
Hydrogen Recombiner	#21	S
	#22	S
VC Isol. Phase A Complete (Y/N)		N
VC Isol. Phase B Complete (Y/N)		N
VC Isol. Vent. Complete (Y/N)		Y
Exceptions		
High Head SIS Flow	#21 (GPM)	0
	#22 (GPM)	0
	#23 (GPM)	0
	#24 (GPM)	0
Low Head SIS Flow	#21 (GPM)	0
	#22 (GPM)	0
	#23 (GPM)	0
	#24 (GPM)	0
Accumulator Level	#21 (%)	63
	#22 (%)	63
	#23 (%)	63
	#24 (%)	63

Legend:
O = Operating
O/S = Out of Service
S = Standby
* = Change on status from previous log

PARAMETER		TIME 07:45
Offsite Power Available	138KV	0
	13.8KV	O/S
Emergency D/Gs	#21	S
	#22	S
	#23	S
Gas Turbines	GT-1	S
	GT-2	S
	GT-3	S
SIS Pumps	#21	S
	#22	S
	#23	S
RHR Pumps	#21	S
	#22	S
Charging Pumps	#21	0
	#22	S
	#23	S
Containment Spray Pumps	#21	S
	#22	S
Recirculation Pumps	#21	S
	#22	S
Component Cooling Pumps	#21	0
	#22	0
	#23	S
Aux Component Cooling Pumps	#21	S
	#22	S
Aux Boiler Feed Pumps	#21	S
	#22	S
	#23	S
Fan Cooler Units	#21	0
	#22	0
	#23	0
	#24	0
	#25	0

PARAMETER		TIME 07:45
Service Water Pumps	#21	0
(Essential Header)	#22	0
	#23	S
	#24	S
	#25	0
	#26	0
Component Cool Heat Exch	#21	0
	#22	0
RHR Heat Exchanger	#21	S
	#22	S
Hydrogen Recombiner	#21	S
	#22	S
VC Isol. Phase A Complete (Y/N)		N
VC Isol. Phase B Complete (Y/N)		N
VC Isol. Vent. Complete (Y/N)		Y
Exceptions		
High Head SIS Flow	#21 (GPM)	0
	#22 (GPM)	0
	#23 (GPM)	0
	#24 (GPM)	0
Low Head SIS Flow	#21 (GPM)	0
	#22 (GPM)	0
	#23 (GPM)	0
	#24 (GPM)	0
Accumulator Level	#21 (%)	63
	#22 (%)	63
	#23 (%)	63
	#24 (%)	63

Legend: 0 = Operating
O/S = Out of Service
S = Standby
* = Change on status from previous log

PARAMETER		TIME 08:05
Offsite Power Available	138KV	O/S*
	13.8KV	O/S
Emergency D/Gs	#21	O*
	#22	O*
	#23	O*
Gas Turbines	GT-1	S
	GT-2	S
	GT-3	S
SIS Pumps	#21	S
	#22	S
	#23	S
RHR Pumps	#21	S
	#22	S
Charging Pumps	#21	O
	#22	S
	#23	S
Containment Spray Pumps	#21	S
	#22	S
Recirculation Pumps	#21	S
	#22	S
Component Cooling Pumps	#21	O
	#22	O
	#23	S
Aux Component Cooling Pumps	#21	S
	#22	S
Aux Boiler Feed Pumps	#21	S
	#22	S
	#23	S
Fan Cooler Units	#21	O
	#22	O
	#23	O
	#24	O
	#25	O

PARAMETER		TIME 08:05
Service Water Pumps	#21	O
(Essential Header)	#22	O
	#23	S
	#24	S
	#25	O
	#26	O
Component Cool Heat Exch	#21	O
	#22	O
RHR Heat Exchanger	#21	S
	#22	S
Hydrogen Recombiner	#21	S
	#22	S
VC Isol. Phase A Complete (Y/N)		N
VC Isol. Phase B Complete (Y/N)		N
VC Isol. Vent. Complete (Y/N)		Y
Exceptions		
High Head SIS Flow	#21 (GPM)	0
	#22 (GPM)	0
	#23 (GPM)	0
	#24 (GPM)	0
Low Head SIS Flow	#21 (GPM)	0
	#22 (GPM)	0
	#23 (GPM)	0
	#24 (GPM)	0
Accumulator Level	#21 (%)	63
	#22 (%)	63
	#23 (%)	63
	#24 (%)	63

Legend: O = Operating
O/S = Out of Service
S = Standby
* = Change on status from previous log

PARAMETER		TIME 08:21
Offsite Power Available	138KV	O/S
	13.8KV	O/S
Emergency D/Gs	#21	O
	#22	O
	#23	O
Gas Turbines	GT-1	S
	GT-2	S
	GT-3	S
SIS Pumps	#21	O*
	#22	O*
	#23	O*
RHR Pumps	#21	O*
	#22	O*
Charging Pumps	#21	O
	#22	S
	#23	S
Containment Spray Pumps	#21	S
	#22	S
Recirculation Pumps	#21	S
	#22	S
Component Cooling Pumps	#21	O
	#22	O
	#23	S
Aux Component Cooling Pumps	#21	O*
	#22	O*
Aux Boiler Feed Pumps	#21	O*
	#22	O*
	#23	O*
Fan Cooler Units	#21	O
	#22	O
	#23	O
	#24	O
	#25	O

PARAMETER		TIME 08:21
Service Water Pumps	#21	O
(Essential Header)	#22	O
	#23	S
	#24	S
	#25	O
	#26	O
Component Cool Heat Exch	#21	O
	#22	O
RHR Heat Exchanger	#21	S
	#22	S
Hydrogen Recombiner	#21	S
	#22	S
VC Isol. Phase A Complete (Y/N)		Y*
VC Isol. Phase B Complete (Y/N)		N
VC Isol. Vent. Complete (Y/N)		Y*
Exceptions		
High Head SIS Flow	#21 (GPM)	0
	#22 (GPM)	0
	#23 (GPM)	0
	#24 (GPM)	0
Low Head SIS Flow	#21 (GPM)	0
	#22 (GPM)	0
	#23 (GPM)	0
	#24 (GPM)	0
Accumulator Level	#21 (%)	63
	#22 (%)	63
	#23 (%)	63
	#24 (%)	63

Legend:
O = Operating
O/S = Out of Service
S = Standby
* = Change on status from previous log

PARAMETER		TIME 08:30
Offsite Power Available	138KV	O/S
	13.8KV	O/S
Emergency D/Gs	#21	O
	#22	O
	#23	O
Gas Turbines	GT-1	O*
	GT-2	S
	GT-3	S
SIS Pumps	#21	S*
	#22	S*
	#23	S*
RHR Pumps	#21	S*
	#22	S*
Charging Pumps	#21	O
	#22	S
	#23	S
Containment Spray Pumps	#21	S
	#22	S
Recirculation Pumps	#21	S
	#22	S
Component Cooling Pumps	#21	O
	#22	O
	#23	S
Aux Component Cooling Pumps	#21	O
	#22	O
Aux Boiler Feed Pumps	#21	O
	#22	O
	#23	O
Fan Cooler Units	#21	O
	#22	O
	#23	O
	#24	O
	#25	O

PARAMETER		TIME 08:30
Service Water Pumps (Essential Header)	#21	O
	#22	O
	#23	S
	#24	S
	#25	O
	#26	O
Component Cool Heat Exch	#21	O
	#22	O
RHR Heat Exchanger	#21	S
	#22	S
Hydrogen Recombiner	#21	S
	#22	S
VC Isol. Phase A Complete (Y/N)		Y
VC Isol. Phase B Complete (Y/N)		N
VC Isol. Vent. Complete (Y/N)		Y
Exceptions		
High Head SIS Flow	#21 (GPM)	0
	#22 (GPM)	0
	#23 (GPM)	0
	#24 (GPM)	0
Low Head SIS Flow	#21 (GPM)	0
	#22 (GPM)	0
	#23 (GPM)	0
	#24 (GPM)	0
Accumulator Level	#21 (%)	63
	#22 (%)	63
	#23 (%)	63
	#24 (%)	63

Legend:
O = Operating
O/S = Out of Service
S = Standby
* = Change on status from previous log

PARAMETER		TIME 10:20
Offsite Power Available	138KV	O/S
	13.8KV	O/S
Emergency D/Gs	#21	O
	#22	O
	#23	O
Gas Turbines	GT-1	O
	GT-2	S
	GT-3	S
SIS Pumps	#21	O*
	#22	O*
	#23	O*
RHR Pumps	#21	O*
	#22	O*
Charging Pumps	#21	O
	#22	S
	#23	S
Containment Spray Pumps	#21	S
	#22	S
Recirculation Pumps	#21	S
	#22	S
Component Cooling Pumps	#21	O
	#22	O
	#23	S
Aux Component Cooling Pumps	#21	O
	#22	O
Aux Boiler Feed Pumps	#21	O
	#22	O
	#23	O
Fan Cooler Units	#21	O
	#22	O
	#23	O
	#24	O
	#25	O

PARAMETER		TIME 10:20
Service Water Pumps	#21	O
(Essential Header)	#22	O
	#23	S
	#24	S
	#25	O
	#26	O
Component Cool Heat Exch	#21	O
	#22	O
RHR Heat Exchanger	#21	S
	#22	S
Hydrogen Recombiner	#21	S
	#22	S
VC Isol. Phase A Complete (Y/N)		Y
VC Isol. Phase B Complete (Y/N)		N
VC Isol. Vent. Complete (Y/N)		Y
Exceptions		
High Head SIS Flow	#21 (GPM)	O
	#22 (GPM)	O
	#23 (GPM)	O
	#24 (GPM)	O
Low Head SIS Flow	#21 (GPM)	O
	#22 (GPM)	O
	#23 (GPM)	O
	#24 (GPM)	O
Accumulator Level	#21 (%)	63
	#22 (%)	63
	#23 (%)	63
	#24 (%)	63

Legend:
O = Operating
O/S = Out of Service
S = Standby
* = Change on status from previous log

PARAMETER		TIME 10:22
Offsite Power Available	138KV	O/S
	13.8KV	O/S
Emergency D/Gs	#21	O
	#22	O
	#23	O
Gas Turbines	GT-1	O
	GT-2	S
	GT-3	S
SIS Pumps	#21	O
	#22	O
	#23	O
RHR Pumps	#21	O
	#22	O
Charging Pumps	#21	O
	#22	S
	#23	S
Containment Spray Pumps	#21	O*
	#22	O*
Recirculation Pumps	#21	S
	#22	S
Component Cooling Pumps	#21	O
	#22	O
	#23	S
Aux Component Cooling Pumps	#21	O
	#22	O
Aux Boiler Feed Pumps	#21	O
	#22	O
	#23	O
Fan Cooler Units	#21	O
	#22	O
	#23	O
	#24	O
	#25	O

PARAMETER		TIME 10:22
Service Water Pumps	#21	O
(Essential Header)	#22	O
	#23	S
	#24	S
	#25	O
	#26	O
Component Cool Heat Exch	#21	O
	#22	O
RHR Heat Exchanger	#21	S
	#22	S
Hydrogen Recombiner	#21	S
	#22	S
VC Isol. Phase A Complete (Y/N)		Y
VC Isol. Phase B Complete (Y/N)		Y*
VC Isol. Vent. Complete (Y/N)		Y
Exceptions		
High Head SIS Flow	#21 (GPM)	600*
	#22 (GPM)	600*
	#23 (GPM)	600*
	#24 (GPM)	600*
Low Head SIS Flow	#21 (GPM)	0
	#22 (GPM)	0
	#23 (GPM)	0
	#24 (GPM)	0
Accumulator Level	#21 (%)	63
	#22 (%)	63
	#23 (%)	63
	#24 (%)	63

Legend: O = Operating
O/S = Out of Service
S = Standby
* = Change on status from previous log

PARAMETER		TIME 10:30
Offsite Power Available	138KV	O/S
	13.8KV	O/S
Emergency D/Gs	#21	O
	#22	O
	#23	O
Gas Turbines	GT-1	O
	GT-2	S
	GT-3	S
SIS Pumps	#21	O
	#22	O
	#23	O
RHR Pumps	#21	O
	#22	O
Charging Pumps	#21	O
	#22	S
	#23	S
Containment Spray Pumps	#21	O
	#22	O
Recirculation Pumps	#21	S
	#22	S
Component Cooling Pumps	#21	O
	#22	O
	#23	S
Aux Component Cooling Pumps	#21	O
	#22	O
Aux Boiler Feed Pumps	#21	O
	#22	O
	#23	O
Fan Cooler Units	#21	O
	#22	O
	#23	O
	#24	O
	#25	O

PARAMETER		TIME 10:30
Service Water Pumps	#21	O
(Essential Header)	#22	O
	#23	S
	#24	S
	#25	O
	#26	O
Component Cool Heat Exch	#21	O
	#22	O
RHR Heat Exchanger	#21	S
	#22	S
Hydrogen Recombiner	#21	S
	#22	S
VC Isol. Phase A Complete (Y/N)		Y
VC Isol. Phase B Complete (Y/N)		Y
VC Isol. Vent. Complete (Y/N)		Y
Exceptions		
High Head SIS Flow	#21 (GPM)	600
	#22 (GPM)	600
	#23 (GPM)	600
	#24 (GPM)	600
Low Head SIS Flow	#21 (GPM)	0
	#22 (GPM)	0
	#23 (GPM)	0
	#24 (GPM)	0
Accumulator Level	#21 (%)	21*
	#22 (%)	21*
	#23 (%)	21*
	#24 (%)	21*

Legend:
O = Operating
O/S = Out of Service
S = Standby
* = Change on status from previous log

PARAMETER		TIME 10:45
Offsite Power Available	138KV	O/S
	13.8KV	O/S
Emergency D/Gs	#21	O
	#22	O
	#23	O
Gas Turbines	GT-1	O
	GT-2	S
	GT-3	S
SIS Pumps	#21	O
	#22	O
	#23	O
RHR Pumps	#21	O
	#22	O
Charging Pumps	#21	O
	#22	S
	#23	S
Containment Spray Pumps	#21	O
	#22	O
Recirculation Pumps	#21	S
	#22	S
Component Cooling Pumps	#21	O
	#22	O
	#23	S
Aux Component Cooling Pumps	#21	O
	#22	O
Aux Boiler Feed Pumps	#21	O
	#22	O
	#23	O
Fan Cooler Units	#21	O
	#22	O
	#23	O
	#24	O
	#25	O

PARAMETER		TIME 10:45
Service Water Pumps (Essential Header)	#21	O
	#22	O
	#23	S
	#24	S
	#25	O
	#26	O
Component Cool Heat Exch	#21	O
	#22	O
RHR Heat Exchanger	#21	S
	#22	S
Hydrogen Recombiner	#21	S
	#22	S
VC Isol. Phase A Complete (Y/N)		Y
VC Isol. Phase B Complete (Y/N)		Y
VC Isol. Vent. Complete (Y/N)		Y
Exceptions		
High Head SIS Flow	#21 (GPM)	600
	#22 (GPM)	600
	#23 (GPM)	600
	#24 (GPM)	600
Low Head SIS Flow	#21 (GPM)	250*
	#22 (GPM)	250*
	#23 (GPM)	250*
	#24 (GPM)	250*
Accumulator Level	#21 (%)	0*
	#22 (%)	0*
	#23 (%)	0*
	#24 (%)	0*

Legend:
O = Operating
O/S = Out of Service
S = Standby
* = Change on status from previous log

PARAMETER		TIME 10:55
Offsite Power Available	138KV	O/S
	13.8KV	O/S
Emergency D/Gs	#21	O
	#22	O
	#23	O
Gas Turbines	GT-1	O
	GT-2	S
	GT-3	S
SIS Pumps	#21	O
	#22	O
	#23	O
RHR Pumps	#21	O
	#22	O
Charging Pumps	#21	O
	#22	S
	#23	S
Containment Spray Pumps	#21	O
	#22	O
Recirculation Pumps	#21	S
	#22	S
Component Cooling Pumps	#21	O
	#22	O
	#23	S
Aux Component Cooling Pumps	#21	O
	#22	O
Aux Boiler Feed Pumps	#21	O
	#22	O
	#23	O
Fan Cooler Units	#21	O
	#22	O
	#23	O
	#24	O
	#25	O

PARAMETER		TIME 10:55
Service Water Pumps (Essential Header)	#21	O
	#22	O
	#23	S
	#24	S
	#25	O
	#26	O
Component Cool Heat Exch	#21	O
	#22	O
RHR Heat Exchanger	#21	S
	#22	S
Hydrogen Recombiner	#21	S
	#22	S
VC Isol. Phase A Complete (Y/N)		Y
VC Isol. Phase B Complete (Y/N)		Y
VC Isol. Vent. Complete (Y/N)		Y
Exceptions		
High Head SIS Flow	#21 (GPM)	600
	#22 (GPM)	600
	#23 (GPM)	600
	#24 (GPM)	600
Low Head SIS Flow	#21 (GPM)	1000*
	#22 (GPM)	1000*
	#23 (GPM)	1000*
	#24 (GPM)	1000*
Accumulator Level	#21 (%)	0
	#22 (%)	0
	#23 (%)	0
	#24 (%)	0

Legend:
O = Operating
O/S = Out of Service
S = Standby
* = Change on status from previous log

PARAMETER		TIME 11:15
Offsite Power Available	138KV	O/S
	13.8KV	O/S
Emergency D/Gs	#21	O
	#22	O
	#23	O
Gas Turbines	GT-1	O
	GT-2	S
	GT-3	S
SIS Pumps	#21	O
	#22	O
	#23	O
RHR Pumps	#21	O
	#22	O
Charging Pumps	#21	O
	#22	S
	#23	S
Containment Spray Pumps	#21	O
	#22	O
Recirculation Pumps	#21	S
	#22	S
Component Cooling Pumps	#21	O
	#22	O
	#23	S
Aux Component Cooling Pumps	#21	O
	#22	O
Aux Boiler Feed Pumps	#21	O
	#22	O
	#23	O
Fan Cooler Units	#21	O
	#22	O
	#23	O
	#24	O
	#25	O

PARAMETER		TIME 11:15
Service Water Pumps (Essential Header)	#21	O
	#22	O
	#23	S
	#24	S
	#25	O
	#26	O
Component Cool Heat Exch	#21	O
	#22	O
RHR Heat Exchanger	#21	S
	#22	S
Hydrogen Recombiner	#21	S
	#22	S
VC Isol. Phase A Complete (Y/N)		Y
VC Isol. Phase B Complete (Y/N)		Y
VC Isol. Vent. Complete (Y/N)		Y
Exceptions		
High Head SIS Flow	#21 (GPM)	600
	#22 (GPM)	600
	#23 (GPM)	600
	#24 (GPM)	600
Low Head SIS Flow	#21 (GPM)	3000*
	#22 (GPM)	3000*
	#23 (GPM)	3000*
	#24 (GPM)	3000*
Accumulator Level	#21 (%)	0
	#22 (%)	0
	#23 (%)	0
	#24 (%)	0

Legend:
O = Operating
O/S = Out of Service
S = Standby
* = Change on status from previous log

PARAMETER		TIME 11:20
Offsite Power Available	138KV	O/S
	13.8KV	O/S
Emergency D/Gs	#21	O
	#22	O
	#23	O
Gas Turbines	GT-1	O
	GT-2	S
	GT-3	S
SIS Pumps	#21	S*
	#22	S*
	#23	S*
RHR Pumps	#21	S*
	#22	S*
Charging Pumps	#21	O
	#22	S
	#23	S
Containment Spray Pumps	#21	O
	#22	S*
Recirculation Pumps	#21	O*
	#22	O*
Component Cooling Pumps	#21	O
	#22	O
	#23	S
Aux Component Cooling Pumps	#21	O
	#22	O
Aux Boiler Feed Pumps	#21	O
	#22	O
	#23	O
Fan Cooler Units	#21	O
	#22	O
	#23	O
	#24	O
	#25	O

PARAMETER		TIME 11:20
Service Water Pumps (Essential Header)	#21	O
	#22	O
	#23	S
	#24	S
	#25	O
	#26	O
Component Cool Heat Exch	#21	O
	#22	O
RHR Heat Exchanger	#21	S
	#22	S
Hydrogen Recombiner	#21	S
	#22	S
VC Isol. Phase A Complete (Y/N)		Y
VC Isol. Phase B Complete (Y/N)		Y
VC Isol. Vent. Complete (Y/N)		Y
Exceptions		
High Head SIS Flow	#21 (GPM)	O*
	#22 (GPM)	O*
	#23 (GPM)	O*
	#24 (GPM)	O*
Low Head SIS Flow	#21 (GPM)	3000
	#22 (GPM)	3000
	#23 (GPM)	3000
	#24 (GPM)	3000
Accumulator Level	#21 (%)	O
	#22 (%)	O
	#23 (%)	O
	#24 (%)	O

Legend:
O = Operating
O/S = Out of Service
S = Standby
* = Change on status from previous log

PARAMETER		TIME 11:35
Offsite Power Available	138KV	O/S
	13.8KV	O/S
Emergency D/Gs	#21	O
	#22	O
	#23	O
Gas Turbines	GT-1	O
	GT-2	S
	GT-3	S
SIS Pumps	#21	S
	#22	S
	#23	S
RHR Pumps	#21	O
	#22	S
Charging Pumps	#21	O
	#22	S
	#23	S
Containment Spray Pumps	#21	O
	#22	S
Recirculation Pumps	#21	O/S*
	#22	O
Component Cooling Pumps	#21	O
	#22	O
	#23	S
Aux Component Cooling Pumps	#21	O
	#22	O
Aux Boiler Feed Pumps	#21	O
	#22	O
	#23	O
Fan Cooler Units	#21	O
	#22	O
	#23	O
	#24	O
	#25	O

PARAMETER		TIME 11:35
Service Water Pumps (Essential Header)	#21	O
	#22	O
	#23	S
	#24	S
	#25	O
	#26	O
Component Cool Heat Exch	#21	O
	#22	O
RHR Heat Exchanger	#21	O*
	#22	O*
Hydrogen Recombiner	#21	S
	#22	S
VC Isol. Phase A Complete (Y/N)		Y
VC Isol. Phase B Complete (Y/N)		Y
VC Isol. Vent. Complete (Y/N)		Y
Exceptions		
High Head SIS Flow	#21 (GPM)	O
	#22 (GPM)	O
	#23 (GPM)	O
	#24 (GPM)	O
Low Head SIS Flow	#21 (GPM)	1500*
	#22 (GPM)	1500*
	#23 (GPM)	1500*
	#24 (GPM)	1500*
Accumulator Level	#21 (%)	O
	#22 (%)	O
	#23 (%)	O
	#24 (%)	O

Legend:
O = Operating
O/S = Out of Service
S = Standby
* = Change on status from previous log

PARAMETER		TIME 11:55
Offsite Power Available	138KV	O/S
	13.8KV	O/S
Emergency D/Gs	#21	O
	#22	O
	#23	O
Gas Turbines	GT-1	O
	GT-2	S
	GT-3	S
SIS Pumps	#21	S
	#22	S
	#23	S
RHR Pumps	#21	S
	#22	S
Charging Pumps	#21	O
	#22	S
	#23	S
Containment Spray Pumps	#21	O
	#22	S
Recirculation Pumps	#21	O/S
	#22	O/S*
Component Cooling Pumps	#21	O
	#22	O
	#23	S
Aux Component Cooling Pumps	#21	O
	#22	O
Aux Boiler Feed Pumps	#21	O
	#22	O
	#23	O
Fan Cooler Units	#21	O
	#22	O
	#23	O
	#24	O
	#25	O

PARAMETER		TIME 11:55
Service Water Pumps	#21	O
(Essential Header)	#22	O
	#23	S
	#24	S
	#25	O
	#26	O
Component Cool Heat Exch	#21	O
	#22	O
RHR Heat Exchanger	#21	O
	#22	O
Hydrogen Recombiner	#21	S
	#22	S
VC Isol. Phase A Complete (Y/N)		Y
VC Isol. Phase B Complete (Y/N)		Y
VC Isol. Vent. Complete (Y/N)		Y
Exceptions		
High Head SIS Flow	#21 (GPM)	O
	#22 (GPM)	O
	#23 (GPM)	O
	#24 (GPM)	O
Low Head SIS Flow	#21 (GPM)	O*
	#22 (GPM)	O*
	#23 (GPM)	O*
	#24 (GPM)	O*
Accumulator Level	#21 (%)	O
	#22 (%)	O
	#23 (%)	O
	#24 (%)	O

Legend:
O = Operating
O/S = Out of Service
S = Standby
* = Change on status from previous log

PARAMETER		TIME 11:56
Offsite Power Available	138KV	O/S
	13.8KV	O/S
Emergency D/Gs	#21	O
	#22	O
	#23	O
Gas Turbines	GT-1	O
	GT-2	S
	GT-3	S
SIS Pumps	#21	S
	#22	S
	#23	S
RHR Pumps	#21	S
	#22	O/S*
Charging Pumps	#21	O
	#22	S
	#23	S
Containment Spray Pumps	#21	O
	#22	S
Recirculation Pumps	#21	O/S
	#22	O/S
Component Cooling Pumps	#21	O
	#22	O
	#23	S
Aux Component Cooling Pumps	#21	O
	#22	O
Aux Boiler Feed Pumps	#21	O
	#22	O
	#23	O
Fan Cooler Units	#21	O
	#22	O
	#23	O
	#24	O
	#25	O

PARAMETER		TIME 11:56
Service Water Pumps (Essential Header)	#21	O
	#22	O
	#23	S
	#24	S
	#25	O
	#26	O
Component Cool Heat Exch	#21	O
	#22	O
RHR Heat Exchanger	#21	O
	#22	O
Hydrogen Recombiner	#21	S
	#22	S
VC Isol. Phase A Complete (Y/N)		Y
VC Isol. Phase B Complete (Y/N)		Y
VC Isol. Vent. Complete (Y/N)		Y
Exceptions		
High Head SIS Flow	#21 (GPM)	O
	#22 (GPM)	O
	#23 (GPM)	O
	#24 (GPM)	O
Low Head SIS Flow	#21 (GPM)	O
	#22 (GPM)	O
	#23 (GPM)	O
	#24 (GPM)	O
Accumulator Level	#21 (%)	O
	#22 (%)	O
	#23 (%)	O
	#24 (%)	O

Legend:
O = Operating
O/S = Out of Service
S = Standby
* = Change on status from previous log

PARAMETER		TIME 11:58
Offsite Power Available	138KV	O/S
	13.8KV	O/S
Emergency D/Gs	#21	O
	#22	O
	#23	O
Gas Turbines	GT-1	O
	GT-2	S
	GT-3	S
SIS Pumps	#21	O/S*
	#22	O/S*
	#23	O/S*
RHR Pumps	#21	S
	#22	O/S
Charging Pumps	#21	O
	#22	S
	#23	S
Containment Spray Pumps	#21	O
	#22	S
Recirculation Pumps	#21	O/S
	#22	O/S
Component Cooling Pumps	#21	O
	#22	O
	#23	S
Aux Component Cooling Pumps	#21	O
	#22	O
Aux Boiler Feed Pumps	#21	O
	#22	O
	#23	O
Fan Cooler Units	#21	O
	#22	O
	#23	O
	#24	O
	#25	O

PARAMETER		TIME 11:58
Service Water Pumps	#21	O
(Essential Header)	#22	O
	#23	S
	#24	S
	#25	O
	#26	O
Component Cool Heat Exch	#21	O
	#22	O
RHR Heat Exchanger	#21	O
	#22	O
Hydrogen Recombiner	#21	S
	#22	S
VC Isol. Phase A Complete (Y/N)		Y
VC Isol. Phase B Complete (Y/N)		Y
VC Isol. Vent. Complete (Y/N)		Y
Exceptions		
High Head SIS Flow	#21 (GPM)	O
	#22 (GPM)	O
	#23 (GPM)	O
	#24 (GPM)	O
Low Head SIS Flow	#21 (GPM)	O
	#22 (GPM)	O
	#23 (GPM)	O
	#24 (GPM)	O
Accumulator Level	#21 (%)	O
	#22 (%)	O
	#23 (%)	O
	#24 (%)	O

Legend:
O = Operating
O/S = Out of Service
S = Standby
* = Change on status from previous log

PLANT STATUS LOG

SCENARIO NO. 1988

PARAMETER		TIME 12:05
Offsite Power Available	138KV	O/S
	13.8KV	O/S
Emergency D/Gs	#21	O
	#22	O
	#23	O
Gas Turbines	GT-1	O
	GT-2	S
	GT-3	S
SIS Pumps	#21	O/S
	#22	O/S
	#23	O/S
RHR Pumps	#21	S
	#22	O/S
Charging Pumps	#21	O
	#22	O*
	#23	O*
Containment Spray Pumps	#21	O
	#22	S
Recirculation Pumps	#21	O/S
	#22	O/S
Component Cooling Pumps	#21	O
	#22	O
	#23	S
Aux Component Cooling Pumps	#21	O
	#22	O
Aux Boiler Feed Pumps	#21	O
	#22	O
	#23	O
Fan Cooler Units	#21	O
	#22	O
	#23	O
	#24	O
	#25	O

PARAMETER		TIME 12:05
Service Water Pumps (Essential Header)	#21	O
	#22	O
	#23	S
	#24	S
	#25	O
	#26	O
Component Cool Heat Exch	#21	O
	#22	O
RHR Heat Exchanger	#21	O
	#22	O
Hydrogen Recombiner	#21	S
	#22	S
VC Isol. Phase A Complete (Y/N)		Y
VC Isol. Phase B Complete (Y/N)		Y
VC Isol. Vent. Complete (Y/N)		Y
Exceptions		
High Head SIS Flow	#21 (GPM)	O
	#22 (GPM)	O
	#23 (GPM)	O
	#24 (GPM)	O
Low Head SIS Flow	#21 (GPM)	O
	#22 (GPM)	O
	#23 (GPM)	O
	#24 (GPM)	O
Accumulator Level	#21 (%)	O
	#22 (%)	O
	#23 (%)	O
	#24 (%)	O

Legend:
O = Operating
O/S = Out of Service
S = Standby
* = Change on status from previous log

PARAMETER		TIME 13:00
Offsite Power Available	138KV	O/S
	13.8KV	O/S
Emergency D/Gs	#21	O
	#22	O
	#23	O
Gas Turbines	GT-1	O
	GT-2	S
	GT-3	S
SIS Pumps	#21	O/S
	#22	O/S
	#23	O/S
RHR Pumps	#21	S
	#22	O/S
Charging Pumps	#21	O
	#22	O
	#23	O
Containment Spray Pumps	#21	O
	#22	S
Recirculation Pumps	#21	O/S
	#22	O/S
Component Cooling Pumps	#21	O
	#22	O
	#23	S
Aux Component Cooling Pumps	#21	O
	#22	O
Aux Boiler Feed Pumps	#21	O
	#22	O
	#23	O
Fan Cooler Units	#21	O
	#22	O
	#23	O
	#24	O
	#25	O

PARAMETER		TIME 13:00
Service Water Pumps	#21	O
(Essential Header)	#22	O
	#23	S
	#24	S
	#25	O
	#26	O
Component Cool Heat Exch	#21	O
	#22	O
RHR Heat Exchanger	#21	O
	#22	O
Hydrogen Recombiner	#21	S
	#22	S
VC Isol. Phase A Complete (Y/N)		N*
VC Isol. Phase B Complete (Y/N)		Y
VC Isol. Vent. Complete (Y/N)		Y
Exceptions	FCV-1172 & 73 OPEN*	
High Head SIS Flow	#21 (GPM)	O
	#22 (GPM)	O
	#23 (GPM)	O
	#24 (GPM)	O
Low Head SIS Flow	#21 (GPM)	O
	#22 (GPM)	O
	#23 (GPM)	O
	#24 (GPM)	O
Accumulator Level	#21 (%)	O
	#22 (%)	O
	#23 (%)	O
	#24 (%)	O

Legend:
O = Operating
O/S = Out of Service
S = Standby
* = Change on status from previous log

PARAMETER		TIME 13:30
Offsite Power Available	138KV	O/S
	13.8KV	O/S
Emergency D/Gs	#21	O
	#22	O
	#23	O
Gas Turbines	GT-1	O
	GT-2	S
	GT-3	S
SIS Pumps	#21	O/S
	#22	O/S
	#23	O/S
RHR Pumps	#21	S
	#22	O*
Charging Pumps	#21	O
	#22	O
	#23	O
Containment Spray Pumps	#21	S*
	#22	S
Recirculation Pumps	#21	O/S
	#22	O/S
Component Cooling Pumps	#21	O
	#22	O
	#23	S
Aux Component Cooling Pumps	#21	O
	#22	O
Aux Boiler Feed Pumps	#21	O
	#22	O
	#23	O
Fan Cooler Units	#21	O
	#22	O
	#23	O
	#24	O
	#25	O

PARAMETER		TIME 13:30
Service Water Pumps (Essential Header)	#21	O
	#22	O
	#23	S
	#24	S
	#25	O
	#26	O
Component Cool Heat Exch	#21	O
	#22	O
RHR Heat Exchanger	#21	O
	#22	O
Hydrogen Recombiner	#21	S
	#22	S
VC Isol. Phase A Complete (Y/N)		N
VC Isol. Phase B Complete (Y/N)		Y
VC Isol. Vent. Complete (Y/N)		Y
Exceptions	FCV-1172 & 73 OPEN	
High Head SIS Flow	#21 (GPM)	O
	#22 (GPM)	O
	#23 (GPM)	O
	#24 (GPM)	O
Low Head SIS Flow	#21 (GPM)	O
	#22 (GPM)	O
	#23 (GPM)	O
	#24 (GPM)	O
Accumulator Level	#21 (%)	O
	#22 (%)	O
	#23 (%)	O
	#24 (%)	O

Legend:
O = Operating
O/S = Out of Service
S = Standby
* = Change on status from previous log

PARAMETER		TIME 13:45
Offsite Power Available	138KV	O/S
	13.8KV	O/S
Emergency D/Gs	#21	O
	#22	O
	#23	O
Gas Turbines	GT-1	O
	GT-2	S
	GT-3	S
SIS Pumps	#21	O/S
	#22	O/S
	#23	O/S
RHR Pumps	#21	S
	#22	O
Charging Pumps	#21	O
	#22	O
	#23	O
Containment Spray Pumps	#21	S
	#22	S
Recirculation Pumps	#21	O/S
	#22	O/S
Component Cooling Pumps	#21	O
	#22	O
	#23	S
Aux Component Cooling Pumps	#21	O
	#22	O
Aux Boiler Feed Pumps	#21	O
	#22	O
	#23	O
Fan Cooler Units	#21	O
	#22	O
	#23	O
	#24	O
	#25	O

PARAMETER		TIME 13:45
Service Water Pumps (Essential Header)	#21	O
	#22	O
	#23	S
	#24	S
	#25	O
	#26	O
Component Cool Heat Exch	#21	O
	#22	O
RHR Heat Exchanger	#21	O
	#22	O
Hydrogen Recombiner	#21	S
	#22	S
VC Isol. Phase A Complete (Y/N)		N
VC Isol. Phase B Complete (Y/N)		Y
VC Isol. Vent. Complete (Y/N)		Y
Exceptions	FCV-1172 & 73 OPEN	
High Head SIS Flow	#21 (GPM)	O
	#22 (GPM)	O
	#23 (GPM)	O
	#24 (GPM)	O
Low Head SIS Flow	#21 (GPM)	450*
	#22 (GPM)	450*
	#23 (GPM)	450*
	#24 (GPM)	450*
Accumulator Level	#21 (%)	O
	#22 (%)	O
	#23 (%)	O
	#24 (%)	O

Legend:
O = Operating
O/S = Out of Service
S = Standby
* = Change on status from previous log

PARAMETER		TIME 14:00
Offsite Power Available	138KV	O/S
	13.8KV	O/S
Emergency D/Gs	#21	O
	#22	O
	#23	O
Gas Turbines	GT-1	O
	GT-2	S
	GT-3	S
SIS Pumps	#21	O/S
	#22	O/S
	#23	O/S
RHR Pumps	#21	S
	#22	O
Charging Pumps	#21	O
	#22	O
	#23	O
Containment Spray Pumps	#21	S
	#22	S
Recirculation Pumps	#21	O/S
	#22	O/S
Component Cooling Pumps	#21	O
	#22	O
	#23	S
Aux Component Cooling Pumps	#21	O
	#22	O
Aux Boiler Feed Pumps	#21	O
	#22	O
	#23	O
Fan Cooler Units	#21	O
	#22	O
	#23	O
	#24	O
	#25	O

PARAMETER		TIME 14:00
Service Water Pumps (Essential Header)	#21	O
	#22	O
	#23	S
	#24	S
	#25	O
	#26	O
Component Cool Heat Exch	#21	O
	#22	O
RHR Heat Exchanger	#21	O
	#22	O
Hydrogen Recombiner	#21	S
	#22	S
VC Isol. Phase A Complete (Y/N)		N
VC Isol. Phase B Complete (Y/N)		Y
VC Isol. Vent. Complete (Y/N)		Y
Exceptions	FCV-1172 & 73 OPEN	
High Head SIS Flow	#21 (GPM)	O
	#22 (GPM)	O
	#23 (GPM)	O
	#24 (GPM)	O
Low Head SIS Flow	#21 (GPM)	980*
	#22 (GPM)	980*
	#23 (GPM)	980*
	#24 (GPM)	980*
Accumulator Level	#21 (%)	O
	#22 (%)	O
	#23 (%)	O
	#24 (%)	O

Legend:
O = Operating
O/S = Out of Service
S = Standby
* = Change on status from previous log

PARAMETER		TIME 14:30
Offsite Power Available	138KV	O/S
	13.8KV	O/S
Emergency D/Gs	#21	O
	#22	O
	#23	O
Gas Turbines	GT-1	O
	GT-2	S
	GT-3	S
SIS Pumps	#21	O/S
	#22	O/S
	#23	O/S
RHR Pumps	#21	S
	#22	O
Charging Pumps	#21	O
	#22	O
	#23	O
Containment Spray Pumps	#21	S
	#22	S
Recirculation Pumps	#21	O/S
	#22	O/S
Component Cooling Pumps	#21	O
	#22	O
	#23	S
Aux Component Cooling Pumps	#21	O
	#22	O
Aux Boiler Feed Pumps	#21	O
	#22	O
	#23	O
Fan Cooler Units	#21	O
	#22	O
	#23	O
	#24	O
	#25	O

PARAMETER		TIME 14:30
Service Water Pumps (Essential Header)	#21	O
	#22	O
	#23	S
	#24	S
	#25	O
	#26	O
Component Cool Heat Exch	#21	O
	#22	O
RHR Heat Exchanger	#21	O
	#22	O
Hydrogen Recombiner	#21	S
	#22	S
VC Isol. Phase A Complete (Y/N)		Y*
VC Isol. Phase B Complete (Y/N)		Y
VC Isol. Vent. Complete (Y/N)		Y
Exceptions	FCV-1173 CLOSED*	
High Head SIS Flow	#21 (GPM)	O
	#22 (GPM)	O
	#23 (GPM)	O
	#24 (GPM)	O
Low Head SIS Flow	#21 (GPM)	1500*
	#22 (GPM)	1500*
	#23 (GPM)	1500*
	#24 (GPM)	1500*
Accumulator Level	#21 (%)	O
	#22 (%)	O
	#23 (%)	O
	#24 (%)	O

Legend:
O = Operating
O/S = Out of Service
S = Standby
* = Change on status from previous log

PARAMETER		TIME 15:00**
Offsite Power Available	138KV	0*
	13.8KV	0*
Emergency D/Gs	#21	S*
	#22	S*
	#23	S*
Gas Turbines	GT-1	S*
	GT-2	S
	GT-3	S
SIS Pumps	#21	0/S
	#22	0/S
	#23	0/S
RHR Pumps	#21	S
	#22	0
Charging Pumps	#21	0
	#22	0
	#23	0
Containment Spray Pumps	#21	S
	#22	S
Recirculation Pumps	#21	0/S
	#22	0/S
Component Cooling Pumps	#21	0
	#22	0
	#23	S
Aux Component Cooling Pumps	#21	0
	#22	0
Aux Boiler Feed Pumps	#21	S*
	#22	S*
	#23	S*
Fan Cooler Units	#21	0
	#22	0
	#23	0
	#24	0
	#25	0

PARAMETER		TIME 15:00**
Service Water Pumps	#21	0
(Essential Header)	#22	0
	#23	S
	#24	S
	#25	0
	#26	0
Component Cool Heat Exch	#21	0
	#22	0
RHR Heat Exchanger	#21	0
	#22	0
Hydrogen Recombiner	#21	S
	#22	S
VC Isol. Phase A Complete (Y/N)		Y
VC Isol. Phase B Complete (Y/N)		Y
VC Isol. Vent. Complete (Y/N)		Y
Exceptions		NONE
High Head SIS Flow	#21 (GPM)	0
	#22 (GPM)	0
	#23 (GPM)	0
	#24 (GPM)	0
Low Head SIS Flow	#21 (GPM)	1500
	#22 (GPM)	1500
	#23 (GPM)	1500
	#24 (GPM)	1500
Accumulator Level	#21 (%)	0
	#22 (%)	0
	#23 (%)	0
	#24 (%)	0

Legend:
- 0 = Operating
- 0/S = Out of Service
- S = Standby
- * = Change on status from previous log

SCENARIO NO. 1988

TIME 08:15	RED	ORANGE	YELLOW	GREEN
SUBCRITICALITY (S)	FR-S.1	FR-S.1	FR-S.2	SAT
COOLING (C)	FR-C.1	FR-C.2	FR-C.3	SAT
HEAT SINK (H)	FR-H.1		FR-H.2 FR-H.3 FR-H.4 FR-H.5	SAT
INTEGRITY (P)	FR-P.1	FR-P.1	FR-P.2	SAT
CONTAINMENT (Z)	FR-Z.1	FR-Z.1 FR-Z.2	FR-Z.3	SAT
INVENTORY (I)			FR-I.1 FR-I.2 FR-I.3	SAT

TIME 10:25	RED	ORANGE	YELLOW	GREEN
SUBCRITICALITY (S)	FR-S.1	FR-S.1	FR-S.2	SAT
CORE COOLING (C)	FR-C.1	FR-C.2	FR-C.3	SAT
HEAT SINK (H)	FR-H.1		FR-H.2 FR-H.3 FR-H.4 FR-H.5	SAT
INTEGRITY (P)	FR-P.1	FR-P.1	FR-P.2	SAT
CONTAINMENT (Z)	FR-Z.1	FR-Z.1 FR-Z.2	FR-Z.3	SAT
INVENTORY (I)			FR-I.1 FR-I.2 FR-I.3	SAT

TIME 10:45	RED	ORANGE	YELLOW	GREEN
SUBCRITICALITY (S)	FR-S.1	FR-S.1	FR-S.2	SAT
CORE COOLING (C)	FR-C.1	FR-C.2	FR-C.3	SAT
HEAT SINK (H)	FR-H.1		FR-H.2 FR-H.3 FR-H.4 FR-H.5	SAT
RITY (P)	FR-P.1	FR-P.1	FR-P.2	SAT
CONTAINMENT (Z)	FR-Z.1	FR-Z.1 FR-Z.2	FR-Z.3	SAT
INVENTORY (I)			FR-I.1 FR-I.2 FR-I.3	SAT

TIME 11:00	RED	ORANGE	YELLOW	GREEN
SUBCRITICALITY (S)	FR-S.1	FR-S.1	FR-S.2	SAT
CORE COOLING (C)	FR-C.1	FR-C.2	FR-C.3	SAT
HEAT SINK (H)	FR-H.1		FR-H.2 FR-H.3 FR-H.4 FR-H.5	SAT
INTEGRITY (P)	FR-P.1	FR-P.1	FR-P.2	SAT
CONTAINMENT (Z)	FR-Z.1	FR-Z.1 FR-Z.2	FR-Z.3	SAT
INVENTORY (I)			FR-I.1 FR-I.2 FR-I.3	SAT

TIME 11:15	RED	ORANGE	YELLOW	GREEN
SUBCRITICALITY (S)	FR-S.1	FR-S.1	FR-S.2	SAT
CORE COOLING (C)	FR-C.1	FR-C.2	FR-C.3	SAT
HEAT SINK (H)	FR-H.1		FR-H.2 FR-H.3 FR-H.4 FR-H.5	SAT
INTEGRITY (P)	FR-P.1	FR-P.1	FR-P.2	SAT
TAINMENT (Z)	FR-Z.1	FR-Z.1 FR-Z.2	FR-Z.3	SAT
TORY (I)			FR-I.1 FR-I.2 FR-I.3	SAT

TIME 11:30	RED	ORANGE	YELLOW	GREEN
SUBCRITICALITY (S)	FR-S.1	FR-S.1	FR-S.2	SAT
CORE COOLING (C)	FR-C.1	FR-C.2	FR-C.3	SAT
HEAT SINK (H)	FR-H.1		FR-H.2 FR-H.3 FR-H.4 FR-H.5	SAT
INTEGRITY (P)	FR-P.1	FR-P.1	FR-P.2	SAT
CONTAINMENT (Z)	FR-Z.1	FR-Z.1 FR-Z.2	FR-Z.3	SAT
INVENTORY (I)			FR-I.1 FR-I.2 FR-I.3	SAT

10-14-88

SCENARIO NO. 1988

TIME 11:45	RED	ORANGE	YELLOW	GREEN
SUBCRITICALITY (S)	FR-S.1	FR-S.1	FR-S.2	SAT
CORE COOLING (C)	FR-C.1	FR-C.2	FR-C.3	SAT
HEAT SINK (H)	FR-H.1		FR-H.2 FR-H.3 FR-H.4 FR-H.5	SAT
INTEGRITY (P)	FR-P.1	FR-P.1	FR-P.2	SAT
CONTAINMENT (Z)	FR-Z.1	FR-Z.1 FR-Z.2	FR-Z.3	SAT
INVENTORY (I)			FR-I.1 FR-I.2 FR-I.3	SAT

TIME 12:00	RED	ORANGE	YELLOW	GREEN
SUBCRITICALITY (S)	FR-S.1	FR-S.1	FR-S.2	SAT
CORE COOLING (C)	FR-C.1	FR-C.2	FR-C.3	SAT
HEAT SINK (H)	FR-H.1		FR-H.2 FR-H.3 FR-H.4 FR-H.5	SAT
INTEGRITY (P)	FR-P.1	FR-P.1	FR-P.2	SAT
CONTAINMENT (Z)	FR-Z.1	FR-Z.1 FR-Z.2	FR-Z.3	SAT
INVENTORY (I)			FR-I-1 FR-I.2 FR-I.3	SAT

TIME 12:15	RED	ORANGE	YELLOW	GREEN
SUBCRITICALITY (S)	FR-S.1	FR-S.1	FR-S.2	SAT
CORE COOLING (C)	FR-C.1	FR-C.2	FR-C.3	SAT
HEAT SINK (H)	FR-H.1		FR-H.2 FR-H.3 FR-H.4 FR-H.5	SAT
INTEGRITY (P)	FR-P.1	FR-P.1	FR-P.2	SAT
CONTAINMENT (Z)	FR-Z.1	FR-Z.1 FR-Z.2	FR-Z.3	SAT
INVENTORY (I)			FR-I.1 FR-I.2 FR-I.3	SAT

TIME 12:30	RED	ORANGE	YELLOW	GREEN
SUBCRITICALITY (S)	FR-S.1	FR-S.1	FR-S.2	SAT
CORE COOLING (C)	FR-C.1	FR-C.2	FR-C.3	SAT
HEAT SINK (H)	FR-H.1		FR-H.2 FR-H.3 FR-H.4 FR-H.5	SAT
INTEGRITY (P)	FR-P.1	FR-P.1	FR-P.2	SAT
CONTAINMENT (Z)	FR-Z.1	FR-Z.1 FR-Z.2	FR-Z.3	SAT
INVENTORY (I)			FR-I.1 FR-I.2 FR-I.3	SAT

TIME 12:45	RED	ORANGE	YELLOW	GREEN
SUBCRITICALITY (S)	FR-S.1	FR-S.1	FR-S.2	SAT
CORE COOLING (C)	FR-C.1	FR-C.2	FR-C.3	SAT
HEAT SINK (H)	FR-H.1		FR-H.2 FR-H.3 FR-H.4 FR-H.5	SAT
INTEGRITY (P)	FR-P.1	FR-P.1	FR-P.2	SAT
CONTAINMENT (Z)	FR-Z.1	FR-Z.1 FR-Z.2	FR-Z.3	SAT
INVENTORY (I)			FR-I.1 FR-I.2 FR-I.3	SAT

TIME 13:00	RED	ORANGE	YELLOW	GREEN
SUBCRITICALITY (S)	FR-S.1	FR-S.1	FR-S.2	SAT
CORE COOLING (C)	FR-C.1	FR-C.2	FR-C.3	SAT
HEAT SINK (H)	FR-H.1		FR-H.2 FR-H.3 FR-H.4 FR-H.5	SAT
INTEGRITY (P)	FR-P.1	FR-P.1	FR-P.2	SAT
CONTAINMENT (Z)	FR-Z.1	FR-Z.1 FR-Z.2	FR-Z.3	SAT
INVENTORY (I)			FR-I.1 FR-I.2 FR-I.3	SAT

10-14-88

SCENARIO NO. 1988

TIME 13:15	RED	ORANGE	YELLOW	GREEN
SUBCRITICALITY (S)	FR-S.1	FR-S.1	FR-S.2	SAT
CORE COOLING (C)	FR-C.1	FR-C.2	FR-C.3	SAT
HEAT SINK (H)	FR-H.1		FR-H.2 FR-H.3 FR-H.4 FR-H.5	SAT
INTEGRITY (P)	FR-P.1	FR-P.1	FR-P.2	SAT
CONTAINMENT (Z)	FR-Z.1	FR-Z.1 FR-Z.2	FR-Z.3	SAT
INVENTORY (I)			FR-I.1 FR-I.2 FR-I.3	SAT

TIME 13:30	RED	ORANGE	YELLOW	GREEN
SUBCRITICALITY (S)	FR-S.1	FR-S.1	FR-S.2	SAT
CORE COOLING (C)	FR-C.1	FR-C.2	FR-C.3	SAT
HEAT SINK (H)	FR-H.1		FR-H.2 FR-H.3 FR-H.4 FR-H.5	SAT
INTEGRITY (P)	FR-P.1	FR-P.1	FR-P.2	SAT
CONTAINMENT (Z)	FR-Z.1	FR-Z.1 FR-Z.2	FR-Z.3	SAT
INVENTORY (I)			FR-I.1 FR-I.2 FR-I.3	SAT

TIME 13:45	RED	ORANGE	YELLOW	GREEN
SUBCRITICALITY (S)	FR-S.1	FR-S.1	FR-S.2	SAT
CORE COOLING (C)	FR-C.1	FR-C.2	FR-C.3	SAT
HEAT SINK (H)	FR-H.1		FR-H.2 FR-H.3 FR-H.4 FR-H.5	SAT
INTEGRITY (P)	FR-P.1	FR-P.1	FR-P.2	SAT
CONTAINMENT (Z)	FR-Z.1	FR-Z.1 FR-Z.2	FR-Z.3	SAT
INVENTORY (I)			FR-I.1 FR-I.2 FR-I.3	SAT

TIME 14:00	RED	ORANGE	YELLOW	GREEN
SUBCRITICALITY (S)	FR-S.1	FR-S.1	FR-S.2	SAT
CORE COOLING (C)	FR-C.1	FR-C.2	FR-C.3	SAT
HEAT SINK (H)	FR-H.1		FR-H.2 FR-H.3 FR-H.4 FR-H.5	SAT
INTEGRITY (P)	FR-P.1	FR-P.1	FR-P.2	SAT
CONTAINMENT (Z)	FR-Z.1	FR-Z.1 FR-Z.2	FR-Z.3	SAT
INVENTORY (I)			FR-I.1 FR-I.2 FR-I.3	SAT

TIME 14:15	RED	ORANGE	YELLOW	GREEN
SUBCRITICALITY (S)	FR-S.1	FR-S.1	FR-S.2	SAT
CORE COOLING (C)	FR-C.1	FR-C.2	FR-C.3	SAT
HEAT SINK (H)	FR-H.1		FR-H.2 FR-H.3 FR-H.4 FR-H.5	SAT
INTEGRITY (P)	FR-P.1	FR-P.1	FR-P.2	SAT
CONTAINMENT (Z)	FR-Z.1	FR-Z.1 FR-Z.2	FR-Z.3	SAT
INVENTORY (I)			FR-I.1 FR-I.2 FR-I.3	SAT

TIME 14:30	RED	ORANGE	YELLOW	GREEN
SUBCRITICALITY (S)	FR-S.1	FR-S.1	FR-S.2	SAT
CORE COOLING (C)	FR-C.1	FR-C.2	FR-C.3	SAT
HEAT SINK (H)	FR-H.1		FR-H.2 FR-H.3 FR-H.4 FR-H.5	SAT
INTEGRITY (P)	FR-P.1	FR-P.1	FR-P.2	SAT
CONTAINMENT (Z)	FR-Z.1	FR-Z.1 FR-Z.2	FR-Z.3	SAT
INVENTORY (I)			FR-I.1 FR-I.2 FR-I.3	SAT

10-14-88

SCENARIO No. 1988

TIME 14:45	RED	ORANGE	YELLOW	GREEN
SUBCRITICALITY (S)	FR-S.1	FR-S.1	FR-S.2	SAT
CORE COOLING (C)	FR-C.1	FR-C.2	FR-C.3	SAT
HEAT SINK (H)	FR-H.1		FR-H.2 FR-H.3 FR-H.4 FR-H.5	SAT
INTEGRITY (P)	FR-P.1	FR-P.1	FR-P.2	SAT
CONTAINMENT (Z)	FR-Z.1	FR-Z.1 FR-Z.2	FR-Z.3	SAT
INVENTORY (I)			FR-I.1 FR-I.2 FR-I.3	SAT

TIME 15:00	RED	ORANGE	YELLOW	GREEN
SUBCRITICALITY (S)	FR-S.1	FR-S.1	FR-S.2	SAT
CORE COOLING (C)	FR-C.1	FR-C.2	FR-C.3	SAT
HEAT SINK (H)	FR-H.1		FR-H.2 FR-H.3 FR-H.4 FR-H.5	SAT
INTEGRITY (P)	FR-P.1	FR-P.1	FR-P.2	SAT
CONTAINMENT (Z)	FR-Z.1	FR-Z.1 FR-Z.2	FR-Z.3	SAT
INVENTORY (I)			FR-I.1 FR-I.2 FR-I.3	SAT

TIME 15:15	RED	ORANGE	YELLOW	GREEN
SUBCRITICALITY (S)	FR-S.1	FR-S.1	FR-S.2	SAT
CORE COOLING (C)	FR-C.1	FR-C.2	FR-C.3	SAT
HEAT SINK (H)	FR-H.1		FR-H.2 FR-H.3 FR-H.4 FR-H.5	SAT
INTEGRITY (P)	FR-P.1	FR-P.1	FR-P.2	SAT
CONTAINMENT (Z)	FR-Z.1	FR-Z.1 FR-Z.2	FR-Z.3	SAT
INVENTORY (I)			FR-I.1 FR-I.2 FR-I.3	SAT

TIME 15:30	RED	ORANGE	YELLOW	GREEN
SUBCRITICALITY (S)	FR-S.1	FR-S.1	FR-S.2	SAT
CORE COOLING (C)	FR-C.1	FR-C.2	FR-C.3	SAT
HEAT SINK (H)	FR-H.1		FR-H.2 FR-H.3 FR-H.4 FR-H.5	SAT
INTEGRITY (P)	FR-P.1	FR-P.1	FR-P.2	SAT
CONTAINMENT (Z)	FR-Z.1	FR-Z.1 FR-Z.2	FR-Z.3	SAT
INVENTORY (I)			FR-I.1 FR-I.2 FR-I.3	SAT

TIME 15:45	RED	ORANGE	YELLOW	GREEN
SUBCRITICALITY (S)	FR-S.1	FR-S.1	FR-S.2	SAT
CORE COOLING (C)	FR-C.1	FR-C.2	FR-C.3	SAT
HEAT SINK (H)	FR-H.1		FR-H.2 FR-H.3 FR-H.4 FR-H.5	SAT
INTEGRITY (P)	FR-P.1	FR-P.1	FR-P.2	SAT
CONTAINMENT (Z)	FR-Z.1	FR-Z.1 FR-Z.2	FR-Z.3	SAT
INVENTORY (I)			FR-I.1 FR-I.2 FR-I.3	SAT

TIME 16:00	RED	ORANGE	YELLOW	GREEN
SUBCRITICALITY (S)	FR-S.1	FR-S.1	FR-S.2	SAT
CORE COOLING (C)	FR-C.1	FR-C.2	FR-C.3	SAT
HEAT SINK (H)	FR-H.1		FR-H.2 FR-H.3 FR-H.4 FR-H.5	SAT
INTEGRITY (P)	FR-P.1	FR-P.1	FR-P.2	SAT
CONTAINMENT (Z)	FR-Z.1	FR-Z.1 FR-Z.2	FR-Z.3	SAT
INVENTORY (I)			FR-I.1 FR-I.2 FR-I.3	SAT

10-14-88

RADIOLOGICAL/METEOROLOGICAL LOG SCENARIO NO. 1988

PARAMETER TIME	07:30	07:45	08:05	08:20	08:21	08:25	08:30
R-1 CCR mR/hr	0.1	0.1	0.1	0.1	0.1	0.1	0.1
R-2 VC 80' mR/hr	1	1	1	1	1	2	5
R-4 Chrg. Pump mR/hr	1	2	2	2	2	4	6
R-5 F.S.B. mR/hr	0.2	0.2	0.2	0.2	0.2	0.2	0.2
R-6 Sample Rm mR/hr	2	2	6	6	6	6	6
R-7 VC Seal Table mR/hr	5	5	5	5	5	10	15
R-8 Drum Sta. mR/hr	0.5	0.5	0.5	0.5	0.5	1.0	1.0
R-10 Stm Line Penet R/hr	<0.01	<0.01	<0.01	<0.01	<0.01	<0.01	<0.01
R-11 VC Part CPM	1125	1125	1125	1125	1125	1250	1400
R-12 VC Gas CPM	800	800	800	800	800	850	870
R-13 Vent Part CPM	1180	1180	1180	1180	1180	1180	1180
R-14 Vent Gas CPM	1200	1200	1200	1200	1200	1200	1200
R-15 Air Ejector CPM	200	200	200	200	200	200	200
R-16 F.C. Water CPM	1,300	1,300	1,300	1,300	1,300	1,300	1,300
R-17 Comp. Cool CPM	500	500	500	500	500	500	500
R-18 Liquid Waste CPM	6,000	6,000	6,000	6,000	6,000	6,000	6,000
R-19 S/G B.D. CPM	500	500	500	500	500	500	500
R-23 F.C. Water CPM	19,000	19,000	19,000	19,000	19,000	19,000	19,000
R-25 VC Hi-Rge R/hr	<1	<1	<1	<1	<1	<1	<1
R-26 VC Hi-Rge R/hr	<1	<1	<1	<1	<1	<1	<1
R-27 Vent Monitor uCi/cc	0	0	0	0	0	0	0
R-27 Vent Flow Rate CFM	4.5E4	4.5E4	4.5E4	4.5E4	4.5E4	4.5E4	4.5E4
R-27 Vent Dis Rate uCi/sec	0	0	0	0	0	0	0
Main Steam #21 Rad Mon CPM	10	10	10	10	10	10	10
#22	10	10	10	10	10	10	10
#23	10	10	10	10	10	10	10
#24	10	10	10	10	10	10	10
Vent Flow Rate CFM	-	-	-	-	-	-	-
Main Steam Exh Lbs/Hr	0	0	0	0	0	0	0
Air Ejector CFM (measured value)	-	-	-	-	-	-	-
METEOROLOGICAL							
Wind Speed (meters/sec)	1.8	1.8	1.8	1.8	1.8	1.8	1.8
Wind Direction (degrees)	045	045	045	045	045	045	045
Pasquill Stability Category	C	C	C	C	C	C	C

RADIOLOGICAL/METEOROLOGICAL LOG SCENARIO NO. 1988

PARAMETER TIME	08:45	09:00	09:15	09:30	09:45	10:00	10:15
R-1 CCR mR/hr	0.1	0.1	0.1	0.1	0.1	0.1	0.1
R-2 VC 80' mR/hr	7	8	8	8	8	8	8
R-4 Chrg. Pump mR/hr	8	9	9	9	9	9	9
R-5 F.S.B. mR/hr	0.2	0.2	0.2	0.2	0.2	0.2	0.2
R-6 Sample Rm mR/hr	6	12	12	12	12	12	12
R-7 VC Seal Table mR/hr	20	20	20	20	20	20	20
R-8 Drum Sta. mR/hr	1	1	1	1	1	1	1
R-10 Stm Line Penet R/hr	<0.01	<0.01	<0.01	<0.01	<0.01	<0.01	<0.01
R-11 VC Part CPM	1750	1800	1800	1800	1800	1800	1800
R-12 VC Gas CPM	1125	1150	1150	1150	1150	1150	1150
R-13 Vent Part CPM	1180	1180	1180	1180	1180	1180	1180
R-14 Vent Gas CPM	1200	1200	1200	1200	1200	1200	1200
R-15 Air Ejector CPM	200	200	200	200	200	200	200
R-16 F.C. Water CPM	13,000	13,000	13,000	13,000	13,000	13,000	13,000
R-17 Comp. Cool CPM	500	400	400	400	400	400	400
R-18 Liquid Waste CPM	6,000	6,000	6,000	6,000	6,000	6,000	6,000
R-19 S/G B.D. CPM	500	500	500	500	500	500	500
R-23 F.C. Water CPM	19,000	19,000	19,000	19,000	19,000	19,000	19,000
R-25 VC Hi-Rge R/hr	<1	<1	<1	<1	<1	<1	<1
R-26 VC Hi-Rge R/hr	<1	<1	<1	<1	<1	<1	<1
R-27 Vent Monitor uCi/cc	0	0	0	0	0	0	0
R-27 Vent Flow Rate CFM	4.5E4	4.5E4	4.5E4	4.5E4	4.5E4	4.5E4	4.5E4
R-27 Vent Dis Rate uCi/sec	0	0	0	0	0	0	0
Main Steam #21 Rad Mon CPM	10	10	10	10	10	10	10
#22	10	10	10	10	10	10	10
#23	10	10	10	10	10	10	10
#24	10	10	10	10	10	10	10
Vent Flow Rate CFM	-	-	-	-	-	-	-
Main Steam Exh Lbs/Hr	0	0	0	0	0	0	0
Air Ejector CFM (measured value)	-	-	-	-	-	-	-
METEOROLOGICAL							
Wind Speed (meters/sec)	1.8	1.8	1.8	1.8	1.8	2.7	2.7
Wind Direction (degrees)	045	045	040	040	040	040	040
Pasquill Stability Category	C	C	C	C	C	C	C

RADIOLOGICAL/METEOROLOGICAL LOG SCENARIO NO. 1988

PARAMETER TIME	10:20	1020:30	1021:30	10:22	10:25	10:30	10:45
R-1 CCR mR/hr	0.1	0.1	0.1	0.1	0.1	0.1	0.1
R-2 VC 80' mR/hr	8	100	110	200	300	400	500
R-4 Chrg. Pump mR/hr	9	9	9	8	8	8	8
R-5 F.S.B. mR/hr	0.2	0.2	0.2	0.2	0.2	0.2	0.2
R-6 Sample Rm mR/hr	12	12	12	12	12	12	12
R-7 VC Seal Table mR/hr	20	95	100	150	200	300	400
R-8 Drum Sta. mR/hr	1	1	1	1	1	1	1
R-10 Stm Line Penet R/hr	<0.01	<0.01	<0.01	<0.01	<0.01	<0.01	<0.01
R-11 VC Part CPM	1800	140,000	140,000	140,000	140,000	140,000	140,000
R-12 VC Gas CPM	1150	200,000	200,000	200,000	200,000	200,000	200,000
R-13 Vent Part CPM	1180	1180	1180	1180	1180	1180	1180
R-14 Vent Gas CPM	1200	1200	1200	1200	1200	1200	1200
R-15 Air Ejector CPM	200	200	200	200	200	200	200
R-16 F.C. Water CPM	13,000	13,000	13,000	13,000	13,000	13,000	13,000
R-17 Comp. Cool CPM	500	400	400	400	400	400	400
R-18 Liquid Waste CPM	6,000	6,000	6,000	6,000	6,000	6,000	6,000
R-19 S/G B.D. CPM	500	500	500	500	500	500	500
R-23 F.C. Water CPM	19,000	19,000	19,000	19,000	19,000	19,000	19,000
R-25 VC Hi-Rge R/hr	<1	<1	<1	<1	<1	<1	<1
R-26 VC Hi-Rge R/hr	<1	<1	<1	<1	<1	<1	<1
R-27 Vent Monitor uCi/cc	0	0	0	0	0	0	0
R-27 Vent Flow Rate CFM	4.5E4	4.5E4	4.5E4	4.5E4	4.5E4	4.5E4	4.5E4
R-27 Vent Dis Rate uCi/sec	0	0	0	0	0	0	0
Main Steam #21 Rad Mon CPM	10	10	10	10	10	10	10
#22	10	10	10	10	10	10	10
#23	10	10	10	10	10	10	10
#24	10	10	10	10	10	10	10
Vent Flow Rate CFM	-	-	-	-	-	-	-
Main Steam Exh Lbs/Hr	0	0	0	0	0	0	0
Air Ejector CFM (measured value)	-	-	-	-	-	-	-
METEOROLOGICAL							
Wind Speed (meters/sec)	1.8	1.8	1.8	1.8	1.8	2.7	3.6
Wind Direction (degrees)	035	035	30	30	30	30	30
Pasquill Stability Category	C	C	C	C	C	C	C

RADIOLOGICAL/METEOROLOGICAL LOG SCENARIO NO. 1988

PARAMETER TIME	11:00	11:15	11:30	11:45	11:50	11:55	12:00
R-1 CCR mR/hr	0.1	0.1	0.1	0.1	0.1	0.1	0.1
R-2 VC 80' mR/hr	1000	4000	OFFSCALE	OFFSCALE	OFFSCALE	OFFSCALE	OFFSCALE
R-4 Chrg. Pump mR/hr	8	8	8	8	8	8	8
R-5 F.S.B. mR/hr	0.2	0.2	0.2	0.2	0.2	0.2	0.4
R-6 Sample Rm mR/hr	12	12	12	12	12	12	12
R-7 VC Seal Table mR/hr	800	3000	OFFSCALE	OFFSCALE	OFFSCALE	OFFSCALE	OFFSCALE
R-8 Drum Sta. mR/hr	1	1	1	1	1	1	1
R-10 Stm Line Penet R/hr	0.01	0.01	0.01	0.02	0.02	0.03	0.03
R-11 VC Part CPM	140,000	140,000	140,000	140,000	140,000	140,000	140,000
R-12 VC Gas CPM	200,000	200,000	200,000	200,000	200,000	200,000	200,000
R-13 Vent Part CPM	1180	1180	1180	1180	1180	1180	1180
R-14 Vent Gas CPM	1200	1200	1200	1200	1200	1200	1200
R-15 Air Ejector CPM	200	200	200	200	200	200	200
R-16 F.C. Water CPM	13,000	13,000	13,000	13,000	13,000	13,000	13,000
R-17 Comp. Cool CPM	500	400	400	400	400	400	400
R-18 Liquid Waste CPM	6,000	6,000	6,000	6,000	6,000	6,000	6,000
R-19 S/G B.D. CPM	500	500	500	500	500	500	500
R-23 F.C. Water CPM	19,000	19,000	19,000	19,000	19,000	19,000	19,000
R-25 VC Hi-Rge R/hr	<1	5	50	70	90	110	150
R-26 VC Hi-Rge R/hr	<1	7	60	80	105	130	180
R-27 Vent Monitor uCi/cc	0	0	0	0	0	0	0
R-27 Vent Flow Rate CFM	4.5E4	4.5E4	4.5E4	4.5E4	4.5E4	4.5E4	4.5E4
R-27 Vent Dis Rate uCi/sec	0	0	0	0	0	0	0
Main Steam #21 Rad Mon CPM	10	10	10	10	10	10	10
#22	10	10	10	10	10	10	10
#23	10	10	10	10	10	10	10
#24	10	10	10	10	10	10	10
Vent Flow Rate CFM	-	-	-	-	-	-	-
Main Steam Exh Lbs/Hr	0	0	0	0	0	0	0
Air Ejector CFM (measured value)	-	-	-	-	-	-	-
METEOROLOGICAL							
Wind Speed (meters/sec)	3.6	3.6	3.6	3.6	3.6	3.6	4.5
Wind Direction (degrees)	30	30	30	30	30	30	30
Pasquill Stability Category	C	C	C	C	C	C	C

RADIOLOGICAL/METEOROLOGICAL LOG SCENARIO NO. 1988

PARAMETER TIME	12:01	12:15	12:30	12:45	13:00	13:15	13:30
R-1 CCR mR/hr	0.1	0.1	0.1	0.1	0.1	0.1	0.1
R-2 VC 80' mR/hr	OFFSCALE	OFFSCALE	OFFSCALE	OFFSCALE	OFFSCALE	OFFSCALE	OFFSCALE
R-4 Chrg. Pump mR/hr	8	30	35	40	40	40	40
R-5 F.S.B. mR/hr	1	1	1	1	30	40	50
R-6 Sample Rm mR/hr	12	12	12	12	12	12	12
R-7 VC Seal Table mR/hr	OFFSCALE	OFFSCALE	OFFSCALE	OFFSCALE	OFFSCALE	OFFSCALE	OFFSCALE
R-8 Drum Sta. mR/hr	1	1	1	1	1	1	1
R-10 Stm Line Penet R/hr	0.35	0.6	0.6	0.6	0.6	0.6	0.6
R-11 VC Part CPM	140,000	140,000	140,000	140,000	140,000	140,000	140,000
R-12 VC Gas CPM	200,000	200,000	200,000	200,000	200,000	200,000	200,000
R-13 Vent Part CPM	1180	1180	1180	1180	OFFSCALE	OFFSCALE	OFFSCALE
R-14 Vent Gas CPM	1200	1200	1200	1200	OFFSCALE	OFFSCALE	OFFSCALE
R-15 Air Ejector CPM	200	200	200	200	200	200	200
R-16 F.C. Water CPM	13,000	13,000	13,000	13,000	13,000	13,000	13,000
R-17 Comp. Cool CPM	500	400	400	400	400	400	400
R-18 Liquid Waste CPM	6,000	6,000	6,000	6,000	6,000	6,000	6,000
R-19 S/G B.D. CPM	500	500	500	500	500	500	500
R-23 F.C. Water CPM	19,000	19,000	19,000	19,000	19,000	19,000	19,000
R-25 VC Hi-Rge R/hr	160	600	850	950	1,200	2,500	7,300
R-26 VC Hi-Rge R/hr	190	700	950	1,050	1,400	2,800	8,500
R-27 Vent Monitor uCi/cc	0	0	0	0	5.7E0	5.7E0	5.7E0
R-27 Vent Flow Rate CFM	4.5E4	4.5E4	4.5E4	4.5E4	4.5E4	4.5E4	4.5E4
R-27 Vent Dis Rate uCi/sec	0	0	0	0	1.2E8	1.2E8	1.2E8
Main Steam #21 Rad Mon CPM	10	10	10	10	10	10	10
#22	10	10	10	10	10	10	10
#23	10	10	10	10	10	10	10
#24	10	10	10	10	10	10	10
Vent Flow Rate CFM	-	-	-	-	-	-	-
Main Steam Exh Lbs/Hr	0	0	0	0	0	0	0
Air Ejector CFM (measured value)	-	-	-	-	-	-	-
METEOROLOGICAL							
Wind Speed (meters/sec)	4.5	4.5	4.5	4.5	4.5	4.5	4.5
Wind Direction (degrees)	30	30	30	30	30	30	30
Pasquill Stability Category	C	C	C	C	C	C	C

RADIOLOGICAL/METEOROLOGICAL LOG SCENARIO NO. 1988

PARAMETER TIME	13:45	14:00	14:15	14:30	14:45	15:00**
R-1 CCR mR/hr	0.1	0.1	0.1	0.1	0.1	0.1
R-2 VC 80' mR/hr	OFFSCALE	OFFSCALE	OFFSCALE	OFFSCALE	OFFSCALE	OFFSCALE
R-4 Chrg. Pump mR/hr	40	40	40	40	40	25
R-5 F.S.B. mR/hr	50	50	50	45	40	3
R-6 Sample Rm mR/hr	12	12	12	12	12	8
R-7 VC Seal Table mR/hr	OFFSCALE	OFFSCALE	OFFSCALE	OFFSCALE	OFFSCALE	OFFSCALE
R-8 Drum Sta. mR/hr	1	1	1	1	1	1
R-10 Stm Line Penet R/hr	0.35	0.6	0.6	0.6	0.6	<0.01
R-11 VC Part CPM	130,000	130,000	130,000	130,000	130,000	50,000
R-12 VC Gas CPM	180,000	180,000	180,000	180,000	180,000	100,000
R-13 Vent Part CPM	OFFSCALE	OFFSCALE	OFFSCALE	9,000	8,000	750
R-14 Vent Gas CPM	OFFSCALE	OFFSCALE	OFFSCALE	9,000	8,000	1,000
R-15 Air Ejector CPM	200	200	200	200	200	200
R-16 F.C. Water CPM	13,000	13,000	13,000	13,000	13,000	13,000
R-17 Comp. Cool CPM	500	400	400	400	400	400
R-18 Liquid Waste CPM	6,000	6,000	6,000	6,000	6,000	6,000
R-19 S/G B.D. CPM	500	500	500	500	500	500
R-23 F.C. Water CPM	19,000	19,000	19,000	19,000	19,000	19,000
R-25 VC Hi-Rge R/hr	7,300	7,300	7,300	7,300	7,300	50
R-26 VC Hi-Rge R/hr	8,500	8,500	8,500	8,500	8,500	65
R-27 Vent Monitor uCi/cc	5.7E0	5.7E0	5.7E0	0	0	0
R-27 Vent Flow Rate CFM	4.5E4	4.5E4	4.5E4	4.5E4	4.5E4	4.5E4
R-27 Vent Dis Rate uCi/sec	1.2E8	1.2E8	1.2E8	0	0	0
Main Steam #21 Rad Mon CPM	10	10	10	10	10	10
#22	10	10	10	10	10	10
#23	10	10	10	10	10	10
#24	10	10	10	10	10	10
Vent Flow Rate CFM	-	-	-	-	-	-
Main Steam Exh Lbs/Hr	0	0	0	0	0	0
Air Ejector CFM (measured value)	-	-	-	-	-	-
METEOROLOGICAL						
Wind Speed (meters/sec)	4.5	4.5	4.5	4.5	4.5	5.5
Wind Direction (degrees)	30	30	30	30	30	200
Pasquill Stability Category	C	C	C	C	C	C

METEOROLOGICAL FORECAST

General weather conditions during the exercise call for overcast skies but not precipitation. The wind will blow from 30° until at least 1330 hours but the prognosis for the rest of the afternoon indicates the wind possibly shifting to 340°.

The temperatures are expected to go no higher than 35°F.

CONSOLIDATED EDISON COMPANY OF NEW YORK

INDIAN POINT UNIT NO. 2

EXERCISE SCENARIO NO. 1988

VIII. RADIOLOGICAL INFORMATION

TAB A	TABLE 1:	Primary Coolant Activity
TAB B	TABLE 2:	Containment Activity
TAB C	TABLE 3:	Release Path Activity
TAB D	TABLE 4:	Plant/Sample Radiation Levels
TAB E	TABLE 5:	Facility Radiation Levels
TAB F	TABLE 6:	Reuter-Stokes Readings
TAB G	TABLE 7:	Plume Monitoring Data & Figures
TAB H	TABLE 8:	Offsite TLD Readings
TAB I	TABLE 9:	Post Accident Environmental Samples
TAB J	TABLE 10:	Post Accident Offsite Contamination Levels
TAB K	TABLE 11:	Medical Emergency Data

TABLE 1

PRIMARY COOLANT ACTIVITY

Nuclide	08:00 hrs. uCi/ml	09:00 hrs. uCi/ml	10:30 hrs. uCi/ml	12:15 hrs. uCi/ml
I-131	1.1×10^{0}	1.2×10^{0}	1.7×10^{0}	1.0×10^{1}
132	8.4×10^{0}	8.5×10^{0}	1.3×10^{1}	7.9×10^{1}
133	6.1×10^{0}	6.2×10^{0}	9.3×10^{0}	5.7×10^{1}
134	1.4×10^{1}	1.5×10^{1}	2.2×10^{1}	1.2×10^{2}
135	9.2×10^{0}	1.1×10^{1}	1.6×10^{1}	9.2×10^{1}
Xe-133	3.0×10^{1}	3.5×10^{1}	5.0×10^{1}	2.8×10^{2}
133m	2.0×10^{0}	2.3×10^{0}	3.5×10^{0}	1.9×10^{1}
135	5.8×10^{0}	6.7×10^{1}	1.0×10^{2}	4.9×10^{1}
135m	1.9×10^{0}	2.2×10^{0}	3.3×10^{0}	1.8×10^{1}
138	2.7×10^{0}	3.1×10^{0}	4.6×10^{0}	2.7×10^{1}
Kr-85	< LLD	< LLD	< LLD	< LLD
85m	< LLD	< LLD	< LLD	6.1×10^{-1}
87	1.1×10^{0}	1.3×10^{0}	2.0×10^{0}	3.0×10^{1}
88	< LLD	< LLD	< LLD	5.9×10^{-1}
Rb-88	6.3×10^{0}	1.0×10^{1}	1.5×10^{1}	5.1×10^{1}
89	4.1×10^{0}	4.7×10^{0}	7.0×10^{0}	4.8×10^{1}
Te-132	< LLD	< LLD	< LLD	4.7×10^{-1}
Cs-134	< LLD	< LLD	< LLD	4.5×10^{-1}
137	< LLD	< LLD	< LLD	4.6×10^{-1}
138	1.2×10^{1}	1.4×10^{1}	2.2×10^{1}	2.0×10^{2}
Ce-144	< LLD	< LLD	< LLD	9.1×10^{0}
La-140	< LLD	< LLD	< LLD	6.2×10^{-1}
Ba-140	< LLD	< LLD	< LLD	5.0×10^{0}
Total	1.0×10^{2}	1.8×10^{2}	2.7×10^{2}	1.1×10^{3}
EBAR	1.77	1.83	1.85	2.00
Sample mR/hr @				
1 Meter	< 1	1	2	13
Room mR/hr While Sampling	10	15	25	145

LLD = Lower Limit of Detection

TABLE 1

PRIMARY COOLANT ACTIVITY

Nuclide	13:00 hrs. uCi/ml	13:45 hrs. uCi/ml
I-131	1.0×10^{2}	1.0×10^{3}
132	7.9×10^{2}	7.9×10^{3}
133	5.7×10^{2}	5.7×10^{3}
134	1.2×10^{3}	1.2×10^{4}
135	9.2×10^{2}	9.2×10^{3}
Xe-133	2.8×10^{3}	2.8×10^{4}
133m	1.9×10^{2}	1.9×10^{3}
135	4.9×10^{2}	4.9×10^{3}
135m	1.8×10^{2}	1.8×10^{3}
138	2.7×10^{2}	2.7×10^{3}
Kr-85	< LLD	< LLD
85m	6.1×10^{0}	6.1×10^{1}
87	3.0×10^{2}	3.0×10^{3}
88	5.9×10^{0}	5.9×10^{1}
Rb-88	5.1×10^{2}	5.1×10^{3}
89	4.8×10^{2}	4.8×10^{3}
Te-132	4.7×10^{0}	4.7×10^{1}
Cs-134	4.5×10^{0}	4.5×10^{1}
137	4.6×10^{0}	4.6×10^{1}
138	2.0×10^{3}	2.0×10^{4}
Ce-144	9.1×10^{1}	9.1×10^{2}
La-140	6.2×10^{0}	6.2×10^{1}
Ba-140	5.0×10^{1}	5.0×10^{2}
Total	1.1×10^{4}	1.1×10^{5}
EBAR	2.05	2.15
Sample mR/hr @		
1 Meter	130	1100
Room mR/hr While Sampling	1200	5500

LLD = Lower Limit of Detection

TABLE 2

CONTAINMENT ACTIVITY

Nuclide	07:50 hrs uCi/cc	10:20 hrs uCi/cc	11:30 hrs uCi/cc	12:05 hrs uCi/cc	12:20 hrs uCi/cc
Ar-41	1.1×10^{-6}	1.2×10^{-4}	2.5×10^{-2}	1.8×10^{0}	6.0×10^{0}
Kr-85	< LLD	< LLD	1.6×10^{-4}	2.0×10^{-2}	6.5×10^{-2}
85m	< LLD	< LLD	2.0×10^{-1}	2.6×10^{-1}	9.0×10^{-1}
87	< LLD	2.1×10^{-5}	1.0×10^{-1}	8.0×10^{0}	2.7×10^{0}
88	< LLD	2.3×10^{-5}	3.2×10^{-1}	3.2×10^{1}	1.1×10^{2}
89	< LLD	< LLD	1.2×10^{-2}	1.2×10^{0}	4.0×10^{0}
Rb-88	< LLD	< LLD	3.0×10^{-1}	3.2×10^{1}	1.1×10^{2}
89	< LLD	< LLD	2.0×10^{-1}	2.0×10^{1}	6.5×10^{1}
Xe-127	< LLD	< LLD	1.7×10^{-2}	1.6×10^{0}	5.3×10^{0}
131m	< LLD	< LLD	4.5×10^{-3}	5.0×10^{-1}	1.7×10^{0}
133	1.8×10^{-4}	1.9×10^{-2}	6.0×10^{-1}	8.5×10^{0}	2.8×10^{1}
133m	1.2×10^{-6}	1.3×10^{-4}	1.2×10^{-1}	8.0×10^{-1}	2.7×10^{0}
135	3.2×10^{-6}	3.3×10^{-4}	2.0×10^{-1}	2.8×10^{1}	9.0×10^{1}
135m	< LLD	< LLD	1.1×10^{-1}	9.0×10^{0}	3.0×10^{1}
137	< LLD	< LLD	2.0×10^{-2}	1.8×10^{0}	6.0×10^{0}
138	< LLD	< LLD	1.4×10^{-1}	1.2×10^{1}	4.0×10^{1}
TOTAL	1.9×10^{-4}	2.0×10^{-2}	2.4×10^{0}	1.6×10^{2}	5.0×10^{2}
Sample mR/hr @					
Contact	< 1	< 1	1	53	150
1 Ft.	< 1	< 1	< 1	5	15
% H_2	< 0.1	< 0.1	0.2	0.4	0.5
% O_2	21.0	21.0	21.0	21.0	21.0

NOTE 1: LLD = Lower Limit of Detection

NOTE 2: It is expected that the Chemist will go to the location where the Containment Sample is to be drawn. Sampling and counting may be simulated. Twenty minutes after reaching the sample location the Chemist will report the activity given above.

TABLE 2

CONTAINMENT ACTIVITY

Nuclide	12:50 hrs uCi/cc	13:30 hrs uCi/cc
Ar-41	1.8×10^{1}	6.2×10^{1}
Kr-85	2.0×10^{-1}	6.6×10^{-1}
85m	2.6×10^{0}	1.0×10^{1}
87	8.0×10^{1}	2.8×10^{1}
88	3.2×10^{2}	1.2×10^{3}
89	1.2×10^{1}	4.1×10^{1}
Rb-88	3.2×10^{2}	1.2×10^{3}
89	2.0×10^{2}	6.6×10^{2}
Xe-127	1.6×10^{1}	5.4×10^{1}
131m	5.0×10^{0}	1.7×10^{1}
133	8.5×10^{1}	2.8×10^{2}
133m	8.0×10^{0}	2.7×10^{1}
135	2.8×10^{2}	9.5×10^{2}
135m	9.0×10^{1}	3.1×10^{2}
137	1.8×10^{1}	6.1×10^{1}
138	1.2×10^{2}	4.1×10^{2}
TOTAL	1.6×10^{3}	5.3×10^{3}

Sample mR/hr @		
Contact	450	1300
1 Ft.	45	120
% H_2	2.5	4/0.2
% O_2	21.0	21.0

TABLE 3

PLANT VENT ACTIVITY

Nuclide	13:00 hrs uCi/cc	13:20 hrs uCi/cc	13:50 hrs uCi/cc	14:15 hrs uCi/cc	14:30 hrs uCi/cc
			COMPOSITE ZEOLITE		
I-131	3.0×10^{-4}	3.1×10^{-4}	2.2×10^{-4}	7.0×10^{-5}	< LLD
132	3.1×10^{-4}	3.0×10^{-4}	8.0×10^{-5}	3.5×10^{-5}	< LLD
133	3.8×10^{-4}	3.7×10^{-4}	2.5×10^{-4}	1.6×10^{-4}	< LLD
134	2.2×10^{-4}	2.3×10^{-4}	1.0×10^{-5}	------	< LLD
135	3.7×10^{-4}	3.7×10^{-4}	2.5×10^{-4}	1.5×10^{-4}	< LLD
			GRAB		
Ar-41	7.5×10^{-3}	7.6×10^{-3}	7.5×10^{-3}	7.5×10^{-3}	< LLD
Kr-85	1.9×10^{-2}	2.0×10^{-2}	1.9×10^{-2}	1.9×10^{-2}	< LLD
85m	5.9×10^{-1}	6.0×10^{-1}	5.9×10^{-1}	5.9×10^{-1}	< LLD
87	7.4×10^{-1}	7.4×10^{-1}	7.4×10^{-1}	7.4×10^{-1}	< LLD
88	1.4×10^{0}	1.4×10^{0}	1.4×10^{0}	1.4×10^{0}	< LLD
89	2.2×10^{-2}	2.3×10^{-2}	2.2×10^{-2}	2.2×10^{-2}	< LLD
Rb-88	1.3×10^{0}	1.3×10^{0}	1.3×10^{0}	1.3×10^{0}	< LLD
89	2.3×10^{-2}	2.4×10^{-2}	2.3×10^{-2}	2.3×10^{-2}	< LLD
Xe-127	< LLD	< LLD	< LLD	< LLD	< LLD
131m	< LLD	< LLD	< LLD	< LLD	< LLD
133	1.0×10^{0}	1.0×10^{0}	1.0×10^{0}	1.0×10^{0}	< LLD
133m	1.9×10^{-2}	1.9×10^{-2}	1.9×10^{-2}	1.9×10^{-2}	< LLD
135	4.6×10^{-1}	4.6×10^{-1}	4.6×10^{-1}	4.6×10^{-1}	< LLD
135m	2.6×10^{-4}	2.8×10^{-4}	2.7×10^{-4}	2.6×10^{-4}	< LLD
137	2.0×10^{-4}	2.1×10^{-4}	2.1×10^{-4}	2.0×10^{-4}	< LLD
138	3.3×10^{-2}	3.4×10^{-2}	3.4×10^{-2}	3.3×10^{-2}	< LLD
TOTAL	5.6×10^{0}	5.8×10^{0}	5.7×10^{0}	5.6×10^{0}	< LLD
Sample mR/hr @					
Contact	2	2	2	2	< 1
1 Ft.	< 1	< 1	< 1	< 1	< 1

PLANT VENT CONTACT READING

TIME	mR/hr
1300	1.5×10^{4}
1320	1.5×10^{4}
1350	1.5×10^{4}
1415	1.5×10^{4}
1430	2.0×10^{1}

NOTE 1: LLD = Lower Limit of Detection

NOTE 2: Vent contact reading provided to Rad Prot Tech. Chemistry data available 30 minutes after the sample is taken.

PLANT/SAMPLE RADIATION LEVELS

TABLE OF CONTENTS

SUBJECT	PAGE
FAN BUILDING DATA	VIII-D-2
FAN BUILDING PHYSICAL LAYOUT	3
PLANT VENT ALLEY DATA	4
PLANT VENT ALLEY PHYSICAL LAYOUT	5
PAB 80' DATA	6
PAB 80' PHYSICAL LAYOUT	7
PAB 98' DATA	8
PAB 98' PHYSICAL LAYOUT	9
RHR PUMPS, SIS PUMPS, DATA	10
PAB 15' RHR PUMPS PHYSICAL LAYOUT	11
PAB 59' SIS PUMPS PHYSICAL LAYOUT	12
SECURITY FENCE FIELD DATA	13
SECURITY FENCE/ASSEMBLY AREA LAYOUT	14
ASSEMBLY AREA FIELD DATA	15
R-11/12 MEZZ 78', PIPE PENET 51', SG BD ROOM 51' DATA	16
R-11/12 MEZZANINE 78' PHYSICAL LAYOUT	17
PIPING PENETRATION 51' PHYSICAL LAYOUT	18
SG BLOWDOWN ROOM 51' PHYSICAL LAYOUT	19

TABLE 4
PLANT RADIATION LEVELS

LOCATION		TIME	RADIATION LEVELS	
Fan Bldg. -	Point 1	< 11:30	AS READ	mR/hr
		11:30 to 13:00	5	mR/hr
		13:01 to 14:30	2,000	mR/hr
		14:31 to 15:00	300	mR/hr
		> 15:00	25	mR/hr
	Point 2	< 11:30	AS READ	mR/hr
		11:30 to 13:00	5	mR/hr
		13:01 to 14:30	2,500	mR/hr
		14:31 to 15:00	350	mR/hr
		> 15:00	30	mR/hr
	Point 3	< 11:30	AS READ	mR/hr
		11:30 to 13:00	5	mR/hr
		13:01 to 14:30	1,800	mR/hr
		14:31 to 15:00	280	mR/hr
		> 15:00	20	mR/hr
	Point 4	< 11:30	AS READ	mR/hr
		11:30 to 13:00	3	mR/hr
		13:01 to 14:30	700	mR/hr
		14:31 to 15:00	120	mR/hr
		> 15:00	7	mR/hr
	Point 5	< 11:30	AS READ	mR/hr
		11:30 to 13:00	2	mR/hr
		13:01 to 14:30	300	mR/hr
		14:31 to 15:00	35	mR/hr
		> 15:00	3	mR/hr

NOTE 1: All open window (OW) mR/hr readings will be the same as the closed window (CW) mR/hr readings listed above.

NOTE 2: All loose contamination and airborne concentrations are actual levels detected.

NOTE 3: Data to be supplied to Rad Prot Tech at the locations after the survey is performed.

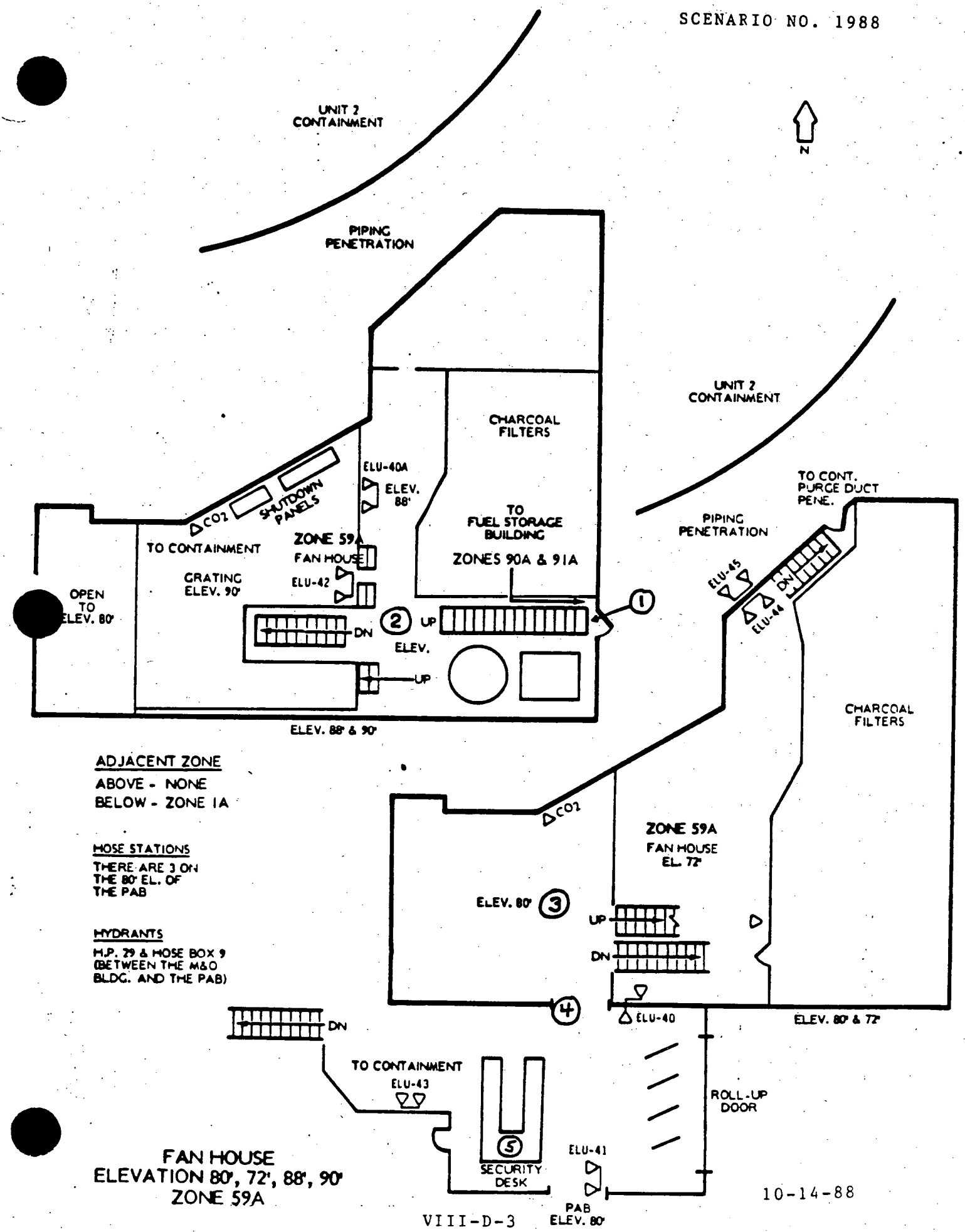

ADJACENT ZONE

ABOVE - NONE
BELOW - ZONE 1A

HOSE STATIONS

THERE ARE 3 ON THE 80' EL. OF THE PAB

HYDRANTS

H.P. 29 & HOSE BOX 9 (BETWEEN THE M&O BLDG. AND THE PAB)

FAN HOUSE
ELEVATION 80', 72', 88', 90'
ZONE 59A

10-14-88

TABLE 4
PLANT RADIATION LEVELS

LOCATION		TIME	RADIATION LEVELS	
Plant Vent - Alley	Point 1	< 12:00	AS READ	mR/hr
		12:01 to 13:00	20	mR/hr
		13:01 to 14:30	15,000	mR/hr
		14:31 to 14:45	2,000	mR/hr
		14:46 to 15:00	1,400	mR/hr
		> 15:00	25	mR/hr
	Point 2	< 12:00	AS READ	mR/hr
		12:01 to 13:00	5	mR/hr
		13:01 to 14:30	3,000	mR/hr
		14:31 to 14:45	400	mR/hr
		14:46 to 15:00	300	mR/hr
		> 15:00	10	mR/hr
	Point 3	< 12:00	AS READ	mR/hr
		12:01 to 13:00	2	mR/hr
		13:01 to 14:30	1,000	mR/hr
		14:31 to 14:45	150	mR/hr
		14:46 to 15:00	125	mR/hr
		> 15:00	5	mR/hr

NOTE 1: All open window (OW) mR/hr readings will be the same as the closed window (CW) mR/hr readings listed above.

NOTE 2: All loose contamination and airborne concentrations are actual levels detected.

NOTE 3: Data to be supplied to Rad Prot Tech at the locations after the survey is performed.

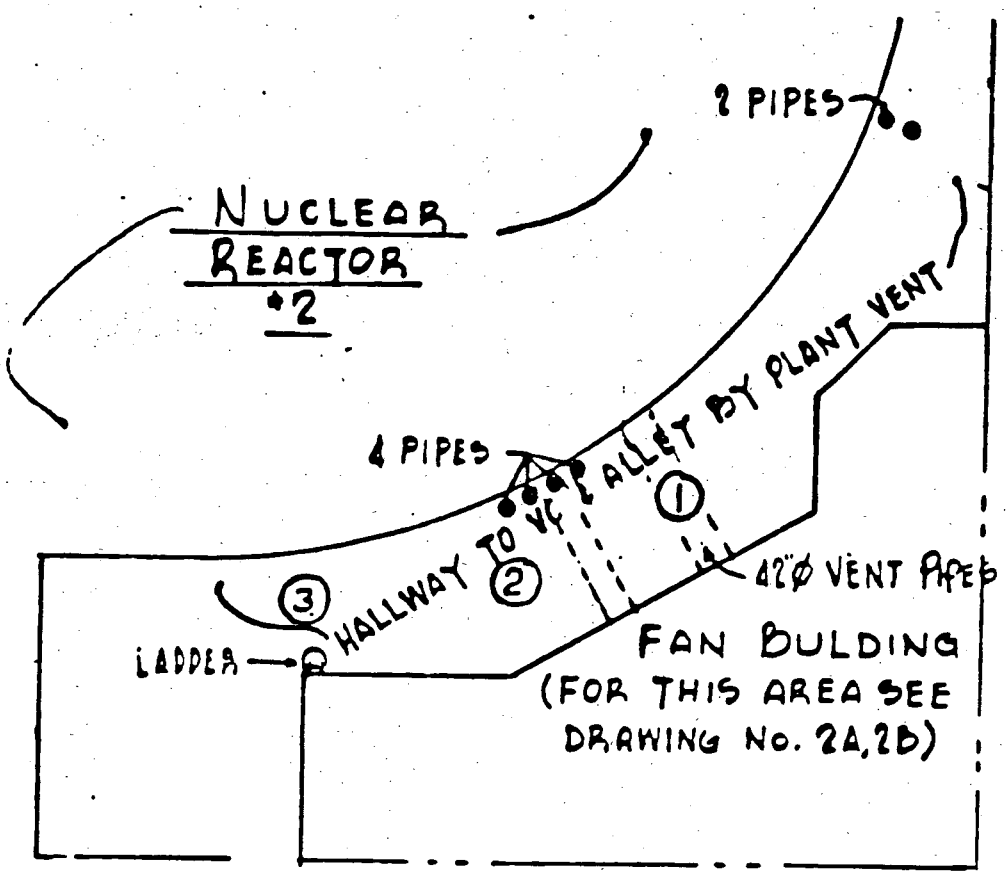

ALLEY BY PLANT VENT

TABLE 4
PLANT RADIATION LEVELS

LOCATION		TIME	RADIATION LEVELS	
80' PAB -	Point 1	< 11:30	AS READ	mR/hr
		11:30 to 13:00	2	mR/hr
		13:01 to 14:30	40	mR/hr
		14:31 to 15:00	15	mR/hr
		> 15:00	3	mR/hr
	Point 2	< 11:30	AS READ	mR/hr
		11:30 to 13:00	3	mR/hr
		13:01 to 14:30	40	mR/hr
		14:31 to 15:00	20	mR/hr
		> 15:00	4	mR/hr
	Point 3	< 11:30	AS READ	mR/hr
		11:30 to 13:00	1	mR/hr
		13:01 to 14:30	25	mR/hr
		14:31 to 15:00	4	mR/hr
		> 15:00	2	mR/hr
	Point 4	< 11:30	AS READ	mR/hr
		11:30 to 13:00	2	mR/hr
		13:01 to 14:30	30	mR/hr
		14:31 to 15:00	15	mR/hr
		> 15:00	3	mR/hr

NOTE 1: All open window (OW) mR/hr readings will be the same as the closed window (CW) mR/hr readings listed above.

NOTE 2: All loose contamination and airborne concentrations are actual levels detected.

NOTE 3: Data to be supplied to Rad Prot Tech at the locations after the survey is performed.

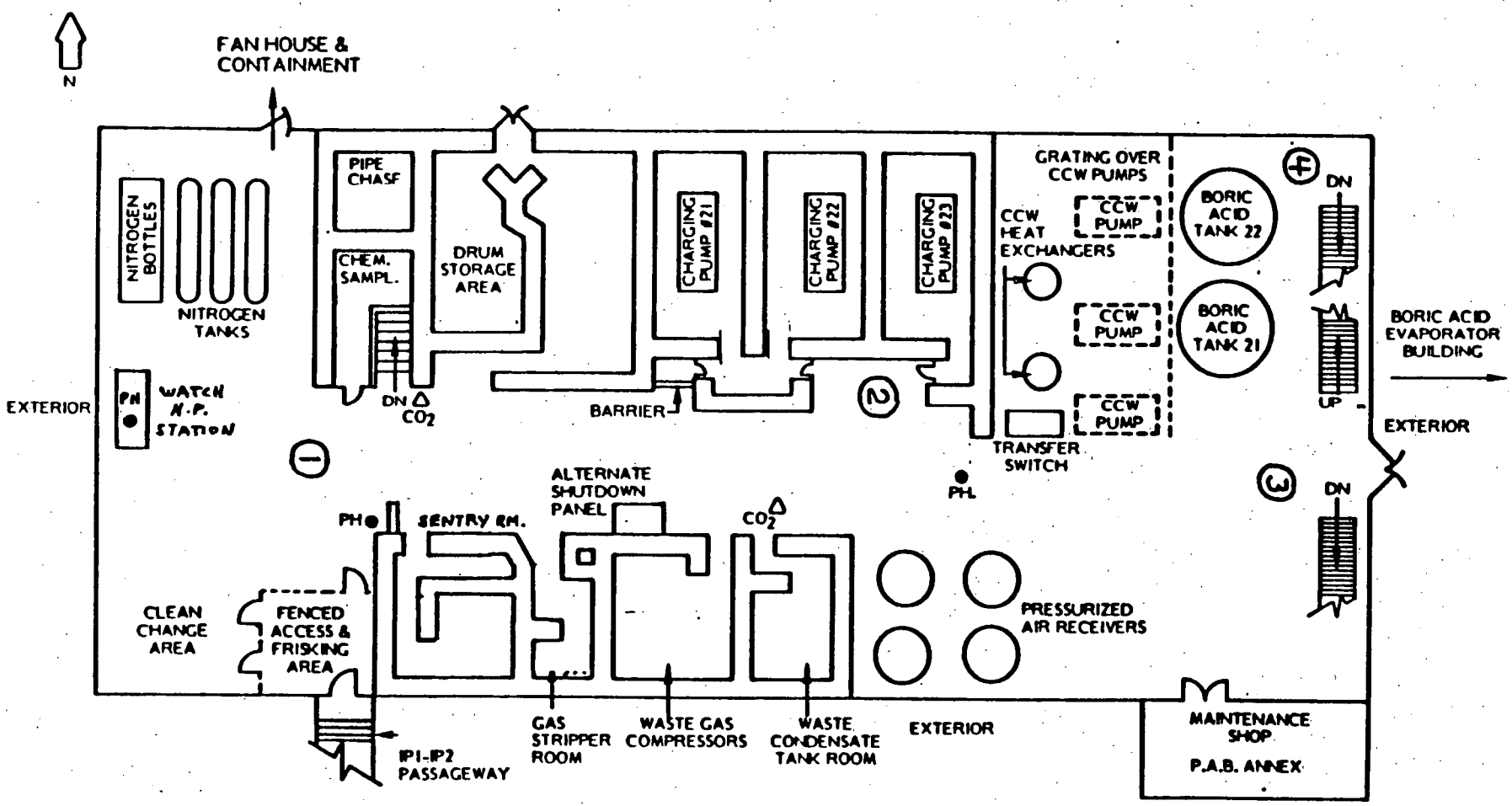

PHONES

WHP 5717

ChemCell 5427

CHG Pump 5427

PRIMARY AUXILIARY BUILDING
ELEVATION 80'

TABLE 4
PLANT RADIATION LEVELS

LOCATION		TIME	RADIATION LEVELS	
98' PAB	- Point 1	< 11:30	AS READ	mR/hr
		11:30 to 13:00	2	mR/hr
		13:01 to 14:30	330	mR/hr
		14:31 to 15:00	20	mR/hr
		> 15:00	8	mR/hr
	Point 2	< 11:30	AS READ	mR/hr
		11:30 to 13:00	3	mR/hr
		13:01 to 14:30	360	mR/hr
		14:31 to 15:00	22	mR/hr
		> 15:00	10	mR/hr
	Point 3	< 11:30	AS READ	mR/hr
		11:30 to 13:00	3	mR/hr
		13:01 to 14:30	360	mR/hr
		14:31 to 15:00	20	mR/hr
		> 15:00	8	mR/hr
	Point 4	< 11:30	AS READ	mR/hr
		11:30 to 13:00	2	mR/hr
		13:01 to 14:30	360	mR/hr
		14:31 to 15:00	20	mR/hr
		> 15:00	7	mR/hr
	Point 5	< 11:30	AS READ	mR/hr
		11:30 to 13:00	2	mR/hr
		13:01 to 14:30	270	mR/hr
		14:31 to 15:00	20	mR/hr
		> 15:00	4	mR/hr
	Point 6	< 11:30	AS READ	mR/hr
		11:30 to 13:00	1	mR/hr
		13:01 to 14:30	210	mR/hr
		14:31 to 15:00	20	mR/hr
		> 15:00	4	mR/hr

NOTE 1: All open window (OW) mR/hr readings will be the same as the closed window (CW) mR/hr readings listed above.

NOTE 2: All loose contamination and airborne concentrations are actual levels detected.

NOTE 3: Data to be supplied to Rad Prot Tech at the locations after the survey is performed.

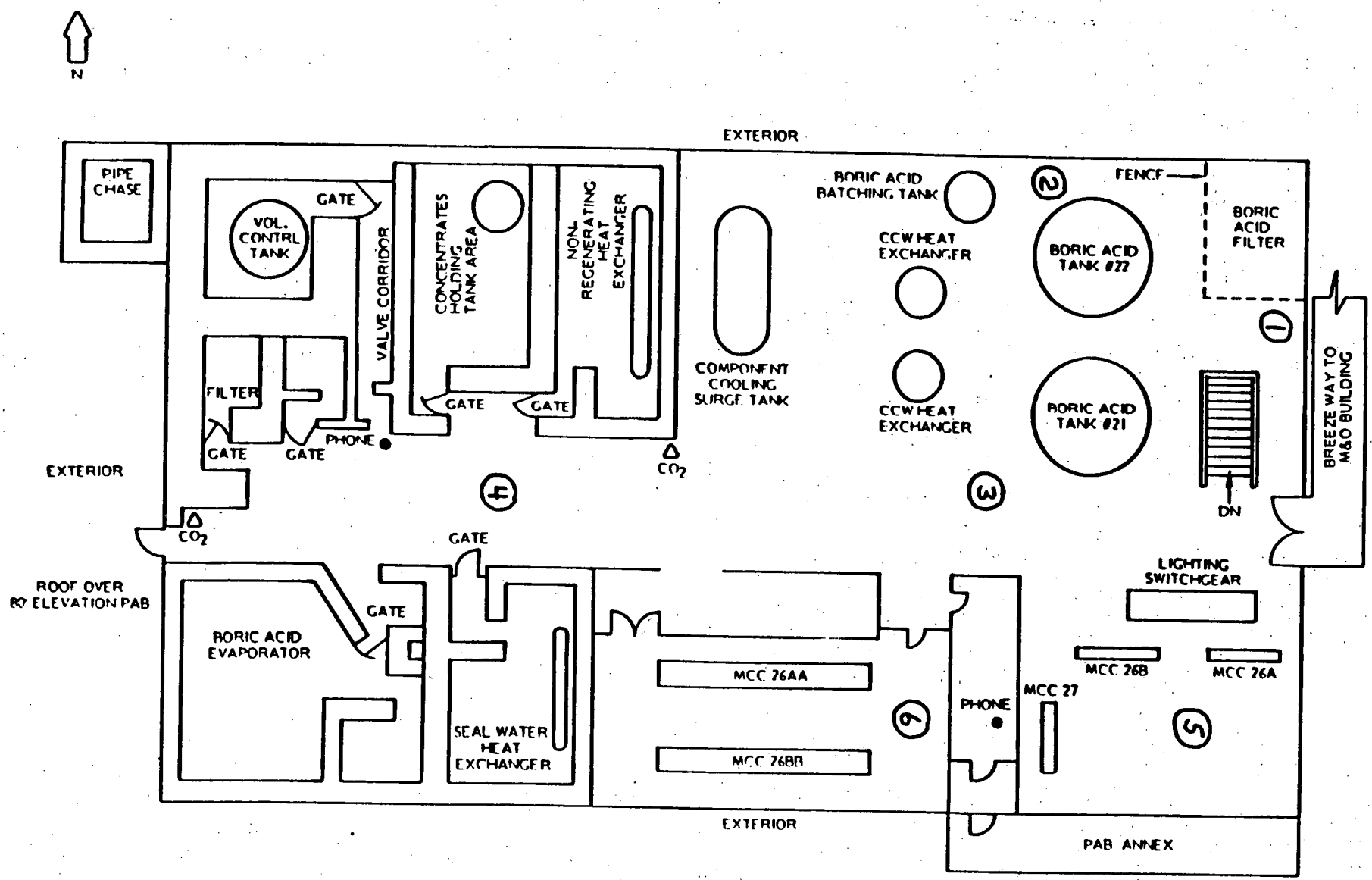

PRIMARY AUXILIARY BUILDING
ELEVATION 98'-0"

TABLE 4
PLANT RADIATION LEVELS

LOCATION	TIME	RADIATION LEVELS NO. 21	RADIATION LEVELS NO. 22	
RHR PUMP ROOMS	< 11:20	300	300	mR/hr
	11:20	500	500	mR/hr
	11:35	700	500	mR/hr
	11:55	1400	500	mR/hr
	12:30	1400	500	mR/hr
	13:30	1400	6000	mR/hr
	14:00	1400	7000	mR/hr
	15:00	1400	8000	mR/hr
PUMP BASE CONTACT VALUE 10 TIMES ROOM VALUE				
SIS PUMP ROOM	ALL TIMES	50		mR/hr

NOTE 1: All open window (OW) mR/hr readings will be the same as the closed window (CW) mR/hr readings listed above.

NOTE 2: All loose contamination and airborne concentrations are actual levels detected.

NOTE 3: Data to be supplied to Rad Prot Tech at the locations after the survey is performed.

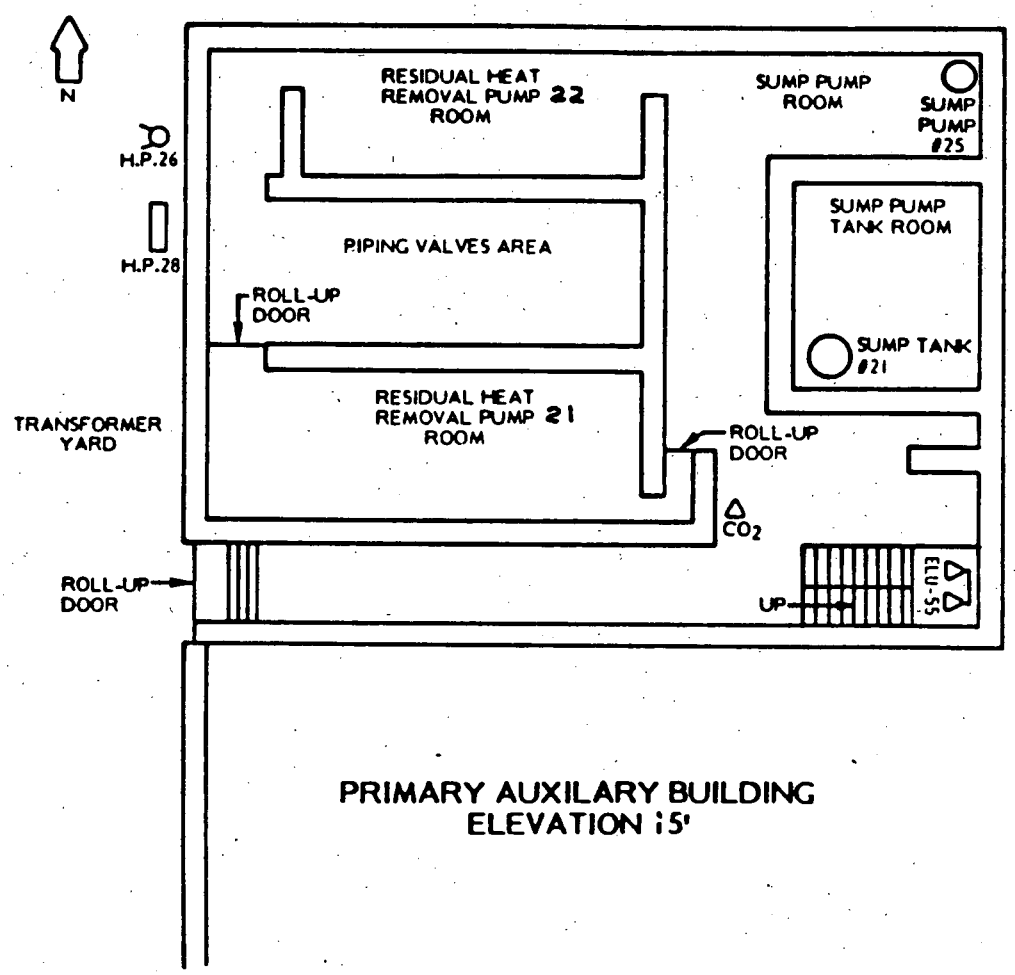

PRIMARY AUXILARY BUILDING
ELEVATION 15'

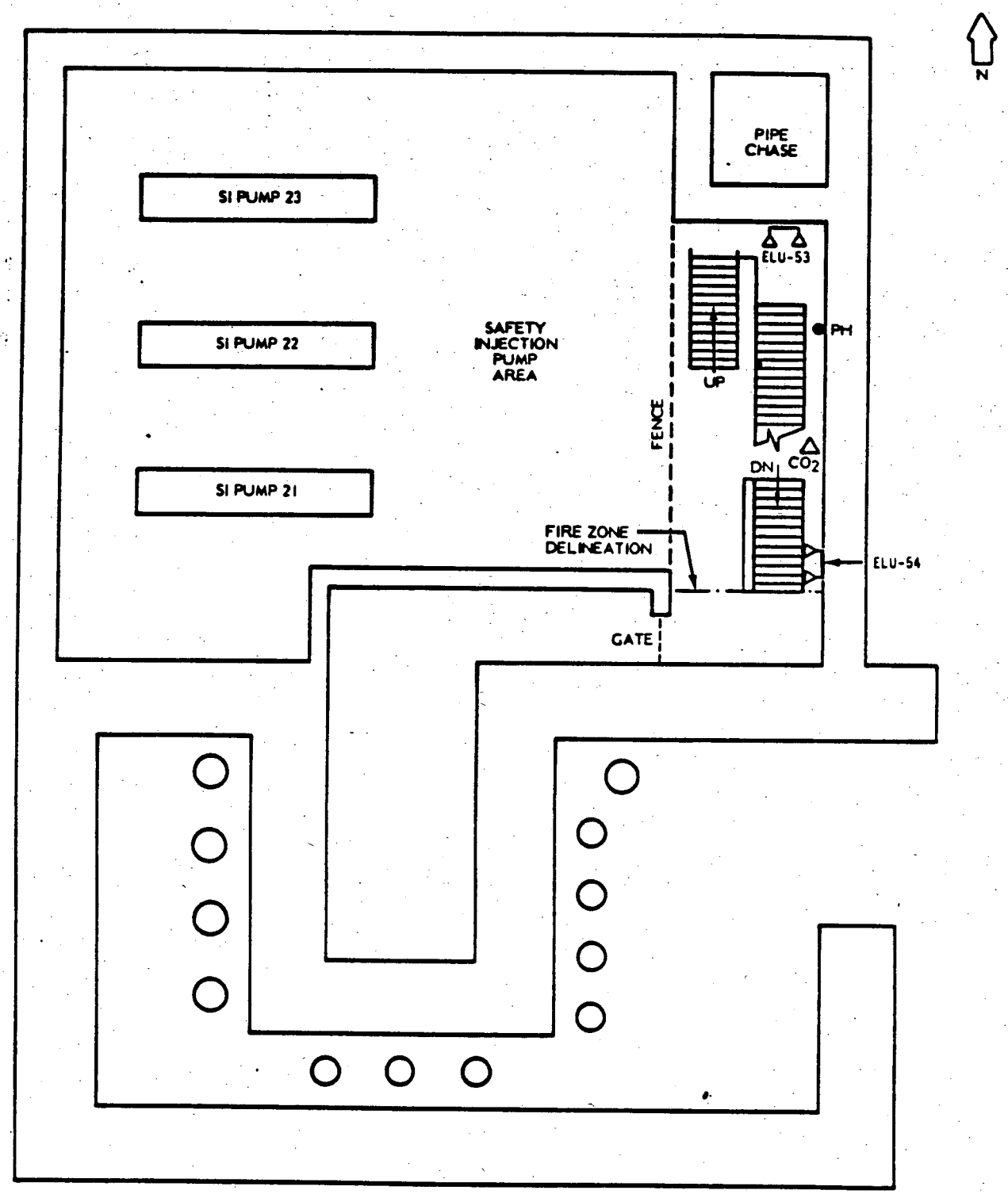

PRIMARY AUXILIARY BUILDING
ELEVATION 59'

TABLE 4

SECURITY FENCE FIELD DATA - MR/HR

TIME	LOCATION POINTS						
	A	B	C	D	E	F	G
<13:00	0	0	0	0	0	0	0
13:00	0	2	150	1300	55	0	0
13:15	0	2	150	1300	55	0	0
13:30	0	2	150	1300	55	0	0
13:45	0	2	150	1300	55	0	0
14:00	0	2	150	1300	55	0	0
14:15	0	2	150	1300	55	0	0
14:30	0	2	150	1300	55	0	0
>14:30	0	0	0	0	0	0	0

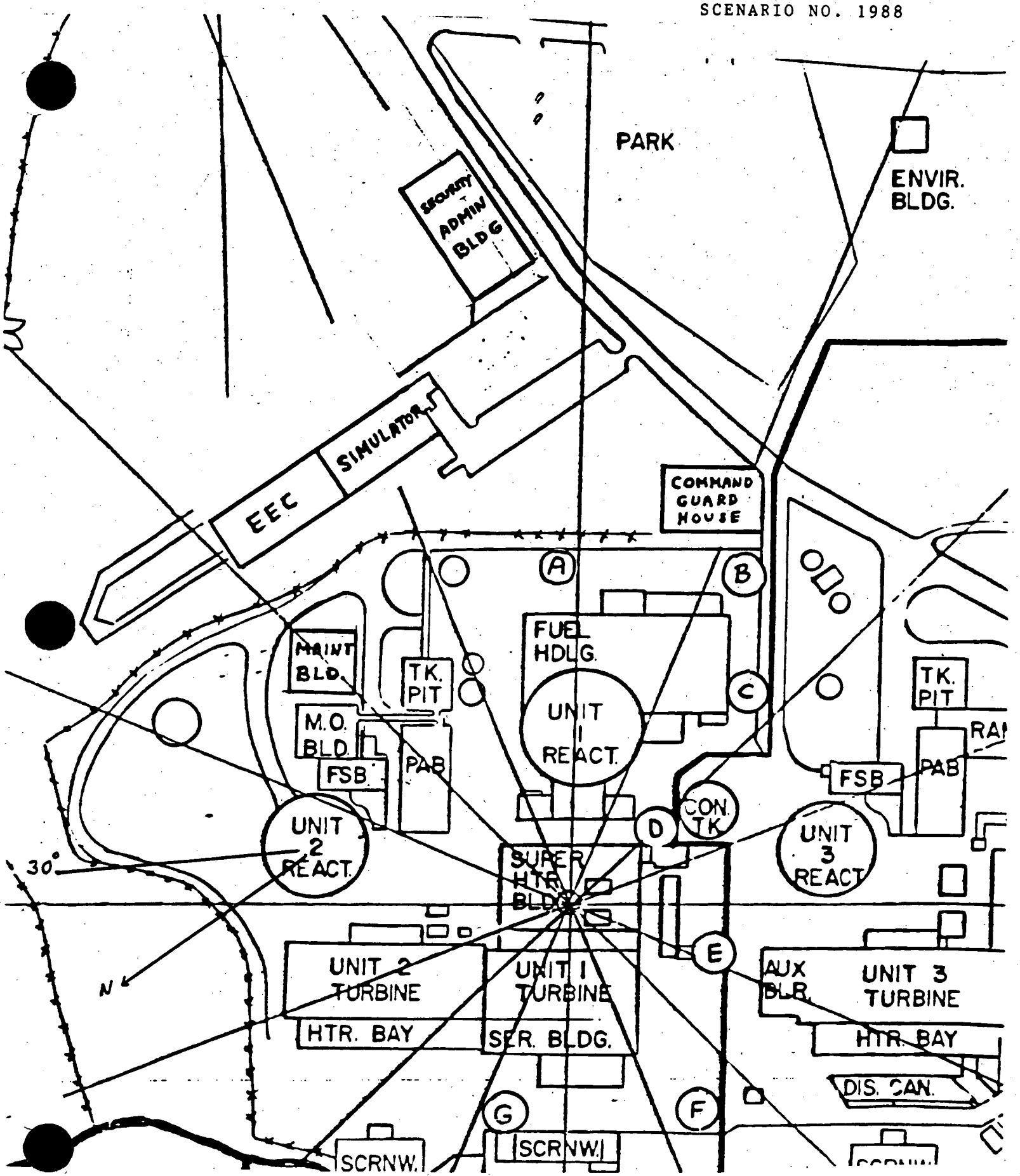
PARK
ENVIR. BLDG.
SECURITY ADMIN BLDG
SIMULATOR
EEC
COMMAND GUARD HOUSE
A
B
C
D
E
F
G
FUEL HDLG.
UNIT 1 REACT.
MAINT BLD.
TK. PIT
M.O. BLD.
FSB
PAB
UNIT 2 REACT.
CON. TK
SUPER HTR. BLDG.
UNIT 3 REACT
TK. PIT
FSB
PAB
30°
N
UNIT 2 TURBINE
HTR. BAY
UNIT 1 TURBINE
SER. BLDG.
AUX BLR.
UNIT 3 TURBINE
HTR. BAY
DIS. CAN.
SCRNW.
SCRNW.

TABLE 4
PLANT RADIATION LEVELS

LOCATION	TIME	RADIATION LEVELS
SIMULATOR/VISITOR CENTER	ALL TIMES	AS READ mR/hr
SECURITY/ADMIN BLDG	ALL TIMES	AS READ mR/hr
ASSEMBLY AREA A-B 15 FT TURBINE BLDG	ALL TIMES	AS READ mR/hr
M.O. BLDG CONST OFFICE COMPLEX	< 13:00	AS READ mR/hr
	13:00	5 mR/hr
	14:30	5 mR/hr
	> 14:30	AS READ mR/hr

NOTE 1: All loose contamination and airborne concentrations are actual levels detected.

NOTE 2: Data to be supplied to Rad Prot Tech at the locations after the survey is performed.

TABLE 4
PLANT RADIATION LEVELS

LOCATION		TIME	RADIATION LEVELS
R-11/12 MEZZ	- Point 1	< 13:30	5 mR/hr
		13:30 to 15:00	330 mR/hr
		> 15:00	40 mR/hr
PIPE PENET	- Point 1	< 13:30	30 mR/hr
		13:30 to 15:00	450 mR/hr
		> 15:00	175 mR/hr
	Point 2	< 13:30	50 mR/hr
		13:30 to 15:00	700 mR/hr
		> 15:00	200 mR/hr
	Point 3	< 13:30	25 mR/hr
		13:30 to 15:00	350 mR/hr
		> 15:00	200 mR/hr
SG BD ROOM	- Point 1 EL 51'	< 13:30	25 mR/hr
		13:30 to 15:00	400 mR/hr
		> 15:00	175 mR/hr
	Point 2 EL 35'	< 13:30	150 mR/hr
		13:30 to 15:00	8000 mR/hr
		> 15:00	2500 mR/hr

NOTE 1: All open window (OW) mR/hr readings will be the same as the closed window (CW) mR/hr readings listed above.

NOTE 2: All loose contamination and airborne concentrations are actual levels detected.

NOTE 3: Data to be supplied to Rad Prot Tech at the locations after the survey is performed.

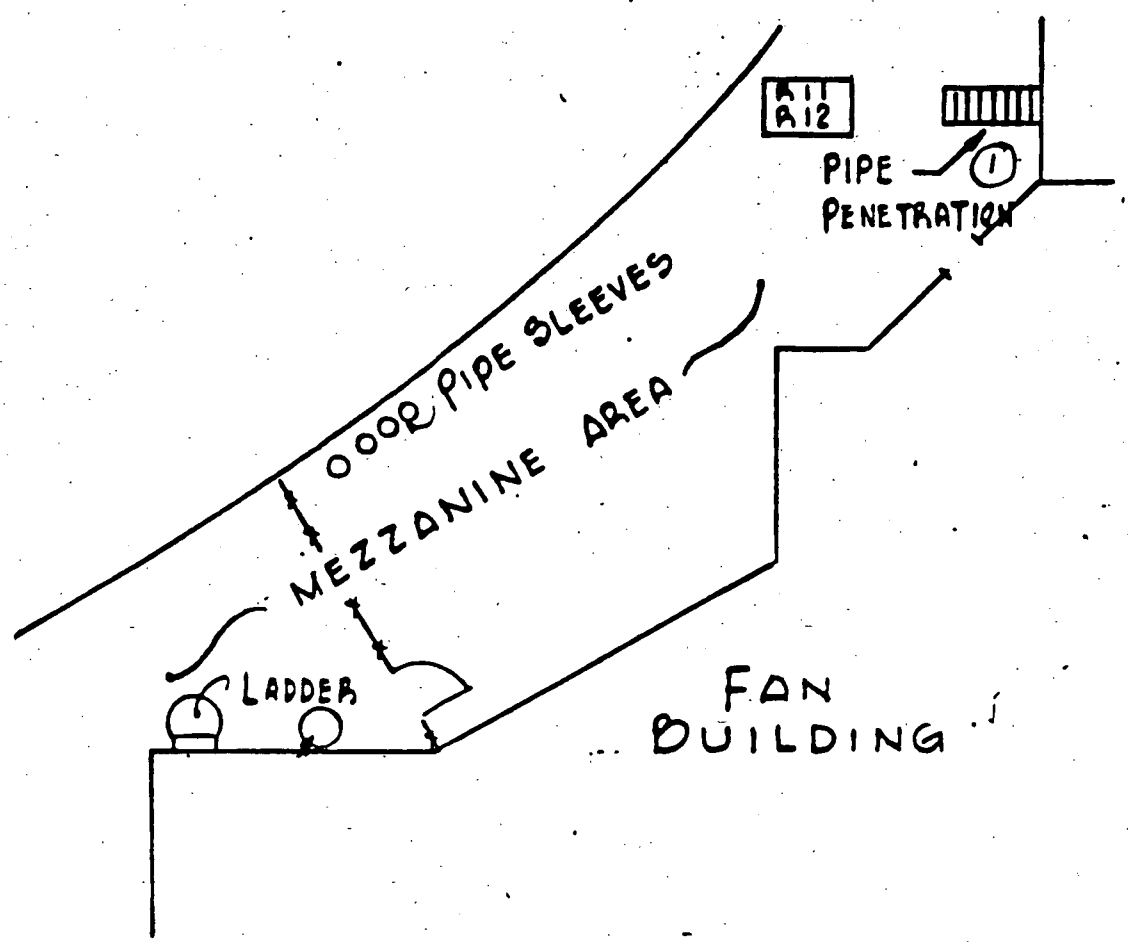

P.A.B EL. 78'-0"
R-11, R12-MEZZANINE

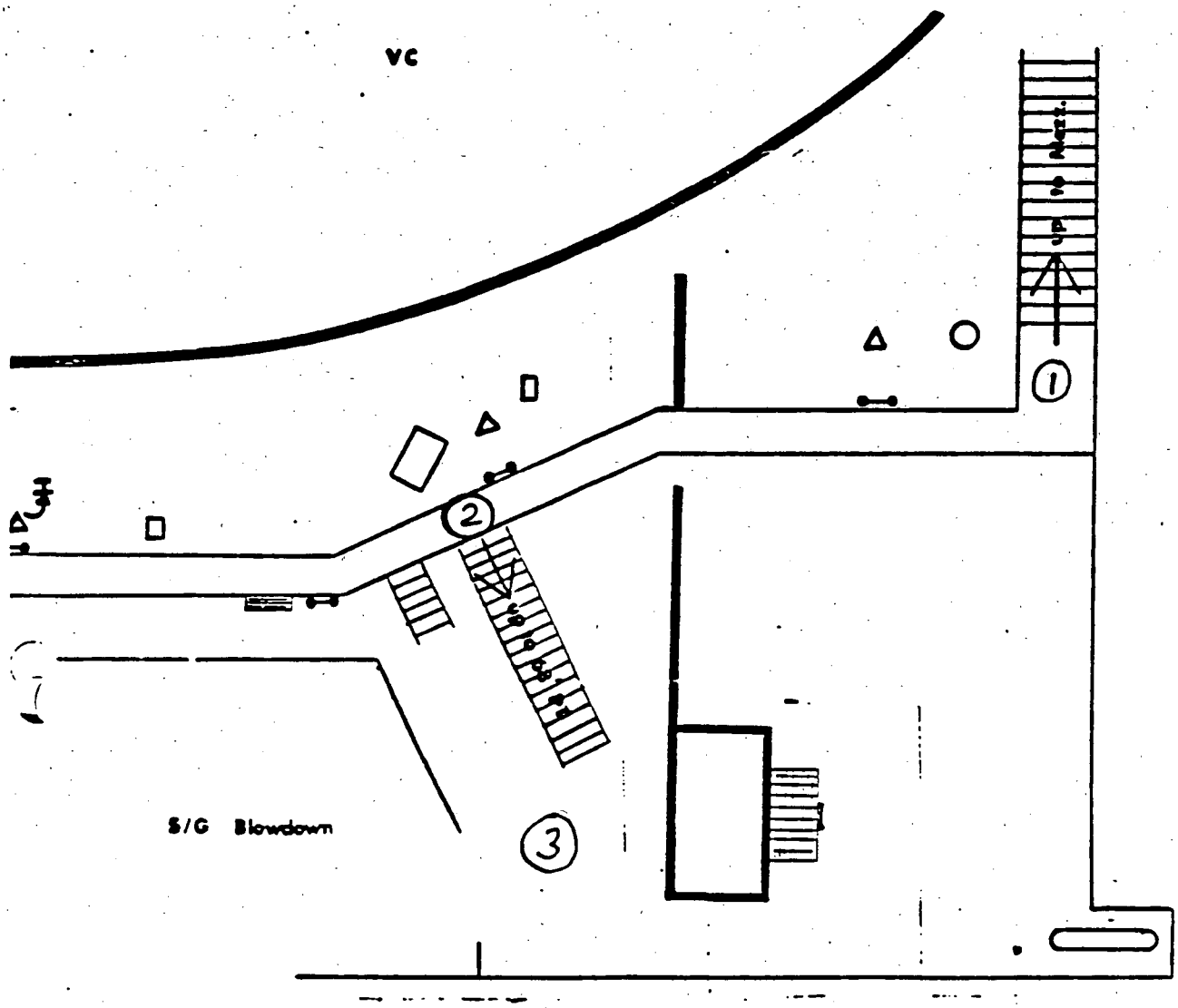

PIPING PEN. 51'0"

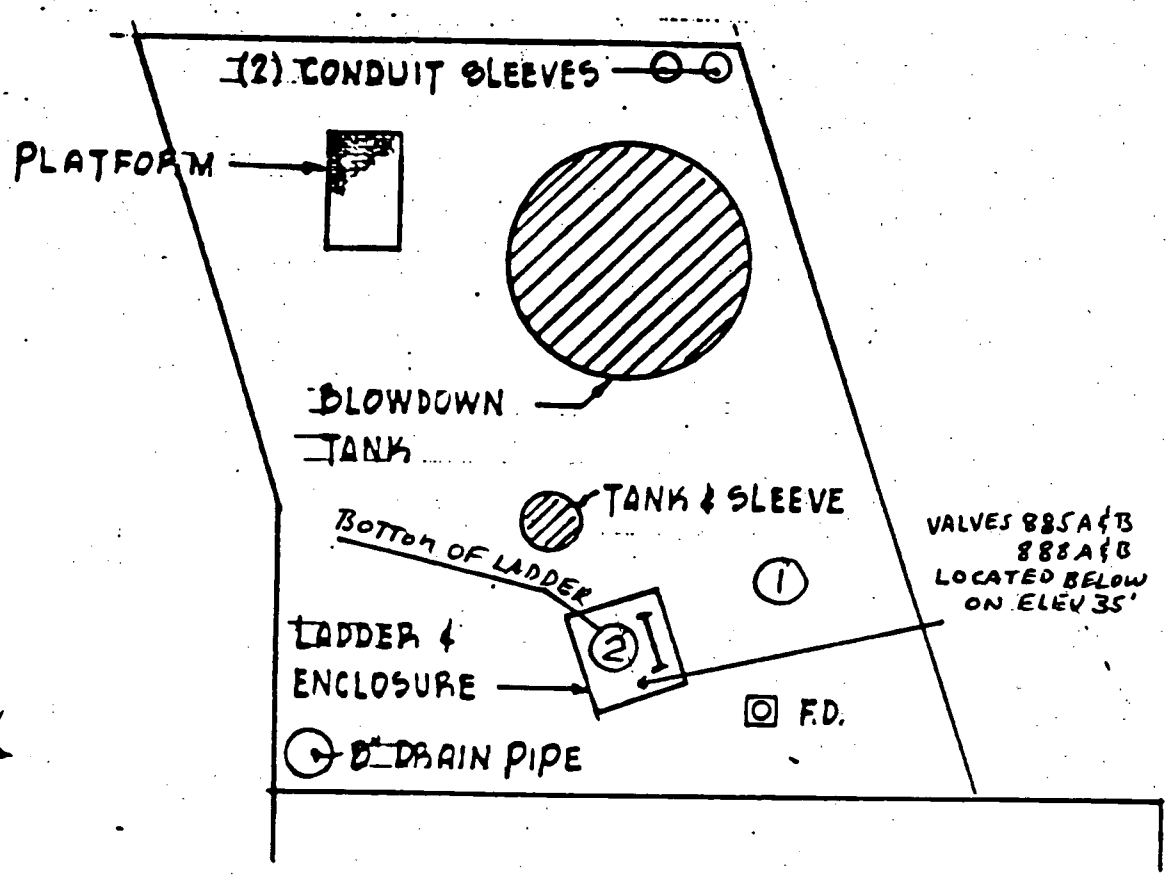

P.A.B. EL. 51'-0"

STEAM GENERATOR BLOWDOWN ROOM

TABLE 5

FACILITY RADIATION LEVELS

LOCATION	TIME	1 METER HEIGHT READING		10 ft.^{3} AIR SAMPLE		
		OW mR/hr	CW mR/hr	BKGD CPM	IODINE CPM	PART CPM
Emergency Operation Facility (EOF)	All Times	< 1.0	< 1.0	200	200	200
Operational Support Center (OSC)	< 13:00	< 1.0	< 1.0	200	200	200
	13:00	2.5	2.5	400	400	400
	14:30	2.5	2.5	400	400	400
	> 14:30	< 1.0	< 1.0	200	200	200
Technical Support Center (TSC)	All Times	< 1.0	< 1.0	200	200	200
Control Room (CR)	< 13:00	< 1.0	< 1.0	200	200	200
	13:00	< 1.0	< 1.0	200	200	200
	14:30	< 1.0	< 1.0	200	200	200
	> 14:30	< 1.0	< 1.0	200	200	200
Emergency News Center (ENC)	All Times	< 1.0	< 1.0	200	200	200
Recovery Center (RC)	All Times	< 1.0	< 1.0	200	200	200

* As requested, provide information to players actually performing functions to acquire data.

TABLE 6

REUTER-STOKES READINGS

mR/hr

TIME	1	2	3	4	5	6	7	8	9	10	11
<13:02											
13:02										3.6×10^2	6.0×10^1
13:15										3.8×10^2	6.5×10^1
13:30										3.6×10^2	6.4×10^1
13:45										3.5×10^2	6.3×10^1
14:00										3.5×10^2	6.3×10^1
14:15										3.4×10^2	6.2×10^1
14:32										3.0×10^2	6.0×10^1
>14:32											

All locations without readings are 7E-3 mR/hr

TABLE 6 (Continued)

REUTER-STOKES READINGS

mR/hr

TIME	12	13	14	15	16
<13:02					
13:02					
13:15					
13:30					
13:45					
14:00					
14:15					
14:32					
>14:32					

All locations without readings are 7E-3 mR/hr

TABLE 7

PLUME MONITORING DATA

TIME	EMERGENCY/FIXED SAMPLE SITE NO. NO.	MILES	1 METER HEIGHT READING OW mR/hr	CW mR/hr	10 FT^3 AIR SAMPLE DATA BKGD CPM	IODINE CPM	PART CPM
ALL TIMES	9	1-10	< 1	< 1	200	200	200
<13:06	10	1	< 1	< 1	200	200	200
13:06	10	1	90	82	200	257	200
13:50	10	1	90	82	200	257	200
14:36	10	1	90	82	200	257	200
>14:36	10	1	< 1	< 1	200	200	200
<13:24	10	4	< 1	< 1	200	200	200
13:24	10	4	5	4	200	203	200
14:10	10	4	5	4	200	203	200
14:54	10	4	5	4	200	203	200
>14:54	10	4	< 1	< 1	200	200	200
<13:42	10	7	< 1	< 1	200	200	200
13:42	10	7	3	2	200	202	200
14:25	10	7	3	2	200	202	200
15:12	10	7	3	2	200	202	200
>15:12	10	7	< 1	< 1	200	200	200
<14:00	10	10	< 1	< 1	200	200	200
14:00	10	10	1	1	200	200	200
14:45	10	10	1	1	200	200	200
15:30	10	10	1	1	200	200	200
>15:30	10	10	< 1	< 1	200	200	200

NOTE: The Emergency Or Fixed Sample Sites Are Indicated By Sector No. And Mile Distance.

TABLE 7

PLUME MONITORING DATA

TIME	EMERGENCY/FIXED SAMPLE SITE NO. NO.	MILES	1 METER HEIGHT READING OW mR/hr	CW mR/hr	10 FT^3 AIR SAMPLE DATA BKGD CPM	IODINE CPM	PART CPM
<13:06	11	1	< 1	< 1	200	200	200
13:06	11	1	45	41	200	228	200
13:50	11	1	45	41	200	228	200
14:36	11	1	45	41	200	228	200
>14:36	11	1	< 1	< 1	200	200	200
<13:18	11	3	< 1	< 1	200	200	200
13:18	11	3	1	1	200	200	200
14:05	11	3	1	1	200	200	200
14:48	11	3	1	1	200	200	200
>14:48	11	3	< 1	< 1	200	200	200
<13:36	11	6	< 1	< 1	200	200	200
13:36	11	6	< 1	< 1	200	200	200
14:20	11	6	< 1	< 1	200	200	200
15:06	11	6	< 1	< 1	200	200	200
>15:06	11	6	< 1	< 1	200	200	200
ALL TIMES	11	10	< 1	< 1	200	200	200

NOTE: The Emergency Or Fixed Sample Sites Are Indicated By Sector No. And Mile Distance.

TABLE 7 (Continued)

PLUME MONITORING DATA-SITE BOUNDARY SEGMENTS (mR/hr)

TIME	10 OW	10 CW	11 OW	11 CW
13:00	AS	READ	AS	READ
13:02	310	260	28	25
13:20	310	260	28	25
13:40	310	260	28	25
14:00	310	260	28	25
14:10	310	260	28	25
14:20	310	260	28	25
14:30	310	260	28	25
>14:32	AS	READ	AS	READ

All other segments AS READ at ALL TIMES

TIME	10 IODINE	10 PART	11 IODINE	11 PART
13:00	200	200	200	200
13:02	381	203	217	200
13:20	381	203	217	200
13:40	381	203	217	200
14:00	381	203	217	200
14:10	381	203	217	200
14:20	381	203	217	200
14:30	381	203	217	200
>14:32	200	200	200	200

Counter BKGD and other segments 200 CPM at ALL TIMES

SITE PERIMETER SURVEY LOCATIONS

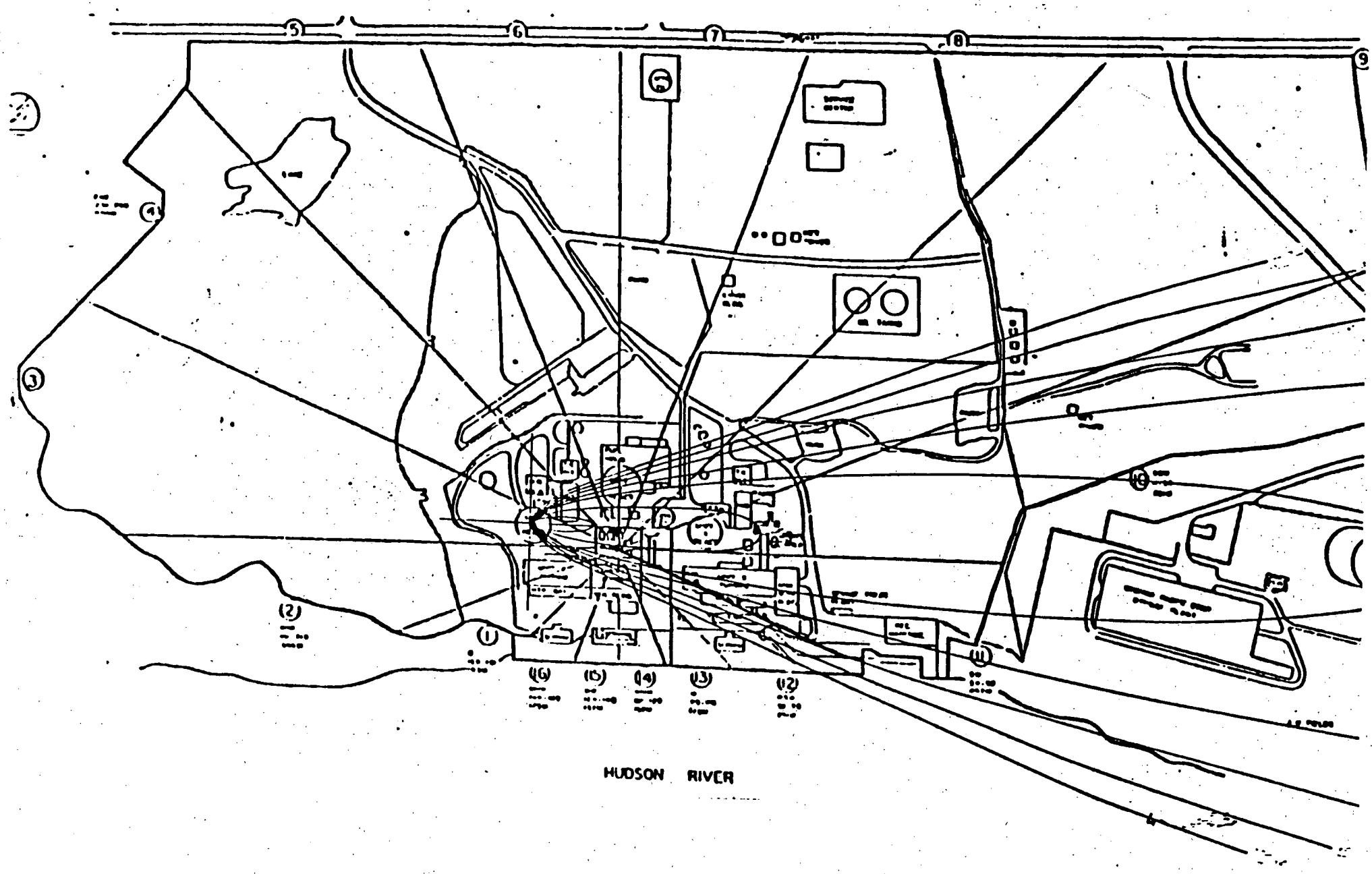

TABLE 7

PLUME CENTER LINE DATA

TIME	CENTERLINE DIRECTION NO.	DEG	MILES	1 METER HEIGHT READING CW mR/hr	OW mR/hr	10 FT^3 AIR SAMPLE DATA BKGD CPM	IODINE CPM	PART CPM
	PLUME CENTER LINE MAXIMUM READING							
	210	SB		262	400	200	382	200
	210	2		41	60	200	228	200
	210	5		10	15	200	207	200
	210	10		3	4	200	202	200

NOTES:

1. R-27 1.2E8 uCi/cc
2. PLANT VENT EXHAUST 4.5E4 CFM
3. NOBLE GAS RELEASE RATE 120 Ci/Sec
4. DEFAULT NG/I RATIO 10,000/1. USED TO RECOMMEND PROTECTIVE ACTIONS OFFSITE
5. ACTUAL SAMPLES ARE CALC USING 10,000/1 NG/I RATIO
6. PARTICULATE ACTIVITY IS CONSIDERED TO BE ABSENT
7. CALCULATIONS PERFORMED USING ATTACHMENTS 4.1 & 4.2 OF IMPLEMENTATION PROCEDURE IP-1007

TABLE 8

OFFSITE TLD READINGS

SECTOR	MILE RING	MREM	SECTOR	MILE RING	MREM
1	1		9	1	
	5			5	
	10			10	
2	1		10	1	123
	5			5	6
	10			10	1
3	1		11	1	62
	5			5	2
	10			10	1
4	1		12	1	
	5			5	
	10			10	
5	1		13	1	
	5			5	
	10			10	
6	1		14	1	
	5			5	
	10			10	
7	1		15	1	
	5			5	
	10			10	
8	1		16	1	
	5			5	
	10			10	

NOTE: Data to be supplied to Offsite Radiological Assessment Director.

TABLE 9

POST ACCIDENT SAMPLES

SAMPLE MEDIUM	SECTOR/ MILE	pCi/kg				
		I-131	I-133	I-135	Cs-134	Cs-137
GRASS/ BROAD LEAF	10-1	<LLD	<LLD	<LLD	<LLD	<LLD
	10-4	<LLD	<LLD	<LLD	<LLD	<LLD
	10-7	<LLD	<LLD	<LLD	<LLD	<LLD
	10-10	<LLD	<LLD	<LLD	<LLD	<LLD
	11-1	<LLD	<LLD	<LLD	<LLD	<LLD
	11-3	<LLD	<LLD	<LLD	<LLD	<LLD
	11-6	<LLD	<LLD	<LLD	<LLD	<LLD
	11-10	<LLD	<LLD	<LLD	<LLD	<LLD

NOTE 1: LLD = Lower Limit of Detection

NOTE 2: Data to be provided to ORAD only for samples taken

NOTE 3: All other sectors if taken will have values < LLD

TABLE 9

POST ACCIDENT SAMPLES

SAMPLE MEDIUM	SECTOR/ MILE	pCi/kg				
		I-131	I-133	I-135	Cs-134	Cs-137
SOIL	10-1	<LLD	<LLD	<LLD	<LLD	<LLD
	10-4	<LLD	<LLD	<LLD	<LLD	<LLD
	10-7	<LLD	<LLD	<LLD	<LLD	<LLD
	10-10	<LLD	<LLD	<LLD	<LLD	<LLD
	11-1	<LLD	<LLD	<LLD	<LLD	<LLD
	11-3	<LLD	<LLD	<LLD	<LLD	<LLD
	11-6	<LLD	<LLD	<LLD	<LLD	<LLD
	11-10	<LLD	<LLD	<LLD	<LLD	<LLD

NOTE 1: LLD = Lower Limit of Detection

NOTE 2: Data to be provided to ORAD only for samples taken

NOTE 3: All other sectors if taken will have values < LLD

TABLE 9

POST ACCIDENT SAMPLES

SAMPLE MEDIUM	SECTOR/ MILE	pCi/lt				
		I-131	I-133	I-135	Cs-134	Cs-137
LAKE, RESERVOIR, POND	10-1	<LLD	<LLD	<LLD	<LLD	<LLD
	10-4	<LLD	<LLD	<LLD	<LLD	<LLD
	10-7	<LLD	<LLD	<LLD	<LLD	<LLD
	10-10	<LLD	<LLD	<LLD	<LLD	<LLD
	11-1	<LLD	<LLD	<LLD	<LLD	<LLD
	11-3	<LLD	<LLD	<LLD	<LLD	<LLD
	11-6	<LLD	<LLD	<LLD	<LLD	<LLD
	11-10	<LLD	<LLD	<LLD	<LLD	<LLD

NOTE 1: LLD = Lower Limit of Detection

NOTE 2: Data to be provided to ORAD only for samples taken

NOTE 3: All other sectors if taken will have values < LLD

TABLE 10

POST ACCIDENT OFFSITE CONTAMINATION LEVELS

SECTOR MILE	RADIATION LEVELS (1) 1 METER HEIGHT CPM	CONTACT (2) CPM	SMEAR CHECK (3) CPM
10-SB	200	200	50
10-2	200	200	25
10-5	200	200	10
10-10	200	200	BKGD
11-SB	200	200	50
11-2	200	200	30
11-5	200	200	15
11-10	200	200	BKGD
OFFSITE TEAM VEHICLES	200	200	Variable 10-20

NOTE 1. Radiation level values are for survey instrument E-140N/HP-210 or HP-260 probe. Values for any other survey instrument used will be AS READ.

NOTE 2. Contact denotes as close as practical to the surface without touching it.

NOTE 3. These values are to be used only if a smear check has been made on a smooth surface. Values are CPM above background.

TABLE 11

MEDICAL EMERGENCY DATA

NOT REQUIRED FOR THIS SCENARIO

CONSOLIDATED EDISON COMPANY OF NEW YORK

INDIAN POINT UNIT NO. 2

DRILL SCENARIO NO. 1988

IX. LOGISTICS

A. Drill Size

There will be a full scale activation of the following facilities.

- Control Room
- Technical Support Center
- Operational Support Center
- Emergency Operations Facility
- Emergency News Center
- Corporate Response Center
- Astoria Emergency Control Center

B. Participation

Assembly and accountability will be required by all Con Edison personnel and contractor personnel at the site. After accountability has been completed, personnel not participating as players, controllers or observers will be permitted to return to their normal work locations. New York Power Authority personnel and contractors are not required to participate.

C. Arm Band Use

The following arm band color coding will be used during the drill.

Green - Controller
Red - Observer
White - Player

D. Access Lists

Access lists will only be prepared for the EOF for use by the Security Guard assigned to that post. All other Nuclear Power personnel not participating will be directed by their Department Managers to refrain from entering the TSC and OSC areas. Non drill participants requiring entry to the Control Room will be directed to contact the SWS assigned to the watch.

Security restrictions on entry through the Main Gate and Command Guard House will be lifted by the Security Controller one hour after the declaration of ALERT.

E. Lunch

Lunch will be provided to all players, observers and controllers at their respective facilities in order that the drill can continue without interruptions.

F. Critique

The Chief Controller will hold a critique at 0900 hours on December 8, 1988 at the Simulator Auditorium. All controllers and observers shall attend. This critique will be followed by one held by the N.R.C.

POST-EXERCISE ASSESSMENT

March 22, 1988, Exercise and the March 29, 1988, Remedial Drill
of the New York State Radiological Emergency
Preparedness Plan for the

INDIAN POINT NUCLEAR POWER STATION

Including

**New York State and Westchester,
Rockland, Putnam, and Orange Counties**

November 21, 1988

Federal Emergency Management Agency

Region II

26 Federal Plaza, New York, N.Y. 10278

~~8901200129~~ 144 pp.

POST EXERCISE ASSESSMENT

March 22, 1988, Exercise and the March 29, 1988 Remedial Drill
of the New York State Radiological Emergency Preparedness Plan

for the

Indian Point Nuclear Power Station
Including
New York State and Westchester,
Rockland, Putnam, and Orange Counties

November 21, 1988

Federal Emergency Management Agency
Region II

CONTENTS

PARTICIPATING GOVERNMENTS AND ORGANIZATIONS vi

ABBREVIATIONS vii

SUMMARY ix

1 INTRODUCTION 1

1.1 Exercise Background 1
1.2 Federal Evaluators 2
1.3 Evaluation Criteria 4
1.4 Exercise Objectives 5
1.4.1 New York State Emergency Operations Center 6
1.4.2 Southern District Emergency Operations Center 6
1.4.3 Emergency Operations Facility 7
1.4.4 Joint News Center 7
1.4.5 Westchester County Emergency Operations Center 8
1.4.6 Westchester County Field Activities 9
1.4.7 Rockland County Emergency Operations Center 10
1.4.8 Rockland County Field Activities 11
1.4.9 Orange County Emergency Operations Center 11
1.4.10 Orange County Field Activities 12
1.4.11 Putnam County Emergency Operations Center 13
1.4.12 Putnam County Field Activities 14
1.4.13 Dutchess County Emergency Operations Center 15
1.4.14 Dutchess County Field Activities 16
1.4.15 Bergen County, New Jersey, Emergency Operations Center 16
1.4.16 Bergen County, New Jersey, Field Activities 16
1.5 Exercise Scenario 16
1.5.1 Scenario Overview 16
1.5.2 Actual and Simulated Off-Site Event Matrix 18

2 EXERCISE EVALUATION 22

2.1 New York State 22
2.1.1 New York State Emergency Operations Center 22
2.1.2 Southern District Emergency Operations Center 25
2.2 Emergency Operations Facility 27
2.3 Joint News Center 29
2.3.1 Exercise Demonstration 29
2.3.2 EBS Remedial Drill 32
2.4 Westchester County, New York 34
2.4.1 Westchester County Emergency Operations Center 34
2.4.2 Field Monitoring Teams 40
2.4.3 Field Activities 42
2.4.4 Emergency Worker Radiological Exposure Control 46
2.4.5 School Interviews 48
2.4.6 Medical Drill 50

CONTENTS (Cont'd)

2.5 Rockland County, New York 52
2.5.1 Rockland County Emergency Operations Center 52
2.5.2 Field Monitoring Teams 58
2.5.3 Field Activities 59
2.5.4 Emergency Worker Radiological Exposure Control 63
2.5.5 School Interviews 64
2.6 Orange County, New York 67
2.6.1 Orange County Emergency Operations Center 67
2.6.2 Field Monitoring Teams 72
2.6.3 Field Activities 74
2.6.4 Emergency Worker Radiological Exposure Control 77
2.6.5 School Interviews 78
2.6.6 Medical Drill 79
2.7 Putnam County, New York 81
2.7.1 Putnam County Emergency Operations Center 81
2.7.2 Field Monitoring Teams 85
2.7.3 Field Activities 86
2.7.4 Emergency Worker Radiological Exposure Control 89
2.7.5 School Interviews 90
2.7.6 Medical Drill 92
2.8 Dutchess County, New York 94
2.8.1 Dutchess County Emergency Operations Center 94
2.8.2 Field Activities 94
2.9 Bergen County, New Jersey 97
2.9.1 Bergen County Emergency Operations Center 97
2.9.2 Field Activities 98

3 REMOVAL OF COMPLETED ARCAs FROM PREVIOUS PEA 100

4 SUMMARY OF DEFICIENCIES AND AREAS REQUIRING CORRECTIVE ACTION 101

TABLES

1.1 Emergency Classification Timeline 20

1.2 Protective Action Decision/Public Notification Timeline 21

4.1.0 Indian Point Nuclear Power Station — Summary of Deficiencies March 22, 1988 New York State 102

4.1.1 Indian Point Nuclear Power Station — Summary of Areas Requiring Corrective Action March 22, 1988 New York State 103

4.2.1 Indian Point Nuclear Power Station — Summary of Areas Requiring Corrective Action March 22, 1988 Southern District EOC 104

4.3.1 Indian Point Nuclear Power Station — Summary of Areas Requiring Corrective Action March 22, 1988 Emergency Operations Facility 105

TABLES (Cont'd)

4.4.1 Indian Point Nuclear Power Station — Summary of Areas Requiring Corrective Action March 22, 1988 Joint News Center 106

4.5.1 Indian Point Nuclear Power Station — Summary of Areas Requiring Corrective Action March 22, 1988 Westchester County 108

4.6.1 Indian Point Nuclear Power Station — Summary of Areas Requiring Corrective Action March 22, 1988 Rockland County 114

4.7.1 Indian Point Nuclear Power Station — Summary of Areas Requiring Corrective Action March 22, 1988 Orange County 121

4.8.1 Indian Point Nuclear Power Station — Summary of Areas Requiring Corrective Action March 22, 1988 Putnam County 125

4.9.1 Indian Point Nuclear Power Station — Summary of Areas Requiring Corrective Action March 22, 1988 Dutchess County 132

4.10.1 Indian Point Nuclear Power Station — Summary of Areas Requiring Corrective Action March 22, 1988 Bergen County, New Jersey 133

4.11.1 Indian Point Nuclear Power Station — Summary of Areas Requiring Corrective Action March 15, 1988 (Westchester), December 9, 1987 (Putnam) Medical Drills for Westchester and Putnam Counties 134

4.12.1 Indian Point Nuclear Power Station — Summary of Areas Requiring Corrective Action November 23, 1987 (Orange) Medical Drills for Rockland and Orange Counties 135

PARTICIPATING GOVERNMENTS AND ORGANIZATIONS

The State of New York

Westchester County

Rockland County

Orange County

Putnam County

Dutchess County

Bergen County, New Jersey

NONPARTICIPATING GOVERNMENTS

None

ABBREVIATIONS

ANL	Argonne National Laboratory
ARC	American Red Cross
ARCA	area requiring corrective action
ARFI	area recommended for improvement
BEOC	Bergen County Emergency Operations Center
BNL	Brookhaven National Laboratory
CADEMO	County Assistant Director of the Emergency Management Office
CAP	Civil Air Patrol
COVERS	County Orange Volunteer Emergency Radio Service
DEOC	Dutchess County Emergency Operations Center
DOC	U.S. Department of Commerce
DOE	U.S. Department of Energy
DOI	U.S. Department of the Interior
DOT	U.S. Department of Transportation
DRD	direct reading dosimeter
DSP	Division of State Police
DSS	Department of Social Services
EBS	Emergency Broadcast System
ECL	emergency classification level
EMO	Emergency Management Office
EOC	emergency operations center
EOF	emergency operations facility
EPA	U.S. Environmental Protection Agency
EPZ	emergency planning zone
ERPA	emergency response planning area
FDA	U.S. Food and Drug Administration
FEMA	Federal Emergency Management Agency
HELP	Helicopter Emergency Lift Program
HHS	U.S. Department of Health and Human Services
INEL	Idaho National Engineering Laboratory
IPNS	Indian Point Nuclear Power Station
IP-2	Indian Point Nuclear Power Station Unit No. 2
IP-3	Indian Point Nuclear Power Station Unit No. 3
JNC	joint news center
KI	potassium iodide
LOCA	loss-of-coolant accident
MIDAS	Meteorological Information and Dose Assessment System
NRC	U.S. Nuclear Regulatory Commission
NUE	notification of unusual event
OEOC	Orange County Emergency Operations Center

OES	Office of Emergency Services
PAG	protective action guide
PAR	protective action recommendation
PEOC	Putnam County Emergency Operations Center
PIO	public information officer
PMC	personnel monitoring center
RAC	Regional Assistance Committee
RACES	Radio Amateur Civil Emergency Service
RECS	Radiological Emergency Communications System
REOC	Rockland County Emergency Operations Center
REPG	Radiological Emergency Preparedness Group
RERP	Radiological Emergency Response Plan
SDEOC	Southern District Emergency Operations Center
SEMO	State Emergency Management Office
SEOC	State Emergency Operations Center
TCP	traffic control point
TLD	thermoluminescent dosimeter
USDA	U.S. Department of Agriculture
WP	Warning Point
WEOC	Westchester County Emergency Operations Center

SUMMARY

On March 22, 1988, a team of forty federal evaluators monitored an exercise of the radiological emergency response plans and the level of state and county preparedness for the Indian Point Nuclear Power Station in Westchester County, New York. The exercise, conducted by the New York State Power Authority, was full-scale and unannounced, taking place between approximately 0720 and 1715 hours. Following the exercise, a preliminary evaluation was made by the federal evaluation team, and a briefing for exercise participants was held at the Hotel Thayer on Thursday, March 24th at 1900. A public critique was held on Monday, March 28, 1988. Subsequent to the briefing and the public critique, detailed evaluations were prepared and are included in this report.

During a full-scale exercise, the Federal Emergency Management Agency requires that most components of the state and local emergency response organizations participate. The following operations or activities were specified for demonstration for the federal evaluators:

- State emergency operations center.
- Southern District emergency operations center.
- Emergency operations facility.
- Joint news center.
- Westchester County EOC.
- Rockland County EOC.
- Putnam County EOC.
- Orange County EOC.
- Evacuation of general population.
- Evacuation of schools.
- Siren activation (simulated) and Emergency Broadcast System messages (actual and simulated).
- Impediments to evacuation.
- Traffic control.
- Radiological field monitoring.

- Reception centers and congregate care centers.
- Medical drill.
- School interviews.

1 INTRODUCTION

1.1 EXERCISE BACKGROUND

On December 7, 1979, the President directed the Federal Emergency Management Agency (FEMA) to assume lead responsibility for all off-site nuclear planning and response. FEMA's responsibilities in radiological planning for fixed nuclear facilities include the following:

- Taking the lead in off-site emergency planning and in the review and evaluation of radiological emergency response plans developed by state and local governments,

- Determining whether such plans can be implemented, on the basis of observation and evaluation of exercises of the plans conducted by state and local governments, and

- Coordinating the activities of federal agencies with responsibilities in the radiological emergency planning process:

  - U.S. Department of Commerce (DOC)
  - U.S. Nuclear Regulatory Commission (NRC)
  - U.S. Environmental Protection Agency (EPA)
  - U.S. Department of Energy (DOE)
  - U.S. Department of Health and Human Services (HHS)
  - U.S. Department of Transportation (DOT)
  - U.S. Department of Agriculture (USDA)
  - U.S. Food and Drug Administration (FDA)
  - U.S. Department of the Interior (DOI)

Representatives of these agencies serve as members of the Regional Assistance Committee (RAC), which is chaired by FEMA.

Formal submission of the Indian Point Radiological Emergency Response Plans (RERPs) to the RAC by the state and involved local jurisdictions was followed closely by the critique and evaluation of these plans. The first joint radiological emergency preparedness exercise for the Indian Point Nuclear Power Station (IPNS) was held on March 3, 1982, and two public meetings were held in June 1982 to acquaint the public with the plan contents, answer questions, and receive suggestions on the plans.

A second joint exercise was conducted on March 9, 1983, and the post-exercise assessment was issued by FEMA Region II on April 14, 1983. An exercise of New York State's Interim Plan for implementing compensating measures for Rockland County was conducted on August 24-25, 1983, and the post-exercise assessment was issued by FEMA Region II on September 26, 1983. A third joint exercise was conducted on November 28, 1984, and the post-exercise assessment was issued by FEMA Region II on February 27, 1985. Following this full-scale exercise, a remedial exercise was held on April 10, 1985,

to evaluate the implementation of corrective actions taken by the state and local governments. A fourth joint exercise was conducted on June 4, 1986. Following this full-scale exercise, several remedial exercises were held between November 10, 1986, and December 3, 1986, for Westchester, Rockland, and Orange counties. On February 18, 1987, another remedial exercise was conducted in Westchester County. A fifth joint exercise (unannounced) was conducted on March 22, 1988, by the New York State Power Authority. In conjunction with the March 22, 1988 exercise a medical drill was conducted in Westchester County. A remedial drill was conducted on March 29, 1988 to rectify the Deficiency described in Section 2.3.1 of this report. Also, documented within this post exercise assessment report are the results of medical drills conducted (out of sequence) for Orange County and Putnam County on November 23, 1987 and December 9, 1987 respectively. Each exercise was designed to assess the capability of the state and local emergency preparedness organizations to implement their radiological emergency plans and procedures and protect the public in a radiological emergency involving IPNS.

Forty evaluators were assigned to evaluate activities of state and local jurisdictions. Evaluators were trained in radiological emergency planning concepts and given an evaluation kit, which included information on exercise objectives, the exercise scenario, and other issues relating to the exercise. Team leaders coordinated team operations.

Following the exercise, the federal evaluators met to compile their evaluations. Evaluators presented observations specific to their assignments, the teams of evaluators developed preliminary assessments for each jurisdiction, and team leaders consolidated the evaluations of individual team members. This final exercise report is based on these preliminary assessments.

The findings presented in this report are based on evaluations of Federal evaluators, with final determinations by the FEMA Region II RAC Chairman. FEMA requests that state and local jurisdictions submit a schedule of remedial actions for correcting the deficiencies discussed in this report. The Regional Director of FEMA is responsible for certifying to the FEMA Associate Director of State and Local Programs and Support, Washington, D.C., that all deficiencies observed during the exercise have been corrected and that such corrections have been incorporated into state and local plans, as appropriate.

1.2 FEDERAL EVALUATORS

Forty Federal evaluators evaluated off-site emergency response functions. These individuals, their affiliations, and their exercise assignments are given below.

Evaluator	Agency	Exercise Location/Function
I. Husar	FEMA	RAC Chairman/Evaluation
R. Garelik	FEMA	State Emergency Operations Center (SEOC)/Team Leader
S. Nelson	ANL	SEOC/Communications, Operations

Evaluator	Agency	Exercise Location/Function
S. Googins	EPA	SEOC/Accident Assessment
E. Dionne	FEMA	Poughkeepsie/Southern District EOC
E. Fox	NRC	Indian Point Emergency Operations Facility/Liaison
M. Jackson	FEMA	Joint News Center/Public Information
G. Connolly	FEMA	Westchester County EOC/Team Leader
J. Levenson	ANL	Westchester County EOC/Communications, Operations
L. Slagle	INEL	Westchester County EOC/Accident Assessment
M. Pensak	EPA	Westchester County/Radiological Field Monitoring
B. Galloway	ARC	Westchester County/Traffic Control Points, Congregate Care Center
B. Young	ANL	Westchester County/Evacuation/Reception Center
J. Picciano	FEMA	Westchester County/School Evacuation, Traffic Control Points
S. McIntosh	FEMA	Rockland County EOC/Team Leader
A. Teotia	ANL	Rockland County EOC/Communications, Operations
F. Wilson	ANL	Rockland County EOC/Accident Assessment
G. Hatch	FEMA	Rockland County/Congregate Care Center
F. Oleson	ANL	Rockland County/Evacuation, Reception Center
G. Goforth	ANL	Rockland County/Radiological Field Monitoring
L. Biliski	FEMA	Rockland County/Traffic Control Points, Impediments, School Evacuation
T. Baldwin	ANL	Orange County EOC/Team Leader
P. Kier	ANL	Orange County EOC/Communications, Operations
B. Salmonson	INEL	Orange County EOC/Accident Assessment
E. Hakala	ANL	Orange County/Evacuation, Reception Center

Evaluator	Agency	Exercise Location/Function
B. Knoerzer	ANL	Orange County/Congregate Care Center
E. Sears	ANL	Orange County/Radiological Field Monitoring Team
S. Hopkins	FEMA	Orange County/Traffic Control Points, School Evacuation
R. Acerno	FEMA	Putnam County EOC/Team Leader
H. Fish	DOE	Putnam County EOC/Communications, Operations
N. Chipman	INEL	Putnam County EOC/Accident Assessment
J. Staroba	ANL	Putnam County/Evacuation, Reception Center
P. Collazo	FEMA	Putnam County/Impediments, Traffic Control Points
H. Fortin	FEMA	Putnam County/Congregate Care Center
W. Kiesleski	ANL	Putnam County/Radiological Field Monitoring
S. Gray	FEMA	Putnam County/Mobility Impaired, School Evacuation
J. Lamb	FEMA	Dutchess County/EOC, Reception Center, Congregate Care Center
A. Davis	FEMA	Bergen County/EOC, Congregate Care Center
R. Bernacki	FDA	Medical Drills - Westchester, Orange and Putnam Counties
P. Weberg	FEMA	Protective Actions for School Children

1.3 EVALUATION CRITERIA

The exercise evaluations presented in Section 2 of this report are based on applicable planning standards and evaluation criteria set forth in NUREG-0654-FEMA-1, Rev. 1 (Nov. 1980), Sec. II. For the purpose of exercise assessment, FEMA uses an evaluation method to apply the criteria of NUREG-0654. FEMA classifies exercise inadequacies as Deficiencies or Areas Requiring Corrective Action. Deficiencies are demonstrated and observed inadequacies that would cause a finding that off-site emergency preparedness was not adequate to provide reasonable assurance that appropriate protective measures can be taken to protect the health and safety of the public living in the vicinity of a nuclear power facility in the event of radiological emergency. Because of the potential impact of Deficiencies on emergency preparedness, they are must corrected promptly through appropriate remedial actions, including

remedial exercises, drills, or other actions. Areas Requiring Corrective Action (ARCAs) are demonstrated and observed inadequacies of state and local government performance, and although their correction is required, they are not considered, by themselves, to adversely impact public health and safety. An ARCA which is not corrected in future exercises may be reclassified as a deficiency. In addition to these inadequacies, FEMA identifies areas recommended for improvement (ARFIs), which are problem areas observed during an exercise that are not considered to adversely impact public health and safety. While not required, correction of these would enhance an organization's level of emergency preparedness.

1.4 EXERCISE OBJECTIVES

The objectives of state and local jurisdictions in this exercise were to demonstrate the adequacy of the radiological emergency response plans, the capability to mobilize needed personnel and equipment, and familiarity with procedures required to cope with an emergency at the NYPA Indian Point Nuclear Power Station Unit No. 3 (IP-3). The exercise was to involve activation and participation of staff and response facilities of IP-3 as well as emergency organizations and facilities of New York State and the counties of Westchester, Rockland, Orange, and Putnam. Support (host) counties of Dutchess, New York, and Bergen, New Jersey, were intended to have limited activities and participation of their respective staff and organizations consistent with the exercise scenario.

The scope of this exercise, with some exceptions, was to endeavor to demonstrate by actual performance a number of primary emergency preparedness functions. At no time was the exercise to interfere with safe operation of IP-3. This scenario was designed to activate the IP-3 and NYPA Headquarters emergency plans through their various action levels. Although the scenario accurately simulates operating events, it was not intended to assess all of the operators' diagnostic capabilities, but rather to provide sequences that ultimately demonstrated the operators' ability to respond to events and that resulted in exercising both on-site and off-site emergency plans and procedures.

In order to minimize the impact on scheduling and agendas, the scenario was designed to be completed in a little more than a routine working day. In order to provide a conservative exercise in terms of off-site doses and areas affected, an exercise meteorology was developed. Actual meteorology would probably lead to projected radiological doses below established protective action guides (PAGs) within the areas of interest.

The State of New York Radiological Emergency Preparedness Group and participating governments agreed to demonstrate the following objectives for this exercise and have been referenced in the exercise evaluation section (Section 2) of this report.

1.4.1 New York State Emergency Operations Center

SEOC-1 Demonstrate the ability to mobilize staff and activate facilities promptly.

SEOC-2 Demonstrate the ability to fully staff facilities and maintain staffing around the clock.

SEOC-3 Demonstrate the ability to make decisions and to coordinate emergency activities.

SEOC-4 Demonstrate the adequacy of facilities and displays to support emergency operations.

SEOC-5 Demonstrate the ability to communicate with all appropriate locations, organizations, and field personnel.

SEOC-6 Demonstrate the ability to identify the need for, request, and obtain federal assistance.

SEOC-7 Demonstrate the ability to project dosage to the public via the plume exposure, based on plant and field data, and to determine appropriate protective actions based on PAGs, available shelter, evacuation time estimates, and all other appropriate factors.

SEOC-8 Demonstrate the ability to make the decision, based on predetermined criteria, whether to issue KI to emergency workers and/or the general population.

SEOC-9 Demonstrate the ability to supply and administer KI, if the decision has been made to do so.

SEOC-10 Demonstrate the ability to alert the public within the 10-mile emergency planning zone (EPZ), and disseminate an initial instructional message, within 15 minutes.

SEOC-11 Demonstrate the ability to provide advance coordination of information released.

1.4.2 Southern District Emergency Operations Center

SDEOC-1 Demonstrate the ability to mobilize staff and activate facilities promptly.

SDEOC-2 Demonstrate the ability to fully staff facilities and maintain staffing around the clock.

SDEOC-3 Demonstrate the ability to make decisions and to coordinate emergency activities.

SDEOC-4 Demonstrate the adequacy of facilities and displays to support emergency operations.

SDEOC-5 Demonstrate the ability to communicate with all appropriate locations, organizations, and field personnel.

1.4.3 Emergency Operations Facility

EOF-1 Demonstrate the ability to mobilize staff and activate facilities promptly.

EOF-2 Demonstrate the ability to fully staff facilities and maintain staffing around the clock.

EOF-3 Demonstrate the ability to communicate with all appropriate locations, organizations, and field personnel.

1.4.4 Joint News Center

JNC-1 Demonstrate the ability to mobilize staff and activate facility promptly.

JNC-2 Demonstrate the ability to fully staff facilities and maintain staffing around the clock.

JNC-3 Demonstrate the ability to alert the public within 10-mile EPZ, and disseminate an initial instructional message, within 15 minutes.

JNC-4 Demonstrate the ability to formulate and distribute appropriate instructions to the public in a timely fashion.

JNC-5 Demonstrate the ability to brief the media in a clear, accurate, and timely manner.

JNC-6 Demonstrate ability to provide advance coordination of information released.

JNC-7 Demonstrate the ability to establish and operate rumor control in a coordinated fashion.

1.4.5 Westchester County Emergency Operations Center

WEOC-1 Demonstrate the ability to mobilize staff and activate facilities promptly.

WEOC-2 Demonstrate the ability to fully staff facilities and maintain staffing around the clock (by roster).

WEOC-3 Demonstrate the ability to make decisions and to coordinate emergency activities.

WEOC-4 Demonstrate the adequacy of facilities and displays to support emergency operations.

WEOC-5 Demonstrate the ability to communicate with all appropriate locations, organizations, and field personnel.

WEOC-6 Demonstrate ability to project radiation dosage to the public via plume exposure, based on plant and field data, and to determine appropriate protective measures, based on PAGs, available shelter, evacuation time estimates, and all other appropriate factors.

WEOC-7 Demonstrate the ability to alert the public within the 10-mile EPZ, and disseminate an initial instructional message, within 15 minutes.

WEOC-8 Demonstrate the ability to provide advance coordination of information released.

WEOC-9 Demonstrate the organizational ability and resources necessary to manage an orderly evacuation of all or part of the plume EPZ.

WEOC-10 Demonstrate the organizational ability to deal with impediments to evacuation, such as inclement weather or traffic obstruction.

WEOC-11 Demonstrate the organizational ability necessary to control access to an evacuated area.

WEOC-12 Demonstrate the ability to supply and administer KI, once the decision has been made to do so.

WEOC-13 Demonstrate the ability to effect an orderly evacuation of on-site personnel.

1.4.6 Westchester County Field Activities

WCFA-1 Demonstrate the ability to mobilize staff and activate facilities promptly.

WCFA-2 Demonstrate the ability to mobilize and deploy field monitoring teams in a timely manner.

WCFA-3 Demonstrate appropriate equipment and procedures for determining ambient radiation levels.

WCFA-4 Demonstrate appropriate equipment and procedures for measurement of airborne radioiodine concentrations as low as 10^{-7} μCi/CC in the presence of noble gas.

WCFA-5 Demonstrate the organizational ability and resources necessary to manage an orderly evacuation of all or part of the plume EPZ.

WCFA-6 Demonstrate the organizational ability and resources necessary to control access to an evacuated area.

WCFA-7 Demonstrate the ability to continuously monitor and control emergency worker exposure.

WCFA-8 Demonstrate the ability to supply and administer KI, if the decision has been made to do so.

WCFA-9 Demonstrate the adequacy of procedures for registration and radiological monitoring of evacuees.

WCFA-10 Demonstrate the adequacy of facilities for mass care of evacuees.

WCFA-11 Demonstrate the ability to communicate with all appropriate locations, organizations, and field personnel.

WCFA-12 Demonstrate the organizational ability and resources necessary to effect an orderly evacuation of schools within the plume EPZ.

WCFA-13 Demonstrate the adequacy of ambulance facilities and procedures for handling contaminated individuals.

WCFA-14 Demonstrate the adequacy of hospital facilities and procedures for handling contaminated individuals.

1.4.7 Rockland County Emergency Operations Center

REOC-1 Demonstrate the ability to mobilize staff and activate facilities promptly.

REOC-2 Demonstrate the ability to fully staff facilities and maintain staffing around the clock (by roster, except actual shift change for Special Facilities Coordinator and dose assessment team leader).

REOC-3 Demonstrate the ability to make decisions and to coordinate emergency activities.

REOC-4 Demonstrate the adequacy of facilities and displays to support emergency operations.

REOC-5 Demonstrate the ability to communicate with all appropriate locations, organizations, and field personnel.

REOC-6 Demonstrate ability to project radiation dosage to the public via plume exposure, based on plant and field data, and to determine appropriate protective measures, based on PAGs, available shelter, evacuation time estimates, and all other appropriate factors.

REOC-7 Demonstrate the ability to alert the public within the 10-mile EPZ, and disseminate an initial instructional message, within 15 minutes.

REOC-8 Demonstrate the ability to provide advance coordination of information released.

REOC-9 Demonstrate the organizational ability and resources necessary to manage an orderly evacuation of all or part of the plume EPZ.

REOC-10 Demonstrate the organizational ability to deal with impediments to evacuation, such as inclement weather or traffic obstruction.

REOC-11 Demonstrate the organizational ability necessary to control access to an evacuated area.

REOC-12 Demonstrate the ability to supply and administer KI, once the decision has been made to do so.

1.4.8 Rockland County Field Activities

RCFA-1 Demonstrate the ability to mobilize staff and activate facilities promptly.

RCFA-2 Demonstrate the ability to mobilize and deploy field monitoring teams in a timely manner.

RCFA-3 Demonstrate appropriate equipment and procedures for determining ambient radiation levels.

RCFA-4 Demonstrate appropriate equipment and procedures for measurement of airborne radioiodine concentrations as low as 10^{-7} μi/CC in the presence of noble gas.

RCFA-5 Demonstrate the organizational ability and resources necessary to manage an orderly evacuation of all or part of the plume EPZ.

RCFA-6 Demonstrate the organizational ability and resources necessary to control access to an evacuated area.

RCFA-7 Demonstrate the ability to continuously monitor and control emergency worker exposure.

RCFA-8 Demonstrate the ability to supply and administer KI, if the decision has been made to do so.

RCFA-9 Demonstrate the adequacy of procedures for registration and radiological monitoring of evacuees.

RCFA-10 Demonstrate the ability to communicate with all appropriate locations, organizations, and field personnel.

RCFA-11 Demonstrate the organizational ability and resources necessary to effect an orderly evacuation of schools within the plume EPZ.

RCFA-12 Demonstrate the organizational ability and resources necessary to effect an orderly evacuation of schools within the plume EPZ.

1.4.9 Orange County Emergency Operations Center

OEOC-1 Demonstrate the ability to mobilize staff and activate facilities promptly.

OEOC-2 Demonstrate the ability to fully staff facilities and maintain staffing around the clock (by roster).

OEOC-3 Demonstrate the ability to make decisions and to coordinate emergency activities.

OEOC-4 Demonstrate the adequacy of facilities and displays to support emergency operations.

OEOC-5 Demonstrate the ability to communicate with all appropriate locations, organizations, and field personnel.

OEOC-6 Demonstrate the ability to project radiation dosage to the public via plume exposure, based on plant and field data, and to determine appropriate protective measures, based on PAGs, available shelter, evacuation time estimates, and all other appropriate factors.

OEOC-7 Demonstrate the ability to alert the public within the 10-mile EPZ, and disseminate an initial instructional message, within 15 minutes.

OEOC-8 Demonstrate the ability to provide advance coordination of information released.

OEOC-9 Demonstrate the organizational ability and resources necessary to manage an orderly evacuation of all or part of the plume EPZ.

OEOC-10 Demonstrate the organizational ability to deal with impediments to evacuation, such as inclement weather or traffic obstruction.

OEOC-11 Demonstrate the organizational ability necessary to control access to an evacuated area.

OEOC-12 Demonstrate the ability to supply and administer KI, once the decision has been made to do so.

1.4.10 Orange County Field Activities

OCFA-1 Demonstrate the ability to mobilize staff and activate facilities promptly.

OCFA-2 Demonstrate the ability to mobilize and deploy field monitoring teams in a timely manner.

OCFA-3 Demonstrate appropriate equipment and procedures for determining ambient radiation levels.

OCFA-4 Demonstrate appropriate equipment and procedures for measurement of airborne radioiodine concentrations as low as 10^{-7} μCi/CC in the presence of noble gas.

OCFA-5 Demonstrate the organizational ability and resources necessary to manage an orderly evacuation of all or part of the plume EPZ.

OCFA-6 Demonstrate the organizational ability and resources necessary to control access to an evacuated area.

OCFA-7 Demonstrate the ability to continuously monitor and control emergency worker exposure.

OCFA-8 Demonstrate the ability to supply and administer KI, if the decision has been made to do so.

OCFA-9 Demonstrate the adequacy of procedures for registration and radiological monitoring of evacuees.

OCFA-10 Demonstrate the adequacy of facilities for mass care of evacuees.

OCFA-11 Demonstrate the ability to communicate with all appropriate locations, organizations, and field personnel.

OCFA-12 Demonstrate the organizational ability and resources necessary to effect an orderly evacuation of schools within the plume EPZ.

OCFA-13 Demonstrate the adequacy of ambulance facilities and procedures for handling contaminated individuals.

OCFA-14 Demonstrate the adequacy of hospital facilities and procedures for handling contaminated individuals.

1.4.11 Putnam County Emergency Operations Center

PEOC-1 Demonstrate the ability to mobilize staff and activate facilities promptly.

PEOC-2 Demonstrate the ability to fully staff facilities and maintain staffing around the clock (by roster, except actual shift change for dose assessment team leader).

PEOC-3 Demonstrate the ability to make decisions and to coordinate emergency activities.

PEOC-4 Demonstrate the adequacy of facilities and displays to support emergency operations.

PEOC-5 Demonstrate the ability to communicate with all appropriate locations, organizations, and field personnel.

PEOC-6 Demonstrate the ability to project radiation dosage to the public via plume exposure, based on plant and field data, and to determine appropriate protective measures, based on PAGs, available shelter, evacuation time estimates, and all other appropriate factors.

PEOC-7 Demonstrate the ability to alert the public within the 10-mile EPZ, and disseminate an initial instructional message, within 15 minutes.

PEOC-8 Demonstrate the ability to provide advance coordination of information released.

PEOC-9 Demonstrate the organizational ability and resources necessary to manage an orderly evacuation of all or part of the plume EPZ.

PEOC-10 Demonstrate the organizational ability to deal with impediments to evacuation, such as inclement weather or traffic obstruction.

PEOC-11 Demonstrate the organizational ability necessary to control access to an evacuated area.

PEOC-12 Demonstrate the ability to supply and administer KI, once the decision has been made to do so.

PEOC-13 Demonstrate the organizational ability and resources necessary to evaluate mobility-impaired persons.

1.4.12 Putnam County Field Activities

PCFA-1 Demonstrate the ability to mobilize staff and activate facilities promptly.

PCFA-2 Demonstrate the ability to mobilize and deploy field monitoring teams in a timely manner.

PCFA-3 Demonstrate appropriate equipment and procedures for determining ambient radiation levels.

PCFA-4 Demonstrate appropriate equipment and procedures for measurement of airborne radioiodine concentrations as low as 10^{-7} μCi/CC in the presence of noble gas.

PCFA-5 Demonstrate the organizational ability and resources necessary to manage an orderly evacuation of all or part of the plume EPZ.

PCFA-6 Demonstrate a sample of resources necessary to deal with impediments to evacuation, as inclement weather or traffic obstruction.

PCFA-7 Demonstrate the organizational ability and resources necessary to control access to an evacuated area.

PCFA-8 Demonstrate the ability to continuously monitor and control emergency worker exposure.

PCFA-9 Demonstrate the ability to supply and administer KI, if the decision has been made to do so.

PCFA-10 Demonstrate the adequacy of procedures for registration and radiological monitoring of evacuees.

PCFA-11 Demonstrate the organizational ability and resources necessary to effect an orderly evacuation of mobility-impaired individuals within the plume EPZ.

PCFA-12 Demonstrate the ability to communicate with all appropriate locations, organizations, and field personnel.

PCFA-13 Demonstrate the organizational ability and resources necessary to effect an orderly evacuation of schools within the plume EPZ.

PCFA-14 Demonstrate the adequacy of ambulance facilities and procedures for handling contaminated individuals.

PCFA-15 Demonstrate the adequacy of hospital facilities and procedures for handling contaminated individuals.

1.4.13 Dutchess County Emergency Operations Center

DEOC-1 Demonstrate the ability to fully staff facilities and maintain staffing around the clock.

1.4.14 Dutchess County Field Activities

DFA-1 Demonstrate the adequacy of procedures for registration and radiological monitoring of evacuees.

DFA-2 Demonstrate the adequacy of facilities for mass care of evacuees.

1.4.15 Bergen County, New Jersey, Emergency Operations Center

BEOC-1 Demonstrate the ability to mobilize staff and activate facilities promptly.

BEOC-2 Demonstrate the adequacy of facilities and displays to support emergency operations.

1.4.16 Bergen County, New Jersey Field Activities

BFA-1 Demonstrate the adequacy of facilities for mass care of evacuees.

1.5 EXERCISE SCENARIO

1.5.1 Scenario Overview

Initial Conditions — 0700 hrs

The Indian Point Unit #3 Nuclear Power Plant was at MOL and had been operating for 100 days at 100% power. Normal shift routine was carried out with no unusual occurrences. #32 Safety Injection Pump had been declared inoperable after failing a surveillance test at 0600 hrs and had been removed from service for maintenance. The plant had entered a Technical Specification Action Statement which allows continued power operation for 24 hrs with a single Safety Injection Pump inoperable provided that the remaining two pumps were demonstrated to be operable. Surveillance testing on #31 Safety Injection Pump was in progress and testing of #33 Safety Injection Pump commenced immediately after testing of #31 was complete.

Drill Commences — 0715 hrs

At 0715 #31 Safety Injection Pump was inoperable. During surveillance testing the pump motor seized and considerable time was required for repairs. Technical Specifications require that the Reactor be in Hot Shutdown (HSD) within 4 hrs and in

Cold Shutdown (CSD) within 24 hrs. A plant shutdown should have been commenced and a Notification of Unusual Event should have been declared due to plant shutdown required by technical specifications for loss of an engineered feature. (XV.1)

At 0840 hrs, a fire broke out in the #32 Emergency Diesel Generator Room. The CO_2 fire protection system activated; however, damage to #32 Emergency Diesel was extensive. The Fire Brigade was dispatched by the Control Room Operator; however, their entry into the room was delayed until the atmosphere had been purged and the air in the room tested for habitability.

At 0900 hrs, an Alert should have been declared due to a fire potentially affecting safety systems. (III.2)

At 0915 hrs., the fire was declared out and damage reports indicated that wireways and control systems affecting #32 Emergency Diesel were extensively damaged rendering it unusable.

A Reactor Trip and Safety Injection occurred at 1030 hrs, due to low pressurizer pressure. Containment conditions indicated significant RCS leakage. The source of leakage is a small break on the #31 cold leg of the reactor coolant system of about 2 in. in diameter. A Site Area Emergency should have been declared due to a known loss of coolant exceeding the capacity of two charging pumps. (I.A.5)

Concurrent with the Low Pressure Safety Injection, a Phase "A" Containment Isolation signal was initiated. When the Steam Generator Blowdown Isolation Valves close, a "water hammer" initiated a crack in #33 Steam Generator blowdown line on both sides of the containment penetration. Leakage of steam and water into the piping penetration area was reported by the nuclear side NPO.

With the Reactor Coolant System stabilized at approximately 800 psi, a loss of offsite power occurred and bus section 6A would not re-energize due to a failure of #32 Emergency Diesel Generator. This renders the only remaining Safety Injection Pump inoperable terminating the only source of injection flow to the Reactor Coolant System. At approximately 1200 hrs, a General Emergency should have been declared due to a subsequent failure of the Emergency Core Cooling System (ECCS). (I.A.6.b)

While monitoring containment conditions, plant operators noticed an increase in containment radiation levels indicating that fuel damage had occurred. Plant vent radiation was also increasing indicating that the containment building was not effectively isolated. #33 Steam Generator had depressurized to containment pressure and containment atmosphere was leaking through the cracked blowdown line into the piping penetration area. At 1400 hrs, calculations should have commenced to determine the magnitude of release and recommendations to offsite emergency control centers should have been made.

At 1700 hrs, the containment building was isolated and the offsite release was determined.

A time advance occurred at 1715 hrs and the drill was terminated.

1.5.2 Actual and Simulated Off-Site Events Matrix

Event	New York State	Utility	West-chester	Rockland	Orange	Putnam
Notification of Agencies	Actual	Actual	Actual	Actual	Actual	Actual
Call-up of Personnel	Actual	Actual	Actual	Actual	Actual	Actual
Activate Response	Actual	Actual	Actual	Actual	Actual	Actual
Maintain Security	Actual	Actual	Actual	Actual	Actual	Actual
Conduct Dose Assessment	Actual	Actual	Actual	Actual	Actual	Actual
PAG Recommendation	Actual	Actual	Actual	Actual	Actual	Actual
JNC Operation	Actual	Actual	Actual	Actual	Actual	Actual
Siren Activation	NA	NA	Simulate	Simulate	Simulate	Simulate
Back-up Route Alerting	NA	NA	Actual	Simulate	Simulate	Simulate
Dispatch Field Survey Teams	NA	Actual	Actual (1)	Actual (1)	Actual (1)	Actual (1)
Exchange of Field Data	NA	Actual	Actual	Actual	Actual	Actual
Reception Center Setup	NA	NA	Actual (1)	Actual (1)	Actual (1)	Actual (1)
Congregate Care Center	N/A	NA	Actual (1)a	Actual (1)	Actual (1)	Actual (1)b
General Population Bus Run	NA	NA	Actual (1)	Actual (1)	Actual (1)	Actual (1)
School Bus Run	NA	NA	Actual (1)	Actual (1)	Actual (1)	Actual (1)
Traffic Control Points	NA	NA	Actual (2) 1 DSP, 1 county	Actual (1)	Actual (1)	Actual (1)

1.5.2 (Cont'd)

Event	New York State	Utility	West-chester	Rockland	Orange	Putnam
Road Impediments	NA	NA	Simulate	Simulate	Simulate	Actual (1)
KI Issuance (if warranted)	Simulate	Simulate	Simulate	Simulate	Simulate	Simulate
Mobile Impaired	NA	NA	NA	Simulate (EOC dis-cussion)	Simulate (EOC dis-cussion)	Actual (1)
School Interviews	NA	NA	1 school per district within 10-mi EPZ			
Medical	NA	NA	Actual	NA	c	d

[a]Located in Bergen.

[b]Located in Dutchess.

[c]Orange County Medical Drill (November 23, 1987) evaluated in this report.

[d]Putnam Medical Drill (December 9, 1987) evaluated in this report.

TABLE 1.1 Emergency Classification Timeline[a]

Emergency Classification	Utility Declared	State EOC Albany	Southern District EOC	Rockland County EOC	Westchester County EOC	Putnam County EOC	Orange County EOC	Joint News Center	Dutchess County EOC	Bergen County EOC
Notification of Unusual Event	0722	0722[b]	0725	0722[b]	0724[b]	0724[b]	0722[b]	N/A	0741	0722
Alert Notification	0845	0845	0852	0846	0845	0846	0845	0852	0858	0846
Facility Declared Operational	0951	0932	0900	0855	0840	0921	0930	0933	1025	0855
Site Area Emergency Notification	1032	1032	1038	1032	1036	1032	1032	1032	1053	1032
General Emergency Notification	1208	1208	1208	1204	1208	1208	1208	1208	1215	1204
Release Started	1401	1415	1415	1415	1415	1415	1415	N/R	N/R	1415
Release Terminated	1702	1705	1705	1705	1705	1705	1705	N/R	N/R	1705

[a]Times that events were observed at each location: N/A = not applicable; N/R = not reported.

[b]NUE received at respective Warning Point.

TABLE 1.2 Protective Action Decision/Public Notification Timeline

EBS Message Number	Protective Action	Hotline Decision Time	Siren Activation Time[a]	EBS Activation Time[a]	Responsible Jurisdiction
1	Rockland: All schools and parks have been closed; children dismissed according to early dismissal.	0924	0936	0959[b]	Rockland
	[c]Westchester, Orange, Putnam: Stay tuned to EBS.				
2	Close river ERPAs 42 through 46	1010	-	1025	Westchester
3	Rockland: Evacuate - ERPAs 29, 38, 39, 40; Shelter ERPAs 30, 31, 32 [Local State of Emergency]	1103	1115	1118	Rockland
	Westchester: Evacuate - ERPAs 1,3, 4				Westchester
	Putnam: Early dismissal of schools				Putnam
4	Westchester: Evacuate - Lakeland Schools; ERPAs 2, 7, 8; Shelter - ERPAs 47, 48, 49, 9	1200	1212	1215	Westchester
	Rockland: Evacuate - ERPAs 30, 31, 40, 41				Rockland
5	Putnam: Evacuate - ERPAs 16, 17, 18, 19, 23	1225	1237	1240	Putnam
6	Rockland: Shelter - ERPAs 33, 34, 35, 36, 37	1312	1324	1327	Rockland
	Putnam: Evacuate - ERPA 20				Putnam
7	Westchester: Shelter - ERPAs 5, 6, 10, 12 Wind shift anticipated (040°, 3-8 m/sec)	1335	1347	1350	Westchester
8	Release	1435	-	1450	
9	Wind Shift	1547	-	1602	
10	Orange: Dismissal of Schools	1612	-	1627	Orange

[a]Simulation

[b]See Section 2.3.1 (Deficiency 1)

[c]No protective action

2 EXERCISE EVALUATION

2.1 NEW YORK STATE

2.1.1 New York State Emergency Operations Center (SEOC)

There were eleven objectives to be demonstrated at the New York State Emergency Operations Center during this exercise. Nine objectives were fully met, one objective was not demonstrated, and one objective was not applicable to the SEOC since it did not require a State response as discussed in the plan.

SEOC 1. The objective to demonstrate the ability to mobilize staff and activate facilities promptly was met. The key personnel in the State Emergency Management Office (SEMO) were called in upon receipt of the Notification of an Unusual Event (NUE) ECL at 0722. Activation of the SEOC was begun at 0845 following notification of an Alert ECL. A written call-list was used to telephone key personnel and have them report to the SEOC and to telephone other personnel to place them on standby. The SEOC was operational at 0932. The remaining staff were called in at 1039 after the SEOC was notified that the plant status had reached Site Area Emergency (1032) and all agencies were represented by 1112.

SEOC 2. The objective to demonstrate the ability to fully staff facilities and maintain staffing around the clock was met. There were representatives from 22 State agencies and the American Red Cross (ARC) present at the SEOC. Around-the-clock staffing was demonstrated by presentation of a roster. There was sufficient clerical help for message handling, duplicating, and other support activities. The entire staff displayed adequate knowledge of emergency procedures.

SEOC 3. The objective to demonstrate the ability to make decisions and to coordinate emergency activities was met. The Commissioner of Health under the auspices of the Disaster Preparedness Commission was effectively in charge. He consulted periodically with key personnel in the SEOC. He was also in contact with the Counties over the Radiological Emergency Communication System (RECS) line for protective action and other decisions. Periodic briefings were held to update the staff on the situation. Message logs were kept for all incoming and outgoing messages.

SEOC 4. The objective to demonstrate the adequacy of facilities and displays to support emergency operations was met. There was adequate space with sufficient furniture and telephones. Access to the SEOC was controlled by security officers and each person entering had to show proper identification and sign in on a roster. There were no problems with the noise level. The facility can support extended operations and backup power is available, although it was not demonstrated. Emergency classification

levels were posted and status boards were maintained. A large electronic monitor, with five alternating screens for information on plant and emergency operation status, was maintained in the operations room; this information was also telecast on video monitors in the command room. However, the information on the screen was sometimes incorrect or outdated. Also, each screen was not posted for a long enough period. If, for example, one wanted to check the history of the evacuated emergency response planning areas (ERPAs), older information had been removed to make room for more current information. The monitor is a redundant system since copies of all messages were distributed in the operations room.

SEOC 5. The objective to demonstrate the ability to communicate with all appropriate locations, organizations, and field personnel was met. The SEOC used communication links with the local EOCs, contiguous states, the licensee (New York State Power Authority), FEMA, Emergency Broadcast System (EBS) stations, the media center, and the Southern district office. The RECS line, a dedicated conference phone line with the licensee, 4 plume EPZ Counties, and the district office worked well. Backup systems with these three consist of radio linkages, the Radio Amateur Civil Emergency Service (RACES), and commercial telephone. The primary means of communication with other agencies is commercial telephone with radio backup. There were three telefax machines available for receipt and transmission of hard copy, one for the public information officer (PIO) from the joint news center (JNC), one for dose assessment, and one in the communications center. In addition, the dose assessment team had access to real time meteorological data via the utilities' Meteorological Information and Dose Assessment System (MIDAS) over a telephone link to a personal computer. There were several copying machines available. Message handling was prompt and efficient.

SEOC 6. The objective to demonstrate the ability to identify the need for, request, and obtain federal assistance was met. As the scenario played out, the management at SEOC determined that there was no need to seek assistance from the federal government. Consequently, the state did not make such a request.

SEOC 7. The objective to demonstrate the ability to project dosage to the public via the plume exposure, based on plant and field data, and to determine appropriate protective actions based on PAGs, available shelter, evacuation time estimates, and all other appropriate factors was met. The state was able to project public exposures based on default source terms and actual plant release data, as well as field readings. Briefings were provided to the SEOC director regarding protective actions in a timely manner. Staff had the ability to conduct dose estimates by hand calculation, calculator, and the MIDAS and IRDAM computer models. The computer models were available on two personal computers, which provided excellent redundancy in the event of hardware failures. Usually dose estimates were calculated by two or three methods simultaneously and could be checked against each other for reasonable agreement with the utility estimates. Discrepancies which were identified were discussed via phone with the emergency operations facility (EOF). Initially, the state estimate using a hand calculator

and the Midas model dispersion estimates differed by a factor of 2 or 3. Once the state dose assessment team identified the problem as its use of miles per hour instead of meters per second, this problem was corrected. It also appeared that utility dose assessments were conducted using a different Pasquall-Gifford dispersion factor than that noted on the data sheets telefaxed from the EOF. It was not determined whether this difference was a mistake or the result of transcription error. However, the difference in dose estimates were minor in comparison to the variability of the dispersion models. Furthermore, the problems were readily identified and corrected.

SEOC 8. The objective to demonstrate the ability to make the decision, based on predetermined criteria, whether to issue KI to emergency workers was met. Use of KI was not recommended, as the dose assessment team determined that projected radioactive iodine exposure would not exceed the protective action guideline for emergency workers in the plume exposure EPZ. This decision was in accordance with the plan.

SEOC 9. The objective to demonstrate the ability to supply and administer KI, if the decision has been made to do so was not demonstrated. A State decision was made that the use of KI was not necessary, consequently, the ability to supply and administer KI was not demonstrated.

SEOC 10. The objective to demonstrate the ability to alert the public within the 10-mile emergency planning zone (EPZ), and disseminate an initial instructional message, within 15 minutes was not applicable to the SEOC. The State involvement in public alerting is limited to interacting and coordinating with the County EOCs in the decision-making process.

SEOC 11. The objective to demonstrate the ability to provide advance coordination of information released was met. The State Public Information Office located at the SEOC was in telephone contact with the PIO at the JNC. They coordinated information prior to release. Copies of all EBS messages and news releases were telefaxed to the SEOC.

DEFICIENCIES

There were no Deficiencies observed at the SEOC during this exercise.

AREAS REQUIRING CORRECTIVE ACTION

There were no Areas Requiring Corrective Action observed at the SEOC during this exercise.

AREAS RECOMMENDED FOR IMPROVEMENT

1. **Description:** There was no status board in the operations room that contained a full listing of events.

   Recommendation: A permanent status board should be installed in the operations room to provide a history of all pertinent events (including sounding of sirens) and EBS messages) at all times.

2. **Description:** The electronic monitor with five alternating screens occasionally had incorrect or outdated information, and the display time was too short to check sheltered or evacuated ERPAs.

   Recommendation: The monitor screens should be checked more frequently for accuracy and timeliness. The display time should be increased to about 15 seconds.

3. **Description:** There was an initial discrepancy between hand-calculated and MIDAS-calculated dose assessments due to the use of miles per hour instead of meters per second for MIDAS by the dose assessment team.

   Recommendation: An adjustment should be made to the MIDAS program so that the printout has the wind speed available in meters per second; alternatively, a conversion factor should be built into the program for miles per hour.

2.1.2 Southern District Emergency Operating Center (SDEOC)

The five objectives to be demonstrated at the New York State SDEOC during this exercise were fully met.

SDEOC 1. The objective to demonstrate the ability to mobilize staff and activate facilities promptly was met. The SDEOC in Poughkeepsie began activation procedures at 0852 following notification and verification that an Alert ECL had been declared at Indian Point. The staff was mobilized using a written call-list. The facility was declared operational at 0900.

SDEOC 2. The objective to demonstrate the ability to fully staff facilities and maintain staffing around the clock was met. The SDEOC was fully staffed with representatives from 12 State agencies, the ARC, and the USDA. Around-the-clock staffing was demonstrated by presentation of a roster. There was adequate personnel for clerical help, message handling, and other support activities. The entire staff was well trained in emergency procedures.

SDEOC 3. The objective to demonstrate the ability to make decisions and to coordinate emergency activities was met. The assistant regional coordinator assumed command of the SDEOC upon activation. Command was promptly and efficiently transferred to the Regional Director when he arrived at 1000. The Regional Director, designated in the plan to be in charge at the SDEOC, was experienced and demonstrated a high degree of skill. Periodic briefings were conducted and the staff appeared well coordinated. A message log was kept of all incoming and outgoing calls. Message handling was efficient.

SDEOC 4. The objective to demonstrate the adequacy of facilities and displays to support emergency operations was met. The SDEOC is located in a secure bunker. There is adequate space with sufficient furniture and telephones. A remote TV monitor was used to identify persons entering the bunker. With its infirmary, men's and women's dormitory space (each with bunks for 52 people) lavatories, and kitchen, the SDEOC is fully capable of extended operations. There is a backup generator with a two-week supply of fuel. Maps and status boards were posted on the wall in plain view of the staff.

SDEOC 5. The objective to demonstrate the ability to communicate with all appropriate locations, organizations, and field personnel was met. The SDEOC demonstrated the ability to staff and operate a wide range of communications equipment. The RECS line provided a direct hookup to the utility, and the SEOC, and the Counties. A high frequency radio system was available for communication with Albany and other state area offices. An amateur radio system was used, with repeater stations, to maintain communications with local EOCs. There were also backup radio systems and telephones available.

DEFICIENCIES

There were no Deficiencies observed at the SDEOC during this exercise.

AREAS REQUIRING CORRECTIVE ACTION

There were no Areas Requiring Corrective Action observed at the SDEOC during this exercise.

AREAS RECOMMENDED FOR IMPROVEMENT

There were no Areas Recommended for Improvement observed at the SDEOC during this exercise.

2.2 EMERGENCY OPERATIONS FACILITY (EOF)

There were three objectives to be demonstrated at the EOF during this exercise with two being fully met, and one being partially met.

EOF 1. The objective to demonstrate the ability to mobilize staff and activate facilities promptly was met. Representatives from the Counties began arriving shortly after the alert (ECL), were briefed, and established communications. The activation was completed at 1010 with the arrival of the Rockland County liaison.

EOF 2. The objective to demonstrate the ability to fully staff facilities and maintain staffing around the clock was partially met. The EOF was fully staffed in accordance with the plan. The staff displayed adequate knowledge and training concerning their duties. Around-the-clock staffing capability was demonstrated by the State and Rockland County by presentation of a roster; and it was shown by an actual shift change by Westchester and Putnam Counties. Orange County did not demonstrate double staffing or present a roster of second-shift personnel.

EOF 3. The objective to demonstrate the ability to communicate with all appropriate locations, organizations, and field personnel was met.
Communications were established via RECS, commercial telephone, and radio, and were used throughout the exercise. Telefax machines were also available and used extensively. The Westchester County liaison had difficulty in obtaining information from the Westchester EOC and, in one instance, found out about County actions after the state representatives had been informed. The telephone line allotted to Orange County was used by non player personnel and this made it difficult for the Orange County liaison to reach his EOC rapidly. There was a problem with the MIDAS data being provided to the EOCs. It was corrected initially but the problem recurred.

DEFICIENCIES

There were no Deficiencies observed at the EOF during this exercise.

AREAS REQUIRING CORRECTIVE ACTION

1. **Description:** The Orange County representatives did not demonstrate around-the-clock capability either by double staffing or by presentation of a roster at the EOF (NUREG-0654, II, A.4). (Orange County ARCA)

   Recommendation: A demonstration of around-the-clock staffing needs to be performed at the next exercise.

AREAS RECOMMENDED FOR IMPROVEMENT

1. **Description:** The Westchester County representative had problems obtaining information in a timely fashion from the Westchester EOC.

   Recommendation: A telefax of all County actions should be sent to the EOF to provide prompt hard copy of all local actions.

2. **Description:** The commercial telephone line allotted to Orange County was used for other purposes and this made it difficult for the Orange County representative to contact his EOC rapidly.

   Recommendation: The commercial telephone line allotted to Orange County should be solely for the use of the Orange County representative(s).

3. **Description:** The MIDAS data was not initially available to the EOCs and there were periodic problems once it became available.

   Recommendation: Ensure that MIDAS data is available and that it stays so by determining the exact cause of the problem during the exercise and correcting it.

2.3 JOINT NEWS CENTER (JNC)

2.3.1 Exercise Demonstration

There were 7 objectives to be demonstrated during this exercise at the JNC. One objective was not met, four objectives were fully met, and two objectives were partially met. The objective which was not met resulted in a classification of a Deficiency, which was subsequently corrected during a March 29, 1988 remedial drill.

JNC 1. The objective to demonstrate the ability to mobilize staff and activate facility promptly was met. The JNC which is located at the Westchester County airport, is a facility shared by the utility, counties, and State. Beginning at 0807, PIOs from the four affected counties began to arrive, the PIOs from the closest counties arriving first. At 0933, the JNC was declared operational. PIOs from all four Counties were at the JNC and in communication with their respective EOCs via open phone lines. The New York State PIOs arrived no earlier than an hour after the Alert ECL at 0842, in accordance with an agreement that they would not be prepositioned.

JNC 2. The objective to demonstrate the ability to fully staff facilities and maintain staffing around the clock was met. Upon the arrival of the New York State representatives, the JNC was fully staffed. The staff displayed adequate training and knowledge of procedures. Representatives from Westchester and Orange Counties successfully demonstrated a shift change of the lead PIOs. The Westchester shift change took place at 1330 and the Orange County shift change took place at 1230. The second-shift lead PIOs did not arrive until the shift change, and once their replacements were briefed, the original lead PIOs withdrew from the exercise. Around-the-clock staffing was demonstrated by presentation of a roster by the State, Rockland County and Putnam County.

A previous ARCA (JNC 1) from IPNPS Supplement to the PEA Version 2, dated September 16, 1987 has been corrected and was verified during this exercise.

JNC 3. The objective to demonstrate the ability to alert the public within 10-mile EPZ, and disseminate an initial instructional message, within 15 minutes was not met. The schedule for sounding the sirens and issuing the first EBS message was agreed to on the RECS line at 0924. This decision was rapidly communicated to the County PIOs in the Joint News Center. The sirens were sounded by 0936, and the Westchester County lead PIO began reading the EBS message to the EBS station, WABC, at 0939. The station had been put on standby at 0905. Unfortunately, the WABC staffer who took the 0939 call, which began by advising that an EBS message would be read in two minutes, was told incorrectly by the News Director that the call could not be aired live or recorded on that phone line. Consequently, the staffer took the message by writing it in longhand, twice halting the process to complain about the speed of the dictation, and then typed the message for broadcast. The actual message was broadcast at 0959, 35 minutes after the decision was reached.

This Deficiency was corrected and verified by FEMA during the March 29, 1988, EBS remedial drill (see Sec. 2.3.2).

JNC 4. The objective to demonstrate the ability to formulate and distribute appropriate instructions to the public in a timely fashion was partially met. A total of 10 messages were written, approved by the Counties, the State, and coordinated with the utility. Only the first EBS message was actually called in to WABC with the others being simulated. Subsequent to the first EBS message, all EBS messages were issued within the 15-minute time frame. Information in EBS messages were usually clear, complete, and exceptionally well-organized. However, in one instance, protective actions included in the EBS messages were verified at the time of communication with the Putnam County EOC rather than verifying with the County Executive after the message was drafted as specified in the plan. EBS message #5 did not advise people in ERPA #20 to evacuate as it was supposed to. This mistake was caught and the information was included in EBS #6, issued 47 minutes later.

EBS messages included information closings about dismissal of schools in Putnam, Rockland, and Orange Counties. Information concerning the early dismissal of Westchester schools was issued by news release. It may be advisable to mention in the EBS message how to obtain information on schools. In general, considering the critical need for coordination, an outstanding job was done by all.

A previous ARCA (Westchester 7) from IPNPS Supplement to the PEA Version 2, dated September 16, 1987 has been corrected and was verified during this exercise. A previous ARCA (JNC 4) remains uncorrected and requires demonstration at the next Indian Point exercise.

JNC 5. The objective to demonstrate the ability to brief the media in a clear, accurate, and timely manner was met. During the exercise, nine press briefings were held. The lead PIO from each of the four counties and the utility participated in the earlier press briefings. After the state PIOs arrived, they participated in all subsequent briefings. Briefings were conducted in an outstanding manner, with earlier events being summarized, recent protective action recommendations explained, and questions answered. EBS messages and news releases were distributed in a timely manner. The ERPA map was used as appropriate, although ERPAs being sheltered or evacuated could have been shaded to provide status "at a glance" for journalists just arriving at the JNC.

JNC 6. The objective to demonstrate ability to provide advance coordination of information released was met. Generally, the coordination among county PIOs, state PIOs, and utility PIOs at the Joint News Center was outstanding. Proper sign-off procedures were used. County and state PIOs staffed open lines back to their respective EOCs. EBS messages and news releases were telefaxed or sent via electronic mail back to the EOCs. PIOs met before each press briefing to prepare for an orderly and informative briefing.

A previous ARCA (JNC 5) from IPNPS Supplement to the PEA Version 2, dated September 16, 1987 has been corrected and was verified during this exercise.

JNC 7. The objective to demonstrate the ability to establish and operate rumor control in a coordinated fashion was partially met. The rumor control system was operated at the JNC in an efficient and effective manner. Rumor control staff answered telephone inquiries generated by a team of callers. The rumor control staff received all EBS messages and news releases in a timely manner. They also identified a number of concerns requiring follow up in accordance with the main purpose of the system. This rumor control is an internal system. The rumor control telephone number is supplied to government and utility offices so that their workers can obtain information to be passed on to people calling these offices. These workers would also call rumor control to report unconfirmed or misleading information which comes to their attention. Based on a limited number of test calls placed to county offices, it appears that the rumor control telephone number was available to appropriate personnel. However, Orange County did provide the rumor control number in their news release issued at 0848. This is a deviation from the rumor control policy of not providing the number to the public and press. If the rumor control number were readily available, the rumor control system would be quickly flooded with calls and become virtually inoperable. The media-monitoring part of the rumor control system enables staff to listen to area radio stations and view television stations to identify erroneous or misleading news stories.

A previous ARCA (JNC 3) from IPNPS Supplement to the PEA Version 2, dated September 16, 1987 has been corrected and was verified during this exercise.

DEFICIENCY

1. Description: The initial EBS message would have taken 35 minutes to air. It is required to be aired in 15 minutes. This occurred because the staff at WABC did not follow EBS procedures, which were drafted in 1981 (NUREG-0654, II, E.6). Please note that this deficiency is a State Deficiency, even though activities occurred at the JNC and WABC.

   Recommendation: A new plan should be drawn up, including the current hot line number and all other changes and necessary information. The staff at WABC should be given additional training so that they are aware that in an emergency (1) an EBS message would be broadcast live over the hot line, and (2) the message would also be simultaneously recorded. All staff who could be on duty during an emergency should be aware of these two procedures and of where a WABC plan is kept. Several people at the JNC should be knowledgeable of WABCs procedures, so that they can guide WABC personnel by telephone, if need be.

   Note: This Deficiency was corrected during the March 29, 1988, EBS Remedial Drill (see Sec. 2.3.2).

AREAS REQUIRING CORRECTIVE ACTION

1. **Description:** The rumor control number is for internal emergency workers use, yet Orange County gave it out to the public in a news release at 0848. If this number is readily available, the rumor control system would be quickly flooded with calls and become inoperable (NUREG-0654, II, G.4.c).

   Recommendation: The rumor control number should not be provided to the public and all PIOs should be aware of this policy.

2. **Description:** EBS message #5 did not advise people in ERPA #20 to evacuate as it was supposed to. This mistake was caught and the information was included in EBS #6, issued 47 minutes later. (NUREG-0654, II, G.4.b).

   Recommendation: The content of EBS messages need to be reviewed and verified by the County Executive after the EBS message has been drafted and prior to release

3. **Description:** Some school information was issued only via news releases and there was no information on EBS on how to obtain additional information on schools.

   Recommendation: A brief message should be included in the EBS message on how to obtain information on schools.

AREAS RECOMMENDED FOR IMPROVEMENT

1. **Description:** The ERPA map at the JNC was used for briefings and protective actions were described. However, ERPAs being evacuated or sheltered were not depicted on the map.

   Recommendation: Colors or shading should be used so that evacuated and sheltered ERPAs can be identified at a glance.

2.3.2 EBS Remedial Drill

On March 29, 1988, a remedial drill was conducted to verify correction of the deficiency identified at the JNC during the March 22nd exercise (see Sec. 2.3.1). One objective was designated for demonstration:

- Demonstrate the ability to disseminate to the public an initial instructional message coordinated with siren sounding.

These drill guidelines were to be followed during the remedial demonstration:

1. Sounding of the sirens, at about 1230, will be coordinated by the Westchester County EOC.

2. Westchester County EOC will coordinate with the Westchester County PIO located at the JNC.

3. Westchester County PIO will contact WABC radio to put them on standby and then to air EBS message.

4. WABC will air a prerecorded EBS message at direction of Westchester County PIO about 3 minutes after siren sounding.

Three federal evaluators from FEMA participated in the remedial drill with assignments as follows:

J. O'Sullivan	WABC Radio
B. Acerno	Westchester County EOC
L. Biliski	Joint News Center

The JNC notified station WABC at 1215 and put them on standby to await further communications. At 1225 the station received a telephone call from the JNC which informed them that the sirens would be sounded (simulated) at 1230 and the EBS message should be aired immediately following the siren sounding. The 1225 telephone call was not interrupted and contact was maintained between the JNC and the radio station for the duration of the siren sounding.

Broadcast of the EBS message was initiated at 1233 and the message ended at 1234. The activities demonstrated during the remedial drill were sufficient to correct the deficiency identified during the March 22, 1988, exercises.

2.4 WESTCHESTER COUNTY, NEW YORK

2.4.1 Westchester County Emergency Operations Center (WEOC)

There were thirteen objectives to be demonstrated by the Westchester County EOC during this exercise. One objective was not met (See Section 2.3.1, Deficiency 1 and JNC 3), ten objectives were fully met, and two objectives were partially met.

WEOC 1. The objective to demonstrate the ability to mobilize staff and activate facilities promptly was met. The Westchester County Warning Point (WP) is located at the Westchester County Department of Public Safety in Hawthorne and is staffed around the clock, every day. The WP contains the county Sheriff's communications center, including the RECS line. The call from the IPNS Reactor Operator with the NUE ECL was received at 0724 via the RECS line. Messages were copied onto the New York State Radiological Emergency Data Form and receipt of the message was verified.

In accordance with plan procedures, the County Executive was notified immediately. His instructions were to have everyone report to the WEOC. Instead of Attachment 3 [Alert list for Unusual Events], he directed the desk officer to use the written call lists contained in Attachments 4 and 5 of Procedure 2. Each of the 34 designated county officials was called immediately with instructions to report to the WEOC. Proper communication protocol was used in explaining the exercise situation at the facility. Several county police officers who had just reported for roll call assisted the desk officer. Most of the WEOC staff were reached at home, but others were in transit to their normal places of employment. For those not contacted directly, messages were left either with secretaries or on pager systems to immediately contact the WP for instructions. The notification of all agency representatives proceeded smoothly and was completed by 0751. The staff responded quickly and the WEOC was declared operational at 0840.

The call lists used at the WP to notify staff were different from those contained in the Attachments to Procedure. Names and telephone numbers were different in some cases, and so were the effective dates of the lists. For example, those lists in Procedure 2 were dated 1/88; those at the WP were dated 12/16/87; and those at the EOC were dated 03/01/88. Discussions with county representatives clarified the need and reasons for the frequent list updates. However, it was not clear why the WP, which is the key position for initial notification, had the oldest list. It must be pointed out, however, that the discrepancies between lists apparently had no negative impact on the county's ability to alert and notify the EOC staff. It is recommended that action be taken to ensure the WP has the current list. Therefore, previous ARCA 1 Westchester County remains inadequate.

The decision by the County Executive to instruct the staff to report to the EOC at the NUE is not identified as a standard option in the plan. Mobilization of the full EOC staff and activation of the EOC only become options at the Alert stage. It is recommended that if full mobilization of staff and activation of the EOC is the standard procedure at the NUE, the plan should be revised to reflect this procedure. However, if

full staffing and activation of the EOC is merely a convenient option during an exercise, it precludes evaluation of response times and results only in prepositioning of staff. This planning issue needs to be addressed in the next submission of the off-site Westchester County Radiological Emergency Response Plan for evaluation by the RAC.

WEOC 2. The objective to demonstrate the ability to fully staff facilities and maintain staffing around the clock was met. The WEOC was fully staffed by 0900. The organizations represented were in accordance with the plan and were verified with the sign-in log maintained by the security guard at the EOC entrance. The operations staff were well trained and knowledgeable of emergency procedures. Around-the-clock staffing was demonstrated by presentation of a roster. In addition, most of the agencies in the operations area were double-staffed. The number of personnel assigned to the dose assessment area was appropriate and each had a specific assignment. Each individual was well-trained and performed his/her respective responsibilities well. The County Executive demonstrated a shift change through replacement by his deputy for several hours during the exercise.

A previous ARCA (Westchester 2) from IPNPS Supplement to the PEA Version 2, dated September 16, 1987 has been corrected as a result of the submittal of the January 29, 1988 annual letter of certification and subsequent review by FEMA Region II.

WEOC 3. The objective to demonstrate the ability to make decisions and to coordinate emergency activities was partially met. The County executive was clearly in charge of the EOC and was in control of all county operations. He remained aware of activities occurring in the county and took responsibility for them. With his command room staff, he reviewed protective action options based on thorough briefings and made appropriate and independent decisions. He initiated many of the discussions with the state and other counties that resulted in decisive actions. In coordination with the County Civil Defense Director, he conducted periodic briefings to keep the operations staff up-to-date on the overall emergency response. The County Executive constantly involved various representatives of county agencies in decision making.

When the WEOC was informed that a sample had been taken for measurement of airborne radioiodine concentrations by the field monitoring team, they directed the team to remain at the sampling point. However, the sampling point was located within the plume, needlessly exposing team members, so the field monitoring team relocated themselves to an area outside the plume boundary.

WEOC 4. The objective to demonstrate the adequacy of facilities and displays to support emergency operations was met. The resources and facilities at the WEOC were adequate for emergency operations. Access to the EOC was restricted by a security guard. Sign-in procedures were strictly enforced. The WEOC was comprised of four separate rooms, each supporting a functional group; the Command and Control Room, the Operations Room, the Communications Room, and the Dose Assessment Room. Each agency was allocated adequate space, a telephone, and a copy of agency procedures.

However, crowding would have been less of a problem had most agencies not double-staffed. Status boards were present in each room and were kept up-to-date. The board in the Communications Room is more correctly referred to as an event log for actions initiated by the communications team (e.g., siren activation times), and not a status board, per se.

All necessary and required maps and charts were displayed in each room of the EOC. For the most part, they were all revised in 1987 and supersede those contained in the Westchester County plan. **This planning issue needs to be addressed in the next submission of the off-site Westchester County Radiological Emergency Response Plan for evaluation by the RAC.**

Dose assessment facilities were excellent. Sufficient space was devoted to the dose assessment room, which was capable of being isolated from the rest of the EOC activities. The displays, charts, maps, and overlays used for tracking the plume were excellent. The status boards were kept current. Protective action recommendations were posted on a separate board and kept up-to-date.

A previous ARCA (Westchester 3) from IPNPS Supplement to the PEA Version 2, dated September 16, 1987 has been corrected and was verified during this exercise.

WEOC 5. The objective to demonstrate the ability to communicate with all appropriate locations, organizations, and field personnel was partially met. Overall communications were demonstrated to be excellent. Primary systems were appropriately backed up. In nearly every case, the primary and secondary systems were utilized during the exercise. In some cases, even tertiary radio systems were used. Messages were received, transcribed, duplicated, and distributed efficiently. The conferencing capability of the RECS line was used effectively between all key locations. Due to a brief outage of the RECS line, Westchester County could not be involved in the discussions regarding protective actions in Putnam County (EBS message #5). Although involvement of the county was effected by thorough backup systems, these sporadic outages should be investigated and resolved immediately. The telefax machine operated well during the exercise. It linked the WEOC with the state, other counties, the EOF, the JNC, and the Southern District. However, Westchester County did not provide timely protective action decisions to Dutchess County. For example, at 1415, Dutchess County requested a status report from Westchester County. At that time, Dutchess County learned of the protective actions that had been implemented for ERPAs 2, 7, 8, 9 and 10. At 1200, the decision had been made to evacuate ERPAs 2, 7 and 8. Such oversights can be easily avoided in the future by implementing one of the following remedies: (1) including Dutchess County on the RECS line; (2) assigning a Westchester Operations person to provide protective action decisions to Dutchess County; or (3) deploying a liaison officer from Dutchess County to the Westchester County EOC. **This planning issue needs to be addressed in the next submission of the off-site Westchester County Radiological Emergency Response Plan for evaluation by the RAC.**

Communications between the WEOC and the field monitoring teams were often interrupted and overridden by other non-exercise related transmissions from other county agencies using the same radio frequency. The frequency used by the field monitoring

teams was shared with the County Department of Corrections, Department of Parks, Department of Public Works, and the digital encoder used to activate the emergency siren system. While this did not impede the activities of the field monitoring team during the exercise, this interruption could result in a serious problem if it should remain uncorrected. This planning issue needs to be addressed in the next submission of the off-site Westchester County Radiological Emergency Response Plan for evaluation by the RAC.

A previous ARCA (Westchester 29) from IPNPS Supplement to the PEA Version 2, dated September 16, 1987 remains uncorrected and requires demonstration at the next Indian Point exercise.

WEOC 6. The objective to demonstrate ability to project radiation dosage to the public via plume exposure, based on plant and field data, and to determine appropriate protective measures, based on PAGs, available shelter, evacuation time estimates, and all other appropriate factors was met. All aspects of dose assessment were handled efficiently and in a professional manner. The number of persons assigned to dose assessment was optimal. All were well-trained, supervision was excellent, and all displayed an enthusiasm to demonstrate their capabilities. A person trained in dose assessment was stationed at the IPNS facility who transmitted dose-related data directly to the WEOC by telephone. This information was generally received several minutes before the data was available over RECS. The data were promptly converted into dose estimates by computer, passed on to the Radiological Officer and posted on the status boards. These estimates were checked by at least three trained individuals using hand calculators. The dose assessment group factored in field data to check the calculations. The Radiological Officer used the data in formulating necessary protective action recommendations (PARs).

PARs made by IPNS were verified and concurred with by the county dose assessment group, and were then passed on to the decision makers. Protective actions were put into effect early, but were appropriate in view of the developing plant conditions, meteorological parameters, and populations within sectors projected to be affected. PARs and dose estimates were continually updated and reevaluated as new data became available.

The field monitoring team was used to locate, define, and monitor conditions within the plume. The plume's location and status were monitored effectively and the data transmissions were recorded promptly.

WEOC 7. The objective to demonstrate the ability to alert the public within the 10-mile EPZ, and disseminate an initial instructional message, within 15 minutes was not met due to a New York State Deficiency (See Section 2.3.1, Deficiency 1 and JNC 3). Public alerting was effectively coordinated and demonstrated under the direction of the County Executive. Protective actions were anticipated and discussed with the Health Director and other appropriate operations staff. Options were weighed and issues regarding implementation were resolved. After a county position regarding the need to

implement protective actions was established, coordination with the state and other counties was accomplished in conference on the executive hotline. Message content, siren sounding (simulated), and EBS air times were synchronized with each jurisdiction. All activations of sirens (simulated) and specific air time for all EBS messages subsequent to EBS message 1 were within the prescribed 15-minute interval from the decision time. When protective actions were implemented, the decisions were announced to the operations staff. Each agency with emergency responsibilities was directed to implement their respective procedures. When received over the facsimile machine, EBS messages were read to the operations staff. The EBS messages and all news releases were posted on the bulletin board located at the PIO station.

A previous ARCA (Westchester 6) from IPNPS Supplement to the PEA Version 2, dated September 16, 1987 has been corrected as a result of the submittal of the January 29, 1988 annual letter of certification and subsequent review by FEMA Region II. A previous ARCA (Westchester 8) from IPNPS Supplement to the PEA Version 2, dated September 16, 1987 has been corrected and was verified during this exercise.

WEOC 8. The objective to demonstrate the ability to provide advance coordination of information released was met. The County PIO worked closely with the PIO staff at the other jurisdictions. It was observed that all locations (EOCs, EOF, and JNC) shared information in an efficient and expeditious manner. Information for public release was coordinated and reviewed with the JNC prior to release. Information was exchanged by telephone and telecopier. The telecopiers worked very well during this exercise. The county provided information for news releases; however, actual preparation was performed at the JNC. The public instructions were clear and in accordance with the information supplied to the public in brochures. The ERPAs were identified by ERPA number and local name. The messages included instructions for sheltering and evacuation routes. Information and instructions were repeated, collectively by jurisdiction, in each subsequent EBS message. It was observed that all locations (EOCs, EOF, and JNC) shared information in an efficient and expeditious manner. Press interviews were conducted at the JNC; however, the county was prepared to handle press inquiries when necessary.

WEOC 9. The objective to demonstrate the organizational ability and resources necessary to manage an orderly evacuation of all or part of the plume EPZ was met. At the Alert ECL, vehicles were dispatched (simulated) to run all potential evacuation routes to determine the presence of problems or impediments prior to the event of ordering an evacuation. Units were placed in position at dispatch points in anticipation of an evacuation. Coordination among several agencies including the Coast Guard, CAP, and DOT resulted in the simulated closing of the Hudson River, Metro North commuter line, and air traffic. Representatives from the law enforcement agencies discussed anticipated traffic densities with the Director and how to effect smooth egress from the affected ERPAs.

WEOC 10. The objective to demonstrate the organizational ability to deal with impediments to evacuation, such as inclement weather or traffic obstruction was met. A free-play message was introduced to simulate the insertion of a traffic obstruction. Discussion between the County Police, State Police, Department of Public Works and Department of Transportation demonstrated the ability to coordinate activities for removal of the impediment.

WEOC 11. The objective to demonstrate the organizational ability necessary to control access to an evacuated area was met. Traffic control points (TCPs) were promptly ordered with TCPs actually established for Blue C-2 and Red D-2. Traffic control points were moved sequentially throughout the exercise to reflect new conditions, changes in traffic flow, and successfully evacuated ERPAs.

WEOC 12. The objective to demonstrate the ability to supply and administer KI, once the decision has been made to do so, was met. Personnel within the dose assessment group were aware of the procedures regarding the distribution of KI and the individual responsible for authorizing the administration of KI. Even though the State determined that radioactive releases from IP-3 were not substantial enough to require administration of KI, emergency workers were provided KI with their dosimetry before dispatch to the field. Discussions in the Command Room between the County Executive and the Commissioner of Health demonstrated an ongoing consideration of the need to authorize the administration of KI if conditions changed.

An adequate supply of KI was available for distribution to emergency workers. Twenty-five boxes of 100 bottles each (14 tablets per bottle) were available in the Health Department's storeroom. The KI had an expiration date of August 1987; however the date had been extended for one year in a letter from Wallace Laboratories to Consolidated Edison dated November 9, 1987.

WEOC 13. The objective to demonstrate the ability to effect an orderly evacuation of on-site personnel was met. At 1101, Westchester County received a telephone call from IPNS coordinating activities for the evacuation of all nonessential workers. This action involved 200 of the 300 plant workers. Most workers had their own transportation and were directed to follow signs from the plant. For those employees without cars, buses would be provided from the plant gate to the reception center. Bus route #1 was activated at 1130, 29 minutes after the decision to evacuate the plant. In the event essential personnel were evacuated, they were to be transported by bus with police escort to the alternate EOF.

DEFICIENCIES

There were no Deficiencies observed at the WEOC during this exercise.

AREAS REQUIRING CORRECTIVE ACTION

1. **Description:** When the WEOC was informed that a sample had been taken for measurement of airborne radioiodine concentrations by the field monitoring team, they directed the team to remain at the sampling point. However, the sampling point was located within the plume, needlessly exposing team members so the field monitoring team relocated themselves to an area outside the plume boundary. (NUREG-0654, II, A.1.d, A.2.a).

   Recommendation: Individuals responsible for decision making and the coordination of emergency activities require additional training in the determining the plume EPZ in order to properly determine location of field monitoring teams.

2. **Description:** The call lists that were used by personnel at the Westchester County Warning Point to notify the staff listed different names for some of the positions than the lists contained in Procedure 2.

   Recommendation: The entire set of call lists in the plan at the County Warning Point should be reviewed and corrected as necessary.

AREAS RECOMMENDED FOR IMPROVEMENT

There were no Areas Recommended for Improvement observed at the WEOC during this exercise.

2.4.2 Field Monitoring Teams

All four objectives to be demonstrated by the field monitoring teams were fully met.

WCFA 2. The objective to demonstrate the ability to mobilize and deploy field monitoring teams in a timely manner was met. Westchester County activated and deployed one radiological field monitoring team to collect samples and make field measurements. The team deployed out of the Westchester County Health Department at 0935 following a thorough briefing on plant and meteorological conditions and individual assignments. The team used a written check-list to verify the required field equipment and were packed and prepared for rapid deployment.

WCFA 3. The objective to demonstrate appropriate equipment and procedures for determining ambient radiation levels was met. Team members displayed adequate

skills in the use of equipment and were familiar with the area, arriving at the various sampling points within a reasonable amount of time. Generally, procedures were followed in the operations of equipment; however, the team did not use plastic bags to protect the equipment from contamination while sampling in the plume area. The team was aware of the importance of taking different measurements from inside and outside their vehicle while traversing the plume.

A previous ARCA (Westchester 28) from IPNPS Supplement to the PEA Version 2, dated September 16, 1987 has been corrected and was verified during this exercise.

WCFA 4. Demonstrate appropriate equipment and procedures for measurement of airborne radioiodine concentrations as low as 10^{-7} µCi/CC in the presence of noble gas was met. Air samples were collected using approved procedures and inventoried prior to transport to a laboratory for further analysis. The air pump used to draw air over the sample collection cartridge is calibrated on a yearly basis.

WCFA 11. The objective to demonstrate the ability to communicate with all appropriate locations, organizations, and field personnel was met. Communications between the field monitoring team and the WEOC were established and maintained during the team's involvement in the exercise. A radio person with his RACES equipment was with the team to act as a backup whenever the team was located in a dead spot in the primary radio system. The communications with the WEOC were interrupted several times by transmissions from other county agencies using the same radio frequency. This did not impede the activities of the team during this exercise (See Sec. 2.4.1, Objective WEOC-5).

A previous ARCA (Westchester 42) from IPNPS Supplement to the PEA Version 2, dated September 16, 1987 has been corrected as a result of the submittal of the January 29, 1988 annual letter of certification and subsequent review by FEMA Region II.

DEFICIENCIES

There were no Deficiencies observed in the field monitoring teams.

AREAS REQUIRING CORRECTIVE ACTION

There were no Areas Requiring Corrective Action observed in the field monitoring team.

AREAS RECOMMENDED FOR IMPROVEMENT

1. **Description:** The Westchester County field monitoring team did not use plastic bags to protect their equipment from possible contamination while sampling in the plume area.

Recommendation: Team members should receive additional training in procedures for reducing the potential spread of contamination.

2.4.3 Field Activities

All seven objectives to be demonstrated for field activities were fully met.

WCFA 1. The objective to demonstrate the ability to mobilize staff and activate facilities promptly was met. A single general population bus route was requested during the exercise for actual demonstration through a free-play message which was introduced in the WEOC at 1152. Activation and staffing was initiated at the Hendrick Hudson School District dispatch point. The transportation manager was knowledgeable in activation procedures and notified his staff promptly using a written call list. The roster listed primarily home telephone numbers, but many of the drivers work for the school district and are readily contacted during working hours. A number of alternate drivers were also listed.

For the reception center, actual mobilization and activation was run out of sequence because school was in session. Notification of staff was accomplished by following a written call list. Both home and work telephone numbers were included for each person on the list. Staff were notified at 1330. All participants reported to the reception center by 1500. The reception center was declared activated at 1545. A roster representing the second shift was also presented.

WCFA 5. The objective to demonstrate the organizational ability and resources necessary to manage an orderly evacuation of all or part of the plume EPZ was met. An actual demonstration occurred in the deployment of an evacuation bus for the general population and for back-up route alerting. Both demonstrations were triggered by the introduction of free-play messages at the WEOC.

The driver for each general population evacuation route is to obtain an information packet specific to his route. The packet contains a detailed map of that route to the reception center, with all bus stops indicated. The bus driver demonstrated his knowledge of the route (GPO22) and the location of the reception center. The route was initiated by 1215 and completed at the reception center at 1313. The transportation manager discussed how maps had been corrected.

Route alerting was initiated when free-play message #4 was introduced at the EOC at 1232 for an estimated 1300 demonstration. The message indicated that siren #61 had failed to activate. The notification was received by radio at 1250 in Yorktown and verified by telephone. Due to non-exercise police activity, the squad car dispatched was not equipped with a public address system. However, most of the squads are PA-equipped and would be used during a real incident. The officer in the squad car dispatched followed the prescribed route using a route map. The route was driven at the prescribed pace and the prescripted message was read. The message the officer read was

complete and included the radio station name and call letters. The officer was able to correctly answer questions regarding his responsibilities and demonstrated knowledge of his personal dosimetry.

Previous ARCAs (Westchester 36 and 37) from IPNPS Supplement to the PEA Version 2, dated September 16, 1987 has been corrected and was verified during this exercise.

WCFA 6. The objective to demonstrate the organizational ability and resources necessary to control access to an evacuated area was met. At 1019, a free-play message was introduced at the WEOC requesting establishment of TCPs BLUE C-2 and RED D-2.

Location BLUE C-2 was not observed because the evaluator did not arrive at the TCP location prior to demonstration. The officers assigned to that TCP were interviewed by the evaluator at the county police headquarters, and documentation was reviewed. According to the Department log, the New York State Police arrived at TCP BLUE C-2 at 1030, set up, and staffed it from 1035 to 1155. The Yorktown Department of Public Works delivered signs at 1055. Officers were equipped with both dosimeters and read and recorded the values. They were supplied with KI and were familiar with KI procedures. They remained in radio contact with the other TCPs and the WEOC over the state police radio.

Interviews with the officers assigned to TCP RED D-2 indicated they received adequate training to execute their function. They had knowledge of dosimetry and KI procedures. They correctly explained the rerouting of traffic, direction of flow, and the direction to the reception center. The Cortlandt Department of Public Works delivered signs to the TCP at 1049 and dismantled them at 1125.

WCFA 9. The objective to demonstrate the adequacy of procedures for registration and radiological monitoring of evacuees was met. Registration, processing, and radiological monitoring of evacuees and vehicles was conducted in an efficient and professional manner. Bilingual signs (English and Spanish) were conspicuously posted at key locations. Proper use of signs was demonstrated at the Ardsley Middle School. All staff were well-trained. Upon entering the center, the evacuees were immediately greeted and ushered into the monitoring area.

The procedures for registering and monitoring evacuees began at 1500. The evacuees were monitored and only their names were recorded to facilitate rapid processing. After monitoring and decontamination, but prior to proceeding to the congregate care center, additional personal details were obtained. For the demonstration, two individuals were responsible for processing and monitoring. An additional six monitors were present in the event of a large influx of evacuees. The total of eight monitors was sufficient to monitor 20% of the Westchester County population within the 10-mile EPZ within 12 hours of arrival, which could be expected to arrive at this reception center. This calculation was based upon the demonstrated monitoring time of three and one-half minutes per person. Correct monitoring procedures were demonstrated and adequate equipment was available. Paper paths directed the flow of

evacuees. Care was taken to keep contaminated and clean individuals separated. A separate decontamination area was set aside. If found to be contaminated, the evacuees were escorted to the locker room where trained individuals assisted the evacuee, issued new clothes and provided direction to the congregate center. The decontamination area was fully stocked with the necessary supplies. Provisions for securing and preventing the spread of contamination from personal belongings were demonstrated.

The decontamination team responsible for the private automobiles performed very well. Two police officers directed vehicle flow. Two monitors thoroughly checked each car. In the event a vehicle was found to be contaminated, it was sent to be cleaned and parked by two other emergency workers. Equipment was also available to monitor large vehicles (e.g., school buses). During the demonstration, they had the opportunity to monitor almost twenty vehicles. All participants performed in a professional manner.

Previous ARCAs (Westchester 38, 39, 40 and 43) from IPNPS Supplement to the PEA Version 2, dated September 16, 1987 have been corrected and were verified during this exercise.

WCFA 10. The objective to demonstrate the adequacy of facilities for mass care of evacuees was met. The congregate care center was staffed by personnel from the Department of Social Services and the ARC. These individuals were experienced and well prepared for the exercise. The congregate care center could accommodate approximately 750 evacuees. Adequate parking, secure storage and sanitary facilities were available. The center was equipped to accommodate handicapped individuals. Approximately 200 cots and blankets were available from the local ARC chapter. However this would not be enough to support the anticipated number of evacuees. Additional sleeping accommodations would have to be borrowed from neighboring ARC chapters, but 36-48 hours would be required to assemble an adequate supply.

In the event of overflow, the Department of Social Services had a list of additional schools that could be activated. Overflow evacuees would be registered and seated in the auditorium until buses arrived to transport them to the new location.

WCFA 11. The objective to demonstrate the ability to communicate with all appropriate locations, organizations, and field personnel was met. Communication capabilities were demonstrated at the reception center, general population bus and dispatch office.

Two amateur radio stations and numerous telephones were available and demonstrated to be operational. This capability provided access to any of the emergency locations. Contact was maintained throughout the exercise with the WEOC and other locations. The reception center administrator and the PMC coordinator each maintained communications logs and were in frequent contact with their staff. Several of the reception center staff were equipped with small headset radios which proved to be very useful for local communication. Several of the vehicles were radio-equipped, which provided additional support for the other field activities.

All buses were equipped with two-way FM radios. Radio reception was very good over long distances. Some problems were encountered in hilly areas, but the drivers were aware of the problem. When "dead spots" were encountered, the driver demonstrated the backup telephone. The dispatcher maintained contact with the drivers and with the WEOC throughout the exercise.

WCFA 12. The objective to demonstrate the organizational ability and resources necessary to effect an orderly evacuation of schools within the plume EPZ was met. At 1229 a free-play message was interjected into the WEOC, requesting a bus be dispatched from Liberty Lines Transit to evacuate the Blue Mountain Middle School. The bus was dispatched from the Liberty Lines garage in Yonkers at 1237. The bus driver was very familiar with his route and had no difficulty following it. The driver wore his emergency identification badge and was equipped with dosimeters. He read the dosimeters every 15 minutes and recorded the values each time. The driver was supplied with KI and explained the procedures in depth. Telephone contact with the dispatch point was maintained throughout the demonstration. The telephone system worked well and the quality of the communications was very good. Upon arrival at the Blue Mountain Middle School, the driver simulated evacuation and notified the dispatcher that everything was under control. The driver explained that in the event of a breakdown, he would notify the dispatcher and a second bus would be deployed. In fact, the Liberty Lines bus did sustain a flat tire at 1315 in Ossining. A relief bus from White Plains was sent to pick up the evaluators and complete the route. The evacuation was completed when the bus arrived at Mamaroneck Avenue School (reception center) in White Plains.

DEFICIENCIES

There were no Deficiencies observed for field activities during this exercise.

AREA REQUIRING CORRECTIVE ACTION

There were no Areas Requiring Corrective Action observed for field activities during this exercise.

AREA RECOMMENDED FOR IMPROVEMENT

1. **Description:** Approximately 200 cots and blankets were available from the local ARC chapter, not enough to support the anticipated number of evacuees. Additional sleeping accommodations would have to be borrowed from neighboring ARC chapters, but 36-48 hours would be required to assemble an adequate supply.

   Recommendation: An inventory of sleeping accommodations within the local region should be conducted to determine the resources available. Formal agreements should be implemented to ensure an appropriate number can be procured within 24 hours.

2.4.4 Emergency Worker Radiological Exposure Control

Two objectives were demonstrated for Westchester County emergency worker radiological exposure control during this exercise. One objective was fully met, and one objective was partially met.

WCFA 7. The objective to demonstrate the ability to continuously monitor and control emergency worker exposure was partially met. The field monitoring team members from Westchester County were supplied with the required dosimetry equipment: 0-200 mR and 0-5 R direct-reading dosimeters and a permanent record TLD. The personnel knew the required frequency at which to read and record the dosimeter values. They were also aware of the maximum allowable exposure dosages without requesting further authorization. The team members were aware of the location of the decontamination center.

The RACES operator who accompanied the field monitoring team to provide backup communications was issued the same dosimetry equipment as the field monitoring team. However, the RACES operator was not aware of the maximum allowable dosages or who could authorize exposure above the established limits. Additional training is indicated for those RACES operators who will accompany the field monitoring team in support of Westchester County's operations.

The police officer assigned to back-up route alerting was familiar with the basic principles of dosimetry. He had the required dosimeters and was aware of exposure limits and procedures for reporting.

The police officers assigned to the traffic control point had a low-range (0-200 mR) and high range (0-5 R) dosimeters and film badges. Instructions and record charts were issued with the dosimeters. The officers were instructed to read the dosimeter and record the values every 15 to 30 minutes. They were familiar with the procedures for reporting the receipt of an excessive radiological dose.

Each bus driver for the general evacuation was provided a kit specific to his route. Each kit contained the required items and was compared against a checklist. In general, it appeared the drivers were aware of the proper procedures and usage of the equipment. The drivers performed adequate dosimeter checks at the proper time intervals. In a period of 1.25 hours, the driver checked both dosimeters only 3 times. The drivers were aware of the need to report their readings and to request instructions. However, they were not clear on the limits to exposure. It is suggested that the limits to exposure could be indicated on the checklists or record cards for quick reference.

At the reception center, each PMC monitor had the required equipment in their respective Emergency Worker kits. PMC personnel wore jump suits and gloves and care was exercised to prevent cross-contamination. All had their direct-reading dosimeters and TLD badges. Each recorded their dosimeter readings every 15 minutes. All individuals were knowledgeable of their respective assignments and roles.

The bus driver for the school evacuation demonstration was equipped with low (0-200 mR) and high (0-200 R) dosimeters. The driver knew how to read the dosimeters

and record the values. This was done at 15-minutes intervals. He was knowledgeable of the maximum dose allowed without authorization and what to do in the event he received and excessive dose. He was also aware of the decontamination process.

Previous ARCAs (Westchester 57, 58, 65 and New York State 14) from IPNPS Supplement to the PEA Version 2, dated September 16, 1987 have been corrected and were verified during this exercise. ARCA (Westchester 62) has been partially corrected and is being rewritten to reflect the continuing need for the reading of dosimeters at proper intervals for general population bus drivers.

WCFA 8. The objective to demonstrate the ability to supply and administer KI, if the decision has been made to do so was met. Emergency workers were aware of the procedures regarding the distribution of KI and the individual responsible for authorizing the administration of KI. Even though the State determined that radioactive releases from IP-3 were not substantial enough to require administration of KI, emergency workers were provided KI with their dosimetry before dispatch to the field.

The field monitoring team was supplied with a sufficient quantity of KI. A letter of approval to extend the shelf life of the KI was contained in the field kits. The team members were aware of who could authorize them to ingest KI.

The police officers assigned to the traffic control point had an adequate supply of fresh KI. The officers were aware of proper procedures regarding the ingestion of KI including the required authorization for administration and recording the dosages taken.

The bus drivers for the general evacuation were provided an adequate supply of KI in their respective kits. The KI had an expiration date of August 1988. They had received instructions and understood the procedures regarding the use of KI. However, the drivers' understanding of the authorization process was limited to knowing that they should take it only upon instructions to do so. It is suggested that refresher training be provided to give a greater understanding of the overall process.

At the reception center, the need for KI is limited since the facility is not in the plume exposure pathway. But KI was present in the Emergency Worker kits. The KI was fresh, with an expiration date of August 1988. The monitors were aware of the proper procedures regarding when to take KI and the necessary authorization for administration.

The bus driver for the school evacuation demonstration was provided an adequate supply of KI. The KI had an expiration date of August 1988. He had received instructions and understood the procedures regarding the use of KI.

DEFICIENCIES

There were no Deficiencies observed in the area of emergency worker exposure control during this exercise.

AREAS REQUIRING CORRECTIVE ACTION

1. **Description:** The RACES operator was not aware of the maximum allowable dosages or who could authorize exposure above the established limits (NUREG-0654, II, K.3.a, K.3.b).

   Recommendation: Additional training should be given to those RACES operators who will likely accompany the field monitoring team in support of Westchester County's operations.

2. **Description:** The bus drivers for the general evacuation were not clear on the limits to exposure (NUREG-0654, II, K.3.a, K.3.b).

   Recommendation: Additional training should be given, and the limits to exposure could be indicated on the checklists or record cards for quick reference.

AREAS RECOMMENDED FOR IMPROVEMENT

There were no Areas Recommended for Improvement observed in the area of emergency worker exposure control during this exercise.

2.4.5 School Interviews

WCFA 12. The objective to demonstrate the organizational ability and resources necessary to effect an orderly evacuation of schools within the plume EPZ was met. The following nine schools in Westchester County were visited and interviews conducted to evaluate the degree of preparedness for each school. Listed are the names of the schools, towns, and the school districts.

1.	Buchanan-Verplank Elementary School	Hendrick Hudson Central School District
2.	Woodside Elementary School, Peekskill, NY	Peekskill City School District
3.	Van Cortlandtville Elementary School, Peekskill, NY	Lakeland Central School District
4.	Carrie E. Tompkins Elementary Schools, Croton-on-Hudson, NY	Croton Harmon School District
5.	Crompond Elementary School, Yorktown Heights, NY	Yorktown Central School District

6.	Claremont Elementary School, Ossining, NY	Ossining Union Free School District
7.	West Orchard Elementary School, Chappaqua, NY	Chappaqua Central School District
8.	Todd Elementary School, Briarcliff Manor, NY	Briarcliff Manor Union Free School District
9.	French Hill School, Yorktown, NY	BOCES

At each school either the principal or the superintendent was interviewed. A preselected series of questions was asked at each school by the federal evaluator.

The parents of school children are notified of the county's protective action decisions regarding the closing of schools through news releases. The authorities interviewed at each of the schools in Westchester County had a good knowledge of the established school emergency procedures. Early dismissal of each of the schools is implemented upon recommendation from the District Superintendent. A written call-down list is used to make telephone calls to parents. The notification list is developed and periodically updated, with current home and emergency telephone numbers of parents, by written request of the schools.

All schools have written procedures and parents are kept informed through school publications which contain the addresses of the designated relocation centers.

All officials interviewed were familiar with the chain of command that would be involved during an evacuation. Estimates of evacuation times and procedures were known.

A previous ARCA (Westchester 68) from IPNPS Supplement to the PEA Version 2, dated September 16, 1987 has been corrected and was verified during the school interviews.

DEFICIENCIES

There were no Deficiencies observed during the school interviews.

AREAS REQUIRING CORRECTIVE ACTION

There were no Areas Requiring Corrective Action observed during the school interviews.

AREAS RECOMMENDED FOR IMPROVEMENT

There were no areas recommended for improvement observed during the school interviews.

2.4.6 Medical Drill

A medical drill for Westchester County was conducted on March 15, 1988, in conjunction with the March 22, 1988 exercise. An individual with simulated contamination and injuries drove himself into the Westchester County reception center to receive treatment. Of the two objectives demonstrated for the Westchester County medical drill one was fully met, and one was partially met.

WCFA 13. The objective to demonstrate the adequacy of ambulance facilities and procedures for handling contaminated individuals was met. The individual arrived at the reception center at 0900 and was treated and monitored by the emergency personnel. Medical treatment was prompt and monitoring was performed properly. All pertinent information was recorded and held for later use in treatment of the injured individual. Personnel at the reception center contacted the Westchester County EOC at 0902 to inform them of the status of the injured and request the dispatch of an ambulance.

The Greenburgh Police Department ambulance was summoned to the reception center, arriving at 0913. The ambulance crew provided additional medical treatment (I.V., oxygen, etc.) and used good procedures to avoid spreading contamination. Prior to leaving the reception center, the ambulance crew called the Westchester Medical Center to inform them of their estimated time of arrival and to give the patient's vital signs and radiological contamination information. The units of contamination transmitted to the hospital were incorrect; counts per minute were reported instead of mR/hr.

The ambulance arrived at the Westchester County Medical Center at 0930, where the ambulance and its crew were immediately monitored for radiological contamination.

WCFA 14. The objective to demonstrate the adequacy of hospital facilities and procedures for handling contaminated individuals was partially met. Upon arrival of the ambulance at the medical center and following the monitoring procedures, the injured patient's medical needs were given prompt and appropriate attention. Monitoring was performed periodically throughout the treatment process and the readings for contamination and vital sign information were recorded by the nurse-recorder. Appropriate samples were taken and submitted to the lab for analysis. The emergency room was well set up and equipped to treat an injured contaminated patient. The medical staff generally used proper procedures to avoid the spread of contamination and demonstrated appropriate medical activities. Patient and staff exit procedures (i.e., monitoring, disrobing, bagging contaminated clothing, etc.) were done very effectively. One minor problem was observed, which involved the use of a sheet under the patient which caught the saline solution used for decontamination. Unless changed frequently

this could contribute to possible recontamination of the patient and also give misleading and erroneous radiological readings.

DEFICIENCIES

There were no Deficiencies observed in the Westchester County medical drill.

AREAS REQUIRING CORRECTIVE ACTION

1. **Description:** The sheet used under the patient during medical treatment caught and adsorbed the saline solution used for decontamination. Unless changed frequently this could contribute to possible recontamination of the patient and also give misleading and erroneous radiological readings (NUREG 0654, II, K.5.b).

   Recommendation: The emergency room staff should receive training in the proper use of bedding materials in order to limit the spread of contamination.

2. **Description:**. The units of contamination transmitted to the hospital were incorrect; counts per minutes were reported instead of mR/hr. (NUREG-0654, II, L.1)

   Recommendation: Ambulance personnel should receive additional training in recording and reporting radiological information.

AREA RECOMMENDED FOR IMPROVEMENT

There were no areas recommended for improvement.

2.5 ROCKLAND COUNTY, NEW YORK

2.5.1 Rockland County Emergency Operations Center (REOC)

Twelve objectives were to be demonstrated at the Rockland County EOC. One objective was not met (See Section 2.3.1, Deficiency 1 and JNC 3), and eleven objectives were fully met. The REOC is located in the Fire Training Center, Fireman's Memorial Drive, Pomona, New York.

While the objective to continuously monitor and control emergency worker exposure was not negotiated for evaluation during the exercise, evaluators assigned to the REOC made the following observations. To ensure that the REOC (located within the 10 mile EPZ) was protected in the event the plume approached (eight mile radius), each REOC staff member was issued a TLD. In addition, a high-range dosimeter and a low-range dosimeter were placed at several locations to measure any radiation in the area. The dosimeters were read hourly until the first release, and then every 15 minutes.

REOC 1. The objective to demonstrate the ability to mobilize staff and activate facilities promptly was met. The NUE ECL was received by the Rockland County Warning Point in the Fire Training Center communication room at 0722 via RECS. Immediately thereafter, the WP staff started calling the agencies and persons specified in the Emergency Response Team Notification List. All persons on the list were notified by 0732. This list was consistent with the plan procedures (RCS-4) and had up-to-date telephone numbers. The County Director, Office of Emergency Services (CDES) acknowledged the notification at 0732 and arrived at the REOC in a timely manner. The director immediately took control of the emergency activities at the WP and the REOC. The EOC Operations Manager arrived in a timely manner at 0753 at the REOC.

Notification of the Alert ECL was received over the RECS line at 0846. Additional persons listed in the plan were notified promptly over the status of the Alert ECL. The REOC was operational for decision-making, communications, and implementation of protective actions at 0855.

The WP notification procedures RCS-4 had been revised to incorporate earlier recommendations. This procedure now states that CDES, Operations Manager, Resource Coordinator, Dose Assessment Team Leader, Public Information Officer, Operations Liaison, and Palisades Interstate Parkway (PIP) police are to be notified by the WP staff after receiving notification of the Unusual Event ECL. This procedure was adequately followed during the exercise. All of these emergency staff were notified by 0732, within a few minutes of the initial NUE ECL received on the RECS line at the WP.

A previous ARCA (Rockland 1) from IPNPS Supplement to the PEA Version 2, dated September 16, 1987 has been corrected and was verified during this exercise.

REOC 2. The objective to demonstrate the ability to fully staff facilities and maintain staffing around the clock was met. Shift changes were successfully

demonstrated for the dose assessment team leader and Special Facilities Coordinator. In both cases, incoming personnel were briefed on the emergency status and the transitions were made without disrupting operations. All other agencies demonstrated 24-hour staffing capability by presentation of a roster.

REOC 3. The objective to demonstrate the ability to make decisions and to coordinate emergency activities was met. The County Executive was clearly in control of the emergency operations. REOC staff members assembled the information upon which decisions were made. The County Executive was greatly assisted by the CDES. The Operations Manager facilitated the dissemination of information and provided the overall coordination of REOC activities.

To update staff on the emergency situation, staff briefings were conducted periodically in the operations room. The information given was accurate and comprehensive. A copy of the plan was available for reference. Messages were transmitted in an accurate and timely manner. Also, messages were properly logged and were reproduced and distributed effectively for efficient emergency operations. Most of the internal messages were recorded on the standard County of Rockland Office of Emergency Services, Internal Message Form. However, messages from a few agencies, including the Sheriff and the ARC, were recorded on the State of New York Division of Military and Naval Affairs, Office of Disaster Preparedness, Internal Message Form. While, the latter form is satisfactory, it is slightly different than the standard county form. It is recommended that all agencies use the county form.

REOC 4. The objective to demonstrate the adequacy of facilities and displays to support emergency operations was met. Facilities at the REOC were adequate, with sufficient space, light, furniture and telephones to support the emergency operations activities. Noise was adequately controlled in all areas of the REOC. The facility was also capable of supporting extended 24-hour operations. Backup power was available for continued REOC operations in case of a power failure. Access to the REOC area was properly controlled. The REOC staff made an effective use of these facilities for efficient emergency operations.

EOC displays, including maps and status boards, were sufficient. Maps showing the plume EPZ, siren locations, evacuation routes, relocation centers, traffic control points, radiological monitoring points, and population by evacuation area were posted and used effectively.

Status boards were located throughout the REOC in the various functional areas and were updated in a timely manner throughout the exercise. These included the event status board, ERPA status board, reception center status board, ECL status board, congregate care center status board, and law enforcement board. The information on the status board was complete and accurate. Separate entries were made for every new or updated information. This appropriate use of the status board contributed towards efficient EOC operations.

A previous ARCA (Rockland 4 and 5) from IPNPS Supplement to the PEA Version 2, dated September 16, 1987 has been corrected and was verified during this exercise.

REOC 5. The objective to demonstrate the ability to communicate with all appropriate locations, organizations, and field personnel was met. As required by the plan procedures, the communication function was transferred to the REOC at 0905. Notifications of the Site Area Emergency ECL, and General Emergency ECL were received at 1032 and 1204 respectively, over the RECS telephone line in the REOC communication room. The RECS line was used effectively throughout the exercise. Beside the RECS line, other REOC communications channels included RACES, radios, telefax and commercial telephone lines. All of these communication systems were operational and generally functioned well throughout the exercise.

REOC 6. The objective to demonstrate ability to project radiation dosage to the public via plume exposure, based on plant and field data, and to determine appropriate protective measures, based on PAGs, available shelter, evacuation time estimates, and all other appropriate factors was met. The dose assessment staff correctly performed all of their assigned functions. Overall, a high state of readiness was demonstrated by the staff in protecting the public health and safety of the public.

The dose assessment group had all the needed data to make calculations of where the plume was projected to go and had some idea of its isotopic content, particularly its iodine to noble gas ratio. Prior to the release of radioactive material, the dose assessment staff made several extrapolations in order to develop dose projections. After the release started, plant status data, e.g., noble gas release rate, was used to project off-site dose rates. Based on these projections, recommendations were made to the Deputy County Executive. However, this input was not used by the command and control in their decision-making process for recommending evacuation and sheltering. Instead, it appeared that the command and control used only plant condition information as their criteria. It is recommended that the command and control make decisions based on all inputs from the various sources.

MIDAS was used as primary system for receiving technical plant data from the utility. For most of the time, MIDAS gave 15-minute updates on plant and meteorological conditions. Also available as backup was a telefax machine. These systems in combination were used effectively in obtaining the plant status data on a timely basis.

There were minor problems for a short period of time with MIDAS, which was the primary system for receiving technical plant data from the utility. These system-related problems were quickly resolved and the system was restored to transmit information every 15 minutes. During the MIDAS breakdown, the back-up telefax machine was effectively used. As such, no adverse effect was observed on the efficient operations of the REOC. However, it is recommended that MIDAS be tested further for its reliability.

A previous ARCA (Rockland 3) from IPNPS Supplement to the PEA Version 2, dated September 16, 1987 has been corrected and was verified during this exercise.

REOC 7. The objective to demonstrate the ability to alert the public within the 10-mile EPZ, and disseminate an initial instructional message, within 15 minutes was not met due to a New York State Deficiency (See Section 2.3.1, Deficiency 1 and JNC 1). Message content, siren sounding (simulated), and EBS air times were synchronized with each jurisdiction. Siren activation (simulated) and specific air time for all EBS messages subsequent to EBS message 1 were all within the prescribed 15-minute interval from the decision time.

The Rockland County Deputy County Executive actively participated in the four-county decision reached at 0924 to sound the sirens and transmit appropriate follow-up EBS message. The siren was simulated at 0936. This EBS message was to inform the public that in Rockland County, all schools and parks had been closed and children were being returned home according to their school's early dismissal policy.

In addition, three other EBS messages pertaining to Rockland County were aired within 15 minutes of the decision made during the exercise. Also, as per the plan, Rockland County staff coordinated its input with Orange, Putnam, and Westchester counties via dedicated telephone lines.

REOC 8. The objective to demonstrate the ability to provide advance coordination of information released was met. The Deputy County Executive coordinated the simulated siren activation and the follow-up information to be released on EBS with the three counties and the state. The Rockland County PIO located at the REOC provided information for public instructional messages to the Rockland County PIO at the JNC. Advance coordination of all EBS instructional messages took place at the JNC.

REOC 9. The objective to demonstrate the organizational ability and resources necessary to manage an orderly evacuation of all or part of the plume EPZ was met. The decision making and coordination to demonstrate the evacuation of the schools and the general population was excellent. Evacuation time estimates, road conditions, and available transportation resources were properly discussed and evaluated prior to the decisions to evacuate. Eight reception centers (one actual) and two congregate care centers (one actual) were activated. While activating these centers, among others, the Department of Social Services effectively coordinated with such key agencies as schools, Department of Highways, ARC, RACES, Department of Health, ambulance, PIO, and police.

According to the REOC staff, the transportation companies can now be called upon on a 24-hour basis on any day. In addition to these transportation companies, the county owns several vans and buses equipped to handle mobility-impaired persons. These combined vehicle resources are adequate to handle about 70 non-institutionalized,

mobility-impaired persons in Rockland County. The plan procedure DPT-2 has also been revised to provide a detailed breakdown of committed vehicles equipped with the wheelchairs. Also provided is the total seating capacity by vehicle type by transportation company.

The formal school evacuation time estimates have been submitted to FEMA for review. A letter of agreement with the Rockland County has been received by Peter Brega, Inc. for providing emergency bus services in the event of a radiological emergency.

The correction of previous ARCAs (Rockland 11, 38 and 47) from IPNPS Supplement to the PEA Version 2, dated September 16, 1987 has been verified during this exercise.

Previous ARCAs (Rockland 66 and 67) from IPNPS Supplement to the PEA Version 2, dated September 16, 1987 have been corrected as a result of the submittal of the January 29, 1988 annual letter of certification and subsequent review by FEMA Region II.

REOC 10. The objective to demonstrate the organizational ability to deal with impediments to evacuation, such as inclement weather or traffic obstruction was met. A free play message indicating an impediment to evacuation was introduced in the REOC. The impediment involved washout of southbound Palisades Interstate Parkway at its intersection with Route 59. The police quickly analyzed the problem. The solution resulted in rerouting the traffic to I-87 and then to Garden State Parkway. The police also decided not to issue a news release to avoid public confusion. They also simulated the dispatch of resources to fix the collapsed roadway.

REOC 11. The objective to demonstrate the organizational ability necessary to control access to an evacuated area was met. In response to a declaration of the Alert ECL at 0846, Rockland Deputy County Executive ordered all schools and parks to be closed. By 0935, all parks in Rockland County were closed and secure. Necessary traffic control points were established by Palisades Interstate Parkway Police in a timely manner. A free play message was also introduced at the REOC to set up a TCP at Wayne Avenue and Route 9W (TCP: R-54). After analyzing the situation with the REOC staff, the sheriff promptly ordered the field personnel to set up the TCP. The TCP was activated in a timely manner. Also, during the exercise, orders were given to Sheriff Marine Unit to close Hudson River Jurisdictional Waters to all traffic including commercial and recreational units. The sheriff also notified HELP and the U.S. Coast Guard of their actions.

REOC 12. The objective to demonstrate the ability to supply and administer KI, once the decision has been made to do so was met. Even though the State determined that radioactive releases from IP-3 were not substantial enough to require administration of KI, emergency workers were provided KI with their dosimetry before dispatch to the field.

An adequate supply of fresh (within its expiration date) KI was available at the REOC. The county dose assessment staff were aware of the predetermined projected dose (25 Rem) which would trigger a decision to administer KI. The emergency staff was aware of the person who will direct them to take KI. Plant status, release rate data, and field monitoring results were considered and indicated that sufficient radioiodine was not released to warrant the use of KI by emergency workers. Specifically, the calculations showed iodine concentration to be 3.3 R at the site boundary and 0.3 R at 2 miles from the plant. Based on these calculations, and compared to the field teams air sample data, a decision was reached not to request permission from the State Health Commissioner to administer KI to Rockland County emergency workers.

DEFICIENCIES

There were no Deficiencies observed in the operation of the REOC during the exercise.

AREAS REQUIRING CORRECTIVE ACTION

There were no Areas Requiring Corrective Action observed in the operation of the REOC during the exercise.

AREAS RECOMMENDED FOR IMPROVEMENT

1. **Description:** Most of the internal messages were recorded on the standard County of Rockland Office of Emergency Services, Internal Message Form. However, messages from a few agencies, including the Sheriff and the ARC, were recorded on the State of New York Division of Military and Naval Affairs, Office of Disaster Preparedness, Internal Message Form. While, the latter form is satisfactory, it is slightly different than the standard county form.

   Recommendation: To avoid any confusion, all agencies should use the standard County of Rockland Office of Emergency Services, Internal Message Form.

2. **Description:** The Deputy County Executive made recommendations based on the radiation dosage projections. However, this input was not used by the command and control in their decision-making process for recommending evacuation and sheltering. Instead, it appeared that the command and control used only plant condition information as their criteria.

   Recommendation: The command and control should make decisions based on all inputs including radiation dosage projections from the various sources.

3. **Description:** Minor problems were observed for a short period of time with MIDAS, which was used as primary system for receiving technical plant data from the utility. The system related problems were quickly resolved and the system was restored to transmit information every 15 minutes. During the MIDAS breakdown, the back-up telefax machine was effectively used. While no adverse effect was observed on the efficient operations of the EOC, it was obvious that system should be made more reliable.

   Recommendation: MIDAS should be tested further for more reliable data transmission from the utility to the REOC. Necessary follow up actions should be taken to improve the system reliability.

2.5.2 Field Monitoring Teams

The four objectives to be demonstrated by the Rockland County field monitoring teams were fully met.

RCFA 2. The objective to demonstrate the ability to mobilize and deploy field monitoring teams in a timely manner was met. The Field Team Coordinator was contacted by the Rockland County EOC at 0932 and team members began to arrive at the dispatch point at 0945. There is a regular system with lists of all personnel and phone numbers for activation of staff on a 24-hour basis. Team members were an given initial briefing which addressed the plant conditions and status. Field kits were inventoried and equipment checked for operability. The actual equipment present in the kits reflected the equipment list and instruments had been recently calibrated. Team members were packed and deployed into the field at 1020; they arrived at their first sampling location at 1051. Boots and anticontamination suits were not available for the team members nor were they identified on the equipment list. This equipment should be included in the equipment inventory for rapid deployment.

RCFA 3. The objective to demonstrate appropriate equipment and procedures for determining ambient radiation levels was met. In general, the team members were adequately trained in using the gamma survey meters and air samplers at fixed locations. The team had no difficulty in locating the monitoring points and took open and closed window readings at six inches and four feet at locations as directed by their procedures. The use of plastic bags to enclose and protect the survey instrument probes was simulated; the team was aware of the need to use the bags. Team members did not demonstrate proper procedures in taking gamma measurements while traversing the plume. Some additional training in procedures and basic health physics would be beneficial.

RCFA 4. The objective to demonstrate appropriate equipment and procedures for measurement of airborne radioiodine concentrations as low as 10^{-7} μCi/CC in the

presence of noble gas was met. One complete air sample was collected by the team as they demonstrated their field procedures; the taking of another sample was simulated.

RCFA 10. The objective to demonstrate the ability to communicate with all appropriate locations, organizations, and field personnel was met. The radio provided in the vehicle for the team worked well and contact with the dispatcher was maintained throughout the exercise. No backup system was demonstrated, although the team members indicated they would use a public telephone if needed. Communication protocol was good and messages were identified as drill or exercise messages.

DEFICIENCIES

There were no Deficiencies observed for the field monitoring teams.

AREAS REQUIRING CORRECTIVE ACTION

There were no Areas Requiring Corrective Action observed for the field monitoring teams.

AREAS RECOMMENDED FOR IMPROVEMENT

1. **Description:** Boots and anticontamination suits were not available for the team members nor were they identified on the equipment list.

   Recommendation: This equipment should be included in the equipment inventory for rapid deployment.

2. **Description:** Team members did not demonstrate proper procedures in taking gamma measurements while traversing the plume.

   Recommendation: Additional training in procedures and basic health physics should be conducted.

2.5.3 Field Activities

There were six objectives to be demonstrated through Rockland County field activities. Four objectives were fully met, and two objectives were partially met.

RCFA 1. The objective to demonstrate the ability to mobilize staff and activate facilities promptly was met. A general population bus route and a school bus route were

requested during the exercise for actual demonstration through a free-play message which was introduced in the REOC. At 1145, a message was received by the dispatcher at the Educational Bus Act II Transportation Inc. in Spring Valley, New York, from the REOC requesting that a bus be sent to run a school evacuation route. The bus driver was dispatched promptly. The reception center facility at the Salvation Army Training Center in Suffern, New York was activated in a timely manner.

RCFA 5. The objective to demonstrate the organizational ability and resources necessary to manage an orderly evacuation of all or part of the plume EPZ was met. A bus from the Educational Bus Act II Transportation Inc. in Spring Valley, New York, ran a general population evacuation route. The bus was dispatched from the garage and ran evacuation route #8, stopping at the Nanuet Senior High School Reception Center (closed during the exercise), and terminating the run back at the garage. The bus driver was familiar with the evacuation route, knew his responsibilities, and was given a detailed map depicting the evacuation route.

Previous ARCAs (Rockland 36, 37 and 46) from IPNPS Supplement to the PEA Version 2, dated September 16, 1987 have been corrected and were verified during this exercise. Previous ARCA (Rockland 55) from IPNPS Supplement to the PEA Version 2, dated September 16, 1987 has been corrected as a result of the submittal of the January 29, 1988 annual letter of certification and subsequent review by FEMA Region II.

RCFA 6. The objective to demonstrate the organizational ability and resources necessary to control access to an evacuated area was met. One TCP was activated at the intersection of Wayne Avenue and 9W (R-54). The police officer responding arrived at the traffic control point at 1040 and was knowledgeable and professional about his assignment and responsibilities.

RCFA 9. The objective to demonstrate the adequacy of procedures for registration and radiological monitoring of evacuees was partially met. Screening of evacuees was successfully demonstrated at the rear entrance to the reception center (Salvation Army Training Center). Buses and private automobiles would discharge passengers here and the drivers would proceed to the parking areas, where the vehicles were monitored for contamination. Radiological monitors demonstrated procedures and equipment used to check vehicles for gross and minor contamination: radiologically clean vehicles would be directed to the clean parking area, minor contamination would be removed at this check point, and cars with significant contamination would be impounded in a special area to await more intensive decontamination. Radiological monitors at the building entrance were equipped with protective clothing and dosimeters and demonstrated the first screening of evacuees with geiger counters. They were not aware of the possible concentration of iodine isotopes in the thyroid and did not perform this monitoring properly. Revisions should be made to their procedures to include this step in the monitoring of evacuees.

The radiological monitors present at the reception center were able to monitor approximately 250 evacuees per hour. This would be sufficient to monitor 20% of the Rockland County population within the 10-mile EPZ within 12 hours of arrival, which could be expected to arrive at this reception center.

The set up of the facility was effective for receiving, monitoring and processing evacuees. Supplies on hand were sufficient for approximately 100 persons but could have been resupplied from local sources. Individuals entering the facility were registered, monitored, and decontaminated, if necessary. Separate shower and locker facilities were provided for men and women who required decontamination. Men and women were available to perform monitoring following the showering of the evacuees. Clean disposable paper coveralls were provided for those whose clothing was contaminated. Waste receptacles were available for isolating and disposing of contaminated clothing. Final monitoring checks were made at the exits of the rooms where decontamination was performed and persons who were clean received a green card, allowing them to proceed freely through the unrestricted areas of the reception center. Green cards were also issued to those evacuees who were not contaminated upon arrival at the facility.

Previous ARCAs (Rockland 31, 32, 33 and 35) from IPNPS Supplement to the PEA Version 2, dated September 16, 1987 have been corrected and were verified during this exercise.

RCFA 10. The objective to demonstrate the ability to communicate with all appropriate locations, organizations, and field personnel was partially met. The bus used for general population evacuation was equipped with a radio for communications with the bus dispatcher. Proper radio protocol was used and no dead spots were encountered.

The only communication system available at the reception center consisted of one pay telephone in a remote corridor. This arrangement is inadequate given the nature of the reception operations. Several telephone lines should be available for use by the emergency workers. A radio backup which could communicate with the REOC, hospital/ambulance net, and bus dispatcher would also improve capabilities. Additionally, the evacuees should have access to pay telephones for their personal use.

The school bus driver maintained radio contact with the dispatcher at the bus garage and relayed the arrival time at the school and reception center. The quality of the radio reception diminished as the bus approached the drop-off point (the reception center); as the bus got closer to the garage on the return trip, radio reception improved.

Communications were maintained between the police officer at the TCP and his dispatcher via the police radio.

A previous ARCA (Rockland 43) from IPNPS Supplement to the PEA Version 2, dated September 16, 1987 has been corrected and was verified during this exercise.

RCFA 11. The objective to demonstrate the organizational ability and resources necessary to effect an orderly evacuation of schools within the plume EPZ was met. The

bus driver was issued a dosimetry kit and a map of the designated route and was dispatched at 1153. The route designated for demonstration included pickup of children (simulated) from the Thiells Elementary School in Thiells, New York. The driver displayed a good knowledge of the roads and the route assigned. The bus arrived at the school at 1220, simulated picking up students, and drove to the Orange Community College, which is the reception center specified on this evacuation route, arriving there at 1315.

A previous ARCA (Rockland 45) from IPNPS Supplement to the PEA Version 2, dated September 16, 1987 has been corrected and was verified during this exercise.

DEFICIENCIES

There were no Deficiencies observed for Rockland County field activities during this exercise.

AREAS REQUIRING CORRECTIVE ACTION

1. **Description:** Personnel performing radiological monitoring of evacuees at the reception center were not aware of the possible concentration of iodine isotopes in the thyroid and did not perform this monitoring properly (NUREG-0654, II, J.12).

   Recommendation: Training should be provided and revisions made to their procedures to include this step in the monitoring of evacuees.

2. **Description:** The only communication system available at the reception center consisted of one pay telephone. This arrangement is inadequate given the nature of the reception operations (NUREG-0654, II, F).

   Recommendation: Several telephone lines should be available for use by the emergency workers. A radio backup which could communicate with the county EOC, hospital/ambulance net, and bus dispatcher, would also improve capabilities.

AREAS RECOMMENDED FOR IMPROVEMENT

There were no Areas Recommended for Improvement observed for Rockland County field activities during this exercise.

2.5.4 Emergency Worker Radiological Exposure Control

Two objectives were demonstrated for Rockland County emergency worker radiological exposure control during this exercise. One objective was fully met, and one objective was partially met.

RCFA 7. The objective to demonstrate the ability to continuously monitor and control emergency worker exposure was partially met. Team members had adequate dosimetry; pocket dosimeters were read regularly and reported to the dispatcher. Dosimeters were zeroed when issued and readings were recorded on written forms. All team members had TLDs supplied to them with the pocket dosimeters.

Bus drivers on the general population evacuation routes were equipped with dosimeters (0-5 R and 0-200 R), a TLD, and record-keeping cards. Over 50 dosimeter kits were available at the bus dispatcher's office. There was a liaison assigned to the bus dispatcher who distributed dosimetry as well as maps to the bus drivers. All of the dosimeters were properly set at zero. The bus driver used during this exercise was familiar with the procedures for properly using the dosimeters. Readings were made every 30 minutes (or sooner if any radiation were encountered while driving the route) and logged on the record card. The driver was aware that if his reading was 1 R he should notify the dispatcher and await instructions and that if his reading was 3 R or larger he should leave the area immediately. Bus drivers should be advised by dispatcher of areas which maybe affected by a release and also made aware of the importance of keeping bus windows closed if radiation were encountered during a run.

The police officer responding to the TCP demonstrated at this exercise was equipped with both high and low range dosimeters. This dosimetry was ready for use and properly worked. The officer had been trained in emergency worker exposure control and demonstrated good knowledge of dosimetry use, exposure limits and how authorization would be received to exceed these limits if necessary.

Previous ARCAs (Rockland 56, 57, 58, 61, 62 and 63) from IPNPS Supplement to the PEA Version 2, dated September 16, 1987 have been corrected and were verified during this exercise.

RCFA 8. The objective to demonstrate the ability to supply and administer KI, if the decision has been made to do so was met. Emergency workers were aware of the procedures regarding the distribution of KI and the individual responsible for authorizing the administration of KI. Even though the State determined that radioactive releases from IP-3 were not substantial enough to require administration of KI, emergency workers were provided KI with their dosimetry before dispatch to the field.

Field monitoring team members had KI in their kits, were familiar with the procedures for its use, and knew that authorization was required before ingestion.

KI was issued to the bus drivers conducting general population evacuation and school evacuation. They were aware that authorization for its use would come from the county EOC via his dispatcher.

The officer responding to the traffic control point was aware that the procedure for his use of the KI issued to him required authorization from his supervisor.

A previous ARCA (Rockland 60) from IPNPS Supplement to the PEA Version 2, dated September 16, 1987 has been corrected and was verified during this exercise.

DEFICIENCIES

There were no Deficiencies observed for Rockland County emergency worker radiological exposure control during this exercise.

AREAS REQUIRING CORRECTIVE ACTION

1. **Description:** Bus drivers of general population routes were not aware of several items which could affect exposure themselves or the passengers:

   - Information on the areas along the evacuation routes which may be affected by a release were not transmitted to the driver by the dispatcher.
   - Reading of dosimetry every 15 minutes
   - Importance of keeping bus windows closed if radiation were encountered during a run (NUREG-0654, II, K.3.b).

   Recommendation: Bus drivers and dispatcher should receive training in ways of reducing potential exposure from a release.

AREAS RECOMMENDED FOR IMPROVEMENT

There were no Areas Recommended for Improvement observed for Rockland County emergency worker radiological exposure control during this exercise.

2.5.5 School Interviews

RCFA 12. The objective to demonstrate the organizational ability and resources necessary to effect an orderly evacuation of schools within the plume EPZ was partially met. Five schools in Rockland County were visited and interviews conducted to evaluate the degree of preparedness for each school. Listed are the names of the schools, towns, and the school district:

1. Congers Elementary School, Congers, NY — Clarkstown Central School District

2.	Colton Elementary School, Spring Valley, NY	East Ramapo Central School District
3.	Neary Elementary School, Haverstraw, NY	North Rockland Central School District
4.	Liberty Elementary School, Valley Cottage, NY	Nyack Public School District
5.	Robin Hill School (private), Suffern, NY	Ramapo School District

At each school either the principal or the superintendent was interviewed. A preselected series of questions was asked at each school by the federal evaluator.

The parents of school children are notified of the county's protective action decisions regarding the closing of schools through EBS. The authorities interviewed at each of the schools in Rockland County, with the exception of the Congers Elementary School, had a good knowledge of the established school emergency procedures. Early dismissal of each of the schools is implemented upon recommendation from the District Superintendent. A written call-down list is used to make telephone calls to parents. The notification list is developed and periodically updated, with current home and emergency telephone numbers of parents, by written request of the schools.

All schools have written procedures and parents were kept informed through school publications which contain the addresses of the designated relocation centers.

Officials at all of the schools except Congers Elementary School were familiar with the chain of command that would be involved during an evacuation. Estimates of evacuation times and procedures were known.

The principal of the Congers Elementary School was not aware of any emergency planning provisions at the school. Such things as locations of relocation centers, evacuation procedures, evacuation time estimates, and a general knowledge of emergency preparedness were not available. It is recommended that, if emergency procedures are not available, they be prepared and that the officials of the Congers Elementary School receive appropriate training.

DEFICIENCIES

There were no Deficiencies observed during the Rockland County school interviews.

AREAS REQUIRING CORRECTIVE ACTION

1. **Description:** The principal of the Congers Elementary School was not aware of any emergency planning provisions at the school. The

locations of relocation centers, evacuation procedures, evacuation time estimates and a general knowledge of emergency preparedness were not known or available (NUREG-0654, II, J.9, J.10.g).

Recommendation: If emergency procedures are not available, they should be prepared and the officials of the Congers Elementary School should receive appropriate training in emergency preparedness.

AREAS RECOMMENDED FOR IMPROVEMENT

There were no Areas Recommended for Improvement observed during the Rockland County school interviews.

2.6 ORANGE COUNTY, NEW YORK

2.6.1 Orange County Emergency Operations Center (OEOC)

Twelve objectives were to be demonstrated at the Orange County EOC. One objective was not met (See Section 2.3.1, Deficiency 1 and JNC 3), ten objectives were fully met, and one objective was partially met.

OEOC 1. The objective to demonstrate the ability to mobilize staff and activate facilities promptly was met. Activation of the Orange County emergency response organization was initiated upon receipt of notification of the Alert ECL via the RECS telephone at the WP at approximately 0845. The communications officer at the WP completed Part I of the New York State Radiological Emergency Data Form and then notified the County Assistant Director of the Emergency Management Office (CADEMO), who began mobilization of his staff. The CADEMO had Community Alert Network in Schenectady, New York, a contractor, notify key staff members using its automatic telephone dialing system. Based on teletype verification received at the OEOC, the contractor verified that primary notification of key staff had been completed by 0857. The OEOC was operational at 0930.

Personnel from the U.S. Military Academy have attended training provided by Orange County and were very knowledgeable about how notification is received by tone alert radio and how to receive and record information on the New York State Radiological Emergency Data Form. The U.S. Military Academy has a RECS drop line.

A previous ARCA (Orange 48) from IPNPS Supplement to the PEA Version 2, dated September 16, 1987 has been corrected and was verified during this exercise.

OEOC 2. The objective to demonstrate the ability to fully staff facilities and maintain staffing around the clock was met. A roster designating first and second shift personnel for each of the primary Orange County response agencies was presented. An actual shift change was demonstrated for the decision-making function when the County Executive delegated his responsibilities to the Assistant County Executive. The Assistant County Executive was properly briefed by the County Executive and the CADEMO prior to assuming his responsibilities.

OEOC 3. The objective to demonstrate the ability to make decisions and to coordinate emergency activities was met. The CADEMO was responsible for management of the OEOC and was actively involved in the direction and control of Orange County activities. The County Executive or his designee, the Assistant County Executive, actively participated in discussions, and was the county decision-maker. When protective action recommendations for evacuation were received from the EOF, the ability to make emergency action decisions was evaluated. Coordination of technical assessment, decision-making, and the consideration of population evacuation time

estimates, meteorological conditions, and other factors were outstanding. The CADEMO demonstrated exceptionally good understanding of the factors to be integrated into the decision-making process. He involved the County Commissioner of Health and the accident assessment, highways, and school representatives in considering protective actions that were discussed in detail by key individuals with the County Executive. The decision was made not to follow the utility's evacuation recommendation, but rather only to keep school children in schools. This and other decisions were based appropriately on technical assessment of the situation and on careful consideration of all factors necessary to protect the health and safety of the public.

Rockland and Orange counties share ERPAs 39 and 40. In a previous exercise, confusion caused by lack of coordination between the County Executives in making protective action recommendations for these ERPAs resulted in an ARCA. The counties have revised their plans to address this problem. The Rockland County Executive decides which response options are to be implemented in ERPAs 39 and 40; the CADEMO implements the response options for all Orange County ERPAs (including 39 and 40) by coordinating activities for all supporting county agencies.

A previous ARCA (Orange 4) from IPNPS Supplement to the PEA Version 2, dated September 16, 1987 has been corrected and was verified during this exercise.

OEOC 4. The objective to demonstrate the adequacy of facilities and displays to support emergency operations was met. The OEOC is located in the County Government Center in Goshen. It includes four main rooms: the Operations Room, where county agency and support organization representatives had their work places; the Accident Assessment Room; the Command Room, which included the public information function; and the Communications Room, with the communications staff that manned radio systems. The facilities are quite adequate and have cots, showers, blankets, backup power, and other supplies to accommodate extended operations. The operations room has the appropriate status boards, maps, and charts. The accident assessment room has additional maps, boards, and charts relevant to accident assessment. Also, there are strategically placed TV monitors with ECLs and response actions. All these displays were kept current. Access to the OEOC was controlled by a uniformed officer. Sign-in sheets recorded arrival and departure times of emergency staff.

A previous ARCA (Orange 1) from IPNPS Supplement to the PEA Version 2, dated September 16, 1987 has been corrected and was verified during this exercise.

OEOC 5. The objective to demonstrate the ability to communicate with all appropriate locations, organizations, and field personnel was met. A number of the communications systems available at the EOC were used effectively and without problems. RECS, an unswitched (dedicated) telephone circuit, was used throughout the exercise to receive plant status and protective action recommendations from the control room at IPNS or from the EOF. There are RECS stations at the WP, where the NUE ECL was received, and in the Accident Assessment Room; the RECS line is also monitored in the Command Room. The Executive Hotline Emergency Communications System,

another dedicated telephone circuit that links the Command Rooms of the SEOC and four county EOCs, was used to confer with the other plume EPZ counties and the State to coordinate protective actions. Radio systems were used to communicate with field workers from the Sheriff's Department and the Department of Public Works. The Field Team Coordinator maintained radio contact with the field monitoring team and proper radio protocol was observed. County Orange Volunteer Emergency Radio Service (COVERS) monitored emergency radio communications and provided backup capabilities.

The OEOC is equipped with two new telecopiers. One, located in the Command Room, is linked with the JNC and was used to receive hard copies of all EBS messages and those news releases that originated in the OEOC. The other telecopier, located in the Accident Assessment Room, was used to receive hard copies of the complete NYS Radiological Emergency Data Forms from the EOF. These telecopiers provided prompt transmission of messages. This corrects an ARCA resulting from delays in transmission of messages from the JNC when an older telecopier was used in a prior exercise. The work places of county agency and support organization representatives in the Operations Room are equipped with commercial telephones. In operation was a light on each telephone in the Operations Room that flashes when the telephone rings.

A previous ARCA (Orange 2) from IPNPS Supplement to the PEA Version 2, dated September 16, 1987 has been corrected and was verified during this exercise.

OEOC 6. The objective to demonstrate the ability to project radiation dosage to the public via plume exposure, based on plant and field data, and to determine appropriate protective measures, based on PAGs, available shelter, evacuation time estimates, and all other appropriate factors was met. The dose assessor gave an excellent demonstration of the ability to calculate dose projections. The Nuclear Facility Operators provided meteorological data via MIDAS. The dose projection calculations were made for in-plant monitor data and for plant release data and were compared to field monitoring team data from Westchester, Rockland, and Orange counties. Radiological monitoring data was used in dose projection calculations. Dose projection calculations were cross checked with the EOF, SEOC, and Westchester County. These calculations could be made by use of the MIDAS computer or with use of hand-held calculators. Because the MIDAS computer could not be used simultaneously as an emergency status display monitor and as a computer, and because the accident assessment team chose to use it as a rapid means of providing emergency information updates to the EOC staff, the hand-held calculator was used for dose projections. The field monitoring teams were able to provide information that confirmed the limited plume contact with Orange County. The county's decisions about protective actions were based soundly upon available information about plant status, current and projected meteorological conditions, evacuation times, and available shelter.

A previous ARCA (Orange 3) from IPNPS Supplement to the PEA Version 2, dated September 16, 1987 has been corrected and was verified during this exercise.

OEOC 7. The objective to demonstrate the ability to alert the public within the 10-mile EPZ, and disseminate an initial instructional message, within 15 minutes was not met due to a New York State Deficiency (See Section 2.3.1, Deficiency 1 and JNC 1). Message content, siren sounding (simulated), and EBS air times were synchronized with each jurisdiction. Siren activation (simulated) and specific air time for all EBS messages subsequent to EBS message 1 were all within the prescribed 15-minute interval from the decision time.

The County Executives of the four counties within the 10-mile EPZ conferred via the Executive Hotline telephone and jointly decided at 0924 to sound the sirens at 0936 and to broadcast an initial EBS message. In Orange County, sounding of the sirens was simulated at the specified time.

A free play message that a siren had failed to sound, causing simulated deployment of route alerting, was interjected at 1211. The Sheriff's representative at the OEOC responded promptly. He consulted a document on his table that contains schematic diagrams of the routes to be run for each siren that fails. At 1219, he called the Sheriff's Office to instruct that a vehicle be dispatched and he gave the route to be run. Sheriff's deputies and other police and fire personnel who may do route alerting carry wallet-sized cards with the message to be given.

OEOC 8. The objective to demonstrate the ability to provide advance coordination of information released was partially met. The PIO at the OEOC worked with the County Executive, or his designee, to develop Orange County's input into EBS messages and Orange County news releases. This information was then relayed by a PIO at the OEOC to Orange County's PIO at the JNC. Hard copies of completed EBS messages and the six Orange County news releases were transmitted promptly via telecopier to the OEOC. These six news releases contained appropriate information and were timely.

Information regarding the closing of parks and later the evacuation of ERPAs 39 and 40, which are shared by Orange and Rockland counties, was properly coordinated during the decision-making conferences via the Executive Hotline telephone. There was proper coordination, so that the first Orange County news release was consistent with the first EBS message regarding closing of parks in ERPAs 39 and 40. The EBS messages that advised the evacuation of ERPAs 39 and 40 were confusing, however. They state that the Rockland Deputy County Executive advises residents in ERPAs 39 and 40 in Rockland County to evacuate. EBS messages 3 and 4 go on to state that no action was required by residents of Orange County. Subsequent EBS messages do not mention Orange County. These EBS messages imply that the few Orange County residents in ERPAs 39 and 40 are not advised to evacuate. This implication is not in accord with the intent of the recent changes in the counties' procedures that authorize the Rockland County Executive to make protective action decisions for all of ERPAs 39 and 40. The decision form used at the JNC does not show ERPA 39 as being partly in Orange County. Emergency information brochures distributed to Orange County residents refer to decisions of "county emergency officials." To be consistent with these brochures, it is advisable that EBS messages note that the Orange County Executive concurs with or endorses the Rockland County Executive's recommendations.

OEOC 9. The objective to demonstrate the organizational ability and resources necessary to manage an orderly evacuation of all or part of the plume EPZ was met. The CADEMO, with key staff support as needed, demonstrated excellent skills in analyzing situations presented by the exercise and in suggesting appropriate protective actions to the County Executive. The CADEMO also demonstrated ability in instructing agency representatives on the action required of their respective agencies.

In an earlier exercise, an ARCA resulted from a bus driver not being aware of the nature of the handicap conditions of the non-institutionalized mobility impaired. A listing of the handicap for non-institutionalized mobility-impaired individuals to be evacuated was used in discussions by the CADEMO during the simulation of a mobility-impaired evacuation. This information would be available to drivers responsible for evacuation of the transit-dependent.

A previous ARCA (Orange 28) from IPNPS Supplement to the PEA Version 2, dated September 16, 1987 has been corrected and was verified during this exercise.

OEOC 10. The objective to demonstrate the organizational ability to deal with impediments to evacuation, such as inclement weather or traffic obstruction was met. At 1503, a free play message was interjected that northbound U.S. Route 9W was blocked by a fallen tree at the intersection with Seven Lakes Drive. It called for a discussion in the OEOC. The CADEMO notified the Commissioner of Public Works of the problem, who initiated discussions with affected agencies and simulated dispatch of appropriate vehicles. According to the Commissioner, Orange County has sufficient resources (personnel and vehicles) to deal with snow, wrecked vehicles, and other road impediments.

OEOC 11. The objective to demonstrate the organizational ability necessary to control access to an evacuated area was met. At 1000, a free play message was interjected to set up a traffic control point at the intersection of U.S. Routes 6 and 9W. The Commissioner of Public Works and the Sheriff's representative responded promptly to have barricades and a Sheriff's deputy, respectively, dispatched to that location. At 1221, the Sheriff's representative responded to a request from Westchester County to close the Bear Mountain Bridge.

OCEOC 12. The objective to demonstrate the ability to supply and administer KI, once the decision has been made to do so, was met. Even though the State determined that radioactive releases from IP-3 were not substantial enough to require administration of KI, emergency workers were provided KI with their dosimetry before dispatch to the field.

There were adequate supplies of KI at the OEOC. Administering KI was considered during discussions of protective actions; however, the decision not to do so was easily made because the scenario did not call for an iodine release that would require administration of KI.

The Thayer Hotel now has the standard emergency information poster posted near the registration desk.

A previous ARCA (Orange 49) from IPNPS Supplement to the PEA Version 2, dated September 16, 1987 has been corrected and was verified during this exercise.

DEFICIENCIES

There were no Deficiencies observed at the Orange County EOC.

AREAS REQUIRING CORRECTIVE ACTION

1. **Description:** Orange County and Rockland County share ERPAs 39 and 40. The counties reached an accord that the Rockland County Executive, or designee, will make protective action decisions for the entire area in these ERPAs. In view of this accord, EBS messages advising evacuation of ERPAs 39 and 40 created the opportunity for confusion as to whether Orange County residents in these ERPAs should evacuate. The EBS messages stated that Rockland County residents in these ERPAs are advised to evacuate by the Deputy Rockland County Executive and were either silent as to Orange County or stated that Orange County residents were not required to take any action (NUREG-0654, II, E.7).

   Recommendation: The Orange County PIOs should be trained to ensure that EBS messages concerning ERPAs 39 and 40 that advise Rockland County residents should also advise Orange County residents. In addition, because Orange County residents relate to advice of Orange County emergency officials, these messages should also state that Orange County emergency officials concur with the advice of the Rockland County officials.

AREAS RECOMMENDED FOR IMPROVEMENT

There were no areas recommended for improvement observed at the Orange County EOC.

2.6.2 Field Monitoring Teams

The four objectives to be demonstrated by the Orange County field monitoring teams were fully met.

OCFA 2. The objective to demonstrate the ability to mobilize and deploy field monitoring teams in a timely manner was met. The two members of the field monitoring

team were alerted at home by receipt of a telephone call at approximately 0830. They arrived at the EOC at 0916 and 0919. They were the primary team on the roster, which is kept at the EOC and at the County Warning Point. They checked the equipment lists for each case of equipment and operationally checked radiological instruments. They were dispatched at 1015 and arrived at their assigned location in the field at approximately 1056.

OCFA 3. The objective to demonstrate appropriate equipment and procedures for determining ambient radiation levels was met. The monitoring team had the required instruments that were properly calibrated, operations manuals, check sources and spare batteries. They demonstrated correct use of their instruments and monitoring skills. They were well-trained, having received 1-2 hour refresher courses monthly from power plant instructors and state and local government personnel. They used a suitable pickup truck. Both monitors were veteran volunteers who have maintained a high degree of interest and enthusiasm for radiological field monitoring.

OCFA 4. The objective to demonstrate appropriate equipment and procedures for measurement of airborne radioiodine concentrations as low as 10^{-7} μCi/CC in the presence of noble was met. The field monitors followed the written procedures step-by-step, used proper techniques, and had excellent equipment. The air sampler was kept at a steady appropriate flow rate. Sample collection times were measured with a stop watch. The plastic filter envelopes were properly labeled.

OCFA 11. The objective to demonstrate the ability to communicate with all appropriate locations, organizations, and field personnel was met. Clear radio communications were established and maintained between the OEOC and the radiological field monitoring team via the Local Government Radio Network.

DEFICIENCIES

There were no Deficiencies observed for Orange County radiological field monitoring teams during this exercise.

AREAS REQUIRING CORRECTIVE ACTION

There were no Areas Requiring Corrective Action observed for Orange County radiological field monitoring teams during this exercise.

AREAS RECOMMENDED FOR IMPROVEMENT

There were no Areas Recommended for Improvement observed for Orange County radiological field monitoring teams during this exercise.

2.6.3 Field Activities

The seven objectives to be demonstrated in Orange County field activities were fully met.

OCFA 1. The objective to demonstrate the ability to mobilize staff and activate facilities promptly was met. Staff and equipment at West Point Tours (WPT) were promptly mobilized following a telephone call at 0915 from the Orange County EOC. Bus drivers were called by dispatchers who used a current list; some reported in as directed, to be on standby at the WPT base. WPT notified other bus companies as called for in Orange County procedures. Bosch, a bus company with emergency responsibilities for school evacuation, was notified by WPT throughout the exercise in a timely manner. Bosch was notified by WPT to run a school bus from Sacred Heart School approximately one minute (at 1256) after WPT received the call from the EOC. Bosch began the route at 1314.

The Temple Hill School reception center was activated at 1130 by a call to the Reception Center Supervisor who, in turn, called his staff. The reception center was operational by 1330. Staff members reported from the ARC, the police, and the following county departments: Social Services, Aging, Mental Health, and Public Works. Representatives from the Sheriff's Office would normally be present; however, because of an incident at the county jail, their responsibilities, e.g., monitoring, were assumed by others. The call to activate the congregate care center at the North Jr. High School in Newburgh was received by the ARC supervisor at approximately 1330. In accordance with the exercise objectives, the congregate center was staffed by 1530 with three ARC workers.

OCFA 5. The objective to demonstrate the organizational ability and resources necessary to manage an orderly evacuation of all or part of the plume EPZ was met. A general population evacuation route (#132) was run by WPT in response to a free play message interjected at 1210. Each of the WPT evacuation route bus drivers is trained to be familiar with all evacuation routes for which WPT is responsible. Before departing, a bus driver is given a briefing (about the route and the location of the reception center) and a schematic strip map with this information and with geographical landmarks. The well trained bus driver that drove #132 knew the bus route and potential evacuee locations. The driver began the bus route at 1238 and, driving at normal speeds, arrived at the Temple Hill School reception center at 1310.

OCFA 6. The objective to demonstrate the organizational ability and resources necessary to control access to an evacuated area was met. At 1034, a Sheriff's deputy arrived at the intersection of U.S. Routes 6 and 9W (the Bear Mountain Traffic Circle) in response to a call received at the Sheriff's Office out of sequence at approximately 1005. At 1044, two Public Works trucks arrived with barricades and signs. The deputy was familiar with evacuation routes and reception center locations, but could not establish specific traffic restrictions because the demonstration was out of sequence and initiating free play message did not specify which ERPAs were being evacuated.

OCFA 9. The objective to demonstrate the adequacy of procedures for registration and radiological monitoring of evacuees was met. The reception center was set up adequately with an appropriate configuration of furniture and separate pathways for uncontaminated and contaminated evacuees. Immediately upon entrance, an evacuee is monitored for radioactive contamination. This was done in an average time of 90 seconds per individual. There is a roster of ten (2 teams of 5 persons per shift) to do radiological monitoring. This complement is sufficient to monitor 20% of Orange County's population within the 10-mile EPZ within 12 hours of arrival, which could be expected to arrive at this reception center. There was appropriate provision for storage of the personal effects of contaminated individuals and the staff was knowledgeable about personal decontamination procedures. Wheel chair ramps have been installed and the staff was sensitive to the needs of a "handicapped" evacuee who presented himself.

The Temple Hill School reception center encompasses a multiplicity of activities, involving set-up of furniture and equipment, registration, radiological monitoring and decontamination, storage of personnel effects, waiting for transportation, and support requirements and equipment for extended operation. There is only a general set of procedures available and it does not cover in detail all of the organization, staff responsibilities, equipment, supplies, configurations, etc., needed for the above activities. It is recommended that a standard operating procedure, specific to the Temple Hill School but based on a format common to all reception centers, be prepared. This standard operating procedure should cover the mission of the facility, provide detailed procedures on organization, physical layout, and equipment, and delineate staff responsibilities for all of the activities of the reception center. Its availability would enhance operations, and it would serve as a guide for replacement personnel who may have to serve at the center on short notice. This planning issue needs to be addressed in the next submission of the off-site Orange County Radiological Emergency Response Plan for evaluation by the RAC.

Previous ARCA (Orange 29 and 31) from IPNPS Supplement to the PEA Version 2, dated September 16, 1987 have been corrected and were verified during this exercise.

OCFA 10. The objective to demonstrate the adequacy of facilities for mass care of evacuees was met. North Jr. High School in Newburgh was activated as a congregate care center for this exercise. It is a large, well equipped facility in which approximately 1,000 evacuees can be housed, fed, and cared for. The ARC shelter manager had a major portion of the lower level of the building set up as a congregate care center. It comprised 2 gymnasiums, a cafeteria, showers and toilets, a shelter manager's office, nurses' station, and activities rooms.

OCFA 11. The objective to demonstrate the ability to communicate with all appropriate locations, organizations, and field personnel was met. There was adequate communications among the OEOC, the Sheriff's Office, and the deputy manning the access and traffic control point at the Bear Mountain traffic circle. Communications involving the general population (WPT) and the school (Bosch) evacuation buses were well

demonstrated during the exercise. In accordance with procedures, communication from the OEOC to Bosch was relayed by WPT via telephone. Because of mountainous terrain along portions of evacuation routes, there are dead areas in radio transmission between a bus and a base. WPT circumvents this problem by having bases in both Newburgh and Highland Falls. Bosch buses are equipped with two radios; one to communicate with its base, the other to communicate with WTPs bases. During the school bus evacuation run, when Storm King Mountain interfered with communications with the Bosch base, the driver used the other radio to establish contact with a WPT base.

Adequate telephone communications were demonstrated between the congregate care center in Newburgh and the OEOC. The objective did not require demonstration of the alternate radio communications link manned by an amateur radio operator. A radio in a vehicle adjacent to the reception center was the primary communications with the OEOC. This was used throughout the exercise with commercial telephone as backup. Although adequate, the system of running messages to and from the radio vehicle was cumbersome. It is recommended that a portable radio be assigned to the reception center during periods of activation.

OCFA 12. The objective to demonstrate the organizational ability and resources necessary to effect an orderly evacuation of schools within the plume EPZ was met. In response to a free play message at 1250 to run a school bus for Sacred Heart School in Highland Falls, a bus was dispatched from Bosch promptly and arrived at the school at 1313. Following instructions via radio from the dispatcher, the bus began the route to the designated relocation center at South Jr. High School in Newburgh. The bus arrived at the relocation center at 1337.

DEFICIENCIES

No Deficiencies were observed in the Orange County field activities during this exercise.

AREAS REQUIRING CORRECTIVE ACTION

No Areas Requiring Corrective Action were observed in the Orange County field activities during this exercise.

AREAS RECOMMENDED FOR IMPROVEMENT

1. **Description:** Communications between the OEOC and the reception center at the Temple Hill School were by use of a radio mounted in a vehicle adjacent to the reception center. This technique proved to be cumbersome since messages had to be relayed between the reception center and the vehicle.

Recommendation: A portable radio transceiver should be assigned to the reception center during periods of activation.

2.6.4 Emergency Worker Radiological Exposure Control

Two objectives were demonstrated for Orange County emergency worker radiological exposure control during this exercise. One objective was fully met, and one objective was partially met.

OCFA 7. The objective to demonstrate the ability to continuously monitor and control emergency worker exposure was met. Radiological field monitors, emergency workers at the reception center at the Temple Hill School, and bus drivers, Sheriff's deputies, and Department of Public Works personnel who entered the 10-mile EPZ were all equipped with record cards, permanent record TLD dosimeters, high range (0-200 R) direct reading dosimeters (DRDs), and mid-range DRDs (either 0-5 R or 0-20 R). Radiological field monitors were also equipped with low range DRDs (0-200 mR).

These emergency workers were generally knowledgeable about radiological exposure control procedures and read their DRDs at approximately 15-minute intervals. Members of the field monitoring team had the required dosimetry, read dosimetry on a regular basis, and were aware of the maximum allowable dose to which they could be exposed without authorization, and were aware of how to obtain that authorization.

Both the bus driver from WPT, who drove Route #132, and the bus driver from Bosch, who drove to Sacred Heart School, were thoroughly trained in radiological exposure control. All of the bus company's evacuation route drivers have received full training in a course taught by the utility, Orange County, and the company personnel. They have also had two refresher courses in 1988.

Staff at the reception center at Temple Hill School were provided with the required dosimetry equipment and displayed the results of instruction in their use. Staff within the center were knowledgeable of decontamination of individuals, which personnel outside were aware of procedures to decontaminate vehicles.

The Sheriff's deputy dispatched to the traffic control point was knowledgeable of the county's 1 R, 3 R, and 5 R dose limit scheme. However, the Public Works personnel who delivered the barricades, although knowledgeable of most aspects of radiological exposure control, were not familiar with these allowable dose limits and should receive further training.

Previous ARCAs (Orange 35, 36 and 41) from IPNPS Supplement to the PEA Version 2, dated September 16, 1987 have been corrected and were verified during this exercise. The correction of ARCA Orange 37 was reflected in the June 23, 1987 PEA. Previous ARCA (Orange 38) remains uncorrected and requires demonstration at the next Indian Point exercise.

OCFA 8. The objective to demonstrate the ability to supply and administer KI, if the decision has been made to do so was met. Emergency workers were aware of the procedures regarding the distribution of KI and the individual responsible for authorizing the administration of KI. Even though the State determined that radioactive releases from IP-3 were not substantial enough to require administration of KI, emergency workers were provided KI with their dosimetry before dispatch to the field.

There were adequate supplies of KI at the OEOC, reception center, bus companies, and in the radiological field monitors' equipment case. The KI was usable; the August 1987 expiration date on the bottles was extended to June 30, 1988, by the manufacturer's letter. The release pathway was such that little radioiodine was released from the plant during the exercise. Administering KI was considered during discussions of protective actions; however, the decision not to do so was easily made because the scenario did not call for an iodine release that would require administration of KI. Emergency workers were knowledgeable about the procedure by which its use is authorized. KI was not available at the congregate care center in Newburgh as it is 15 miles beyond the EPZ.

A previous ARCA (Orange 39) from IPNPS Supplement to the PEA Version 2, dated September 16, 1987 has been corrected and was verified during this exercise.

DEFICIENCIES

There were no Deficiencies observed for Orange County's emergency worker exposure control during the exercise.

AREAS REQUIRING CORRECTIVE ACTION

There were no new Areas Requiring Corrective Action observed for Orange County's emergency worker exposure control during the exercise.

AREAS RECOMMENDED FOR IMPROVEMENT

There were no Areas Recommended for Improvement for Orange County's emergency worker exposure control during this exercise.

2.6.5 School Interviews

OCFA 12. The objective to demonstrate the organizational ability and resources necessary to effect an orderly evacuation of schools within the plume EPZ was met. At one school in Orange County, an interview was conducted to evaluate the degree of preparedness at the school. The principal of the Highland Falls Elementary School located in Highland Falls, New York, in the Highlands Central School District was contacted and interviewed. A preselected series of questions was asked by the federal evaluator.

The parents of school children are notified of the county's protective action decisions regarding the closing of schools through EBS. The principal interviewed at the schools in Orange County had a good knowledge of the established school emergency procedures. Early dismissal of the schools is implemented upon recommendation from the District Superintendent. A written call-down list is used to make telephone calls to parents. The notification list is developed and periodically updated, with current home and emergency telephone numbers of parents, by written request of the schools.

The school has written procedures and parents are kept informed through school publications which contain the addresses of the designated relocation centers.

The official interviewed was familiar with the chain of command that would be involved during an evacuation. Estimates of evacuation times and procedures were known.

DEFICIENCIES

There were no Deficiencies observed during the school interviews.

AREAS REQUIRING CORRECTIVE ACTION

There were no Areas Requiring Corrective Action observed during the school interviews.

AREAS RECOMMENDED FOR IMPROVEMENT

There were no Areas Recommended for Improvement observed during the school interview.

2.6.6 Medical Drill

A medical drill for Orange County was conducted on November 23, 1987. A federal evaluator observed the demonstration of two objectives, both of which were met. Both objectives demonstrated for the Orange County medical drill one were fully met.

OCFA 13. The objective to demonstrate the adequacy of ambulance facilities and procedures for handling contaminated individuals was met. An injury with contamination was simulated by an individual posing as an evacuee at the Orange County reception center located at the Middletown High School The Horton Memorial Hospital was notified and requested to send an ambulance to the reception center. The ambulance crew performed proper medical procedures and communicated all appropriate information to the dispatcher. The crew also demonstrated good procedures in preventing the spread of contamination. An emergency worker from Orange County provided

radiological monitoring support for the ambulance crew. All personnel were provided with the proper dosimetry equipment. The ambulance and crew were monitored upon arrival at the hospital.

OCFA 14. The objective to demonstrate the adequacy of hospital facilities and procedures for handling contaminated individuals was met. The overall response provided by the Horton Memorial Hospital was good. Initial treatment, consisting of the removal of clothing, medical assessment, and medical treatment, was performed in the receiving area. Radiation surveys were performed and records were made by the Nurse/Recorder. Appropriate samples were collected, labeled, and properly documented. Decontamination priorities were established and conducted very efficiently. Proper techniques were used to avoid the spread of contamination, and waste was properly managed. Following the completion of the medical treatment to the individual, the staff demonstrated appropriate procedures for disrobing and monitoring themselves and the patient. Required dosimetry equipment was provided to all personnel and readings were taken and recorded.

Previous ARCAs (Orange 42 and 51) from IPNPS Supplement to the PEA Version 2, dated September 16, 1987 has been corrected and was verified during the November 23, 1987 medical drill.

DEFICIENCIES

There were no Deficiencies observed during the medical drill.

AREAS REQUIRING CORRECTIVE ACTION

There were no Areas Requiring Corrective Action observed during the medical drill.

AREAS RECOMMENDED FOR IMPROVEMENT

There were no Areas Recommended for Improvement observed during the medical drill.

2.7 PUTNAM COUNTY, NEW YORK

Thirteen objectives were to be demonstrated at the Putnam County EOC. One objective was not met (See Section 2.3.1, Deficiency 1 and JNC 3), eleven objectives were fully met, and one objective was partially met.

2.7.1 Putnam County Emergency Operations Center (PEOC)

PEOC 1. The objective to demonstrate the ability to mobilize staff and activate facilities promptly was met. The NUE ECL was received at the WP at 0724. The Sheriff's office telephoned the County Executive and County Civil Defense Director to initiate the staff call-up procedure. Full activation of the PEOC facility began at 0830. Full staffing was implemented following the Alert ECL, and the PEOC was operational at 0921. The call up rosters for partial and complete staffing and back up personnel were up-to-date.

PEOC 2. The objective to demonstrate the ability to fully staff facilities and maintain staffing around the clock was met. An actual shift change was demonstrated for the accident assessment group, PIO, and County Executive's incoming staff. When second-shift staff arrived during the afternoon, they were properly briefed by the outgoing staff. The 24-hour staffing capabilities for other EOC positions were documented by the presentation of a roster.

Previous ARCAs (Putnam 1 and 9) from IPNPS Supplement to the PEA Version 2, dated September 16, 1987 have been corrected and were verified during this exercise.

PEOC 3. The objective to demonstrate the ability to make decisions and to coordinate emergency activities was partially met. Command and control of the PEOC was maintained by the County Executive and the Deputy Director of Civil Defense, who served as the EOC Director during the exercise. These individuals were effectively in charge of the emergency operations as designated in the plan. Periodic briefings were held throughout the exercise during which all county agencies participated and provided updates on actions they had taken. All staff members were well trained and knowledgeable of their responsibilities.

However, in one instance, protective actions included in the EBS messages were verified at the time of communication with the Putnam County EOC rather than verifying with the County Executive after the message was drafted as specified in the plan. EBS message #5 did not advise people in ERPA #20 to evacuate as it was supposed to. This mistake was caught and the information was included in EBS #6, issued 47 minutes later.

PEOC 4. The objective to demonstrate the adequacy of facilities and displays to support emergency operations was met. The facility is small, although the available equipment is sufficient to support emergency operations. A uniformed officer maintained access control. Maps were in place depicting the county, IP-3, ERPAs, evacuation routes, relocation centers, TCP locations, radiological monitoring points, and populations by evacuation areas. The emergency classification levels were posted. Status boards were also in place in the radio communications and accident assessment area and were updated on significant events. Status boards in the radio communications and accident assessment areas were properly utilized. Backup power was available and demonstrated during the exercise.

Previous ARCA (Putnam 3 and 5) from IPNPS Supplement to the PEA Version 2, dated September 16, 1987 have been corrected and were verified during this exercise.

PEOC 5. The objective to demonstrate the ability to communicate with all appropriate locations, organizations, and field personnel was met. The primary communications system available at the PEOC is the RECS telephone, with several additional radio and telephone systems for backup. Hard copy capabilities were also available to interlink the PEOC with the SEOC and the EOF. A radio system that utilized a permanent repeater was used to maintain communications between PEOC staff and the field monitoring teams. No dead spots were reported for the county.

The accident assessment radio operator maintained a log for all field monitoring communications. Standard forms were used to receive data from field monitoring teams and to transmit requests to the field monitoring teams. Radiological information was properly and accurately transmitted in a timely fashion.

PEOC 6. The objective to demonstrate the ability to project radiation dosage to the public via plume exposure, based on plant and field data, and to determine appropriate protective measures, based on PAGs, available shelter, evacuation time estimates, and all other appropriate factors was met. Meteorological and release data were made available by the licensee. Information was received by telefax and over the MIDAS system.

The accident assessment team made dose calculations based on release data, time of release after shutdown, wind speed and dispersion models. Depending on the wind speed and dispersion model, several overlays were used during the exercise to indicate the projected plume pathway. Calculations were made properly and promptly and checked against those prepared by the utility. Because of the scenario, the field teams took only one complete set of readings, which were effectively transmitted. Monitoring data was plotted on a map.

Decisions on PARs resulted from discussions between the accident assessment personnel and the County Executive. The formulation of PARs was based on the plant status, evacuation time estimates and projected weather conditions. During the exercise, PARs included early school dismissal and the inclusion of ERPAs 16, 17, 18, 19, 20 and 23 in the evacuation of the county.

PEOC 7. The objective to demonstrate the ability to alert the public within the 10-mile EPZ, and disseminate an initial instructional message, within 15 minutes was not met due to a New York State Deficiency (See Section 2.3.1, Deficiency 1 and JNC 3). Message content, siren sounding (simulated), and EBS air times were synchronized with each jurisdiction. Siren activation (simulated) and specific air time for all EBS messages subsequent to EBS message 1 were all within the prescribed 15-minute interval from the decision time.

Public alerting activities were coordinated among four counties and the SEOC staff. Decision-making was timely and was followed by siren implementation (simulated). Simulated route alerting activities were also implemented by the appropriate police/sheriff departments. (At 1127, a message was inserted indicating siten #80 had failed. Communications went well at the EOC and deployment of route alerting was simulated). Contact was made with the affected areas and police were dispatched. Route maps and written messages to be read over the public address systems were available.

A previous ARCA (Putnam 6) from IPNPS Supplement to the PEA Version 2, dated September 16, 1987 has been corrected and was verified during this exercise.

PEOC 8. The objective to demonstrate the ability to provide advance coordination of information released was met. The Putnam County PIO's communication and interaction with the JNC was excellent. The PIO provided the County Executive with a hard copy of periodic information updates.

Previous ARCAs (Putnam 52, 55, 56 and 57) from IPNPS Supplement to the PEA Version 2, dated September 16, 1987 have been corrected as a result of the submittal of the February 5, 1988 annual letter of certification and subsequent review by FEMA Region II.

PEOC 9. The objective to demonstrate the organizational ability and resources necessary to manage an orderly evacuation of all or part of the plume EPZ was met. Traffic control was initiated and the reception centers activated in a timely fashion. The evacuation decision resulted from the extended staff discussions, particularly between the accident assessment staff and the County Executive. The decision was based on degrading plant conditions and projected weather.

PEOC 10. The objective to demonstrate the organizational ability to deal with impediments to evacuation, such as inclement weather or traffic obstruction was met. A free-play traffic impediment message was inserted at 1300 hours. The Civil Defense Director discussed this problem with agency representatives from the Highway Patrol, and a solution was developed. A dump truck and barricades were dispatched to remove the impediment, or re-route traffic as necessary. Additional equipment, gravel and manpower were available.

A previous ARCA (Putnam 7) from IPNPS Supplement to the PEA Version 2, dated September 16, 1987 has been corrected and was verified during this exercise.

PEOC 11. The objective to demonstrate the organizational ability necessary to control access to an evacuated area was met. The Civil Defense Director coordinated the identification and activation of traffic control points with the Police/Sheriff staff. The traffic control locations were plotted on a map.

PEOC 12. The objective to demonstrate the ability to supply and administer KI, once the decision has been made to do so was met. Even though the State determined that radioactive releases from IP-3 were not substantial enough to require administration of KI, emergency workers were provided KI with their dosimetry before dispatch to the field.

An adequate supply of KI was in place for county emergency workers. A letter was available from the KI supplier to Con Edison advising that the FDA had granted an extension of one year to the shelf-life printed on the KI bottle labels (extended to 8/88). Accident assessment personnel and the County Executive discussed the use of KI and the authorization procedures that would be initiated at the state level.

A previous ARCA (Putnam 8) from IPNPS Supplement to the PEA Version 2, dated September 16, 1987 has been corrected and was verified during this exercise.

PEOC 13. The objective to demonstrate the organizational ability and resources necessary to evaluate mobility-impaired persons was met. A nurse maintained a list of the home-bound mobility-impaired and their special needs. An ambulette equipped for the handicapped and staffed with a driver, two radio communicators, and a nurse was dispatched to transport evacuees. This team had a map and route available to complete the pick-up of two individuals. The transit time from the dispatch point to the first pick-up was 20 min, while the second pick-up was 5 minutes from the first. These pick-up points were promptly located. Messages to and from the ambulette staff were relayed by high frequency radio. Dosimetry and KI were available.

DEFICIENCIES

There were no Deficiencies observed in the PEOC during this exercise.

AREAS REQUIRING CORRECTIVE ACTION

1. **Description:** The County Executive did not verify the contents of the decided upon protective action for Putnam County in EBS message #5 before broadcast of the message (NUREG-0654, II, E.5, G.3.b).

Recommendation: The procedure in the plan should be followed.

AREAS RECOMMENDED FOR IMPROVEMENT

There were no Areas Recommended for Improvement observed in the PEOC during this exercise.

2.7.2 Field Monitoring Teams

The four objectives to be demonstrated by the Putnam County field monitoring teams were fully met.

PCFA 2. The objective to demonstrate the ability to mobilize and deploy field monitoring teams in a timely manner was met. Team members were contacted by amateur radio operators and reported to the PEOC by 0740. They were then dispatched from PEOC at 1245, arriving at their first assigned monitoring location at 1310.

PCFA 3. The objective to demonstrate appropriate equipment and procedures for determining ambient radiation levels was met. The county volunteer field monitoring team had low-range gamma survey instruments, including a CDV-700 GM instrument and a commercial GM survey instrument. The team had a CDV-715 ionization chamber as well as a commercial ionization chamber instrument available for high range monitoring. All instruments were operationally checked for operation and accuracy before deployment.

The team was well trained and demonstrated proper procedures for use of instrumentation, monitoring, and data logging. The team had appropriate maps and written descriptions of monitoring sites and were able to find monitoring locations promptly.

PCFA 4. The objective to demonstrate appropriate equipment and procedures for measurement of airborne radioiodine concentrations as low as 10^{-7} μCi/CC in the presence of noble gas was met. The field monitoring team radiation measurement systems included a 0.05-100 mR/hr GM counter, and alpha and beta counters. The team also had a CDV-700 GM survey instrument equipped with a Victoreen 6306 tube. Air sampling equipment included a 12-v DC-powered air sampler and charcoal and silver zeolite cartridges. The air sampler was appropriately calibrated and the team members demonstrated calibration procedures. The team made both air and ground readings and collected air samples. Samples were properly labeled and logged with time, date, location and name of team member. In demonstrating measurement of radioiodine levels in the air, the team followed written procedures that were adequate to detect concentrations as low as 10^{-7} μCi/CC of radioiodine in the presence of noble gases. The team members displayed exceptional and efficient work.

PCFA 11. The objective to demonstrate the ability to communicate with all appropriate locations, organizations, and field personnel was met. Clear radio communications were established and maintained between the PEOC and the radiological field monitoring team. Communication capabilities and procedures were adequate.

DEFICIENCIES

There were no Deficiencies observed for the Putnam County field monitoring teams during the exercise.

AREAS REQUIRING CORRECTIVE ACTION

There were no Areas Requiring Corrective Action observed for the Putnam County field monitoring teams during the exercise.

AREAS RECOMMENDED FOR IMPROVEMENT

There were no Areas Recommended for Improvement observed for the Putnam County field monitoring teams during the exercise.

2.7.3 Field Activities

There were eight objectives to be demonstrated for Putnam County field activities. Seven objectives were fully met, and one objective was partially met.

PCFA 1. The objective to demonstrate the ability to mobilize staff and activate facilities promptly was met. The TCP at the intersection of Routes 9 and 301 was activated by a sheriff's deputy at 1020. The deputy assigned to St. Basil Academy arrived at 1315. The Putnam County Highway crew arrived with barricades five minutes later.

Because of prepositioning of personnel, mobilization of radiological monitors at the reception center located at Van Wyck Junior High School was not evaluated.

PCFA 5. The objective to demonstrate the organizational ability and resources necessary to manage an orderly evacuation of all or part of the plume EPZ was partially met. A free-play message was introduced by the controller at 1200 directing the running of general population bus route #88. The message was dispatched to the bus company from the PEOC at 1202. The bus left the depot at 1210 and completed the tenth pickup at 1250. However, two stops were missed. The first was missed because a number was missing on a mail box (#134) and the second was missed because an intersection was not marked. The driver was aware of the missed stops and was able to note the approximate locations by noting the mileage between points. The bus reached the reception center at

1340. The bus driver was familiar with the evacuation route (#88) and the location of the reception/care center.

Previous ARCAs (Putnam 28, 29 and 31) from IPNPS Supplement to the PEA Version 2, dated September 16, 1987 has been corrected and was verified during this exercise.

PCFA 6. The objective to demonstrate a sample of resources necessary to deal with impediments to evacuation, as inclement weather or traffic obstruction was met. A free-play message simulating an impediment (a road washout) was introduced by the controller at 1300. The location was Route 9D - Garrison, north of Cold Springs. The message was dispatched from the PEOC to the Sheriff's office at 1302 and to the county and state Highway Departments at 1307. The emergency response units arrived at the field location at 1317. A dump truck with barricades arrived on the scene promptly and additional manpower, material and equipment was readily available.

PCFA 7. The objective to demonstrate the organizational ability and resources necessary to control access to an evacuated area was met. A free-play message to establish a TCP at the intersection of Routes 9 and 301 in Cold Springs was introduced by the controller at 1000. The message was dispatched from the PEOC to the County Sheriff's office at 1002. The Deputy arrived at the field location at 1020. The officer was familiar with the evacuation route and the location of two reception centers.

PCFA 10. The objective to demonstrate the adequacy of procedures for registration and radiological monitoring of evacuees was met. Registration procedures following monitoring were demonstrated after the evacuees were monitored and declared "clean." Forms were filled out at various stations providing registration information on each evacuee. Assuming 90 seconds/person, Putnam County has the capability to register and monitor 20% of the population in the Putnam County EPZ.

The facility was equipped and staffed to handle mobility-impaired evacuees as well as to provide crisis counseling and nursing. Ready access to hospital care was available. Information was available to evacuees about the emergency situation.

PCFA 11. The objective to demonstrate the organizational ability and resources necessary to effect an orderly evacuation of mobility-impaired individuals within the plume EPZ was met. The controller introduced a free-play message at the PEOC at 1000 directing the evacuation of two mobility-impaired individuals on Brookdale Road and on Lake Shore Drive in Mahopac, New York. The message was transmitted from the EOC by radio and telephone to the County Office of Aging. One 12-seat ambulette, staffed with crew and a nurse, was dispatched at 1015. The crew had medical histories available for both patients and were trained in procedures for transporting the patients to the reception center. They arrived at the pickup points at 1035 and 1040. The pickups were simulated and the ambulette then returned to their dispatch point rather than the

reception center. However, the driver knew the appropriate route to the reception center.

A previous ARCA (Putnam 30) from IPNPS Supplement to the PEA Version 2, dated September 16, 1987 has been corrected and was verified during this exercise.

PCFA 12. The objective to demonstrate the ability to communicate with all appropriate locations, organizations, and field personnel was met. Communications were evaluated at the following field locations: TCP, impediment to evacuation north of Cold Springs, the bus for general population evacuation, the ambulette for non-institutionalized mobility-impaired, the reception center and radiological field monitoring teams. All locations were supplied with two-way radio communications equipment. Sheriff's deputies and county highway workers had the county radio system available and were able to communicate with the PEOC, the police and other stations. The reception center also had the county radio system available as well as commercial telephone and two RACES amateur radio operators with 2-meter band equipment. The general population evacuation bus was able to communicate to the bus dispatcher. All locations demonstrated adequate communications capability and procedures. Some "dead spots" were noted for the bus when near the reception center which is located relatively far from the main bus garage. An intervening range of hills probably contributes to the loss of communication.

Previous ARCAs (Putnam 2 and 32) from IPNPS Supplement to the PEA Version 2, dated September 16, 1987 have been corrected and were verified during this exercise.

PCFA 13. The objective to demonstrate the organizational ability and resources necessary to effect an orderly evacuation of schools within the plume EPZ was met. A free-play message was introduced by the controller at 1230 to run a school bus to evacuate St. Basil's Academy. The message was transmitted from the PEOC at 1232 to the bus garage for the Mahopac School District. The bus was dispatched after approximately 1233. The crew was provided with adequate instructions and maps. The bus arrived at St. Basil's Academy at 1320 and at the reception center at 1339.

A previous ARCA (Putnam 54) from IPNPS Supplement to the PEA Version 2, dated September 16, 1987 has been corrected as a result of the submittal of the February 5, 1988 annual letter of certification and subsequent review by FEMA Region II.

DEFICIENCIES

There were no Deficiencies observed for Putnam County field activities during the exercise.

AREAS REQUIRING CORRECTIVE ACTION

1. **Description:** The general population bus driver missed two stops on the bus route. The first was missed because a number was missing on a mail box (#134) and the second was missed because an intersection was not marked (NUREG-0654, II, J.10.g).

   Recommendation: Though the driver was aware of the missed stops, additional training is necessary regarding the location of stops along each bus route. Road markings need to be readily visible for all bus stops.

AREAS RECOMMENDED FOR IMPROVEMENT

There were no Areas Recommended for Improvement observed for Putnam County field activities during the exercise.

2.7.4 Emergency Worker Radiological Exposure Control

Both objectives to be demonstrated for Putnam County emergency worker radiological exposure control during this exercise objective were fully met.

PCFA 8. The objective to demonstrate the ability to continuously monitor and control emergency worker exposure was met. Putnam County emergency workers involved in demonstrating this objective included bus drivers for general population evacuation and for school evacuation, a sheriff's deputy and highway personnel at a TCP and impediment field location, radiological monitors at the reception center, and a field monitoring team. All workers had low-range (0-200 mR) or mid-range (0-5 R or 0-20 R) dosimeters. The radiological monitors at the reception center, the school bus driver, and the field monitoring team also had high-range (0-200 R) dosimeters. All workers carried some permanent record dosimeter (film badge or TLD) and record-keeping charts.

With minor exceptions, all dosimeters were properly zeroed or initial values recorded. Emergency workers read and recorded values at appropriate intervals and knew what to do in the event they received an excess dose. The bus driver for general bus evacuation Route #88 was briefed and issued dosimetry and instructions by 1200.

Protective equipment (anti-contamination suits, boots, gloves and tongs) were available for the field team, reception center and sheriff's deputy.

Previous ARCAs (Putnam 36, 37, 38, 43 and 44) from IPNPS Supplement to the PEA Version 2, dated September 16, 1987 have been corrected and were verified during this exercise.

PCFA 9. The objective to demonstrate the ability to supply and administer KI, if the decision has been made to do so was met. Emergency workers were aware of the procedures regarding the distribution of KI and the individual responsible for authorizing the administration of KI. Even though the State determined that radioactive releases from IP-3 were not substantial enough to require administration of KI, emergency workers were provided KI with their dosimetry before dispatch to the field.

All workers had unexpired potassium iodide available and were aware of proper procedures regarding when to take it, on whose authorization to take it, and procedures about recording dosage.

Previous ARCAs (Putnam 39 and 40) from IPNPS Supplement to the PEA Version 2, dated September 16, 1987 have been corrected and were verified during this exercise.

DEFICIENCIES

There were no Deficiencies observed for Putnam County emergency worker radiological exposure control during the exercise.

AREAS REQUIRING CORRECTIVE ACTION

There were no Areas Requiring Corrective Action observed for Putnam County emergency worker radiological exposure control during the exercise.

AREAS RECOMMENDED FOR IMPROVEMENT

There were no Areas Recommended for Improvement observed for Putnam County emergency worker radiological exposure control during the exercise.

2.7.5 School Interviews

PCFA 13. The objective to demonstrate the organizational ability and resources necessary to effect an orderly evacuation of schools within the plume EPZ was met. At three schools in Putnam County, interviews were conducted to evaluate the degree of preparedness for each school. Listed are the names of the schools, towns, and the school districts:

1.	Garrison Union Elementary School, Garrison, NY	Garrison Union Free School District
2.	Haldane Central Elementary School, Cold Springs, NY	Haldane Central School District

3. Putnam Valley Elementary School, Putnam Valley, NY — Putnam Valley Central School District

At each school either the principal or the superintendent was contacted and interviewed. A preselected series of questions was asked at each school by the federal evaluator.

The parents of school children are notified of the county's protective action decisions regarding the closing of schools through news releases. The authorities interviewed at each of the schools in Putnam County had a good knowledge of the established school emergency procedures. Early dismissal of each of the schools is implemented upon recommendation from the District Superintendent. A written call-down list is used to make telephone calls to parents. The notification list is developed and periodically updated, with current home and emergency telephone numbers of parents, by written request of the schools.

All schools have written procedures and parents are kept informed through school publications which contain the addresses of the designated relocation centers.

All officials interviewed were familiar with the chain of command that would be involved during an evacuation. Estimates of evacuation times and procedures were known.

A previous ARCA (Putnam 53) from IPNPS Supplement to the PEA Version 2, dated September 16, 1987 has been corrected as a result of a change to the off-site Putnam County Radiological Emergency Response Plan and subsequent review by FEMA Region II.

DEFICIENCIES

There were no Deficiencies observed during the school interview.

AREAS REQUIRING CORRECTIVE ACTION

There were no Areas Requiring Corrective Action observed during the school interviews.

AREAS RECOMMENDED FOR IMPROVEMENT

There were no Areas Recommended for Improvement observed during the school interviews.

2.7.6 Medical Drill

A medical drill for Putnam County was conducted on December 9, 1987. Two objectives were demonstrated for the Putnam County medical drill and both were partially met.

PCFA 14. The objective to demonstrate the adequacy of ambulance facilities and procedures for handling contaminated individuals was partially met. This was demonstrated at the Putnam County congregate care center located at the George Fisher Middle School. A simulated automobile accident was staged in which a contaminated worker from the plant was injured. The ambulance was called at 1007 and arrived at the scene at 1037. Interim first aid was provided by an ARC volunteer at the center. The patient was properly isolated and medical treatment was given first priority. The steps used by the ambulance crew for handling the patient and the equipment used during treatment would have contaminated them. However, the crew was monitored and decontaminated by experienced personnel upon arrival at the hospital. The ambulance crew performed patient monitoring adequately and checked their dosimeters periodically.

A previous ARCA (New York State 2) from IPNPS Supplement to the PEA Version 2, dated September 16, 1987 has been corrected and was verified during the December 9, 1988 Putnam County medical drill.

PCFA 15. The objective to demonstrate the adequacy of hospital facilities and procedures for handling contaminated individuals was partially met. The patient was delivered by the ambulance to the Putnam Medical Center at 1125. The emergency room was properly set up, secured and ready to accept the patient for treatment. The ambulance and its crew were checked for contamination using proper equipment and techniques. Medical treatment was prompt and proper. The patient was monitored periodically and vital signs taken often. The Nurse/Recorder recorded all of the above information on the proper form.

While decontaminating the patient, the emergency room staff placed him on a cloth sheet and then allowed the water used to wash the contamination off the patient's wounds to run onto the sheet instead of into the special holding container provided. The saturated, contaminated sheet was never changed or removed until the close of the drill. This would have resulted in the spread of contamination to the patient, hospital personnel, and equipment. In addition, the patient had been lying on his back directly in the contaminated water and his back was never monitored. This step should have been taken both during the treatment phase and before the patient received clearance to be transported out of the emergency room area.

Previous ARCAs (Putnam 60 and 61) from IPNPS Supplement to the PEA Version 2, dated September 16, 1987 have been corrected as a result of the submittal of the February 5, 1988 annual letter of certification and subsequent review by FEMA Region II.

DEFICIENCIES

There were no Deficiencies observed in the medical drill.

AREAS REQUIRING CORRECTIVE ACTION

1. **Description:** The techniques used by the ambulance crew for the handling of the patient and the equipment used during treatment, would have contaminated them (NUREG 0654, II, K.5.b).

   Recommendation: The ambulance crew should receive additional training in procedures to limit the spread of contamination.

2. **Description:** The steps used while performing medical treatment to the injured patient did not limit the spread of contamination. The water used to wash contamination off the patient collected on the sheet under him, needlessly contaminating him and the equipment. In addition, the patient was not properly monitored during the treatment (NUREG 0654, II, K.5.b)

   This is the same ARCA as listed under the Westchester County medical drill in Section 2.4.6 and will not be duplicated within the Tables in Section 4 since the primary (and backup) hospital(s) on the east side of the river are mutually shared by Westchester County and Putnam County.

   Recommendation: The emergency room staff should receive additional training in the proper techniques to limit the spread of contamination.

AREAS RECOMMENDED FOR IMPROVEMENT

There were no Areas Recommended for Improvement observed during the medical drill.

2.8 DUTCHESS COUNTY, NEW YORK

2.8.1 Dutchess County Emergency Operations Center (DEOC)

DEOC 1. The objective of demonstrate the ability to fully staff facilities and maintain staffing around the clock was met. Dutchess County provided reception and congregate care centers in support of Putnam and Westchester counties' evacuation activities. The Dutchess County EOC was notified of the Alert at 0858. By 0915, all staff were notified and instructed to report to the EOC. The facility was operational and staffed by twenty agencies identified in the plan by 1025. In most cases, the agencies demonstrated double staffing to satisfy the around-the-clock capability as well as for training. Second-shift rosters were also available and the personnel were contacted during the exercise. The communications staff demonstrated a shift change. All staff members were well-trained and knowledgeable of their roles. They carried out their responsibilities in an efficient, professional manner. The county plan and procedures were used by the staff throughout the course of the exercise. Staff briefings were held at hourly intervals supplemented with important update announcements as conditions changed.

A previous ARCA (Dutchess 1) from IPNPS Supplement to the PEA Version 2, dated September 16, 1987 has been corrected and was verified during this exercise.

DEFICIENCIES

No Deficiencies were observed in the Dutchess County EOC during the exercise.

AREAS REQUIRING CORRECTIVE ACTION

There were no Areas Requiring Corrective Action observed in the Dutchess County EOC during the exercise.

AREAS RECOMMENDED FOR IMPROVEMENT

There were no Areas Recommended for Improvements observed in the Dutchess County EOC during the exercise.

2.8.2 Field Activities

Both objectives to be demonstrated for Dutchess County field activities were fully met during the exercise.

DCFA 1. The objective of demonstrating the adequacy of procedures for registration and radiological monitoring of evacuees was met. The Department of Social Services was responsible for registration and monitoring of evacuees. A total of 150 individuals were available to staff the county's reception centers. All county reception centers were predesignated in the plan to specifically host the ERPAs for which Dutchess County is responsible. At the Van Wyck reception center, the staff was well trained in radiological monitoring and registration procedures. Appropriate equipment was available to perform these functions. The ARC acts as liaison to inform the reception center when a congregate care center is reaching capacity and where the next center will be opened.

The first evacuees arrived at the reception center by bus from Putnam County at 1340. Evacuees were first monitored for potential contamination by trained radiological monitors. The reception center was very well set up for monitoring, with paper placed on floor, monitoring stations at entrances, protective clothing for monitors, proper instruments and procedures. Males and females were provided separate facilities for decontamination. More severe cases would be handled by a nearby hospital. Contaminated articles were placed into plastic bags. Overall, there was extreme attention to details and the demonstration was superior in every facet.

The reception center was carefully arranged to keep potentially contaminated evacuees separated from clean evacuees. Precautions were taken to limit the spread of contamination. Evacuees were monitored, registered, and directed to the congregate care center. Vehicle monitoring and decontamination procedures were not demonstrated. Fifty volunteer monitors were available to staff county reception centers. However, some concern was expressed that from a planning standpoint, it was difficult to insure an adequate number of volunteers would be available to handle the evacuees within the mandatory 12-hour period. It was suggested that the use of portal-monitors at the reception centers would speed the process significantly. This planning issue needs to be addressed in the next submission of the off-site Dutchess County Radiological Emergency Response Plan for evaluation by the RAC.

A previous ARCA (Dutchess 2) from IPNPS Supplement to the PEA Version 2, dated September 16, 1987 has been corrected and was verified during this exercise.

DCFA 2. The objective to demonstrate the adequacy of facilities for mass care of evacuees was met. The shelter staff, located approximately 60-70 miles from IPNS, anticipated and could accommodate up to 1700 evacuees. Evacuees were checked for registration prior to entry and directed to monitoring and registration if they had not yet been registered. The facility had sleeping arrangements, toilets, drinking water, storage and parking to accommodate the anticipated number of evacuees. Institutional and local vendors could supply food supplies immediately and for the first 24 hours. The facility was more than adequate to meet the needs of a congregate care center and capable of serving 1,700 evacuees. The county ARC chapter manager was notified at 1030 and placed the appropriate staff on standby. The centers were activated on an as-needed basis. ARC staff were well-trained. An ARC representative was assigned to the DEOC to coordinate the congregate care requirements. Food supplies were provided by local

vendors. Some cots and blankets were available, but additional supplies were available by request from New York and Washington ARC offices. A nursing station was not established, but nurses were placed on standby and were available for duty. Ambulance support could be obtained through the county EOC. Direct communications were established with Dutchess County.

DEFICIENCIES

There were no Deficiencies were observed for Dutchess County field activities during the exercise.

AREAS REQUIRING CORRECTIVE ACTION

There were no Areas Requiring Corrective Action observed for Dutchess County field activities during the exercise.

AREAS RECOMMENDED FOR IMPROVEMENT

There were no Areas Recommended for Improvement observed for Dutchess County field activities during the exercise.

2.9 BERGEN COUNTY, NEW JERSEY

2.9.1 Bergen County Emergency Operations Center (BEOC)

Both objectives to be demonstrated in the Bergen County EOC during this exercise were fully met.

BEOC 1. The objective to demonstrate ability to mobilize staff and activate facilities promptly was met. The BEOC was activated and operational in a timely manner following the Alert ECL notification. The staff mobilization procedures were demonstrated in a satisfactory fashion. An up-to-date written call list was used for staff mobilization. According to the EOC staff, there is a regular system in place to (1) receive a call directing activation, and (2) call staff on a 24-hour basis on any day. Staff was mobilized in a prompt manner. The information flow from Rockland County to the Rockland County Liaison at the BEOC was generally good. It contributed towards the high efficiency achieved during the staffing procedures at the BEOC. The ability to promptly activate staff following notification of an Alert ECL and to increase staff needs in response to escalating emergency conditions was demonstrated successfully.

A previous ARCA (Bergen 2) from IPNPS Supplement to the PEA Version 2, dated September 16, 1987 has been corrected and was verified during this exercise.

BEOC 2. The objective to demonstrate adequacy of facilities and displays to support emergency operations was met. The BEOC had adequate space and furnishings to support emergency operations. It had sufficient light, furniture, telephones, and other equipment.

As recommended in the previous exercise, a status board, plume EPZ map and maps designating the locations of evacuation routes, reception centers, and congregate care facilities were posted in the BEOC. These displays were used effectively during the exercise. The status board was updated regularly during the exercise.

A previous ARCA (Bergen 3) from IPNPS Supplement to the PEA Version 2, dated September 16, 1987 has been corrected and was verified during this exercise.

DEFICIENCIES

There were no Deficiencies were observed in the BEOC during the exercise.

AREAS REQUIRING CORRECTIVE ACTION

There were no Areas Requiring Corrective Action observed in the BEOC during the exercise.

AREAS RECOMMENDED FOR IMPROVEMENT

There were no Areas Recommended for Improvement observed in the BEOC during the exercise.

2.9.2 Field Activities

BFA 1. The objective to demonstrate adequacy of facilities for mass care of evacuees was partially met. The congregate care center at Bergen Community College facility had enough sleeping accommodations, toilets, drinking water, storage, parking and other basic amenities required for extended operations. According to the shelter staff, approximately up to 2000 evacuees could be accommodated at this center. If needed, extra space could be obtained by securing adjacent main administration building in the campus. During this exercise, shelter staff was aware of the number of expected evacuees. The shelter had adequate staff and equipment to handle handicapped evacuees such as those in wheelchairs. A nursing station was also established at the center. Also available was a quick access to a hospital by ambulance transportation. A PIO was available to keep evacuees informed of emergency situation.

The evacuees were checked for registration cards at the door. According to the shelter manager, an evacuee arriving without a registration card will also be registered at the congregate care center. The manager did not know how to decontaminate the contaminated evacuees. Moreover, there was no place set up at this center for decontamination. It is recommended that the shelter manager be instructed on decontamination procedures and the decontamination facility be set up at an appropriate area in the center.

Appropriate positioning of Campus Police was observed at two traffic control points during this exercise.

A previous ARCA (Bergen 4) from IPNPS Supplement to the PEA Version 2, dated September 16, 1987 has been corrected and was verified during this exercise.

DEFICIENCIES

There were no Deficiencies observed for Bergen County field activities during the exercise.

AREAS REQUIRING CORRECTIVE ACTION

There were no ACRA's observed for Bergen County field activities during the exercise.

AREAS RECOMMENDED FOR IMPROVEMENT

1. **Description:** The shelter manager did not know how to decontaminate the contaminated evacuees. Moreover, there was no place set up at this center for decontamination (NUREG-0654, II, J.12, K).

   Recommendation 1: The shelter manager should be instructed on decontamination procedures and that the decontamination facility should be set up at an appropriate area in the center.

3 REMOVAL OF COMPLETED ARCA FROM PREVIOUS PEA

The following list summarizes those ARCAs identified in the Supplement to the Post Exercise Assessment (Version 2), dated September 16, 1987, which have been corrected and verified in previous exercises and are being removed from the chart provided in Section 4:

N.Y.S.E.O.C. (#s 1, 3, 4, 5, 6, 7, 8, 9, 10, 11, 12, 13, 15)

EOF (#s 1, 2, 3, 4, 5, 6)

JNC (#s 2, 6, 7, 8, 9, 10, 11)

Rockland EOC (#s 2, 6-10, 12-30, 34, 39-42, 44, 48-54, 59, 64, 65, 68)

Westchester EOC (#s 9-27, 30-35, 41, 44-56, 59-61, 63, 64, 66, 69, 71-73)

Putnam EOC (#s 4, 10-27, 33-35, 41, 42, 45-51, 58, 59)

Orange EOC (#s 5-27, 30, 32-34, 40, 43-47, 50)

Southern District (none)

Dutchess EOC (none)

Bergen EOC (#s 1, 5, 6)

The only ARCAs which will appear in Section 4 are those previous ARCAs which remain incomplete, have been completed as a result of the March 22, 1988 exercise, or are new ARCAs.

4 SUMMARY OF DEFICIENCIES AND AREAS REQUIRING CORRECTIVE ACTION

Section 4 of this report provides a schedule for the correction of Deficiencies or Areas Requiring Corrective Action noted during the March 22, 1988 exercise.

Tables 4.1.0 through 4.12.1 summarize recommendations to correct those Deficiencies or Areas Requiring Corrective Action identified during the exercise. These tables also include Areas Requiring Corrective Action identified in previous exercises which remain unresolved or have been rectified during this exercise.

TABLE 4.1.0 INDIAN POINT NUCLEAR POWER STATION —
SUMMARY OF DEFICIENCIES
March 22, 1988
NEW YORK STATE

No.	DEFICIENCY	NUREG-0654 FEMA-REP-1 Rev. 1, Reference[a]	FEMA Objective[b]	Exercise Date 3/22/88	Exercise Date Previous Exercises	Present Status[c]
1.	The initial EBS message would have taken 35 minutes to air. It is required to be aired in 15 minutes. This occurred because the staff at WABC did not follow EBS procedures, which were drafted in 1981. A new plan should be drawn up, including the current hot line number and all other changes and necessary information. The staff at WABC should be given additional training so that they are aware that in an emergency (1) an EBS message would be broadcast live over the hot line, and (2) the message would also be recorded. All staff who could be on duty during an emergency should be aware of these two points and of where a WABC plan is kept. Several people at the JNC should be knowledgeable of WABC's procedures, so that they can guide WABC personnel by telephone, if need be. Please note that this deficiency is a *State deficiency*, even though activities occurred at the JNC and WABC. Note: This deficiency was corrected during the March 29, 1988, EBS Remedial Drill.	E.6	12	X		C[d]

TABLE 4.1.1 INDIAN POINT NUCLEAR POWER STATION --
SUMMARY OF AREAS REQUIRING CORRECTIVE ACTION
March 22, 1988
NEW YORK STATE

No.	AREA REQUIRING CORRECTIVE ACTION	NUREG-0654 FEMA-REP-1 Rev. 1, Reference[a]	FEMA Objective[b]	Exercise Date 3/22/88	Exercise Date Previous Exercises	Present Status[c]
1.	Personnel participating in the medical drill in Putnam County expressed disappointment with the medical scenario provided by the State. Contamination levels were so low as to be almost insignificant, there were no changes in the patient's vital signs, and the patient was not moulaged. The scenario did not adequately test the hospital's capabilities. A more detailed medical drill scenario including changing vital signs after treatments, higher contamination levels so that contamination is a greater concern, moulage of the patient, and use of a State controller to provide contamination levels and medical information should be provided at the next full-scale exercise	L.1			6/4/86	C
2.	State Police at one traffic control point in Westchester County did not have permanent record dosimeters. State Police assigned to all TCPs should be equipped with permanent record dosimeters.	K.3.a			11/28/84	C

TABLE 4.2.1 INDIAN POINT NUCLEAR POWER STATION —
SUMMARY OF AREAS REQUIRING CORRECTIVE ACTION
March 22, 1988
SOUTHERN DISTRICT EOC

No.	AREA REQUIRING CORRECTIVE ACTION	NUREG-0654 FEMA-REP-1 Rev. 1, Reference[a]	FEMA Objective[b]	Exercise Date 3/22/88	Exercise Date Previous Exercises	Present Status[c]
	No Recommendations.					

TABLE 4.3.1 INDIAN POINT NUCLEAR POWER STATION —
SUMMARY OF AREAS REQUIRING CORRECTIVE ACTION
March 22, 1988
EMERGENCY OPERATIONS FACILITY

No.	AREA REQUIRING CORRECTIVE ACTION	NUREG-0654 FEMA-REP-1 Rev. 1, Reference[a]	FEMA Objective[b]	Exercise Date 3/22/88	Exercise Date Previous Exercises	Present Status[c]
	No Recommendations					

SUMMARY OF AREAS REQUIRING CORRECTIVE ACTION
March 22, 1988
JOINT NEWS CENTER

No.	AREA REQUIRING CORRECTIVE ACTION	NUREC-0654 FEMA-REP-1 Rev. 1, Reference[a]	FEMA Objective[b]	Exercise Date 3/22/88	Exercise Date Previous Exercises	Present Status[c]
1.	The rumor control number is for internal emergency workers' use, yet Orange County gave it out to the public in a news release at 0848. If this number is readily available, the rumor control system would be quickly flooded with calls and become inoperable. The rumor control number should not be provided to the public and all PIOs should be aware of this policy.	G.4.c		X		I
2.	EBS message #5 did not advise people in ERPA #20 to evacuate as it was supposed to. This mistake was caught and the information was included in EBS #6, issued 47 minutes later. The content of EBS messages needs to be reviewed and verified by the County Executive after the EBS message has been drafted and prior to release.	G.4.b	13	X		I
3.	Some school information was issued only via news releases and there was no information on EBS on how to obtain additional information on schools. A brief message should be included in the EBS message on how to obtain information on schools.	G.4.b	13	X		I
4.	Protective actions included in the messages were verified at the time of communication with the EOCs rather than verifying with the County Executives after the message was drafted as specified in the plan. The procedure in the plan should either be followed or this procedure should be modified to reflect actual practice. • Putnam County	G.4.b	13	X	6/4/86	I
5.	For both Orange and Westchester Counties the second shift public information officers had been at the JNC for several hours of the first shift. During this time they functioned as JNC staff. In future exercises, second shift PIOs should not supplement the staff or be present during the first shift.	A.4			6/4/86	C

TABLE 4.4.1 (Cont'd)

No.	AREA REQUIRING CORRECTIVE ACTION	NUREG-0654 FEMA-REP-1 Rev. 1, Reference[a]	FEMA Objective[b]	Exercise Date 3/22/88	Exercise Date Previous Exercises	Present Status[c]
6.	Calls to the 800 telephone number in the Westchester County brochure from simulated citizens did not elicit reference to the rumor control number. Also, there was no answer from the Rockland County number. PIO and other personnel at the county EOCs should be trained to refer incoming citizen calls to the rumor control telephone number.	G.4.c			6/4/86	I
	This ARCA will be tested as an objective under Westchester and Rockland County at the next exercise.					
7.	On three occasions, information contained in EBS messages was inconsistent with information that is contained in the public information brochure. Information contained in EBS messages number 3, 7, and 9 directed residents of evacuated ERPAs to a different Westchester County reception center than those specified in the public information brochure.	E.7				
	• All information that is contained in EBS messages should be consistent with information in the emergency information brochure.				6/4/86	C
	• The plan, emergency information brochure, and EBS message should be reviewed and made consistent with respect to the specification of reception centers.				6/4/86	C

No.	AREA REQUIRING CORRECTIVE ACTION	NUREG-0654 FEMA-REP-1 Rev. 1, Reference[a]	FEMA Objective[b]	Exercise Date 3/22/88	Exercise Date Previous Exercises	Present Status[c]
1.	When the WEOC was informed that a sample had been taken for measurement of airborne radioiodine concentrations by the field monitoring team, they directed the team to remain at the sampling point. However, the sampling point was located within the plume, needlessly exposing team members so the field monitoring team relocated themselves to an area outside the plume boundary. Individuals responsible for decision making and the coordination of emergency activities require additional training in determining the plume EPZ in order to properly determine the location of field monitoring teams.	A.1.d, A.2.a	3	X		I
2.	The RACES operator was not aware of the maximum allowable dosages or who could authorize exposure above the established limits. Additional training should be given to those RACES operators who will likely accompany the field monitoring team in support of Westchester County's operations.	K.3.a, K.3.b	6	X		I
3.	The bus drivers for the general evacuation were not clear on the limits to exposure. Additional training should be given, and the limits to exposure could be indicated on the checklists or record cards for quick reference.	K.3,a, K.3.b	6	X		I
4.	Radio communications between the field team and the Westchester County EOC often were interrupted and inconsistent, apparently because of interference from other local government agencies using the same frequency. The plan or procedures, as appropriate (perhaps Attachment 14), should be revised to dedicate the radio frequency assigned to the field teams to their exclusive use during an exercise or an actual radiological emergency.	F	4	X	6/4/86	I
5.	The call lists that were used by personnel at the Westchester County Warning Point to notify the staff listed different names for some of the positions than the lists contained in Procedure 2. The entire set of call lists in the plan at the County Warning Point should be reviewed and corrected as necessary.	E,2		X	6/4/86	I

No.	AREA REQUIRING CORRECTIVE ACTION	NUREG-0654 FEMA-REP-1 Rev. 1, Reference[a]	FEMA Objective[b]	Exercise Date 3/22/88	Exercise Date Previous Exercises	Present Status[c]
6.	The second-shift coordinator had had no training and used a long-obsolete 1981 version of Radiological Emergency Response Procedure 4 (the school procedure). Sufficient numbers of backup school coordinators should be trained and supplied with current plans.	J.10.d			6/4/86	c[f]
7.	The status board in the communications room was not always kept up to date and was almost illegible. The person responsible for the communications room status board should be trained to keep it accurate and readable.	H.3			6/4/86	c
8.	The County Executive decided to delay the evacuation order for the areas surrounding the City of Peekskill so that the potential traffic conflicts would not develop, explaining his rationale to the State. In a more rapidly escalating incident than the one contained in this scenario, this decision could lead to an excessive evacuation time. The evacuation time estimates and transportation plans should be reviewed to determine whether other methods of evacuating the City of Peekskill during a rapidly escalating accident can be devised which avoid the necessity of delaying the evacuation of surrounding areas.	J.9 J.10.i J.10.i			6/4/86	c[j]
9.	The Deputy Commissioner of Public Safety objects to the presence in Procedure 2 of the traffic control system embodied in Table 2B (p. 2-21-2-32) of the Westchester County plan. He strongly prefers the system in Table 2A (which appears to have been omitted from the plan in a September 1984 revision [but which can still be found alongside Table 2B as part of Radiological Emergency Response Procedure 8 (p. 8-15-8-18)]. Two (2) competing traffic control systems should not be in the plan or procedures, and the responsible police officials should follow the system that has been selected. The plan should be rewritten with the close cooperation of the Deputy Commissioner of Public Safety to specify only one traffic control system in the Westchester County plan.	J.10.j			6/4/86	c[j]

No.	AREA REQUIRING CORRECTIVE ACTION	NUREG-0654 FEMA-REP-1 Rev. 1, Reference[a]	FEMA Objective[b]	Exercise Date 3/22/88	Exercise Date Previous Exercises	Present Status[c]
10.	Some information in EBS messages regarding Westchester County reception centers conflicted with what is contained in the brochures distributed to the public. The PIO staff at the EOC should be trained to insure that any information recommended for issuance in an EBS message is consistent with information provided in the public information brochure.	E.5 G.1 G.2			6/4/86	C[f]
11.	There was some confusion at the Joint News Center over whether an EBS message or a press release should be issued at 0934 in order to announce the evacuation of the Putnam schools; the decision was to issue EBS message #2. As a result, the County Executive restarted the EBS clock. The current version of the Westchester County plan calls for public notification of school evacuations to be via news releases, not EBS. Westchester County should determine whether EBS messages or news releases are the more appropriate procedures for public notification of school evacuations and should ensure that the county plan and actual practice are consistent.	G.4.b			6/4/86	C
12.	The EOC personnel had no knowledge that EBS message #6, which repeated certain protective action instructions to residents of Westchester County, had even been issued. This could have created confusion concerning the proper protective measures. County PIO personnel should be trained to coordinate all messages with Westchester County and to keep close track of all EBS messages as they are issued from the JNC.	G.4.b			6/4/86	C
13.	One of the field teams (HD 2) did not extend the probe out the window while traversing the scenario plume. Field team members should be trained to make sure that the probe is extended out the window of their vehicle while traversing the plume.	I.7 I.8			6/4/86	C

No.	AREA REQUIRING CORRECTIVE ACTION	NUREG-0654 FEMA-REP-1 Rev. 1, Reference[a]	FEMA Objective[b]	Exercise Date 3/22/88	Exercise Date Previous Exercises	Present Status[c]
14.	The message read by the police officer dispatched to perform route alerting in the area covered by siren #62 was not the message which is contained in the most recent version of the plan (attachment 13, p. 2-93), and it omitted the EBS call letters and frequency. A review should be made to assure that all emergency workers assigned to perform route alerting use the message contained in the current version of the plan.	E.6			6/4/86	C
15.	According to one of the bus dispatchers, some of the general population evacuation bus route maps are inaccurate. The accuracy of all maps of general population evacuation bus routes in Westchester County should be reviewed and the maps should be corrected as required.	O.1 O.5			6/4/86	C
16.	Not all of the entrances to the Westchester Community College campus in Valhalla were posted with directional signs that would lead evacuees to the proper entrance to the reception center. Signs should be posted at all entrances to the campus directing evacuees to the proper entrance to the reception center.	J.12			6/4/86	C
17.	Monitored and decontaminated vehicles were required to rejoin the incoming vehicle flow before turning aside to clean parking; no traffic officer was present to assist these movements. • Better procedures should be developed for routing of incoming vehicles so that unmonitored vehicles are kept separate from clean vehicles. • A traffic officer should be stationed to direct traffic to assure that the separation of unmonitored form clean vehicles is maintained.	J.12 L.1			6/4/86	C
18.	Some evacuee monitors had to be reminded to turn on their survey instruments; the evaluator's feet sometimes were remonitored after walking along the "contaminated" paths to the decontaminated areas, sometimes not. Continued training on details should be given in order to improve performance in evacuee monitoring.	J.12			6/4/86	C

No.	AREA REQUIRING CORRECTIVE ACTION	NUREG-0654 FEMA-REP-1 Rev. 1, Reference[a]	FEMA Objective[b]	Exercise Date 3/22/88	Exercise Date Previous Exercises	Present Status[c]
19.	Some RACES operators assigned to ride on evacuation buses and provide backup communications with the county EOC missed their bus apparently due to improper rendezvous information. Training should be provided to the dispatcher(s) of RACES personnel providing mobile communications with buses so they can be deployed to the field with correct information so that they can rendezvous with buses before then are dispatched from the garage.	F.1.d K.5.b			11/28/84, 6/4/86	C[f]
20.	Arrival of large numbers of evacuees at the reception center could create substantial backlogs, given the monitoring rates observed at the exercise. Five or six additional monitoring staff should be trained or the current staff should be trained in radiological monitoring procedures to increase the efficiency of preregistration monitoring.	J.12			3/3/82, 3/9/83, 11/28/84, 6/4/86	C
21.	The second shift field monitoring team members did not understand the reasons for the two (2) different DRDs they were given. The field monitoring teams should be trained about the functions of the different dosimetry they possess.	K.3.b 0.1 0.5			6/4/86	C
22.	The officer responsible for route alerting and one (1) of the traffic control point teams (evaluated at the intersection of routes 9 and 9A) were not sufficiently familiar with the specified procedures for reading and recording their doses, nor did they know the maximum permissible dose without authorization. The training of all Westchester County and Yorktown Police should be reviewed and proper training provided to those who have not been trained concerning radiological exposure control, or whose training has become stale.	K.3.a K.3.b 0.1 0.5			6/4/86	C
23.	One (1) of the general population bus drivers did not read the dosimeters at proper intervals. It is recommended that all general population bus drivers receive training on the proper use of all of the dosimeters.	K.3.b 0.1 0.5			11/28/84, 6/4/86	C[g]
24.	Bus and ambulance drivers who may be called upon to enter the 10-mile plume exposure pathway EPZ were not consistently trained in the use of dosimeters and KI. All emergency workers should be fully trained in radiological exposure control including the use of dosimeters and KI.	K.5.b			3/9/83	C

No.	AREA REQUIRING CORRECTIVE ACTION	NUREG-0654 FEMA-REP-1 Rev. 1, Reference[a]	FEMA Objective[b]	Exercise Date 3/22/88	Exercise Date Previous Exercises	Present Status[c]
25.	Contact with a number of residents in the area revealed that most do not remember receiving public information on how they would be notified or what their actions should be in case of an accident at IPNS.. However, most also were aware of the general concept of evacuating the area in case of such an accident, as well as the need to tune in their local radio station in order to receive emergency information. A more intensive effort should be conducted to inform local residents about the radiological emergency evacuation plan, such as an additional distribution of the public information brochures.	G.1 G.2			6/4/86	C[f]
26.	One of the schools visited had a tone alert radio which did not work during the exercise. Tone alert radios should be made operational at all locations.	F.1.a J.9			6/4/86	C
27.	Contact with a number of public facilities, including a hotel, bank, supermarket, electronics store, and fast food restaurant revealed a lack of public information materials, although the managers of these facilities were generally aware of the existence of an evacuation plan in case of an accident at IPNS. A more concerted effort should be undertaken at providing public awareness information to facilities which are used heavily by transient populations, such as additional distributions of public information brochures, stickers, etc.	G.2			3/9/83, 6/4/86	C[f]

TABLE 4.6.1 INDIAN POINT NUCLEAR POWER STATION —
SUMMARY OF AREAS REQUIRING CORRECTIVE ACTION
March 22, 1988
ROCKLAND COUNTY

No.	AREA REQUIRING CORRECTIVE ACTION	NUREG-0654 FEMA-REP-1 Rev. 1, Reference[a]	FEMA Objective[b]	Exercise Date 3/22/88	Exercise Date Previous Exercises	Present Status[c]
1.	Personnel performing radiological monitoring of evacuees at the reception center were not aware of the possible concentration of iodine isotopes in the thyroid and did not perform this monitoring properly. Training should be provided and revisions made to their procedures to include this step in the monitoring of evacuees.	J.12	21	X		I
2.	The only communication system available at the reception center consisted of one pay telephone. This arrangement is inadequate given the nature of the reception operations. Several phone lines should be available for use by the emergency workers. A radio backup which could communicate with the county EOC, hospital/ambulance net, and bus dispatcher, would also improve capabilities.	F	4	X		I
3.	Bus drivers of general population routes were not aware of several items which could affect exposure themselves or the passengers: • Information on the areas along the evacuation routes which may be affected by a release were not transmitted to the driver by the dispatcher. • Reading of dosimetry every 15 minutes. • Importance of keeping bus windows closed if radiation were encountered during a run. Bus drivers and dispatcher should receive training in ways of reducing potential exposure from a release.	K.3.b	6	X		I
4.	The principal of the Congers Elementary School was not aware of any emergency planning provisions at the school. The locations of relocation centers, evacuation procedures, evacuation time estimates and a general knowledge of emergency preparedness were not known or available. If emergency procedures are not available, they should be prepared and the officials of the Congers Elementary School should receive appropriate training in emergency preparedness.	J.9, J.10.g	19	X		I

TABLE 4.6.1 (Cont'd)

No.	AREA REQUIRING CORRECTIVE ACTION	NUREC-0654 FEMA-REP-1 Rev. 1, Reference[a]	FEMA Objective[b]	Exercise Date 3/22/88	Exercise Date Previous Exercises	Present Status[c]
5.	Upon his arrival at the County Warning Point, the Deputy Director, Office of Emergency Services, directed the County Warning Point to notify the County Executive, Radiological Health Specialist, and Public Information Officer. While these notifications were in accordance with the Communications Section Procedure Manual which was used during the exercise, they differ from the Rockland County plan (Procedure RCS-4, pages 3 and 4 of 6). Procedure RCS-4 states that during an Unusual Event ECL, the Director OES, County Executive and Palisades Park Police are to be notified during an Alert or higher ECL. In addition, both sets of procedures state that the Palisades Park Police are to be notified during an Unusual Event; they were not, however, notified until 0833, after declaration of the Alert ECL.	E.2				
	• The Rockland County Warning Point notification procedures RCS-4 should be reviewed and revised if appropriate.				6/4/86	C
	• The Palisades Park Police should be notified at the Unusual Event ECL in accordance with the procedures.				6/4/86	C
6.	The Rockland County EOC staff requested plant status information via hard copy (i.e., Part III of the New York State Radiological Emergency Data Form) as called for in the Rockland County Plan. The utility informed Rockland County that this information would have to be obtained by telephone due to a backlog on the telefax equipment. Rockland County should obtain a firm commitment from the utility that hard copy of plant status data will be sent to the Rockland County EOC on a timely basis.	F.1.d F.1			6/4/86	C
7.	The event status board in the operations room was not always updated in a timely manner. Operations room personnel should be trained to maintain and update the status board until the termination of an emergency and deactivation of the EOC is complete.	H.3 F.1			4/10/85, 6/4/86	C

No.	AREA REQUIRING CORRECTIVE ACTION	NUREG-0654 FEMA-REP-1 Rev. 1, Reference[a]	FEMA Objective[b]	Exercise Date 3/22/88	Exercise Date Previous Exercises	Present Status[c]
8.	In several instances, information on the events status board in the operations room was inaccurate.	H.3				
	• Operations room personnel should be trained to ensure that complete and accurate information is posted on the status board.				4/10/85, 6/4/86	C
	• New or updated information should be posted on the status board as a separate entry, rather than as a modification to an existing entry.				4/10/85, 6/4/86	C
9.	The formal school evacuation time estimates have not been submitted to the Federal Emergency Management Agency (FEMA) for review. The formal school evacuation time estimates should be submitted to FEMA for review.	J.10.1			11/28/84, 6/4/86	C
10.	There were seven (7) individuals trained in personnel and vehicle monitoring at the reception center, but no back-ups were available for these individuals. Additional staff should be trained to fill second shift positions for personnel and vehicle monitoring and for nursing functions at the reception center.	A.4			6/4/86	C
11.	Staff that would be responsible for decontamination of vehicles were poorly trained. Staff that would be responsible for decontamination should be properly trained.	K.5.b			6/4/86	C
12.	Decontamination procedures were not carefully thought out and no written instructions were available. Plans for vehicle washdown and impoundment were vague and the location selected made the proper impoundment of wash water and vehicles difficult. Suitable plans for vehicle contamination should be developed for the reception center location.	K.5.b			6/4/86	C
13.	The directions to the congregate care center provided to evacuees at the reception center were incorrect. Directions to the congregate care center that are to be provided to evacuees at the reception center should be revised. These directions should be more specific and should note the expected mileage.	J.9 J.10.g			6/4/86	C
14.	The maps provided to Peter Brega, Inc. bus company had several errors on them and required the driver to go to two (2) reception centers. Bus route maps should be reviewed and revised as necessary.	J.10.g			6/4/86	C

TABLE 4.6.1 (Cont'd)

No.	AREA REQUIRING CORRECTIVE ACTION	NUREG-0654 FEMA-REP-1 Rev. 1, Reference[a]	FEMA Objective[b]	Exercise Date 3/22/88	Exercise Date Previous Exercises	Present Status[c]
15.	There were no maps available at the Haverstraw Transit Company to direct drivers from their assigned schools to the reception center. Maps should be provided to each driver showing the desired route to the reception center from the assigned school.	J.10.1,g			6/4/86	C
16.	The owner of the Peter Brega, Inc. bus company expressed concern that they had no letter of agreement with Rockland County to provide emergency bus services in the event of a radiological emergency. However, after the exercise, Rockland County representatives provided a copy of the letter of agreement with this bus company to FEMA. Rockland County should verify its agreement with Peter Brega, Inc.	A.3			6/4/86	C
17.	Some problems were experienced in maintaining mobile radio communications with buses due to distance from the base station, topography, electrical interference, etc. The alternate method of communication for both non-radio equipped and radio-equipped vehicles which experienced operational problems was effectively demonstrated by telephone. Communications needs for transportation companies are under review as part of the Rockland County evacuation study effort that is currently being performed by the transportation Study Planning Group (TSPG). Therefore, the communication needs for each Rockland County transportation company with an emergency response mission remains unresolved until the TSPG study is completed. The study should give specific recommendations regarding these communication needs. The completion date for this study should be provided to FEMA.	F.1.d			11/28/84, 6/4/86	C
18.	Bus drivers were not familiar with the specific location of the reception center where they were to take school evacuees. Maps should be developed showing the location(s) of reception centers to which schools are assigned. These maps should be maintained at the bus garages for distribution to drivers in the event a school evacuation becomes necessary.	J.10.a			11/28/84, 6/4/86	C
19.	Two bus evacuation routes were modified by drivers on the day of the exercise to avoid railroad crossings which potentially could cause delays. The bus evacuation route maps should be reviewed and revised with input from the drivers to ensure that the most efficient routing is used.	J.10.a			11/28/84, 6/4/86	C

No.	AREA REQUIRING CORRECTIVE ACTION	NUREG-0654 FEMA-REP-1 Rev. 1, Reference[a]	FEMA Objective[b]	Exercise Date 3/22/88	Exercise Date Previous Exercises	Present Status[c]
20.	The transportation company for demonstrating the simulated evacuation of noninstitutionalized mobility-impaired persons is open only twelve (12) hours per day Monday through Friday and eight (8) hours on Saturday. The procedures for notifying all companies with responsibilities for transporting noninstitutionalized mobility-impaired individuals should be reviewed, and revised if required, to ensure that these companies can be notified and resources mobilized on a 24-hour basis.	J.10.d			11/28/84	C[j]
21.	The bus dispatcher for Haverstraw Transit Company stated that only six (6) of the 95 drivers expected had received training in using dosimetry. All bus drivers who may be called upon in an emergency should be trained in the use of dosimetry.	K.3.b			6/4/86	C[f]
22.	The Stony Point Police officer did not have a low-range dosimeter. Appropriate low-range personnel dosimetry should be provided to personnel who staff all traffic control points.	K.3.a			6/4/86	C
23.	The dosimetry provided to the Rockland Sheriff Deputy had not been removed from its package and had not been changed. Dosimetry provided to officers should be ready for use when issued.	K.3.b			6/4/86	C
24.	The Rockland County Sheriff and Haverstraw Police Department units were generally unaware of proper dosimeter use and exposure limits. Training on dosimetry use should be provided to all police units that may be called upon to staff TCPS. This training should emphasize using the equipment and preparing it for use in the field.	K.3.b			6/4/86	C
25.	Rockland County Sheriffs and Haverstraw Police officers were unaware of when to use KI and who authorizes its use. Training on procedures should be provided to all police officers to insure their proper use of KI.	J.10.e			3/9/83, 11/28//84, 6/4/86	C

No.	AREA REQUIRING CORRECTIVE ACTION	NUREG-0654 FEMA-REP-1 Rev. 1, Reference[a]	FEMA Objective[b]	Exercise Date 3/22/88	Exercise Date Previous Exercises	Present Status[c]
26.	The bus dispatcher at one transportation company had difficulty using the dosimeter charger to zero dosimeters before issuing them to driver(s) and was concerned that some of the dosimeters would not stay zeroed. Also, one bus driver and one police unit that staffed a traffic control point did not understand what readings on their dosimeter would mean. All emergency workers should be fully trained in radiological exposure control including the use of dosimeters.	K.3.a			3/9/83, 11/28/84, 6/4/86	C
27.	Bus drivers and police units staffing traffic control points did not understand that they would notify their supervisor when their dosimeter reached 1R and that permission to exceed a cumulative dose of 3R would require permission from their supervisor as authorized by the County Department of Health as set forth in the Rockland County Plan. Additional training is needed in the procedure emergency workers are to follow in requesting authorization to exceed Protective Action Guidelines.	K.4			11/28/84, 6/4/86	C
28.	Haverstraw Transit Company had only nine (9) 0-5R DRDs, 24 low-range (0-200mR) DRDs, and 24 TLDs although 95 drivers were potentially to be called in an emergency. A sufficient number of appropriate dosimeters should be provided to Haverstraw Transit Company so that all drivers who may potentially be called in an emergency will be equipped with proper monitoring and exposure control.	K.3.a			3/3/82, 3/9/83, 6/4/86	C[f]
29.	Of the limited number of residents of the 10-mile EPZ questioned by federal observers, only about half could recall having received the public information brochure, understood its contents, or were aware of the meaning of the sirens. Additional public education is needed so that the public will understand the locations of the areas that are to take protective actions, will know how to carry out the protective actions, and will be aware of what the sirens mean.	G.1 J.10.a			3/3/82, 3/9/83, 11/28/84, 6/4/86	C[g]

No.	AREA REQUIRING CORRECTIVE ACTION	NUREG-0654 FEMA-REP-1 Rev. 1, Reference[a]	FEMA Objective[b]	Exercise Date 3/22/88	Exercise Date Previous Exercises	Present Status[c]
30.	Of five (5) motels visited, two (2) had the emergency information brochure available for the transient population. Sufficient copies of the current emergency information brochure should be provided to all hotels and motels in the county. The need to keep the brochures available for distribution to hotel/motel residents in an actual emergency should be stressed to the managers of these facilities.	G.2			3/9/83, 6/4/86	C[g]

TABLE 4.7.1 INDIAN POINT NUCLEAR POWER STATION —
SUMMARY OF AREAS REQUIRING CORRECTIVE ACTION
March 22, 1988
ORANGE COUNTY

No.	AREA REQUIRING CORRECTIVE ACTION	NUREG-0654 FEMA-REP-1 Rev. 1, Reference[a]	FEMA Objective[b]	Exercise Date 3/22/88	Exercise Date Previous Exercises	Present Status[c]
1.	The Orange county representatives did not demonstrate around-the-clock capability either by double staffing or by presentation of a roster. The two counties should demonstrate how they would maintain around-the-clock staffing either by presenting a roster or by double staffing at the next exercise.	A.2.a		X		I
2.	Orange County and Rockland County share ERPAs 39 and 40. The counties reached an accord that the Rockland County Executive, or designee, will make protective action decisions for the entire area in these ERPAs. In view of this accord, EBS messages advising evacuation of ERPAs 39 and 40 created the opportunity for confusion as to whether Orange County residents in these ERPAs should evacuate. The EBS messages stated that Rockland County residents in these ERPAs are advised to evacuate by the Deputy Rockland County Executive and were either silent as to Orange County or stated that Orange County residents were not required to take any action. The Orange County PIOs should be trained to ensure that EBS messages concerning ERPAs 39 and 40 that advise Rockland County residents should also advise Orange County residents. In addition, because Orange County residents relate to advise of Orange County emergency officials, these messages should also state that Orange County emergency officials concur with the advice of the Rockland County officials.	E.7	13	X		I
3.	Emergency workers at the traffic control points were not aware of the proper dose limits at which authorization is required nor were they familiar with the frequency at which to read and record their dosimeters. Training should be provided for law enforcement personnel who will be staffing the TCP. Also, it would be helpful if the exposure limits were printed on the field log sheets for quick reference by emergency personnel.	K.3.b K.4	6		3/9/83, 6/4/86	I
4.	The Orange county EOC sign-in procedures did not provide for the recording of arrival or departure times of the emergency staff. The Orange County EOC sign-in sheet should be revised to include arrival and departure times for staff members.	A.4 H.4			6/4/86	C

No.	AREA REQUIRING CORRECTIVE ACTION	NUREG-0654 FEMA-REP-1 Rev. 1, Reference[a]	FEMA Objective[b]	Exercise Date 3/22/88	Exercise Date Previous Exercises	Present Status[c]
5.	The telefax machine used to provide hard copy transmissions with the Joint News Center experienced some operational problems which caused minor delays in message transmission. The problem with the telefax system should be identified and corrected.	K.10			6/4/86	C
6.	Dose projections or calculations based on the use of data gathered by the radiological monitoring field team were not made. The use of field team data to calculate doses to the public should be demonstrated at a future exercise.	I.10			6/4/86	C
7.	ERPA 39 is jointly shared by both Rockland and Orange Counties. Confusion occurred with Orange County recommended sheltering in ERPA 39 and Rockland County ordered an evacuation.	J.9				
	• The boundary of ERPA 39 should be modified so that this ERPA is exclusively in either Rockland County or in Orange County, thereby giving full jurisdiction to one county.				6/4/86	I
	• In the meantime, additional coordination between counties concerning ERPA 39 should be implemented.				6/4/86	I
8.	The nature of the handicap for the noninstitutionalized mobility impaired was not known by the bus driver. Information pertaining to the handicaps of noninstitutionalized mobility impaired persons should be made available to the drivers responsible for these routes.	J.10.d			6/4/86	C
9.	The capability for 24-hour staffing at the Orange County reception/congregate care center was not demonstrated through the presentation of a roster. It appeared that there was not enough trained personnel available to sustain 24-hour operation. Twenty-four hour staffing capability should be demonstrated at the Orange County reception/congregate care center during the next exercise.	J.12			6/4/86	C
10.	Provisions for care of the handicapped at the reception center are inadequate. Provisions for care of the handicapped should be considered at the reception centers.	J.10.d			3/3/82, 3/9/83, 11/28/84, 6/4/86	C

No.	AREA REQUIRING CORRECTIVE ACTION	NUREG-0654 FEMA-REP-1 Rev. 1, Reference[a]	FEMA Objective[b]	Exercise Date 3/22/88	Exercise Date Previous Exercises	Present Status[c]
11.	All members of the field monitoring team did not have the required dosimetry equipment. The available dosimetry equipment was not read on a regular basis. • All members of the field monitoring team (including the RACES operator) should have high and low direct reading dosimeters and TLDs. • More training is required to assure that dosimetry is read on a regular basis.	K.3.a K.3.b			6/4/86	C
12.	Radiological field monitoring team members were not aware of the maximum allowable dose without authorization nor were they aware of how to obtain that information. Team members should receive training in the limits on accumulated doses at which administrative actions are required.	K.5.a			6/4/86	C
13.	Emergency personnel at the PMC and the reception center were not provided with the required dosimetry equipment. Appropriate dosimetry equipment should be provided to emergency workers at the PMC and reception center.	K.3.a			6/4/86	C[h]
14.	Some emergency workers at the traffic control points were not provided with KI. Law enforcement officers should have the required KI given to them upon dispatch.	J.10.e			11/28/84, 6/4/86	C
15.	According to a representative from a bus company which is responsible for evacuation, only 10% of that company's drivers have received training in radiological exposure control measures. Should more drivers be needed in an actual emergency, exposure control could not be effectively managed. All emergency response personnel should be fully trained in radiological exposure control procedures. A training schedule and the number of individuals trained should be provided to FEMA.	K.3.b			11/28/84, 6/4/86	C
16.	The ambulance team responding to the medical drill was not aware of who could authorize exposure in excess of PAGs. Additional training should be provided ambulance personnel on exposure limits and authorization to exceed them.	K.4			11/28/84	C
17.	The Provost Marshall of the U.S. Military Academy at West Point stated that tone alert radios are present at the Academy, but that proper operation was unknown by the staff. Training should be offered to the Military Academy concerning tone alert radio operation and radiological emergency response procedures.	F.1.e J.9			6/4/86	C

No.	AREA REQUIRING CORRECTIVE ACTION	NUREG-0654 FEMA-REP-1 Rev. 1, Reference[a]	FEMA Objective[b]	Exercise Date 3/22/88	Exercise Date Previous Exercises	Present Status[c]
18.	The Hotel Thayer in West Point, New York did not have emergency information posted nor available as required. Required emergency information should be provided to all applicable locations within the 10-mile EPZ in Orange County.	J.10.c			6/4/86	C
19.	Too many activities demonstrated at the remedial medical drill were simulated. The following activities should be demonstrated at the next exercise: (1) use of two (2) monitors, one (1) for the ambulance crew and one (1) for the victim, (2) a separate recorder to note radiation readings and vital signs, (3) a full demonstration of proper exit procedures for at least one staff member, and (4) greater participation by the physician.	L.4			6/4/86	C

TABLE 4.8.1 INDIAN POINT NUCLEAR POWER STATION --
SUMMARY OF AREAS REQUIRING CORRECTIVE ACTION
March 22, 1988
PUTNAM COUNTY

No.	AREA REQUIRING CORRECTIVE ACTION	NUREG-0654 FEMA-REP-1 Rev. 1, Reference[a]	FEMA Objective[b]	Exercise Date 3/22/88	Exercise Date Previous Exercises	Present Status[c]
1.	The County Executive did not verify the contents of the decided upon protective action for Putnam County in EBS message #5 before broadcast of the message. The procedure in the plan should be followed.	E.5, G.3.b	13	X		I
2.	The general population bus driver missed two stops on the bus route. The first was missed because a number was missing on a mail box (#134) and the second was missed because an intersection was not marked. Though the driver was aware of the missed stops, additional training is necessary regarding the location of stops along each bus route. Road markings need to be readily visible for all bus stops.	J.10.g	18	X		I
3.	A shift change was not demonstrated in the accident assessment area. There were two accident assessment team leaders present for training purposes and both wished to participate in the entire exercise. An actual shift change area should be demonstrated among the lead positions in the accident assessment area during the next exercise.	A.4			6/4/86	C
4.	Radio communications with the county's mobile medical vehicle were intermittent as observed both in the Putnam County EOC and in the field. The cause of the intermittent radio communications with the mobile medical vehicle should be determined and corrected.	F.2			6/4/86	C
5.	No information was placed on the status board in the radio communications area until after 1000 while the first entry had been placed on the status board in the operations area before 0854. In addition, an entry noting that a Site Area Emergency had been declared was not posted on the status board in the operations area until after 1042 even though the notification had been received at the Putnam County EOC over the RECS line at about 1019. Personnel responsible for maintaining the status boards should receive additional training on the necessity of placing important information on both status boards in a timely manner.	F			6/4/86	C
6.	No status board of key events was available in the accident assessment area. Key events status boards should be supplied in the accident area and personnel responsible for maintaining status boards should be trained to maintain the additional status board in accident assessment.	H.3	5		6/4/86	C

TABLE 4.8.1 (Cont'd)

No.	AREA REQUIRING CORRECTIVE ACTION	NUREG-0654 FEMA-REP-1 Rev. 1, Reference[a]	FEMA Objective[b]	Exercise Date 3/22/88	Exercise Date Previous Exercises	Present Status[c]
7.	Some confusion resulted at the Putnam County EOC when information about rerouting traffic around an impediment to evacuation was not included in the EBS message that was issued at about 1421. Putnam County should consult with the other three (3) counties and the State and reach agreement on guidelines for the inclusion of material in EBS messages and on where decisions are made on the content of EBS messages.	E			6/4/86	C
8.	Except for the county sheriff's first responders and barricades, the dispatch of all equipment and personnel required for dealing with impediments was simulated; the exercise scenario required that actual equipment be dispatched. Putnam County should dispatch actual equipment and personnel to the scene of impediments for evacuation during the next exercise.	M.1.b			6/4/86	C
9.	The accident assessment staff were unsure as to whether the Putnam County Health Department or the accident assessment group had the authority to authorize field monitoring teams to ingest KI. The accident assessment staff should be trained to understand the KI policy, and in particular who has authority to recommend the ingestion of KI and the one-over-one chain of command by which that decision is communicated to field monitoring teams.	K.4			6/4/86	C
10.	The lead PIO at the Putnam County EOC did not demonstrate a shift change. There was a rotation in one of the PIO positions, but the person rotated into this position had been present in the EOC during most of the exercise. An actual shift change should be demonstrated for the lead PIO position during the next exercise and personnel who have not been present in the EOC should be used as the incoming shift.	A.4			6/4/86	C
11.	The bus driver on general population evacuation route #96 had only a minimal knowledge of the specific route and did not know the location of the reception center. Bus drivers assigned to general population evacuation routes should receive additional training to familiarize them with the routes they are to drive, the pickup points on the routes, and the location of the reception center.	O.1			3/9/83, 11/28/84, 6/4/86	C

TABLE 4.8.1 (Cont'd)

No.	AREA REQUIRING CORRECTIVE ACTION	NUREG-0654 FEMA-REP-1 Rev. 1, Reference[a]	FEMA Objective[b]	Exercise Date 3/22/88	Exercise Date Previous Exercises	Present Status[c]
12.	The route selection for general population evacuation bus route #96 was questionable; the route included narrow, unpaved roads which could be difficult to negotiate in adverse weather or traffic conditions. The route selection from route #96 to the reception center might be improved, as the current route is indirect, adding to the transit time. The driver on route #96 suggested improvements to the route. The bus routes for the evacuation of the general population in Putnam County should be reviewed and revised if possible to avoid roads of poor quality and to provide direct routes to the reception centers unless other considerations dictate retention of the current routes. The input of drivers for alternatives to the existing routes could prove beneficial.	J.10.k			6/4/86	C
13.	The driver of the pickup vehicle was not aware that noninstitutionalized mobility-impaired individuals were to be taken to the reception center. Individuals responsible for transporting the noninstitutionalized mobility-impaired should be trained in the procedures required by the plan, particularly the requirement that they be transported to the reception center after pickup.	O.1			6/4/86	C
14.	The bus on general population evacuation route #93 was delayed about thirty (30) minutes in reaching its first pick-up point because the map being used by the driver was unclear causing the driver to turn off the route onto an unmarked road. On route #96, there were errors in the route instructions and the maps were of poor quality, causing confusion on the part of the driver. Three (3) of the seven (7) pickup points were unmarked, minor crossroads, making identification difficult. Instructions given to bus drivers on general population evacuation routes should be corrected and the clarity of the maps routes should be improved by marking the turning angles at intersections more clearly and providing for the unambiguous identification of pickup points.	J.10.a			3/9/83, 11/28/84, 6/4/86	C
15.	There were six (6) radios for communicating between buses and the bus garage for the evacuation of the general population. However, only five (5) of these radios were working and the Haldane School District is responsible for nine (9) general population evacuation routes. Each bus used for evacuation of the general population should be equipped with a two-way radio.	J.10.g			3/9/83, 11/28/84, 6/4/84	C

No.	AREA REQUIRING CORRECTIVE ACTION	NUREG-0654 FEMA-REP-1 Rev. 1, Reference[a]	FEMA Objective[b]	Exercise Date 3/22/88	Exercise Date Previous Exercises	Present Status[c]
16.	Members of the radiological field monitoring team did not know that the county plan requires members of the team to report to their team supervisor at a dose reading of 0.1 R (100 mR). The lowest DRD officially carried by field monitoring team members (0-5 R) would not allow accurate determination of this dose, since the scale increments are 200 mR.	K				
	• Members of the radiological field monitoring teams should be trained in the requirement to report to their team supervisor at a dose of 100 mR.				6/4/86	C
	• The Putnam County plan should be revised to require field monitoring teams to carry 0-200 mR DRDs for the purpose of determining when a dose level of 100 mR has been reached.				6/4/86	C
17.	The Putnam County plan is unclear as to whether members of the field monitoring teams must notify their supervisors when a dose of 1 R has been received. A report to the shift supervisor is required of emergency personnel by point 2 of Attachment 11 to Procedure 4 which also specifically mentions the 3 R action level. However, Section 3.2 of Attachment 13 giving instruction for the radiation field monitoring teams mentions only the 100 mR and 3 R action level. The Putnam County plan should be classified by either specifically including or specifically excluding the 1 R action level in Attachment 13 to Procedure 4.	K			6/4/86	C
18.	Emergency workers assigned to the evacuation of the noninstitutionalized mobility-impaired were not familiar with dosimetry and dosimetry procedures. Emergency workers assigned to the evacuation of the noninstitutionalized mobility-impaired should receive additional training in the requirements of the county plan for the use of dosimetry and the associated action levels.	O.1			6/4/86	C
19.	The county highway worker at TCP 4B at the intersection of Peekskill Hollow Road and Bryant Pond Road was not familiar with the authorization procedure for taking KI. Additional training in the authorization procedure for KI should be given to county highway workers who might be called upon to assist at TCPs.	O.1			6/4/86	C
20.	The emergency workers assigned to the evacuation of the noninstitutionalized mobility-impaired were not familiar with the authorization procedure for taking KI. Additional training in the authorization procedure for KI should be given to emergency workers assigned to the evacuation of the noninstitu-	O.1			6/4/86	C

TABLE 4.8.1 (Cont'd)

No.	AREA REQUIRING CORRECTIVE ACTION	NUREG-0654 FEMA-REP-1 Rev. 1, Reference[a]	FEMA Objective[b]	Exercise Date 3/22/88	Exercise Date Previous Exercises	Present Status[c]
21.	The bus driver on general population evacuation route #93 did not check the dosimeter at the 15-30 minute intervals specified in the county plan. The driver read his dosimeter only three (3) times (once at the beginning, once at the first pickup point, and once at the end of the trip) during a trip of about two (2) hours and twelve (12) minutes. This driver used only the 0-200 mR dosimeter, did not know the dose authorization limit, and was unaware of the requirement to report to the PMC at the conclusion of the route. Bus drivers assigned to general population evacuation routes should receive additional training in the proper use of personal dosimetry, and the emergency worker radiological exposure control procedures specified in the county plan.	O.1			11/28/84, 6/4/86	C
22.	The county highway worker at TCP 4B at the intersection of Peekskill Hollow Road and Bryant Pond Road was not familiar with dosimetry and dosimetry procedures. He was unsure of the dose authorization limits and the procedures to follow if the dose exceeded the authorization limits. He was not familiar with the purpose for dosimeters, procedures for reading the	O.1			11/28/84, 6/4/86	C
23.	No information had been provided to parents of guardians of students of either the Noah's Ark Nursery School or the Putnam Valley Junior High School regarding emergency response procedures related to Indian Point. Parents or guardians of students in public, nonpublic, and nursery schools should be made aware of the procedures to be followed in the event of a radiological emergency at Indian Point.	G.2			6/4/86	C[i]
24.	The principal of the Putnam Valley Junior High School indicated that eight (8) buses would be required for evacuation. Based on Table 1, Attachment 1 to Procedure 5, Schools, of the Putnam County plan, only seven (7) buses have been allocated to the Putnam valley Junior High School. The allocation of bus resources to schools in Putnam County should be reviewed to ensure that the supply of buses is adequate to meet the demand in the event of a full evacuation.	J.10.g			6/4/86	C[j]

TABLE 4.8.1 (Cont'd)

No.	AREA REQUIRING CORRECTIVE ACTION	NUREG-0654 FEMA-REP-1 Rev. 1, Reference[a]	FEMA Objective[b]	Exercise Date 3/22/88	Exercise Date Previous Exercises	Present Status[c]
25.	The teacher interviewed at Noah's Ark Nursery School indicated that, in the event of an evacuation, the director would be responsible for implementing a telephone fanout procedure which would result in students being picked up by private automobiles. The Putnam County plan indicates that students in nursery schools are to be bused to reception centers in Dutchess County, and one (1) bus has been allocated to the Noah's Ark Nursery School. Teachers in nursery schools in Putnam County should be made aware that buses are to be made available to evacuate children in the event of a radiological emergency and that this procedure may differ from the normal early dismissal procedure requiring pickup of students by private automobiles.	J.10.g O.1			6/4/86	C[i]
26.	The assistant director at the Walter Hoving Home indicated that if the tone alert sounded, the situation would be verified and the procedures in the public information brochure would be followed. He also said that he was not sure what he would do if the sirens sounded without the tone alert sounding. The public information brochure for Putnam County does not mention the Walter Hoving Home and the county plan classifies Walter Hoving as a special medical facility for which evacuation vehicles will be provided. Additional efforts should be undertaken in Putnam County to ensure that all personnel with responsibilities for the direction of special medical facilities are aware of the planned procedures for their facilities to follow in the event of radiological emergency at Indian Point.	J.10.d			6/4/86	C[i]
27.	The secretary at Garrison Union Free School had not seen a copy of the public information brochure. Additional educational efforts should be undertaken in Putnam County to acquaint all responsible personnel at schools and special facilities with the existence and content of the public information brochure.	G.2			6/4/86	C[i]
28.	Intense efforts should be made to make the public aware of the meaning of the siren signals.	G.2			3/3/82, 6/4/86	C[i]

TABLE 4.8.1 (Cont'd)

No.	AREA REQUIRING CORRECTIVE ACTION	NUREG-0654 FEMA-REP-1 Rev. 1, Reference[a]	FEMA Objective[b]	Exercise Date 3/22/88	Exercise Date Previous Exercises	Present Status[c]
29.	The ambulance crew communicated the wrong contamination units to the Putnam Hospital Center, reporting 3000 Rem rather than 3000 cpm. The mistake could have been avoided had the simulated reading the associated units been recorded immediately after receipt of the information from the evaluator. Additional training emphasizing the immediate recording of meter readings and the units in which the reading are made should be given to ambulance personnel.	O.4.h			3/3/82, 6/4/86	C[i]
30.	The nurse/recorder at the Putnam Hospital Center did not record the patient's contamination level initially and after each decontamination procedure. Additional training in the necessity of keeping records of the contamination levels should be given to individuals responsible for keeping records during the decontamination procedure.	O.4.h			6/4/86	C[i]

TABLE 4.9.1 INDIAN POINT NUCLEAR POWER STATION --
SUMMARY OF AREAS REQUIRING CORRECTIVE ACTION
March 22, 1988
DUTCHESS COUNTY

No.	AREA REQUIRING CORRECTIVE ACTION	NUREG-0654 FEMA-REP-1 Rev. 1, Reference[a]	FEMA Objective[b]	Exercise Date 3/22/88	Exercise Date Previous Exercises	Present Status[c]
1.	A shift change was not demonstrated for the Red Cross personnel operating the congregate care center. A shift change should be demonstrated by the Red Cross personnel operating the congregate care center and evaluated at the next exercise.	A.4	34		6/4/86	C
2.	Information on the designated reception center for evacuated schoolchildren was available at the EOC but this information was not passed onto the reception center.	J.12	21			
	• Social service staff should be kept informed as to where children from evacuated schools are being taken.				6/4/86	C
	• Information on the reception centers being used for specific schools should be promptly transmitted from the EOC to the appropriate reception centers.				6/4/86	C

TABLE 4.10.1 INDIAN POINT NUCLEAR POWER STATION —
SUMMARY OF AREAS REQUIRING CORRECTIVE ACTION
March 22, 1988
BERGEN COUNTY, NEW JERSEY

No.	AREA REQUIRING CORRECTIVE ACTION	NUREG-0654 FEMA-REP-1 Rev. 1, Reference[a]	FEMA Objective[b]	Exercise Date 3/22/88	Exercise Date Previous Exercises	Present Status[c]
1.	Some staff were prepositioned at the Bergen County EOC. Therefore, the efficiency of the staffing procedures could not be evaluated for all staff positions. Increased staffing in response to the escalating emergency could not be systematically demonstrated because of poor information flow from the Rockland County. The ability to promptly activate staff following notification of an Alert ECL and to increase staff needs in response to escalating emergency conditions should be demonstrated at the Bergen County EOC during the next exercise.	A.4			6/4/86	C
2.	A status board, a plume EPZ map, and maps showing the locations of evacuation routes, reception centers, and congregate care centers were not posted in the Bergen County EOC. These displays would improve the emergency management planning for all county departments. • A status board, plume EPZ map and maps designating the locations of evacuation routes, reception centers, and congregate care facilities should be posted in the Bergen County EOC. • The status board should be updated regularly.	J.12			6/4/86	C
3.	Due to inadequate information flow to the Bergen County EOC, traffic control activities were not demonstrated at the congregate care center. Traffic control at the congregate care center should be demonstrated at the next exercise.	J.12			6/4/86	C

TABLE 4.11.1 INDIAN POINT NUCLEAR POWER STATION —
SUMMARY OF AREAS REQUIRING CORRECTIVE ACTION
March 15, 1988 (Westchester)
December 9, 1987 (Putnam)
MEDICAL DRILLS FOR WESTCHESTER AND PUTNAM COUNTIES

No.	AREA REQUIRING CORRECTIVE ACTION	NUREG-0654 FEMA-REP-1 Rev. 1, Reference[a]	FEMA Objective[b]	Drill Date	Present Status[c]
Westchester County					
1.	The sheet used under the patient during medical treatment caught and absorbed the saline solution used for decontamination. Unless changed frequently this could contribute to possible recontamination of the patient and also give misleading and erroneous radiological readings. The emergency room staff should receive training in the proper use of bedding materials in order to limit the spread of contamination.	K.5.b	25	3/15/88	I
2.	The units of contamination transmitted to the hospital were incorrect; counts per minute were reported instead of mR/hr. Ambulance personnel should receive additional training in recording and reporting radiological information.	L.1	25	3/15/88	I
Putnam County					
1.	Techniques demonstrated by the ambulance crew for the handling of the patient and the equipment used during treatment, would have contaminated them. The ambulance crew should receive additional training in procedures to limit the spread of contamination.	K.5.b	25	12/9/87	I

TABLE 4.12.1 INDIAN POINT NUCLEAR POWER STATION —
SUMMARY OF AREAS REQUIRING CORRECTIVE ACTION
November 23, 1987 (Orange)
MEDICAL DRILLS FOR ROCKLAND AND ORANGE COUNTIES

No.	AREA REQUIRING CORRECTIVE ACTION	NUREG-0654 FEMA-REP-1 Rev. 1, Reference[a]	FEMA Objective[b]	Exercise Date 3/22/88	Exercise Date Previous Exercises	Present Status[c]
	No Recommendations					

[a]NUREG-0654, FEMA, REP-1, Rev. 1, Criteria for Preparation and Evaluation of Radiological Emergency Response Plans and Preparedness in Support of Nuclear Power Plants, Part II.

[b]Objective number is from GM-EX3 (dated February 26, 1988).

[c]C: Remedial action complete.
I: Remedial action incomplete.

[d]Corrected during March 29, 1988 remedial drill.

[e]This previously identified performance ARCA has been reclassified as a planning issue.

[f]This performance ARCA has been corrected as a result of the January 29, 1988 annual letter of certification.

[g]ARCA (Westchester G2) from INPS PEA dated September 16, 1987 rewritten to reflect the current status.

[h]Corrected in PEA dated June 23, 1987.

[i]This performance ARCA has been corrected as a result of the February 5, 1988 annual letter of certification.

[j]This performance ARCA has been corrected as a result of a change to the plan.