Nuclear Operating Company

South Texas Project Electric Generating Station 4000 Avenue F – Suite A Bay City, Texas 77414

January 14, 2010
U7-C-STP-NRC-100018

U. S. Nuclear Regulatory Commission
Attention: Document Control Desk
One White Flint North
11555 Rockville Pike
Rockville MD 20852-2738

South Texas Project
Units 3 and 4
Docket Nos. 52-012 and 52-013
Response to Request for Additional Information

Attached are the responses to the NRC staff questions included in Request for Additional Information (RAI) letter number 297 related to Combined License Application (COLA) Part 2, Tier 2, Sections 3.8.1 and 3.8.5.

Attachments 1 through 5 address the responses to the RAI questions listed below:

RAI 03.08.01-6
RAI 03.08.01-7
RAI 03.08.01-8
RAI 03.08.05-2
RAI 03.08.05-3

There are no commitments in this letter.

If you have any questions, please contact me at (361) 972-7206, or Bill Mookhoek at (361) 972-7274.

STI 32600094 D091 NRO

I declare under penalty of perjury that the foregoing is true and correct.

Executed on 1/14/2010

MAMcBurnett

Mark McBurnett
Vice-President, Oversight and Regulatory Affairs
South Texas Project Units 3 & 4

jep

Attachments:

1. RAI 03.08.01-6
2. RAI 03.08.01-7
3. RAI 03.08.01-8
4. RAI 03.08.05-2
5. RAI 03.08.05-3

cc: w/o attachment except*
(paper copy)

Director, Office of New Reactors
U. S. Nuclear Regulatory Commission
One White Flint North
11555 Rockville Pike
Rockville, MD 20852-2738

Regional Administrator, Region IV
U. S. Nuclear Regulatory Commission
611 Ryan Plaza Drive, Suite 400
Arlington, Texas 76011-8064

Kathy C. Perkins, RN, MBA
Assistant Commissioner
Division for Regulatory Services
Texas Department of State Health Services
P. O. Box 149347
Austin, Texas 78714-9347

Alice Hamilton Rogers, P.E.
Inspections Unit Manager
Texas Department of State Health Services
P.O. Box 149347
Austin, TX 87814-9347

C. M. Canady
City of Austin
Electric Utility Department
721 Barton Springs Road
Austin, TX 78704

*Steven P. Frantz, Esquire
A. H. Gutterman, Esquire
Morgan, Lewis & Bockius LLP
1111 Pennsylvania Ave. NW
Washington D.C. 20004

*George F. Wunder
*Tom Tai
Two White Flint North
11545 Rockville Pike
Rockville, MD 20852

(electronic copy)

*George F. Wunder
*Tom Tai
Loren R. Plisco
U. S. Nuclear Regulatory Commission

Steve Winn
Joseph Kiwak
Eli Smith
Nuclear Innovation North America

Jon C. Wood, Esquire
Cox Smith Matthews

J. J. Nesrsta
Kevin Pollo
L. D. Blaylock
CPS Energy

RAI 03.08.01-6

QUESTION:

Follow-up question to Question 03.08.01-3 (RAI 2962)

The applicant's response to Question 03.08.01-3 identifies the watertight doors that will be required to protect safety-related systems and components against a probable maximum flood (PMF) and states that these doors are designed as Seismic Category I for site-specific loads. The applicant also states that the watertight doors between the Control Building and the Service Building and between the Control Building and the Radwaste Building Access Corridor (1) provide access to and egress from the Control Building, (2) will normally remain open and will be closed only upon the indication of an imminent flood, and (3) are controlled by station procedures. Because these doors play a significant role in protecting safety-related systems, structures, and components (SSC) and constitute a special design feature, the staff requests the applicant to provide additional information about these doors and to update the FSAR as necessary, as stated below, in order for the staff to complete the evaluation:

(1) Include the seismic classification of the watertight doors in other relevant sections of the FSAR (e.g., Table 3.2-1) in order to ensure that these doors, including all components of the doors, will be appropriately treated for design, construction, installation, quality control, and maintenance, or explain why it is not necessary to do so.

(2) Identify the location of the additional watertight door between the Control Building and the Radwaste Building Access Corridor. This is not clear from the response to Question 03.08.04-3. Please identify the location of this door in a drawing.

(3) Clearly state in the FSAR the (a) site-specific loads and load combinations, (b) applicable codes and standards, (c) design and analysis procedures, (d) structural acceptance criteria, (e) materials and quality control, and (f) testing and in-service surveillance programs used to design, construct, install, and maintain these doors and all of the components following the guidance in SRP 3.8.4 (SRP Acceptance Criteria 1 through 7), or explain why it is not necessary to do so.

(4) Explain what mechanism is in place to ensure that the requirement for the normally open watertight doors to be closed upon the indication of an imminent flood will be included in the station procedures. Also confirm whether the adequacy of the station procedures to effectively close these doors when needed has been evaluated.

(5) Describe whether any redundancy features were considered for the watertight doors, particularly those that are normally open.

(6) Clarify what appears to be access doors between the Control Building and the Reactor Building that are not identified as watertight doors to be utilized for protection against external flooding. Since there is a gap between these buildings, explain what design feature is provided to ensure that flood water cannot enter the Reactor Building and the Control Building through these access areas.

RESPONSE:

1) COLA Part 2, Tier 2 Table 3.2-1 will be revised with a footnote added to the Reactor Building and Control Building rows to state that watertight doors which protect the safety-related equipment from an external flood are designated as Seismic Category I.

2) The attached sketch shows the additional watertight door between the Control Building and the Radwaste Building Access Corridor. Note that there is another exterior door by the stairwell shown on this sketch which does not need to be watertight because it will be located above the design basis flood level.

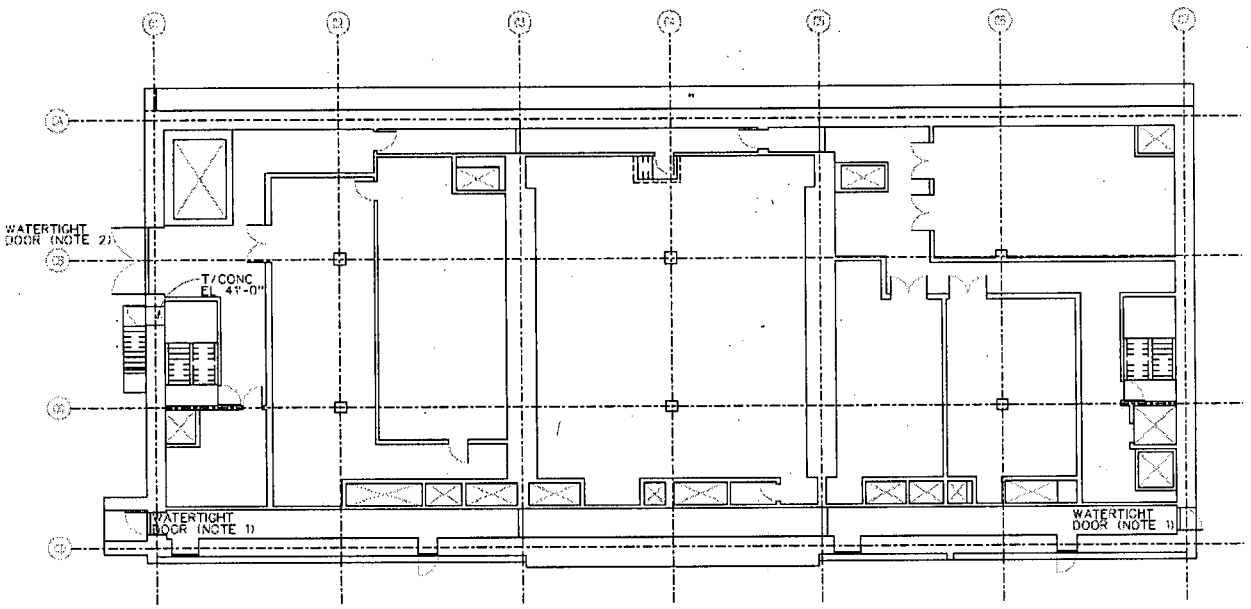

Control Building Arrangement, Floor 1F - Elevation 35'-0" (12300mm)

NOTES:
1. WATERTIGHT DOOR NORMALLY OPEN.
2. WATERTIGHT DOOR NORMALLY CLOSED.

3) The design of the watertight doors which protect the safety-related equipment from an external flood will comply with Standard Review Plan (SRP) Section 3.8.4 as applicable.

   a) The site-specific loads and load combinations used in the design of the exterior watertight doors which protect the plant against the design basis flood are the same, as applicable, to those used for site-specific structures as described in COLA Part 2,

Tier 2, Section 3H.6.4. Doors, frames, and other components shall be designed to resist the following load combinations:

$S = D + W$

$S = D + P$

$1.6S = D + P + E'$

$1.6S = D + W_t$ (See definition below)

Where:

S	=	Normal allowable stresses as defined in AISC N690
D	=	Dead loads
P	=	Pressure Loads (Hydrostatic or Differential pressure)
E'	=	Loads generated by site-specific SSE
W	=	Wind loads, per COLA Part 2, Tier 2, Section 3H.6.4
W_t	=	Tornado loads including wind velocity pressure W_w, differential pressure W_p, and tornado-generated missiles (if not protected) W_m, per COLA Part 2, Tier 2, Section 3H.6.4

The value used for W_t shall be computed to satisfy the following possible combinations:

$W_t = W_w$

$W_t = W_p$

$W_t = W_m$

$W_t = W_w + W_m$

$W_t = W_w + 0.5\ W_p$

$W_t = W_w + 0.5\ W_p + W_m$

b) The doors will be designed in accordance with AISC N690.

c) The design of the door will be performed in accordance with the requirements of SRP Section 3.8.4.

d) The structural acceptance criteria shall be in accordance with AISC N690.

e) The structural steel used for the watertight doors conforms to ASTM A36, ASTM A992 or ASTM A500 Grade B. The faceplate conforms to ASTM A606, Type 4 and the rubber gasket conforms to ASTM D2000, Grade BC. Fabrication of the doors shall meet the requirements of AISC N690. The welding shall meet the requirements

of nondestructive testing, personnel qualifications and acceptance criteria contained in AWS D1.1.

f) The water retaining capability of the doors shall be demonstrated by qualification tests for the water head levels. These tests will be completed prior to shipment of the doors. For this purpose a test fixture may be used, with gasket material and cross section, its retainers, and the anvil configuration being identical to that of the full size doors. The test fixture shall have the necessary valving, pressure gages, flow meters, and instruments for measuring gasket compression. When subjected to the specified head pressure plus a 25% margin for one hour, the leakage shall not exceed 1/10 gallon per linear foot of gasket.

4) Section 19.9.3 of the COLA describes the attributes of the station procedure that will be developed to respond to severe external flooding. Station Commitment 19.9-3 provides the tracking mechanism for insuring that this procedure will be in place prior to fuel load. COLA Section 19R.7.5.1, Main Cooling Reservoir Breach Accident, describes the time available for the operators to respond to the rising water level for a Main Cooling Reservoir Breach. At least 30 minutes are available to close the watertight doors from the time the water reaches the security access point south of the Units at El. 32.0 feet until water level reaches the entrance elevation of safety-related structures at El. 35.0 feet using the design basis flood evaluation described in COLA Section 2.4S.4.

5) Single failure assumptions are not typically imposed on design basis external event calculations as they are conservative by design. Redundancy was not considered for the external or internal watertight doors used to control the effects of flooding.

6) The access doors between the Reactor Building and Control Building are not required to be watertight since both buildings are separately protected from the design basis flood. The gaps between the buildings will be sealed using the detail shown in Figure 03-08-04-15A attached to the response to RAI 03.08.04-15 (see STPNOC letter U7-C-STP-NRC-090160 dated October 5, 2009).

STP Units 3 and 4 COLA will be revised as noted below as a result of this response.

A) In Section 3.2 a footnote will be added to Table 3.2-1 for U10, Reactor Building and U12, Control Building, as follows.

3.2 Classification of Structures, Components, and Systems

The information in this section of the reference ABWR DCD, including all subsections, tables and figures, is incorporated by reference with the following departures and supplement (Hot Machine Shop). Note that the departures used for Table 3.2-1 are numbered with {} brackets.

{7} STD DEP T1 2.4-3 Reactor Core Isolation Cooling System

{6} STD DEP T1 2.14-1 Hydrogen Recombiner Requirements Elimination

{8} STP DEP T1 5.0-1 Site Parameters

Table 3.2-1 Classification Summary

Principal Component[a]	Safety Class[b]	Location[c]	Quality Group Classification[d]	Quality Assurance Requirement[e]	Seismic Category[f]	Notes
U10 Reactor Building {8}	3	C SC RZ M	[redacted]	B	I	(ii)
U12 Control Building {8}	3	X	[redacted]	B	I	(ii)

Table 3.2-1 Notes and Footnotes

ii. Watertight doors that protect safety-related equipment from the Design Basis Flood are designated as Seismic Category I.

B) The revision of Section 3.8.6.4 proposed in RAI 03.04.02-2 (Attachment 11 to STPNOC letter U7-C-STP-NRC-090161 dated October 7, 2009) will be replaced with the following:

In addition to the above structures, watertight doors are required on the Reactor and Control Buildings to protect the buildings from the external design basis flood. These watertight doors are considered site-specific Seismic Category I components.

The watertight doors for the Reactor Building to be utilized for protection against external flooding consist of the five exterior doors and the exterior Large Equipment Access Building door shown in COLA Part 2 Tier 1 Figure 2.15.10j. The watertight doors for the Control Building to be utilized for protection against external flooding consist of the exterior equipment access door and an access door between the Control Building and the Service Building shown in DCD

Tier 1 Figure 2.15.12g and an additional access door between the Control Building and Radwaste Building Access Corridor.

Since the function of these watertight doors is to protect safety-related SSCs in the event of the Design Basis Flood, they are considered safety-related and designed as Seismic Category I for the site-specific loading.

Exterior openings of the Reactor Building and Control Building which could make safety-related SSCs vulnerable to tornado missiles are protected by separate barriers or doors designed to resist tornado missiles.

The watertight doors are seated such that the force of the water helps maintain the watertight seal. The watertight doors are designed to be leak tight. Watertight doors will be individually engineered assemblies designed by the supplier to satisfy the design basis performance requirements for external flooding. Watertight doors will allow only slight seepage during an external flooding event in accordance with criteria for Type 2 closures in U. S. Army Corps of Engineers (COE) EP 1165-2-314, "Flood-Proofing Regulations", 1992. This criterion will be met under hydrostatic loading of 12 inches of water above the design basis flood elevation. The water retaining capability of the doors shall be demonstrated by qualification tests for the water head levels. These tests will be completed prior to shipment of the doors. For this purpose a test fixture may be used, with gasket material and cross section, its retainers, and the anvil configuration being identical to that of the full size doors. The test fixture shall have the necessary valving, pressure gages, flow meters, and instruments for measuring gasket compression. To validate that the door satisfies a Type 2 closure per (COE) EP 1165-2-314, the leakage shall not exceed 1/10 gallon per linear foot of gasket when subjected to the specified head pressure plus a 25% margin for one hour.

The door openings which provide access for maintenance are normally closed and are not used for normal access to and from the Reactor Building and the Control Building. The grade floor door openings between the Control Building and the Service Building and between the Control Building and Radwaste Building Access Corridor provide access and egress from the Control Building. The flood resistant doors in these openings are normally open and closed only upon indication of an imminent flood. Separate access doors which function as fire doors are normally closed, but are compliant with the requirements of NFPA 101 for egress. The operation of the watertight doors is controlled by station procedures.

The watertight doors, frames, and all components are designed to the requirements of AISC N690. The structural steel used for the watertight doors conforms to either ASTM A36, ASTM A992 or ASTM A500 Grade B. The faceplate conforms to ASTM A606, type 4 and the rubber gasket conforms to ASTM D2000, Grade BC. Fabrication of the doors shall meet the requirements of AISC N690. The welding shall meet the requirements of nondestructive testing, personnel qualifications and acceptance criteria contained in AWS D1.1.

The watertight doors are designed to resist the following load combinations:

$S = D + W$

$S = D + P$

$1.6S = D + P + E$

$1.6S = D + W_t$ (See definition below)

Where:

S = Normal allowable stresses as defined in AISC N690

D = Dead loads

P = Pressure Loads (Hydrostatic or Differential pressure)

E' = Loads generated by a site-specific SSE

W = Normal wind loads, per FSAR Section 3H.6

W_t = Tornado loads including wind velocity pressure W_w, differential pressure W_p, and tornado-generated missiles (if not protected) W_m, per FSAR Section 3H.6

The value used for W_t shall be computed to satisfy the following possible ombinations:

$W_t = W_w$

$W_t = W_p$

$W_t = W_m$

$W_t = W_w + W_m$

$W_t = W_w + 0.5\,W_p$

$W_t = W_w + 0.5\,W_p + W_m$

RAI 03.08.01-7

QUESTION:

Follow-up question to Question 03.08.01-4 (RAI 2962)

The staff reviewed the applicant's response to Question 03.08.01-4 addressing the evaluation of standard plant structures for the increased flood level and needs the following additional information to complete the review:

(1) The applicant's response compares the out-of-plane shear and moment demands due to flood pressure with those due to the seismic load. The applicant did not include in its response any description or explanation about how the out-of-plane shear and moment demand for flood load and seismic load were obtained for the evaluation. Therefore, the staff requests the applicant to provide a detailed description of how the representative wall elements for the reactor building (RB) and the control building (CB) were selected for the evaluation, and how the reported shear and moment demands for flood and seismic load were determined.

(2) In its evaluation for impact of increased flood level on sliding and overturning stability, the applicant considered only the flood load acting on the bottom 6 ft of the above ground portion of the RB and the CB excluding buoyancy, and made a qualitative statement that the flood load is substantially less than the seismic load. Please explain why sliding and overturning of the structures due to flooding need not consider the hydrodynamic loads and the buoyancy effects on the structures, and provide a quantitative evaluation of sliding and overturning stability due to flooding. Please also update the FSAR to reflect that sliding and overturning of the RB and the CB were evaluated for the increased flood load on these structures.

(3) The applicant's response revises the factors of safety due to floatation for the RB and the CB, which are different from the values reported in Tables 3H.1-23 and 3H.2-5 of the ABWR DCD and in revised FSAR Sections 3H.1.6 and 3H.2.6. However, the applicant's response does not include the revision to the above ABWR DCD tables. Because the values of the floatation safety factors reported in DCD Tables 3H.1-23 and 3H.2-5 are no longer valid for the STP Units 3 and 4, the applicant is requested to address the issue appropriately.

RESPONSE:

(1) Comparison of Out-of-Plane Shear and Moment Demands due to Flood and Seismic

The reported shear and moment demand comparison for the flood and seismic loadings in response to RAI 03.08.01-4 (see STPNOC letter U7-C-STP-NRC-090136 dated September 15, 2009) was determined using the following parameters:

(a) Reactor Building:

Design of exterior walls of the Reactor Building under safe Shutdown Earthquake (SSE) loading will have to accommodate both in-plane and out-of-plane seismic loads. For the above grade walls, the design-basis flood only affects the bottom 6 feet of the structure; thus, any in-plane load in the exterior walls due to design basis flood will be negligible in comparison to the seismic in-plane loads. However, when conservatively comparing the demand under seismic loading to the demand for flood loading, in-plane loads effect will be neglected and the comparison will be based on the demand for out-of-plane loads only. The parameters for determination of shear and moment demands for out-of-plane loads were as follows:

Seismic Loading:
Seismic acceleration at grade level = 0.47g (Conservative, see DCD Table 3A-23a, rigid zone acceleration for node 103)
Wall thickness = 4.3 ft
Wall weight = 150 lb/ft^3
Simply supported wall span = 20 ft (see figure below, conservatively the span is assumed to be from grade to node 102, this will yield a more critical shear demand comparison)
Applied out-of-plane load = 150 x 4.3 x 0.47 = 303.15 lb/ft^2
Calculated shear demand = 3.03 k/ft
Calculated moment demand = 15.16 k-ft/ft

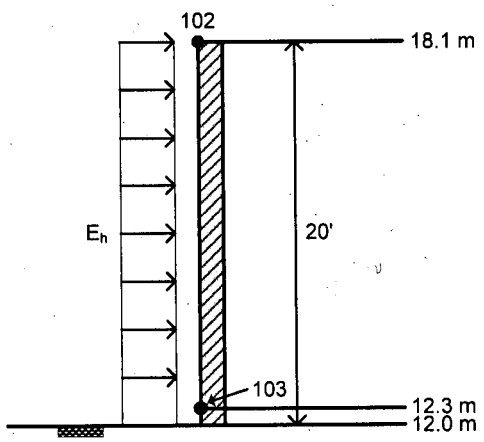

R/B

Note: For nodes 102 and 103, see DCD Figure 3A-8

Flood Loading:
Simply supported span = 20 ft
Flood height = 6 ft (above grade)
Water density = 62.4 lb/ft^3
Hydrostatic head at grade (F_s) = 6 x 62.4 = 374.4 lb/ft^2
Hydrodynamic load (F_d) = 44 psf (See response to RAI 03.08.01-4)
Calculated shear demand = 2.13 k/ft
Calculated moment demand = 5.44 k-ft/ft

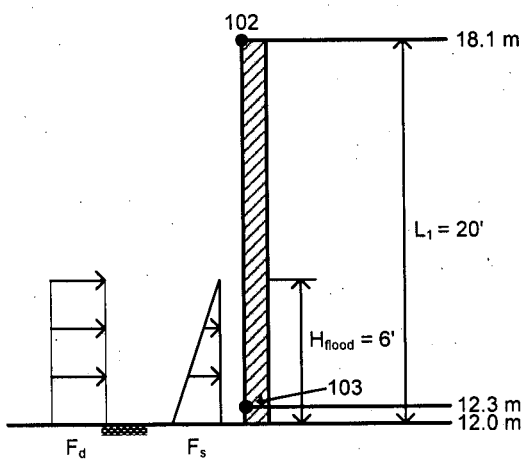

R/B

(b) Control Building:

Similar to the Reactor Building, when conservatively comparing the demand under seismic loading to the demand for flood loading, in-plane loads effect will be neglected and the comparison will be based on the demand for out-of-plane loads only. The parameters for determination of shear and moment demands for out-of-plane loads were as follows:

Seismic Loading:
Seismic acceleration at grade level = 0.52g (Conservative, see DCD Table 3A-24, rigid zone acceleration for node 106)
Wall thickness = 3.28 ft
Wall weight = 150 lb/ft^3
Simply supported wall span = 16.9 ft (see figure below, conservatively the span is assumed to be from grade to node 107, this will yield a more critical shear demand comparison)
Applied out-of-plane load = 150 x 3.28 x 0.52 = 255.84 lb/ft^2
Calculated shear demand = 2.16 k/ft
Calculated moment demand = 9.13 k-ft/ft

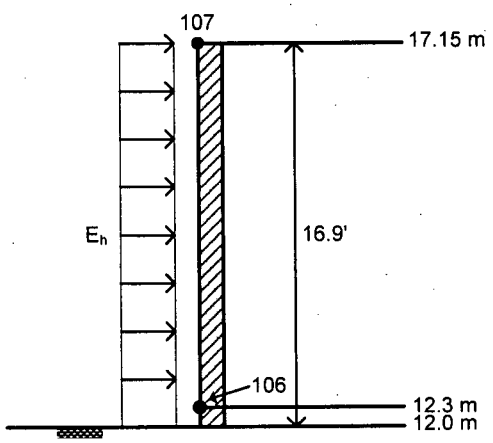

C/B

Note: For nodes 106 and 107, see DCD Figure 3A-27

Flood Loading:
Simply supported span = 16.9 ft
Flood height = 6 ft (above grade)
Water density = 62.4 lb/ft^3
Hydrostatic head at grade (F_s) = 6 x 62.4 = 374.4 lb/ft^2
Hydrodynamic load (F_d) = 44 psf (See response to RAI 03.08.01-4)
Calculated shear demand = 2.07 k/ft
Calculated moment demand = 5.1 k-ft/ft

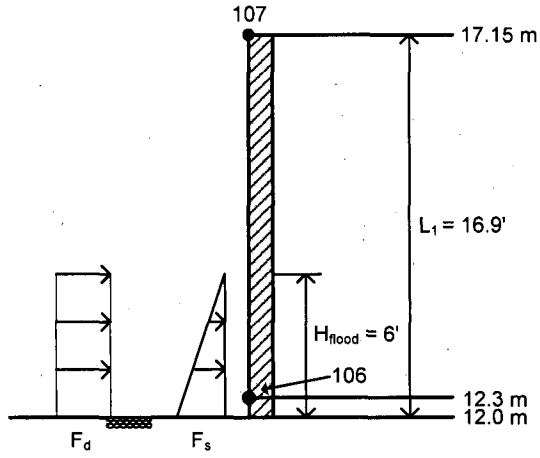

C/B

(2) Impact of Increased Flood Level on Sliding and Overturning Stability:

Stability requirements for the Reactor and Control Buildings are specified in Sections 3H.1.4.5 and 3H.2.4.5 of the ABWR DCD Tier 2, respectively. These requirements are consistent with Standard Review Plan (SRP) Section 3.8.5.

Referring to SRP Section 3.8.5 as well as the above-noted DCD Tier 2 requirements, the following load combinations and acceptance criteria are applicable:

"....., the combinations used to check against sliding and overturning attributable to earthquakes, winds, tornadoes and against flotation because of floods are acceptable if found to be in accordance with the following:

A. D + H + E
B. D + H + W
C. D + H + E'
D. D + H + Wt
E. D + F'

Where D, E, W, E', and Wt are as referenced in Subsection II.3 of SRP Section 3.8.4, where H is the lateral earth pressure, and F' is the buoyant force of the design-basis flood. Justification should be provided for including live loads or portions thereof in these combinations.

Structural Acceptance Criteria. For the loading combinations referenced in the first paragraph of Subsection II.3 of this SRP section, the allowable limits that constitute the acceptance criteria are referenced in Subsection II.5 of SRP Section 3.8.1 for the containment foundation and in Subsection II.5 of SRP Section 3.8.4 for all other foundations. In addition, for the five other load combinations in Subsection II.3 of this SRP section, the factors of safety against overturning, sliding, and flotation are acceptable if found to be in accordance with the following:

Minimum Factors of Safety

For Combination	Overturning	Sliding	Flotation
a.	1.5	1.5	---
b.	1.5	1.5	---
c.	1.1	1.1	---
d.	1.1	1.1	---
e. -	---	---	1.1 "

As can be seen from the above, when considering design-basis flood, neither SRP Section 3.8.5 nor DCD require checking sliding and/or overturning. Nonetheless, even if one were to check sliding and overturning due to unbalanced forces on the Reactor and Control Buildings due to the design-basis flood (only 6 feet above grade), the unbalanced forces due to design-basis flood in comparison to the unbalanced loads due to seismic SSE will be quite negligible such that even with increased buoyant force due to additional 7 feet of water (from ground water elevation of 33 ft to design-basis flood level of 40 ft), the seismic load combination will remain as the controlling load combination for sliding and overturning of the Reactor and Control Buildings.

As noted in our response to RAI 03.08.01-4, as a result of 7 feet increase in the elevation of design-basis flood, the flotation factors of safety for the Reactor and Control Buildings will reduce to 2.24 and 1.3, respectively. These revised safety factors are acceptable since they exceed the required flotation safety factor of 1.1 in accordance with the DCD and SRP Section 3.8.5.

(3) Update of Tables 3H.1-23 and 3H.2-5:

The COLA will be revised with the following site-specific supplemental information from DCD Tier 2, Subsections 3H.1.6, 3H.2.6 and Table 3H.1-23 and 3H.2-5 as revised below:

a. Section 3H.1.6

As documented in Subsection 3.4, the STP 3 & 4 site has a design basis flood elevation that is 182.9 cm above grade. This results in an increase in the flood level over what was used in the ABWR Standard Plant, however the load due to the revised flood level on the RB is less than the ABWR Standard Plant RB seismic load, hence it doesn't affect the Standard Plant RB structural design.

The factor of safety against floatation has been calculated and is shown in revised Table 3H.1-23.

Table 3H.1-23 Factors of Safety for Foundation Stability*

Load Combination	Overturning		Sliding		Floatation	
	Req'd.	Actual	Req'd.	Actual	Req'd.	Actual
D + F'					1.1	~~2.43~~**2.24**
D + Lo + F + H+ Ess	1.1	490	1.1	1.11		

Here:
F = Buoyant Forces from Design Ground Water (0.61m Below Grade)
F' = Buoyant Forces from Design Basis Flood (~~0.3m Below~~ **1.83m Above** Grade)
H = Lateral Soil Pressure
Lo = Live Load Acting During an Earthquake (Zero Live Load is Considered).
Ess = SSE Load
D = Dead Load

b. Section 3H.2.6

As documented in Subsection 3.4, the STP 3 & 4 site has a design basis flood elevation that is 182.9 cm above grade. This results in an increase in the flood level over what was used in the ABWR Standard Plant, however the load due to the revised flood level on the CB is less than the ABWR Standard Plant seismic load, hence it does not eaffect the Standard Plant CB structural design.

The factor of safety against floatation has been calculated and is shown in revised Table 3H.2-5.

Table 3H.2-5 Stability Evaluation–Factors of Safety

Load Combination	Overturning		Sliding		Flotation	
	Required	Actual	Required	Actual	Required	Actual
D+F'	–	–	–	–	1.1	~~1.42~~**1.30**
D+F+H+W	1.5	2.79	1.5	2.74	–	–
D+F+H+Wt D+Lo+F+H'+E'**	1.1 1.1	2.66 123*	1.1 1.1	2.69 1.14	– –	– –

* Based on the energy technique
** Zero live load is considered.
F' = Buoyant Forces from Design Basis Flood (1.83m Above Grade)

RAI 03.08.01-8

QUESTION:

Follow-up question to Question 03.08.01-5 (RAI 2962)

The applicant's response to Question 03.08.01-5 states that the changes in loads on the containment internal structures due to the increase in pool swell height and pressure will be addressed during the detail design phase. However, ABWR DCD Subsection 3H.1.5.5.2 describes the design of the containment internal structures, load combination (including pool swell loads), and analysis and design results. These are incorporated by reference in FSAR Section 3H. Also, pool swell loads are used in loading combinations for design of the containment structure, and analysis and design results for the containment structure are reported in Appendix 3H. Since the changes in loads due to increases in pool swell height and pressure on the concrete containment and containment internal structures are not addressed at this time, the applicant is requested to provide a quantitative evaluation and confirm that the increased pool swell height and pressure will not have an adverse impact on the design of the concrete containment and the containment internal structures, and that it is appropriate to incorporate by reference the analysis and design results for the containment and the containment internal structure reported in Appendix 3H of ABWR DCD.

RESPONSE:

The evaluations of the effect of the increased pool swell height and pressure on the concrete containment and containment internal structures are scheduled to be completed by August 1, 2010. Confirmation of incorporation by reference will also be done when the detailed analysis results are available.

No COLA change is required as a result of this response.

RAI 03.08.05-2

QUESTION:

Follow-up to Question 03.08.05-1 (RAI 3324)

The applicant's response to RAI 03.08.05-1 states that "the differential settlements will be determined based on detailed settlement calculations considering the time rate of settlements and construction sequence. Additional information on settlements is provided in the response to RAI 02.05.04-30 (see letter U7-C-STP-NRC-090146 dated September 21, 2009)."

Although the applicant's response to RAI 02.05.04-30 provides general information on the settlement study, the applicant did not provide any information regarding magnitudes of the differential settlements considered for design of site-specific seismic category I structures, and how the differential settlements were included in the analysis of these structures. Therefore, the applicant is requested to clearly describe the magnitudes of differential settlements considered for design of site-specific seismic category I structures, and also explain how differential settlements were accounted for in the analysis of these structures. This information is needed so the staff can conclude that the design of site-specific seismic category I structures has appropriately considered the differential settlements.

Also, the applicant stated in its response that information pertaining to analysis and design results including the coefficient of friction used for sliding evaluation, calculated factors of safety for static and dynamic bearing pressures, lateral pressure on foundation walls, and design details of foundation walls and mat will be provided in a supplemental response to RAI 03.07.01-13 by December 31, 2009. The applicant is requested to either include the above information in its response, or include the information in the December supplemental response, and update the FSAR with relevant information, as appropriate.

RESPONSE:

There are three different effects of settlements which need to be considered in design of structures. Each of these effects is discussed in the following paragraphs.

a. Rigid Body Angular Distortions/Tilts

COLA Part 2, Tier 2, Section 2.5S.4.10 presents conservatively calculated angular distortions/tilts based on conservatively estimated differential settlements of each structure. The calculation assumed a perfectly flexible structure with no applied reduction due to buoyancy or structural rigidity. As explained in the response to RAI 03.08.05-3, the calculated tilt values are acceptable and no additional consideration is needed in the design of structures for these tilt values.

b. Differential Settlement due to Flexibility of Structure/Basemat and Supporting Soil

Settlements due to flexibility of structure/basemat and supporting soil induce stresses within the structure. In the analysis and design of the site-specific seismic category I structures, this effect is accounted for through the use of Finite Element Analysis (FEA) in conjunction with foundation soil springs. FEA representation of the structure accounts for the flexibility of structure/basemat, and the soil springs with their stiffness based on subgrade modulus, which is a function of the foundation settlement, account for the flexibility of the supporting soil medium. The information on the analysis and design of the site-specific structures provided in Supplement 2 to the response to RAI 03.07.01-13 (see STPNOC letter U7-C-STP-NRC-090230, dated December 30, 2009) is based on the FEA that includes the foundation soil springs, and thus incorporates the effect of this differential settlement.

c. Differential Settlement between Buildings

Differential settlements due to structural backfill, loading of other structures and consolidation of clay layers result in differential settlements between the buildings and angular distortions/tilts. These differential settlements and angular distortions/tilts will impact the design of commodities and tunnels running between the buildings and the seismic gaps among the adjacent buildings. The magnitude of these impacts will be minimized by delaying final connections to a time when the majority of the differential settlements and angular distortions/tilts have already taken place. The timing for the final connection of such commodities and tunnels will be established based on time-rate of settlement analyses described in the response to RAI 02.05.04-30 (see STPNOC letter U7-C-STP-NRC-090146 dated September 21, 2009).

The total movement for design of commodities and tunnels running between buildings and seismic gaps of the adjacent buildings will be determined considering the differential settlements and angular distortions/tilts from the time-rate of settlement analysis and any additional movement during a seismic event.

Time-rate of settlement analyses are currently being performed. The results of these analyses and the differential movement for design of commodities and tunnels running between the buildings and the seismic gap between the adjacent buildings will be provided by July 1, 2010.

The information on the analysis and design of the site-specific structures has been provided in Supplement 2 to the response to RAI 03.07.01-13 (see STPNOC letter U7-C-STP-NRC-090230, dated December 30, 2009).

No COLA revision is required as a result of this response.

RAI 03.08.05-3

QUESTION:

In FSAR Section 3.8.6.2, "Site Specific Physical Properties and Foundation Settlement," the applicant referred to FSAR Sections 3H.6.4.2 and 2.5S.4 to address COL License Information Item 3.24, which required that the physical properties of the site-specific subgrade medium be determined, and the settlement of foundations and structures, including seismic category I, be evaluated. In FSAR Section 2.5S.4.10.4, the applicant provided a settlement evaluation of the structures and stated that "from the differential settlement value, angular distortions/tilts were estimated (based on average foundation plan dimension), and for all evaluated structures were within the acceptable limit of 1/300." It is not clear if the applicant implied that the ABWR DCD standard plant structures were designed using the above acceptable limit. Therefore, the applicant is requested to confirm that the angular distortions/tilts due to differential settlement determined for the STP site are enveloped by the corresponding values used for design of ABWR DCD standard plant structures, and if not, provide justification for acceptability of angular distortions determined for these structures for the STP site. Please also explain how the site-specific differential settlements between adjacent buildings are considered acceptable in relation to their impact on tunnels and other commodities between these buildings for the standard plant structures. Please include pertinent references to the sources of any information used in the response. This information is needed so the staff can conclude that the applicant has completed all actions required by COL License Information Item 3.24.

RESPONSE:

The ABWR DCD does not contain any criteria for settlement-related angular distortions/tilts.

The angular distortions/tilts determined for the structures for the STP site are compared in the COLA to commonly-stated empirical values in the literature.

The criteria presented in COLA Part 2 Tier 2, Section 2.5S.4.10 indicates acceptable angular distortions/tilts of less than 1/300 as presented by Bowles in Table 5-7 (Reference 5, which is the same as COLA Reference 2.5S.4-55) and by Das in Section 5.20 (Reference 6). The 1/300 criteria presented by Bowles and Das is based on work by MacDonald and Skempton (Reference 1). MacDonald and Skempton reported that an angular distortion of 1/300 will cause fractures and 1/150 will cause structural damage. Bjerrum (Reference 2) presented his limiting angular distortion values incorporating the MacDonald and Skempton work. Bjerrum indicates an angular distortion of 1/500 as a safe limit (including a factor of safety) for no cracking in buildings. Bjerrum indicates 1/300 as first cracking of panel walls and 1/150 as a limit for danger of structural damage to most buildings. The 1/300 angular distortion criteria of MacDonald and Skempton was also substantiated by Feld (Reference 3) and a study by Grant, Christian, and Vanmarcke (Reference 4). Thus, the generally accepted engineering standard of practice is to allow for an angular distortion of no greater than 1/300.

The tilt angles of the structures are not directly a structural design criterion but are a "rigid block" rotation that may affect appearance and serviceability. The calculated maximum flexible angular distortions/tilts presented in COLA Part 2 Tier 2, Section 2.5S.4.10 range from 1/400 to 1/1750 for Seismic Category I structures. As noted in Section 2.5S.4.10.4, the structure/basemat rigidity will reduce the angular distortions/tilts values to at most half of those shown, or to 1/800 to 1/3500 which are well within the envelope of the 1/300 limit cited in the COLA. Tilt of the Seismic Category I structures of the STP site is therefore acceptably low. In the structural analysis and design of these structures, the induced stresses within the structure due to structural and foundation flexibility are accounted for as explained in the response to RAI 03.08.05-2.

For impact of the site-specific differential settlement between adjacent structures on the tunnels and other commodities between the buildings, please see response to RAI 03.08.05-2.

References (used herein for this RAI response):

1. MacDonald, D.H. and Skempton, A.W., 1955, "A Survey of Comparisons between Calculated and Observed Settlements of Structures on Clay", Conference on Correlation of Calculated and Observed Stresses and Displacements, ICE London.
2. Bjerrum, L., 1963, "Allowable Settlement of Structures", Proceedings European Conference on Soil Mechanics and Foundation Engineering, Vol. III.
3. Feld, J., 1965, "Tolerance of Structures to Settlement: J. Soil Mech. And Found. Div., 91 (SM3), ASCE", pp. 555-569.
4. Grant, R., Christian, J.T., Vanmarcke, E.H., 1994, "Differential Settlement of Buildings", Journal of Geotechnical Engineering Division, ASCE, Vol. 100, No. GT9, Proceedings Paper 10802.
5. Bowles, J. E., 1996, "Foundation Analysis and Design, (5th edition)".
6. Das, Braja, M., 2007, "Principles of Foundation Engineering," 6th Edition.

No COLA revision is required as a result of this response.