Westinghouse

Westinghouse Electric Company
Nuclear Power Plants
P.O. Box 355
Pittsburgh, Pennsylvania 15230-0355
USA

U.S. Nuclear Regulatory Commission
ATTENTION: Document Control Desk
Washington, D.C. 20555

Direct tel: 412-374-6206
Direct fax: 724-940-8505
e-mail: sisk1rb@westinghouse.com

Your ref: Docket No. 52-006
Our ref: DCP_NRC_002738

January 15, 2010

Subject: AP1000 Response to Request for Additional Information (SRP 5)

Westinghouse is submitting a response to the NRC request for additional information (RAI) on SRP Section 5. This RAI response is submitted in support of the AP1000 Design Certification Amendment Application (Docket No. 52-006). The information included in this response is generic and is expected to apply to all COL applications referencing the AP1000 Design Certification and the AP1000 Design Certification Amendment Application.

Enclosure 1 provides the response for the following RAI(s):

RAI-SRP5.2.3-CIB1-03

Questions or requests for additional information related to the content and preparation of this response should be directed to Westinghouse. Please send copies of such questions or requests to the prospective applicants for combined licenses referencing the AP1000 Design Certification. A representative for each applicant is included on the cc: list of this letter.

Very truly yours,

Robert Sisk, Manager
Licensing and Customer Interface
Regulatory Affairs and Standardization

/Enclosure

1. Response to Request for Additional Information on SRP Section 5

D063
NRO

cc:	D. Jaffe	-	U.S. NRC	1E
	E. McKenna	-	U.S. NRC	1E
	P. Kallan	-	U.S. NRC	1E
	P. Buckberg	-	U.S. NRC	1E
	T. Spink	-	TVA	1E
	P. Hastings	-	Duke Power	1E
	R. Kitchen	-	Progress Energy	1E
	A. Monroe	-	SCANA	1E
	P. Jacobs	-	Florida Power & Light	1E
	C. Pierce	-	Southern Company	1E
	E. Schmiech	-	Westinghouse	1E
	G. Zinke	-	NuStart/Entergy	1E
	R. Grumbir	-	NuStart	1E
	J. DeBlasio	-	Westinghouse	1E

ENCLOSURE 1

Response to Request for Additional Information on SRP Section 5

RAI Response Number: RAI-SRP5.2.3-CIB1-03
Revision: 0

Question:

Discuss the QuickLoc component specified in AP1000 DCD, FSAR Figure 5.3-1 to include at least the following information. A summary of this information should be included in the DCD.

1) What materials are used?
2) How is it welded to the top head?
3) Discuss how the pressure boundary is maintained with the QuickLoc?
4) Is the QuickLoc a flared, flareless or compression type mechanical fitting? Are flanges or gaskets used?
5) Provide a drawing/sketch detailing the QuickLoc, including the dimensions?
6) Discuss operating experience of the QuickLoc.
7) Are QuickLoc addressed in the ASME Code?
8) What type of inspections and maintenance is performed for this component (QuickLoc fittings and the weld for the QuickLoc to the reactor vessel head) to ensure the integrity of the pressure boundary.

Westinghouse Response:

1) Below is a list of the QuickLoc parts and their associated materials.

QuickLoc Part Name	Material Type
QuickLoc Can	SA-213, Type 304 SST
QuickLoc Can Base	SA-479, Type 304 SST
QuickLoc Grafoil Ring	Grafoil (See additional information below)
QuickLoc Spring	AMS 5699G, UNS N07750
*QuickLoc Plug	SA-479, UNS S21800
QuickLoc Tube Flange	SA-479, Type 304 SST
QuickLoc Seal Carrier	SA-479, Type 304 SST
QuickLoc Inner Ring	SA-479, Type 304 SST
QuickLoc Outer Ring	SA-479, Type 304 SST
QuickLoc Inner Grafoil Ring	Grafoil (See additional information below)
QuickLoc Outer Grafoil Ring	Grafoil (See additional information below)
*QuickLoc Compression Collar	SA-479, Type 304 SST
*QuickLoc Nut	SA-479, UNS S21800
*QuickLoc Modified Swagelok Body	SA-479, Type 316 SST

QuickLoc Hold Down Screw	SA-193, GRD B8M
QuickLoc Large Locking Cup	SA-479, Type 304L SST
QuickLoc Alignment Screw	SA-193, GRD B8M
QuickLoc Stalk Bottom Flange	SA-479, Type 304 SST
QuickLoc Stalk Stabilizer Flange	SA-479, Type 304 SST
QuickLoc Stop	SA-479, Type 304 SST
QuickLoc Pin	SA-479, Type 304 SST
*Swagelok Plug	SA-479, Type 316 SST
*QuickLoc Instrument Nozzle	SA-182, Type F304 SST

* Pressure Boundary Parts

All of the Grafoil Rings used for the QuickLoc are made from the same material. The raw material used in forming the Grafoil Rings is Graftech Advanced Energy Technology Inc. Grafoil Brand Flexible Graphite, Grade GTJ (99% Graphite) or Westinghouse approved equivalent, refer to the attached Technical Bulletin 102 on the following two pages. It has a nominal density of 70 lbs/ft^3. The final die formed Grafoil Rings have a density of 90 lbs/ft^3. Grafoil Grade GTJ is premium flexible graphite that was developed for use in nuclear applications. Grafoil has been used in numerous pressure boundary applications in the nuclear industry. In addition to QuickLoc, Westinghouse uses Grafoil in the CETNA, the Mechanical Nozzle Seal Assembly (MNSA), the Canopy Seal Clamp Assembly (CSCA) and Incore Instrument Plugs.

The following information is from Graftech Advanced Energy Technology Inc.

GRAFOIL®
SEALING SOLUTIONS

standard fluid sealing

Grade GTJ

TECHNICAL BULLETIN 102

Grade GTJ Specification[1]

GRAFOIL GTJ premium flexible graphite is an oxidation corrosion inhibited grade developed for use in nuclear applications. It is certified to meet the most rigorous purity specifications of the nuclear industry, including the General Electric Nuclear Nonmetallic Material Specification D50YP12 (Rev 2).

CHARACTERISTIC	INTERNAL SPECIFICATION	INSPECTION TEST METHOD
Thickness	0.010" (0.25 mm) Standard 0.015" (0.38 mm) Standard 0.030" (0.76 mm) Standard *Non-standard thicknesses may be available upon request.* Tolerance +/- 0.002" (+/- 0.05 mm)	ASTM F-104 Hand Held Micrometer
Width	24" (610 mm) Standard *Non-standard widths may be available upon request.* Tolerance +/- 0.25" (+/- 6.35 mm)	Tape Measure
Length	100' (30.5 m) Standard *Non-standard lengths may be available upon request.* Tolerance +3/-0' (+1/-0 m)	
Bulk Density	70 lb/ft^3 (1.12 g/cc) Standard *Non-standard densities may be available upon request.* Tolerance +/-10%	ASTM F-1315
Ash Content	1.0% Maximum	ASTM C-561
Carbon Content	99.0% Minimum	ASTM C-561
Leachable Chloride	50 ppm Maximum	ASTM F-1277
Phosphorus	250 ppm Minimum	Colormetric Determination
Sulfur Content	630 ppm Maximum	LECO Combustion Method
Total Halogens	450 ppm Maximum	Parr Bomb followed by Ion Chromatography
Total Nitrates	820 ppm Maximum	Aqueous Extraction followed by Ion Chromatography
Total Nitrites	5 ppm Maximum	Aqueous Extraction followed by Ion Chromatography
Certification	Certify to Grade	

$$\left(\frac{\text{Total Halogens (ppm)}}{35.453}\right) + \left(\frac{\text{Total Sulfur (ppm)}}{48.096}\right) + \left(\frac{\text{Total Nitrates (ppm)}}{62.004}\right) < 13.2 \text{ ppm}$$

[1]Typical properties are listed under Technical Bulletin 437.

For additional information, contact the GrafTech Sales Office: +1 (800) 253-8003 (Toll-Free in USA), +1 (216) 529-3777 (International), +1 (216) 529-3922 (Fax)

TB102-GF-GTJ-SPEC.doc Updated: 11/30/2006

© 2006 Advanced Energy Technology, Inc. All Rights Reserved.

This information is not to be taken as warranty of representation for which we will assume legal responsibility.
GRAFOIL, EXPANDOGRAF, GRAFKOTE, RIBBON-PACK and SUPER GTO are registered trademarks of Advanced Energy Technology, Inc. UCAR is a trademark of Union Carbide Corporation (licensed to UCAR Carbon). For patent information, visit www.grafoil.com/patents.

GRAFTech
ADVANCED ENERGY TECHNOLOGY INC.
A GrafTech International Ltd. company

GRAFOIL®
SEALING SOLUTIONS

standard fluid sealing
Grade GTJ

Total Embrittling Metals

CHARACTERISTIC	INTERNAL SPECIFICATION	INSPECTION TEST METHOD
Total Embrittling Metals	500 ppm Maximum	X-Ray Fluorescence
Silver (Ag)	200 ppm Maximum	X-Ray Fluorescence
Arsenic (As)	200 ppm Maximum	X-Ray Fluorescence
Zinc (Zn)	200 ppm Maximum	X-Ray Fluorescence
Antimony (Sb)	200 ppm Maximum	X-Ray Fluorescence
Cadmium (Cd)	100 ppm Maximum	X-Ray Fluorescence
Bismuth (Bi)	200 ppm Maximum	X-Ray Fluorescence
Mercury (Hg)	200 ppm Maximum	X-Ray Fluorescence
Gallium (Ga)	200 ppm Maximum	X-Ray Fluorescence
Indium (In)	200 ppm Maximum	X-Ray Fluorescence
Lead (Pb)	200 ppm Maximum	X-Ray Fluorescence
Tin (Sn)	200 ppm Maximum	X-Ray Fluorescence

Rev.: E
Approved: Gary Mills
Date: 11/30/20006

For additional information, contact the GrafTech Sales Office: +1 (800) 253-8003 (Toll-Free in USA), +1 (216) 529-3777 (International), +1 (216) 529-3922 (Fax)

TB102-GF-GTJ-SPEC.doc Updated: 11/30/2006

© 2006 Advanced Energy Technology, Inc. All Rights Reserved.

This information is not to be taken as warranty of representation for which we will assume legal responsibility.
GRAFOIL, EXPANDOGRAF, GRAFKOTE, RIBBON-PACK and SUPER GTO are registered trademarks of Advanced Energy Technology, Inc. UCAR is a trademark of Union Carbide Corporation (licensed to UCAR Carbon).
For patent information, visit www.grafoil.com/patents.

GRAFTech
ADVANCED ENERGY TECHNOLOGY INC.
A GrafTech International Ltd. company

2) The QuickLoc Instrument Nozzle (QIN) is the part that is welded to the top of the Reactor Vessel Closure Head (RVCH) (refer to Figure). Initially, there is a weld buildup made of P3 material on the RVCH. This weld buildup is machined and cladding is applied to the inner diameter. On the top of the weld buildup a minimum of 0.50" NI-CR-FE weld buttering is applied. Then the QIN is welded to the weld butter.

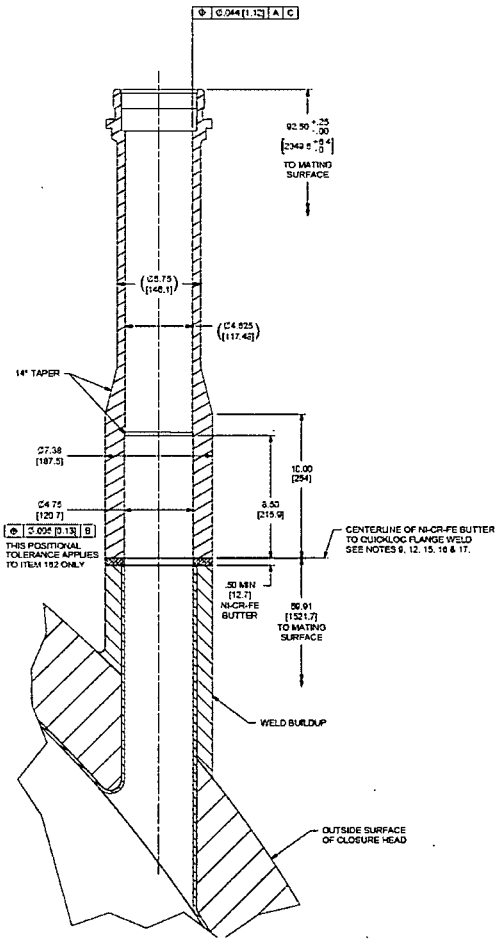

Figure 2-1: QuickLoc Instrument Nozzle (QIN)

3) There are two (2) main pressure boundaries associated with QuickLoc (see Figure 3-1 for pressure boundary components). There is a pressure boundary between the QuickLoc Plug and the Instrument Thimble Assembly (IITA); this pressure boundary is only disassembled when the IITA is replaced. The other pressure boundary is between the QuickLoc Plug and the QuickLoc Instrument Nozzle (QIN); this pressure

boundary is disassembled when the RVCH is removed.

The pressure boundary between the QuickLoc Plug and the IITA is as follows:

The pressure boundary is maintained with the QuickLoc Plug through the Modified Swagelok Body. The Modified Swagelok Body is sealed to the QuickLoc Plug by two (2) Grafoil Rings. The IITA is sealed to the Modified Swagelok Body by the Swagelok compression feature.

The pressure boundary between the QIN and the QuickLoc Plug is as follows:

The other pressure boundary connection is between the QIN and the QuickLoc Plug. Only after the Reactor Vessel Closure Head (RVCH) has been installed and has been tensioned may the pressure boundary be put together. First, the QuickLoc Seal Carrier Assembly is installed (refer to Figure 3-2). The QuickLoc Seal Carrier Assembly consists of one (1) QuickLoc Seal Carrier, two (2) QuickLoc Inner Grafoil Rings, two (2) QuickLoc Outer Grafoil Rings, one (1) QuickLoc Inner Ring, and one (1) QuickLoc Outer Ring. Next a QuickLoc Compression Collar is installed and then the QuickLoc Nut is threaded on hand tight. A QuickLoc Hydraulic Load Tool is then used to apply an axial downward force on the QuickLoc Compression Collar which in turn compresses the QuickLoc Inner and Outer Grafoil Rings created a radial sealing force between the QIN and the QuickLoc Plug. While the hydraulic load is being applied the QuickLoc Nut is hand tightened and this process is repeated two (2) more times.

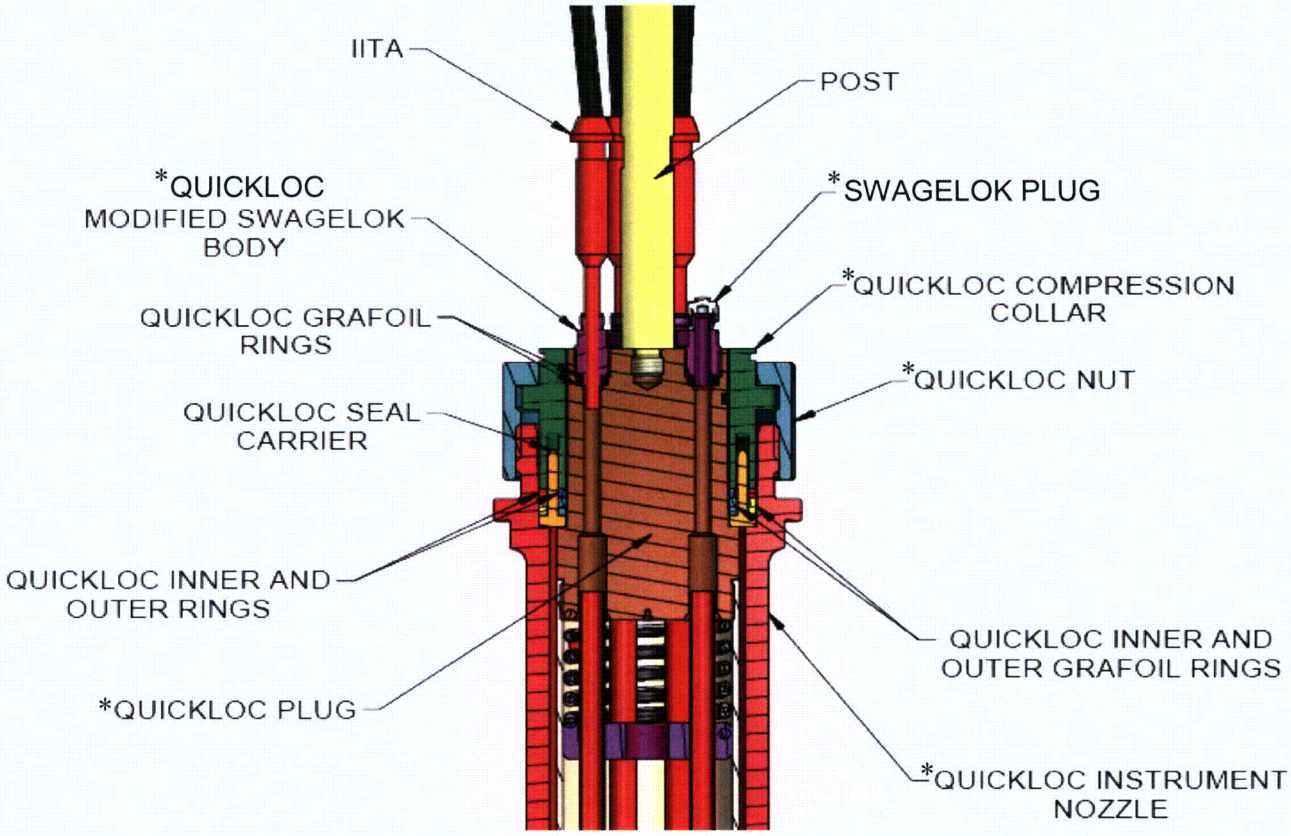

Figure 3-1: QuickLoc Pressure Boundary
(* Pressure Boundary Parts)

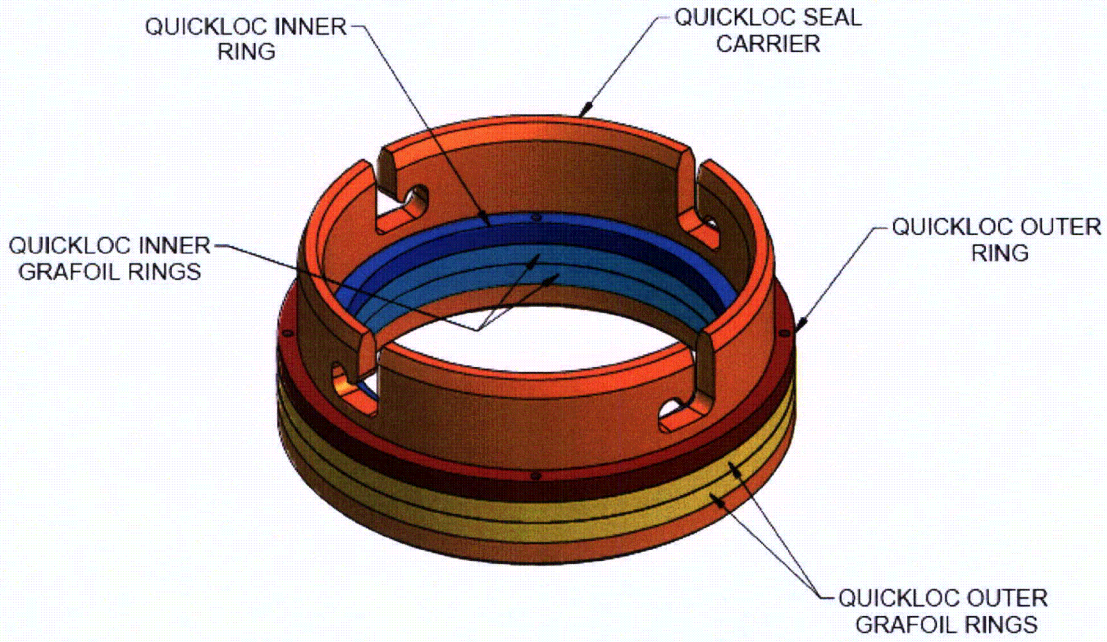

Figure 3-2: Quickloc Seal Carrier Assembly

4) Please refer to the response to Question 3 for an explanation of the QuickLoc mechanical design.

5) Figure 3-1 shows the QuickLoc pressure boundary configuration and Figure 2-1 shows the QuickLoc Instrument Nozzle (QIN) overall dimensions. The thread size on the QIN and the QuickLoc Nut is 6.25-5 ACME thread. All of the other parts of the QuickLoc fit within the QIN. The envelope dimensions of the QuickLoc Plug are approximately 4.3" outside diameter by 7.5" long.

6) The QuickLoc Stalk Assembly design has been installed in five (5) Combustion Engineering (CE) designed plants to date. These plants are Waterford Unit 3, Calvert Cliffs Units 1 and 2 and St. Lucie Units 1 and 2. QuickLoc was a modification for these plants. The dates of the QuickLoc installations are given in Table 6-1 below.

   The QuickLocs that have been properly installed have not leaked. There have been a few situations where there have been leaks due to improper installation. For these situations the assemblies were disassembled and reassembled properly and the leakage stopped. Installation manuals are provided for the QuickLocs.

Table 6-1: QuickLoc Plants and Installation Date

QuickLoc Plants	Installation Date
Waterford Unit 3	Fall 1995
St. Lucie Unit 2	Spring 1997
St. Lucie Unit 1	Fall 1997
Calvert Cliffs Unit 2	Spring 2001
Calvert Cliffs Unit 1	Spring 2006

7) The QuickLoc contains both pressure boundary and non pressure boundary (internal structure) parts (refer to Figure 7-1). Requirements for evaluating are provided in the ASME Boiler and Pressure Vessel Code, Section III Division I, Subsection NB for the pressure boundary parts. Subsection NG requirements have been specified for the non pressure boundary parts.

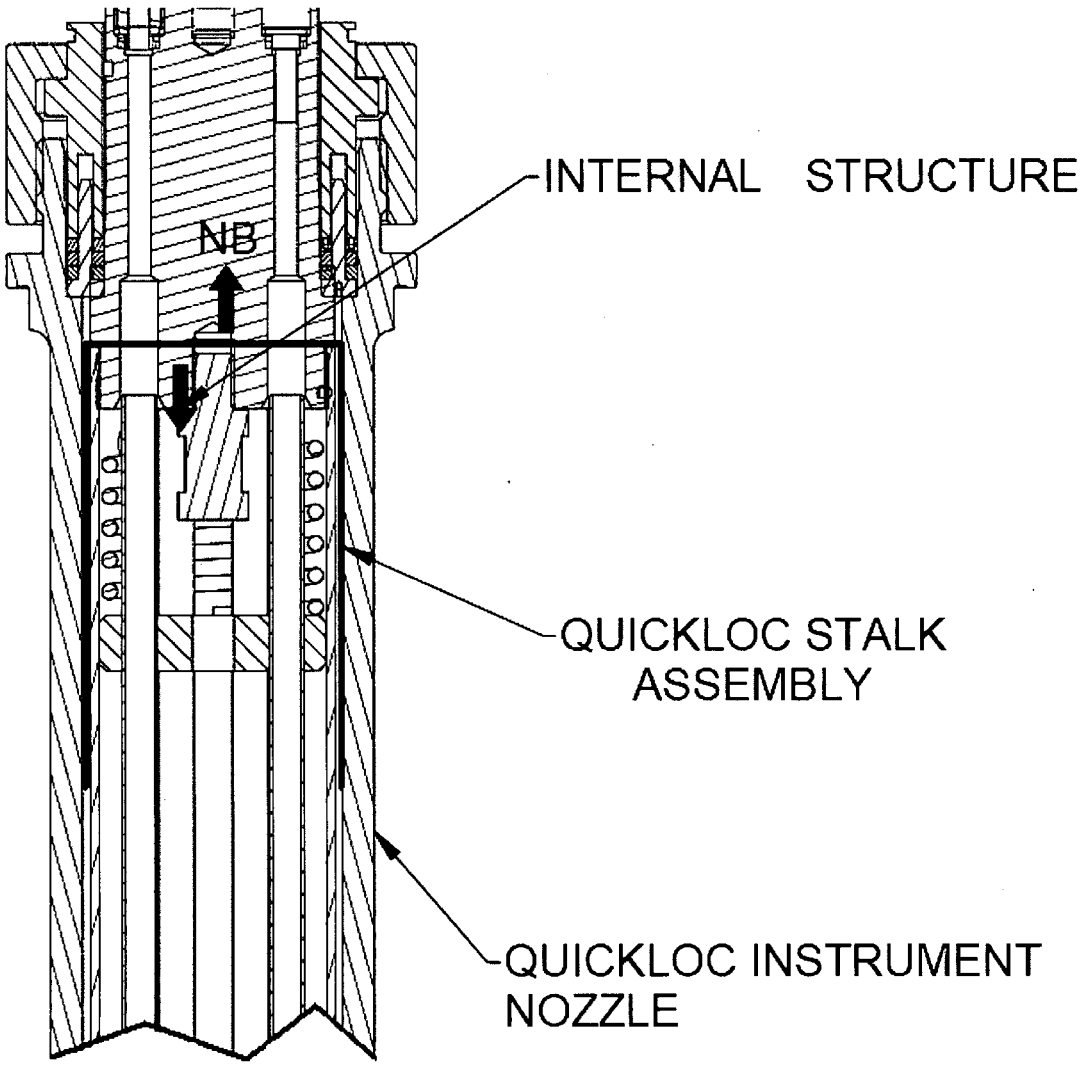

Figure 7-1: Quickloc Jurisdictional Boundary (Dark Line)

8) **QuickLoc Pressure Boundary Parts:**

Shown below is an example of the inspection requirements for the machined non-integral QuickLoc pressure boundary parts.

- The QuickLoc Instrument Nozzle Pressure Boundary parts shall be designed and fabricated in accordance with ASME B&PV Code, Section III Division 1, Subsection NB, 1998 Edition up to and including the 2000 Addenda. Classified as a primary pressure boundary part.
- Intergranular corrosion test per ASTM A262-02a (Reapproved 2008) Practice E required.
- Examination per Section III, Subsection NB-2540 is required.
- Final machined part shall be liquid penetrant examined per Section III, Subsection NB-2546.

Every time a pressure boundary is disassembled the Grafoil seals are replaced. In the case of the pressure boundary between the QIN and the QuickLoc Plug, the entire QuickLoc Seal Carrier Assembly (refer to Figure 3-2) is replaced. Also, the sealing areas are inspected for scratches or any other imperfections that may prevent a proper seal and the threads on the QuickLoc Nut and the QIN are visually inspected. The same inspection requirements are required for the Modified Swagelok Bodies and the QuickLoc Plug when the QuickLoc Modified Swagelok bodies are replaced.

QuickLoc Instrument Nozzle (QIN) / Weld / Weld Buildup:

The inspection requirements for the QIN, dissimilar metal weld and the weld buildup, which are provided below, are listed on the design drawing.

1. ALL WELDING, FABRICATION AND INSPECTION SHALL BE IN ACCORDANCE WITH THE FOLLOWING:
    - APP-MV01-Z0-101, DESIGN SPECIFICATION FOR AP1000 REACTOR VESSEL
    - APP-GW-VLR-010, AP1000 SUPPLEMENTAL FABRICATION AND INSPECTION REQUIREMENTS

    ASME BOILER AND PRESSURE VESSEL CODE:
    - SECTION II, MATERIALS
    - SECTION III, RULES FOR CONSTRUCTION OF NUCLEAR POWER PLANT COMPONENTS
    - SECTION V, NONDESTRUCTIVE EXAMINATION
    - SECTION IX, WELDING AND BRAZING QUALIFICATIONS
    - SECTION XI, RULES FOR IN-SERVICE INSPECTION OF NUCLEAR POWER PLANT COMPONENTS

2. NONDESTRUCTIVE TESTING OF WELD PREPARATION SURFACES SHALL BE IN ACCORDANCE WITH ASME B&PV CODE SECTION III, NB-5000.

3. WELD MATERIAL SHALL MEET THE REQUIREMENTS OF APP-VW30-Z0-043 (P43 BUTTER AND GROOVE WELD MATERIAL)

4. ALL BUTTERING AND REPAIRS TO BUTTERING SHALL BE ULTRASONICALLY EXAMINED (100%) TO VERIFY THAT IT IS BONDED TO THE BASE METAL AND FOR LAMINAR DEFECTS IN ACCORDANCE WITH ASME B&PV CODE SECTION V, ARTICLE 5, T-543, TECHNIQUE 1. THE EXAMINATION SHALL BE PERFORMED FROM THE PREPARED BUTTERED SURFACE USING A SUPPLIER FURNISHED CALIBRATION BLOCK. THE ACCEPTANCE STANDARD FOR THESE ULTRASONIC EXAMINATIONS IS: INDICATIONS WHICH EQUAL OR EXCEED 20% OF THE REFERENCE LEVEL SHALL BE RECORDED AND SHALL BE INVESTIGATED TO DETERMINE THE SHAPE, IDENTITY AND LOCATION OF ALL SUCH REFLECTORS. INDICATIONS WHICH EQUAL OR EXCEED 100% OF THE REFERENCE LEVEL OR ARE INTERPRETED TO BE CRACKS OR LACK OF FUSION SHALL BE REPAIRED AND RE-EXAMINED.

5. ALL WELD DEPOSITED CLADDING SHALL BE ULTRASONICALLY EXAMINED (100%) TO VERIFY THAT IT IS BONDED TO THE BASE METAL AND FOR LAMINAR DEFECTS IN ACCORDANCE WITH ASME B&PV CODE SECTION V, ARTICLE 5, T-543, TECHNIQUE 2. THE EXAMINATION SHALL BE PERFORMED FROM THE PREPARED BUTTERED SURFACE USING A SUPPLIER FURNISHED CALIBRATION BLOCK. THE ACCEPTANCE STANDARD FOR THESE ULTRASONIC EXAMINATIONS IS: THE SIZE OF CLADDING BOND DEFECT ALLOWED IS .25 INCH X .75 INCH [6.35 mm X 19.05 mm] WITH THE GREATER DIRECTION PARALLEL TO THE WELD IN THE REGION BOUNDED BY 2T (T=WALL THICKNESS) ON BOTH SIDES OF EACH FULL PENETRATION PRESSURE BOUNDARY WELD. UNBONDED AREAS EXCEEDING .442 SQUARE INCHES (.75 INCH DIAMETER) [285 SQUARE mm (19.05 mm DIAMETER)] IN OTHER AREAS ARE REJECTED.

6. FINAL THICKNESS OF NOZZLE END BUTTERING TO BE .5 INCH [12.5 mm] MINIMUM AFTER MACHINING THE QUICKLOC INSTRUMENT NOZZLE WELD PREP.

7. QUICKLOC INSTRUMENT NOZZLE TO BE WELDED TO NI-CR-FE BUTTERING AFTER FINAL POST WELD HEAT TREATMENT OF THE CLOSURE HEAD ASSEMBLY.

8. ULTRASONICALLY EXAMINE THE FINAL DISSIMILAR METAL WELD TO THE ASME B&PV CODE SECTION III, NB-5000 AND SECTION XI, IWB-2500 REQUIREMENTS. THE OUTSIDE AND INSIDE GENERAL EXAMINATION SURFACE CONDITION FOR AT LEAST TWO TIMES THE THICKNESS PLUS 2 INCHES [50.8 mm] ON EITHER SIDE OF THE WELD IS TO BE 225 min [5.7 mm] Ra OR BETTER UNLESS OTHERWISE NOTED, AND SHALL BE FREE OF IRREGULARITIES, LOOSE MATERIAL, OR COATINGS WHICH MAY INTERFERE WITH THE ULTRASONIC WAVE TRANSMISSION. THE WELD CROWN SHALL BE FLUSH WITH THE SURROUNDING BASE MATERIAL, WHERE FLUSH IS DEFINED AS NO MORE THAN A 1/32 INCH [0.79 mm] GAP PER LINEAR INCH [25.4 mm] OF MATERIAL.

9. RADIOGRAPHIC TEST EXAMINE THE ENTIRE WELD TO ASME CODE SECTION 111, NB-5000 REQUIREMENTS.

10. DYE PENETRANT EXAMINE WELD BACKCHIP AND FINAL SURFACES OF DISSIMILAR METAL WELD PER ASME B&PV CODE SECTION III, NB-5200. ACCEPTANCE CRITERIA SHALL BE TO ASME B&PV CODE SECTION III, NB-5350.

11. FINAL SURFACE OF WELD BUILDUP SHALL BE MAGNETIC PARTICLE TESTED IN ACCORDANCE WITH ASME B&PV SECTION III, NB-5000

12. INTERGRANULAR CORROSION TEST PER ASTM-A262-02a (REAPPROVED) 2008 OR LATER PRACTICE E IS REQUIRED ON QUICKLOC INSTRUMENT NOZZLE STAINLESS STEEL MATERIAL.

13. EXAMINATION OF QUICKLOC INSTRUMENT NOZZLE SHALL BE PERFORMED IN ACCORDANCE WITH ASME B&PV CODE, SECTION III, NB-2551(C) AFTER ROUGH MACHINING AND BORING.

14. ALL THREADS SHALL BE VISUALLY EXAMINED FOR COMPLETE THREAD FORMATION AND SURFACE APPEARANCE. INSPECT THREAD PROFILE ACCEPTABILITY FOR FULL THREAD LENGTH WITH CERTIFIED GO, NO-GO RING GAGE PER ASME B1.3M SYSTEM 22 GAGING.

15. ALL FINAL MACHINED SURFACES OF THE QUICKLOC INSTRUMENT NOZZLE SHALL BE DYE PENETRANT EXAMINED PER ASME B&PV CODE, SECTION III, NB-4121.3 PRIOR TO CHROME PLATING THREADS. CHROME PLATE THREADS TO APP-GW-Z0-625 (CHROMIUM PLATING), CLASS 2, .0002 - .0006 INCH [.005 - .015 mm] THICK. DIMENSIONS SPECIFIED ARE AFTER PLATING.

16. THE DISSIMILAR METAL WELD ON THE QIN REQUIRES IN-SERVICE INSPECTIONS PER THE ASME BOILER AND PRESSURE VESSEL CODE, SECTION XI, DIVISION 1, ART IWB-2000, TABLE IWB-2500-1, ITEM NUMBER B5.10.

17. WELD BUILDUP SHALL BE ULTRASONICALLY EXAMINED FOR LACK OF FUSION AND LAMINAR DEFECTS IN ACCORDANCE WITH ASME B&PV CODE SECTION III, NB-5244(a). ACCEPTANCE CRITERIA SHALL BE TO ASME B&PV CODE SECTION III, NB-5331.

18. SURFACES TO BE CLAD OR BUTTERED SHALL BE MAGNETIC PARTICLE TESTED PRIOR TO THE CLADDING OR BUTTERING OPERATION IN ACCORDANCE WITH ASME B&PV CODE SECTION III, NB-5000.

19. ALL CLADDING SHALL BE .125 INCH MINIMUM THICK AND SHALL BE DYE PENATRANT EXAMINED AND MEET THE ASME B&PV CODE SECTION III, NB-5350 ACCEPTANCE CRITERIA.

A summary of the QuickLoc design will be added to DCD section 5.3.4.1 as shown in the markup below.

Design Control Document (DCD) Revision:

Revise DCD Section 5.3.4.1, "Design," as follows:

(4 paragraphs unchanged)

The closure head has a 77.5-inch inner spherical radius and a 188.0-inch O.D. outer flange. Cladding is extended across the bottom of the flange for refueling purposes. Forty-five, seven-inch diameter studs attach the head to the lower vessel and two metal o-rings are used for sealing. The upper head has sixty-nine 4-inch outer diameter penetrations for the control rod drive mechanism housings and eight penetrations for the incore instrumentation tubes.

The eight penetrations for the incore instrumentation tubes are QuickLoc instrument nozzles which are welded to the reactor vessel head. Up to six instrument thimble assemblies pass through each QuickLoc instrument nozzle. The reactor vessel head penetration diameter is approximately 4.75 inches to the cladding. The material of the pressure boundary parts of the QuickLoc are SA-479 – Type 304, Type 316, and UNS S21800. The QuickLoc instrument nozzle is welded to the Ni-Cr-Fe buttering on the weld buildup on the reactor vessel closure head. The QuickLoc provides two pressure boundaries: 1) between the QuickLoc plug and the incore instrument thimble assemblies (this pressure boundary is only disassembled when the instrument thimble is replaced) and 2) between the QuickLoc plug and the instrument nozzle (this pressure boundary is disassembled when the reactor vessel closure head is removed). The QuickLoc instrument nozzle pressure boundary parts are designed and fabricated to the requirements of the ASME Code, Section III Division 1, Subsection NB. The QuickLoc internal, non pressure boundary, parts are designed to Subsection NG. The QuickLoc assembly is a proven design that was first installed in an operating plant in 1995. Since then they have been installed on four additional operating plants.

The vessel is manufactured from low alloy steel plates and forgings to minimize size. The chemical content of the core region base material is specifically controlled. A surveillance program is used to monitor the radiation damage to the vessel material.

The four vessel supports are located beneath the inlet nozzles and the internals support ledge is machined into the top of the upper shell. The top of the upper shell contains the stud holes and has the sealing surface for the closure head. Inner and outer monitor tubes are provided through the shell to collect any leakage past the closure region o-rings.

PRA Revision: None.

Technical Report (TR) Revision: None.