John D. O'Toole
Vice President

Consolidated Edison Company of New York, Inc.
4 Irving Place, New York, NY 10003
Telephone (212) 460-2533

May 12, 1981

Re: Indian Point Unit No. 2
Docket No. 50-247

RECEIVED
MAY 19 1981
U.S. NUCLEAR REGULATORY COMMISSION

Director of Nuclear Reactor Regulation
U. S. Nuclear Regulatory Commission
Washington, D. C. 20555

ATTN: Mr. Darrell G. Eisenhut, Director
Division of Licensing

Dear Mr. Eisenhut:

By letter dated February 26, 1981, we provided our response to NUREG-0737 "Clarification of TMI Action Plan Requirements" for Indian Point Unit No. 2. For your ready reference, please find attached the documentation which we committed to providing prior to returning the unit to service from the present refueling/maintenance outage. In addition, we have been able to expedite the completion of our review for Item II.K.3.17 such that a response to this Item is included in the Attachment to this letter.

Should you or your staff have any questions, please contact us.

Very truly yours,

John D. O'Toole

attach.

A046
S
1/1

8105200204

P

ATTACHMENT

I.A.1.3 SHIFT MANNING

The required plant administrative procedures governing the use of overtime work hours for plant staff members have been implemented and are available for NRC review.

II.B.2 DESIGN REVIEW OF PLANT SHIELDING AND ENVIRONMENTAL QUALIFICATION OF EQUIPMENT FOR SPACES/SYSTEMS WHICH MAY BE USED IN POSTACCIDENT OPERATIONS

The environmental qualification information on all items implemented during the present refueling/maintenance outage will be submitted to the NRC under separate cover. The final design details regarding our implementation of this Task are available for NRC review.

II.B.3 POST ACCIDENT SAMPLING CAPABILITY

The final design details regarding our implementation of this Task are available for NRC review.

II.B.4 TRAINING FOR MITIGATING CORE DAMAGE

As required by this Task, the training program was initiated by April 1, 1981.

II.E.1.1 AUXILIARY FEEDWATER SYSTEM EVALUATION

The installation of the AFW pump steam turbine missile shield has been completed.

II.F.1 ADDITIONAL ACCIDENT-MONITORING INSTRUMENTATION:

ATTACHMENT 1: NOBLE GAS EFFLUENT MONITOR

The final design details are available for NRC review.

ATTACHMENT 2: SAMPLING AND ANALYSIS OF PLANT EFFLUENTS

The details of our compliance with this Task Item are available for NRC review.

ATTACHMENT 5: CONTAINMENT WATER LEVEL MONITOR

The arrangement of the continuous water level monitors for the Indian Point Unit No. 2 Containment Building is as follows:

(1) One Barton "Lot 4" level transmitter in the recirculation sump. The span is 0-18 ft (Elevation 34'-10 7/8" to 52'-10 7/8").

(2) One Barton "Lot 4" level transmitter in the containment sump. The span is 0-18 ft (Elevation 38'-9" to 56'-9").

(3) One Barton "Lot 4" level transmitter in the reactor cavity pit. The span is 0-18 ft. (Elevation 20'-0" to 38'-0").

Systems (1) and (2) redundantly cover the narrow and wide range requirements. System (3) covers the bottom most area of the Containment Building and overlaps the range of System (1). These systems will provide level

measurement indications with an accuracy of ± 2 inches which represents a maximum error band of ±1%.

As required, the above systems provide indication for a water volume of at least 600,000 gallons even though past Indian Point No. 2 studies have indicated that it is highly improbable that such a volume will collect in containment post-LOCA. A 600,000 gallon water volume would reach approximately Elevation 52'-3", a level which is redundantly sensed by both systems (1) and (2).

These transmitters and indication systems meet the design and environmental qualification requirements of Regulatory Guide 1.89 and Appendix B of NUREG-0737.

II.K.3.1 INSTALLATION AND TESTING OF AUTOMATIC POWER-OPERATED RELIEF VALVE ISOLATION SYSTEM

II.K.3.2 REPORT ON OVERALL SAFETY EFFECT OF POWER-OPERATED RELIEF VALVE ISOLATION SYSTEM

The Westinghouse Owner's Group report, which addresses the NRC concern of Items II.K.3.1 and II.K.3.2, was submitted to Mr. James Miller of the NRC on March 13, 1981. This report addresses this issue on a generic basis for all Westinghouse plants and the information and conclusions in that report are applicable to Indian Point Unit No. 2.

As indicated in that report, there has been a significant reduction in the probability of PORV LOCAs due to post-TMI modifications. Also noted in that report is that both prior to and following post-TMI modifications, PORV LOCAs are not significant contributors to the overall probability of a small break LOCA. Based on the above, the Westinghouse report states that further evaluation of an automatic block valve closure system is unnecessary.

Accordingly, Con Edison is not planning to provide an automatic isolation system for the PORV block valves, and we consider our response to II.K.3.1 and II.K.3.2 to be complete.

II.K.3.17 REPORT ON OUTAGES OF EMERGENCY CORE-COOLING SYSTEMS LICENSEE REPORT AND PROPOSED TECHNICAL SPECIFICATION CHANGES

The required detailed report on ECC equipment outages is presented in Enclosure 1 to this Attachment. Based on the data presented therein, no changes to the existing technical specifications are deemed necessary.

III.D.3.4 CONTROL ROOM HABITABILITY REQUIREMENTS

The analysis of the effect of an accidental release of radioactive gases on the Indian Point Unit No. 2 control room and toxic chemical data are presented in Enclosure 2 to this attachment. The analysis of the toxic chemical data is ongoing and should

any modifications be deemed necessary they will be implemented, as required, by January 1, 1983. Description of any such modifications will be submitted to the NRC following completion of design details.

Enclosure 1

ECC Equipment Outage Report
(NUREG-0737, Item II.K.3.17)

Consolidated Edison Company of New York, Inc.
Indian Point Unit No. 2
Docket No. 50-247
May, 1981

Item II.K.3.17-ECC Equipment Outages Report

As described in Con Edison's February 26, 1981 submittal, equipment outage data at Indian Point Unit No. 2 from January 1977 through June 1980 (i.e., almost 3 cycles of reactor operation) has been collected and is being factored into the probabilistic risk assessment (PRA) study being performed by our consultant (Pickard, Lowe & Garrick, Inc.). In order to respond to Item II.K.3.17 of NUREG-0737, we have excerpted the applicable information from that data base.

The data base included all outages of ECC equipment which occurred during noncold shutdown periods over the forementioned report period since it is during noncold shutdown periods that ECC equipment reliability would be of interest. The applicable information for ECC equipment including diesel generators is provided below. The categories utilized in the presentation of the maintenance outage data are defined as follows:

- Reporting hours: the total number of noncold shutdown calendar hours in the given year for which maintenance data was available (may be less than the total number of noncold shutdown hours due to missing or otherwise unavailable records).
- Component hours: the total number of noncold shutdown component service hours in the reporting period (obtained from the product of the reporting hours and the number of components available for the given type being analyzed).
- Maintenance events: the number of individual maintenance events performed on the given component type during the reporting period.
- Total maintenance hours: the total duration of the maintenance events performed during the reporting period.

1. COMPONENT TYPE: SAFETY INJECTION PUMPS

(a) Maintenance Outage Data:

Year	Reporting Hours	Component Hours	Maintenance Events	Total Maintenance Hours
1977	5,520	16,560	0	0
1978	3,912	11,736	5	98.75*
1979	5,832	17,496	1	2
1980	2,568	7,704	0	0

*Includes one event of 78.5 hrs.

(b) Test Outage Data:

The three safety injection pumps are each tested monthly on recirculation flow. Since the safety injection system remains in its normal configuration during these tests, there is no contribution to system unavailability. However, during quarterly inservice valve exercising tests, safety injection pump no. 22 will be isolated for approximately 15 minutes while its motor operated suction and discharge valves are being tested. The operability of safety injection pumps 21 and 23 is unaffected by valve exercising tests.

2. COMPONENT TYPE: RESIDUAL HEAT REMOVAL PUMPS

(a) Maintenance Outage Data:

Year	Reporting Hours	Component Hours	Maintenance Events	Total Maintenance Hours
1977	5,520	11,040	1	16
1978	3,912	7,824	2	20
1979	5,832	11,664	0	0
1980	2,568	5,136	0	0

(b) Test Outage Data:

Monthly recirculation flow testing of the two residual heat removal pumps is performed with the system remaining in its normal configuration and, therefore, presents no contribution to system unavailability. Furthermore, quarterly inservice valve exercising test do not affect the availability of the system.

3. COMPONENT TYPE: DIESEL GENERATORS

(a) Maintenance Outage Data:

Year	Reporting Hours	Component Hours	Maintenance Events	Total Maintenance Hours
1977	5,520	16,560	15	471
1978	3,912	11,736	9	164
1979	5,832	17,496	22	714
1980	2,568	7,704	7	184

(b) Test Outage Data:

During the monthly testing of the three diesel generators, they are started from the local control panel in the diesel generator building and operated under load. Since the diesel generator is running and powering its bus and is attended by an operator throughout the duration of the test, it remains available for emergency service and dose not present a contribution to system unavailability.

Enclosure 2

Control Room Habitability Studies
(NUREG-0737, Item III.D.3.4)

Consolidated Edison Company of New York, Inc.
Indian Point Unit No. 2
Docket No. 50-247
May, 1981

TABLE OF CONTENTS

		Page
I.	General Introduction	1
II.	General Description of the Control Room	1
III.	Control Room HVAC Mode of Operation	2
IV.	Control Room Ventilation - Filtration Model	2
	Appendix A - Radiological Impact	A1
	Appendix B - Toxic Chemical Impact	B1

LIST OF FIGURES

Figure	Title	Page
1	Control Room Proximity to Hazardous Chemicals and Radiation Releases	3
2	Control Room Ventilation System Schematic with Normal and Incident Flow Diagram	4
3	Control Room Ventilation-Filtration Configuration	5

LIST OF TABLES

Table	Title
A1	Data Used to Calculate the Doses to Control Room Personnel Following a LOCA
A2	Time-Integrated Activity Concentration Outside Control Room Due to Containment Leakage
A3	Time-Integrated Activity Concentration Outside Control Room Due to Engineered Safety Features Leakage
A4	Time-Integrated Activity Concentration Inside Control Room Due to Containment Leakage
A5	Time-Integrated Activity Concentration Inside Control Room Due to Engineered Safety Features Leakage
A6	Containment Air Source Strengths at Various Times Following a LOCA
A7	Containment Sump and Recirculation Piping Outside Containment Source Strengths at Various Times Following a LOCA
A8	Radiation Doses in the Control Room Integrated Over 30 Days After LOCA
B1	Location of Facilities Contacted and Quantities of Hazardous Materials within Five-Mile Radius of Indian Point
B2	Mobile Sources of Toxic Chemicals within Five-Mile Radius of Indian Point
B3	Summary of Quantity, Distance and Chemical Properties of Toxic Materials

I. GENERAL INTRODUCTION

This study has been performed to evaluate the systems and structures pertaining to the habitability of control room in accordance with NUREG-0737 "TMI Action Plan Requirements" item III.D.3.4, to assure that control room operators will be adequately protected against the effects of accidental releases of toxic and radioactive gases and that the plant can be safely operated or shut down under design basis accident conditions (Criterion 19, "Control Room" of Appendix A, "General Design Criteria for Nuclear Power Plants" to 10 CFR Part 50).

II. GENERAL DESCRIPTION OF THE CONTROL ROOM

The control room area is located at the 53'-0" elevation of the Control Building and is enveloped by a concrete floor, a built-up roof (concrete for Unit-1 and steel for Unit-2) and steel walls. The closest distance between the Containment Building and the makeup air intake is approximately 170 feet. The control room contains the Flight and Supervisory Panels, Communication Center, Pantry and Toilet and Locker Room areas required for operation of the plant systems in the event of an emergency condition.

The ceiling over the Unit-1 section of the shared control room is of poured concrete construction of 5 inches thickness with three rectangular duct penetrations of 26" x 13", 40" x 16", and 20" x 24" through the Unit-1 concrete ceiling. The roof over the Unit-2 section consists of several layers of roofing and insulating materials. Additional shielding is provided by a slab of 3/8" thick steel armor plate installed for security reasons. There are two round roof-drain penetrations and a cluster of five conduits and pipe sleeves in a cricket of 1'-9" x 1'-5" overall dimensions. The North wall is covered by several layers of material, of which the most significant with respect to shielding is a 1/4" thick steel armor plate. There are no wall penetrations at the control room elevation. The East wall of the Unit-1 section is formed by partitions which wall off two small rooms and a corridor. The exterior wall is a sandwich of insulation and sheet metal. There are no wall penetrations at control room elevation. The West wall of the Unit 1 section abuts the Unit-1 turbine-generator building, and the West wall of the Unit 2 section abuts the Unit 2 turbine building. The walls are formed by a series of partitions which form several small rooms. There is no West exterior wall belonging to the control rooms proper. The south wall belongs to the Unit 1 section. It abuts the superheater building.

The makeup outside air intake (20" x 18") for the control room air conditioning system is located in the North wall of the Control Building between elevations 72'-0" and 88'-6". This intake is protected by a 90° hood with 1/2" mesh screen and a fixed louver mounted in a wall frame.

There are eight (8) sets of self-contained breathing apparatus in the control room with ten (10) additional air bottles of 1/2 hour capacity each. In addition, a minimum of forty-two (42) backup cylinders of air (containing 250 cubic feet at 2000 psig each) are also available for filling the self-contained apparatus.

There is no emergency storage of food and water in the control room. There are 1400 doses of potassium iodide thyroid blocking agent normally maintained in the control room.

Three to five persons are on duty in the control room under normal conditions. A minimum of four persons are in the control room under emergency conditions and two additional persons will be present on a part-time basis.

An isometric drawing depicting the relative locations of Containment Building, Control Room and chemical storage is shown in Figure 1.

III. CONTROL ROOM HVAC MODE OF OPERATION

A. Normal Operations

The Unit 1 and Unit 2 air conditioning systems will operate in parallel to supply cooling or heating as required to maintain room set temperature. Approximately 10% (920 cfm) of the circulated air from the Unit 2 system is fresh outside air makeup. All circulated air will bypass the charcoal filter unit.

B. Incident Operations

Upon a Safety Injection signal or high radiation signal from the control room area monitor, the Unit 2 system will automatically be placed in the incident mode of operation. (Automatic actuation of this operating mode will cause the Unit 1 control room ventilation system to go into 100% air recirculation operation.) The pneumatic dampers will be positioned to close both the outside air makeup and building air makeup ducts. The balancing dampers will be positioned and one of the filter unit booster fans (No. 21) will start to direct approximately 1840 cfm through the charcoal filter unit to remove air borne particulate radioactivity that may enter the control room through infiltration. In the event that the first booster fan fails to start, the second booster fan (No. 22) will start after a predetermined ten (10) second time delay. A detailed schematic flow diagram is shown on Figure 2.

IV. CONTROL ROOM VENTILATION FILTRATION MODEL

In order to calculate the activity concentration inside the control room due to containment and Engineered Safety Features (ESF) leakage after a Loss-of-Coolant-Accident, a ventilation-filtration model (Figure 3) is drawn based on the guidelines from "Nuclear Power Plant Control Room Ventilation System Design for Meeting General Design Criterion 19", 13th AEC Air Cleaning Conference, August 1974. The Iodine Protection Factor (IPF) from this model has been calculated and is 12.1.

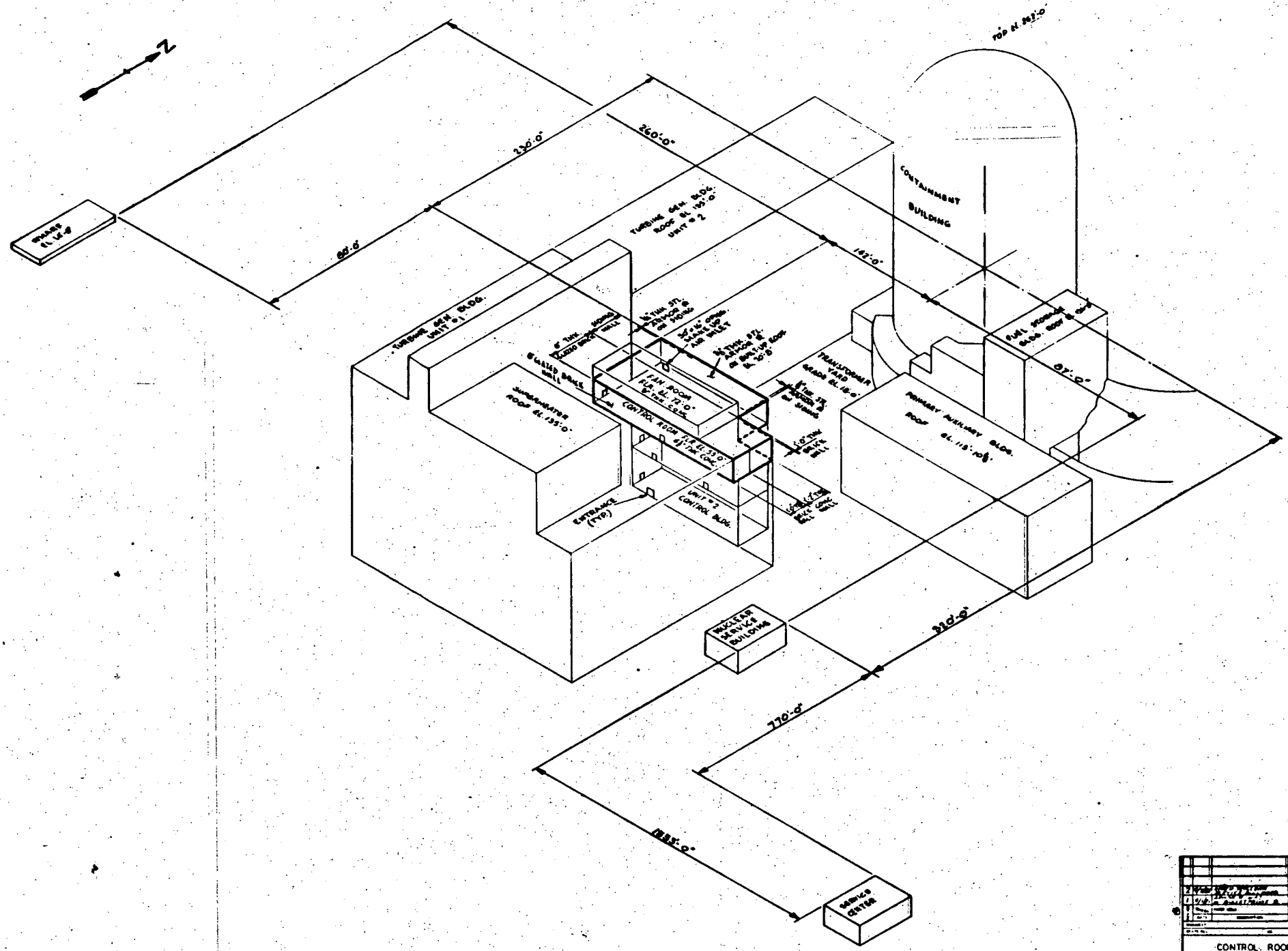

FIGURE 1

CONSOLIDATED EDISON COMPANY
INDIAN POINT GENERATING STATION
UNIT NO 2

CONTROL ROOM
PROXIMITY TO
HAZARDOUS CHEMICALS
& RADIATION RELEASES

7302-102-F-1

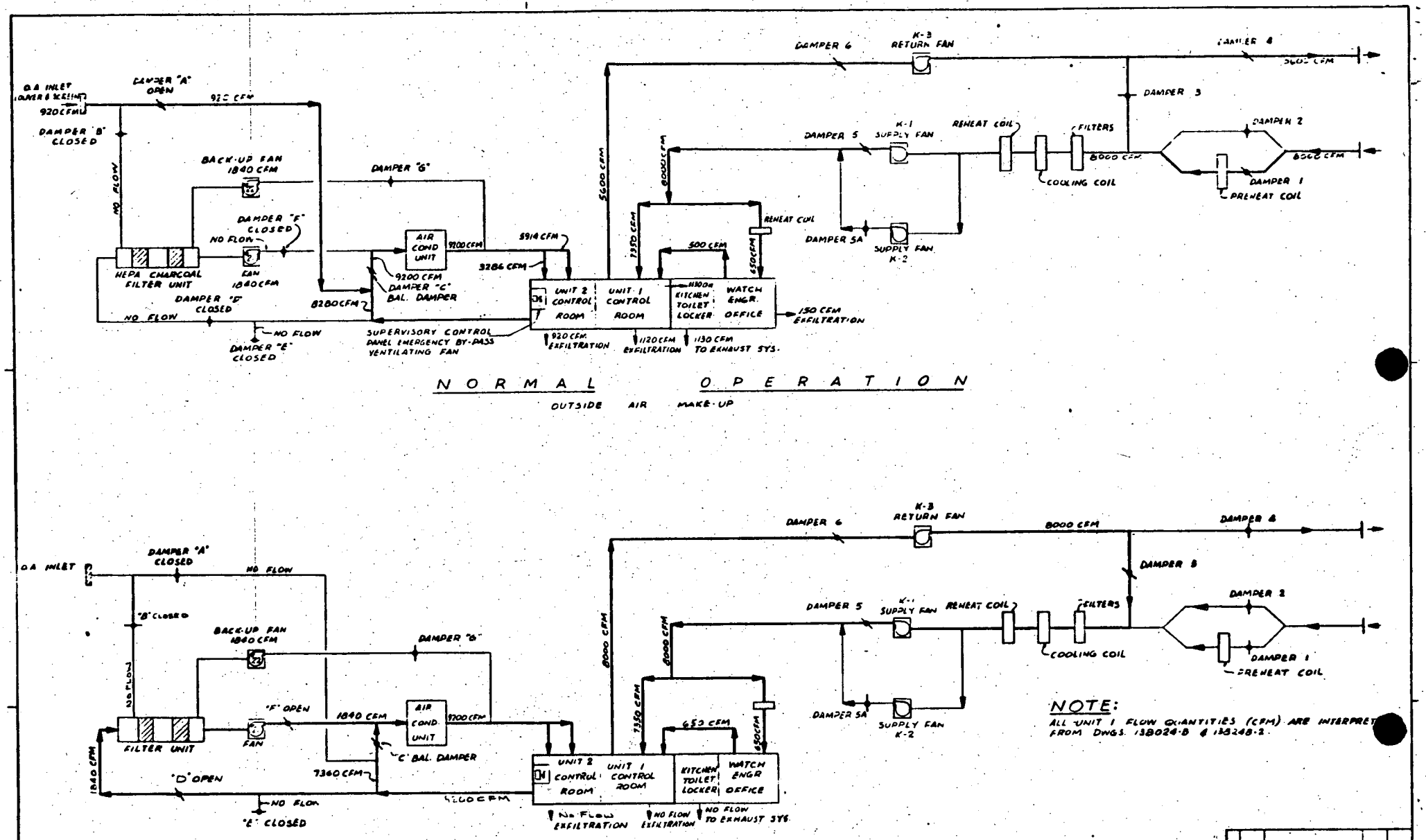
O.A. INLET DAMPER & SCREEN
920 CFM
DAMPER "A" OPEN
920 CFM
DAMPER "B" CLOSED
NO FLOW
BACK-UP FAN 1840 CFM
DAMPER "F" CLOSED
NO FLOW
HEPA CHARCOAL FILTER UNIT
FAN 1840 CFM
DAMPER "D" CLOSED
NO FLOW
NO FLOW
DAMPER "E" CLOSED
DAMPER "G"
AIR COND UNIT
9200 CFM
9200 CFM
DAMPER "C" BAL. DAMPER
8280 CFM
SUPERVISORY CONTROL PANEL EMERGENCY BY-PASS VENTILATING FAN
5914 CFM
3286 CFM
5600 CFM
8000 CFM
7350 CFM
500 CFM
650 CFM
REHEAT COIL
UNIT 2 CONTROL ROOM
UNIT 1 CONTROL ROOM
KITCHEN TOILET LOCKER
WATCH ENGR. OFFICE
150 CFM EXFILTRATION
920 CFM EXFILTRATION
1120 CFM EXFILTRATION
130 CFM TO EXHAUST SYS.
DAMPER 6
K-3 RETURN FAN
DAMPER 4
DAMPER 3
DAMPER 5
K-1 SUPPLY FAN
REHEAT COIL
FILTERS
DAMPER 2
8000 CFM
COOLING COIL
DAMPER 1
PREHEAT COIL
DAMPER 5A
SUPPLY FAN K-2
NORMAL OPERATION
OUTSIDE AIR MAKE-UP
O.A. INLET
DAMPER "A" CLOSED
NO FLOW
"B" CLOSED
BACK-UP FAN 1840 CFM
DAMPER "G"
NO FLOW
FILTER UNIT
FAN
"F" OPEN
1840 CFM
AIR COND. UNIT
9200 CFM
"C" BAL. DAMPER
1840 CFM
"D" OPEN
7360 CFM
NO FLOW
"E" CLOSED
9200 CFM
8000 CFM
7350 CFM
653 CFM
650 CFM
UNIT 2 CONTROL ROOM
UNIT 1 CONTROL ROOM
KITCHEN TOILET LOCKER
WATCH ENGR OFFICE
NO FLOW EXFILTRATION
NO FLOW EXFILTRATION
NO FLOW TO EXHAUST SYS.
DAMPER 6
K-3 RETURN FAN
8000 CFM
DAMPER 4
DAMPER 3
DAMPER 5
K-1 SUPPLY FAN
REHEAT COIL
FILTERS
DAMPER 2
COOLING COIL
DAMPER 1
PREHEAT COIL
DAMPER 5A
SUPPLY FAN K-2
NOTE:
ALL UNIT 1 FLOW QUANTITIES (CFM) ARE INTERPRETED FROM DWGS. 138024-B & 138248-2.
INCIDENT - 100% RETURN AIR (20% FILTERED)
CONTROL ROOM VENTILATION SYS. SCHEMATIC NORMAL & INCIDENT AIR FLOW DIAGRAM
united engineers
7302-102-D-2

FIGURE 2

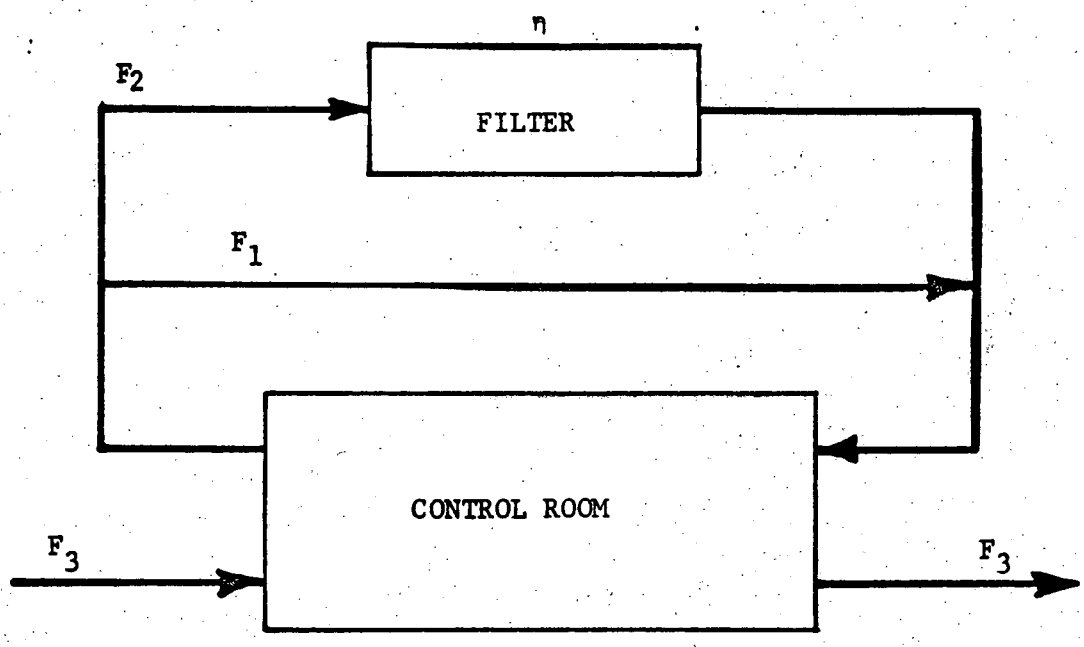

F_1 = 7360 cfm; rate of unfiltered air recirculation

F_2 = 1840 cfm; rate of filtered air recirculation

F_3 = 164 cfm; rate of unfiltered outside air infiltration

η = 99 % charcoal filter efficiency

CON-EDISON's CONTROL ROOM VENTILATION, FILTRATION CONFIGURATION

(CONTROL ROOM INCIDENT CONDITION, WITH 100 % RETURN AIR, 20 % FILTERED)

FIGURE 3

APPENDIX A OF CONTROL ROOM HABITABILITY STUDY

RADIOLOGICAL IMPACT

A. Method of Analysis

Radiation doses in the control room are calculated based on the data in Table A1 and sources from the following areas;

1. Direct radiation from airborne radioactivity outside control room through plume release due to containment leakage (Table A2).

2. Direct radiation from airborne radioactivity outside control room through plume release due to Engineered Safety Features (ESF) leakage (Table A3).

3. Airborne radioactivity inside control room from makeup air intake due to containment leakage (Table A4).

4. Airborne radioactivity inside control room from makeup air intake due to Engineered Safety Features (ESF) leakage (Table A5).

5. Direct radiation from containment air (Table A6).

6. Direct radiation from containment sump water and recirculation piping outside containment (Table A7).

A QAD-CYL computer code is used to calculate the direct doses in the control room due to direct radiation and plume release from various sources. Doses due to activity inside the control rooms are also evaluated by using the semi-infinite uniform cloud model appearing in Reg. Guide 1.4. The doses are calculated from this model by the use of the following equations.

1. Beta Skin Doses

$$_{\beta}D_{\infty} = (8.28 \times 10^{2})\ (OF)\ \overline{E}_{\beta} \int_{t_1}^{t_2} C_{IC}(t)dt$$

2. Gamma Whole Body Doses

$$_{\gamma}D_{\infty} = (OF)\ (GF)^{-1}\ (9.0 \times 10^{2})\ \overline{E}_{\gamma} \int_{t_1}^{t_2} C_{IC}(t)dt$$

3. Thyroid Doses

$$_{th}D = \sum_{t} \{ (OF)\ (IDF)\ (BR) \int_{t_1}^{t_2} C_{IC}(t)dt \}$$

Where ${}_{\beta}D_{\infty}$, ${}_{\gamma}D_{\infty}$, ${}_{th}D$ = time-integrated beta skin, gamma whole body, and thyroid doses in the Control Room (Rem)

OF = Occupancy Factor for control room personnel

$\overline{E}_{\beta}$ = Average beta energy per disintegration (Mev/dis)

$\overline{E}_{\gamma}$ = Average gamma energy per disintegration (Mev/dis)

GF = $\frac{1173}{V^{0.338}}$ Geometry Factor

V = Control Room air free volume (ft^3)

IDF = Iodine Dose Factor (Rem/Ci)

BR = Breathing Rate (M^3/sec)

$\int_{t_1}^{t_2} C_{IC}(t)dt$ = Time integrated activity concentration inside the control room $\{\frac{\mu Ci}{cc} - hr\}$

t = Time (hour)

B. Results of Analysis

Radiation doses in the control room integrated over 30 days after LOCA are summarized and tabulated on Table A8. Results show that the gamma whole body, beta skin and thyroid doses in the control room are well below the dose guidelines from Standard Review Plan 6.4.

Radiation streaming into some local areas of the control room due to ventilation duct penetrations at the 72'-0" elevation has also been examined. The resultant gamma whole body dose is also within the acceptable limit.

The results demonstrate that IP-2 satisfies the requirements of General Design Criterion 19 of 10 CFR part 50, Appendix A.

C. Summary and Conclusions

Calculation results (Table A8) show that a thyroid dose of 10.8 rems may be expected in the control room over a 30-day period after LOCA. The results are based on the following two assumptions:

1. A 99% iodine removal efficiency for the charcoal filter is used based on tests performed by BAHCO Systems Inc. (Formerly Air Quality Testing and Design Inc.) for Con-Edison.

2. No filter efficiency is assumed as far as iodine release from the Plant Vent.

As described in Paragraph B above the gamma whole body, beta skin and thyroid doses in the control room are well below the dose guidelines from Standard Review Plan 6.4.

TABLE A1

DATA USED TO CALCULATE THE DOSES TO CONTROL ROOM PERSONNEL FOLLOWING A LOCA

License power level	2758 MW_t
Fraction of core released to Containment	
Noble gases	100%
Halogens	50%
Fraction of halogen release plated out on containment surfaces	50%
Fraction of airborne halogens in:	
Elemental form	91%
Methyl form	4%
Particulate form	5%
Containment free volume	2.61×10^6 ft^3
Iodines removal via containment spray 0-24 hrs.	
Elemental form	9.83 hr^{-1}
Methyl form	0 hr^{-1}
Particulate form	0.45 hr^{-1}
1-30 days	not considered
Containment Ventilation/Filtration System	
Ventilation system flow rate per unit	8,000 cfm
Number of units assumed operating	3 of 5
Filter efficiencies	
Elemental form	90%
Methyl form	30%
Particulate form	90%
Containment leak rate	
0-24 hrs	0.1%/day ($4.167 \times 10^{-5} hr.^{-1}$)
1-30 days	0.05%/day ($2.083 \times 10^{-5} hr.^{-1}$)

TABLE A1(cont.)

Control Room free air volume	103,400 ft^3	
Control Room ventilation system incident mode of operation		
Filtered room air recirculation	1840 cfm	
Unfiltered room air recirculation for Unit 2	7360 cfm	
Unfiltered room air recirculation for Unit 1	8000 cfm	
Unfiltered outside air infiltration	164 cfm	
Charcoal filter efficiency	99%	
Control Room Occupancy Factor	0-1 day	1
	1-4 days	0.6
	4-30 days	0.4
X/Q to Control Room ($\frac{sec}{m^3}$)	0-2 hrs.	5.2×10^{-4}
	2-24 hrs.	2.6×10^{-4}
	1-30 days	2.6×10^{-4}
Breathing rate (m^3/sec)	3.47×10^{-4}	
Core activities (curie)		
	Kr-85m	3.06+7
	Kr-85	1.49+6
	Kr-87	5.87+7
	Kr-88	8.35+7
	I-131	6.92+7
	I-132	1.05+8
	I-133	1.55+8
	Xe-133m	3.97+7
	Xe-133	1.57+8
	I-134	1.816+8
	I-134	1.407+8
	Xe-135m	2.32+7
	Xe-135	4.24+7

TABLE A2

TIME-INTEGRATED ACTIVITY CONCENTRATION OUTSIDE CONTROL ROOM DUE TO CONTAINMENT LEAKAGE (μCi/cc) -HR

Isotope	0-2 hr	2-8 hr	8-24 hr	1-4 days	4-30 days
Kr-85m	3.16-4	2.58-4	1.50-4	6.20-6	0
Kr-85	1.80-5	2.70-5	7.17-5	1.61-4	1.39-3
Kr-87	4.34-4	1.10-4	4.32-6	0	0
Kr-88	7.91-4	4.71-4	1.36-4	0	0
Xe-133m	4.71-4	6.75-4	1.58-3	2.12-3	1.44-3
Xe-133	1.89-3	2.81-3	7.31-3	1.40-2	3.06-2
Xe-135m	2.75-4	3.66-4	5.55-4	1.24-4	0
Xe-135	5.31-4	8.53-4	1.84-3	7.26-4	6.20-6
I-131	2.09-5	6.01-6	2.97-6	6.20-8	0
I-132	2.75-5	2.79-6	1.86-7	0	0
I-133	4.61-5	1.18-5	4.63-6	6.20-8	0
I-134	3.96-5	9.91-7	0	0	0
I-135	4.05-5	7.99-6	1.86-6	0	0

TABLE A3

TIME INTEGRATED ACTIVITY CONCENTRATION OUTSIDE CONTROL ROOM
DUE TO ENGINEERED SAFETY FEATURES LEAKAGE (μ Ci/cc) -HR

Isotope	30 min - 2 hr	2-8 hr	8-24 hr	24 hr - 4 day	4-30 day
I-131	4.54-7	8.92-7	2.29-6	8.88-6	2.68-5
I-132	4.81-7	3.57-7	7.14-8	6.20-10	--
I-133	9.79-7	1.74-6	3.24-6	4.22-6	4.30-7
I-134	4.69-7	1.02-7	8.92-10	--	--
I-135	8.16-7	1.13-6	1.08-6	2.61-7	1.69-10

TABLE A4

TIME INTEGRATED ACTIVITY CONCENTRATION INSIDE CONTROL ROOM DUE TO CONTAINMENT LEAKAGE (μCi/cc) -HR

Isotope	0-2 hr	2-8 hr	8-24 hr	1-4 days	4-30 days
Kr-85m	3.16-4	2.58-4	1.50-4	6.20-6	0
Kr-85	1.80-5	2.70-5	7.17-5	1.61-4	1.39-3
Kr-87	4.34-4	1.10-4	4.32-6	0	0
Kr-88	7.91-4	4.71-4	1.36-4	0	0
Xe-133m	4.71-4	6.75-4	1.58-3	2.12-3	1.44-3
Xe-133	1.89-3	2.81-3	7.31-3	1.40-2	3.06-2
Xe-135m	2.75-4	3.66-4	5.55-4	1.24-4	0
Xe-135	5.31-4	8.53-4	1.84-3	7.26-4	6.20-6
I-131	1.73-6	4.97-7	2.45-7	5.12-9	0
I-132	2.27-6	2.31-7	1.54-8	0	0
I-133	3.81-6	9.75-7	3.83-7	5.12-9	0
I-134	3.27-6	8.19-8	0	0	0
I-135	3.35-6	6.60-7	1.54-7	0	0

TABLE A5

TIME INTEGRATED ACTIVITY CONCENTRATION OUTSIDE CONTROL ROOM DUE TO ENGINEERED SAFETY FEATURES LEAKAGE (μCi/cc) -HR

Isotope	30 min- 2 hr	2-8 hr	8-24 hr	24 hr - 4 day	4-30 day
I-131	3.75-8	7.37-8	1.89-7	7.34-7	2.21-6
I-132	3.98-8	2.95-8	5.90-9	5.12-11	--
I-133	8.09-8	1.44-7	2.68-7	3.49-7	3.55-8
I-134	3.88-8	8.43-9	7.37-11	--	--
I-135	6.74-8	9.34-8	8.93-8	2.16-8	1.40-11

TABLE A6

CONTAINMENT AIR SOURCE STRENGTH AT VARIOUS TIMES FOLLOWING A LOCA (TID-14833 RELEASE FRACTION)

SOURCE STRENGTH (Ci)

Isotope	0	2 Hrs.	8 Hrs.	24 Hrs.	4 Days	30 Days
Kr-85m	3.06+7	2.23+7	8.58+6	6.73+5	7.18	0
Kr-85	1.49+6	1.49+6	1.49+6	1.49+6	1.48+6	1.46+6
Kr-87	5.87+7	2.02+7	8.26+5	1.63+2	0	0
Kr-88	8.35+7	5.07+7	1.13+7	2.07+5	4.00-3	0
Xe-133m	3.97+7	3.88+7	3.60+7	2.97+7	1.21+7	4.62+3
Xe-133	1.57+8	1.57+8	1.55+8	1.48+8	1.10+8	3.90+6
Xe-135m	2.32+7	2.25+7	1.78+7	6.41+6	1.23+4	0
Xe-135	4.24+7	4.59+7	4.72+7	2.77+7	2.72+5	0
I-131	1.73+7	6.23+5	1.79+5	1.19+4	6.17-2	0
I-132	2.62+7	5.27+5	2.61+4	1.59+1	0	0
I-133	3.88+7	1.32+6	3.18+5	1.32+4	8.13-3	0
I-134	4.54+7	3.38+5	8.58+2	1.90-4	0	0
I-135	3.52+7	1.04+6	1.66+5	2.29+3	9.86-6	0

TABLE A7

CONTAINMENT SUMP AND RECIRCULATION PIPING OUTSIDE CONTAINMENT SOURCE STRENGTHS AT VARIOUS TIMES FOLLOWING LOCA (TID-14844 RELEASE FRACTION)

SOURCE STRENGTH (MeV/cc-sec)

E_γ, MeV	0	0.5 Hr.	2.0 Hrs.	8.0 Hrs.	1 Day	7 Days	30 Days
0.2-0.4	3.12+09	1.09+09	8.76+08	7.59+08	5.65+08	2.34+08	2.92+07
0.4-0.9	1.17+10	7.79+09	4.28+09	1.64+09	7.98+08	1.50+08	7.01+07
0.9-1.35	7.01+09	3.31+09	1.95+09	8.57+08	1.95+08	8.76+06	2.34+06
1.35-1.8	6.82+09	3.31+09	1.73+09	6.04+08	1.48+08	4.48+07	1.29+07
1.8-2.2	2.92+09	1.69+09	9.93+08	2.34+08	1.25+07	1.79+06	7.20+05
2.2-2.6	3.31+09	2.14+09	1.19+09	2.53+08	1.31+07	2.73+06	7.79+05
2.6-3.0	1.58+09	2.53+08	1.17+08	1.67+07	3.70+05	4.67+04	1.34+04
3.0-4.0	1.11+09	1.44+08	4.87+07	7.01+06	1.48+05	1.83+04	5.26+03
4.0-5.0	8.18+08	6.23+06	5.06+06	0	0	0	0
5.0-6.0	3.70+06	4.67+04	0	0	0	0	0

TABLE A8

RADIATION DOSES IN THE CONTROL ROOM INTEGRATED OVER 30 DAYS AFTER LOCA

		Direct Radiation From		Containment Leakage		Engineered Safety Features Leakage			
	Dose Guidelines per S.R.P. 6.4	Containment Air	Containment Sump Water	Activity Inside Rm. from Makeup Air Intake	Activity Outside Rm. thru Plume Release	Activity Inside Rm. from Makeup Air Intake	Activity Outside Rm. thru Plume Release	Direct Radiation from Recirc. Pipes	Total
Control Room		(rem)	(rem)	(rem)	(rem)	(rem)	(rem)	(rem)	
a. Whole body gamma	5 rem	5×10^{-2}	6×10^{-2}	0.23	2.3	NIL	NIL	NIL	2.6 rem
b. Thyroid	30 rem	-	-	7.4	-	3.4	-	-	10.8 rem
c. Beta Skin	30 rem	-	-	7.1	-	NIL	-	-	7.1 rem

APPENDIX B OF CONTROL ROOM HABITABILITY STUDY

TOXIC CHEMICAL IMPACT

A. Identification of Potential Hazards

Stationary Sources, Off-site

A survey of the area within a five mile radius of Indian Point was made to identify all manufacturing, commercial, service and quarrying facilities that could conceivably use, store or produce hazardous materials in their normal operations.

A list of such facilities was derived from county records, the Dun & Bradstreet Reference Book, state and federal environmental agency permit files and field collected data (References 1 through 5). These facilities were contacted to establish the actual existance of hazardous material at the facility and the name and amount of such hazardous material. Table B1 is a list of the facilities that handle hazardous materials, the hazardous materials on hand at each facility and the location of the facility relative to the Indian Point site.

Stationary Sources, On-site

Water treatment systems located at the Indian Point site require certain chemicals which may release toxic gases if the containers in which they are stored are ruptured.

The chemicals which are stored on-site and the location and quantity of each are as follows:

Chemical	Location	Quantity
Ammonium Hydroxide	IP-2 Turbine Hall Bldg.	One 55 gallon drum
Hydrazine	IP-2 Turbine Hall Bldg.	Four 55 gallon drums
Hydrazine	IP-3 Turbine Hall Bldg.	Three 55 gallon drums
Sodium Hydroxide	IP-1 Nuclear Service Bldg.	One 500 gallon tank One 4200 gallon tank Two 5000 gallon tanks
Sodium Hydroxide	IP-3 Service Boiler Bldg.	One 6000 gallon tank
Sodium Hydroxide	IP-3 PAB	One 4000 gallon tank One 200 gallon tank

Stationary Sources, On-site (cont)

Chemical	Location	Quantity
Sulfuric Acid	IP-2 Turbine Hall Bldg.	One 500 gallon tank
Sulfuric Acid	IP-3 Service Boiler Bldg.	One 6000 gallon tank
Sulfuric Acid	IP-3 Turbine Hall Bldg.	One 500 gallon tank

Mobile Sources, Road & Rail

A survey of the area within a five mile radius of Indian Point was made to identify all shipping facilities which could handle hazardous materials.

New York Highway 9, the New York-Albany Post Road, is located approximately 2.27 miles to the East of the Indian Point site. Through truck traffic is not heavy on Route 9 since major North-South Interstate highways are available (Route I-684 to the East and Route I-87 to the West).[6] Traffic counts on Route 9 South of Peekskill average 17,500 vehicles/day. No information is available on what portion is truck traffic versus automobile and bus traffic.[7]

The Consolidated Railroad Corporation (CONRAIL) operates two separate rail lines near the Indian Point site.[8] One double track line parallels the East bank of the Hudson River and passes within 0.6 miles of the site. Another double track line parallels the West bank of the Hudson River and passes within 0.9 miles of the Indian Point site. Both rail lines handle freight including a variety of hazardous chemicals[9]. Regulatory Guide 1.78 defines 30 rail shipments per year as being "frequent", and therefore requiring analysis. Data obtained from CONRAIL has been evaluated and those hazardous chemicals which require analysis on the basis of frequent shipment are listed in Table B2. Since the average railcar capacity is larger than that of a truck and one rail line passes within the same distance as does Route 9, the rail traffic presents a greater potential hazard than truck traffic assuming shipment of the same materials.

Mobile Sources, Waterborne

The Indian Point site is located on the East Bank of the Hudson River, a major inland waterway accessible by both barge and ocean going vessels [10]. A survey of all major cargo shipped on the Hudson River between Spuyten Devil Creek and Waterford, N.Y. was made [11] to identify shipments of hazardous materials. Regulatory Guide 1.78 defines 50 barge shipments per year as being "frequent", and therfore requiring analysis. The barge traffic data has been evaluated and the only hazardous material that is shipped more than 50 times a year is liquid sodium hydroxide. The quantity shipped and distance to the barge is shown in Table B2.

B. Method of Analysis

The evaluation process used in this study can be briefly stated as follows. Data is assembled on all the hazardous chemicals within the 5 mile radius. Those chemicals which are infrequently shipped or are stored in insignificant quantities are eliminated from further consideration. The physical properties of the remaining chemicals are examined to determine if any can be eliminated from further consideration by virtue of their physical properties making it impossible to become a toxic gas. The chemicals which remain after this elimination process are analyzed for their effect on the control room operators. The analysis consists of a determination of the quantity of the chemical that can become airborne, calculation of the concentration at the control room air intake and concentration inside the control room. Finally, the calculated concentration is compared to the toxicity limit.

Table B3 lists all the hazardous chemicals found to exist in the 5 mile radius together with information regarding the quantity to be considered, the distance and direction from the control room to the location of the chemical, and certain relevant properties of the chemical. This table also indicates which chemicals are eliminated from further consideration and the reason for the elimination.

Significant Quantities

A determination of whether a storage area or shipping container, listed in Table B1, constitutes a hazard to the control room operators is made on the basis of the quantity of the chemical, the distance from the Control Room air intake, the in leakage characteristics of the Control Room and the applicable toxicity limits. The procedure for calculating the weight of each hazardous chemical necessary to be included in a consideration of Control Room habitability is given as follows;

$$W_{cr} = W_c \times \frac{TL}{50\ mg/_{m^3}} \times \frac{1.2}{E_{air}} \qquad (1)$$

Where W_{cr} = Weight of hazardous chemicals that require consideration in the evaluation of Control Room habitability study. (lb)

W_c = Weight of hazardous chemicals for type C Control Room at specific distance. Refer to Table C-2 of Regulatory Guide 1.78. (lb)

TL = Toxicity limit for specific chemicals per Table C-1 of Regulatory Guide 1.78. (mg/m^3)

E_{air} = Control Room air exchange rate expressed as changes per hour

Low Boiling Point Liquids and Compressed Gases

For the liquids and compressed gases whose normal boiling points are lower than the ambient temperature, the instantaneous vaporized liquid (puff) can be calculated by the following equation,

$$M_{V_o} = \frac{M_t \, C_p \, (T_o - T_b)}{H_v} \tag{2}$$

Where M_{V_o} = mass of instantaneously vaporized liquid (gm)

M_t = total initial mass of the liquid (gm)

C_p = heat capacity of the liquid (cal/gm ^oC)

T_o = ambient temperature (^oC)

T_b = normal boiling point of the liquid (^oC) $< T_o$

H_v = heat of vaporization of the liquid (cal/gm)

The remaining liquid, ($M_t - M_{V_o}$), will vaporize by absorption of heat from atmospheric (long-wave) radiation and solar (short-wave) radiation, convection of air and ground conduction. The rate of total heat transfer, in cal/sec, of the remaining liquid after instantaneous vaporization is given by the following equation,

$$\frac{dQ}{dt} = A_t \, (q_r + q_c + q_d) \tag{3}$$

The vaporization rate is then,

$$\frac{dM_v}{dt} = \frac{1}{H_v} \frac{dQ}{dt} \tag{4}$$

Where $\frac{dQ}{dt}$ = rate of total heat transfer (cal/sec)

A_t = surface area of the spill (m^2)

q_r = heat flux due to atmospheric and solar radiation (cal/m^2-sec)

q_c = heat flux due to convection of air over the spill (cal/m^2-sec)

q_d = heat transfer by ground conduction (cal/m^2-sec)

$\frac{dM_v}{dt}$ = vaporization rate (gm/sec)

Evaporation of Liquids Having Boiling Points Above Ambient Temperature

When exposed to the atmosphere, the liquids with boiling points above the ambient temperature will evaporate by diffusion into the air. The main driving force is the vapor pressure difference between the liquid phase and the air. The following two cases describe the difference depending on where the spill occurs,

Case A. - In a confined area without ventilation,

The air space in a confined building will eventually become saturated with the vapor of the spilled liquid, and the maximum vapor concentration will approach the following value,

$$C_s = \frac{P_s M}{R_g (T_a + 273)} \tag{5}$$

Where C_s = saturation concentration (gm/cm^3)

R_g = universal gas constant

M = molecular weight of the liquid (gm/mole)

T_a = ambient temperature (^oC)

P_s = saturation vapor pressure of the liquid at temperature T_a (mmHg)

Case B. - In a well ventilated area,

The evaporation of a liquid in a well ventilated area can be described as a mass transfer process by forced convection. The evaporation rate may be calculated by the following formula,

$$\frac{dM_v}{dt} = \frac{h_d M A_t (P_s - P_a)}{R_g (T_a + 273)} \tag{6}$$

Where h_d = mass transfer coefficient (cm/sec)

P_a = actual vapor pressure of the liquid in air (mmHg)

Table B3 is a summary of the toxic chemicals which are evaluated in the process described above. The elimination of some of these chemicals from further consideration is indicated in the two right-hand columns.

The toxic chemicals which are not otherwise eliminated require a calculation of their effect on the Control Room.

TABLE B1

LOCATION OF FACILITIES CONTACTED AND QUANTITIES OF HAZARDOUS MATERIALS WITHIN FIVE-MILE RADIUS OF INDIAN POINT

Kay-Fries Chemical Corporation - 3.75 Miles SSW (4) (13)

1,1,1 Trichloroethane	95,905 gallons
Ethylene Dichloride	7,410 gallons
Monochloracetic Acid	149,200 gallons
Methyl Monochloroacetate	21,253 gallons
Ethyl Monochloroacetate	225 gallons
Phenyl Glycylchloride HCL	426 gallons
Benzene	12,396 gallons
Toluene	4,297 gallons
Diethyl Benzene	129,050 gallons
Phthalic Anhydride	44,092 gallons
Diethyl Phthalate	199,613 gallons
Dimethyl Phthalate	223,148 gallons
Mandelonitrile	39,468 gallons
Phenyl Glycine	13,235 gallons
Ethyl Carboxy Benzyl Amino Crotonate, K Salt	18,884 gallons
Hydrogen Cyanide	11,000 gallons

U.S. Plastics and Chemical Corporation - 3.75 Miles SSW (14)

Styrene Monomer	10,000 gallons
Polyester Resin	24,000 gallons

Tensolite Company, Division of Carlisle Corporation - 1 Mile ESE (15)

Naphtha	5,000 gallons
Dimethylformamide	Two 55 gallon drums

Mearle Corporation - 0.75 Mile ENE (16)

Titanium Tetrachloride	8,000 gallons
Hydrochloric Acid	8,000 gallons
Lead Monoxide	1,000 gallons

Lightron Residential Lighting - 4.2 Miles East (4)
(Includes Magna Metal and Geringer & Sons)

Trichloroethylene Methyl Isobutyl Ketone Toluol	No more than three each 55 gallon drums
Black Oxidizer Plating Solution	600 gallons

TABLE B1 (cont)

Georgia Pacific - 0.5 Miles SW[17]

Propane (LPG)	2,000 gallons
Fuel Oil	50,000 gallons

U.S. Gypsum Company - 1.25 Miles SSW[18]

Fuel Oil (#2)	117,000 gallons
Gasoline	40,000 gallons
Alcohol	55 gallons
Acetone	55 gallons
Welding Gases	8 cylinders total

Tilcon Quarries - 0.5 Mile West[19]

Fuel Oil	30,000 gallons
Gasoline	2,000 gallons
Blasting Agents	None stored, all blasting contracted

Orange & Rockland Utilities, [20]

Bowline Point Generating Station - 4.5 Miles SSW

Fuel Oil (#6)	34,020,000 gallons

Exxon Corporation - Roa Hook Terminal - 1.75 Miles NNE[21]

Fuel Oil (#2)	4,410,000 gallons

Village of Buchanan Wastewater Treatment Plant - 0.75 Mile ENE[22]

No liquid chlorine presently, but plan to use some in near future

Peekskill Sewerage Disposal Plant - 2.2 Miles NNE[23]

Liquid Chlorine	10,000 gallons - 5 cylinders

Haverstraw Joint Regional Treatment Plant - 3.75 Miles SSW[24]

Liquid Chlorine	16,000 gallons - 8 cylinders

TABLE B1 (cont)

Times Square Stage Lighting - 3.75 Miles SSW (25)	
Paint Trichloroethylene	No more than ten 55 gallon drums total
Lighting Services - 3.75 Miles SSW(26)	
Paint and Paint Thinner	No more than ten 55 gallon drums total
Burkart Brothers - 1.25 Miles SSW(27)	
Paint Paint Thinner Ethylene Chloride	No more than five 55 gallon drums of each item
Precision Ammo Corporation - 4.5 Miles SSW(28)	
Solid Propellant, Class C Explosive	65 lbs. maximum
Chromatic Paint Corporation - 4.5 Miles SSW(29)	
Special Naphthalite Mineral Spirits Dry Pigments	No more than 10,000 gallons total
Hill Manufacturing - 4.5 Miles SSW (30)	
Wood Finish Thinner	No more than ten 55 gallon drums total
A.L. Okun Company, Inc. - 4.5 Miles SSW(4)	
Plastic Resins and solvents	No more than 5,000 gallon total

TABLE B2

MOBILE SOURCES OF TOXIC CHEMICALS
WITHIN FIVE MILE RADIUS OF INDIAN POINT

Toxic Chemical	Shipments/Year	Distance (miles)	Average Shipment Quantity (tons)
Anhydrous Ammonia	48	0.9	64
Carbolic Acid	214	0.9	87
Carbon Dioxide	89	0.9	81
Chlorine	213	0.9	77
Chlorine	31	0.6	50
Denatured Alcohol	121	0.9	68
Ethyl Acetate	34	0.9	75
Formaldehyde Solution	45	0.9	91
Hydrochloric Acid	127	0.9	89
Methanol	279	0.9	84
Petroleum Naphtha	84	0.9	64
Phosphoric Acid	67	0.9	95
Sodium Hydroxide	80	0.2	150
Sulfuric Acid	70	0.9	76
Xylene	30	0.9	45

TABLE B3

SUMMARY OF QUANTITY, DISTANCE AND CHEMICAL PROPERTIES OF TOXIC MATERIALS

Toxic Chemical	Vapor Pressure (Torr) @ 37.8°C (100°F)	Boiling Point (°C)	Quantity Stored Off-site (Gallons)	Quantity Stored On-site (Gallons)	Quantity Transported (Tons)	Source To Control Room Makeup Air Intake Distance (Mile)	Direction	Further Consideration Required Yes/No	Reason
Ammonium Hydroxide	> 10	-82.4		55		0.08	Note 4	No	Note 5
Anhydrous Ammonia	> 760	-33.0			64	0.9	Note 3	Yes	-
Benzene	121.0	80.1	12,400			3.75	SSW	Yes	-
Carbolic Acid (Phenol)	< 1.0	181.9			87	0.9	Note 3	No	Note 1
Carbon Dioxide (Liquified)	> 760.0	-191.3			81	0.9	Note 3	Yes	-
Chlorine (Liquid)	> 760.0	-34.5			77	0.9	Note 3	Yes	-
Chlorine (Liquid)	> 760.0	-34.5			50	0.6	Note 3	Yes	-
Denatured Alcohol	80.0	79.4			68	0.9	Note 3	Yes	-
Diethyl Benzene	1.3	183.8	129,050			3.75	SSW	No	Note 1
Diethyl Phthalates	3.2	296.0	199,620			3.75	SSW	No	Note 1
Dimethylformamide	3.3	283.7	55 2 Tanks			1	ESE	No	Note 1

TABLE B3 (cont)

SUMMARY OF QUANTITY, DISTANCE AND CHEMICAL PROPERTIES OF TOXIC MATERIALS

Toxic Chemical	Vapor Pressure (Torr) @ 37.8°C (100 F)	Boiling Point (°C)	Qunatity Stored Off-site (Gallons)	Quantity Stored On-site (Gallons)	Quantity Transported (Tons)	Source To Control Room Makeup Air Intake Distance (Mile)	Direction	Further Consideration Required Yes/No	Reason
Ethyl Acetate	140.0	77.2			75	0.9	Note 3	Yes	-
Ethylene Dichloride	115.1	83.5	7,410			3.75	SSW	Yes	-
Ethyl Monochloro-acetate	10.1	143.6	225			3.75	SSW	No	Note 2
Ferric Chloride	< 1.0	319.0			91	0.9	Note 3	No	Note 1
Formaldehyde Solution (37%)	3.8	97			91	0.9	Note 3	No	Note 1
Hydrazine	< 10	113.5		55		0.08	Note 4	No	Note 1
Hydrochloric Acid	217.0	-85			89	0.9	Note 3	Yes	-
Hydrogen Cyanide	> 760.0	26.1	11,000			3.75	SSW	Yes	-
Methanol	178.0	64.8			84	0.9	Note 3	Yes	-
Monochloro-acetic Acid	< 1.0	189.0	149.200			3.75	SSW	No	Note 1

TABLE B3 (cont)

SUMMARY OF QUANTITY, DISTANCE AND CHEMICAL PROPERTIES OF TOXIC MATERIALS

Toxic Chemical	Vapor Pressure (Torr) @ 37.8°C (100 F)	Boiling Point (°C)	Quantity Stored Off-site (Gallons)	Quantity Stored On-site (Gallons)	Quantity Transported (Tons)	Source to Control Room Makeup Air Intake Distance (Mile)	Direction	Further Consideration Required Yes/No	Reason
Naphtha	5.4	149.0	5,000			1.00	ESE	No	Note 1
Petroleum Naphtha	< 1.0	40-80			64	0.9	Note 3	No	Note 1
Phosphoric Acid (100%)	< 1.0	261			95	0.9	Note 3	No	Note 1
Phthalic Anhydride	< 1.0	295.0	44,090			3.75	SSW	No	Note 1
Sodium Hydroxide (50%)	< 1.0	140.0			150	0.2	Note 3	No	Note 1
Styrene Monomer	6.0	145.2	10,000			3.75	SSW	No	Note 1
Sulfuric Acid (98%)	3.4	330.0			76	0.9	Note 3	No	Note 1
Toluene	45.4	110.4	7,000			1.50	SE	Yes	-
Trichloroethane	110.4	74.1	95,905			3.75	SSW	Yes	-
Xylene	13.8	138.3			45	0.9	Note 3	Yes	-

TABLE B3 (cont)

Note 1 - Chemicals that are liquids with vapor pressure lower than 10 torr at 37.8°C (100°F) and normal atmospheric pressure.

Note 2 - Insignificant quantity.

Note 3 - Nearest distance from Indian Point site.

Note 4 - Shortest vapor path to Control Room makeup air intake.

Note 5 - Limited quantity and dilution provided by Turbine Hall Building ventilation system.

References

1. "List of Major Employers", First Edition, Rockland County Association, Undated.

2. "Major Employers in Westchester County", Westchester County Association, Ninth Edition, 1980.

3. "Reference Book - September 1980", Dun & Bradstreet, Inc. 1980.

4. "Trip Report" for March 4, 1981 Field Survey, United Engineers & Constructors, March 11, 1981.

5. "Trip Report" for February 20, 1981 Field Survey, United Engineers & Constructors, February 24, 1981.

6. Peekskill, N.Y. Quadrangle, United States Geological Survey, 1957.

7. Personal Communication, Mr. Helmer, Region 8, New York State Department of Transportation, February 24, 1981.

8. Hartford, Conn., 1:250,000 Map, United States Geological Survey, 1975.

9. "Hazardous Materials Node Report", Shipment Activity from January 1978 through June 1979, Marketing and Sales Division, Consolidated Railroad Corporation, Philadelphia, PA, March 17, 1981.

10. Hudson River, New York to Wappinger Creek, Chart 12343, United States Department of Commerce, National Oceanic and Atmospheric Administration, July 5, 1980.

11. "Waterborne Commerce of the United States, Part I, 1978", Department of the Army, Corps of Engineers.

12. Equation (3-1), "Workbook of Atmospheric Dispersion Estimates", D. Bruce Turner; Environmental Protection Agency, 1970.

13. Personal Communication, George Bitler, Director of Engineering, Kay-Fries Chemical Corporation, February 18, 1981.

14. Personal Communication, William Diener, U.S. Plastic and Chemical, February 19, 1981.

15. Personal Communication, John Beatty, Facilities Manager, Tensolite Company, Division of Carlisle Corporation, February 18, 1981.

16. Personal Communication, Mr. Eberts, Plant Manager, Mearle Corporation, February 18, 1981.

17. Personal Communication, Stanley Seqall, Georgia-Pacific Corporation, February 18, 1981.

18. Written Correspondence, Fred Ferro, United States Gypsum Corporation, March 13, 1981.

19. Personal Communication, William Sheppard, Tilcon Quarries, February 20, 1981.

20. "Draft Environmental Statement - Bowline Point Generating Station", Department of the Army, New York District, Corps of Engineers, August 1977.

21. Personal Communication, Facility Superintendent, Exxon Corporation, Roa Hook Terminal, February 25, 1981.

22. Personal Communication, Chief Operator, Village of Buchanan Wastewater Treatment Plant, February 20, 1981.

23. Personal Communication, Assistant Operator, Annsville Treatment Plant, City of Peekskill, February 20, 1981.

24. Personal Communication, Alfred Addice, Haverstraw Joint Regional Treatment Plant, February 19, 1981.

25. Personal Communication, Manager, Times Square Stage Lighting Company, February 19, 1981.

26. Personal Communication, John Savine, Lighting Services, February 19, 1981.

27. Personal Communication, Mr. Burkart, Burkart Brothers, Inc., February 19, 1981.

28. Personal Communication, Mr. Smith, Precision Ammo Corporation, March 17, 1981.

29. Personal Communication, Steve Berman, Chromatic Paint Corporation, March 17, 1981.

30. Personal Communication, Hill Manufacturing, Inc., February 18, 1981.

31. Handbook of Chemistry & Physics, 60 th Edition, Chemical Rubber Publishing Company.

32. N. Irving Sax, "Dangerous Properties of Industrial Materials", Litton Educational Publishing Inc. 1979.

Distribution

Docket Files
TSB R/F
NRC PDR
L PDR
PFine
GZech
HLThompson
ORB #1 R/F
SVarga
DEisenhut

RECEIVED
APR 27 1981
U.S. NUCLEAR REGULATORY COMMISSION

Identical Letters sent to:

Ms. Anne Benevent
176 Burda Avenue
New City, New York 10956

Ms. Zelda Davidow
153-24 Booth Mem. Avenue
Flushing, N.Y. 11355

Mr. Alexa Bontempo
Box 161
SUNY
Purchase, N.Y. 10577

Ms. Dorothy Nierman
2901 Hickory Street
Yorktown, N.Y. 110598

Ms. Jean Hoffman
67-44 164 Street
Flushing, N.Y. 11365

Ms. Claire Vago
164-13 73 Avenue
Flushing, N.Y. 11366

Ms. Esther S. Rosenthal
149-06 61 Road
Flushing, N.Y. 11367

Mr. & Mrs. Leonard Boyer
61-38 150 Street
Flushing, N.Y. 11367

Ms. May L. Hammer
68-09 Burns Street
Forest Hills, N.Y. 11375

Mr. & Mrs. George Esterowitz
P.O. Box 817
Truro, MA 02666

Mr. Stanley Weingast
32 Olcott
Croton On Hudson, NY 10520

Mr. & Mrs. Adam Spilka
35 Bow Street
Forest Hills, NY 11375

Ms. Margaret Rose
173 Hicks Street
Brooklyn, NY 11201

Mr. L. Salzman
Friends of the Earth
72 Jane Street
New York, NY 10014

Ms. Sheryl Pygin
227 President Street
Brooklyn, NY 11231

Mr. M. Cammarata
41 Bartley Lane
West Sayville, NY 11796

Ms. L. Chiusano
59 Chestwood Dr.
Shirley, NY 11967

Members of Solar
24 Parsons Street
Harrison, NY 10528

Mr. Lee Warshabsky
22 3 Street
Brooklyn, NY 11231

Ms. Ann Spanel
210 Riverside Dr.
New York, NY 10025

People Outraged with Energy Rates
New York Public Interest Research Group
Mailgram Service Center
Middletown, VA 22645

Ms. Linda Giuli
116 Dubois Avenue
Mamaroneck, NY 10543

Mr. Kirk O'Ferrall
24 Oxford Place
Staten Island, NY 10301

Mr. Bill Hafner, Director
Peoples Energy Information Service
54 Robinwood Street
Mastic, NY 11950

Ms. Elizabeth Pugh
799 Union Road
Spring Valley, NY 10977

Mr. Conrad Brown
262 Furnace Dock Road
Peekskill, NY 10566

Mr. & Mrs. Frank Cassel
43-23 166 Street
Flushing, NY 11358

Mr. Paul Tick
161-04 84 Road
Jamaica, NY 11432

Mrs. Peter Dormont
21 Branford Road
Hastings on Hudson, NY 10706

Dr. & Mrs. Emanuel Chusid
765 Gramatan Avenue
Mount Vernon, NY 10552

Mr. & Mrs. Howard Fawcett
6 Hardscrabble Road
Briarcliff Manor, NY 10510

Mrs. John C. Besson and
Members of United Citizens Against Nukes
50 St. John Place
New Canaan, Connecticut 06840

Ms. Florence Mason
172-18 73 Avenue
Flushing, NY 11366

Ms. Mildred Mogulescu
6 Peter Cooper Road
New York, NY 10010

Ms. Jonell dePoto
Box 538
SUNY Purchase
Purchase, NY 10577

Mr. Karl Bernhard
14 Scholar Lane
Levittown, NY 11756

Mrs. R. Bedoiaus
2 Sydney Street
Plainview, NY 11803

Ms. Phyllis Rodriguez
64 Elmore Avenue
Croton, NY 10520

Mr. P. Posner
22 Park Trail
Croton, NY 10520

Mrs. Diane Otten
9 Lawnview Avenue
Hicksville, N.Y. 11801

Ms. Sophia Adler
Box 1613
Southold, N.Y. 11971