Official Transcript of Proceedings

NUCLEAR REGULATORY COMMISSION

Title: Advisory Committee on Reactor Safeguards
Reliability and Probabilistic
Risk Assessment Subcommittee

Docket Number: (n/a)

Location: Rockville, Maryland

Date: Friday, November 13, 2009

Work Order No.: NRC-3194 Pages 1-264

NEAL R. GROSS AND CO., INC.
Court Reporters and Transcribers
1323 Rhode Island Avenue, N.W.
Washington, D.C. 20005
(202) 234-4433

DISCLAIMER

UNITED STATES NUCLEAR REGULATORY COMMISSION'S
ADVISORY COMMITTEE ON REACTOR SAFEGUARDS

The contents of this transcript of the proceeding of the United States Nuclear Regulatory Commission Advisory Committee on Reactor Safeguards, as reported herein, is a record of the discussions recorded at the meeting.

This transcript has not been reviewed, corrected, and edited, and it may contain inaccuracies.

UNITED STATES OF AMERICA

NUCLEAR REGULATORY COMMISSION

+ + + + +

ADVISORY COMMITTEE ON REACTOR SAFEGUARDS (ACRS)

+ + + + +

SUBCOMMITTEE ON RELIABILITY AND

PROBABILISTIC RISK ASSESSMENT

+ + + + +

FRIDAY,

NOVEMBER 13, 2009

+ + + + +

ROCKVILLE, MARYLAND

+ + + + +

The Subcommittee met at the Nuclear Regulatory Commission, Two White Flint North, Room T2B3, 11545 Rockville Pike, Rockville, Maryland, at 8:30 a.m., George Apostolakis, Chairman, presiding.

SUBCOMMITTEE MEMBERS PRESENT:

GEORGE APOSTOLAKIS, Chairman

DENNIS C. BLEY

HAROLD B. RAY

MICHAEL T. RYAN

WILLIAM J. SHACK

JOHN D. SIEBER

JOHN W. STETKAR

NRC STAFF PRESENT:

GIRIJA S. SHUKLA, Designated Federal Official

SUNIL WEERAKKODY

STEVE LAUR

DONNIE HARRISON

HARRY BARRETT

RAY GALLUCCI

ALSO PRESENT:

JEFFREY ERTMAN

DAVID MISKIEWICZ

RICH FREUDENBERGER

JASON PATTERSON

DAVID GOFORTH

KIANG ZEE

BIFF BRADLEY

TABLE OF CONTENTS

PAGE

Opening Remarks and Objectives 4

Opening Remarks 5

NRC Staff Presentation on Proposed 9
Draft Final Regulatory Guide 1.205,
Revision 1, and Proposed Final SRP
Section 9.5.1.2

Progress Energy Perspective 95

Duke Energy Perspective 172

Industry Perspectives 224

Discussion 236

NRC Concluding Remarks 261

Adjourn

P-R-O-C-E-E-D-I-N-G-S

(8:30 a.m.)

CHAIRMAN APOSTOLAKIS: The meeting will now come to order. This is a meeting of the Advisory Committee on Reactor Safeguards, Subcommittee on Reliability and Risk Assessment.

I am George Apostolakis, Chairman of the Subcommittee.

Subcommittee members in attendance are Dennis Bley, Harold Gray, Mike Ryan, Bill Shack, Jack Sieber, and John Stetkar.

The purpose of this meeting is to discuss the draft final Regulatory Guide 1.205, risk-informed, performance-based fire protection for existing light water nuclear power plants, and draft final standard review plan, Section 9.5.1.2, risk-informed, performance-based fire protection program.

The Subcommittee will gather information, analyze the relevant issues and facts, and formulate proposed positions and actions as appropriate for deliberation by the full Committee.

Mr. Girija Shukla is the Designated Federal Official for this meeting.

The rules for participation in today's meeting have been announced as part of the notice of

this meeting previously published in the Federal Register on October 22, 2009.

A transcript of the meeting is being kept and will be made available as stated in the Federal Register notice. It is requested that speakers first identify themselves and speak with sufficient clarity and volume so that they can be readily heard.

We have received no written comments or requests for time to make oral statements from members of the public regarding today's meeting.

We will now proceed with the meeting, and I call upon NRR management to make introductory remarks. Does this mean you, Sunil?

MR. WEERAKKODY: Yes, that's me.

CHAIRMAN APOSTOLAKIS: NRR management?

MR. WEERAKKODY: Yes, sir.

CHAIRMAN APOSTOLAKIS: Go ahead.

MR. WEERAKKODY: My name is Sunil Weerakkody, Deputy Director, Fire Protection, in the Division of Risk Assessment. And it is kind of like yesterday we were before the full Committee on the other reg guide, Reg Guide 1.189.

I just wanted to take a minute to share with you that seven days after we received your endorsement to that reg guide, we published the reg

guide, and because of that the licensees have -- are on the clock to identify any multiple spurious actions within six months, and disposition them within the next 30 months. So I just want to take a minute to thank you on that.

I also want to take about 10 minutes on the introductory remarks today, mainly because, you know, this is the third time we are coming to the Subcommittee asking your endorsement to let us go to the full Committee to get this reg guide out also. The first time was on 1st of June, I think somewhere in June, we came here just to give you -- an informational meeting. We didn't have any public comments at that time.

And then, we came to the Subcommittee about three months ago, August 18. And at that time, we had several issues. You know, there were a couple of key issues where internally, you know, we -- amongst ourselves we had different views. And, you know, some of the things in the draft reg guide we brought to you, you know, the key stakeholders had major problems with, and, you know, you asked us a couple of questions that made us think hard.

And Nuclear Energy Institute, you know, basically came and said they didn't have much time at

all to provide any constructive comments and context. We took that to heart. We worked very hard for the last three months, and try to take care of those things. I think we are in a better place in that today we are coming to you with the reg guide that all of the NRR staff can live with.

You know, we are intelligent people. We always have slightly different views. And we have had a number of interactions with the licensees, actually two public meetings, to listen to them carefully and work out some of the key differences. And we thought hard about some of the questions you raised and made some changes.

So that is where we are, and now I will go into my slides here. One of the points I wanted to make was in a number of the other meetings we had questions about the rule. Is the rule coherent? Is the rule problematic? And on hindsight what we found out was the rule was coherent -- we were not -- in that we needed these pilot applications in order to fully understand the nuances and work out Rev 1 of this reg guide, which is in my view far superior to Rev 0.

It is a reg guide -- the Rev 1 is improved. It has additional clarity, added some

guidance to facilitate compliance with the rule. It is clear and consistent in its regulatory positions, and also, as I mentioned earlier, it is fully vetted to the stakeholders.

We had comments received when we showed it in I think -- I think somewhere around March. We got some input from you. We have those comments. The version that you have has received NRR, NRO, Research, and OGC concurrence. And the final draft was shared with the public and discussed in two Category 3 public meetings on September 10th and October 29th.

Next slide.

The objectives of the briefing -- we have one primary objective. We are requesting that the Subcommittee recommends that we have the opportunity to brief the full Committee. Right now the tentative dates is December 3, 2009. We request that you endorse this reg guide, this version, and the standard review plans that is going along with that.

And we firmly believe that, even though there may be some imperfections, this guidance significantly improves clarity and provides the regulatory stability for both pilot plants and all of the other plants that are adopting 805.

And, again, this is -- issuance of this

reg guide and the SRP at this time is going to foster clarity and the regulatory stability for all of those 50 plants who are adopting 805.

With that remark, Steve Laur is going to lay out the presentation. And Donnie Harrison here is the Branch Chief of the PRA Licensing Branch. And Harry Barrett, he is the Lead Project Manager in charge of the Harris pilot plant.

So any questions for me before I sit there and take notes?

(No response.)

MR. LAUR: Thank you, Sunil. Good morning. As Sunil said, I am Steve Laur. I'm a senior-level advisor in the Division of Risk Assessment in NRR.

We would like -- we have a very brief presentation to allow time to -- time if the Committee has any questions. I'm sure it will go very smoothly.

We'd like to cover pretty much the changes to the reg guide since the last time we briefed you on August 18th. We would also like to include the standard review plan as part of your endorsement to the full Committee.

I have some backup slides, if you want to talk about it, but pretty much these two -- as I have

said on other occasions, these two documents are hand-in-glove. They -- the same kind of comments, the same kind of issues, were resolved in both of these documents, and we received a full package on both of the documents prior to the meeting. So if you have questions, we can entertain them. But I wasn't planning to address the standard review plan specifically.

I would also like to briefly talk about public meeting interaction. As Sunil said, we had two public meetings specifically to address the final draft guide, and, in fact, we had another public meeting yesterday, which was a pilot meeting, to hear how the pilots are actually incorporating this guidance. And I believe they have presentations on the agenda later today. And then, we will conclude after a suitable question period.

So just a quick background -- both of these documents were made available for public comment for at least 60 days. The standard review plan went out earlier, and, therefore, we extended the comment period to coincide with the reg guide itself. And we received numerous comments from the industry in the form of a marked up, complete copy of the reg guide with annotated comments. I think you've seen that in

one of our earlier submittals here.

We fully considered all of the comments and incorporated the vast majority of them. The remainder that we could not incorporate as suggested correspond to parts where the guidance as written was necessary for compliance with the regulation.

We came to the ACRS Subcommittee in June, August, and today. We went to the Committee to review generic requirements and had a letter from them. And as I mentioned, we had these two public stakeholder meetings, and then we are hoping to be able to go to the ACRS Committee on December 3rd. That is important not only because of the importance of this issue to the Commission and the schedule, but also to provide regulatory stability. And I think you will hear from the pilots similar sentiments.

Okay. So what changes pretty much since the August 18th meeting, there were four major changes, and I am going to cover them on this slide, except for the very last one. I have an additional slide.

But the first one had to do with cumulative risk. At the last meeting, we explained how this reg guide provides one method of dealing with previously approved recovery actions and the

additional risk of those. We were a little unclear in our presentation as to what happens after a plant implements 805, and so we have clarified that consistent with the original reg guide to say that any effect of plant changes to the fire protection program on cumulative risk starts over once you transition, so-called rebaselining of the risk.

So your risk after you implement is where you start for considering the cumulative impact of changes.

CHAIRMAN APOSTOLAKIS: So this is something that we can compare because it -- it's a little confusing. I have transitioned to NFPA 805, and I have a plant now that some of it complies with the former -- with Appendix R. Other things have been approved as exemptions. I have a basic fire protection program now.

I calculate my CDF due to fires using this real state of my plant. Is that correct?

MR. LAUR: Correct.

CHAIRMAN APOSTOLAKIS: So from now on all of my changes will have to be compared to that particular state.

MR. LAUR: That's correct.

CHAIRMAN APOSTOLAKIS: On the other hand,

there is an opening statement here in the guide that says that doing a fire PRA is not necessary. So for those licensees who transition to NFPA 805 without a fire PRA, then they can't do what you just said, right? They don't have a PRA. You don't to have a PRA.

MR. LAUR: Right. I believe the biggest impact is going to be the ability or the lack of ability to self-approve changes to the fire protection program.

CHAIRMAN APOSTOLAKIS: Okay. Because then you have those limits of 10^{-7}. They cannot use risk-informed changes at all from now on, correct, because they don't have a PRA?

MR. LAUR: I believe that's correct.

CHAIRMAN APOSTOLAKIS: So if they want to effect any changes, they would have to go back to the deterministic way of doing that. Is that right? You can still use the -- can you still use deterministic methods for changes after you transition to NFPA 805? That's the question.

MR. LAUR: They can use the deterministic changes as set forth in the plant-specific license conditions that would be granted when the --

CHAIRMAN APOSTOLAKIS: Right.

MR. LAUR: -- when the license was issued. Okay. And that includes -- they're enumerated there, but they are the type of things that have to do with the Chapter 3 functional equivalency and sufficient for the hazard, adequate --

CHAIRMAN APOSTOLAKIS: Yes. And, you know, basically an Appendix R approach that says that you have to secure one cooling path.

MR. LAUR: Right.

CHAIRMAN APOSTOLAKIS: Yes. I mean, all that --

MR. LAUR: They could show --

CHAIRMAN APOSTOLAKIS: -- stuff is deterministic.

MR. LAUR: But a plant could still come in for a fire risk or fire modeling evaluation. The difference is they would have to come in with a license amendment request, and the staff would have to review it, because the standard allows them to use bounding methods or --

CHAIRMAN APOSTOLAKIS: Yes.

MR. LAUR: -- non-PRA methods. They wouldn't be able to do it -- self-approval using the risk-based method, because they don't have the tool, the PRA, that's required to do it.

CHAIRMAN APOSTOLAKIS: Right. They wouldn't be able to do any risk-informed change, because they don't have a PRA.

MR. HARRISON: Unless they develop one for the application.

CHAIRMAN APOSTOLAKIS: Unless what?

MR. HARRISON: They would have to develop a PRA for that application.

CHAIRMAN APOSTOLAKIS: Well, if they do, then it's a different story.

MR. HARRISON: Right. That's what you're making --

CHAIRMAN APOSTOLAKIS: So that is for after the transition. Now, during the transition, this is where it gets confusing. The first question, they can use risk methods for selected fire areas, I understand.

MR. LAUR: That's correct.

CHAIRMAN APOSTOLAKIS: But not a full PRA? They don't have to have a PRA for the plant, but for certain areas they may invoke risk arguments, if they don't comply with Appendix R or with the NFPA fundamental -- what do they call them? Fundamental elements.

MR. LAUR: Elements, right.

CHAIRMAN APOSTOLAKIS: They can use risk arguments to get out of it. Isn't that cherry-picking? I mean, we have in the past said that either you do something in a risk-informed way or you don't. You can't say for this room I will use deterministic methods, but for the next room, which is new, I am going to use risk methods. I don't understand that. And how can you use Regulatory Guide 1.174 if you don't have the baseline CDF and LERF for the plant, which you won't have because you don't have a PRA yet.

Now, I admit that the guidance in 1.174 is kind of insensitive to CDF and LERF. I mean, it is fairly flat. But, still, it is kind of odd that one can use a guide without the CDF.

MR. LAUR: Yes, the statement that -- I believe it's one sentence in the regulatory guide that you are --

CHAIRMAN APOSTOLAKIS: It is a killer sentence.

MR. LAUR: Right. But when you --

CHAIRMAN APOSTOLAKIS: Yes.

MR. LAUR: -- if you read the entire -- the rest of the reg guide, it is very clear that the typical way we expect someone to transition in order to get the full benefit that was envisioned in the

regulatory analysis for the rule is to do a PRA, so you get the self-approval and all of those side benefits.

Okay. Because I guess the state of the art or the -- I guess based on the Commission's policy goal statement or PRA quality statement, we now have a new version of Reg Guide 1.200 that talks about what kind of PRA technical adequacy you have to have. We have -- still have Reg Guide 1.174 that provides the acceptance guidelines.

So other than that one statement that the bulk of the reg guide points you down the path of a fire PRA, we don't preclude it because it is not precluded, if I recall, in the Statements of Consideration and allow you to transition. It doesn't allow you to cherry-pick, but it does -- it allows you to transition without a fire PRA.

CHAIRMAN APOSTOLAKIS: It does. Yes, it does allow you to cherry-pick, because in some areas I can select -- I can choose to apply risk methods. In other areas, I choose not to. So when it behooves me, risk is good. When it doesn't, risk is bad.

But then, how -- and then you are supposed to compare -- you know, let's say I am doing it for this room, to 1.174, which is really a global guidance

for changes in the plant, not individual little things in the plant. It can be a little thing, but -- so I'm a little confused there.

The guide -- I mean, you know, all -- any increase in risk should be acceptable, and the total increase in risk should be acceptable. I agree with all of this. But this business of selecting areas for -- in doing risk and others not to, it is -- it doesn't make sense to me.

MR. LAUR: I think I got a little confused on the original question, and I -- you may be mixing two terms. I'm not sure. Whether or not you need a fire PRA is in my mind a different topic than cherry-picking. When we say we don't -- when we say cherry-picking is not the way to go, we are talking about mixing Appendix R or a previous licensing basis within NFPA 805.

CHAIRMAN APOSTOLAKIS: Right.

MR. LAUR: NFPA 805 is supposed to be adopted as a whole. Okay. We don't want two different licensing bases. But that -- within that standard, within that rule, it allows both deterministic and the performance-based. And in performance-based there are two in the standard, one is fire modeling, one is fire risk. And so it allows

you to say, "I meet the deterministic rules of 805," not the previous licensing basis. It turns out they are very similar -- that's a different issue -- but you meet 805.

And so there is, arguably, no delta risk there, because the standard says compliance with the deterministic requirements is deemed to meet the nuclear safety performance criteria, similar to the previous licensing basis but it's different. And so I come with a -- if I have a fire area that totally meets the deterministic requirements of NFPA 805, I am done. There is no delta risk.

If I go to another area and I have some variation from what is required, and maybe it's an alternate train capable going through the fire area, I have some options. I can make it meet the deterministic criteria by moving that cable --

CHAIRMAN APOSTOLAKIS: Yes.

MR. LAUR: -- or wrapping the cable, whatever is required, and, therefore, once again, I haven't done any risk. Or I can elect to use one of the performance-based methods in the standard.

Now, if you had a handful of rooms that used the fire risk evaluation, and you summed the risk increases or the delta risk, you at least have one of

the parameters you need for the 1.174. And as you pointed out, it is relatively flat on the X-axis. I mean, 1.174 says, I believe, you can estimate the missing parts to figure out where you are on the X-axis, and apply the delta that is appropriate for that.

CHAIRMAN APOSTOLAKIS: Right. This is really where it is an unusual application of risk-informed decision-making, because let's say I do this -- I do a risk evaluation for all of the areas where I have a deviation. That delta now is greater than what the regulatory guide would allow.

Then, I put together a group of smart people, and they say, well, gee, you know, if we go to areas X, Y, and Z, and use performance-based methods, alternative methods, we can show deterministically that we are okay. But if we do that, we are taking out of the delta risk a good part of it. So now we are meeting the regulatory guide, and that bothers me, because either you are risk-informed or you are not.

And now on the other side, of course, a reviewer may catch that, but that's not the way to write the regulations. You are relying on, again, how good people are.

So it is really a mystery to me. I mean,

I am reading here 2.2.4, "Licensees may evaluate fire areas using performance-based approaches. The performance-based approaches may be fire modeling or other engineering analyses, a fire risk evaluation, or a risk-informed or performance-based alternative to compliance with NFPA 805."

So I would like to see something here that says, "If you want to use risk methods, use it for other areas." So that is one comment.

The second comment that is still confusing me is: how do you calculate the delta? In all risk-informed applications that I have seen in other areas, you have a plant, you can go and touch components. You know you can measure distances and do the baseline risk analysis. And then, you have a change, you calculate a new configuration, and you find delta risk.

Here, unless I am wrong, you are supposed -- the baseline configuration is an ideal configuration, where you comply with NFPA 805, even though your plant does not. So now you are doing a risk analysis of a plant that is on paper, not the real plant, and then that is your baseline CDF.

MR. HARRISON: Yes. That is actually not correct.

CHAIRMAN APOSTOLAKIS: That's not correct.

MR. HARRISON: No.

CHAIRMAN APOSTOLAKIS: I'm glad if it's not correct, because that bothers me.

MR. HARRISON: In doing the recovery action piece that comes out of 805, there is a requirement that if you are relying on a recovery action you have to calculate a delta. That is between your baseline plant, what you've got, and the ideal plant.

CHAIRMAN APOSTOLAKIS: Right.

MR. HARRISON: Right. But your baseline plant is your baseline plant. It's the plant you are at.

CHAIRMAN APOSTOLAKIS: No, the baseline is the ideal.

MR. HARRISON: No, that's --

CHAIRMAN APOSTOLAKIS: Because you are increasing risk with your real plant.

MR. HARRISON: Right. Understand.

CHAIRMAN APOSTOLAKIS: So the ideal plant --

MR. HARRISON: Understand. But --

CHAIRMAN APOSTOLAKIS: -- has no worries.

MR. HARRISON: -- once you -- once you get

through transition, what you're doing --

CHAIRMAN APOSTOLAKIS: No, no, no. You --

MR. HARRISON: During transition, what your baseline is is actually the plant. And you're saying, "If I were to comply, the risk would have gone, if you will, would have gone down." So I am calculating it backwards than what you are normally used to doing it.

CHAIRMAN APOSTOLAKIS: Okay. Still, my question stands. Are you still doing something for --

MR. HARRISON: But, again, the way you are doing that in the fire modeling is -- fire PRA, you are doing that room by room. So you are dealing with each of those recovery actions, if you will, to calculate that.

CHAIRMAN APOSTOLAKIS: But it is not just recovery actions. You are allowing it for other deviations.

MR. LAUR: Yes, it could be hardware. No, I think -- I think you are correct, George. It's an idea plant in the sense that it's a plant that, had you built it knowing this standard existed --

CHAIRMAN APOSTOLAKIS: Yes.

MR. LAUR: -- you would have had the proper three-hour barriers, and you would have had 20

feet of separation, you would have had suppression detection as required to meet the deterministic. And like I said, the assumption is if you meet the deterministic, you're okay. This is not a risk-based rule. It's a risk-informed rule, so it does have elements of the deterministic.

So I look at this plant, and there -- I guess in my mind there are two major categories that I could think of under your question. The first one is something that would be called an Appendix R, III.G.2 type of scenario, where I have an Alpha train of something, and I have a Bravo train or something, and maybe I have a Charlie -- I don't know -- but I have these trains, and, you know, at least in more modern plants you expect those to be separated in separate fire areas, with the cabling not transversing the room.

But we find in actual practice that they do sometimes have cables routed, control cables, actual power cables, routed through the other train room. Okay? When we say an ideal plant, the idea plant that you are postulating is one that had the separation. It is not that difficult. I mean, it -- the fact that it is a paper plant doesn't mean it couldn't be designed, or maybe isn't being designed

today in the new reactors.

The delta risk is, if I had built it that way compared to the way I did built it. And the way the pilots are actually doing that is -- when I say a cable going through a room, they have more than one. Okay? But let's say I just have one cable from the other train in this room, and maybe only some of the sources near that cable could damage it. So that reduces the overall frequency and the scenarios I have to look at.

And I can say if that cable were moved, those sequences that -- that that fire on that cable caused the damage would not be in the answer. But they are in the answer, and that's the delta.

CHAIRMAN APOSTOLAKIS: I think your example is kind of neat, because I can do that. I mean, if you give me distances, I can do it. But how about if you have a fire barrier. There was supposed to be, you know, a three-hour and it turns out it is not.

Then, it seems to me the methods we have are not that -- they are not really that detailed to be able to tell you the risk change now, because you only have two-hour barrier instead of three. You are going to have to do some heat transfer calculations,

and I don't know how reliable those are.

So it is not always as clear as that. But the more fundamental problem I have is, again, another sentence here. Any increase or decrease in risk, both in terms of core damage frequency and large early release frequency, should be evaluated and provided for each area, fire area, that uses a fire risk evaluation. I mean, this is a very clear statement that you don't have to do it for all areas. And I don't -- I am not sure I like that.

MEMBER RAY: George, you've got two things on the table here, it seems.

CHAIRMAN APOSTOLAKIS: I have many things.

MEMBER RAY: All right. But --

CHAIRMAN APOSTOLAKIS: You are right. You are right.

MEMBER RAY: -- I am, unfortunately, trying to perceive this from -- not as well-informed as you are. But at least the two that I am trying to track as you talk here is the one you just made.

CHAIRMAN APOSTOLAKIS: Yes.

MEMBER RAY: Different areas treated differently. But before that, you were also seeming to challenge the notion of determining what the delta risk is between the plant I have and the plant I would

have --

CHAIRMAN APOSTOLAKIS: Yes.

MEMBER RAY: -- if conformed with 805.

CHAIRMAN APOSTOLAKIS: Right.

MEMBER RAY: So these are two issues.

CHAIRMAN APOSTOLAKIS: Yes.

MEMBER RAY: Let me go back to the first one. What is the problem you see with saying you need to know what the risk is of your actual plant relative to a conforming plant or a -- your plant if it were to conform before you start making changes? What is wrong with that in your mind?

CHAIRMAN APOSTOLAKIS: Do you mean the difference between the ideal plant and the --

MEMBER RAY: You call it ideal, but to me it is just your plant --

CHAIRMAN APOSTOLAKIS: Okay.

MEMBER RAY: -- conforming with the deterministic requirements.

CHAIRMAN APOSTOLAKIS: I think this approach assumes that the methods we have to do a fire PRA are much more powerful than they actually are.

MEMBER RAY: Okay. So it is a -- it is how accurate or how --

CHAIRMAN APOSTOLAKIS: Yes.

MEMBER RAY: -- reasonable it is to have somebody obliged to make that determination in the first place. That's your problem.

CHAIRMAN APOSTOLAKIS: That's my problem.

MEMBER RAY: It's not with the idea that, well, you ought to know where you are relative to a conforming plant before you start making changes. That's not your problem, because we talked about that last time.

CHAIRMAN APOSTOLAKIS: Not my problem, but I find it very unusual.

MEMBER RAY: Okay.

CHAIRMAN APOSTOLAKIS: That's okay. Maybe with a lot of effort you can identify those.

MEMBER RAY: Because it seemed to me like we were repeating the debate from before, but --

CHAIRMAN APOSTOLAKIS: Right.

MEMBER RAY: All right. The second --

CHAIRMAN APOSTOLAKIS: So that --

MEMBER RAY: -- point you're making, which is the difference in treatment between areas, I'm with you on that.

CHAIRMAN APOSTOLAKIS: Yes.

MEMBER RAY: Okay.

MEMBER SHACK: But that's part of the

rule. I don't think the -- the reg guide doesn't -- you know, the reg guide -- there is nothing they are going to do to the reg guide to get you out of that problem.

CHAIRMAN APOSTOLAKIS: Where does the rule say that? We have to find it.

MR. BARRETT: In Chapter 4. Chapter 4 states -- okay.

CHAIRMAN APOSTOLAKIS: Can you give me the sentence in the rule --

MR. BARRETT: Yes.

CHAIRMAN APOSTOLAKIS: -- where it says you can do this?

MR. LAUR: Harry is going to give you the sentence any minute. He can probably find it faster than I can.

MR. BARRETT: Yes, it's in 4.1.

MEMBER STETKAR: Are you done?

CHAIRMAN APOSTOLAKIS: Go ahead.

MEMBER STETKAR: Thank you.

CHAIRMAN APOSTOLAKIS: On this subject?

MEMBER STETKAR: Related, yes.

CHAIRMAN APOSTOLAKIS: Because they are looking for --

MEMBER STETKAR: Oh, okay. I'm sorry.

MR. BARRETT: Section 4.2.2 states, "Selection of Approach. For each fire area, either a deterministic or a performance-based approach shall be selected in accordance with Figure 4.2-2," which is this flowchart here.

CHAIRMAN APOSTOLAKIS: Yes.

MR. BARRETT: Okay? And it says, "Either approach shall be deemed to satisfy the nuclear safety performance criteria. The performance-based approach shall be permitted to utilize deterministic methods for simplifying assumptions within the fire area."

So, basically, what they're saying is that Chapter 4 is where you determine which fire protection systems and features are required to meet the nuclear safety performance criteria, and you are allowed to either use a deterministic approach or a performance-based approach on a fire area basis.

CHAIRMAN APOSTOLAKIS: Well, then, we shouldn't have allowed that. I mean --

MR. BARRETT: Well, actually, I think what is happening here, what the rule is designed to do is essentially allow the use of 1.174 approval of self-approved exemptions essentially. In other words, if you had a perfectly compliant plant to Appendix R, it would meet 4.2.3, which is the deterministic rules in

805, you wouldn't need the performance-based approach, because it was fully compliant.

Where you have things that don't meet that deterministic rule is you are basically a risk-informed exemption that looks at the amount of risk for that deviation, and you are approving that particular deviation on a fire area basis, but --

CHAIRMAN APOSTOLAKIS: The rule doesn't say what is acceptable, does it?

MR. BARRETT: It says the AHJ, it has to be acceptable to the AHJ. In the appendix it says that we will use 1.174 for that criteria.

MR. LAUR: That's for the delta risk.

MR. BARRETT: Yes.

MR. LAUR: Now, the rule clearly states that compliance with the deterministic requirements is deemed to satisfy those performance criteria, so they are done. If they walk into a fire area, and it meets the deterministic requirements, they're done.

MR. BARRETT: That's right.

MR. LAUR: Now, the delta risk is judged to be -- delta risk is judged to be zero.

MR. BARRETT: But that risk needs to be added to the bottom line as far as the bottom of 1.174 for the total --

MEMBER RAY: But the issue here is: why did they do it area by area? Was that a conscious decision that would -- if you could help us understand why it was done that way.

MR. BARRETT: Because typically that is the way an Appendix R analysis is done. You analyze within the bounds of a three-hour rated barrier, so you say, "Well, everything in this room or this fire area gets burned up." So everybody's analysis is basically done on a fire area basis, so they said, "Well, all right. Fire area basis is the way you end up having to invoke this."

CHAIRMAN APOSTOLAKIS: Where is Regulatory Guide 1.174 mentioned in the rule?

MR. BARRETT: It's not in the rule; it's in the appendix.

CHAIRMAN APOSTOLAKIS: Which appendix, to the rule?

MR. BARRETT: Appendix A.

MR. LAUR: Appendix A to the standard, which is not officially part of the rule.

CHAIRMAN APOSTOLAKIS: Oh, to NFPA.

MR. LAUR: Of NFPA, yes.

CHAIRMAN APOSTOLAKIS: Okay.

MR. BARRETT: Which is not --

CHAIRMAN APOSTOLAKIS: Which is not the rule.

MR. BARRETT: Which is not part of the rule. It's like an SOC. It gives you guidance on what --

CHAIRMAN APOSTOLAKIS: It has to be acceptable to the authority having jurisdiction.

MR. BARRETT: Which is us, yes.

CHAIRMAN APOSTOLAKIS: And the authority having jurisdiction can say, "If you do it on a selected basis, you cannot use 1.174." You are the authority; you can say that. Let them cut their throat to figure out how they will make it acceptable. So you apply with the rule, and you also tell them, "Don't do it," because we cannot use Regulatory Guide 1.174.

MR. HARRISON: I think the issue you would have then is we would have to establish what kind of acceptance criteria the staff would use in that --

CHAIRMAN APOSTOLAKIS: Well, then, you have to do another Regulatory Guide 1.174 that says, "If you do it selectively, this is how we are going to make a decision." But you can't take an existing regulatory guide that has certain assumptions behind it and say, "Well, it doesn't really matter. We are

going to do it now for five of the areas, but the other 15 we're not." So as long as the regulatory guide is not in the rule, I'm happy, because you cannot use it.

MR. LAUR: But, George, just to clarify a couple of things here. We got this question at a public meeting a while back. You know, why do you think that 1.174 is the appropriate reg guide?

CHAIRMAN APOSTOLAKIS: Is or is not?

MR. LAUR: Well, the question is: why do we feel that it is? And especially in view of the fact that 1.174 did not foresee this particular application. It predated this application by a number of years. And while that's true, this application very clearly had in mind the acceptance guidelines of 1.174, not necessarily all of the other parts, but certainly the cumulative risk aspect was written in this rule.

In the appendix, they put the -- you know, 1.174 is a suitable framework, because it is risk-informed and has all of the attributes. In the regulatory analysis for both the proposed rule and the final rule, we said that 1.174 is what we plan to use, and in the Statement of Considerations we say that. So it was clear -- whether it matches up 100 percent,

it is clear that our intent all along was to use those acceptance guidelines.

CHAIRMAN APOSTOLAKIS: Well, yes, so -- but the intent all along was not correct.

MR. LAUR: Well, but Reg Guide 1.174 allows you to estimate risks from -- for instance, when you look at the total risk on the X-axis, you may not have a seismic PRA necessarily, but you can judge the magnitude of that to figure out where you are on the X-axis. And in any event, you are allowed --

MEMBER SHACK: Or else you limit your delta CDFs to the point where it doesn't matter where you are on the -- which is a more --

MR. LAUR: Right.

MEMBER SHACK: -- a more plausible approach.

MR. HARRISON: You can make the delta small enough that you just --

CHAIRMAN APOSTOLAKIS: The question is: how do you make it small enough?

MR. HARRISON: Well, again, that's in the guidance. That's in Reg Guide 1.174. It says it.

CHAIRMAN APOSTOLAKIS: No. In this particular application, you can choose not to do a risk evaluation for a number --

MR. HARRISON: Right.

MEMBER SHACK: If he does it for one area, he is bound by the 1.174. If he does it for two areas, he has to sum the risk.

CHAIRMAN APOSTOLAKIS: Yes. But he selects which areas he is going to do it to.

MEMBER SHACK: But he still -- his total delta, since he is -- his delta is being calculated between the deterministic model and the risk-informed model, he has got the total delta that he is required to have by the rule.

MR. HARRISON: Yes, we will get the delta, because for those areas where they -- if a licensee chose not to do the fire PRA for the whole plant, and they did it room by room, for those areas that are in deterministic compliance the delta is, by default, zero, because you need compliance.

CHAIRMAN APOSTOLAKIS: That's my point.

MR. HARRISON: Well, there's a fire risk, but that's not a delta risk, because it is in both sides of the equation. Deterministically, you are not -- got a delta from the deterministically-compliant plant, because you are deemed to be in compliance, deterministic compliance. There is no delta. There may be a fire contribution, but there's not a delta

contribution.

CHAIRMAN APOSTOLAKIS: But in areas where there is no compliance --

MR. HARRISON: Well, in an area where he goes to the alternate performance path and uses fire modeling, what he ends up doing is making that delta, if you will, epsilon, because the way they do fire modeling is you essentially burn up the room, and you show there is no -- go ahead.

MR. BARRETT: You use fire modeling tools to assure yourself with a high confidence that you are not going to damage both trains.

MR. HARRISON: Right. So you have a fire in the room, and even though you may have a B train and an A train room, that -- it can't be affected by the fire that you have in that room. So --

CHAIRMAN APOSTOLAKIS: Yes, you know, but I am at the mercy of --

MR. HARRISON: Therefore, it is an epsilon delta.

CHAIRMAN APOSTOLAKIS: -- you are going to use for these other areas. I mean, have the pilots faced such a situation?

MR. LAUR: For fire modelings or --

MEMBER SHACK: It is an area by area, I

think is what --

MR. HARRISON: Even the fire PRA is done area by area. So --

CHAIRMAN APOSTOLAKIS: No, that's fine.

MR. HARRISON: -- but you're asking, have the pilots done a selected implementation?

CHAIRMAN APOSTOLAKIS: Have the pilots done deterministic evaluation for some areas and risk for other areas?

MR. BARRETT: Yes, because that's what the rule says they should do. That's the way the rule is constructed,yes.

MEMBER RAY: Should do or can do?

CHAIRMAN APOSTOLAKIS: Can do.

MR. BARRETT: They have calculated a risk for each fire area, and they calculated delta risk for those things that are non-compliant.

CHAIRMAN APOSTOLAKIS: Which is my point, because that's the way it ought to be done.

MR. BARRETT: That's the way they did it.

CHAIRMAN APOSTOLAKIS: The question I have is: has anybody done some areas using risk, some other areas not using risk?

MR. BARRETT: Yes, the pilots have done that as well. They have calculated a risk for the

areas where they have done deterministic compliance, but they have calculated a risk for that area. So they know the risk of the area, but they don't have a delta risk, because they are in compliance.

MR. HARRISON: But they have a baseline risk number for that one.

MR. LAUR: George, both the pilots have a full plant fire PRA. It covers the entire plant, all fires.

CHAIRMAN APOSTOLAKIS: Oh, both --

MR. LAUR: Both plants have that.

MR. HARRISON: They are not doing the selected where they are --

CHAIRMAN APOSTOLAKIS: Not doing what I am objecting to.

MR. HARRISON: Right.

CHAIRMAN APOSTOLAKIS: They are --

MR. BARRETT: Well, in the early development of the reg guide and 04-02, the concept a change evaluation PRA was out there, where you would build a PRA that was only really focused on the areas where you were non-compliant. No one has chosen to do that that I know of, but the concept was always that you should be able to do that.

MR. LAUR: And the burden in the reg

guide, the burden -- or I should say the barrier to that in the reg guide -- even though the reg guide is guidance -- I mean, it can take exception, but -- is the fact that we invoke Reg Guide 1.200 for the technical adequacy, which refers to the PRA standard, which has all kinds of requirements in it that if you just did one room -- let's say you had one room and you did a risk -- basically a PRA on the room, you would have a very hard time meeting some of the requirements across the board in a standard, because they have to do with the risk profile, the uncertainty analysis.

They span -- you know, have you determined the initiating events? We could say, "Well, yes, for one room." I don't have the standard memorized, but the standard would tend to make you have a holistic PRA for the site, not for a room.

CHAIRMAN APOSTOLAKIS: So I think we have exhausted this. I mean, you had a comment?

MEMBER STETKAR: Yes.

CHAIRMAN APOSTOLAKIS: Go ahead.

MEMBER STETKAR: Thank you. I am fearful. It is somewhat related to this, but in a little bit different spin, and that is that the rule requires -- I quoted it -- "assurance that a fire during any

operational mode or plant configuration will not prevent the plant from achieving and maintaining fuel in a safe and stable condition."

So the rule requires an evaluation of the fire risk for compliance, depending whether doing a deterministic or a risk-informed evaluation during all plant operating modes. How are people complying with that requirement for shutdown operating modes where in practice nobody has a shutdown risk assessment? That's a question, maybe the pilots can elaborate on that one when they come up.

What I'm curious about is I'm assuming they're using some type of ad hoc qualitative discussion.

MR. LAUR: Yes.

MEMBER STETKAR: Does the reg guide -- how then -- suppose they do that, they justify the transition and that the risk is acceptable after the NFPA 805 transition. And now we are in a new baseline risk arena. How do licensees then justify changes to a fire protection program that may affect the risk -- the fire risk during shutdown and not necessarily have the same delta risk impact during power operation? Follow my question?

MR. LAUR: Right.

MEMBER STETKAR: Because we don't have now a baseline risk evaluation for shutdown. All we have is a qualitative justification that the transition is okay.

MR. LAUR: Let me explain what is --

MEMBER STETKAR: And the underlying question is: does the reg guide provide a disincentive for people to develop full-scope fire risk analyses for shutdown modes, because they basically can skirt that issue through some type of continuing qualitative justification? That's really where I'm coming from.

MR. BARRETT: Let me explain what they're doing right now. Okay? What the reg guide does is endorse 04-02, and 04-02 has a qualitative method to address non-power operating conditions.

Okay. And what that method does is essentially uses the same analysis tools for the deterministic side. You identify all of the components you need for your key safety functions -- decay heat removal, inventory control, monitoring. It ends up tracing all of those cables, locating them in the plant, and it essentially does the same fire area type damage assessment. Okay?

But then, they take that information and

they use it to develop qualitative tools to reduce fire risk when there is a chance that, you know, the worst case is going to happen where let's say you end up being at mid-loop and you've got very short time. They're going to end up putting actions in place to minimize the fire risk in those areas where the choke points are, where you could lose all of your -- all of the means of providing a key safety function. Let's say it's decay heat removal.

In that high-risk evolution, you are going to end up having fire watches. You are going to have additional fire detectors. You are going to reduce combustible loading, whatever. They use a variety of means, which may change on an outage basis, because each outage is different. Okay?

And they basically end up having to custom-develop that on an outage basis, because they have different components that are out of service, different high-risk evolutions. So it has to be tailored to the outage. but, in essence, they are doing that analysis uniquely each outage.

MEMBER STETKAR: I understand that. In the context of George's earlier question, let's take a particular fire, this fire area that we are sitting in. And the licensee has determined that that fire

area is not in compliance with the deterministic criteria. So, therefore, they must invoke a risk-informed basis for --

MR. BARRETT: Right.

MEMBER STETKAR: -- acceptability of this fire area.

Now, I'm assuming that the mitigation activities that you are describing -- fire watches or reorganizing outage schedules or, you know, whatever they do -- is that considered, within the context of the rule and the reg guide, a deterministic compliance approach? Or is it considered to be a risk-informed compliance approach?

MR. BARRETT: I would call it performance -- it is a qualitative performance-based approach.

MEMBER STETKAR: Performance-based, so it's --

MR. BARRETT: So it's non-compliant to deterministic rules, because you can have a fire area where there is a pinch point and you can lose all of the key safety function. The way they are addressing that is they are taking additional fire protection defense-in-depth actions to reduce fire risk during the limited times where it would be critical.

MEMBER STETKAR: But they are not

quantifying that reduction in the risk.

MR. BARRETT: No, they are not.

MR. HARRISON: But that approach would be consistent with what Reg Guide 1.174 does right now in a risk-informed application. If you don't have something that is modeled that it would affect shutdown, you would invoke -- there is discussion in the reg guide about shutdown and the questions you asked to satisfy yourself with that. So it is consistent with that approach.

MEMBER STETKAR: That helps me kind of think through it. Thanks. Let's move on, because there are other issues.

CHAIRMAN APOSTOLAKIS: Well, I still don't have a sense of whether people feel that doing, you know, risk evaluations of selected areas is a reasonable thing to do.

MEMBER RAY: I think you need --

CHAIRMAN APOSTOLAKIS: Is it reasonable? Or do we want to discuss it at the end of the day?

MEMBER RAY: Well, before you -- you are talking about the cherry-picking again.

CHAIRMAN APOSTOLAKIS: The cherry-picking.

MEMBER RAY: It seemed to me when I -- at first the answer was we were required to do it, but

the rule -- you put your lawyer hat on and proved that wasn't true, that we didn't have to do it because 1.174 is in Appendix A, not in the rule.

So then the discussion seemed to go in a the direction of -- but it doesn't -- hasn't happened. Nobody has done it. And that kind of led off into the fog, as far as I was concerned. It would seem like we ought to -- it sounds like everybody at the table here would be concerned if cherry-picking actually occurred. I'm not sure whether we resolved that it is permitted by the rule, and we have to leave it that way because of what the rule says or not. That discussion kind of trailed off I thought and didn't come to any clear conclusion.

George, perhaps I should ask you, where do you think it ended up? Did you win the argument that it is not required by the rule because you can set criteria different than 1.174?

CHAIRMAN APOSTOLAKIS: The lawyerly argument would be the rule allows you to do it, but the rule doesn't tell you what is acceptable, and that's where you --

MEMBER RAY: That's what I mean.

CHAIRMAN APOSTOLAKIS: Yes.

MEMBER RAY: That you don't have --

CHAIRMAN APOSTOLAKIS: Right. You don't have to accept it.

MEMBER RAY: Okay. Then, I think we should be concerned about it, to answer your question.

CHAIRMAN APOSTOLAKIS: I am willing to be convinced otherwise, by the way. I am not looking for trouble here, but --

MEMBER STETKAR: I guess I am not as troubled, as long as I hear people saying that the AHJ, meaning the agency, is ultimately responsible for accepting the delta risk, and that they are saying that indeed you need a risk assessment that includes all of the areas in the plant, regardless of whether they are justified as being compliant on a risk-informed basis or being compliant on a deterministic basis.

CHAIRMAN APOSTOLAKIS: I didn't hear them say that.

MEMBER STETKAR: I thought I heard them say that.

CHAIRMAN APOSTOLAKIS: No. They said that's what -- no pilots have done it otherwise.

MEMBER STETKAR: That's what is being done, and the --

CHAIRMAN APOSTOLAKIS: But they didn't

say, "If they did it in a different way, we would not accept it."

MEMBER STETKAR: Right.

MR. HARRISON: And the PRA guidance documents, like Reg Guide 1.200 on PRA technical adequacy, it would tend to drive you to have to have a full scope, full plant fire PRA.

MEMBER RAY: I know, but either this is a problem --

MR. HARRISON: You need a high-quality PRA, because that is where you --

MEMBER RAY: Either it's a problem or it's not a problem. I mean, if the argument -- I'll point over here to Steve -- is that, well, look, really, when you look at this in its totality, you are not going to -- you are not going to do this. Then, are we talking about something that we may as well not allow? Or are we obliged to allow it? And if we are obliged to allow it, I just -- I don't know where you guys stand on that subject. I'm going to call it cherry-picking. I'm making it simple.

MR. LAUR: I'm probably being quoted accurately, but I am going to have to change what I said, I don't know. But the rule -- the term "cherry-picking," in my understanding, is not allowed and is a

different use of the word. It has to do with mixing the two regulations. You either go 805 or -- now you're talking about within 805, can you cherry-pick between deterministic, risk-informed, and fire modeling? And the answer is yes. The reg guide allows it, the rule allows it, and we support that.

Now --

MEMBER RAY: Why?

MR. LAUR: Well, because a plant can come in with a complete deterministic requirements met, and that is perfectly acceptable and there are no risk numbers at all.

MR. HARRISON: And there is no fire PRA.

MR. LAUR: And there is no fire PRA. They don't need it.

CHAIRMAN APOSTOLAKIS: But not what --

MR. LAUR: Now, what you're saying is, "I have a plant, and they have one fire area and one variance." And they said this, "Why should I move that? Nobody else is moving their cable." So they do a -- it looks like -- exactly like a PRA. This has one scenario, one source, one cable, and the delta risk is one times 10^{-8} per year. You say, "Please approve this."

Well, we can judge, based on whatever

inputs we have, that $1E^{-8}$ is less than $1E^{-6}$, and it doesn't matter where the total risk is on there. We need to look at the entire package, and we can approve that. And they just cherry-pick in your definition, but it's not a big problem.

CHAIRMAN APOSTOLAKIS: If it were 10 -- three 10^{-6}, in that area --

MR. LAUR: Right. And then we are going to say, "Gee, what is your total risk?"

MEMBER BLEY: I think the answer is where Donnie was, and that's why I'm not so concerned, is -- if they can't do a PRA for that room, if they are going to use risk in that room, they have to do a PRA. If they have to do a PRA, they have to meet 1.200. And if they have to meet 1.200, they can't have a PRA that doesn't include the whole plant.

CHAIRMAN APOSTOLAKIS: But Steve just said they can.

MEMBER SHACK: If you want three times 10^{-6}, you need a total risk, which means you need everything. You need to fix yourself on the X-axis with --

CHAIRMAN APOSTOLAKIS: You can say, "If it's three 10" --

MEMBER SHACK: That's not what it says.

That's 1.174 criteria. If you want deltas that large, you have to locate yourself on the X-axis.

MR. HARRISON: At the end of the day, if the licensee proposed that, they can propose that, and we would have to review it. Now, if they came in a $3E^{-6}$, and it's one room, we could look at that, and we could decide that, you know, that's okay. But that is -- again, that comes back to the authority having jurisdiction.

We could also in that context use Reg Guide 1.174 and say, "Fine. Now, tell me what is your total fire risk and your total internal events risk, and your total seismic risk. Give me all of that information, so I have confidence that you are not approaching an area where that is not allowed."

CHAIRMAN APOSTOLAKIS: Is it possible to go back and put the right words in that paragraph there? And instead of having a blanket statement that, you know, the risk is acceptable, put some of these thoughts there? I'm not saying that, you know, you guys are going to go blindly and say, "Oh, they did this. It's three 10^{-6}, it's acceptable."

The guide should reflect this kind of thought process, that, you know, if you are in a certain range, then having the CDF and the LERF is

very important. Otherwise, you cannot use the guide. If it's 10^{-8}, Steve, I would go along. Yes, sure, it doesn't matter where I am.

So there is some intelligent application of the guide there, which doesn't come across by reading the words. And, actually, you know, another thing that bothers me is that I press the point here that we come up with intelligent answers. I mean, it is not -- I don't like that. I don't like being here in this room and answering these questions. You see, what is -- what is the best way to make him shut up? That's not the way to do it.

MR. WEERAKKODY: Yes. This is Sunil Weerakkody again.

CHAIRMAN APOSTOLAKIS: I've been here for 15 years, amigo.

MR. WEERAKKODY: Yes.

CHAIRMAN APOSTOLAKIS: Okay.

MR. WEERAKKODY: Dr. Apostolakis, I --

CHAIRMAN APOSTOLAKIS: You can call me George, Sunil.

MR. WEERAKKODY: Okay.

CHAIRMAN APOSTOLAKIS: I call you Sunil.

MR. WEERAKKODY: Okay. George, let me make a couple of positive statements or assertive

statements, and then come back to you as to how we would address this issue.

Number one, we do not know of any plant that is adopting 805 without doing a full fire PRA at power.

CHAIRMAN APOSTOLAKIS: This is music to my ears.

MR. WEERAKKODY: Yes.

CHAIRMAN APOSTOLAKIS: I mean, that -- I love that.

MR. WEERAKKODY: Not only that, from the inception of the rule, over the last four years we have told the industry over and over again, "Don't go to 805, unless you are doing a fire PRA. You are wasting your resources." And you could pose this question to NEI because --

CHAIRMAN APOSTOLAKIS: Very true.

MR. WEERAKKODY: All right. Number three, you know that since you bring up this issue pretty much in these meetings, why don't I and the staff maybe during the break take a look back and see, come back to you.

CHAIRMAN APOSTOLAKIS: This is good. I thought you were going to come up with something that --

MEMBER SHACK: George, they do refer you to the two regulatory positions, which --

CHAIRMAN APOSTOLAKIS: Where are you?

MEMBER SHACK: -- make it clear in the sentence that bothers you. I mean, you found the one sentence in here that talks about acceptance criteria that doesn't have --

CHAIRMAN APOSTOLAKIS: Can you tell me where it was?

MEMBER SHACK: Just before 2.2.1, "For each fire area."

CHAIRMAN APOSTOLAKIS: Yes. Okay. We'll find it. Just before 2.2.1.

MEMBER SHACK: 4.1, 2.4.1

CHAIRMAN APOSTOLAKIS: Oh, 2.4.1.

MEMBER SHACK: 2.2.4.1.

CHAIRMAN APOSTOLAKIS: 2.2.4.1.

MEMBER SHACK: There's too many numbers there.

CHAIRMAN APOSTOLAKIS: Yes, yes. So that's in -- okay. The risk evaluations, right?

MEMBER SHACK: Right.

CHAIRMAN APOSTOLAKIS: Okay.

MEMBER SHACK: No, no. 2.2.4.1. You're in 2.4.

CHAIRMAN APOSTOLAKIS: 2.2 --

MEMBER STETKAR: On page 8 of the PDF file.

CHAIRMAN APOSTOLAKIS: What page?

MEMBER STETKAR: Page 8 of the PDF file.

CHAIRMAN APOSTOLAKIS: Okay. That's where I was.

MEMBER STETKAR: About two-thirds of the way down.

CHAIRMAN APOSTOLAKIS: I am on page 8. Let's find that offending sentence. It's up here.

MEMBER SHACK: There is the offending sentence.

CHAIRMAN APOSTOLAKIS: "For each fire area," okay.

MEMBER SHACK: "Should be acceptable as described in Regulatory Position 2.2.4.1." And if you come to 2.2.4.1, you will find it goes through the regulatory guidance in 1.174.

CHAIRMAN APOSTOLAKIS: Well, let's find that, because that's where -- yes, 2.2.4.1.

MEMBER SHACK: And 2.2.4.2.

CHAIRMAN APOSTOLAKIS: Where is the -- oh, here it is. "If the release is greater than the acceptance guidelines in Regulatory Guide 1.174," on

page 9 of the PDF.

Okay. Now, as Sunil says, we need a sentence here to protect us from an abuse of the guide.

MEMBER SHACK: What you just said -- there is a sentence right there.

CHAIRMAN APOSTOLAKIS: Where? Where is it? "In this case, the NRC will normally approve risk increases. If this total risk increase exceeds the acceptance guidelines" -- tell me how that sentence --

MEMBER SHACK: Well, it says, "Has to meet 1.174," and then you go to 2.2.4.2 and you have to sum up things from all of the fire areas, and that has to meet 1.174.

CHAIRMAN APOSTOLAKIS: But this is from the areas you have evaluated.

MEMBER SHACK: But, again, if the delta is only between --

MEMBER STETKAR: This is for the transition.

CHAIRMAN APOSTOLAKIS: Yes.

MEMBER STETKAR: It is not for the post --

CHAIRMAN APOSTOLAKIS: For the transition, yes.

MEMBER SHACK: But the delta is between

the deterministic model and the risk model. Therefore, for any area where you haven't used risk, the delta is zero. So when you are summing up the delta, the only delta contributions you get are from the fire areas.

MEMBER STETKAR: You might find later that the total risk -- the absolute risk from a fully deterministic compliant fire area is higher than you'd like.

CHAIRMAN APOSTOLAKIS: Is there any way you can add a sentence in this paragraph --

MEMBER STETKAR: But the delta is zero.

CHAIRMAN APOSTOLAKIS: -- that says -- but that's not the only driving force in the regulatory guide. If it's three 10^{-6}, as Bill said, then you really need the CDF.

MEMBER SHACK: Yes. But as Donnie says, they look at this on a case-by-case basis.

CHAIRMAN APOSTOLAKIS: And what's wrong with saying something here that the total CDF, even -- you know, in one case you don't have to have a PRA, right? But in cases where the delta risk exceeds 10^{-6}, then you must have it. You must have the CDF and LERF.

MR. LAUR: All right. I've actually -- I

believe --

CHAIRMAN APOSTOLAKIS: It doesn't say that.

MR. LAUR: We wrote that in the standard review plan -- I believe it's in the version you have -- for the staff to look at and say, "Hey, if it's more than $1E^{-6}$, you need to get the total risk. If it's more than $1E^{-7}$, or if you need the total" --

CHAIRMAN APOSTOLAKIS: So can you also say it here?

MR. LAUR: No, we don't say it here. What we're trying to do here in a couple of places -- 1.174 was one, and Reg Guide 1.200 was another -- we were trying to simplify by pointing to existing guidance as appropriate, or as we deemed appropriate, to basically say -- when it says "the authority having jurisdiction," we said, "We have already decided these issues."

And as Donnie pointed out, we are very well aware that we need to know the X-axis. In fact, that's one of the contentions with industry kind of outside this forum, or it has been presented at this forum, but kind of outside this reg guide, you know, is total risk, or why can't you do it on, you know, hazard group by hazard group?

We are all painfully aware that there is an X-axis there. We didn't think we needed to say it. I think it -- I personally feel it is clear.

MEMBER SHACK: George, I mean, I think the problem with yours is you are trying to summarize 1.174 in one phrase or one sentence, and that's why you have a reg guide. It's more complicated than that.

CHAIRMAN APOSTOLAKIS: No. What bothers me is this selective application of risk assessment. That's what bothers me. And this refers only to that document. If I read the whole paragraph, all it talks about is that document, as if that is the criteria.

MR. BARRETT: How is that any different than we imply in 1.174 right now? The only time you end up looking at a delta is when you have something you are requesting to use a performance-based approach to approve. The other things in the plant are all compliant.

CHAIRMAN APOSTOLAKIS: Wait, wait, wait, wait. What do you mean "right now"? In other areas?

MR. BARRETT: If I came in with --

CHAIRMAN APOSTOLAKIS: On Fire?

MR. BARRETT: -- a risk-informed amendment unrelated to fire -- let's say I ended up having

something you are trying to risk-inform that doesn't meet the regulations -- and that one item you are asking for 1.174 approval on. You are not second-guessing all the rest of the stuff that is compliant with this plant.

CHAIRMAN APOSTOLAKIS: Or still meet the CDF.

MR. BARRETT: Yes, you need the CDF, but the thing is, you are not looking at a delta for -- the reason why we wouldn't ask for a delta for the fire areas that are compliant with the deterministic requirements is because that is like the rest of the plant in a normal risk-informed amendment. You wouldn't be second-guessing compliance with everything else, only the thing that you are asking for risk-informed approval on.

MR. HARRISON: Yes. I think George's issue is the total CDF.

CHAIRMAN APOSTOLAKIS: The total CDF. This sends the message -- this whole paragraph -- that what matters is the delta. And if the delta is large enough, then the CDF matters. All it takes is one sentence to fix it.

MR. WEERAKKODY: Why don't we take that back and during lunch we can discuss it.

CHAIRMAN APOSTOLAKIS: This is on page 9.

MR. WEERAKKODY: As long as, you know, a sentence does not -- goes beyond the envelope of the rule.

CHAIRMAN APOSTOLAKIS: Okay. Sunil found a solution. So what else?

MR. LAUR: We are on the second bullet. I told you this would be a quick presentation.

(Laughter.)

MEMBER RAY: This is going smoothly here.

MR. LAUR: Okay. The second major thing is a sample license condition. If you remember from our last meeting, and maybe even the June 1st meeting, we made a major revision to the sample license condition over the last reg guide.

One thing we added was a transient -- set of transient license -- excuse me, transition license conditions that if a plant asks to be granted an 805 license, but is not complete with, say, modifications that are going to be installed in the next outage, we can do that, but those are important enough we are going to put them in a license condition.

Well, in the course of revamping license condition, the stakeholder said that we had either inadvertently or on purpose removed the ability to do

changes, risk-informed changes, during that period between granting of a license and full implementation.

And we actually did intend to not allow that -- the PRA base, the risk-informed changes using the PRA during that period. But we did not mean to preclude minor changes that are allowed today or similar to what would be allowed over 50.59, except for the equivalent or corresponding provisions for a fire protection program.

And so it turned out we had already endorsed this in NEI 04-02. There is a screening process for making these minor changes. And what we did was we put words that said, "Okay. You are allowed to make self-approved changes that have no more than a minimal risk increase during that period." Actually, you can do that any time, but in particular during the transition period. So we changed the word.

A little bit later I will come back to this. The industry commented that the way we wrote it doesn't seem to do what we thought it would do. I believe it actually does, but, if necessary, we can move the words around. That would be an administrative change.

But the intent is, at any time after they have been granted the license, they can make changes

that have no more than a minimal risk increase.

The third bullet -- risk of previously-approved recovery actions -- we can talk about that again to the extent you would like. But one of the comments we heard at the last ACRS meeting was, "Please put the figure into the document," and we did. We have not changed that figure.

What we are basically saying is that if you have a fire area where previously-approved recovery actions would -- they were previously approved, so they are acceptable, they are deemed to be acceptable, the acceptance criteria is the previous approval, unless you trigger the backfit or something. But that risk does count in making any other changes during transition to that room.

MEMBER STETKAR: That figure and the changes in the text really clarify the intent. That's --

MR. LAUR: It may not seem like it, but we do listen. And I hope you will -- I hope you realize that on the next bullet.

(Laughter.)

You're on a high right now.

CHAIRMAN APOSTOLAKIS: Why pick on previously-approved recovery actions? It is not clear

to me -- if there are other changes that have been previously approved, they are left alone. But if it's recovery actions, you have to calculate that risk. What is the logic?

MR. BARRETT: Okay. The logic is that the standard is very explicit about wanting the delta risk to --

CHAIRMAN APOSTOLAKIS: And you could disagree with the standard. You have already disagreed. We have established that. You have disagreed with them. They state that the deviations from the fundamental elements should not be evaluated using risk, and you say, "No, you can't." So you have disagreed.

MR. LAUR: Oh, we can disagree with the standards.

CHAIRMAN APOSTOLAKIS: You disagreed here as well.

MR. LAUR: No. There's a difference. We disagree with the standard in the rule that was issued on an example you gave. We say, "Notwithstanding the prohibition in Chapter 3" --

CHAIRMAN APOSTOLAKIS: Yes.

MR. LAUR: -- for whatever --

CHAIRMAN APOSTOLAKIS: Right.

MR. LAUR: You can use them, if you submit a license amendment and meet a bunch of requirements. That's a little different than us trying to write a reg guide that disagrees with the rule. We can't do that. We have to go over --

CHAIRMAN APOSTOLAKIS: So the rule again says that you have to consider the recovery actions and -- where does it say that?

MR. HARRISON: The rule did not take an exception to the standard to that paragraph. Therefore, that paragraph is the rule.

MR. LAUR: It says if you use recovery actions to ensure the -- or demonstrate the availability of a success path, you shall use the performance-based methods. That's what it says.

MR. BARRETT: And calculate delta risk.

MR. HARRISON: And the additional risk associated with those actions.

CHAIRMAN APOSTOLAKIS: And we all have a common model that we all understand for calculating that risk? Do we all have, you know, a model that says, you know, in human reliability this is what you do? Or is somebody going to come and say, "I use the EPRI" -- what do they call that?

MR. HARRISON: The EPRI calculator.

CHAIRMAN APOSTOLAKIS: EPRI calculator. That gives me three or four options. I use option number 2. The other guy comes and says, "No, no, no. I use ATHEANA." Another guy comes and says, "Well, gee, you know, the SPAR-H model is pretty good. I'm going to use that one." And --

MR. HARRISON: And there is work going on in Research for fire HRAs as well, so --

CHAIRMAN APOSTOLAKIS: And I can use that deterministic -- the time window, right, or not? No, no, no. That would --

MR. HARRISON: No. You would still have to have that --

CHAIRMAN APOSTOLAKIS: Yes.

MR. HARRISON: You couldn't just --

CHAIRMAN APOSTOLAKIS: So, yes.

MR. LAUR: That is outside the scope of our reg guide.

MR. HARRISON: That is consistent with what we do on all the risk-informed applications.

CHAIRMAN APOSTOLAKIS: So what do we do? We don't have a model, and yet we are requiring a calculation of delta risk.

MR. BARRETT: And we are requiring an evaluation of the --

MR. HARRISON: And we would review that part of the submittal to ensure that we are -- we find that method acceptable for its use.

MR. LAUR: But the -- just one point of clarification. That when we say "non-human reliability actions," we accept those that are previously approved, but the recovery actions we don't. As Harry pointed out, the rule is pretty explicit in both directions. There is a paragraph that allows us to accept -- this 2.2.7 that says, "The licensee, when using the deterministic approach of Chapter 4, is allowed to take credit for these." Pretty much the previously-approved things are called "engineering equivalency evaluations."

And if we previously approved it, we have determined that it meets an equivalent level of fire protection. In the case of the recovery actions, as Harry pointed out, it is explicit that you cannot deem that that meets the deterministic. You have to go performance-based.

CHAIRMAN APOSTOLAKIS: So did the actual rule take exception to these fundamental elements?

MR. LAUR: No.

MR. BARRETT: Well, the rules, yes. In 3.1, the rule basically said, if you want to change

anything that is in the fire protection fundamental program elements, you have to come in and ask for AHJ approval.

CHAIRMAN APOSTOLAKIS: No. But does it say -- I know NFPA 805 says that you cannot deviate from the fundamental elements.

MR. BARRETT: Yes.

CHAIRMAN APOSTOLAKIS: Okay.

MR. BARRETT: And then we took exception.

CHAIRMAN APOSTOLAKIS: But the rule says, "No, we take exception to that?"

MR. BARRETT: Yes.

CHAIRMAN APOSTOLAKIS: The rule says that.

MR. BARRETT: Yes.

MR. HARRISON: But in the area of recovery actions, there is no exception to what they need to do.

CHAIRMAN APOSTOLAKIS: Right. Right. So it is going to happen, what we have in power uprates, that the licensees will pick the EPRI models, they will come here and say it's 10^{-5}, and the staff will say that's okay.

MR. LAUR: Well, once again, what we're looking -- if they use fire risk evaluation, we are looking for a delta risk, not a delta human error

probability. We're looking for the delta risk. I mean, obviously, it is going to be factored over whatever the human error probability is, but it -- and we will evaluate that when we receive their license amendment request.

But we are looking at, what would the scenario be if you didn't have to have that recovery action, if you had protected the --

CHAIRMAN APOSTOLAKIS: Right. So one side of the calculation will not involve any human --

MR. LAUR: Right.

CHAIRMAN APOSTOLAKIS: -- activities --

MR. LAUR: That's right.

CHAIRMAN APOSTOLAKIS: -- using other models, and the other side will use some human reliability model.

MR. LAUR: Right. And we can always ask for the -- we can always ask for sensitivity analyses, and the standard -- if that ends up being a key result, then the human error probability becomes a key assumption that we would expect to have some sort of evaluation of the uncertainties.

CHAIRMAN APOSTOLAKIS: Well, I don't think we are going to reach any resolution to this.

Okay. So keep going.

MR. LAUR: Primary control station. Now, I know you are going to ask me about this valve. Okay. And we think we have --

MEMBER STETKAR: I will let you finish.

(Laughter.)

MR. LAUR: I almost drew a picture of an MOV.

MEMBER STETKAR: I wish you had, but go on.

MR. LAUR: I couldn't think of how to do it without -- okay. This is slightly different than what we presented at the August 18th meeting. And basically what we -- I think there was a comment as we were going out the door, or maybe during your roll-up somebody said, "I don't know why you don't just define it to be the primary control station is this other place that has been defined to be that way." So we did.

At our stakeholder meeting on September 10th, the stakeholders said, "You know, that's ambiguous." And it's ambiguous because there are apparently scenarios where people will go out and use this equipment in what appears to be a recovery action. In other words, it didn't evacuate the control room or transfer command and control. You

just say, "Well, here is a piece of equipment." And so we factored in how they use it as well.

In other words, if you are shifting command and control from the main control room to either the alternative shutdown or a dedicated shutdown, then that is the primary control station, including the actions necessary to -- if you have built-in transfer switches over there, that counts. The decision to evacuate, that counts.

Those are all not recovery actions, because they are the NRC reviewed and approved III.G.3 way of complying. And it fills that -- some people thought there was a hole in the standard, but actually it really isn't, if you interpret it this way. There is a control -- there are two control rooms. There is a big one and a small one or a distributed one if it's dedicated.

And so we have these extra rules. If it's an alternative, they can't be distributed. It has to be more than one control. That is where the primary command and control goes, and sufficient instrumentation that you can reach a stable state.

MEMBER STETKAR: I understand that part. And in the revised reg guide there are two cases elaborated. What you have just described is Case B in

Section C.2.4.

The concern that I have is Case A -- it says, "The first case involves controls for a system or component specifically installed to meet the dedicated shutdown option in Section III.G.3 of Appendix R." NRC staff considers the operation of this equipment as taking place at a primary control station.

Now, I'll come back to my example of the valve that does not have a switch in the main control room. It only has a switch at a panel that is located in the basement of the turbine building. Let's put it in the auxiliary building, the basement of some other building, some other location.

Now, I don't know whether that switch was installed specifically for Appendix R or whether that switch was in the original plant design and it just happens to be the only place where that switch it. But it is not in the control room.

The valve itself is physically 20 feet from the control room. If the operator must either leave the control room or send another person to that switch, to operate that valve to mitigate the consequences of a fire, is that action considered to be a recovery action?

MR. LAUR: Okay. There's a couple of -- you said to mitigate the consequences of fire. But the first --

MEMBER STETKAR: I'm using the wrong --

MR. LAUR: No, no.

MEMBER STETKAR: -- to meet the acceptance criteria according to the regulatory guide.

MR. LAUR: Well, in other words, for this particular fire scenario that we are postulating, is affecting this particular valve that is otherwise credited as the success path. In other words, had the cables been protected from that fire -- this is the success path. It is not some other piece of equipment you don't need, or it is not fire damaged equipment. It is the other train that is being affected.

So the answer is, yes, that would be a recovery action, in the scenario you just gave, because it is -- he didn't cover whether or not this is the dedicated or whatever. But let me back up. The dedicated shutdown --

MEMBER SHACK: This is not the dedicated shutdown panel.

MR. LAUR: Right.

MEMBER STETKAR: This is a local control station --

MR. LAUR: Yes. So it's a recovery action.

MEMBER STETKAR: It's where you normally --

MR. BARRETT: There are some subtle differences that I think we need to talk about. Typically, the type of thing that has been put in as a dedicated would be like a blackout diesel. It was put in for Appendix R, and the only time you ever use it are either Appendix R or station blackout, and that is a dedicated safe shutdown component. And you operate it from, let's say, the control panel for the blackout diesel.

MEMBER STETKAR: Okay. Let's take that as an example.

MR. BARRETT: And that ends up being part of your dedicated shutdown philosophy that you got approval on for Appendix R. There would not be a recovery action.

MR. HARRISON: Well, the first question you have to ask -- we are going to go around, do all three. The first question you have to ask is: are you shifting command and control?

MEMBER STETKAR: And the answer is, no, you're not.

MR. HARRISON: If you don't --

MEMBER STETKAR: Not for the rest of the plant, but this is the only place that you can operate that piece of equipment.

MEMBER SIEBER: Other than the control room.

MEMBER STETKAR: No, no, you cannot operate it in the control room. Don't get me into Case B now. I want to stick with Case A, which is not abandoning the control room, not going to your emergency or alternate shutdown control panels where you have large-scale control of many systems in the plant. I am talking about either a single dedicated system or a single dedicated component.

MR. LAUR: Actually, before you answer the question --

MEMBER STETKAR: That has a control panel.

MR. LAUR: -- let me give you a higher-level answer, and that is similar to other things you have heard in other reg guides, this is a very complicated -- it's a complicated definition. Okay? And so what we have done in our regulatory guide, which is one way that we find acceptable, is when we came down with these kind of decisions, we chose something that makes sense for the vast majority of

situations we can think of.

In other words, a typical plant will have an alternate shutdown panel, which is separated by some sort of barrier from the rest of the thing, and that's where they go. Okay? And the last little question we had at the public meeting involved, "Well, what if I send one guy down there to operate something while we are still up in the control room?" We said, "That wasn't the intent of what we are looking at."

So on a case-by-case basis, a licensee can say, "We are taking exception to that position, because this dedicated shutdown diesel was strictly for Appendix R. It's the only place it can be operated. And we can evaluate that and decide whether or not they have to assess the additional risk."

MR. BARRETT: It's going to have to be on a case-by-case basis.

MR. LAUR: But on the other hand, assessing additional risk for that is not -- there may be some contrary opinions in the room, but is not that onerous. In other words, if you maintain control in the main control room, now you have split your command and control. This guy is starting a diesel.

MEMBER STETKAR: I am not -- let me back up again. You are trying to draw me into -- you know,

out of my original question. Let's take the Appendix R diesel rather than my example of the valve with the handwheel outside the control room, so that we can deal in an area that perhaps is more familiar.

What I hear you saying is that if I send an operator to go to the panel to start that Appendix R diesel locally, because that's the only place I can control it, that would not be considered a recovery action. Is that correct?

MR. BARRETT: Yes. Since that one -- because it was part of your Appendix R.

MEMBER STETKAR: Okay. Suppose instead I send the operator to the diesel itself and locally push a button on the diesel to start that diesel, to crank it over and fire it up.

MR. BARRETT: That wasn't previously approved in accordance with the Appendix R process. We are talking about --

MEMBER STETKAR: So the second one would be a recovery action.

MR. BARRETT: Right.

MEMBER STETKAR: The first one would not.

MR. BARRETT: Right. We are talking about --

MEMBER STETKAR: Even though the diesel is

in the same physical location, in the same guide, does the same things --

MR. BARRETT: Right.

MEMBER STETKAR: -- to start the diesel.

MR. BARRETT: What we are talking about here is finding a way to utilize what has previously been approved for alternative shutdown, because the rule doesn't address alternative shutdown. Okay? Fires in the control room are not addressed in 805, so we had to kind of come up with some way of saying, "All right. This is what has been approved, and those things that have been approved" -- we had to find some way of parsing it out, so we could say, "These are approved and we will allow these. These other ones are not, and we've got to evaluate their risk."

MR. LAUR: Let me just -- I just had another thought here. What you have done in this meeting, and at the previous meetings, is come up with a very -- well, I guess -- in the case of diesel, that's out to lunch. And that wasn't the word I was going to use anyway.

CHAIRMAN APOSTOLAKIS: Be careful with the word you are going to use.

(Laughter.)

A very --

MR. LAUR: You've come up with some examples where our definition isn't 100 percent complete, and, therefore, there might be some additional burden on a licensee that has to calculate a delta risk, which they can take exception to.

But what I think you may be not thinking of is that the more wiggle room we give in this definition, the more ambiguity we give in this definition, the opposite is going to happen. We are going to have licensees come in saying, "Well, we have this thing, and it is the only place they can operate it."

It is 15 places, and the one guy can operate three of them, and the other guy can operate four. And those aren't recovery actions. And we would rather see them or an exception to this position than to allow -- what is probably more likely to happen is for people to come in with very strange plans for coping with fires in certain rooms that should have the risk evaluated, or should be at least evaluated.

MEMBER STETKAR: You know, I understand that, Steve, and I -- again, the reason I bring up the examples is to try to understand the extent to which that wiggle room has been built into the reg guide,

because I don't want to presuppose what people are going to come in with --

MR. LAUR: Right.

MEMBER STETKAR: -- you know, pragmatically or creatively or whatever.

My biggest concern, to step back because of the time, is raising these questions really addresses the issue of this whole concept of a fully acceptable, non-quantified recovery action, because by definition the human error probability for an action that is not a recovery action is zero in the context of the reg guide, is absolutely perfect, even though someone must call someone on the phone in the midst of a fire and tell him, "Go run, please, outside, across the -- you know, through the rain and snow, and go to the Appendix R diesel building, and push the button and get that diesel started within, you know, X minutes."

The human error probability for that, according to the reg guide, is precisely zero.

MR. LAUR: No, that's not correct.

MR. HARRISON: The delta is zero.

MR. LAUR: The delta risk -- actually, it's not the delta risk.

MEMBER STETKAR: Well, but in --

MR. LAUR: The additional risk doesn't have to be -- if it's not a recovery action --

MEMBER STETKAR: You don't have to quantify recovery actions. You don't not have -- I'm sorry. You do not have to quantify the delta risk for things that are not recovery actions.

MR. LAUR: Right. But there are other places in this rule that says if you -- when you build your fire PRA, the rule says it has to meet the as-built, as-operated-and-maintained plant. That means those numbers have to have human error probabilities in them that meet the standard, unless there is some bounding assumptions. So the risk -- it's in the total risk.

CHAIRMAN APOSTOLAKIS: I have a related question.

MEMBER STETKAR: If that's the interpretation, then I feel a little bit better. If somehow eventually that human error probability of those actions that are not classified as recovery actions for the transition --

CHAIRMAN APOSTOLAKIS: You never quantify those.

MEMBER STETKAR: Well, that's -- but Steve was saying that you do.

MR. BARRETT: Well, they are in the PRA, because you have to --

CHAIRMAN APOSTOLAKIS: If you have a PRA, which you don't have to.

Now, here is the related thing, which confused me. There is -- under 2.4, there is a definition of recovery actions, which we have discussed many times, and then it says, "Other operator actions that may be credited in plant procedures or the fire PRA to overcome a combination of fire-induced and random failures may also be recovery actions, but licensees do not need to evaluate the additional risk of their use."

MR. BARRETT: Right. That's --

MEMBER STETKAR: I think that's a bad use of terminology. I stumbled over that. I would like to hear the --

MR. BARRETT: Let me explain that, okay? In the rule -- in the standard, I should say, not the rule -- there is a very explicit treatment for a specific set of recovery actions. What it specifically says is the recovery actions that are needed to assure the availability of the success paths needed to meet the nuclear safety performance criteria are the ones you have to do this delta risk.

Now, there is other ones that you may do, because you have spurious actuations that complicate shutdown, that cause other problems, but they are not related to the success path, such as like the charging system to put water in.

CHAIRMAN APOSTOLAKIS: But it says "or the fire PRA to overcome a combination of fire-induced and random failures."

MR. BARRETT: Right, right.

CHAIRMAN APOSTOLAKIS: So if I have used them in the fire PRA, then they are not declared recovery actions. You don't have to calculate the delta risk.

MR. HARRISON: Unless it is related to the success path.

MR. BARRETT: Unless it is related to the success path.

CHAIRMAN APOSTOLAKIS: It doesn't say that. "Licensees do not need to evaluate the additional risk of their use." It's right there.

MR. BARRETT: In the context of this sentence, you mean.

MR. LAUR: Where is this?

CHAIRMAN APOSTOLAKIS: It's 2.4.

MR. LAUR: Right.

MEMBER SIEBER: Page 14.

CHAIRMAN APOSTOLAKIS: Page 14.

MR. LAUR: Right.

CHAIRMAN APOSTOLAKIS: The end of the second paragraph.

MEMBER SIEBER: Right.

MR. LAUR: Right. It says "other operator actions." It says, "The recovery actions identified in 4.2.3," which is the success path, whatever, have to -- other ones, meaning not the success path ones.

CHAIRMAN APOSTOLAKIS: No. But it says, "These other actions may also be recovery actions, but you don't have to evaluate them."

MR. LAUR: Right, right.

MR. BARRETT: There is a subset of --

CHAIRMAN APOSTOLAKIS: That's a subset of recovery actions.

MR. LAUR: Right.

MR. BARRETT: Right. It's broader than just -- for instance, let's talk about --

CHAIRMAN APOSTOLAKIS: I'm still confused, guys.

MR. BARRETT: It is. It is very confusing, but that's the way the rule is written. Okay?

For instance, if you end up having a fire in this room -- and this is a Train A room -- and that fire could start the Train A equipment, and that could complicate your shutdown, you would want to turn it off. Okay. Let's say you have high head safety injection come on, and you are going to end up taking the pressurizer solid, and you are going to fail a safety valve. It is going to complicate your whole activity. You would want to turn that off.

Well, you have already assured the other train is available, so that success path is already there. The fire-affected train isn't within the same population that you have to evaluate.

CHAIRMAN APOSTOLAKIS: Well, what confuses me is if I have done a fire PRA, where all of these things are --

MR. BARRETT: Yes, you're evaluating all of them.

CHAIRMAN APOSTOLAKIS: -- this is no longer a recovery action.

MR. HARRISON: Well, no, again, it is a recovery action, but it is not a recovery action that needs a delta.

CHAIRMAN APOSTOLAKIS: Which needs a delta. That's --

MR. LAUR: What the rule --

CHAIRMAN APOSTOLAKIS: Brings me back to my earlier comment. I mean, why pick on recovery actions?

MR. LAUR: What the rule -- well, I remember at the last meeting you said there was just as much uncertainty for barriers as there is for HRA, and I -- I don't know.

The rule seems to say -- and I personally agree with this -- that the -- that we do care about operator actions used in lieu of hardware for these credited trains. There is a fundamental philosophy, if you will, that the human errors -- there is all kinds of things that could happen that we don't know about, like errors of commission and other things that are uncertainty bounds, whereas a piece of hardware, even though it may be uncertain, at least has more well understood failure mechanisms or modes or something.

So the writers of this standard apparently felt the same way, that we want to know how much risk, how much additional risk we are having by not installing hardware for this credited success path. The fact that they didn't care about the rest of --

CHAIRMAN APOSTOLAKIS: Even though we have

approved those.

MR. LAUR: Sorry?

CHAIRMAN APOSTOLAKIS: See, that's the catch. Even though we have approved those recovery actions.

MR. HARRISON: In some cases, yes.

CHAIRMAN APOSTOLAKIS: There are other exemptions, but we don't think --

MR. WEERAKKODY: Let me -- I just want to make one -- a couple of statements on that.

CHAIRMAN APOSTOLAKIS: It's a policy issue, I think.

MR. WEERAKKODY: It is a little bit more than a policy issue, and Steve kind of hinted on that. One of the strengths of the -- at least in my personal opinion -- of 805 is that whether you read the rule, or whether you read the Statement of Consideration, and public comments, and -- that led to the rule, we always -- 805 always recognized that, like Steve said, if you are relying on a human action, instead of a passive, then you need to, at a minimum, be cognizant of what additional risk you are introducing.

And this goes back to the safety goals of Appendix R, so --

CHAIRMAN APOSTOLAKIS: I understand that. But is this sentence that I just read clear to everyone? That actions that are a part of the fire PRA are excluded. That -- why -- I mean, other operator actions that may be credited in plant procedures, or the fire PRA to overcome a combination of fire-induced and random failures, may also be recovery actions. But licensees do not need to evaluate the additional risk.

MR. HARRISON: If we were to continue that thought and talk about -- to bring the loop all the way back around to the success path, I think that is --

CHAIRMAN APOSTOLAKIS: Is that a sentence you may want to revise?

MR. WEERAKKODY: I don't want to just -- let me talk to three wise men sitting around that table and get back to you.

MR. HARRISON: I thought it was very clear.

CHAIRMAN APOSTOLAKIS: I read it. I read it.

MEMBER STETKAR: I hung up on that sentence, too, but --

MR. HARRISON: We can always write

something that looks back to the front of the paragraph.

CHAIRMAN APOSTOLAKIS: It sends a message that -- well, anyway, we exhausted it. Steve, how much more do you want to say?

MR. LAUR: Obviously, not much based on what you said. Let me just say we had a couple of public meetings --

CHAIRMAN APOSTOLAKIS: Good.

MR. LAUR: -- as we mentioned. I want to reiterate, we incorporated the majority of the stakeholder comments as they were made. Everybody said, "Yes, okay, that's a good idea." We really -- the hard spots that remain are necessary to foster clarity and regulatory stability. And that is to say, regulatory compliance.

We feel that this reg guide, in spite of some of the sentence structure, needs to be issued as soon as we can get it out. We have made, I would say, 90 percent, 95 percent of the necessary changes to meet these parts of the rule. Other changes -- the reg guide in the future will be tweaks to that. That doesn't mean there aren't, you know, major changes to 04-02 for guidance details, but as far as regulatory positions we think we are there.

And then, the final thing is that you are going to hear from the industry, we heard in the meetings a couple concerns. One is the guidance hasn't been fully vetted. For instance, these fire risk evaluations haven't been -- you know, gone through the entire pilot process to the end. Now, what we are seeing, though, in the submittals is that the pilots are able to do it.

The recovery actions -- we very clearly responded to the industry comment that they only needed additional risk for the success path actions that we are talking about. Okay. That's easy to say. That's what the rule says.

So the next level of detail is: well, how do you define "success path"? It looks simple, but when you get into associated circuits, it gets more complicated. So there is some guidance on that that we will have to develop later.

The license condition -- there was some argument over how we placed the words. It may be confusing. I think they mean the same, but it is an administrative change. We are going to consider what the industry suggested.

And then, the post-transition change evaluation process, we didn't focus on that. We

focused on the detailed risk evaluation. This is an industry comment during the meeting. We focused on the transition. But, actually, we do talk about the plant change evaluation process, and that is in detail in 04-02, which we endorsed.

But the FAQ process is still alive and well. We are still working through those nuances and implementation details. So we feel we've got it covered.

I think that's the end. Oh, this reiterates the slide that -- we do want you to send this to the full Committee.

CHAIRMAN APOSTOLAKIS: Go ahead.

MEMBER STETKAR: I've got one. I brought it up in the previous meeting, and the question is that Reg Guide 1.205 endorses NEI 00-01, Revision 1.

MR. LAUR: Yes.

MEMBER STETKAR: Reg Guide 1.189 endorses NEI 00-01, Revision 2.

MR. LAUR: And that has come out.

MEMBER STETKAR: Reg Guide 1.205 endorses NEI 04-02.

MR. LAUR: That's right.

MEMBER STETKAR: Revision whatever it is. The technical concern is that Revision 2 to NEI 00-01

contains substantially revised guidance regarding the evaluation of multiple induced hot shorts compared to Revision 1. And, indeed, the guidance in NEI 00-01, Revision 2, supersedes in that particular area a lot of the guidance in NEI 04-02.

So the question is now, in terms of regulatory guide space, we have a deterministic regulatory guide, 1.189, that endorses a more advanced concept of treating multiple hot shorts, multiple induced hot shorts, than our probabilistic guide.

I don't -- I don't understand that philosophy. Why --

MR. BARRETT: Let me explain. What we are endorsing in 1.205 is the circuit analysis portion of NEI 00-01, which is in Chapter 3, which is essentially the same. They have not changed anything related to the identification of components, the routing of cables, the assignment of fire areas. None of that has changed. What has changed has been the appendices to NEI 00-01, where you end up doing generic lists of multiple spurious in expert panels.

MEMBER STETKAR: But where in Reg Guide 1.205 is the qualification that you just said?

MR. BARRETT: I believe it says Chapter 3, that Chapter 3 --

MEMBER STETKAR: It just says, "The industry guidance document, NEI 00-01, guidance for post-fire, safe shutdown, circuit analysis, Revision 1 issued January 25th -- January 2005, Reference 12, when used in conjunction with NFPA 805 and this regulatory guide provides one acceptable approach to circuit analysis.

MR. BARRETT: Circuit analysis, right, which is Chapter 3 of NEI --

MEMBER STETKAR: It doesn't say Chapter 3. Circuit analysis includes evaluation of multiple induced hot shorts.

MR. LAUR: We were considering changing it to Revision 2 as an administrative change.

MEMBER STETKAR: Yes.

MR. LAUR: But based on what you are saying, we should probably keep it Rev 1, since that is clear and consistent with --

MEMBER STETKAR: No, I think -- I'm saying you should change it to Rev 2, because it is not just an administrative change. It is a fundamental --

MR. LAUR: No, no, no, no. You're right. It's a fundamental change. Therefore, we should keep it at Revision 1, because that is what -- that is the portion that we want to endorse, and that is what is

in NEI 04-02.

MEMBER STETKAR: Or clarify the fact that it is only Section 3 and not Section -- I think 4 is the --

MR. BARRETT: Four and five, yes.

MEMBER STETKAR: Four and five.

MR. LAUR: I think we could do that, in which case we could change it to two and put the clarification.

MR. BARRETT: Yes, we would have to provide clarification.

MEMBER STETKAR: You would have to provide clarification, because in regulatory guide space we now have two different regulatory guides that endorse different versions of guidance that have fundamental --

MR. LAUR: I personally don't see a problem with that. They are two totally different rules. But we can make it consistent, and it sounds like it's an easy fix just to put the Chapter 3. We had already talked about putting Rev 2 in there, and I had noted that it wasn't -- the qualifier wasn't there with the Chapter 3, which --

MEMBER STETKAR: It doesn't make any -- if it's only Chapter 3, it doesn't make any difference

which version of NEI 00-01 you endorse. It is the treatment of multiple induced hot shorts that is substantially different between the two.

MR. BARRETT: Yes. I think we will have to be very careful, then, that the PRA standard has one treatment of multiple spurious, and what is in NEI 00-01 is slightly different than that. We have to be careful with that. We will have to be very careful in how we end up specifying the bounds of what we are endorsing.

MEMBER STETKAR: Right, right, right. Okay.

CHAIRMAN APOSTOLAKIS: Okay. Any other questions or comments by the members?

(No response.)

Thank you very much, gentlemen.

And we will recess until about 10:30.

(Whereupon, the proceedings in the foregoing matter went off the record at 10:10 a.m. and went back on the record at 10:29 a.m.)

CHAIRMAN APOSTOLAKIS: We are back in session.

The next presentation is by Progress Energy, Mr. Jeffrey Ertman and David Miskiewicz. I got that wrong. Please go ahead.

MR. ERTMAN: Okay. Yes, this is -- I'm Jeff Ertman. I'm the Project Manager of the 805 transition project, and for the whole fleet, Progress Energy fleet. One of my other jobs is the corporate supervisor, and we're the fleet lead for the post-transition program. And we own the fire protection program at all of our plants now, so we are definitely interested in the transition and are interested in where it ends up, too. We are responsible for both of those.

David Miskiewicz is the lead or the principal engineer, but also the lead on the PRA, fire PRA development.

And just as far as topics -- well, first of all, we have a plant-wide fire PRA, and we are developing for all four of our sites. I just wanted to get that on the table.

(Laughter.)

CHAIRMAN APOSTOLAKIS: So you have a fire PRA that has been peer-reviewed, and you are happy with it.

MR. ERTMAN: We will get into that. I wouldn't say exactly happy with it, but it has been peer-reviewed. There is --

CHAIRMAN APOSTOLAKIS: Nobody is ever

happy in the PRA world, but --

MR. ERTMAN: Right.

CHAIRMAN APOSTOLAKIS: -- reasonably satisfied.

MR. MISKIEWICZ: We are going to talk about that.

MR. ERTMAN: We'll talk about that.

(Laughter.)

CHAIRMAN APOSTOLAKIS: Uh-oh. Okay.

MR. ERTMAN: And the topics primarily impact on the plant that we see the 805, just a little bit of background, mainly get into the PRA, PRA results, and then some of the impact of the Rev 1 of the reg guide that we are talking about.

I mean, fundamentally, at the plant level and implementation, we have three primary skill sets and technical areas. You know, in the past, the fire protection program focused on safe shutdown and classical fire protection. We now have a third leg of the analysis table, you might say, that has all of the fire PRA information for risk insights, which is a key -- I think one of the key improvements that we will have going forward.

Just as backing up a little bit more, we had some discussions I know in the earlier

presentations that the big change of philosophy of performance-based, we look at each individual fire source versus the whole room burning up at once,and driving us to maybe actions that are ultra-conservative or not right for the situation.

CHAIRMAN APOSTOLAKIS: Wouldn't you do an analysis like this also for the fire PRA?

MR. ERTMAN: We do. This data is used for both -- for all of the folks.

CHAIRMAN APOSTOLAKIS: Unless you are doing a bounding analysis here. In the fire PRA, you want to do more realistic.

MR. ERTMAN: We tend to look at consistently in all the fire areas the sources that are actually valid fire sources, and then what we do with that data depends on --

CHAIRMAN APOSTOLAKIS: Yes.

MR. ERTMAN: -- the results, and how far do we need to go for realism for that area.

CHAIRMAN APOSTOLAKIS: The thing that bothers me a little bit is your heading there -- performance-based follow the physics -- which implies if you do a fire PRA, do you follow voodoo, or what do you follow?

MR. ERTMAN: I understand. What this is

intended to indicate is that --

CHAIRMAN APOSTOLAKIS: That both -- both approaches follow the physics.

MR. MISKIEWICZ: Prior to this, though, the Appendix R, was assume the whole room was always i na high gas layer.

MR. ERTMAN: Yes, that's what --

MR. MISKIEWICZ: Now we are not doing that.

CHAIRMAN APOSTOLAKIS: Yes, that is a bounding analysis.

MR. ERTMAN: Yes, it is one that is -- we think that this is a better process than the one that we had before.

CHAIRMAN APOSTOLAKIS: Sure. But don't put down the PRA. PRA uses that, too.

MR. ERTMAN: Yes, absolutely. We use the same data that -- the physical plant is the same whether it is the classical folks or the PRA folks that are using the data.

CHAIRMAN APOSTOLAKIS: So which computer code are you using for this kind of calculation? Can you tell us?

MR. ERTMAN: We use some of the approved -- staff-approved codes. We use the FDT tools, which

are basically handbook correlations.

CHAIRMAN APOSTOLAKIS: Oh. This is for the EPRI.

MR. ERTMAN: You are talking about fire modeling tools.

CHAIRMAN APOSTOLAKIS: Yes, this particular picture.

MR. ERTMAN: Yes. Either the hand calculations, hand tools, like the FDT tools. The CFAST or FDS are the ones that we use.

CHAIRMAN APOSTOLAKIS: So you are actually using CFAST?

MR. ERTMAN: Yes. And FDS, too.

CHAIRMAN APOSTOLAKIS: Why? Why do you --

MR. ERTMAN: Sometimes -- occasionally you get to the point where you want that -- more information from an FDS, but --

MR. MISKIEWICZ: We use different modeling techniques for different scenarios, depending on the needs.

MR. ERTMAN: And we do get more into that later, quite a bit in the tools.

CHAIRMAN APOSTOLAKIS: Oh, you do?

MR. ERTMAN: Yes. And you will see that the -- first, you use the simple tools. And if they

are adequate, you don't go any further, you know, adequate for what you are looking for.

CHAIRMAN APOSTOLAKIS: So this is a classical approach, by the way. You have the flames, you model the flames, you have the plume, you have two layers, and then you have the ceiling jet.

MR. ERTMAN: Right, right.

CHAIRMAN APOSTOLAKIS: This is great.

MR. ERTMAN: Depends on the scenario. It may have a ceiling jet, it may not --

CHAIRMAN APOSTOLAKIS: Yes.

MR. ERTMAN: -- and so forth.

CHAIRMAN APOSTOLAKIS: Yes, absolutely. Very good.

MR. ERTMAN: And then, I just wanted to -- the type of data that we get, it is key on, what are your targets? And a big part of what Dave is going to talk about later is, what are the targets for the particular size fires that we model?

I just wanted to mention briefly the three areas of fire protection -- classical, fire prevention, building construction, and so forth. Many of the areas would benefit by the information we are pooling on the fire scenarios. But, essentially, this is the first protection classical part of the program.

Safe shutdown -- what used to be Appendix R is now NFPA 805, safe shutdown analysis.

Deterministic model of the plant, plant systems are modeled, equipment and cables are included, and it is, you know, somewhat similar but the deterministic model parallel to the fire PRA. So a lot of the same elements are in that deterministic model that we still maintain in parallel to the PRA.

We have mentioned earlier we are considering -- it looks like you have a question.

CHAIRMAN APOSTOLAKIS: What -- maybe you mentioned it, but you are going to tell us how well 1.205 has performed?

MR. ERTMAN: Yes. Yes, there was three areas. I was -- we were looking at one. Just a little bit of background of -- I think it's important to put it in context of, how are we going to use this in the plant when we're done?

CHAIRMAN APOSTOLAKIS: Sure.

MR. ERTMAN: And this first part is that, that I think we will get through fairly quickly. Dave is going to get into PRA results, how are we analyzing risk or recovery actions, a lot of the topics. And then I will have a summary of, what do we think Rev 1 does for us? Or where do we need to go from the Rev 1

of the reg guide?

CHAIRMAN APOSTOLAKIS: Yes. So lessons learned --

MR. ERTMAN: Yes.

CHAIRMAN APOSTOLAKIS: -- would be --

MR. ERTMAN: Yes.

CHAIRMAN APOSTOLAKIS: That would be great. Thank you very much.

MR. ERTMAN: And then, of course, the fire PRA, spatial analysis to the ASME Standard, Dave will get more into that.

I just wanted to cover the three main topics in fire protection now. One key -- and we touched on it earlier is -- the key going forward post-transition is the integration of all of these different areas into a common change process.

And I even see this as an additional defense-in-depth mechanism, that, you know, look at the risk information, you look at the results of the classical fire protection evaluations, and the safe shutdown, and you put together as you move forward and make changes in the future in the plant. And every change will have some level of use of this process going forward.

CHAIRMAN APOSTOLAKIS: Actually, did you

have previously-approved recovery actions?

MR. ERTMAN: We had limited, mainly leaving the control room was our primary one.

CHAIRMAN APOSTOLAKIS: You are going to tell us how you handled that.

MR. ERTMAN: We are going to talk about our recovery actions.

CHAIRMAN APOSTOLAKIS: Good, good.

MR. ERTMAN: I put this in here because it is our challenge box. But just wanted to get the philosophy that this standard or the risk-informed fire protection now brings into play the whole PRA infrastructure and the whole fire protection infrastructure, which was both pretty large at the plants -- peer review process versus Appendix B quality process. I mean, you have to think about how they all fit -- the periodic updates, and so forth. But there is, you know, moving forward a coordination between the two areas.

And just briefly, where we are with the pilot. Status -- we have issued Supplement 3 to our LAR about a month ago. We're getting a few other follow-up questions on that. Program implementation, middle of next year, with modifications done by -- you know, by the end of next year. So definitely it is --

what is happening with the reg guide is definitely important to us.

I will say that, in general, the RAIs though drove us to address issues in the reg guide anyway. I mean, that is really where we were going.

CHAIRMAN APOSTOLAKIS: It may sound like a ridiculous question, but how does a pilot work? I mean, the NRC staff is involved continuously in what you are doing?

MR. ERTMAN: Right. Us and --

CHAIRMAN APOSTOLAKIS: And they are sending you RAIs?

MR. ERTMAN: No. The RAIs were part of the LAR process.

CHAIRMAN APOSTOLAKIS: Oh. Of the what?

MR. ERTMAN: The LAR process, the -- actually sending in the license --

CHAIRMAN APOSTOLAKIS: Oh, the license amendment request.

MR. ERTMAN: Right. So the -- we have had a pilot process starting in 2005 with both the pilot plants. And there was a number, you know, probably close to 20 interactions by this point of sharing of information, looking at the progress as we go, and so forth.

CHAIRMAN APOSTOLAKIS: So if you have a question during the pilot as to what to do, do you get together with the staff and there is some discussion and then you say, "This is how we are going to do it"?

MR. ERTMAN: There was -- there were scheduled site meetings, or we would come to the -- to the NRC office. But then we developed the -- that's when we developed the FAQ process to help clarify if we had questions, and here is the direction. It gave us some stability in that answer, and not wait until the end like we are now.

CHAIRMAN APOSTOLAKIS: Okay.

MR. ERTMAN: And I will say that, for the most part, some of the areas that we have the most questions on are the ones that were closer to the end of the process, and so, really, less time to settle I think, like the recovery actions and things like that.

And we are still in the pilot process. In other words, until we get to that program implementation and get to using the change process, and see the inspection process, and get through those, we really are still piloting the 805.

And then we were looking at lessons learned amongst the fleet. I am not going to get into a lot of detail on that.

CHAIRMAN APOSTOLAKIS: You are using one plant?

MR. ERTMAN: One plant is the pilot.

CHAIRMAN APOSTOLAKIS: Which one?

MR. ERTMAN: Harris.

CHAIRMAN APOSTOLAKIS: Harris.

MR. ERTMAN: And then, Robinson, Crystal River, and Brunswick are other plants in the fleet. There is definitely -- we see improvements coming out of the transition. I just wanted to highlight a few of them.

We feel like it is an improvement to evaluate the plant on a scenario basis and use that information going forward, the reliance on operator manual actions significantly reduced through the process. And we will get more -- Dave will get more into how he handles the risk there.

Overall, our plant risk has been reduced, and we had improvements in defense-in-depth and fire protection due to the modifications. And I list a few for examples.

MEMBER STETKAR: Do you take credit for incipient detection now --

MR. ERTMAN: We do.

MEMBER STETKAR: -- install the new

detection systems?

MR. ERTMAN: We are installing the incipient --

MEMBER STETKAR: Okay.

MR. ERTMAN: Yes. I think now we are ready for Dave to --

CHAIRMAN APOSTOLAKIS: Oh, no. Let's go back.

MR. ERTMAN: Okay.

CHAIRMAN APOSTOLAKIS: What this Subcommittee is really interested in is how -- Slide 13, please.

MR. ERTMAN: Okay.

CHAIRMAN APOSTOLAKIS: Is how you actually did this. So, for example, why did you decide to upgrade the fire wrap barriers? What is it that led you to that?

MR. ERTMAN: What led us to it? The Hemyc and MT wrap. There were some industry questions on that, so we did perform some specific testing per the current approved -- you know, NRC-approved test protocols, and came up with, what do we think the duration is that this would last? And then, we had to make the decision -- or there were some -- some elements such as certain joints that we upgraded to

get to a certain common rating.

So we made the decision that this is the rating, and based on some of the risk insights that we -- is acceptable, and so we modified the plant -- or, actually, just finishing up that modification, to get it to that point of common performance level.

CHAIRMAN APOSTOLAKIS: Okay. Now, during the transition, did you have any previously-approved recovery actions that you had to evaluate?

MR. ERTMAN: We had operator manual actions. The only ones that were previously approved were leaving the control room.

CHAIRMAN APOSTOLAKIS: I'm sorry?

MR. ERTMAN: Leaving the control room.

CHAIRMAN APOSTOLAKIS: Leaving the control room. So what did you do about that?

MR. ERTMAN: Dave will get more into detail. He has some details on the recovery actions.

CHAIRMAN APOSTOLAKIS: Good.

MR. ERTMAN: I would like to --

CHAIRMAN APOSTOLAKIS: Good.

MR. ERTMAN: -- refer to that. But definitely the -- and overall the reliance is --

CHAIRMAN APOSTOLAKIS: How did you reduce your reliance on operator manual action? Or how did

you do?

MR. ERTMAN: One is with the mods, modifications. We are providing alternate seal injection, which provides diversity for that function. And then, that eliminates some of your deterministic separation requirements. If you have some of those separation -- you know, cable separation -- I won't say issues, but attributes, drove some of the manual actions. So if you eliminate the calls, you eliminate the manual action.

CHAIRMAN APOSTOLAKIS: Okay. That's good.

MR. ERTMAN: And in other areas we took a look at the actual -- the real fire scenario that you might have, and looked at all of the actions for that area. And some of them were what we call preemptive or very prescriptive to deenergize or to take certain actions in the plant. And we found that it is a better response to not have those actions in place for those areas anymore.

CHAIRMAN APOSTOLAKIS: In your first example --

MR. ERTMAN: So now -- go ahead.

CHAIRMAN APOSTOLAKIS: -- what is it that made you spend money to -- to make a design mod, when the operator manual action had been approved? What is

it that scared you away?

MR. ERTMAN: Two answers. First of all, in many of these areas they were what -- in the category that the NRC has said isn't -- hasn't been approved.

CHAIRMAN APOSTOLAKIS: Ah, okay.

MR. ERTMAN: So we needed to address them regardless, one way or the other.

CHAIRMAN APOSTOLAKIS: That changes the game.

MR. ERTMAN: Yes.

CHAIRMAN APOSTOLAKIS: Fine.

MR. ERTMAN: Okay.

MEMBER BLEY: Well, what is the other --

MR. ERTMAN: What's what?

MEMBER BLEY: You said you had two reasons. Tell us the other one.

MR. ERTMAN: Sorry. The other one is just, what's the right -- what do you want your operators to have in their procedures for that -- for fire in that area? What is the right response?

So it isn't -- you know, yes, we look at the regulation, but it is our plant, and we are going to make sure we have the right response for that situation. And 805 allows us the processes to do that

using the risk evaluation and post-transition and the change evaluation.

CHAIRMAN APOSTOLAKIS: Very good.

MR. MISKIEWICZ: So we do have some risk insights that we get with the PRA that can help us, you know, look at these actions and say, is that something we want to pursue? Or do we want to do something different?

MR. ERTMAN: I mean, definitely preemptive actions, some of these you know wouldn't be what you would want, but that's what we were driven to in the past under the past regulation.

CHAIRMAN APOSTOLAKIS: Okay.

MR. ERTMAN: Okay?

CHAIRMAN APOSTOLAKIS: Mr. Miskiewicz?

MR. MISKIEWICZ: Okay. I am going to transition a little bit more, focus on the PRA aspects on how we got here. Your first question was, "Do we have full fire PRA?" And we do. We also, as a part of this effort, updated our internal events PRA to meet the reg guide.

CHAIRMAN APOSTOLAKIS: Now, the fire PRA, before you start, we hear through the grapevine that the industry is suffering doing fire PRAs, the methods are evolving all the time, they are changing, a

tremendous expenditure of resources, and we are trying to understand this.

We are not saying it's not true. We are trying to understand why -- why a fire PRA has those unfortunate consequences. Can you enlighten us a little bit on this?

MR. MISKIEWICZ: I hope that is what I am going to do in the next few slides.

CHAIRMAN APOSTOLAKIS: Good.

MR. MISKIEWICZ: That is what I am trying to --

CHAIRMAN APOSTOLAKIS: Oh, okay. Very good.

MR. MISKIEWICZ: So if I don't hit what you want, I'm sure --

CHAIRMAN APOSTOLAKIS: If you don't, we will --

MR. MISKIEWICZ: -- ask me again.

We did build the fire PRAs. We had them reviewed. They were reviewed by the NRC in a staff audit, which was very much like a peer review. And then, there were some findings. We did some more work, and we had a supplemental industry peer review also performed on that, and we have addressed those.

During the process, we -- the pilot

process, what did we do? There was a lot of communication with NRC, with the other pilots, with NEI, with the rest of industry, to try to keep everybody up to date on here is where we are standing, here is the issues we are having, and some of those came out.

Getting into some of the issues -- very early, you know, 6850 was the template, so we started off, that's the solution. There were some departures right from the beginning. We found most of the fire information is all done by fire area, fire zone, makes a lot of sense. We had a new thing called compartments, and we are using compartments, because it meets the 6850 standard. But it turns to be more of a tracking mechanism for us, to keep track of things, than to really solve new issues.

Scoping modeling -- it was a way to -- from 6850 to look in rooms and be able to disposition, they are not important right away. We went -- ended up having to go right to fire modeling techniques. Nothing screened using scoping for us.

So there is a whole section of 6850 that really wasn't that useful when we got through it, and the whole concept of screening, that there will be some low-risk areas that you don't have to do any

detailed work on, we didn't have any of those.

So everything turned into you need more fire modeling, more work, so --

CHAIRMAN APOSTOLAKIS: Again, you didn't have any of those because of your plant, or because 6850 proposed a method that was not really realistic or --

MR. MISKIEWICZ: I think there was an expectation that when the developers of 6850 looked at it that fire was not going to be as severe as they were.

CHAIRMAN APOSTOLAKIS: That is very strange.

MR. MISKIEWICZ: And when we started putting it into the models, there were targets all over the place, and --

CHAIRMAN APOSTOLAKIS: Let me put my question a different way. Using your experience, would you advise the authors of 6850 to go back and revisit what they say in the scoping and screening areas?

MR. MISKIEWICZ: I don't know if I would advise that you can't do it. Maybe I would go back to the standard aspect and say, "Don't put so much effort in your standard that you have to do those pieces,"

because there is little benefit for most people I think.

CHAIRMAN APOSTOLAKIS: Is anybody forcing you to do a screening analysis?

MR. MISKIEWICZ: No.

CHAIRMAN APOSTOLAKIS: Oh.

MR. MISKIEWICZ: Not forced, but it's in the standard. You will get rated on, did you meet/not meet certain things? And those pieces are in 6850. As you just go through the process, for a lot of people that piece of the process is not very fruitful.

So we skipped those right away, which was confusing when we went to peer pilot meetings, and the like, is that we are not going Task 8 in 6850 the way it is written. We are jumping right to some kind of fire modeling method, and that was --

CHAIRMAN APOSTOLAKIS: Okay.

MR. MISKIEWICZ: -- confusing.

CHAIRMAN APOSTOLAKIS: Thank you.

MEMBER STETKAR: Those two tasks in particular are very, very, very plant-specific. If you have a plant that is semi-compartmentalized -- let me call it that -- then you might be able to take more benefit from the scoping and screening evaluation. So illuminating them completely from the guidance would

penalize folks who are perhaps configured differently than your particular --

MR. MISKIEWICZ: Right.

CHAIRMAN APOSTOLAKIS: See, that is what I am trying to understand. Is it because of your particular plant that these sections there were not very useful, or there was some defect in the way they propose that you do it?

MR. MISKIEWICZ: I am not calling it a defect. I am saying we noticed early we could -- that didn't matter for us, and it hasn't mattered for the next --

MEMBER STETKAR: But on the other hand, placing a burden on you to justify why you did not do that for this particular element seems --

MR. MISKIEWICZ: And that has lessened over time. But early in the process it was -- created some confusion. I think now that is one of the lessons learned that everybody has gathered since -- don't spend a lot of effort there.

CHAIRMAN APOSTOLAKIS: The reason why I am asking these questions, of course, is to make sure that the NUREG report will be updated and corrected. It is not -- we are not looking to blame anybody.

MR. MISKIEWICZ: Yes. I am going to talk

a little bit about some of the fire modeling --

CHAIRMAN APOSTOLAKIS: But that will help us, if you give us your insights, so let's move on.

MR. MISKIEWICZ: One of the reasons that scoping doesn't help is because we postulate such large fires to start with. If we had more realistic fires, it might actually help.

The next slide -- it is just some details. We talk about the amount of work we did. We had over 50 model logic changes that we incorporated in the model, mostly safe shutdown component modeling and multiple spurious issues. We had over 400 PRA components that were added to the safe shutdown list, if you will, that had all of their circuits routed.

CHAIRMAN APOSTOLAKIS: I don't understand. Which model are you modifying?

MR. MISKIEWICZ: We are modifying the PRA, but the components in the PRA that were not analyzed as a part of Appendix R. We want some information on the non-safety feedwater pump --

CHAIRMAN APOSTOLAKIS: Right.

MR. MISKIEWICZ: -- which was not part of Appendix R, but we want to credit the PRA, so we had to get those circuits routed.

CHAIRMAN APOSTOLAKIS: But did you have an

internal event PRA when you started?

MR. MISKIEWICZ: Excuse me?

CHAIRMAN APOSTOLAKIS: Before you started the fire PRA, did you have a baseline PRA for internal --

MR. MISKIEWICZ: Yes, yes.

CHAIRMAN APOSTOLAKIS: -- events?

MR. MISKIEWICZ: Four hundred of the components that were in our baseline PRA we added to the --

CHAIRMAN APOSTOLAKIS: Okay. So there was already a baseline PRA. Okay.

MR. MISKIEWICZ: But they weren't in the circuit analysis section that safe shutdown uses. So we increased their scope of work.

MR. ERTMAN: In other words, we put it into the database to ensure that for each scenario we knew what the targets were. We did the spatial, you know, work to track the cables out to the plant, so that you knew what was impacted by each fire.

CHAIRMAN APOSTOLAKIS: Okay.

MR. ERTMAN: So there was some work in that direction to make that -- get that data.

MR. MISKIEWICZ: These are 400 components not considered part of compliance in the old rule.

And I don't know how many were before that. I am going to guess 1,500 or something.

CHAIRMAN APOSTOLAKIS: Did you comply with Appendix R?

MR. ERTMAN: I'm sorry?

CHAIRMAN APOSTOLAKIS: Did you comply with Appendix R?

MR. ERTMAN: Well, we did to the point where we had some issues with manual action. And then the multiple spurious operations issues we needed to address. So other than working through those issues, we felt we complied.

CHAIRMAN APOSTOLAKIS: So why did you choose them to go to NFPA 805?

MR. ERTMAN: Well, partly, it was to address those issues adequately.

MR. MISKIEWICZ: Hemyc.

MR. ERTMAN: And then, there was the Hemyc fire wrap, which is a fire barrier that was --

CHAIRMAN APOSTOLAKIS: Okay.

MR. ERTMAN: -- in question on the rating.

MR. MISKIEWICZ: It was supposed to be good for an hour, and it was only good for 25 minutes. And Harris has a lot of it.

We did the walkdowns. We have over 1,900

ignition sources identified at Harris right now, and over 21,000 targets in our database. Jeff showed you a little bit of the database, but for every ignition source we walkdown, we know the targets and the distance of the targets up to the 98th percentile fire. And so the targets would be a raceway. We would then have the -- we correlate to the cables, the cables go to the components and the failure modes. So we have a very extensive database, so we can analyze that.

We did a detailed circuit analysis on over 2,000 cables. And when I say "detailed" it is -- not only do we know where it goes and what it impacts, but we wanted to find out, was it a intercable hot short issue, intracable, what is the probabilities we can assign? There was a lot of work that we did on that.

MEMBER STETKAR: Dave, are you going to talk a little bit more about that in subsequent slides, or is --

MR. MISKIEWICZ: Not too much.

MEMBER STETKAR: Okay. Let me ask you, then, is it -- the fourth and the fifth bullets on this slide talk about detailed circuit analysis and fire modeling. Detailed circuit analysis, to the extent that you just mentioned in terms of intracable

versus intercable, and multiple short circuits, is a very, very labor-intensive process, as you probably are well familiar with.

When all is said and done, did you find that that level of effort for the detailed circuit analysis was cost effective? Or did you not really need to do that amount of circuit analysis?

MR. MISKIEWICZ: Roughly, I will say we had about an order of magnitude improvement in our CDF when we did it.

MEMBER STETKAR: But in terms of -- would you get the same order of magnitude by evaluating 200 cables rather than 2,000 cables if you had judiciously, you know, selected those 200 cables?

MR. MISKIEWICZ: I can't say which of the cables actually did it, but we didn't -- we selectively asked them to do certain cables based upon the sources that had high consequences.

MEMBER STETKAR: What I'm trying to get at is something you mentioned earlier in terms of what we have been hearing -- the burden placed on the industry for doing these analyses. Very, very early on in the risk assessment process for internal events -- now I'm talking 25 years ago -- people felt that, for example, they needed to model reactor protection systems down

to wire connections and short circuits on resistors and spent huge amounts of effort doing that, and finally concluded that we don't need to do that.

So our -- I'm trying to get a sense of, are we at that --

MR. MISKIEWICZ: We didn't go to that level, but say I had a spurious valve opening, and there are six cables that were causing that. Do all of those six really cause it? I didn't know. We had to ask them to come back and give us that information.

MEMBER STETKAR: So you asked them to first do that.

MR. MISKIEWICZ: We were able to tell them, "Here is all the cables."

MEMBER STETKAR: Okay.

MR. MISKIEWICZ: We knew which causes were causing it.

MEMBER STETKAR: Okay.

MR. MISKIEWICZ: We just didn't know was it -- do I go 1.0 on the spurious? Can I make it a .06, or is it a zero? Some of them --

CHAIRMAN APOSTOLAKIS: Then, is the -- numbers like 21,000 are scary. Did you do that because you are a pilot and you wanted to do a thorough job? Would the next guy have to look at --

MEMBER BLEY: Did you learn something that would let people --

CHAIRMAN APOSTOLAKIS: Yes. Or maybe the screening that --

MR. MISKIEWICZ: You can't screen. You basically have to drive it from the circuit to the vent in your fault trees that are going to be damaged. And you can very easily get here.

MEMBER STETKAR: So that --

CHAIRMAN APOSTOLAKIS: Go ahead.

MEMBER STETKAR: Those targets, the body counts, 21,000, if you identify a single conductor in a multi-conductor cable as a target, you get large numbers. If you identify the cable, you get smaller numbers. If you identify the raceway as a target --

CHAIRMAN APOSTOLAKIS: Right.

MEMBER STETKAR: -- you get even smaller numbers. So in some sense those large numbers are -- can be bookkeeping.

MR. ERTMAN: So essentially you are saying on average about 10 target per source by that number, which --

CHAIRMAN APOSTOLAKIS: Is this an inherent requirement of the methodology? In which case we will say, "Well, you know, doing a fire PRA requires a lot

of resources, but that's the way it is." Or is there something that in the future maybe we can do in a more efficient way? That's the question.

MR. MISKIEWICZ: I don't see more of an efficient way. The only way I think you get out of doing that is if you are -- if you can demonstrate your risks are low to start with and you -- without having to go into that kind of detail.

And some of that lies in some of the other difficulties with the fire modeling. You know, if our fire modeling said these fires never leave the cabinet, then I don't use the cable phrase, then I don't need to trace every circuit. But if my fire modeling says I am in the cable trace-back, and I am in the cable spreading room where I am impacting tens of trays, that is -- you are going to very quickly build up your targets.

CHAIRMAN APOSTOLAKIS: Going back to the comment from Mr. Stetkar, 21,000 refers to the individual conductors or --

MEMBER STETKAR: That's what I was going to ask. I was making the presumption -- or are those targets conductors, cables, raceways?

MR. MISKIEWICZ: Ultimately, they would be individual circuits. You know, in other words, I

applied them to -- of those 1,900 sources, there are 21,000 --

MEMBER SIEBER: Conductors.

MEMBER STETKAR: Conductors or cables?

MR. MISKIEWICZ: Some of them could be repeated. There is some repetition. The same cables may be hit by three sources, and it is going to count as three.

MEMBER STETKAR: But it is a cable at least, it is not conducting --

CHAIRMAN APOSTOLAKIS: They're the conductors inside the cables.

MR. MISKIEWICZ: It is going to be the relationship from -- to the end -- to the end event. In other words, I've got this many valves. So what basic event is getting impacted?

MEMBER STETKAR: I was just -- I mean, that is --

MEMBER BLEY: Following George's question, and maybe somebody from the industry can comment on this, does anybody -- or did you see the facility that somebody might be developing some software aids to help you pull this together? You know, not you, you have already done it.

MR. MISKIEWICZ: Well, there are a number

of databases. Once you have your data together, there is a lot of I would say flexibility in how you are going to maintain that database. But to actually get the initial set requires somebody that can trace those circuits.

MEMBER BLEY: Fair enough.

MEMBER SIEBER: You actually have -- David, all of that, when the plant was built. So you knew which cable --

MR. MISKIEWICZ: Loosely, yes. The hard copy. It was a -- we did have -- we had the cable routings versus raceway data. But it wasn't in a database.

MEMBER SIEBER: Some plants don't even have that.

MR. MISKIEWICZ: Right. We had to put that in a database, but we did have that. And that becomes very important with the 400 extra components we added. They had to go back to the original records to figure out where those cables for those --

MEMBER SIEBER: Right.

CHAIRMAN APOSTOLAKIS: So the message we get here from this slide is that such detailed analysis is necessary. Is that correct?

MR. MISKIEWICZ: I believe so, yes.

CHAIRMAN APOSTOLAKIS: Okay.

MEMBER RAY: Do you have any thought about how it -- would it be the case -- I mean, I guess I'm not as amazed as you seem to be.

CHAIRMAN APOSTOLAKIS: The thing that bothers me is this -- is this rumor that fire risk assessment is eating up all of the resources, and people can't do anything else. And I am trying to understand it. If this is true, what is on this slide, then I am beginning to understand it.

But then, you know, I also have -- I mean, the questions that John and Dennis asked were, can you screen these? Can the next guy do something less than this and still get to the results? And the answer seems to be no.

MR. MISKIEWICZ: There are vary degree -- you know, degrees of how you can attack a high-risk problem. And fire modeling -- there's fire modeling, there's circuit analysis, there is --

MEMBER STETKAR: Let's get to the fire modeling, because that is the other part of this equation.

CHAIRMAN APOSTOLAKIS: Sure. Let's go on.

MEMBER STETKAR: I would like to know what's on the circuit analysis, because I looked ahead

and I think you are going to talk about fire modeling.

CHAIRMAN APOSTOLAKIS: Go on, because we have 27 minutes.

MR. MISKIEWICZ: Okay. We have over 70 of the sources where we did some fire modeling -- additional fire modeling insights beyond the simplified fire models, and I'm going to talk about that. So in our final product, we had -- we have over 2,400 scenarios in our final model right now, which means I have more than one per --

CHAIRMAN APOSTOLAKIS: Okay.

MR. MISKIEWICZ: -- for many of the sources.

Real quickly, these are the numbers we have right now. Our total is about 3^{-5}, and our LERF is about an order of magnitude lower than that. The top -- you know, there are several compartments that had the top 98 percent of our risk.

MEMBER SHACK: And your internal CDF, internal event CDF?

MR. MISKIEWICZ: Our internal event CDF is around $1E^{-5}$.

CHAIRMAN APOSTOLAKIS: How much?

MR. MISKIEWICZ: About $1E^{-5}$. I think it's slightly lower.

CHAIRMAN APOSTOLAKIS: So this is bigger.

MR. MISKIEWICZ: This is larger, yes.

CHAIRMAN APOSTOLAKIS: Ooh.

MEMBER STETKAR: Dave, to keep things moving, I don't want to dwell too much on specific results, because I think we are more interested in lessons learned from the process. But if you could -- if you could just quickly characterize those seven areas that contribute -- or at least the top three anyway that contribute a good fraction of that. What particular areas of the plant are they?

MR. MISKIEWICZ: It is -- of the top -- you know, it is normal things you would expect to see, you know, your congested areas, your cable spread rooms, your switch gear rooms, your control rooms.

MEMBER STETKAR: So there is no surprises that you found.

MR. MISKIEWICZ: There were a couple of surprises I am going to get into later that we --

MEMBER STETKAR: Okay. Fine.

MR. MISKIEWICZ: -- that we found. But, you know, the way we would go is we look -- you know, this is a high-risk area, so, you know, I can also go down and look at percent of fire by scenario, by source, by cable. I can get it right down to --

MEMBER STETKAR: At this level, I was just curious whether there are any surprises.

CHAIRMAN APOSTOLAKIS: I thought you didn't like the word "compartment."

MR. MISKIEWICZ: I don't. But in order to meet the standard, I have to have compartments.

(Laughter.)

They may look a lot like fire areas.

(Laughter.)

MEMBER STETKAR: Well, the standard doesn't say you can't use fire areas.

MR. MISKIEWICZ: Right. It doesn't define "compartment." So it's the ease of not having to explain all of the --

CHAIRMAN APOSTOLAKIS: Oh, okay. This is not the meat of it -- transition.

MR. MISKIEWICZ: Well, we're getting down to it, yes. So then we also do the delta CDFs to meet the 805 transition. So the other stuff is basic PRA. Now we get to the delta CDFs.

For Harris we had two categories that we did those. One was the fire wrap. Our Hemyc was deficient. It was only good for 25 minutes in the tested configuration, and --

MR. ERTMAN: It doesn't meet the

deterministic --

MR. MISKIEWICZ: The deterministic requirement was one hour. So we had to do a delta CDF on what is the difference between a 25-minute Hemyc barrier and a one-hour Hemyc barrier.

CHAIRMAN APOSTOLAKIS: Before you go into detail, what is the meaning of the negative values?

MR. MISKIEWICZ: I'm going to that in the next -- the bottom piece.

CHAIRMAN APOSTOLAKIS: Oh, okay.

MR. MISKIEWICZ: But very good, I didn't point that out. Our post-transition results we are actually claiming there by looking at our analysis that we are having a risk improvement on what -- the things we have done, mainly due to the mods.

And then, the second type of deficiency we evaluated were cables that were separation issues. We had a cable that -- you know, that went through -- a B cable that went through the Alpha train.

CHAIRMAN APOSTOLAKIS: But that comes to -- during the transition, the delta risk is between what you have and what you would have if you complied with NFPA 805.

MR. MISKIEWICZ: Yes.

CHAIRMAN APOSTOLAKIS: So what you have is

better than NFPA 805. Is that what this means?

MR. MISKIEWICZ: That's what it means. I'm going to -- just let me walk through it, and I'm going to explain it. That's why I put this slide here.

CHAIRMAN APOSTOLAKIS: Oh, sure. Sure, go ahead.

MR. MISKIEWICZ: So we have the two different types of deficiencies -- to evaluate the delta CDF for wrap, I basically would change it to -- they have an hour to suppress the fire before that cable is damaged versus we have 25 minutes to suppress the fire before the cable is damaged. And so it becomes a function of manual suppression response.

And that was not the big contributor. You know, 25 minutes is a lot of time when it comes to getting people in the room with fire suppression, and it is -- it is not a safe suppression to put out a fire, it is to keep it from spreading. So once they get in with suppression, the fire growth is stopped. So we would stop the damage at that point.

For the cables, it would be, what if the cable was, as we talked about before, the cable did not get routed through that room. So we remove that cable from the target set, rerun it, and get the risk

without that -- those cables in the room. And then I have my baseline with them in the room, and I can get the delta, and that was the big driver. So that was the delta CDF strictly from the variances.

One of the things we decided to do was to add some modifications. The one modification we added was the alternate seal injection. If you look at the bottom graph there, or chart, so I have my Type 1 be VFDRs, which are the cable -- separation cable issues, which would be the second column on the top sheet.

CHAIRMAN APOSTOLAKIS: Remind me what VFDR stands for.

MR. MISKIEWICZ: Variance from deterministic requirements.

CHAIRMAN APOSTOLAKIS: Right. Right.

MR. MISKIEWICZ: The Type 2/3 were the wrap issues that -- the Hemyc, and we also had some MT that didn't meet the requirement. And then, I totaled those up, so that third line matches the top chart.

For internal events, the seal injection mods that we put in had a big benefit for internal event CDF. So it had nothing to do with meeting requirements, but the fact that it provides alternate seal injection for the plant for loss of offsite power events had a big benefit on our plant. So we

installed this modification. It had offsetting benefits beyond the fire.

The way the regulation is -- the reg guide is set up we can credit risk modifications that give us risk benefits to offset other risks that we have. So we are looking at the additional benefits we got by doing this modification. Even though we predominantly put in for the fire, it had a lot of extra benefit. And that's where --

CHAIRMAN APOSTOLAKIS: What was the intent of the regulatory guide or the regulations? I thought it was to --

MEMBER RAY: What intent?

CHAIRMAN APOSTOLAKIS: I thought the delta risk had to do with fires and they are benefitting somewhere else.

MEMBER RAY: You are saying, it wasn't the intent but it -- it wasn't clear to me what you meant by what --

CHAIRMAN APOSTOLAKIS: Now, doesn't the rule say that each one of these individually has to be acceptable, and then the total has to be acceptable? So the total is okay, but each one of these is also -- well, you know, it is --

MR. MISKIEWICZ: Right. Each one of them

is also --

CHAIRMAN APOSTOLAKIS: Yes, each one is small. Okay. Well --

MR. MISKIEWICZ: Well, when you talk about total CDF and all that, we -- so, you know, the total deltas for transition, you have to put them all together, and we do that.

CHAIRMAN APOSTOLAKIS: All right. Very interesting.

MR. MISKIEWICZ: Okay. Now, some of the more energetic topics, at least from the questions you asked before.

The electrical -- a lot of our results are due to electrical cabinet fires, and we've talked a lot about the conservatisms in it. So right now we do a simplified model of how that cabinet fire is. Those are the main tools we have, and issues with, how do we treat vented, non-vented, sealed electrical cabinets? And those definitions become sources of uncertainty, since we -- the guidance leads us to always use conservative assumptions on those items.

MEMBER STETKAR: Dave, a point of clarification that may help some other members. When you talk about electrical cabinets in this context, that includes instrumentation and control cabinets and

electrical switch gears, is that correct?

MR. MISKIEWICZ: That's correct. Yes.

MEMBER STETKAR: When you say electrical cabinet fires were very important to the results, were those the switch gear type motor control centers, or were they the instrumentation and control protection cabinets?

MR. MISKIEWICZ: Yes.

MEMBER STETKAR: Okay.

MR. MISKIEWICZ: A lot --

MEMBER STETKAR: That's important, because the way that people have grouped together those cabinets into one kind of amorphous blob, I was curious whether you were seeing substantially different risk contributions depending on the type of cabinet.

MR. MISKIEWICZ: We saw the solution for how you are going to address those issues would be different between the two types of cabinets. We tended -- the incipient detection we used in some of the low voltage cabinets we didn't try to use that in switch gear type cabinets.

And there are some issues going on that are dealing with that, and I've got a little demo slide next that I'm going to kind of look at how the

issues that -- as I saw with the cabinets.

Also, at Harris, all our cable damage and secondary ignition is based upon a lower bound threshold. So we have some of this cable that is called Kerite cable that has a lower damage threshold than a typical thermostat. For every cable we didn't -- we don't have in our database that fails here, it fails there.

So we used the lower threshold for everything, so our zone of influence tends to be larger for large target sets. If testing shows that cable doesn't fail as low, that could change some of our results.

MEMBER STETKAR: Do you think that is a big deal to contribution, significant --

MR. MISKIEWICZ: Yes.

MEMBER STETKAR: It is?

MR. MISKIEWICZ: Between 400 and 600. It changes -- it's influenced by feed.

MEMBER STETKAR: Okay.

MR. MISKIEWICZ: Also by power. Circuit analysis was one of the other issues that we have, and this is one of the surprises is that we are seeing circuit failures in turbine buildings. There are areas that haven't been analyzed a lot that are

killing offsite power a lot, and we don't believe that the damage is as extensive.

So there is some additional circuit analysis that we haven't had done that we are talking about.

MEMBER STETKAR: Because of the assumed size of the fire in the turbine building?

MR. MISKIEWICZ: Well, fire hits certain circuits and certain trays that were always -- there is an assumption in Appendix R that you always had loss of offsite power. So not a lot of work was done to analyze all of those circuits in the switchyard. So you may have had a fire in the switchyard and it is saying through associated circuits that you fail your breakers that are your fast-transfer breakers, or you are failing some, you know, circuits that are providing indications for diesel sequencing and things.

So you get a lot of extra failures that we would like to do some more work on. We have had transformer fires that don't result in total loss of offsite power. So --

MEMBER STETKAR: Let me see if I can understand what you just said, though. That -- is your experience that you discovered a larger number of

circuits in the turbine building that actually would cause a loss of offsite power in the real world now, or is it that the analysis methods that you have used or have been required to use previously require that you assumed loss of offsite power, and, therefore, had to justify a departure from that?

MR. MISKIEWICZ: I guess it is a demonstration of the resources that we need. When we model a target set, it includes this tray, and we follow those circuits in the tray to the end devices that we fail. It is failing all for offsite power, so we need more detailed analysis on these circuits to say that is really not the case.

So there is even more analysis we need, we believe, that we are going to have some improvements in our risk, because we are taking hits --

MEMBER STETKAR: Oh, because you still have conservatism out of hits. Okay.

MR. MISKIEWICZ: -- and there is more we want to do. So our results are still conservative, you know, and it goes back to -- even though we have done all of this work, we -- there is always more work to do. So, you know, is it -- are we happy?

MEMBER STETKAR: Well, you don't know how low the risk is, but you have a good sense of how big

it is not.

MR. MISKIEWICZ: We still believe we are conservative, and we think that, you know, there are other things that are going to make that change. We also -- our current -- what was submitted in the LAR does not credit the incipient detection in the control room. We decided to add the incipient to a couple of panels in the control room, which was a separate analysis and we didn't update that.

So there were some fires in the control room that had some high consequence that we put that in for. It is not necessarily a deficiency, because alternate shutdown comes into play for those fires. But we still elected to put the incipient detection in those panels, because there were consequences that this --

MEMBER STETKAR: You couldn't take credit for prompt detection from the operators in the control room for those fires?

MR. MISKIEWICZ: You can. I mean, but even with prompt detection, I talked about the electrical cabinet propagation. You go from zero to peak in 12 minutes. There is not good tools right now to say, from the time I sniffed some smoke, how long does it take to grow. We don't have those tools.

MEMBER STETKAR: Okay.

MR. MISKIEWICZ: And that is part of the struggles that we are going through as an industry is that there is a lot of information that we are still using bounding input for.

We also didn't credit self-recovery of hot shorts. So if we have a cable that is hot-shorting, the PORV is spuriously opening, causes a LOCA --

MEMBER STETKAR: Twenty minutes --

MR. MISKIEWICZ: -- but there is some testing going on. There is some data that shows it may be 10 minutes, 20 minutes, that it will self -- go to ground and the valve would close on its own. We haven't credited any of that, so there are additional things that --

MEMBER STETKAR: That is only -- right now it is only for AC circuits.

MR. MISKIEWICZ: There is stuff for AC out there. DC circuits is going on as we speak I think. They are also doing testing of cable failures. So this Kerite load damage threshold, we may get some additional information on that.

CHAIRMAN APOSTOLAKIS: ZOI is zone of influence?

MR. MISKIEWICZ: Yes. ZOI is the zone of

influence, yes. So this picture here, you know, Jeff showed you. He followed the physics slide, and I talked about the scoping. This is kind of -- and I'm not going to say it's reality. This is what we're doing for the most part.

CHAIRMAN APOSTOLAKIS: Well, let me -- you are assuming there is a fire in the cabinet.

MR. MISKIEWICZ: This is what 6850 tells us to do, and there is very little guidance that goes beyond this. We have a distribution of fires for an electrical cabinet.

CHAIRMAN APOSTOLAKIS: Right.

MR. MISKIEWICZ: And it is either a peak release of 211 or a peak release of 702, with a distribution. And so we can postulate a zone of influence given those different size fires.

CHAIRMAN APOSTOLAKIS: But this -- so if I have a more severe fire inside a cabinet, like the 98 percentile, then that means all three -- are these cable trains?

MR. MISKIEWICZ: Right. All three trains, and width would be --

CHAIRMAN APOSTOLAKIS: But even if I have only the 75 percent or the 50 percent, the lower cables can ignite.

MR. MISKIEWICZ: Yes.

CHAIRMAN APOSTOLAKIS: So -- and propagate.

MR. MISKIEWICZ: So any fire --

CHAIRMAN APOSTOLAKIS: So this is just the beginning.

MR. MISKIEWICZ: Right. Any fire bigger than 50 percent is going to involve the whole cable -- whole cable stack basically.

CHAIRMAN APOSTOLAKIS: Okay. And what code do you use for that?

MR. MISKIEWICZ: This is the FDT method, basically. It is hand calcs to give us the zone of influence.

MEMBER STETKAR: Well, but it -- these rates that are just specified in the --

MR. MISKIEWICZ: Right. The methodology, we treat all fires as an open fire located one below the top of the cabinet. So even though there is a fire inside the cabinet with cable trays, the methodology basically treats it as a fire in open space.

CHAIRMAN APOSTOLAKIS: But in order to calculate the ignition of the lower trays or the propagation, these tables are good enough for that?

Or do you go to a computer code?

MR. MISKIEWICZ: They are good enough with the exception of that, what I just said, we are treating that point that I have there as just being a bonfire.

CHAIRMAN APOSTOLAKIS: Right.

MR. MISKIEWICZ: Not a fire inside of a cabinet with doors. If it is not a "sealed cabinet," we treat it as a fully open cabinet.

MEMBER BLEY: I don't remember the details in the methodology. Was the intent, though, that that open fire be selected somehow as equivalent to the heat source you would get from a cabinet fire?

MR. MISKIEWICZ: The heat release rate comes from the tests that were done at Sandia and various places, which were not necessarily this -- where we will get into things. Accelerant was used, you know, artificial heat was introduced to keep it burning. So there are maximums, but not necessarily representative of what we are really going to get.

MEMBER BLEY: Okay.

MR. MISKIEWICZ: And differences I talked about before with, what's the damage threshold if I have to -- if I use 400 versus 650, maybe the -- say this was based upon the 400, then I could go to a 650,

maybe the 75th wouldn't damage anything. So more -- less frequency is going to be impacting my target, more things.

So every one of these things on, what is my heat release rate, what is my damage threshold, affects it. And almost everything hits that first tray.

CHAIRMAN APOSTOLAKIS: Now, we were told that 6850 tends to be a conservative result. Is that one area where this happens? Conservative results.

MR. MISKIEWICZ: I believe that this is conservative treatment, so it -- and this is where this -- if you were scoping, you would say, "Ah, nothing below -- I can take away 50 percent of my ignition frequency and that shouldn't affect anything."

What we find is very few things can pass here, because we start with such large heat release rates for the screening. And, you know, we bound everything, so there's nothing --

MEMBER STETKAR: I was going to say, coming back to sort of the larger concern about where you are putting in the effort, and where the conservatisms may lie, do you feel that the prescribed heat release rates in NUREG/CR-6850 are a larger

driving force in terms of the overall effort that you are expending than, for example, doing the circuit analysis?

You know, your example that if you didn't involve any of those trays at all you wouldn't need to analyze any of those circuits.

MR. MISKIEWICZ: Exactly.

MEMBER STETKAR: But in a pragmatic sense, do you have a practical feeling for how conservative those heat release rates may be relative to the real world where you might ignite those cables and really have to do the circuit analysis?

MR. MISKIEWICZ: I am not a fire modeling or a fire protection person.

MEMBER STETKAR: Okay.

MR. MISKIEWICZ: But what I understand is that the answer is, yes, it is a -- there is a very large difference between the testing data of theoretical maximums and what the typical fires we are going to see in plants are.

MEMBER STETKAR: A little bit of what I am interested in is sort of where we can give direction to the staff, especially in the research area where, you know, a lot of what they have been doing is more cable fire testing and looking at additional

probabilities of multiple induced hot shorts, whereas perhaps a lot more of the measuring heat release rates for a lot of representative --

MR. MISKIEWICZ: Configurations might in fact be --

MEMBER SIEBER: But there is a lot of data on that, too.

MR. MISKIEWICZ: On that, actually, EPRI is currently working on some things. It is pretty much driven because of results we have been given that we are --

CHAIRMAN APOSTOLAKIS: 6850 I understand is under revision, isn't it? I mean, the EPRI representative attacked it here.

MEMBER BLEY: Well, what I heard was their plan is to continue research and development effort. So that would imply eventually --

CHAIRMAN APOSTOLAKIS: There could be a revision.

MEMBER BLEY: -- there could be a revision, if they learn something.

MEMBER STETKAR: It is not in progress. It is planned after more --

CHAIRMAN APOSTOLAKIS: After more information.

MEMBER STETKAR: More information and results from the pilots.

MR. MISKIEWICZ: You may want to talk to, you know, the fire research because they have done a lot of this testing, but the problem is they can't get a fire to sustain --

CHAIRMAN APOSTOLAKIS: Yes.

MR. MISKIEWICZ: -- with a closed cabinet. So we put in accelerants and then we say, "Here is the data." And real life is we don't have accelerants, and the frequencies and the sizes are probably a lot lower.

Go to the next slide real quick, please.

What we will try to do next is we will -- you know, we have done some modeling where we are trying to say -- if we can justify that our cabinet doors are going to stay on, and we know what the vent sizes are, both of which right now is a -- there is no consensus method on how to do that, so it is a challenge, and we have RAIs saying, "Why can you call that cabinet closed?" You know, because it's got these thumb screws and -- but we call it closed. We can put, you know, where is the fire in the cabinet, how big can the fire get, look into the combustibles in the cabinet.

If the fire -- heat is coming out -- mainly out of the vents, we may or may not damage those cable trays. And we have done analysis on that, and that is kind of where we are going is when we get to this type of analysis we expect a lot benefit. And we have done bits and pieces of this.

When I said over 70 target sources, we have done something. We have done this type of thing to them where we have opened up the cabinets, tried to quantify that there is not enough ignitions combustible to get a 700 kW fire or, you know, just try to build a case that the cabinet doors are closed, that we can't sustain a fire.

So we have done a lot of that although -- but we believe with a better template developed we can probably have a lot less impact to our cable trays and our secondary --

MEMBER STETKAR: More realistic results.

MR. MISKIEWICZ: Because we don't see as many big fires as what every source would lead us to here.

MEMBER STETKAR: Okay.

MR. MISKIEWICZ: So I don't want to spend a lot of time.

Other remaining uncertainties, things that

are problems. The ignition frequency method in 6850 has a per plant frequency. So your cabinet frequency is 10^{-3}, and to get your frequency per cabinet you count them and then divide. So if you have a plant with 1,000 cabinets --

CHAIRMAN APOSTOLAKIS: You are in good shape.

(Laughter.)

MR. MISKIEWICZ: -- 100 cabinets.

And that is -- you know, it is -- statistically, it is not a bad thing to do. But when we are trying to get risk insights, the uncertainty in that is big on a plant-to-plant basis.

You know, you may have a statistical uncertainty around that number, but you divide by five, so it is going to create some problems going forward in the future, because you could have two identical scenarios, and in one plant it is a lot worse than this identical situation in another plant because of the method that we are employing on that.

MEMBER BLEY: Let me take you back to George's first question about, "Steve, can you tell us how a pilot works?" I assume the agreement in doing the pilot is you will follow the methodology as it is.

MR. MISKIEWICZ: We had to use an

acceptable methodology to meet the standards.

MEMBER BLEY: The next piece of that, are you -- as you get toward the end, are you putting together a critique of the aspects of that methodology that you think have led to substantial conservatisms or other problems in carrying it out?

MR. MISKIEWICZ: I don't think we have specifically done it, but we have been working with NEI, and we -- you know, we are very involved with the 805 and the fire PRA task forces. We are doing this.

MR. ERTMAN: This is all part of it. We see this as part of that communications, and it puts in the potential methods that EPRI is developing, and so forth. Part of that process is the main way that we get into --

CHAIRMAN APOSTOLAKIS: But it would be nice, though, to have a --

MEMBER BLEY: Well, having it linked to real efforts is much more convincing later on that more general statements of -- that the fires are too conservative. But, you know, specific linkages are much more helpful.

MEMBER STETKAR: Dave, everybody likes to beat up on the ignition frequency as being excessively conservative. Did you do any type of Bayesian

updating with plant-specific fire experience from your plant and try to differentiate among different ignition sources? For example, different types of cabinets based on your own plant experience to see if that --

MR. MISKIEWICZ: We didn't, but for the most part it would be zero Bayesian updated against the numbers. So that's evidence.

CHAIRMAN APOSTOLAKIS: Zero is fine.

MR. MISKIEWICZ: We didn't do that at Harris. I think some people may have done that. That's also the amount of, you know, the --

MEMBER STETKAR: Well, that's true, but one way is to look at different experience with different types of cabinets, for example, despite the fact that you start out with an amorphous, homogeneous population. I'm just curious whether you have done any of that.

MR. MISKIEWICZ: Right.

MEMBER STETKAR: And if the standard kind of requires you to do that, if you have had a fire, which makes it go up.

MR. MISKIEWICZ: The standard probably doesn't know a lot about Bayesian analysis either.

MEMBER STETKAR: Right.

MR. MISKIEWICZ: You know, I want to try to get -- move along.

CHAIRMAN APOSTOLAKIS: Talk about the heat component.

MR. MISKIEWICZ: Yes. I don't want to skip the other ones that are very important to us is, you know, coatings and other barriers. 6850 tells you you can get credit for them. It doesn't tell you how much, so you could get into -- it becomes a huge debate if you try to credit that.

CHAIRMAN APOSTOLAKIS: It's a smart thing to do. They say, "Do it," you do it.

MR. MISKIEWICZ: We do it, and then we say we think we get this, and somebody doesn't agree.

CHAIRMAN APOSTOLAKIS: Well, this is my problem. Remember earlier I raised the question about how you calculate the delta risk.

MR. MISKIEWICZ: Well, for Hemyc it's easy, because -- well, I say easy --

CHAIRMAN APOSTOLAKIS: Well, here it is, and there it's not. I mean, it's not a matter of just having a required separation of 20 feet and you only have 15. I can see how you can do that with the fire models. But when you are talking about barriers, I mean, does anybody know what the probability of a

particular fire going to the other side of a three-hour barrier is? I mean, three hours, two hours, these are more legalistic things. It's not -- and that's where the uncertainty is. There's huge uncertainty.

MR. MISKIEWICZ: They test those barriers, I want to say, like to 10,000 --

CHAIRMAN APOSTOLAKIS: They make up certain rules --

MR. MISKIEWICZ: Right.

CHAIRMAN APOSTOLAKIS: -- as to how to declare them as a three-hour barrier. But these rules -- I mean, nature doesn't follow those rules. Nature has its own equations. And that is where I am having a problem with the accuracy of a delta risk calculation.

But anyway, that is not your problem. Let's go on.

MR. MISKIEWICZ: The human component -- we talk about the problems with HRA. I think there is a lot more aspects of that also. There is the fire manual suppression. You know, how long from the time we get an alarm does somebody actually get there? There is variability on that.

CHAIRMAN APOSTOLAKIS: Now, manual

suppression is not a recovery action, right?

MR. MISKIEWICZ: No, right. And we have curves that tell us how to do that.

Procedure response -- here is potential recovery action, but not just recovery action, it is, when do we initiate that, the command and control decision? You know, the T_0 problem. For PRA, you know, we -- it's not like somebody can say T_0 is here. We have to factor that T_0 into the available time for all of these actions and probability space. So --

CHAIRMAN APOSTOLAKIS: Absolutely, yes.

MR. MISKIEWICZ: -- it is a very hard task to try to manage. Actually, when you get into the command and control where, at what point do we make the decision to go to the procedure? You know, so it is very hard to do from the PRA standpoint. And that leads into the -- you know, some treatment for alternate shutdown.

You know, in the PRA space, we really don't have a lot of guidance on treating alternate shutdown. It is an approved action, so the -- it was good we didn't have to calculate a delta CDF on that one. But it is -- you know, it is a compliance-based set of actions, and, in a PRA world, you know, it would be nice to have some better ideas on how to

treat that.

And then, lastly, uncertainties, we have some FAQs, and they are still -- you know, they are published as interim solutions. So we are following those, but we expect those to evolve still.

Okay. Risk recovery actions -- here is what Harris did for recovery actions. We reviewed all of our fire procedure recovery actions, identified potential adverse impacts, so we looked through all of the recovery actions. And I'm using that -- the already-defined definition of "recovery action."

And any actions we found at Harris that were adverse, meaning were shutting off a perfectly good pump or valve or something, we either eliminated them or we conditioned it to make it non-adverse. Only shut it off if it's spurious and was creating a problem. So that is the procedure. They wouldn't just shut it without giving it some specific direction.

Then, we also -- we did not credit any of the recovery actions in the PRA analysis, aside from there was a term in there for --

MEMBER STETKAR: But that is not a recovery action.

MR. MISKIEWICZ: The alternate shutdown is

not a recovery action, but we still had to model something.

CHAIRMAN APOSTOLAKIS: But if it's in the PRA, is that a recovery action?

MR. MISKIEWICZ: What is that?

CHAIRMAN APOSTOLAKIS: If it is in the PRA.

MR. MISKIEWICZ: We didn't put them in the PRA. So the first thing we do is made sure that we had no adverse actions.

CHAIRMAN APOSTOLAKIS: So you don't have any recovery action?

MR. MISKIEWICZ: Didn't credit any of the potentially beneficial recovery actions in the PRA, but what we did do is in the third bullet -- is we went and found the cables that were causing the need for the recovery action, and we identified those cables as variances from the deficient -- from the --

CHAIRMAN APOSTOLAKIS: Did you have to do a delta risk calculation for any recovery action? Did you have to do that?

MR. MISKIEWICZ: Not specifically. We did it on the cables that would cause the need for a recovery action. We didn't credit any recovery action. The only way that --

CHAIRMAN APOSTOLAKIS: There was --

MR. MISKIEWICZ: -- was if the cable hit made it spurious.

CHAIRMAN APOSTOLAKIS: When you say that you didn't credit any recovery action, that means you didn't have any recovery actions, is that correct?

MR. ERTMAN: No, we didn't have recovery actions per the definitions in 805. They were not explicitly modeled in the PRA, because of this process we used. In other words, as Dave said that they didn't provide a negative impact, and they weren't a significant improvement that we wanted to measure. So we didn't put them in the PRA.

MR. MISKIEWICZ: We started with, let's assume we don't have any. So if something spuriously actuates and causes a problem, we let that problem ride. So we are just taking the hits on the cables. It's a cable that doesn't meet a requirement.

CHAIRMAN APOSTOLAKIS: Right.

MR. MISKIEWICZ: So then we do our delta risk. If the risk -- delta risk is acceptable without crediting the recovery action, then we are taking that whole delta risk. We are not saying we are also going to have a recovery action that offsets that negative risk from the cable hit, and then do a delta CDF on

the recovery action. We just did it on the cable itself; hence, we don't need --

CHAIRMAN APOSTOLAKIS: So the net result was that you didn't have to do any delta risk with specific recovery.

MR. MISKIEWICZ: Right.

CHAIRMAN APOSTOLAKIS: Okay.

MR. MISKIEWICZ: We bounded it by the cable that would have initiated --

CHAIRMAN APOSTOLAKIS: They bounded it a different way.

MEMBER STETKAR: Yes. You sharpened the pencil on a cable --

CHAIRMAN APOSTOLAKIS: Yes, that's fine.

MR. MISKIEWICZ: Which would bound the risk of the recovery action, because we would only have recovery actions that should be beneficial to us.

MR. ERTMAN: And it's a risk-informed rule, so we did look at defense-in-depth. And many of the actions are still in the program as recovery actions, because of that, so --

MEMBER STETKAR: Did you look at -- you know, you said you looked at whether any of those actions that are in the program, still in the program, could have an adverse impact, and you have assured

yourself that there aren't any.

MR. MISKIEWICZ: We either took them out altogether, or if -- you know, if the safe shutdown folks really wanted it, we said, "We will only do it during that situation you really want it."

CHAIRMAN APOSTOLAKIS: Okay. Next slide maybe? That's the last slide, I think.

MR. MISKIEWICZ: Okay. Remaining challenges. Yes, these are things that are kind of not piloted yet. I don't know how much we -- a lot of things we are doing alludes to them, but preliminary risk screening as the makes plants changes. You know, every time we make a change -- we can't requantify this whole entire PRA every time we make a change to see what is going on. So they are coming up with some methods where we could -- you know, we have to do this screening.

CHAIRMAN APOSTOLAKIS: Your PRA is in the computer?

MR. MISKIEWICZ: It is computerized, that's true. It is still a very large effort.

MR. ERTMAN: There is pieces of managing the program that we still need to work through the first time.

MEMBER STETKAR: Back to the circuit

analysis, just quickly, the -- when you evaluated multiple induced spurious actuations, or whatever they are called, did you use the guidance in NEI 00-01, Rev 1 or Rev 2?

MR. ERTMAN: We used I guess equivalent process or the same process as in Rev 2. But we did and got through that stage long before Rev 2 was even written. So the 805 plan says --

MEMBER STETKAR: They didn't --

MR. ERTMAN: But we did do a very detailed and thorough process, and it is very comparable to that.

MEMBER STETKAR: In terms of limitations of numbers of spurious actuations, intra and intercable.

MR. ERTMAN: Right. We didn't really limit to two or anything like that.

MEMBER STETKAR: Okay.

MR. ERTMAN: We looked for what was the --

MEMBER STETKAR: I was just curious.

MR. ERTMAN: It was definitely equivalent to it, but it wasn't available --

MEMBER STETKAR: Yes.

MR. ERTMAN: -- when we did it, so we did something very -- the same thing, very similar.

MR. MISKIEWICZ: We have had cutsets with five, six, seven.

MEMBER STETKAR: No, that's fine. That's what I wanted to hear.

MR. MISKIEWICZ: Cumulative risk tracking -- we have talked about it. We haven't done it yet, so we are not exactly sure how that is going to manifest in the end.

Methodology updates -- this is the one that I am a little not sure of. We talk about, what is the baseline fire PRA? But if we change heat release rates on cabinets, do I still get to keep my baseline fire PRA that I have now, or do I move it to the one with the lower risk?

MEMBER STETKAR: Oh, yes.

MR. MISKIEWICZ: And we are going to be improving methods, and our risk is going to go down.

CHAIRMAN APOSTOLAKIS: Well, do you -- post-transition, you can still make changes? You have a delta risk credit?

MR. MISKIEWICZ: What is in a delta -- anyway --

CHAIRMAN APOSTOLAKIS: Right now you do.

MR. MISKIEWICZ: Yes.

CHAIRMAN APOSTOLAKIS: You do. Well, in

the future, you know, one of the reasons to change your methodology is, you know, to increase that available delta risk. But I don't think you will have to as long as the change gives you more credit.

MR. MISKIEWICZ: Right.

CHAIRMAN APOSTOLAKIS: If it is -- if they find that something was optimistic, then you have to change it.

MR. MISKIEWICZ: I don't know that it's a challenge as much for us to calculate this, to understand how that is going to be factored into the regulation aspect of things.

CHAIRMAN APOSTOLAKIS: Oh. This is a mystery how things factor into it.

(Laughter.)

MR. MISKIEWICZ: We'll get some questions for --

CHAIRMAN APOSTOLAKIS: We are still looking for that.

MR. MISKIEWICZ: The negative delta may show up again.

MEMBER SHACK: The cumulative risk tracking, I mean, you know, you sort of have to go back in history and --

MR. MISKIEWICZ: But that could end up

being a negative number.

CHAIRMAN APOSTOLAKIS: They have lots of room.

MR. MISKIEWICZ: Post-transition inspection process -- I'm trying to get into that, too -- is that this is going to be a little bit different. Now we have this fire PRA, and when there is fire issues that come up, you know, do we use the 805 fire PRA? It's not really totally compatible with the significance determination process that is used right now.

So we are expecting there is going to be some discussions going on as we get into that as to this has been approved and that. So those are challenges we still have to get through, and so it's -- we don't consider that we are --

CHAIRMAN APOSTOLAKIS: Now, what is the purpose of the pilot again? To form the regulatory guide? Is that the purpose, Sunil?

MR. WEERAKKODY: To develop and define the regulatory infrastructure.

CHAIRMAN APOSTOLAKIS: So obviously you cannot take these lessons, unless you already have, lessons learned into this version of the guide.

MR. WEERAKKODY: To this regulatory guide

we already have done it.

CHAIRMAN APOSTOLAKIS: Okay.

MR. WEERAKKODY: But it -- we are not saying we know everything, but if I point to a couple of the other things, like the inspection scope/focus, that is -- we also look at that also as the pilot process.

CHAIRMAN APOSTOLAKIS: So a year or so from now, a year and a half maybe, the guide will be updated?

MR. WEERAKKODY: If necessary, yes.

MEMBER STETKAR: Some of this -- if you get to the next slide, there is a potentially troubling item.

CHAIRMAN APOSTOLAKIS: Which one?

MR. ERTMAN: The next slide, 25.

MEMBER STETKAR: Well, I would like to understand what this slide means, because if the experience from -- the peer experience has been factored into Rev 1, are these negative issues?

MR. ERTMAN: I guess part of what I saw that we were describing today is, what are some of the impacts of the Rev 1? Many of them I guess came to us or dissolved or developed or discussed during the RAI process. I mean, so some of the things that we are

doing in the RAI responses, were are moving to Rev 1.

But part of what I understand, what is the impact of Rev 1 on a transitioning plant? I mean, that -- and these are just some of the major areas that we had some concerns. I would say in general we believe that the Rev 1 is a step in the right direction, but because of these things that we are still working on the details on, I think that there will be -- need to be another revision -- Rev 1 for -- I mean, another rev, excuse me, for the plants going down the road on this.

You know, in other words, future plants would have more stability and direction to get it more clear exactly what is needed. So I would recommend that -- plan for a Rev 2, you know, but -- so this is definitely a good, you know, step in the right direction, though.

MEMBER STETKAR: What I wanted to understand was, I was concerned that the bullets on this slide might imply that you, because of your experience and all of the effort that you have put into your study, now feel that additional work is required to comply with the current Rev 1.

And I guess I didn't hear you saying that these --

MR. ERTMAN: Well, there has been and there is additional work required for the current Rev 1. I mean, that has come in through the request for additional information to us, and other plants will be doing that work. For example, a change evaluation versus risk evaluation, it is a retool of the terminology more than the actual steps that we do to do the work, because we did look at the risk impact and defense-in-depth, and so forth.

We looked at risk evaluations against the compliant plan under 805, you know, the deterministic. And then, under the change evaluations we did look under the compliant plant requirements today, but the difference in that really is pretty minor. But it is a retooling of the process.

MEMBER STETKAR: That is post-transition.

MR. ERTMAN: This is even during transition. We came into this using -- we said we would use a change evaluation process for the risk evaluations.

MEMBER STETKAR: Ah, okay.

MR. ERTMAN: And, you know, we understand we have some more guidance in Rev 1 that says, "No, we should be using risk evaluations." So we are retooling the process to do that.

I think for Harris the way that we did the bounding reviews and the risk recovery actions using the cable damage or cable hits makes the work less for us than maybe for some other plants. But it is still an impact.

You know, risk of recovery actions, there is definitely a change of direction from Rev 0 of the reg guide. The way we were handling that required some additional thought and some process issues, but there is also in Rev 1 I guess some details on -- and I would say heading towards stability on defining primary control stations and the fire-affected versus the protected train, the equivalent of the 1.189 green box and orange box.

And so those things did help us narrow down on, what are the risks -- what are the recovery actions we need to evaluate. But at the end of the day, the PRA model is a full plant model that we can look at certain pieces, but it's important that we can understand the risk in the plant.

And then, the license condition was discussion. I think Steve discussed that. So it was important that we understand the process for when we're doing transition, and I think it goes that direction -- there are some nuances in which section,

but it's the right direction.

So at the end of you -- you know, we do recommend going forward with Rev 1, but it is definitely a work in progress that there is going to be other clarifications, in my view, likely that will come out of this before we are done, but -- and --

CHAIRMAN APOSTOLAKIS: You are done.

MR. ERTMAN: And I'm done.

CHAIRMAN APOSTOLAKIS: Thank you.

Let me ask the members -- we can continue with Duke Energy or take a lunch break now, since we are approaching 12:00.

And do the Duke people object to that?

MR. ERTMAN: Whichever way you want to go, George.

CHAIRMAN APOSTOLAKIS: You don't have any planes or anything?

MR. ERTMAN: No.

CHAIRMAN APOSTOLAKIS: We appreciate that. Do you want to take a break now?

MEMBER BLEY: Sure.

CHAIRMAN APOSTOLAKIS: Okay. So, unfortunately, for the first time in my tenure here, I will not give you one hour. I would say 12:30 we should be back. There is an absolute deadline at the

end of the day.

(Whereupon, at 11:45 a.m., the proceedings in the foregoing matter recessed for lunch.)

A F T E R N O O N S E S S I O N

12:30 P.M.

CHAIR APOSTOLAKIS: Okay, we're back in session and the next item is the Duke Energy perspective. Please.

MR. FREUDENBERGER: My name is Rich Freudenberger. I'm the safety assurance manager at Oconee Nuclear Station. This is David Goforth. He's the NFP 805 technical manager for the Duke fleet for all three sites.

We're going to give a little bit different perspective of the progress. We're in the state where we are still finishing up our final revision to our LAR and we will be incorporating some of the aspects to the changes to Rev. 1 so that we're going to go a little bit higher level and try to show you some of the impacts of the differences.

To start off on Slide 2, some background information, just at a high level. Oconee Nuclear Station is going through major upgrades after getting our renewed license application and getting the first round of additional 20 years.

We entered into a refurbishment program in the late '90s, early 2000s and there's a number of bullets under here. I'm not going to read them all, but just to show that the priority we put was safety

focused, looking at Emergency Core Cooling Systems and emergency operating procedures simplification. We reduced the time critical operator actions during events out in the field and in the control room as well. We removed nine pages from those efforts from those modifications. We removed nine pages out of the EOPs of manual operator actions.

The next set of upgrades, it talks about miscellaneous upgrades. I just want to call your attention to reactor building sump strainers. I equate to our strategy on that to be very similar to what our strategy is on NFP 805. In that, we had the capability to go and -- we had the room the in reactor building to put a very large sump strainer and while we were still figuring out the details and what the calculated surface area was that we would need, we just went in and said what's the biggest we can do, what will give us the most margin and then we backfit the licensing that was there. So we put in sump strainers that were on the order of 5,000 square feet, calculated that we actually need about half of that by the time we finished working through that issue. And this is one we've put behind as well.

So our mindset in the things that we're trying to do is trying to improve margins, reduce

operator actions from the other things that we're doing. There's a whole number of digital upgrades to our control systems that are all to address reliability, obsolescence issues. Many of them are completed. We're still working through our reactor protection system, engineer safeguard system, upgrade its plan. In 2011, we have a draft SE that we just got a couple of weeks ago.

CHAIR APOSTOLAKIS: Except for the reactor protection system, none of the others is safety related, right?

MR. FREUDENBERGER: None of them are direct safety related, but they have -- Keowee, the Keowee upgrades, that's right. Somebody said over here Keowee. The Keowee upgrades were safety related and required the exciter and the governor and the controls there were safety related. But other ones like the control rod drive system, you know, we had reliability issues and would prevent challenges to safety systems. So the system itself isn't safety related but we're getting that experience with digital systems and understanding how to install them in the plant, some of the problems you run into it and are making improvements that do impact safety, even though the systems aren't safety related.

MEMBER SIEBER: Could you tell me if your digital systems are more reliable than the previous analog systems?

MR. FREUDENBERGER: Clearly, our Integrated Control System is -- let me step back. I can't hear myself any more. Our Integrated Control System which is overall plant control system, from component failures prior to that upgrade we would have one to two trips per year across the three units from component failures there. And that was one of the ones that was done very early on. Since that time we haven't had -- we had a couple early on, but over the last four or five years, we've had no trips as a result of problems from the digital Integrated Control System. That's just an example. But they're more reliable as a whole.

MEMBER SIEBER: Thank you.

MR. FREUDENBERGER: The last thing on this slide, just touching it quickly is the reactor vessel head replacement. And to put that into perspective, the first column or the first category is refurbishment project, our overall refurbishment project costs are approximately three quarters of a billion dollars. The steam generator replacements and reactor vessel head replacement was about half a

billion dollars.

That gets us into Slide 3 where we're talking about further major modifications that we're taking on to the station that in the early 2000 time frame, as we transitioned to ROP, gut our other insights from -- and understood our real risk, that our SSF, our standby shutdown facility which was originally constructed to deal with Appendix R, turbine building flooding and sabotage, was the single largest contributor to risk to the operation of Oconee. We were considering actions to help reduce that so that we went into a conceptual design study to improve the overall risk of the station and reduce the risk worth of the SSF, but also at the same time, we had three outstanding old licensing basis issues, is the way I would put it. The criteria associated with Appendix R and multiple spurious shorts, we had a couple of other non-conformances that were outstanding that we were contemplating resolving through modifications or through licensing actions.

And then we had Torado and HELB that were issues that had been reviewed, re-reviewed, looked at over a period of time and we were trying to come up with long-term lasting solutions and solutions that we could relicense and would improve the risk of the

station and have a licensing basis that would stand the test of time.

So with that common goal, in the 2004 time frame, we did this conceptual study. Out of that conceptual study, we came up with the idea that there's this common risk area in the turbine building. We have a common turbine building for all three units and our emergency power system, the 4160 switch gear and emergency power system comes through the turbine building into the aux building. So that's the common area that we're trying to deal with. So from that, Tornado and HELB, the concept for our Natural Phenomena Barrier System and protected service water projects was developed.

We go on to the next slide, Slide 4. This shows, highlights some of the areas for the Natural Phenomena Barrier System. This system is under construction right now. There's licensing actions in progress to support it. This diagram also shows the SSF and how it interfaces into the plant. The dotted lines are buried trench for the electrical. It gets into the plant. And you see that it comes from -- look at plant north, primarily from the west side of the plant into the station through the west penetration room into the reactor building to feed

steam generators and do primary inventory control to maintain the plant in Mode 3. So that's the SSF. I wasn't going to go into more detail than that unless you have questions.

The next slide has some discussions about the protected service water. There's three pictures that I have associated with protected service water. This is a system that was conceptualized and now is the process of being constructed. This system is primarily an electrical system that powers components needed for safe shutdown, duplicates the function of the SSF using existing components in systems within the aux. building. So it provide basically the same function. It's redundant and if you look at this, where the electrical distribution comes in, it avoids the turbine building. It would bring all the power and the 41.60 switchgears in a new building that's on this slide is off to the right. It's in blue. It says new PSW structure. That's where the 41.60 switchgear to support this new system is located.

And one other feature I just want to point out, out of this, we also have a backed up power supply which will be able to be fed from either Keowee or from an offsite station. We have a station that's about 26 miles away that has two gas turbines that can

be aligned in a dedicated line to the station. So those are the two sources. The normal source will be that dedicated line from the other station and the emergency power will be an underground feed from Keowee. So that structure and the feeds, the emergency feed to it are tornado protected.

MEMBER SIEBER: Does the hydro plant operate all the time or does somebody up here start it?

MR. FREUDENBERGER: It has emergency start capability from the control rooms and it is not operated all the time. We control its availability for commercial operation based on activities at the station.

MEMBER SIEBER: But it actually was built to provide an onsite in the power grids, right?

MR. FREUDENBERGER: That's correct. And it still has the capability to do that. We call it commercial and it can operate in a commercial mode supplying the grid, or it can operate in emergency mode and just feed the station.

MEMBER SIEBER: And that's what, 20 megawatts, 40 megawatts?

MR. FREUDENBERGER: Jason, help me?

MR. PATTERSON: I don't have a design

drawing, but my recollection is it's about 80 megawatts per unit. However, there is a limitation in what it feeds one of our transformers which is about 20.

MR. FREUDENBERGER: That's right.

CHAIR APOSTOLAKIS: Can you identify yourself?

MR. PATTERSON: Jason Patterson of Oconee Nuclear Station.

MEMBER SIEBER: Thank you. That's what I thought it was.

MR. FREUDENBERGER: Okay, so it is primarily electrical, but one of the major reliability and risk-improvement features of this is the underground feed from the PSW power supply that goes to the SSF. One the reliability issues associated with that, as I said, is the reliability of the diesel. So if you have diesel failure, we will be able to power either train of safe shutdown equipment from the SSF through that SSF equipment or using the PSW equipment.

The next slide, Slide 6, the mechanical scope, and it shows that inside the auxiliary building we'll be upgrading some existing pumps that will take suction from embedded CCW piping and be able to feed

the steam generators, pressurized steam generators. Right now that pump is only capable of delivering about 150 pounds discharge pressure. There is a one line that goes over into the turbine building to explain that. That is a connection to condensate-grade water so that we will be able to do testing and feed the steam generators and the system will be laid up with condensate-quality water in it. It will be all stainless to handle the raw water, but it will be laid up with condensate quality water from the secondary system.

And it will be -- that portion of the term building will be isolated during normal operations. That's all I had to say on mechanical unless there's questions.

The last page talking about protected service water really kind of goes to the question of Keowee and it's availability. Right now the Keowee emergency start circuits from the Unit 1 and 2 control rooms and the Unit 3 control room also pass through the turbine building. All the support systems that we need for this are being rerouted so that any cabling associated with the vital power and the vital systems that will support operation from the control room are being rerouted outside of the turbine building as well

in support of using the PSW system from the main control room.

So the discussion we had about achieving safe shutdown post-fire, when we were accrediting this system versus the SSF, one of the key design features was to have all the instrumentation and controls in the main control room, so you don't abandon it unless you're in a situation where you have to. So you can either have normal systems or you can have PSW out on a side panel, but you will also be using instrumentation from the normal vital systems to do that. So you'll be doing it inside the main control room, one of the two main control rooms, Unit 1 and 2 or the Unit 3 main control rooms.

That's why I intended to tell you for background with a similar strategy to what we did with the emergency sump screens, while we were working on the licensing and working out the licensing for where we would end up with resolution GSI-191, we just went and put a system in that gave us lots of margin.

The intent here was to do this as a risk reduction mod, but we incorporated insights to be able to deal with tornado, our high-energy line break and the transition and at the 805 by heading down the path to go get the system installed. It's currently

scheduled and committed to be completed by the end of 2010. So that's where we're at right now.

MEMBER STETKAR: Rich, you mentioned -- I am assuming that you are going to show that this system gives you quite a bit of benefit in the fire risk area. Did you use any particular insights from any fire risk analysis work for determining, for example, routing of cables or is that a separate consideration?

I'm curious about whether the fire risk assessment process has -- where you are in that process relative to the design of this system. You said this is being installed, even as we speak.

MR. FREUDENBERGER: As we speak. So the strategy that we used as we were building, we clearly did not have our fire PRA complete. We do have plant-wide fire PRA. In fact, we have three fire PRAs, one for each unit because we originally went in to the NRP-508 project expecting that we would do one fire PRA and mirror it for the other units, but we found enough differences that part of the scope increase that we incurred was saying to do the modeling that we wanted to do, we had to do all three. So we have three unit-specific fire PRAs.

The -- how were dealing with this in

particular is the main barrier is to get -- the main risk is to get the -- any of the instrumentation out of the turbine building and route it in the aux building. So trying to maintain separation between the SSF and PSW because they're used to mitigate fires in different areas, if there's any cases where we were going to have to route cables associated with PSW near cables from the SSF and if you just conceptually, you can see that the SSF comes in from the west, PSW primarily comes in from the east. That was an attempt to do that. So the areas where we do come closer together in cable spreading rooms and equipment rooms, we went in using deterministic criteria in identifying anyplace where we couldn't maintain deterministic criteria for cable separation as we did the electrical design for PSW.

MEMBER STETKAR: Great. Thanks.

MR. GOFORTH: If I may, Rich, the 805 team worked with the PSW team and what we did was we built in from looking at our fire PRA what assumptions or design requirements does this modification need to meet and we had those incorporated into the design. It's also modeled with a high level in our current fire PRA.

MEMBER STETKAR: You looked at the

deterministic requirements at least.

MR. GOFORTH: We also looked at risk. It is in our PRA.

MEMBER STETKAR: Thanks.

MR. FREUDENBERGER: One final comment. As part of overall what we're heading into doing, part of the questions were associated with the financial commitment associated with this. This project, for national phenomena barrier and PSW, as you can see, they're extensive construction projects and there's been a number of people from the NRC that have come down and toured to see what we're doing. These two projects, natural phenomena barrier and PSW are on the order of three quarters of a billion dollars. So that's the investment that we're putting in to improve the risk of the station. They provide -- from an early on, not using our fire PR that we have today, but when we did the conceptual design, the delta CDF is on the order of 10^{-5} that we'll get from benefit out of this.

I'm going to turn it over to David Goforth now and let him talk through where we are, more relevant to the NFP 508 project.

MEMBER SIEBER: Let me lead off with a question. Why did you choose to go risk informed on

fire protection in the first place?

MR. FREUDENBERGER: A number of different reasons, but we did have multiple spurious, becomes a complicated issue to deal with. It seemed like the right place to go, where the industry was heading. We had this issue, these issues that we're dealing with. I mentioned we had a couple of nonconformances that we're currently dealing with that we either needed to change the licensing basis or make modifications, so it was -- as we are doing these other committed modifications, it seemed like it was the right place to go to help us resolve those issues.

MEMBER SIEBER: You don't seem bashful about modifying your plant.

(Laughter.)

MR. FREUDENBERGER: We are not bashful about modifying our plant when it comes to providing a risk benefit and so we clearly try it to doing the risk analysis to support making the right modifications to the plant.

CHAIR APOSTOLAKIS: Good, okay. David.

MR. GOFORTH: All right. Now that Rich you the big picture, I'm going to focus this in on 805 for Oconee. Oconee was the first to volunteer to be a pilot back in 2005. As you've heard earlier, we've

had pilot meetings all throughout this process. Indeed, we had a pilot meeting yesterday afternoon here in D.C.

Originally, this project will take about two years and about $2 million. First estimates.

(Laughter.)

MEMBER SIEBER: How did that work out?

MR. GOFORTH: I'll let you know if you'll hang with me.

MEMBER SIEBER: I read your last slide.

MR. GOFORTH: Oh, did you? You know how it worked out.

(Laughter.)

MR. GOFORTH: I'm trying to build up to the end here. So at Oconee we had a few things different than Harris had to deal with. One of the first things being that it's a three unit plant and it's also an older plant. So went into a lot of new places that Harris didn't necessarily have to go and have to work through, but we did submit an initial LAR in May of 2008. However, we had what we called a draft fire PRA in there and the modifications weren't determined on account of that. So we updated that in October. We submitted everything that was needed for the LAR including modifications. The only thing we

didn't have done at the time when we submitted that was excruciating detail, how we were going to implement

the modification. We knew what we wanted to do, what we wanted to fix. We just didn't have the detail in there due to the time it takes to scope the modification.

So anyway, we followed up that LAR. That went in. It was done basically the same way Harris did it. If you look at the two LARs side by say, they basically look the same as you go through them.

We are planning on submitted a revised LAR by the end of January that incorporates the guidance from what we're here to talk about, Reg. Guide 205, Revision 1, and also, we want a more fully encompassed flexibility. It's alive in 805.

So we talked about this a little earlier, the guidance affecting 805. There were changes from Reg. Guide 1.205, Rev. 0 to Rev. 2. I'm going to show you the effects of those as we go through. Reg. Guide 1.189, it was recently approved to Revision 2. We're pulling pieces of that out to use. 1.174, we're using in a little different way now and applying it to fire areas and I'm not sure it was originally meant to be that way, but we're figuring ways to do that.

NEI 00-01 was revised from Rev. 1 to Rev. 2. And NEI 04-02 which really for those of us in the industry, that's our bible, how we do transition. It's been a challenge to try to keep it up with the regulations and guidance as it changes. I guess regulations haven't changed, but with the guidance and how we meet it. But we're trying to do that. That is normally changed using the FAQ process that's been discussed earlier. And when we turn in our -- the Oconee LAR based upon 1.205 Rev. 1, it will probably become more of the template that will go in 04-02 going forward. I'm not sure about that, but that's our current thinking.

The fire PRA methodologies, processes that are used, they're constantly being updated as we learn new things. Move forward. There's a lot of testing going on. When Progress Energy was up here, they talked a good bit about the fire PRA, so I didn't want to repeat that information per se, but we work closely with them, but one thing the NRC did say was well, if you don't like the results of 6850, let's find out what we need to do to do it. So as an industry, we're talking about maybe doing some additional fire testing to get some additional data that Dave Misciewicz alluded to earlier.

Also, the NRC is in the process right now of doing some DC circuit testing under fire, so we've got some new data coming out of that. I understand, I think that the last word I heard, they were talking about somewhere down the road testing fiber optic cable to ensure it's results. So we'll --

MEMBER STETKAR: Dave, are -- I'll follow up with you.

MR. GOFORTH: Yes.

MEMBER STETKAR: Are you using the guidance on multiple spurious circuit actuation in NEI 00-01, Rev. 2 in your current analysis?

MR. GOFORTH: As alluded to earlier, the circuit analysis part didn't really change. We did it during -- we used Rev. 1 when we did it. However, the pieces --

MEMBER STETKAR: No, no. I'm talking about the multiple spurious, intra cable, inter cable, numbers of multiple spurious.

MR. GOFORTH: Yes, we did use Revision 1 to it. However, at Duke, we have one difference and all our cables are armored cables, so we don't have the cable to cable interaction, but we had intra cable interactions that take place. So it was one of the differences between the two plants.

So what I want to run through here is if you break in a PA 805 down into the big categories of what it does, basically you start with reconstitution and I'll tell you what that is in a second and you work into your traditional fire protection program gets changed, your nuclear safety capability assessment comes which is really your new term for safe shutdown analysis. We've added a fire PRA to it. Non-pilot operations changes. The LAR, well, the ones that Harrison and Oconee turned in were pushing a thousand pages and we turned those in. And then the configuration control following that. Let me touch on each of those.

For reconstitution, most plants have a document safe shutdown analysis. They know exactly what the variance from the deterministic is. That gets them pretty ready to go into 805. At Duke, we had to go back in, especially Oconee. We didn't have as good a documentation as you would see in a more modern plant. So we want in to update all of those, so we really have a good base for where we're starting from.

One of the things you've got to remember, this thing is taking place over a couple of years, so you got to keep your analysis up to date. And as you

already heard, we like to change Oconee a lot. So that's a lot of updating we have to keep up with.

You also need to make sure you touch on the industry concerns that have been out there for a long time, 92-18 breaker coordination, the MSOs, operator manual access handbook, just to name a few of those out there. You want to get everything set, get it all nice and organized for your start transition. Not the way we did it at Duke. That's the ideal way to do it.

(Laughter.)

If you want to do it the ideal way, you do all this before you declare you're going to NFPA 805. The enforcement discussion kind of got everybody caught up and so everybody jumped on board that boat.

But one of the things you do when you also go through this, you want to ensure all your original assumptions when you are licensed to operate, make sure all of those are still valid, that something didn't inadvertently get changed that might have invalidated that. So that's part of getting things documented.

But just doing reconstitution is a significant cost in itself. It's up in the millions to get that done.

MEMBER RAY: There are other benefits, though, just than what you are going to get out of this?

MR. GOFORTH: Absolutely. We understand our fire protection licensing basis. I mean from here to here, our knowledge basis has expanded.

MR. FREUDENBERGER: The cable routing in particular in the turbine building was used not only for the analysis we did for NFPA 805, but it was used for analysis we did for HELB. When we went back and looked at our HELB licensing basis and reconstituted that, there was -- it was pretty clear that the insights were focused on mechanical interactions and there wasn't the electrical interactions modeled as well. So having that cable data and pipe width impacts in the cable trays and knowing what was in those cable trays was beneficial there as well.

MR. GOFORTH: To give you the 30-second spin on where we went from to where we are now is if this was a room at Oconee, we'd look in here and say well, there's no SSF cables in here. Must be safe to shut down on it. We didn't necessarily look to see what was in the room. We looked to see what was not in the room. And of course, when you start going in MSO space that's kind of a disadvantage, so our

knowledge base just increased greatly.

But for the traditional fire protection and if you looked in 04-02, we call the B-1 table for short. We started out with some limited calculations supporting original design basis. Some was in SERs. It was scattered everywhere. So we got it all in one pot now where it's easy to see and understand what it is.

We're looking at co-compliance to make sure it's well understood what codes the plant is built to or what codes do we want to meet as we do modifications.

We ended up with a new calculation. As I said, it brings all that together and when we submit it to LAR we wanted to make sure the NRC clarifies anything we might have had in our licensing basis. It was gray before and we want to carry forward. We also want to make sure anything when we went through Chapter 3 of NFPA 805, that NRC has a chance and say if it's not exactly matching what's there, they can approve what we do have. An example, Oconee uses high pressure service water instead of dedicated fire pumps and it was originally licensed that way. So that's one of the things we want to make sure it's clear between the two of us because the NRC's number one

goal and our number goal is we want a clear program that's easily auditable and everybody can understand.

Just some of the quick lessons we learned there. All this stuff is extremely time-consuming. It's really big to get a team on it and get it in place and have enough time to work through it. The original assumptions, I said, there again, you know, make sure they're valid and just the B-1 table by itself to just do a traditional fire protection, it was probably low six figure number to do that.

And make sure in the LAR we -- something we learned when we sent our LAR up to the NRC before is in an effort to try to remain open, we put in everything that was an item to do. And what we ended up doing was clouding the situation so what we did was we now know that the only stuff that needs to go in there is stuff that needs NRC approval, stuff we keep back in our Corrective Action Program.

MEMBER BLEY: That causes some confusion.

MR. GOFORTH: What do you want us to approve, you know? Lesson learned there. Had the best of intentions. It just didn't quite work out.

So the Nuclear Safety Capability Assessment, NSCA we call it for short. At Oconee, it's a noncompartmentalized fire areas there that can

result in multiple unit events. So that's part of what we had to look at, different from Harris. Oconee is going to react different and you have three units that can react. Of course, on top of all that, you heard earlier and we'll touch on it later, we ended up with not just one fire PRA, but three of them, in essence.

The VFDRs, variations from deterministic requirements, we want to make sure those are identified going into this because that's where you get to use your 805 tools now going forward.

We originally did it, like Harris, we did change evaluations when we turned in our LAR, their fire risk evaluations and we're going back and correcting that in the LAR. They're pretty close, but just some very subtle differences between the two.

We have a manual action feasibility calc now that was performed for the recovery actions, something we didn't have before, so feasibility is well documented. We ended up, as we did, we had to generate some new thermal hydraulic calculations. Didn't originally account for that, but as we worked through the PRA and checked our analysis again it turned out we needed these.

And then with regard to 1.205 primary

control station, that was one of the biggest challenges for us. That is one of the reasons we're going forward with Revision 1. With an SSF, that is a big help to us to do that. We need to establish a good, solid mission time now for Oconee in the LAR. We didn't do that with either station real well to begin with. We need to determine the recovery actions to demonstrate the availability of a success path. We're going back through that with regard to 1.205 now and evaluate the risk of those.

CHAIR APOSTOLAKIS: So you're going to tell us how you evaluated the risk of recovery actions?

MR. GOFORTH: Can you hold that until I get to the PRA?

CHAIR APOSTOLAKIS: All right.

MR. GOFORTH: If you want to know now, I can tell you.

CHAIR APOSTOLAKIS: I can hold it. I will not forget it.

(Laughter.)

MR. GOFORTH: We'll see how well I do.

CHAIR APOSTOLAKIS: Sure.

MR. GOFORTH: So what are the effects of going to Revision 1 of 1.205? It turns out it's a

tremendous amount of work. Clarifying the primary control station, all these supporting calculations we've generated. Now we classify recovery actions differently now, so we go back and do that.

There's a new process now for how you look at things at power. This is based right out of NFPA 805. And also how you classify when you're not at power, how do you treat that and that's one of the items -- we had a pilot meeting on yesterday to share how we think it should be met and making sure that the NRC has had a chance to look at that and weigh in on it.

You know, we now have safe shutdown database, fire risk evaluations and -- all these calculations have to be revised now going forward. Remember, we already did them for the one LAR we turned in. Now we're going to revise them for that.

We've got to revise our recovery action feasibility. We've got to update the fire PRA. I can tell you the fire PRA folks, they don't work cheap. So we have a contractor doing our fire PRA and we have an in-house fire PRA staff that checks their work coming in.

And then once we apply all this, we have to look at the modifications we committed to in the

first LAR. Does that list still stand and what looks like now is it is changing significantly.

So lessons learned, the new Reg. Guide 1.205 guidance, it does improve the classification recovery actions. NRC, big thumbs up for that. We think it's a big improvement.

Development of B-3 table. IT's pretty much an iterative process as you go through. You go through, you fix something, you go through your fire area and then you find you may have fixed something, you may have created another problem coming here. So it takes a team going through that several times.

For plants that are transitioning to 805, following the pilots, it's really important to train those people on what it is they have to look for. Again, one of the reasons we want to get the guidance locked down. I trained my other two plants folks on two or three different methods now and I want to get it locked down so we can stick with one.

For the fire PRA and I don't want to dwell on this too much because a lot of it matches what Harris has showed you and we worked real close with them, but we did have a component selection and those were loaded into our database. We now have a list of all of our ignition sources in the plant which we

didn't really have before. We had an FHA, but this greatly expanded that data that's in there.

We have built into the fire PRA the compartment geometry now. That's real important when you're doing the modeling. The thermal hydraulic calculations, PRA did some using MAPP, needed more detailed analysis. We used RETRAN from our safety analysis group to do that.

We do all fire scenarios for a given fire, same as Harris. Ranked those fire scenarios. We credit plant features where needed, support safe shutdown. Did the fire risk evaluations. Those are being revised as we go through. It will be input for modifications now going forward.

When we used 68.50, like Harris, we used it, it came in somewhat conservative, went through. We had to go back in and 68.50 allows you to further any areas you don't think look right. To give you a prime example, when we first did the first five PRA for Oconee, using it basically 68.50 route, it focused the risk to around the main feedwater pumps due to the way the offsite power cables were routed through the station which we looked at. That just didn't seem like that was a good call on that. So we went back and did further detail fire modeling around there.

And it turns out that the risk is really spread a little more over the turbine building where all the offsite power comes through. And that's more of what we expected to find out. So that's why when you build your fire PRAs, you've got to make sure they seem like they're telling you a good thing.

Now what they do right now is yes, they're somewhat conservative, but I think the insights they're giving us now are very beneficial, especially mods and recovery actions and things like that. I'm not saying it doesn't need further work, but I mean when we first did internal events, it took a while to mature that. I think fire PRAs pretty much are going to be along the same lines. It's going to take some time to mature it out, but we do have at Duke, we have two working fire PRAs for -- one for Oconee, one for McGuire, and we'll get our peer review for Catawba in April and we'll have all our plants done there. So we do think it's a good start, just needs further growth and development.

MEMBER STETKAR: Dave, you may get to this so tell me to be quiet if you do. When Harris gave their presentation they spoke a lot about circuit analysis, or at least gave us very large numbers of detailed circuit analyses that they performed.

Your presentation so far seems to emphasize more of the fire compartment, fire modeling issues. Did you do more of that work relative to the detailed circuit analysis in your -- at least as far as you've gone so far?

MR. GOFORTH: We did that where needed. I mean we dig down into the circuits where needed. But with Oconee, we did end up with like a balance of plant was a big huge fire. So we broke it down. Kiang --

MEMBER STETKAR: Again, in terms of where people are putting their effort and really where the time and effort seemed was --

MR. GOFORTH: Do let me lead in that Kiang is the lead or the head guy at Erin Engineering for fire PRAs and an Erin Engineering did our fire PRAs, so that's why he's here so he can answer these kind of questions.

MR. XI: Kiang Xi with Erin Engineering and I guess for the reporter let me spell that for you. It's K-I-A-N-G. And if you can spell that without that help, I'm impressed.

In any case, David didn't go into a whole lot of details int he circuits, not because the work wasn't done. It's just that because the work wasn't

fruitful. It didn't actually generate instances where they're able to provide the benefits.

So the issue remains and I think it speaks back to a little bit of what you guys are kind of heading for. The volume of data and the volume of work that you're going through, you largely are, in many instances, on a plant-specific basis looking for the proverbial needles in the haystack trying to find where you can get a value for whatever you need to do.

So that is a constant that exists everywhere.

MEMBER STETKAR: That's good information. I mean the statement you said that you did a lot of work, but it wasn't very fruitful, I think is an important lesson for people to learn going forward. Because if there are areas and especially if there's common experience from the two pilots in areas where you have spent a lot of time and money doing things that you later concluded that really weren't necessary or there were other ways to effectively solve the same problem, that's really, really important

MR. XI: I think you -- I concur. I mean there's two pilots that have been. There's a handful of other plants that are building these FAR PRAs. The foundational amount of work that has to go on to

collect this massive data is largely a constant. And I suspect that as each of the plants go through, they may see some of the same things that you probably have seen in some of the other plants, but as time goes by, people discover there are other gems that are potentially hiding.

Now that might potentially suggest that someone who has actually done, may not have actually thought about that and may want to go back and see if that little gem exists in their analysis also. So there's a whole maturation process that the technology needs to go through that we just haven't had time to do yet.

CHAIR APOSTOLAKIS: But there will be a place or a repository where all these insights will be deposited in the future? People will not have to go through this again? Maybe that's -- I don't know maybe that's for NEI or for the staff. But I mean these are very useful insights that should be some place so in the future --

MR. XI: I think we'll eventually get there. I think there are a number of competing goals. I think there are a lot of people trying to rush to an end point and there's a lot of focus on getting to that end point because that end point is a fixed line

in the sand. So the reality is you have to pick and choose what you need to put your focus on. So I think there's some informal processes right now through the task force and through the status calls and through the pilot meetings and so forth to get it out, but I actually don't know of any concerted effort to pull together. I think there's been some weak discussions about potentially getting that together.

CHAIR APOSTOLAKIS: But eventually, it would be nice.

MR. XI: I agree.

CHAIR APOSTOLAKIS: I appreciate it. It's too soon.

MR. GOFORTH: Thank you, Kiang. Just to continue on because I didn't have enough room on that slide for everything I needed.

You now have to get your fire PRA folks and your safety shutdown folks pretty much put them in a room and get them talking and you need to get them talking the same language. Fire PRA guys talk this way and safe shutdown talks this way. Sometimes you've just got to lock them in a room and not let them out until they come to agreement. But our team did eventually come together with some really, really good work.

As it turns out, as we're going through this, there was some big concerns over how fire PRA does quality QA and what Appendix B does it. And we had to resolve that because fire PRA is now an input to Appendix B calculations. So how do you handle that? That's a big deal.

CHAIR APOSTOLAKIS: That's very good.

MR. GOFORTH: That's a great big deal. So we had to come in and show how we handle that, get it documented on LAR and everything. So I thought that was a bullet that was worth mentioning.

So what's 1.205 mean to us? We now have to put the risk -- calculate the risk to recovery actions.

One thing I will point out that we took a long time to work through is the fire PRA is built to evaluate the probability of core damage. Now if you look at NFP 805 which is in there that also adds your performance capability criteria, and now we're trying to measure these with this, so you're trying to use this, measures this, and it doesn't always work. That's why on our first LARS we ended up with a lot of stuff that was just bounded because the fire PRA isn't worried about meeting your performance goals.

CHAIR APOSTOLAKIS: Can you give us a

specific example?

MR. GOFORTH: Let me see if we can come up with a good one. We ended up -- Kiang, do you have a good example in mind?

Just sitting up here, my mind just went blank. I'm sorry about that.

MR. XI: Even if I say no comment?

(Laughter.)

CHAIR APOSTOLAKIS: NFPA 805 requires --

MR. GOFORTH: Okay, I've got one. Kiang, stay there in case you need to support me.

(Laughter.)

At Oconee, for some reason they didn't put MSIVs in. I forgot them or something.

(Laughter.)

Anyway, say you take credit for the main steam stop valves. I heard they're coming in, so they'll be in some time soon.

MEMBER STETKAR: They're going to put them in?

MR. GOFORTH: Yes. So one of the things we're looking at that meets the performance goal is you want to maintain your reactor coolant system parameters, inventory, pressure and that. So now, if you don't have main steam stop valves, then you have

in the turbine building branch main steam branch lines that go off every where. You've got stop valves. So these valves that I cite to branch steam lines are EMOs that we credit getting closed within ten minutes to isolate the steam.

In actuality, if you lose power, you probably wouldn't get them closed in three hours hand cranking them.

(Laughter.)

To be honest, you really wouldn't. I'm an ex-SRO, so I'm pretty familiar with that. So now from the PRA standpoint you are not going to damage the core if those valves don't get closed. However, if you're looking at say shutdown, nuclear performance criteria, you're not going to meet them because you're going to go way down as you cool down. And the system will recover. So that's a big difference between what PRAs are looking at and what you're looking at with performance goals. And now we're trying to build within the PRA ways to go ahead and examine those that need to be moved in and calculate the additional risk for it. And that's really what, part of what all this was about as we struggled to figure out how to do that between us and the NRC.

The rules, as Steve Laur said, they're

requiring you to do that and we thought when we turned in the first LAR, we had covered that with a bounding approaching. We can calculate the overall risk for fire, and it's built into it, but you'd have to dig down to find out how much that worth was in there. But once you dug it out, I mean and calculated it only, it can only make it better. So that's why we went with the bounding approach in the first LARs.

CHAIR APOSTOLAKIS: Can he sit down now?

MR. GOFORTH: You didn't have anything to add to that, did you, Kiang?

MR. XI: Just moral support.

MR. GOFORTH: You asked that, George, and my mind just went blank.

CHAIR APOSTOLAKIS: That's fine. I understand. So I'm still waiting for the recovery calculation.

MR. GOFORTH: For the recovery calculation?

CHAIR APOSTOLAKIS: Yes.

MR. GOFORTH: That's probably why I'll bring Kiang back up again.

(Laughter.)

Because as far as I know, we just went and had our PRA model them in there, but that's the depth

of my knowledge since I'm not a PRA engineer, but Kiang?

MR. XI: The approach that was done at Oconee for recovery action largely is the same as what was done at Harris. The analysis basically started off without necessarily biasing of the model by putting in all the credited actions.

There was one specific action or set of actions that was explicitly included. It actually is already in their internal events model and that is those actions associated with the SSF. So in that regard that is a single action that's in there. So obviously, for that particular item measuring risk for that is a fairly trivial matter.

But for all the other operator actions, recovery actions that are inthe fire protection program, it was the same approach as Harris.

CHAIR APOSTOLAKIS: Are you helping Harris as well?

MR. XI: No.

CHAIR APOSTOLAKIS: So independently you guys decide you have the same approach?

MR. XI: This direction in building fire PRAs had always been internal to us and error engineering, the way we've always done it.

Conceptually, when the whole 805 concept came along and this notion of trying to understand what the risk importance of it was, we understood that there were some challenges and HRAs and fire, so the idea was let's first measure what the plant risk is without any credit for them and then by definition we can focus our efforts on where they might become important and decide how to deal with it there.

CHAIR APOSTOLAKIS: So you have decided to stay away from HFA?

MR. XI: Fire specific. The other part of it is the biasing. The other part of it is the biasing of those actions. They're all driven by compliance analysis that forces you to assume a room burnout condition which had you consider combination of events that may not actually occur. And quite frankly, the fact that Harris and their effort found instances where they found and many other plants have actions that are deleterious to plant safety overall, if they weren't really truly necessary is not a surprise to me, personally.

MEMBER STETKAR: Just to make sure I understand, Kiang, you said that you do include actions in the SSF in the Oconee fire PRA.

MR. XI: Right.

MEMBER STETKAR: But in the concept of the Reg. Guide, those are not quote unquote recovery actions. Is that correct?

MR. XI: That is correct.

MEMBER STETKAR: Okay, I just want to make sure I understood. Thanks.

CHAIR APOSTOLAKIS: So nobody so far has to use an HRA model to model those things.

MR. GOFORTH: We've only got two plants.

CHAIR APOSTOLAKIS: So there is hope.

(Laughter.)

MR. GOFORTH: I think there's something like 48 more stations to do this.

So anyway, the Reg. Guide 1.205 effects, I alluded to these on the previous slide. They're basically the same. Basically, there's a whole strong of dependent calculations that have to be revised.

Some lessons learned, and one of the reasons we're here is we really want to start locking down the guidance, especially for those that come after afterwards. We need to get this stuff locked down so we can move forward and start to get this 805 thing behind us.

Again, while conservative, the new fire PRAs are -- I put working as designed. That's

probably not the best choice of words, but they are working, they do need some work to come down to realistic which is my PRA folks tell me that's where the PRA is supposed to be. So I think we'll get there in the end. We've just got some work to get there.

What you have to be careful with though is if you're asked to combine the fire PRA with internal events right now because that can really skew and maybe mask something if you're not careful how you apply that together in there.

I think the time for maturing for the PRAs, I think they will come in to be extremely good tools over time as we learn more and put more into the methodologies and data that they use. As for using them on modifications, I mean that's really big and important to be able to apply risk because one of your factors in deciding to do a modification is not the whole thing, but it's a nice tool to have now.

Before under deterministic, you may put in a modification that really doesn't buy you anything, but you're spending a lot of money instead of putting it where the risk is.

MEMBER STETKAR: The reason I asked the original question a little bit earlier about the degree to which fire risk insights may have affected

the design of your what it is, the current system that you're installing --

MR. GOFORTH: The PSW.

MEMBER STETKAR: Yes, thanks. Is that although you might not necessarily a lot of confidence in the precision of fire risk results, it can also give you insights that might help in that design, routing a cable through location X rather than location Y, regardless of what the absolute values of those numbers are. I'm glad to hear you --

MR. GOFORTH: Numbers, they were given numbers, but they're good pointers, if you will, to insights.

As you heard at Oconee, we actually ended up with two PRA models and Unit 1 uses the Unit 2 model, but that was something that we did not anticipate originally. And it was a struggle to meet our LAR due date when we came back into that. On top of that we had originally were going to use a Cisco analysis, say Unit 1, Unit 2 cable basically routed the same. That went over about like a lead balloon.

We went back late and we went back and prepped all those cables, did exactly what needed to be done for those. So they're in the database the right way now.

And ideally, if you finish reconstitution, that's kind of what you have ready for the PRA guys as they start building it. Okay, here's what we're using and here's what's been put into the data base and it will probably cut down on the number of extra components you end up adding in later on. So it is a help.

Non-power operations. This ended up being -- started out a whole lot more complicated than we needed it. It took months for the industry and NRC to finally come to agreement inside a FAQ 40 how to handle this. And it is, as you heard earlier, kind of a qualitative type treatment to how we do this.

We also find out that the noncompartmentalized fires can present the pinch points as Jeff talked about earlier or choke points where you got cables for key safety functions. They're really in close proximity. So you want to control those combustibles or fire watches. You can use a lot of your programs you use now to ensure that those fires do not start. And that's the key to non-power places you want to ensure the fire doesn't start and that's what we're trying to do.

We are now piloting the incorporation of cool down activities into, and this probably should be

in quotes, a separate module in NPO, but treating it the same way we did FAQ 40 which does come up there. So we're looking to treat it kind of as a pinch point and that's what we were piloting with the NRC yesterday. So we're making progress on that.

So the 1.205 kind of -- it doesn't really address it specifically, but I put it under things that we're doing, it's adjustment at-power, non-power. So using pinch points, cool down, and non-power outage stuff is all treated as pinch points and the at-power is more like your old say shutdown analysis with PRA thrown in for good measure. But PRA doesn't really, they don't go out there that far for getting down into outages and non-power ops.

So we think Rev. 1 has got us started. I think we're off to getting a new process in, get it locked down, get it in NEI 402 and get it out to the non-pilots that this is one acceptable method to the NRC to do this.

License Amendment Request, as I stated, it was close to a thousand pages for both of our stations. We're trying to look -- we're piloting the LAR with the NRC, too, of what really needs to be in that LAR for them to make a judgment call. And so we're trying to work through that process.

As pilots, we're probably giving them tons more information than we're going to end up needing to the nonpilots, but it allows them to see what's there and make that determination.

I will say as we were doing the pilot LARs, you don't normally work on a LAR typically to due date like that. You typically get it all done and then you send it to the NRC. Well, we were working with due dates, so it was a compressed time period. We made it. We now have another one due in January. So, we'll handle that one too.

But there is a new license condition being added per Revision 1 to 1.205 and a good deal of our LAR sections have to be updated, based upon this new Reg. Guide. So it's going to get a pretty good rewrite.

MEMBER STETKAR: That's -- compared to Rev. 0 as a Reg. Guide or compared to the draft Rev. 1 --

MR. GOFORTH: It's draft.

MEMBER STETKAR: When you say most of the LAR sections will require revision to incorporate Reg. Guide 1.205 Rev. 1 changes, are those changes in 1.205 from let me call it the roughly August version of the draft Reg. Guide versus the October or the March

version, I guess, or is this Rev. 0 of 1.205.

MR. GOFORTH: No, this is from --

MEMBER STETKAR: The evolution for the last six or eight months?

MR. GOFORTH: Yes, and actually, we're using the September version. So -- you heard Steve Laur. We had a couple of industry meeting, public meetings over this.

MEMBER STETKAR: It's surprising that most -- that that substantial effect would be form the changes over the last few months.

MR. GOFORTH: If the changes weren't so beneficial, obviously, would not have worked with Oconee to spend all this money to revise this gigantic monster again. But the changes are really just beneficial, especially to the Duke plants that have standby shutdown facilities at all three stations. It just really is beneficial. And one of the things that we're after is we want to get things locked down so when the inspectors come in triennial, we want to get it so we're not arguing over we interpret that this is red and we say well, pink is close enough. We spend time arguing over stuff. So the more we can lock it down and get it written down in black and white, it's better for both sides, if you will.

One of the things we did have was a little bit of a rush review period for the LAR just because of our due date. We did get in a good review, but for the other two stations, I mean I would ordinarily figure in a 90-day review period for LAR, about a thousand pages. It's got to go through station review, station management review, Nuclear Safety Review Board review, and these guys don't like you handing them a thousand page document and they've got to give you an answer on it in two days. We're going to try to be a little more accommodating.

One of the things we would like to point out is it probably would have been real beneficial for the pilot plants to complete this pilot process before everybody else tacked on behind. I know that's water under the bridge, but for future pilot plant things that would be our input.

Configuration control, there is almost as much work to do post-LAR as well as getting the LAR ready, because you now have this new massive program you develop. Now you've got to maintain it. So now we have -- we do have a fleet modification review process that we put in place earlier because as I was alluding to earlier, we keep changing our plants. We need to make sure they're not only looking at the

current licensing basis, but they've got to look at NFPA 805 and not undo work that we've been doing. That will probably get revised again with some screening levels and stuff in it, but we had to get something in place starting out.

There's need for development of controls for calculations and LAR information that goes into fleet directives and engineering directives and all this thing, for instance, now if you have to change your nuclear safety capability assessment, well, somewhere you got to put a how to manual together. How do you do that?

I mean we've go ta team of people that have become experts on NFPA 805, if you will, but somewhere we've got to hand that off to the station. So we've got to make sure those directions are there.

The project process controls, another reason for locking down the guidance in that is that I couldn't tell you how many times we've taken the 805 project schedule and had to revise it. It's almost like it follows the work and that's now how you want to manage projects going forward. So you want to get them locked down so you can build a schedule you can adhere to and use going forward.

Another thing to keep in mind is a lot of

resources you need to do to the post-LAR stuff are committed to writing the LAR. So that's why you've got to make a clear distinction between the activities that are required to do the LAR and the activities you're going to try to do in the period between when the LAR is turned in and before you get your SAR and go live with the program.

I'll give you an example of the monitoring program. It's pretty big. NRC's thoughts originally were that would be completely turned in with the LAR. Both pilots came back and said we think that's a post-LAR activity because you have to have everything done before you can go and figure it out. So we've come to agreement on that for what we think it should be.

You're going to be changing the plant. You're going to be changing procedures, so you've got to have a screening process in place to do that. NEI 042 has some guidance where updated is needed and I talked about locking down the schedule.

Summary of the Oconee experience. This is the one you've been waiting for. The Oconee 0805 project is currently into its fourth year. We're about $18 million into it from that little $2 million we started with in two years. However, the pilot

plants, they're probably more expensive than most of the other plants end up being.

Our best estimate is you use three years and probably $6 to $10 million for subsequent transitions and that's not including any reconstitution going on.

MEMBER SIEBER: What about the stimulus program?

MR. GOFORTH: Yes, we need to apply for stimulus money. I didn't even think about that.

(Laughter.)

The government has got lots of money, so -- we're pushing, along with the NRC, we want to get stable guidance in place. The non-pilots are all pushing for that too. We've got to get this locked down, so we can get this project done. This project requires a tremendous amount of team work and communications, especially like a lot of other utilities now, contract out a lot of work and you've got to really get your plant people and your contractors all on the same page and able to communicate without any barriers.

You also have to remember that when you're using your plant people, their main job is to keep that turbine generator spinning, so if an outage comes

up or something, that's an impact on your schedule right there, that's their number one priority.

It is a very complicated process, requiring significant change management including training of people. As you've heard, just the PRA side from Harris how complicated this thing has turned into being. This is a slide, I've worked with the other two sites here for Duke. The different designs in the nuclear plants all offer some unique challenges to meet and NFPA-05. In America, we all have to custom design plants, so there will be some challenges there, but I do think 805 will everybody in the end.

And to top it all off, while we realize Reg. Guide 1.205 is not the perfect machine yet, like Jeff, I do think we're going to have to revise it when we finish this LAR for Oconee, but us and those that follow us all want to get this thing out there, get the rules out there to be locked down, so we can get this project over with and everybody be 805 plants.

I think that's my last slide.

CHAIR APOSTOLAKIS: Any questions from the members?

Gentlemen, this has been very informative. Thank you very much for coming down and talking to us.

MR. GOFORTH: We appreciate your time.

CHAIR APOSTOLAKIS: Mr. Bradley.

(Pause.)

MR. BRADLEY: Okay, good afternoon. Happy Friday the thirteenth. I have a fairly brief presentation, really regarding just one issue with 1.205 so I'll keep this short. And it also complements what both the pilots have said regarding the maturity and realism of fire PRA.

(Pause.)

As you know, Reg. Guide 1.205, in addition to laying out the regulatory process for 805 provides a number of specific method considerations for fire PRA. These are generally included as frequently asked question responses and also references to NUREG/CR-6850.

This is unprecedented for a regulatory application to have the PRA information put directly into the Reg. Guide. There may be reasons why it was appropriate here, given that this is a different kind of application. However, up to now, we've been able to rely on Reg. Guide 1200 as the basis for the technical adequacy of the PRA for the risk-informed applications we've pursued. So for this application, Reg. Guide 1200 is necessary, but not sufficient, so

you do need to go through the 1200 process, but on top of that the FAQs and the references to 6850 establish an additional regulatory expectation for certain PRA methods that you need to follow.

Donnie or others in the presentation this morning alluded to the -- I think it was Steve Laur that said the majority of the stakeholder comments have been accommodated. Well, one of the comments that we had made on 1.205 that was not accommodated was we believe that the PRA methods didn't belong in 1.205. It's not clear that PRA methods are application specific and we believe Reg. Guide 1200, Rev. 2 was sufficient to address PRA technical adequacy. So that was one, in my opinion, fairly important comment that was not incorporated into the Reg. Guide.

We talked about some of these PRA issues before. It's not my intent to go through the issues, but rather to just discuss what could be done with the Reg. Guide to better acknowledge the fact that we're still in the evolutionary stage for fire PRA.

There was a Commission briefing last week and NRC management at the briefing basically stated fire PRA is closed, the issues are closed. We're done and this presentation is a bit of a reaction to what I

heard there.

As has been discussed today, there is still a lot of work that needs to be done on fire PRA. Certainly, it's not correct to say these issues are closed. I know stability and clarity is a good thing, but it's also important to make the right decisions and to make sure that the PRAs we're using are giving us the right information. And it's not clear that while this may establish clarity, it may not establish the correct technical process to get to the right decisions.

The reason we say that is as we've discussed before, is that the PRAs are intended to be realistic. The NRC PRA policy statement discusses that and these methods still have a long way to go before they provide results that comport with the operating experience we have. And I have a little example of that in a minute.

There's a lot of work that remains to address not only the set of FAQs that were deemed closed, which were in fact not closed, but also a number of additional PRA issues that have not even been brought to the process yet.

Basically, my bottom line on this presentation is the Reg. Guide is really silent on

this. It doesn't discuss at all the fact that these are relatively immature methods that are subject to change refinement. The insights and the results and the decisions that come out of these PRAs could change as you get better information.

This is just a little example of the current state of modeling that we're dealing with and this is similar to something that you've seen before from others, I think Kim Canavan and the briefing went over this. This is an illustration of the -- of what happens when the relatively small conservatisms and the method are compound. And if you look at - -this is low voltage electrical cabinet fires and this is along the lines of what Dave Miskiewicz discussed earlier and basically you're looking at a function of likelihood and severity. So on the likelihood side, we are being biased by early events, pre-Appendix R, going back into the late '60s on ignition frequency and also inclusion of fires where we really don't have good data. It's just assumed that 30 percent of those were significant fires. So both of those factors result in probably a highly biased ignition frequency.

On the severity, there is a lot of test data out there. There's a 1987 NUREG that ostensibly discusses the tests that were done. There were a lot

of factors that lead to the heat release rates that we're now expected to consider. Among those things were that a lot of the tests were done with unqualified cable which leads to a much greater fire propagation and a greater heat release rate, but that unqualified cable is used to anchor the distribution you have to assume for any cabinet and 80 percent of the cables we have are qualified, but we're still having to anchor the distribution with the nonqualified value which is much, much higher.

Also, as was discussed earlier, these fire tests, basically if you read the test report, they couldn't get the cabinets to catch fire, so accelerants were used basically transient combustibles were put directly into the cabinet and this included, I believe it was something like a half a gallon or on the order of that or maybe less of acetone wadded up paper, bunsen burners and in addition to that, the cable bundles were loosened in some of these tests. The cabinet doors were left open. All these things were done to probably provide a bounding estimate of the peak heat release rate, but the results in the rapid 12-minute ramp up to a 211 kilowatt fire that you have to assume for every low-voltage electrical cabinet. And that's not something you can get out of

with additional work. Basically, the method has you make that assumption.

So if you look at the result of the compounding of all these factors, we have about 3,000 reactor years in the U.S. right now. We look back at the data. There have been 13 events in low-voltage electrical cabinets. These are non-HEAFs. These are just fires. Thirteen events were the fire ever got outside the cabinet. But based on the prediction of using the 6850 methods, we should have seen 130 of these fires with a heat-release rate of 211 kilowatts which is even more severe than what's been noted in actual experience.

MEMBER STETKAR: Biff, before you go to the next slide, we've heard now two presentations regarding the conservatism in the fire-initiating event frequencies and the combination of the frequency and severity.

If I read back through NUREG 6850, the fire frequencies were derived from the EPRI fire events database. That fire events database was ostensibly derived from a complete evaluation of operating experience that was subject to substantial screening to remove all insignificant fire events so that only so-called significant fire events and

indeterminant significance, they were rated as .5. So you got a half of an event if you couldn't determine the significance.

Now if I read 6850, the folks in the fire end of the 6850 process were cognizant of that screening and therefore when they evaluated their heat-release rate distributions did not allow very low heat release rates because ostensibly those fires with very low heat release rates had already been screened out. They weren't counted in the frequency. How do you respond to that? I'm not arguing necessarily that the currently predicted heat-release rates are not conservative. I actually believe the heat-release rates may be conservative, but indeed, some sense of that integration, at least the way I read it was factored in.

In other words, if the EPRI fire events database had not screened out a relatively large number of insignificant fires, there may have been a broader distribution of heat-release rates extending to lower heat-release rates.

MR. BRADLEY: Kiang got up, so maybe he has --

MR. XI: This is Kiang Xi. I think the direction you're headed are fair questions. And I

think the direction you're heading is important. But I think it's also important to connect together more of the elements of the 6850 methodology together to get to the end treatment of the phenomena. So what you're saying is correct, that we've heard that message before, but if we connect together other parts of it, the rules say things like you must postulate the fire one foot down from the top of the cabinet. You must assume a growth rate in 12 minutes. You must assume that any target that's within a certain amount of temperature is ignited. The rest of the dots perhaps connect together and may be an alternate way to perhaps look at this is to take the experience date and the observation. If you connect it together, and even include the treatment for suppression, you should still see by this methodology that in the amount of experience data we collected, we should have had some non-insignificant electrical cabinet fire events that by the time the fire brigade arrived, the overhead cable trays were already involved. And we have zero.

MEMBER STETKAR: I agree with that. I'm not trying to parse the analysis into the bits and pieces of frequency versus severity versus propagate. And I personally agree with you that a more integrated perspective, looking at the actual

operating experience is necessary.

On the other hand, I also am sensitive to the arguments that says well, if you only look at the frequency, we've only had this many events, but those have been screened, and if we apply these other disjoint, heat release rates to that frequency, we're led to excessively conservative results. Because indeed, if there was a broader distribution of heat release rates, that broader distribution extending to a lower heat-release rate, the probabilities of lower heat release rates would indeed apply to the whole population of fire events that we're counting.

MR. XI: From my perspective, I think at least in my prior engagements and dialogue on this, it's been difficult to get the right collection of people that understand the integration of all the elements through the entire PRA, that the arguments tended to center on the validity of a single compartment of the analysis and when argued in that context is very difficult to find fault in any single compartment with a little c, not that capital C.

MR. BRADLEY: Yes, this wasn't intended to be critical of what was done, but just to demonstrate the amount of work that remains to be done to get to a more realistic answer. I'm sure it was well intended,

but we are now dealing with the results of a lot of PRAs that have been developed on the basis of this method and these are the results we're seeing versus what experience would tell us.

CHAIR APOSTOLAKIS: The big difference is the results of the five PRA are usually regulatory affairs, so now people pay attention.

MR. BRADLEY: There's truth to that. I mean --

CHAIR APOSTOLAKIS: That's what's driving.

MR. BRADLEY: We've been saturated working on internal events for the last 15 years because that was the predominant model we were using in regulatory space and now we are moving into this and --

CHAIR APOSTOLAKIS: It will take some time.

MR. BRADLEY: And I think there's work that can be done and I wanted to go to the next slide.

This shows -- this is a slide that EPRI used at the Commission briefing last week that basically shows all the areas of work that are currently underway or planned by the industry and some of this in conjunction with the staff through the EPRI MOU.

The bottom line on this is the things you

see in red here are the issues that have been declared closed or captured into 1.205, but they are still work that we are doing to further refine those methods. And just to disabuse the notion that we're done with that, it may be clear, but it's not right yet, and we have work to do to get there.

And then the rest of these things that are listed here are things that haven't even really found their way into the FAQ process, but are very important to the ultimate fire PRA and are all being put into this plan that we're working on and this is several million dollars worth of work and it's several years worth of work that we have laid out.

Obviously, the concerns are that where 805 is a schedule-driven animal and the schedule for 805 doesn't match the schedule we have to do the necessary improvements to get more realism in PRA. I think the pilot plants indicated that they thought they got insights out of the fire PRAs and I believe that's true. At the insight level, we can get some insights.

MEMBER SHACK: They supported issuing the Reg. Guide.

MR. BRADLEY: I support issuing it with the change I'm suggesting here. The concern is that the Reg. Guide, it's not really a -- this whole

process isn't really based on insights. It's based on numbers. And we have to be careful. We don't really know that all of these conservatisms are evenly distributed throughout the model. We don't necessarily know that what these models are telling you are the correct things to be doing. I think we're coming close. We're in the ballpark, but there's still more refinement that's needed to really make the right decisions.

And was as alluded to earlier, especially now that we have internal events as a fairly mature model and now that this is starting to come into the regulatory space, we've got to be very careful balancing the insights from those two and the numbers from those two models. And there was some statements made at last week's Commission briefing to the effect that these fire PRAs were good to go for other applications and I really am concerned to hear that. I think any application that involves comparison to internal events, we're not there yet. And we have to be careful how we depict these fire PRAs that we're developing for 805, especially when it comes to characterizing the plant risk which is what a PRA is really supposed to be about. It's a best estimate of the real risk of the plant.

Well, I think internal events were fairly close. This, in my mind, is not a best estimate of the real risk of the plant. So it's wrong to represent this number added to your internal events number as the risk of the plant.

MEMBER SIEBER: Let me ask you this question. The perceived risk comes out of these kinds of analyses, actually do have some influence on the way the plant is managed and in particular, the way operator actions are managed.

If you have a disparity in the risk estimate for various functions within the plant and the types of equipment, would that lead to the wrong operator actions or perhaps wrong or lack of priority or incorrect priority and plant modifications or procedure arrangements? Could we actually be getting less safe in this process?

MR. BRADLEY: I think if you just blindly use these numbers without due consideration of the potential biases and the differences in the way this study is done versus internal events that could happen, an area, for instance, like risk management online risk, there's work under way to add fire into that consideration. And we have to be very careful how we do that because this could dwarf out all your

internal events risk management actions and lead you to believe all your risk management should be directed at fire.

I don't think the plants are going to blindly just look at numbers. I mean that's the danger of looking at numbers without having a better understanding of where they came from. I think that's what I want to avoid, you know. We don't want to set up a system where sort of incentivizing doing that kind of thing that could lead to the --

MEMBER SIEBER: But there's a hundred plants out there. All you need is a few to get the wrong perception of what this all means. It could create a less safe situation than other facilities that might have a better perspective.

MEMBER STETKAR: But on the other hand, one thing I heard from both Harris and Oconee or I think I heard it anyway was that when they looked at the risk assessment at an integrated assessment of the risk, they concluded that some of the operator recovery actions that they included for compliance with the deterministic Appendix R criteria indeed were detrimental to overall plant risk and have, I believe, either changed them or removed them from their procedures.

So there's kind of a counter example that says this integrated perspective -- there's a danger of focusing too much on only fire, but on the other hand, there's a benefit of trying to integrate the fire with the rest of the plant because --

MR. BRADLEY: I don't disagree with that. I mean Appendix R is even a grosser way to -- we're getting there, but I mean Appendix R -- I just wanted to bring that up in the context because to get away from the kind of emphasis that we might be focusing.

A big part of my concern is really outside of 805 because I know the Agency uses risk in all kinds of things now. Reactor oversight process, maintenance rule. We're using this everywhere and I'm just -- there's nothing in this Reg. Guide that says be careful or consider the fact that these models aren't comparable to the other models and especially since we have FAQs in there that basically establish method expectations that drive you to conservative results.

MEMBER SIEBER: Let me -- before you -- my question has no relationship to your slides.

MR. BRADLEY: That's all right.

MEMBER SIEBER: I need to really ask this question. I followed the deterministic part of the

fire protection rules, Reg. Guide 1.189 and I'm here to see what happens to the other side. And if I look at 1.189, there is an area in the important-to-safety category where risk information can be used.

MR. BRADLEY: Yes.

MEMBER SIEBER: Now in 1.205, you can reduce the scope of the risk information and focus on specific areas where you don't need a full fire PRA, but you can apply PRA methods in accordance with the NEI document and so forth to specific issues. My question is is that overlap between these two Reg. Guides, are they -- is that overlap area consistent between the Reg. Guides or not? And I think you know both sides pretty well.

MR. BRADLEY: Well, I wish I -- I don't know 1.189 as well as I should. I'm more familiar with 1.205. My sense is 1.189 drives you more to spend money on mods or just remove the circuit.

MEMBER SIEBER: Yes.

MR. BRADLEY: Whereas 1.205, you spend a lot of money on analysis and churning and then --

MEMBER SIEBER: Well, after listening to Oconee, I think you spend the money. It's not clear to me what you spend it on.

MR. BRADLEY: I can't really speak to the

equivalence -- you're right. For the off the primary shutdown path, you're allowed in 1.189 to use some risk methods. I'm not familiar with exactly what those are.

MEMBER SIEBER: Let me ask Sunil the same question, because you're involved in both sides of this pretty much equally. Is 1.189 in the areas where there's overlap consistent with 1.205?

MR. WEERAKKODY: At a very high level. I'm going to ask Harry Barrett to elaborate on any details because he's the staff member who has been working on both of those efforts. In areas where they need to maintain consistency, the overlaps are consistent. What 1.205 allows you to do, which 1.189 does not is bring PRA into some of the areas such as human reliability analysis as opposed to setting upper bounds.

MEMBER SIEBER: And the operator get out there and do something in the time allowed.

MR. WEERAKKODY: Harry said I answered the question correctly, so it must be right.

MEMBER STETKAR: The difference that I see and I've sat in on both sides is the difference that I brought up this morning in terms of technical issues that 1.189 in the area of important to safety, not

required for safety, whatever the jargon is.

MEMBER SIEBER: Safe shutdown.

MEMBER STETKAR: Safe shutdown, the generic orange versus green.

MEMBER SIEBER: Right.

MEMBER STETKAR: In the orange area, you're still required to use the methods for multiple spurious actuation according to NEI 00-01, Revision 2. In Reg. Guide 1.205, you're not required to use those methods for multiple spurious actuation. Now the requirements under NEI 00-01, Rev. 2 are more restrictive or more conservative, if you want to use that method, than NEI 00-01, in terms of number of coincident spurious operations and the treatment of intercable hot shorts versus intractable hot shorts.

So there seems to be a philosophical difference wherein in 1.189 if I'm going to use a risk -- I have to be careful in terms of the terminology, a risk-informed approach, if I want to use that for the orange circuits, you're held to the standard of NEI 00-01, Rev. 2 for the scope of multiple spurious operations. Whereas in the risk-informed approach, you're held to a less restrictive standard. That's my basic interpretation. And I see Harry shaking his head, so if you can convince me that that isn't the

case, I"d be really happy.

MR. BARRETT: Harry Barrett, NRR, Fire Protection. The way the 805 plants have been implementing this has been in accordance with the PRA standard which requires you to identify as many multiple spurious combinations as are risk significant. In other words, you don't stop at two, you don't stop at three. What was done in 1.189 is actually a simplification or a lessening of the requirements because they wanted us to endorse the idea that with relays that may drop back out again, the fact that they will be coincident at the same time is really not that highly improbable.

We really didn't want to accept that because that's a probability argument in a deterministic rule, but we looked at it, but we said you know, they're right. There is probably some limit to the number that they really need to look at. Whereas, a PRA standard doesn't give you that option. You really have to look at the PRA, the probability of the actuation and the combinations and put them in the model and let the model solve it.

So the intent of 805 is you identify all these multiple spurious combinations and what happens to the pilots and the early plants that have done

this, they've done an expert panel where they have identified all of the potential ways that they could defeat safe shutdown, whatever the numbers are. Put them in the model, let the model end up solving it. Okay?

MEMBER SIEBER: So this addresses the AC clearance time?

MR. BARRETT: Yes.

MEMBER SIEBER: As opposed to the DC --

MR. BARRETT: Yes. DC is not in there yet, but they're still doing their research on that, but 1.189 right now addresses that.

MEMBER SIEBER: There were more DC cables at the conclusion because there was only one that cleared of all the tests that were done.

MR. BARRETT: Right. Of all the different testing, there was only a limited number of -- the durations were limited. So the probability you're going to have two relays come in at the same time is pretty low because they're probably going to blow, go to ground, blow the fuse, drop out.

MEMBER STETKAR: That is in 1.189.

MR. BARRETT: Yes.

MEMBER STETKAR: Twenty minutes. I recognize what you said about the fact that

pragmatically both of the two pilot plants --

MR. BARRETT: The standard. I'm pointing to the ANS/ASME combined standard. It basically says you have to identify the combinations that the fire damage can give you an initiating event and there's a certain number you have to assume and you have to look at the things that can damage mitigating systems and there's a certain number you have to assume depending on capability category.

MEMBER STETKAR: Does Reg. Guide 1.205 reference that ASME/ANS combined standard?

MR. BARRETT: Yes, through Reg. Guide 1.200.

MEMBER SIEBER: Let me ask one other question. You can probably answer in a word or two. When you do the 1.205 analysis including the fire analysis and the risk analysis, do you believe that you will discover phenomena or risk-significant situations that 1.189 does not now contemplate?

MR. BARRETT: I think that's true, yes. Because you're using a PRA model and you're actually looking at system interactions that you're probably not going to consider. You're going to find things you didn't even know about. Yes.

MEMBER SIEBER: And so what do you do

then?

MR. BARRETT: Depending upon the risk, you fix them if they're high enough.

MEMBER STETKAR: Or you fall back to 1.189 and say you're deterministic.

CHAIR APOSTOLAKIS: Can we let Biff finish up?

MEMBER SIEBER: I'm sorry.

MR. BRADLEY: That's okay. I'm nearly done. Specifically what we were looking for, or our proposed improvement to Reg. Guide 1205 would be to add some verbiage, somewhere in the Reg. Guide that just identifies the need, the fact that these methods are improving the insights are getting better, the realism has yet to be attained, and that you need to be careful using these models, even within 805. This isn't really outside of 805. But we talked about low voltage electrical cabinets. You might end up thinking you need to do a bunch of modifications relative to those when in fact you have other contributors that are really more important, but are being masked by the exaggeration of the low-voltage electrical cabinets.

So none of those cautions exist in the Reg. Guide. There's no discussion of that. It's

treated just like any other PRA, like your internal events model. And what really got me going on this was going to the Commission briefing last week and seeing this freshened by staff that yes, that's the way we think. And I think that's a concern and we are doing, we're trying to be proactive. I mean NRC is doing a lot of fire research. The industry is going far with this, but it's going to take a little time.

And the other thing that concerns me is the license condition for the post-mods to the plant. It's quite likely that you're going to find out the mod you proposed might not be the right mods or may have been based on some incorrect information. There needs to be some way to come back, short of another thousand-page LAR. It shouldn't be incredibly difficult to revise that license condition in a manner that accommodates the better insight or the better model that you now have.

I'm very unclear, this putting the fire PRA in the licensing space in 1.205, it's not clear to me how we deal with future model improvements. The model gets better. I don't know if you're bound -- somehow the LAR somehow binds that model to your licensing basis. That part to me is not well understood. So if you have a better model a year from

now, I don't know what that means with respect to the model you put in your LAR. But this is a real issue. These models are really going to change and we need to be ready for this and not just be blind to it in the way the whole process is set up.

So in conclusion, this is a schedule-driven effort. NRC has redefined compliance. So we're out of compliance, so we have enforcement discretion, so we've got to get back in compliance. And there's a schedule for all that that doesn't really take into account all the model improvements that need to be made.

So just to repeat myself, I think there needs to be some acknowledgment of this situation in the Reg. Guide. I've been worried about the lack of discussion of realism and throughout this process. It seems like the concept of having a realistic assessment of risk and what's in the PRA policy statement is not really being followed here. We're being told in the interest of clarify and stability just to go use the conservative method, but there's nothing in there that says this isn't really the risk of a plant. This is a conservative method in place for clarity. None of that is in the Reg. Guide. It's just treated like any other PRA.

So I still would like to believe we -- I understand this is a difficult problem. We can't snap our fingers and have a realistic PRA. I think not having those FAQs in there and just being able to rely on 1.200, Rev. 2 would actually be an improvement because it would allow 1.200, Rev. 2 to be used the way it was intended to be used.

Putting the FAQs, that put methods into the LAR complicates that situation and I never really anticipated when we were developing 1.200, Rev. 2 that there were other things that would be put on top of that. I always thought that was supposed to be sufficient. So I'd like to think we still are focused on realism as the goal here and that's my final point.

MEMBER STETKAR: Biff, how do you respond to the question that says well, transition to NFPA 805 is a voluntary decision made each licensee on a plant-specific basis, for whatever reason they choose. And the two pilot plants who have volunteered to transition both endorse issuance of 1.205, Rev. 1 as it stands.

If people have real heartaches with the whole process, they can choose not to adopt.

MR. BRADLEY: Yes, they can. And I think you'll find that 51 or however many plants signed up

for 805, we've learned a lot since that date. I'm not sure if you ask those 51 plants to make that decision in light of everything we know today, it would be quote compliance issues involved. There's enforcement discretion involved. It's a very difficult situation. The licensees, especially the pilots need to be able to say this is a success. I think it has been a success for them, but not being a licensee, I think there may be some reconsideration by those plants that thought they wanted to go to 805. The alternate method, the 1.189 method may actually -- it depends on whether you want to spend your money on analysis or on just fixing the problem. And this came up a little bit in the briefing last week with Danny Pace. Just go in there and move the circuits and you're done with it.

You can chew up a lot of your resources here on dealing with these conservatisms and then having to take them out --

MEMBER STETKAR: The three quarters of a billion dollars is a lot of money compared to even $8 or $10 million.

MR. BRADLEY: That's a unique circumstance. Most of that is not driven by 805.

CHAIR APOSTOLAKIS: Can we ask the staff

whether they agree or disagree with the bullets that Biff has put up there?

MR. GALLUCCI: This is Ray Gallucci. I'm not speaking for the staff, but for myself. I'd just like to make a few points here.

We've heard a lot, not just today, but over the past, it's been going on for about a year and a half about the immaturity and conservatism of fire PRA. I want to make a few points.

Dr. Apostolakis knows that fire risks were first estimated back in 1975 with -- as an add-on to Appendix 11 of WASH-1400. He pursued studies at UCLA with several doctoral students on fire-risk methods. I myself did the same at RPI on fire PRA, fire-risk methods in the late '70s. So fire PRA is about as old as internal events PRA.

The second point. There has never been core damage in the world due to a fire. There's been a lot of close calls. Browns Ferry was one. There's been five or six overseas, but it has never happened. So that's an important point to keep in mind.

Third, I did a study a few years ago, just using a pure statistical point estimate on what you would get if you calculated the core damage due to fire. For the U.S., given that you've never had a

fire, but that Research did several studies with ASP estimating the -- how close you came to core damage with Browns Ferry, the number I came up with for the 3,000 reactor years of operation in the United States was something about $7E^{-5}$ per reactor year for what you would get as a point estimate for core damage due to fire.

And the fourth point as you saw today that a couple of the estimates that are coming out of the pilots are around $3E^{-5}$. So it seems to me with all the flaws that you've been hearing about that it looks like the 6850 methods are coming up with point estimates that are not inconsistent with what you might get from just looking at historical evidence.

So I just want to make those four points because I've been hearing a lot about immaturity and conservatism and I just want to leave you with the idea that not everyone agrees with that.

MR. BRADLEY: Ray, just a question for you. I mean outside of core damage, if you look down at say large fires, fires that challenge safe shutdown, fires that have burned up cable trays, have you made those comparisons? Because -- we're not -- I think it's easier to look down a level because there's more data and that's where we've been trying to look

at the experience data. And that's where we're seeing these methods, overpredicting the occurrence of these kind of challenging fires.

I can't really speak to what you did on core damage. I would note that the pilots' CDFs reflect post modification based on everything they've --

MR. GALLUCCI: Well, they would have been about 4 or $5E^{-5}$ prior to the mods, because you saw the deltas that were there.

MR. BRADLEY: Rather than concentrating on core damage, how do you speak to the apparent disparity in the number of large or challenging fires that these models were predicting?

MR. GALLUCCI: I haven't done that analysis, but I do speak specifically to core damage because we're dealing with fire PRA. PRA is a took that was devised to estimate core damage probabilities, core damage frequencies for the purposes of demonstrating whether or not various technologies were safe. And to me, that's the ultimate line.

The bottom line of all this that comes out of Reg. Guide 1.174, that comes out the pilot studies, that's coming out of 805 is at least as far as the

risk is concerned is what is the core damage? So if you're getting higher estimates than you think you should be getting for the individual fire events, I'm not sure what the cause of that is. But I hear how all the conservatisms compound to give unreasonably conservative estimates of fire core damage frequency, yet, I see the numbers that are coming out to be on the same order of magnitude of what I would expect historically based on evidence with 3,000 reactor years. World-wide, if you go to the 11,000 or 12,000 reactor years, I did a similar estimate, I get about $9E^{-5}$.

Like I said, I'm not speaking for the staff or anybody, just myself, but I just want to let people know that not everyone buys into this immaturity and over conservatism of fire PRA.

CHAIR APOSTOLAKIS: Thank you, Ray. Let me come back to my question.

MR. WEERAKKODY: George, what I would like to do is briefly go through a number of points. We can address each one of them, but if you, for example, he talked about the ignition frequencies, the 6850, there are so many like the 1.200 process, I don't want to turn this into --

CHAIR APOSTOLAKIS: The last -- these are

not too many. He says Reg. Guide should acknowledge. It has three sub-bullets there. Do you think that the Reg. Guide should acknowledge the current immature state of the PRA?

MR. LAUR: This is Steve Laur. No, I don't think the Reg. Guide, not Reg. Guide 1.205 in my opinion doesn't need to acknowledge or not acknowledge. It's actually, and I'm a little confused by what Biff has said about the methods because there was a comment on the methods from the stakeholders and we did address it to very heavily rely on 1.200. We don't get in Reg. Guide 1.205 anything about, for example, I think we mentioned 6850 saying there's one method of -- that you might use. Okay?

Now if you look at the standard license condition for self approval, we say methods have to have a certain pedigree, but it's not -- it wouldn't change if all o fa sudden ten years later you look back and you have a very refined PRA, you wouldn't be stuck with methods that were approved ten years ago. It doesn't say anything like that.

I really think it's an interesting topic, but it seems to be off point of what we're trying to get out of the ACRS which is this particular Reg. Guide. It's a broader topic and a little bit disjoint

from whether or not Reg. Guide 1.205, Revision 1 can go forward or should go forward at this time.

MR. HARRISON: If I can add, this is Donnie Harrison. I think there's also two other points her.e One is the PRA policy statement actually says in accordance with the state of art, so you should be consistent with that. It doesn't mean if NUREG CR 6850 was a consensus document that was to represent the state-of-the-art as it was just four years ago. It's hard to imagine now to be criticizing that methodology. It's only four years old.

Of course, you can always refine and improve it, but that's the state-of-the-art at that time.

MR. BRADLEY: It's based on the NUREG on the electrical cabinets since 1987.

MR. HARRISON: I understand, but that was what was incorporated as a consensus decision.

MEMBER SHACK: Just to give you guys credit, for your June version to your current version you did add the sentence that said 6850 could give you conservative results and they could do other things. I'm interested in this FAQ, that there's some additional guidance out there that's sort of back door, that's beyond the Reg. Guide, but seems to be

driving things here.

MR. WEERAKKODY: This is Sunil Weerakkody. I'd like to give a little bit of a long answer to that. We established the frequently asked question process several years ago, based on requests made by Nuclear Energy Institute. And the request was justified. We understood when we were doing the pilots that there will be issues that would be -- that has to be addressed in the more real time basis, as opposed to waiting on the pilot. And the substance of these questions related to PRA methods. And our -- and the reason we used FAQs for some of those PRA questions as we'll ask other non-PRA stuff, was to give the pilots and the non-pilots the stuff they needed to continue to move forward.

It by no means undermines the 1.200 process. In fact, we specifically in Reg. Guide 1.205 mention 1.200 as the acceptable method of maintaining PRA quality. We do -- one last point and then I'll stop, what we do is though when there is some very novel method out there, such as if a licensee installing superior detection system, which has never been analyzing the PRA world, staff would like to get some pre-engagement so that our inspectors don't go after the fact and write violations on methods. So

that's the limit to it.

MR. BRADLEY: I think the FAQs go beyond that. They do address base model considerations. They require you to do a sensitivity in the application, based on old data. They require you to assume 211 kilowatt heat-release rates. Between 6850 and the FAQ, I appreciate that there's recognition of 1.200, Rev. 2. A lot of this proof is going to be in the pudding because both of the pilots actually took a number of changes to either 6850 or the FAQ approach and how that gets approved and reviewed will inform this.

But I do think that this is different from any other application I've seen and that you have specific methods put in a Reg. Guide. And certainly the way it was expressed at the Commission briefing last weekend was this was to provide clarity, stability, and that these issues were done. And that's my concern.

MR. LAUR: George, if I could -- I don't want to belabor this too much, but just to clarify. The FAQ process which was well underway before I got involved in this, was originally pretty much focused on these issues that arise that would need to influence or provide new guidance in NEI 04-02 which

is Reg. Guide is supposed to endorse.

There is a subset, and this came up relatively recently in the process where certain PRA method issues arose and the management direction was let's use the FAQ process, but these FAQs, the results of these are supposed to go toward a revision of NUREG 68 CR 6850, EPRI whatever it is, long number.

And so once again, it may not be the best process, but these particular FAQs, any of the FAQs, until they're incorporated into a Reg. Guide, those that are supposed to be, represent Interim Staff Guidance. They are not official positions. The ones that are slated to go in to NUREG 6850 have even less standing in terms of the hierarchy of things because that is a reference document. A NUREG, not a Reg. Guide.

So once again, I'm not aware of any place and I could find some place, but I don't think there's any place in Reg. Guide 1205, Rev. 1 which is what we're here to talk about, that says here's a FAQ on incipient detection. We're very -- just like we try to refer to Reg. Guide 1.174 maybe a little bit too tersely, we did the same thing with 1.200. We're saying the staff, the authority having jurisdiction has already stated positions out there. And we're not

intending to modify those in this Reg. Guide.

MR. BRADLEY: So the method FAQs are no longer in place, is that what you're saying?

MR. LAUR: No. I'm saying they have nothing to do with this Reg. Guide.

MR. BRADLEY: Where are they captured?

MR. LAUR: They're staff guidance that is eventually going to be incorporated into NUREG CR 6850.

CHAIR APOSTOLAKIS: Yes. We need to wrap this up. You guys do not agree, unfortunately.

Does the staff know what you will present at the Full Committee meeting? Do you have any questions or is it clear what you're going to do?

MR. WEERAKKODY: I think we are clear. As was said at the outset, George, the staff, and as you heard from the two pilots, we -- and I know there's a number of nonpilots who are not there, we really seek to establish a benchmark to move forward.

Rev. 1, as both pilots said, gives that clarity and stability so we really want to move forward and present this guide to the Full Committee and seek their endorsement and issue this guide. Some of the other imperfections that you alluded to --

CHAIR APOSTOLAKIS: The issues of

interest, I think Steve had a nice slide identifying the changes. If you can focus on that kind of approach and tell the Committee here are the issues that were raised, here is how we resolve them. Thank you very much.

Okay?

MR. WEERAKKODY: We'll do that.

CHAIR APOSTOLAKIS: And you will take under advisement my suggestion for putting a sentence --

MR. WEERAKKODY: Yes, we will work with the ACRS staff and --

CHAIR APOSTOLAKIS: Good. I would like the members to give me some advice, oh, I'm sorry, Jack?

MEMBER SIEBER: I'll give you my advice, too.

CHAIR APOSTOLAKIS: Give me your advice.

(Laughter.)

MEMBER SIEBER: There was a couple of discussions this morning where the staff said they would make some minor changes.

CHAIR APOSTOLAKIS: Yes.

MEMBER SIEBER: I think they should look at the transcript, see where that is, and make them so

that in December we have that. Otherwise, after 35 years since Browns Ferry, I'm glad we're making progress.

CHAIR APOSTOLAKIS: That's your summary?

(Laughter.)

CHAIR APOSTOLAKIS: Go ahead and write a letter.

John?

MEMBER STETKAR: I don't think I have many things to say in summary. I think that Rev. 1, as it stands now, has clarified a lot of the issues that we had or I had anyway from the previous revision.

I personally still have some questions about treatment of recovery actions, but those are more of a generic nature, I guess. As long as I'm convinced that in a practical application all human actions are eventually quantified in that post-transition baseline risk model, I'm pretty happy with that.

The guidance about treatment of hot shorts, if multiple spurious actuation, if indeed, the convoluted logic through all of the requirements in practice will invoke that type of treatment that was done in both the pilot applications, I'll acquiesce there also.

CHAIR APOSTOLAKIS: So -- and I'm asking Jack as well, if you were a benign dictator would you issue this? Jack says yes.

John?

MEMBER STETKAR: Yes.

CHAIR APOSTOLAKIS: Yes. William?

MEMBER SHACK: I would issue it.

CHAIR APOSTOLAKIS: You would do what?

MEMBER SHACK: I would issue it. It seems to me that they've addressed a great many questions. I think that the guidance is there, based on the pilots that it's important to get this out.

Many of the things that Biff was talking about I think are decision making things that are really 1.174 kind of issues. We're going to realize that there are uncertainties and difficulties with these. When you're using the fire PRA results you'll have to consider those things in the decision making process, but the point of 1.205 is to give you guidance to implement NFPA 805 and I think it does that.

CHAIR APOSTOLAKIS: Yes. Mike?

MEMBER RYAN: I vote with my colleagues.

CHAIR APOSTOLAKIS: You vote with your colleagues.

MEMBER RYAN: I think a lot of the issues are clarified from the discussion today. It might be helpful to issue something in the guide that roadmaps a little bit of the confusion you're trying to resolve.

A couple of flow charts that show how things work with all the different regulations, all the different codes and guidance might be helpful.

CHAIR APOSTOLAKIS: Now, I don't want Sunil to feel so happy, so I will not say I would issue or not. You heard the other members. I'm waiting for the paragraphs with the adjustments.

(Laughter.)

If that is not blackmail, I don't know what is.

(Laughter.)

But this was very, very informative, very useful discussions and presentations. We appreciate the presentation from the staff, and also our guests from the industry, because this really, I mean presentations of this kind are what gives the realism to our thought processes here, so we appreciate your coming here. Thank you very much. And we, of course, appreciate Biff's presence, as usual, always stirring things up.

(Laughter.)

And with that said, thank you all, the meeting is adjourned.

(Whereupon, the above-entitled matter went off the record at 2:32 p.m.)

Duke Energy
Oconee Nuclear Station

Oconee NFPA 805 Experience

Rich Freudenberger
Safety Assurance Manager

David Goforth
NFPA 805 Technical Manager

Background
NFPA 805 Relation to Tornado/HELB Projects

- ONS Refurbishment
  - Emergency Core Cooling Systems / Emergency Operating Procedure Improvements
    - High Pressure Injection Pump Recirculation Flow
    - Low Pressure Injection cross-tie / flow restrictors
    - Reactor Building Spray
  - Miscellaneous Upgrades
    - Main Turbine Rotors
    - Electrical Penetrations
    - 600 V Electrical Distribution
    - Reactor Building Sump Strainers (~100 ft^2 to ~5000 ft^2)
  - Digital Upgrades
    - Integrated Control System (1998)
    - Water Treatment System (2000)
    - Automatic Feedwater Isolation (2002)
    - Keowee Hydroelectric Station's Exciter and Governor (2004)
    - Main Turbine Control System (2004)
    - Control Rod Drive System (2008)
    - Turbine Supervisory Instrumentation (2008)
    - Main Generator Voltage Regulator (2008)
    - Main Feedwater Pump Control System (planned 2010)
    - Reactor Protection and Engineered Safeguards Systems (planned 2011)
- Steam Generators / Rx Vessel Heads (2002 – 2004)

Background
NFPA 805 Relation to Tornado/HELB Projects

- Risk Reduction / Old Licensing Basis Issues
  - SSF (Standby Shutdown Facility) 1985
    - Maintains Units in Mode 3 from outside the Main Control Rooms
      - Damage Control Measures used to cooldown and restore long term DHR
    - Designed for Appendix R, Turbine Building Flood (internal), and Sabotage.
    - Later credited for Station Blackout and Tornado
    - Single train, with support system interdependencies
    - Most Risk Significant System at Station
  - Complex, deterministic Licensing Basis Issues
    - Tornado
    - High Energy Line Break (outside containment)
    - Appendix R (NFPA 805)
  - Common Risk Area – Turbine Building (Emergency Power Distribution Equipment)
  - Concept for NPBS (Natural Phenomena Barrier System) and PSW (Protected Service Water) (2004)
    - Objectives
      - Reduce Risk Worth of SSF
      - Provide framework for resolution of Licensing Basis Issues
    - Feasibility/Constructability Analyses (2005)
    - Initial Scope/Licensing approach development (2006)
    - Final Scope/commitment to construct (2007)
    - Licensing/Construction (In progress)

Background
Natural Phenomena Barrier System

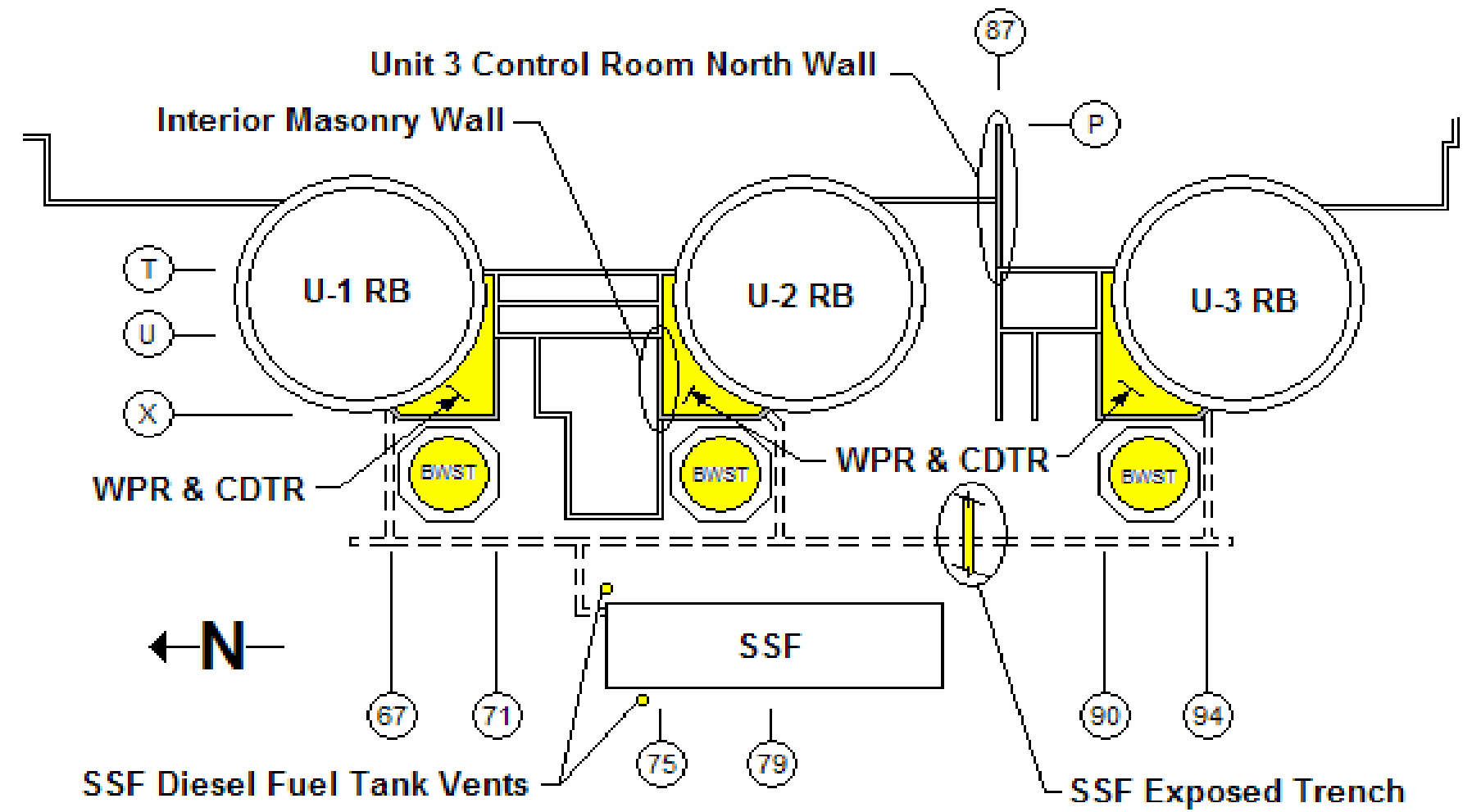

Background
Protected Service Water

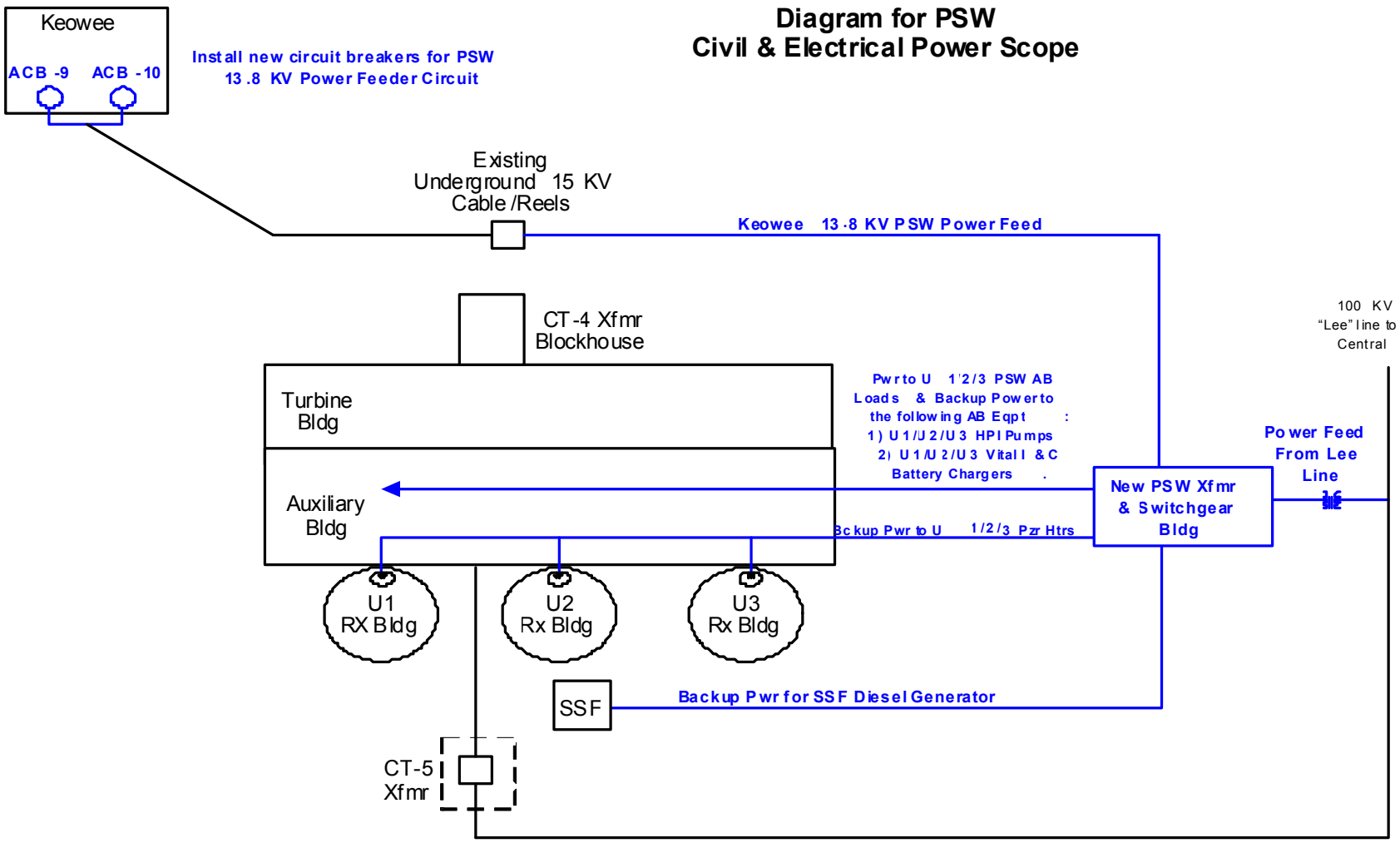

Background
Protected Service Water

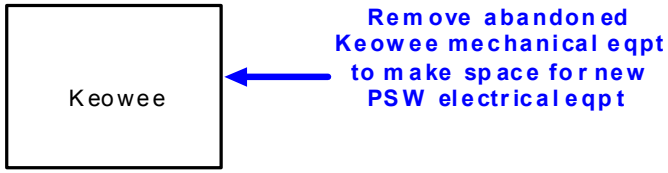

Diagram for PSW Mechanical Scope

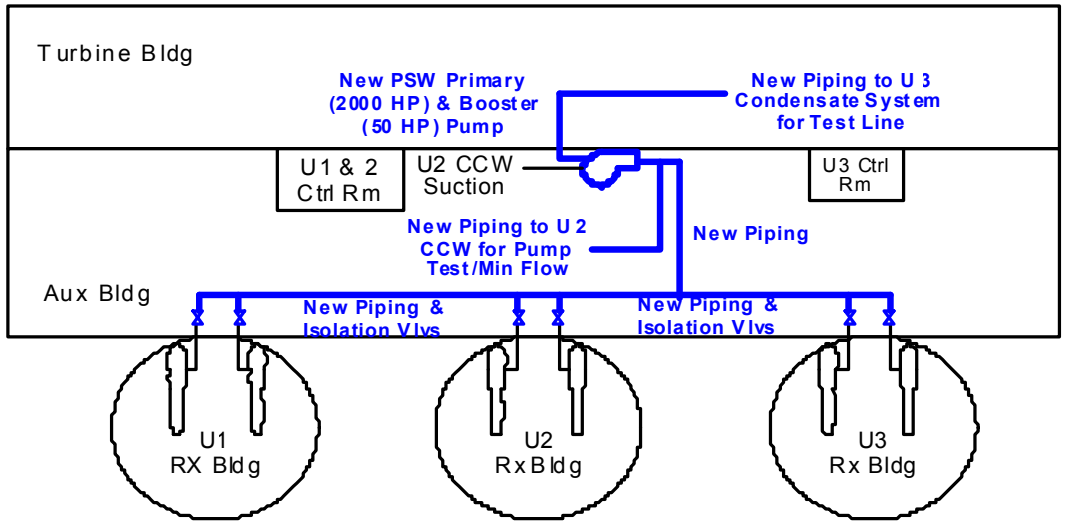

Background
Protected Service Water

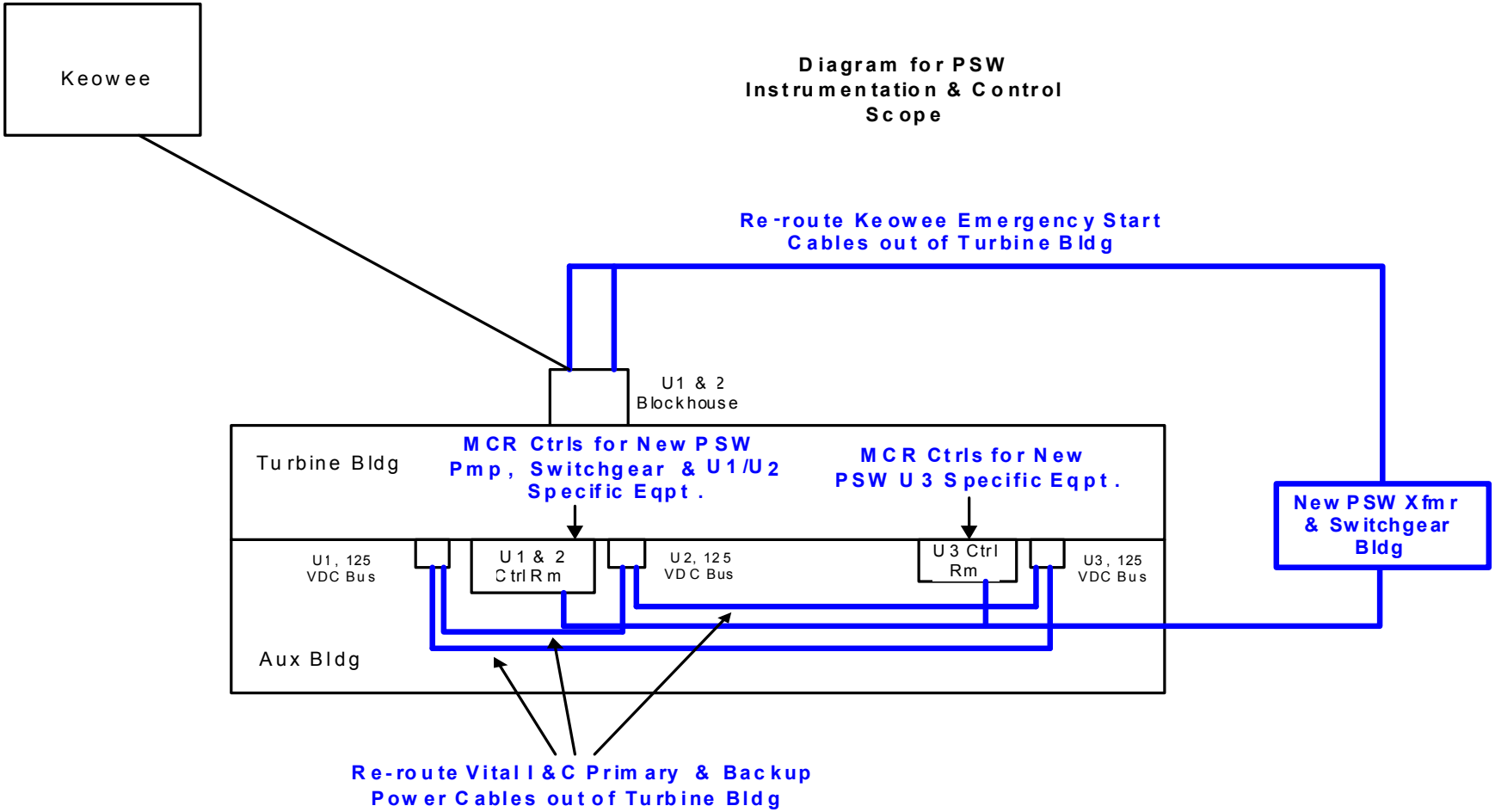

ONS NFPA 805 History

- Letter of Intent for transition to NFPA 805 submitted in February 2005
  - ONS became the first of two pilot plants
  - Pilot meetings with the NRC throughout the transition period
  - Originally estimated to take two years and $ 2 Million
- Initial LAR submitted on May 31, 2008
  - Was not complete – FPRA not final, modifications not determined
- Follow up LAR submitted on October 31, 2008
  - Complete in every detail except for submitting detailed modification descriptions
  - This LAR was based on the same methodology as the Harris Nuclear Plant (RG 1.205, Revision 0)
- Revised LAR submission planned for January 31, 2010
  - Revised to incorporate guidance given in Draft RG 1.205, Rev 1
  - More fully encompasses the flexibility allowed in NFPA 805

Guidance Affecting NFPA 805 Transition

- RG 1.205 Revision 0 to Revision 1
- RG 1.189 Revision 1 to Revision 2
- RG 1.174
  - Revised its use to apply risk to individual fire areas
- NEI 00-01 Revision 1 to Revision 2
- NEI 04-02 Revision 1 endorsed
  - FAQ process clarifies/expands on guidance in NEI 04-02
  - Additional clarification/expansion of NEI 04-02 guidance documented in the LAR
- New FPRA methodologies
- NRC Fire Testing

Oconee Nuclear Station Results/Lessons Learned

- Reconstitution
- Traditional Fire Protection
- Nuclear Safety Capability Assessment
- Fire Probabilistic Risk Assessment
- Non-power Operations
- LAR
- Configuration Control

Reconstitution

- Well documented Safe Shutdown Analysis (SSA) that identifies variances from the deterministic requirements (VFDR)
- Periodic modification reviews to maintain a current Safe Shutdown Analysis (SSA)
- Address Industry Issues
  - Identify IN 92-18 Concerns
  - Breaker Coordination
  - Multi-spurious Operation
  - Operator Manual Actions
  - Hemyc Notices, etc

Lessons Learned

1. Complete prior to starting transition to NFPA 805
2. Ensure any original assumptions are valid
3. This can be a significant cost within itself

Traditional Fire Protection (B-1 Table)

- Limited calculations supporting the original design basis
- Code Compliance calculations generated
- Generation of a new calculation for the B-1 Table
- License Amendment Request (LAR) contains
  - Licensing actions that require clarification of previous NRC approval
  - NFPA 805 Chapter 3 requirements that require NRC approval

RG 1.205 Revision 1 Effects:

1. Existing Engineering Equivalency Evaluations (EEEE) need only be submitted in summary form
2. Licensee is allowed to submit complete EEEE's if desired

Lessons Learned

1. Allow enough time to complete
2. Ensure any original assumptions are valid
3. This can be a significant cost within itself
4. The LAR should only submit items that require NRC approval

Nuclear Safety Capability Assessment (B-3 Table)

- Non compartmentalized fire areas could result in multiple unit events
- VFDR's were identified
- Change Evaluations originally developed from VFDR's in B-3 Table
- Manual action feasibility performed for recovery actions
- Thermal Hydraulic calculations required
- Analysis updated to reflect revision to Draft RG 1.205 Revision 1
  - Define Primary Control Station
  - Establish Mission Time
  - Determine recovery actions required to demonstrate availability of a success path
  - Evaluate risk of recovery actions

Nuclear Safety Capability Assessment (B-3 Table)

Draft RG 1.205 Revision 1 Effects:

1. Clarify Primary Control Station in all supporting calculations
2. Develop new process/methodology to classify recovery actions
3. Develop new process/methodology to describe “At Power” and “Non-power” fire safe shutdown capability
4. Revise Safe Shutdown Database, Fire Risk Evaluations, and NSCA calculations
5. Revise the recovery action feasibility calculation
6. Update the Fire PRA
7. Revise committed modification list

Lessons Learned:

1. New RG 1.205 Guidance improves clarity of the classification of the recovery actions
2. The development of the B-3 Table is an iterative process
3. For subsequent plants transitioning to NFPA 805, up front training is essential

Fire Probabilistic Risk Assessment (FPRA)

- PRA component selection
- Ignition sources
- Fire Compartment Geometry
- Thermal Hydraulic calculations were completed using MAPP
  (Some T/H analysis required more in depth verification using RETRAN)
- Developed Fire Scenarios for a given fire area
- Ranked fire scenarios by risk
- Used to credit plant fire features where needed to support safe shutdown
- Used to support Fire Area Risk Evaluations
- Used to recommend some of the NFPA 805 modifications
- NUREG 6850 turned out to be somewhat conservative (however NUREG 6850 still provides a good foundation to build a Fire PRA)
  - Use additional PRA techniques (fire modeling) when results are not realistic

Fire Probabilistic Risk Assessment (FPRA)

- FPRA/Safe Shutdown Analysis Team interface
- FPRA quality versus Appendix B concerns

RG-1.205 Revision 1 Effects:

1. Revise FPRA to evaluate the risk of each recovery action
2. Revise FPRA to reflect the included committed modifications
3. A revised FPRA requires a revision to all Fire Area Risk Evaluations, the NSCA, and the Operator Recovery Action Feasibility calculation

Lessons Learned

1. Need the rule/guidance changes locked down to minimize rework
2. While still conservative, the new FPRA's are working as designed
3. Time for maturing of the FPRA's should be incorporated into NRC evaluations
4. The FPRA and NFPA 805 allows the station to specify modifications applying risk insights
5. ONS required separate models due to unit differences – not originally envisioned
6. Ideally the PRA model should be built with the new reconstituted SSA

Non-Power Operations (NPO)

- It was more complicated than anticipated to tie NPO components to Key Safety Functions as specified in FAQ 07-0040
- Non compartmentalized fire areas can present concerns as “pinch points”
- Piloting incorporation of cooldown activities as a separate module into NPO

RG-1.205 Revision 1 Effects:

1. Treatment of “At Power” and “Non-Power’” adjusted to take advantage of flexibility allowed in NFPA 805

Lessons Learned

1. More efficient process envisioned by incorporating Draft RG 1.205, Rev 1 from the start – i.e. No rework

License Amendment Request (LAR)

- Difficulties in providing the right amount of information to the NRC for acceptance and approval
- Very compressed LAR review periods due to pilot plant due dates

RG-1.205 Revision 1 Effects:

1. New License condition to be added
2. Most of the LAR sections will require revision to incorporate the RG-1.205, Rev 1 changes

Lessons Learned

1. ONS revised LAR will provide the template for the industry
2. A proper Duke Energy internal review period for a LAR this size (~ 1000 pages) is approximately 90 days
3. Pilot plants should complete pilot process before other stations are allowed to start transition

Configuration Control

- Fleet modification review process developed and implemented early in the transition
- The need for development of controls for new calcs and LAR information
- Post LAR program development
- Project process controls
- Integration of the new Final Safety Analysis (Design Basis Document) and Nuclear Safety Capability Assessment (SSA Calculation) into existing Engineering documents

RG-1.205 Revision 1 Effects:

1. No direct effects on this item

Lessons Learned

1. Resources required for post LAR program documents are committed to the completion of LAR activities
2. Modification and procedure controls need to be put into place prior to transition to protect LAR input
3. Non-pilot plants cannot lock down a schedule until pilot plant activities are complete and the LAR template is agreed to

Summary of Oconee Experience

- The Oconee NFPA 805 Project is into it's fourth year and current cost is ~ $18 Million. Estimating three years and $6 – 10 Million for subsequent transitions for each site, not including reconstitution
- Having stable guidance for NFPA 805 transition is important for effective project management
- Teamwork and communications
- Plant personnel frequently required for maintenance of operating units
- This is a very complicated process requiring significant change management including training of station personnel
- Different designs of nuclear plants present some challenges to generic NFPA 805 submittals and programs
- Duke Energy supports approval of Draft RG 1.205 Revision 1

Regulatory Guide 1.205

ACRS

Reliability & PRA Subcommittee

November 13, 2009

NEI
NUCLEAR ENERGY INSTITUTE

Fire PRA

- Regulatory Guide 1.205 addresses fire PRA considerations for NFPA 805
  - Reg. Guide 1.200 process is used
  - In addition, "frequently asked questions" are used to provide regulatory expectations for specific fire PRA methods
  - Some of the method issues have been discussed with the subcommittee previously
  - NRC stated at commission briefing that these FAQs "close" the remaining fire PRA issues

NEI

Fire PRA FAQs

- Fire PRA issues are not closed by the FAQs
- These methods still do not provide PRA results that comport with operating experience
- Substantial work remains to address:
  - Interim Solutions in "Closed" issues
  - Numerous additional issues never submitted to FAQ process
- The state of fire PRA needs to be acknowledged and addressed in the Reg. Guide

NEI

Reality Check: Electrical Cabinet Fires

Risk = f(likelihood, severity)

Likelihood

- Events back to 1968 (pre-Appendix R)
  - Factor of ~2
- Inclusion of "Indeterminate" fires
  - ~30% increase

Severity

- Use of unqualified cable tests qualified cabinets
  - >3x HRR
- Reliance on limiting fire tests
  - Use of accelerants, burners, & flammables to start fires
  - Cabinet doors open
  - 12 min ramp up to peak HRR

Result:

3,000 yrs of operating experience ≈ 13 "severe" fires

NUREG/CR-6850 Prediction > 130 very severe fires

NEI

Planned Fire PRA Improvement Activities
Red Indicates "closed" for RG 1.205

- High Energy Arcing Faults*
- Large Oil Fires*
- Incipient Fire Growth in Electrical Cabinets*
- Credit for Incipient Detection*
- Hot Short Probabilities
- Fire Ignition Frequency*
- Fire Suppression Probabilities*
- Hot Short Duration*
- Enhancement of Fire Event Database
- Peak heat release data review and analysis, testing
- Control Room Modeling and Treatment in the Fire PRA
- Human Reliability methods and performance shaping factors
- Control vs suppression of fires
- Ignition frequency treatment of standby components
- Fire growth and propagation investigation
- Incipient detection testing
- Transient Fire HRR
- Empirical data and comparison with fire PRA
- Update of the Fire PRA Standard
- Additional Peer Review Guidance

NEI

Fire PRA Concerns

- Use of immature and conservative methods could lead to incorrect decision making for NFPA 805 and other PRA applications
  - Plant modifications to reduce exaggerated fire risk
  - Risk management actions, especially with respect to more realistic internal events scenarios when compared to fire
  - Incorrect depiction of total plant risk through simple summing of risk metrics

NEI

Proposed Improvement to RG 1.205

- Reg Guide 1.205 should:
  - Identify and address the need for improved fire PRA methods
  - Provide cautions relative to risk masking and skewing due to model bias using "FAQ" approaches
  - Allow for improved PRA methods to be applied as they are developed: e.g. follow original intent of RG 1.200
  - Provide process for adjustment of proposed plant modifications based on improved risk insights

NEI

Conclusion

- NFPA 805 is schedule driven
  - Industry and NRC have major efforts underway on fire research and Fire PRA improvement
  - This will take time beyond NFPA 805 schedule
- Reg Guide 1.205 should acknowledge:
  - The current immature state of fire PRA
  - The importance of realistic methods
  - The need to provide a regulatory process to accommodate improved PRA insights
- Realism remains important if PRA is to be viable decision making tool

NEI

NFPA 805 Transition Results and Impact Due to RG 1.205, Rev 1
11/13/2009

Jeff Ertman, NFPA 805 Project Manager

Dave Miskiewicz, Principal PRA Engineer

NGG
Think Fleet.

Progress Energy

Topics

- NFPA 805 Impact on Plant
  - Integration of Skill Sets and Tech Areas
  - Post Transition Program
- Fire PRA Results
  - Overview CDF LERF Results
  - Realism / FSS
  - Risk of Recovery Actions / Progress Energy Philosophy
- Impact of RG 1.205, Rev 1 on Transition

Integration of PRA/SSA/Classical FP

- Includes Primary Skill Sets:
  - Classical Fire Protection Program
    - Including Fire Modeling
  - Safe Shutdown Analysis
  - Fire Probabilistic Risk Analysis

Example Ignition Source

- Performance Based – Follow the Physics
  - Data Gathering
  - Engineering Analysis

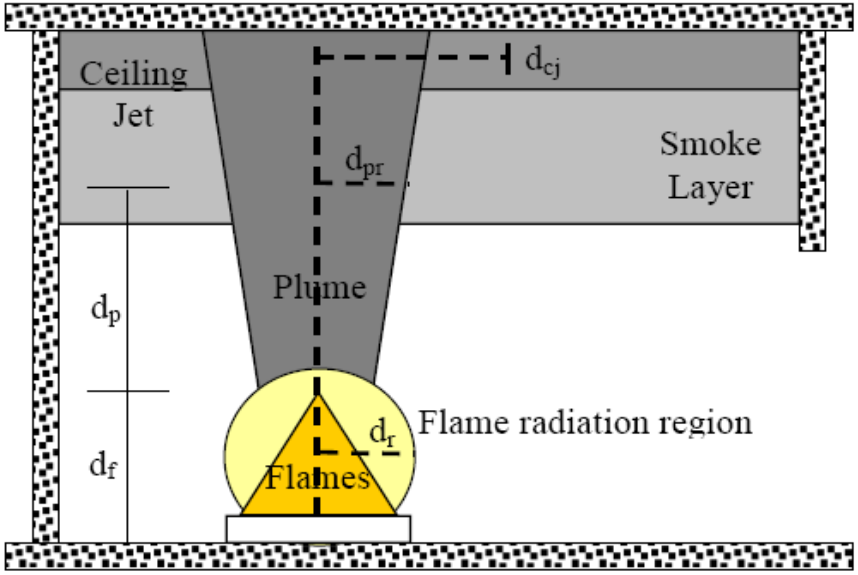

Example Data

Identification of Important Fire Scenarios in a Compartment – Examples Shown

Ignition Source Examples	Ignition Source Description	Example Targets
FC99_S99001	Control Panel	Tray10, Conduit 11555
FC99_S99002	Inverter	Conduits 88899, 34666
FC99_S99003	Electrical Panel	Panel 200, Tray 50
FC99_S99004	MCC	Trays 30, 60, 90

Classical Fire Protection Elements

- Fire Prevention
- Building Construction / Fire Barriers
- Suppression / Detection
- Fire Response
- Control of Transients
- Impairments / Comp Measures

SSA / Appendix R

- Deterministic Plant Model
- Plant Systems Modeled
- Equipment and Cables Modeled
- Non Power Operations
- Operator Manual Actions for Fire
- Protect the Process

Fire PRA

- Spatial Analysis
- Classical Fire Protection Inputs
- Safe Shutdown / Cable Routing Inputs
- Plant Systems Risk Model Used as an Input
- Built to ASME / ANS RA-S-2008

Integration

- Risk Informed Plant Change Process
  - Ignition Sources / Fire Scenario
  - Classical FP Features / Program
  - NSCA / NPO (Safe Shutdown)
  - Preliminary Risk Review
  - Detailed Risk Analysis

Bringing Two Worlds Together

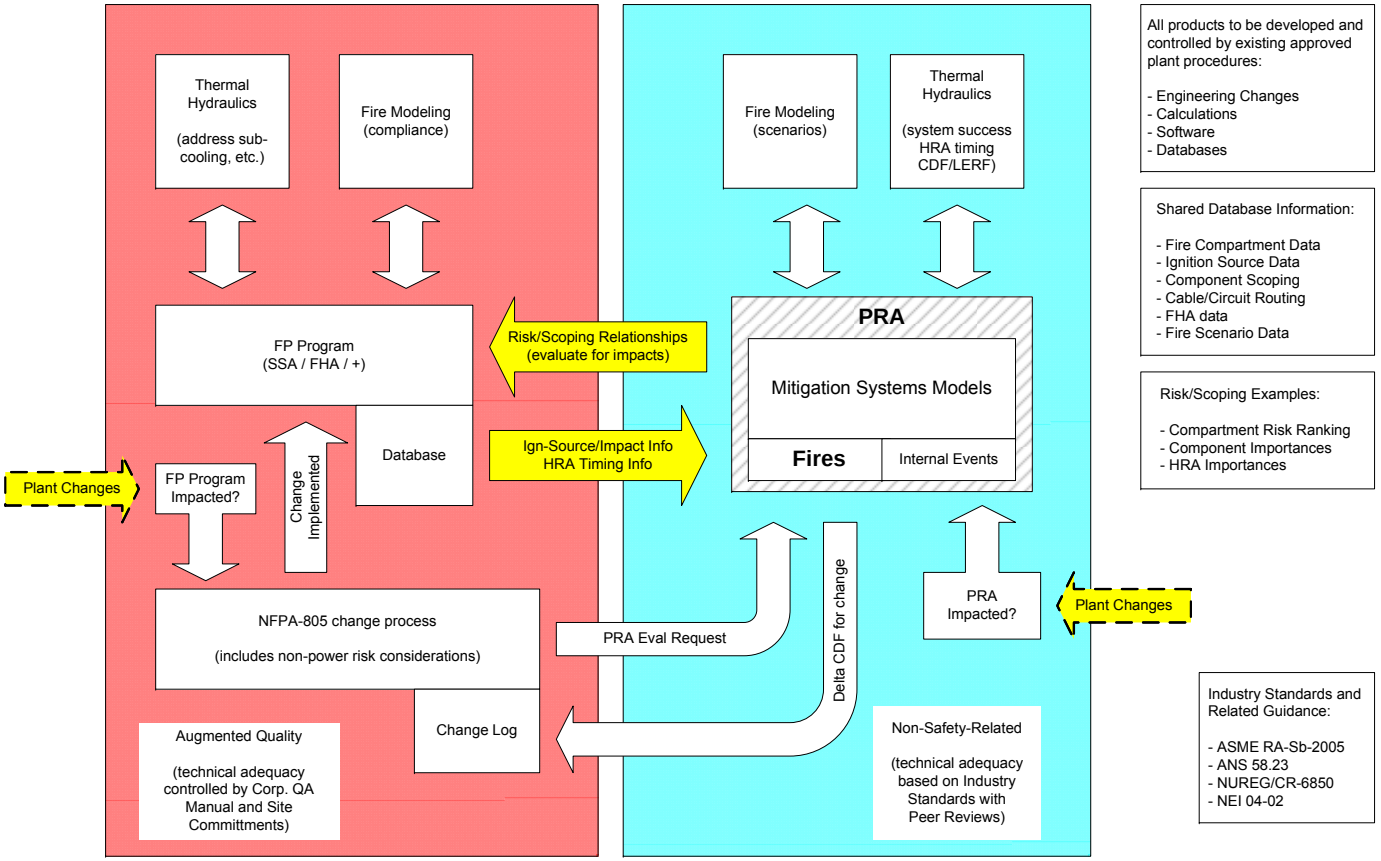

Fire PRA / Fire Protection Program Interface

NFPA 805 Pilot Status

- RAI Responses/ Supplement 3 Completed, 10/9/09
- Program Implementation Mid 2010
- Modifications Complete by End of 2010

Progress Energy Fleet Status

- Incorporating Lessons Learned
  - Pilot Plant RAI Responses
  - RG 1.205, Rev 1 When Issued
  - Pilot Plant SERs When Issued

- Reassessing LAR Schedules

Fire Protection Improvements

- Specific Fire Scenarios Evaluated
- Reliance on Operator Manual Actions Significantly Reduced
- NFPA 805 Transition and Modifications Resulted in Overall Plant Risk Reduction
- Example Modifications Installed:
  - Hemyc/MT Fire Wrap Barriers Upgraded
  - Incipient Detection / Alternate Seal Injection

NFPA 805 Decision Making

- Ensure Fire Defense-In-Depth Maintained
- Input from Various Sources:
  - Classical / Safe Shutdown / PRA / Others
- Risk Informed Post Transition Plant Change Process

Fire PRA Development

- Internal Events Model/Documentation Revised for RG 1.200 and Peer Reviewed
- Fire PRA Primarily Performed In-House
  - Reviewed by NRC and Industry
- Strong Communication With:
  - NRC, Oconee, NEI
- Used NUREG/CR-6850 as the Template
  - Some Early Departures
    - √ Compartments
    - √ Scoping
    - √ Screening

Fire PRA Development Stats

- Over **50** Model Logic Changes to Incorporate SSA and MSO Components/Impacts
- Over **400** PRA Components Added to the SSD Cable Routing Database
- Over **1900** Ignition Sources and Over **21,000** Targets Identified Primarily by Walkdowns
- Detailed Circuit Analysis Performed on Over **2000** Cables
- Fire Modeling Insights Applied to Over **70** Sources
- Over **2400** Scenarios Remain in Current Analysis

Fire PRA Results

- CDF = 3.06E-05/yr
- LERF = 3.48E-06/yr

Top Contributing Compartments (CDF)

Compartment	Fire Area	Description	% Fire CDF
FC35			44.8%
FC54			17.9%
FC02			14.7%
FC41			8.1%
FC34			7.1%
FC03			3.1%
FC18			2.5%
		cumulative	**98.2%**

NFPA-805 Transition Results

- ΔCDF = -5.8E-07/yr , ΔLERF = -3.64E-08/yr

Compartment	Area	Desc	dCDF (wrap)	dCDF (cables)	dCDF Total
FC35			0.00E+00	1.05E-06	1.05E-06
FC18			5.57E-09	6.21E-08	6.77E-08
FC30			0.00E+00	1.06E-08	1.06E-08
FC29			1.68E-10	2.07E-09	2.24E-09
FC17			2.71E-11	1.70E-09	1.73E-09
		Total	5.77E-09	1.12E-06	**1.13E-06**

	dCDF	dLERF
Type 1 VFDRs	1.12E-06	5.35E-08
Type 2/3 VFDRs	5.77E-09	1.09E-10
Total for VFDRs	1.13E-06	5.36E-08
Internal Events	-1.71E-06	-9.00E-08
Total	-5.80E-07	-3.64E-08

Conservatisms in Results

- Electrical Cabinet Fires Propagation Time from Alarm to Target Damage
  - Treatment of Vented, Non-Vented, and Sealed Electrical cabinets
  - Electrical Cabinet Fire HRR
- All Cable Damage/Ignition Based on Lower Bound Threshold
- LOOP Circuit Analysis
  - Transformer Yard and Turbine Building Fires
- No Credit for Incipient Detection in MCR
- No Credit for Hot Short Self Recovery

PRA Fire Modeling Basics

Simple model -
Scenario treated as an open fire located 1 ft below top of cabinet.

More tools needed to justify cabinet integrity, vented cabinet HRR.

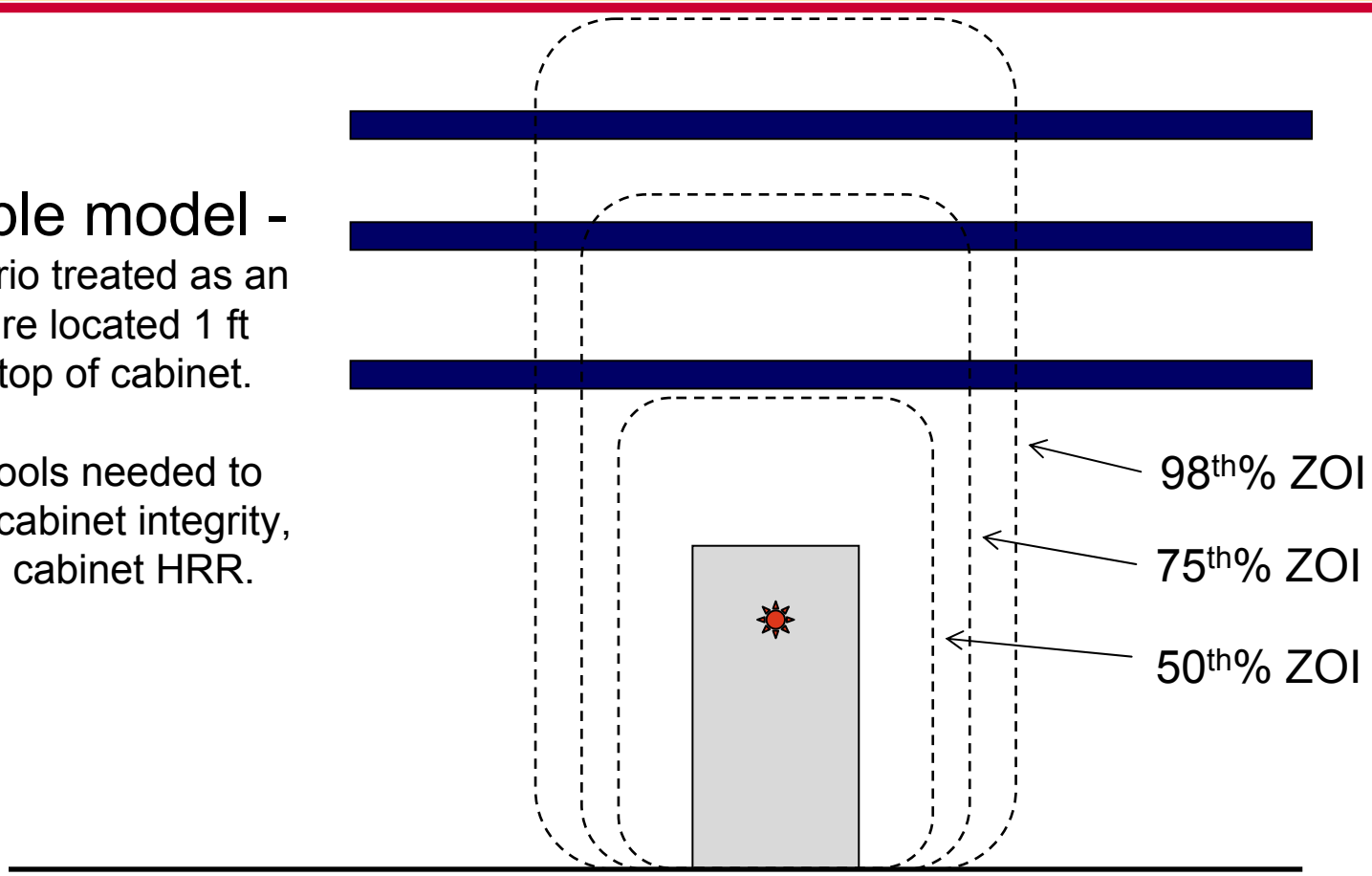

Front View

PRA Fire Modeling Basics

Detailed model -

Scenario treated as a fire located inside of cabinet with limited air supply and hot gas flowing from vents.

Inside geometry and ignition components and combustibles will also have an impact.

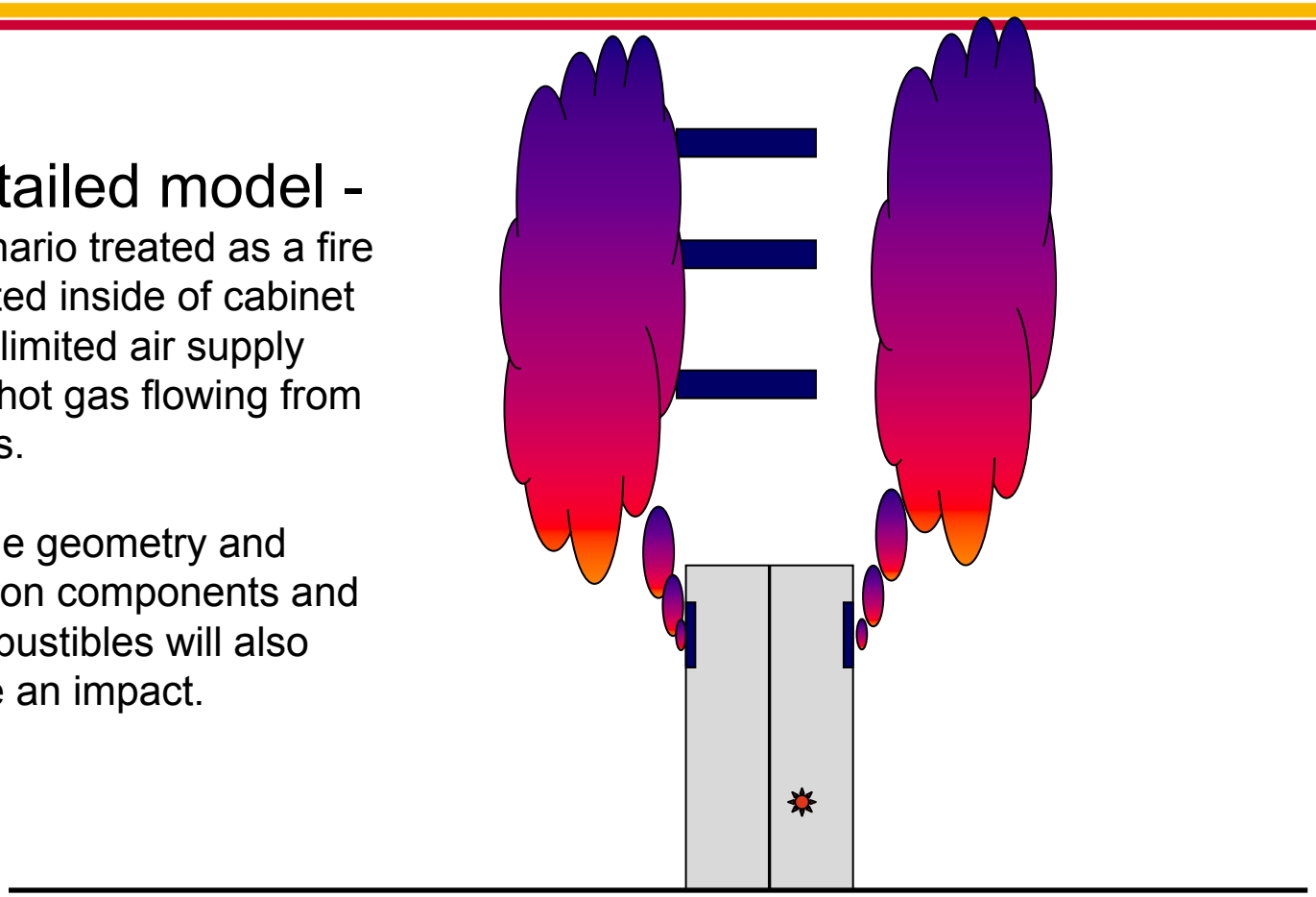

Side view

Other Remaining Uncertainties

- Ignition Frequency Methodology
  - Per Plant vs. Per Source
- Treatment of Generic Barriers such as Coatings and Solid Bottom Trays
- The Human Component
  - Fire Suppression
  - Procedure Response
  - Command and Control Decisions
- Alternate Shutdown Treatment
- FAQ Interim Solutions

Risk of Recovery Actions

- All Existing Fire Procedure Recovery Actions (RA) were Reviewed to Identify Potential Adverse Impacts
  - Any Actions Identified as Adverse were Either Eliminated or Conditioned to Remove the Adverse Potential
- No Specific RAs are Credited in Harris Fire PRA
  - ASD is a Special Case
- Cables Hits Prompting RAs are Identified as VFDRs
  - The Cable Risk Bounds the Potential RA Risk
  - Exception CSD and ESFAS Not Protected Path
- All VFDRs are Included in the ΔRISK Analysis
- If the Area ΔRISK is Acceptable Additional RA Risk Analysis is Not Required (Risk of Potential RA is Bounded)

Remaining Challenges
(Post Transition – Not Piloted Yet)

- Plant Changes
  - Preliminary Risk Screening per NEI 04-02
  - Cumulative Risk Tracking
- Incorporating Methodology Updates
  - Impact on Risk Insights
  - Evolving PRA Standard
- Post Transition Program Inspection Process
  - Inspection Scope/Focus
  - Treatment of Findings
    (NFPA-805 compatibility with SDP methods)

PE Perspective
RG 1.205 Changes in Rev 1

- Change Evaluations vs. Risk Evaluations
- Risk of Recovery Actions
  - Changed Direction from Rev 0
  - Primary Control Stations
  - Fire Affected Train vs. Protected Train
- License Condition

Questions?

Acronyms

- PRA – Probabilistic Risk Analysis
- SSA – Safe Shutdown Analysis
- MCR – Main Control Room
- NSCA – Nuclear Safety Capability Assessment
- NPO – Non Power Operations
- LOOP – Loss of Offsite Power
- HRR – Heat Release Rate
- VFDR – Variance From the Deterministic Requirement
- RA – Recovery Action

Steven Laur

Senior Level Advisor

Division of Risk Assessment

Office of Nuclear Reactor Regulation

Regulatory Guide 1.205, Revision 1
Standard Review Plan Section 9.5.1.2

ACRS Reliability and PRA Subcommittee

November 13, 2009

Overview

- 10 CFR 50.48(c) and NFPA 805, 2001 edition
  - Comprehensive and coherent regulation
  - Complex – needed pilot applications in order to fully understand nuances
- Regulatory Guide 1.205, Revision 1
  - Improved and additional guidance to facilitate compliance
  - Clear and consistent Regulatory Positions
  - Fully vetted:
    - Stakeholder comments received and considered
    - ACRS members' input (June 1, August 18, 2009)
    - Office concurrence received (NRR, NRO, RES, OGC)
    - Final draft shared with public (September 10, October 29, 2009)

Briefing Objectives

- ACRS sub-committee recommends that we brief the full committee at the December, 2009 meeting:
  - Endorse RG 1.205, Rev. 1
  - Endorse SRP 9.5.1.2 (new section)
- This guidance improves clarity and provides regulatory stability for both pilot plants and non-pilot plants
- Issuance of RG 1.205, Rev. 1, and SRP 9.5.1.2 at this time fosters clarity and regulatory stability

Presentation Topics

- Background
- RG 1.205 Changes since 8/18/09 ACRS Meeting
- Public Meeting Interaction
- Conclusion

Background

- Public comment periods:
  - SRP: February 5, 2009
  - RG: March 25, 2009

Comment Periods Closed:

- SRP & RG: May 22, 2009

- ACRS Subcommittee in June, August, November 2009
- CRGR review in July, 2009
- Public meetings with stakeholders in September and October 2009
- ACRS Full Committee scheduled for December 3, 2009

Changes Since 8/18/09 ACRS

- Cumulative Risk
  - Baseline risk to use in evaluating the effect of plant changes on cumulative risk: the risk of the plant at the point of full implementation of NFPA 805 (no "offset" carried forward)
- Sample License Condition
  - Allows self-approval of "no more than minimal risk increase" in the period between the new license and full implementation
- Risk of previously-approved recovery actions
  - The staff incorporated the flow chart presented to ACRS into the RG
- Primary Control Station
  - The staff incorporated the comments received from the ACRS subcommittee with regard to simplifying the definition

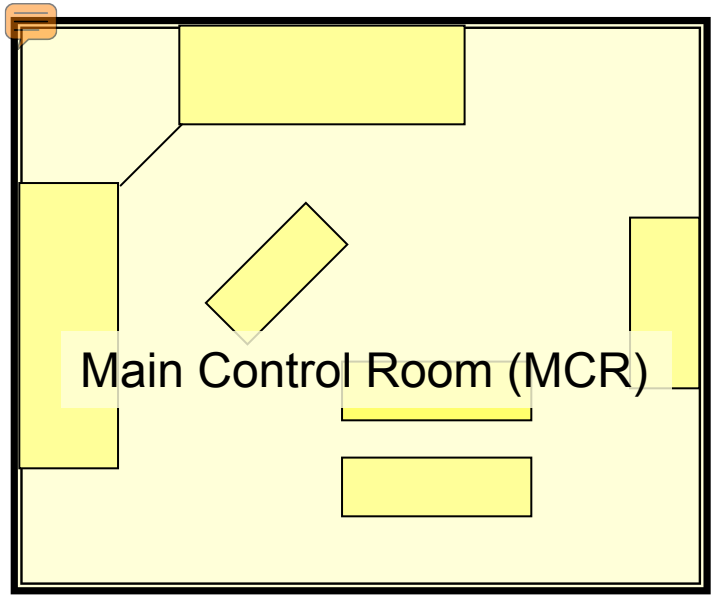

Control Room actions are not recovery actions

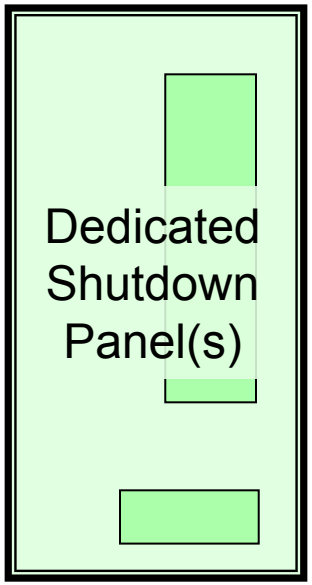

Dedicated Shutdown Panel† actions are not recovery actions when command and control is shifted from the MCR

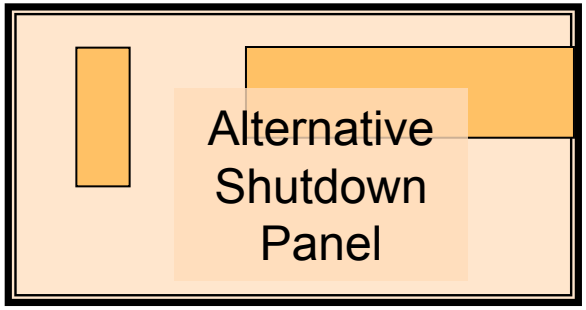

Alternative Shutdown† actions are not recovery actions when control is shifted from the MCR provided:

- Primary command & control
- Requisite controls, indications, & communications
- Multiple components controlled from location

† *As defined in Appendix R III.G.3 and NRC-approved*

Public Meeting Interaction

- The NRC staff incorporated the majority of stakeholder comments
- Remaining regulatory positions are necessary to foster clarity and regulatory stability
- Members of industry agreed that RG 1.205, Rev. 1 should be issued ASAP to contribute to NFPA 805 regulatory stability

Public Meeting Interaction

- Industry expressed concerns in the following areas:
  - Guidance not fully vetted (e.g., fire risk evaluations)
  - Recovery Actions (e.g., definition of “success path”)
  - License Condition (placement of “minimal risk increase” paragraph)
  - Post-Transition Change Evaluation Process (RG focuses on detailed risk evaluation)
- NRC will continue to utilize the FAQ process to further refine implementation details

Conclusion

- Regulatory Guide 1.205, Revision 1 and SRP 9.5.1.2
  - Incorporate the significant lessons from the pilot plants
  - Provide clear and consistent guidance to facilitate compliance with a comprehensive and complex regulation
  - Fully considered stakeholder comments
    - majority of comments were incorporated into the final drafts
    - a few stakeholder comments were not incorporated because of requirements in the rule
- Issuance of RG 1.205, Rev. 1, and SRP 9.5.1.2 at this time fosters clarity and regulatory stability
- The staff requests the ACRS endorse issuance of these two documents

Questions?

CONTINGENCY SLIDES

RISK OF RECOVERY ACTIONS IN NFPA 805

4.2.3.1 One success path of required cables and equipment to achieve and maintain the nuclear safety performance criteria without the use of recovery actions shall be protected by the requirements specified in either 4.2.3.2, 4.2.3.3, or 4.2.3.4, as applicable. Use of recovery actions to demonstrate availability of a success path for the nuclear safety performance criteria automatically shall imply use of the performance-based approach as outlined in 4.2.4.

4.2.4* Performance-Based Approach. When the use of recovery actions has resulted in the use of this approach, the additional risk presented by their use shall be evaluated.

When the fire modeling or other engineering analysis, including the use of recovery actions for nuclear safety analysis, is used, the approach described in 4.2.4.1 shall be used.

When **fire risk evaluation** is used, the approach described in 4.2.4.2 shall be used.

4.2.4.1 Use of Fire Modeling
The approach in 4.2.4.1.1 through 4.2.4.1.6 shall be used.

4.2.4.2 Use of Fire Risk Evaluation. Use of fire risk evaluation for the performance-based approach shall consist of an integrated assessment of the acceptability of risk, defense-in-depth, and safety margins.

The evaluation process shall compare the risk associated with implementation of the deterministic requirements with the proposed alternative.

The difference in risk between the two approaches shall meet the risk acceptance criteria described in 2.4.4.1.

The fire risk shall be calculated using the approach described in 2.4.3.

2.4.3* Fire Risk Evaluations.
The PSA methods, tools, and data … for the performance-based valuation of fire protection features (*see 4.2.4.2*) or … the change analysis described in 2.4.4 shall conform with … 2.4.3.1 through 2.4.3.3.

2.4.4.1* Risk Acceptance Criteria.
The change in public health risk from any plant change shall be acceptable to the AHJ. CDF and LERF shall be used to determine the acceptability of the change.

Fire PRA – Quality

- Fire PRA technical adequacy – 2 aspects
  - Underlying PRA (i.e., the baseline model)
  - Analyses, assumptions, and approximations to map the cause-effect relationship associated with the application
- Method for addressing
  - Baseline PRA - conform to the peer review and self assessment processes in RG 1.200 (PRA Standard)
  - Fire Risk assessments - describe the specific modeling of each cause-effect relationship associated with the application
- Submittal guidance
  - Submit documentation described in Section 4.2 of RG 1.200
  - Generally accept Capability Category (CC) II for FPRA
  - Justify use of CC I for specific supporting requirements
  - Evaluate whether parts of the FPRA need to meet CC III

Fire Risk Evaluations

- Two similar (but different) risk evaluations in NFPA 805
  - Fire Risk Evaluations
    - Demonstrate adequacy of an alternate to the deterministic criteria
    - Each fire area (as applicable) and total plant fire risk change
  - Plant Change Evaluations
    - Changes to the "previously approved Fire Protection Program"
    - Cumulative risk must be considered
      - Cumulative risk calculation starts at implementation of NFPA 805 (including all necessary modifications)
    - Baseline for evaluating the cumulative affect of changes to the fire protection program is based on the fire risk at the point of implementation of NFPA 805

Enhanced Sample License Condition

- Allow non-risk informed changes to the fire protection program that have no more than a minimal risk impact
  - Consistent with intent of NEI 04-02, Revision 2
  - Allow screening per process approved in the NFPA 805 license amendment
- Incorporated information regarding *functional equivalency* and *adequate for the hazard* (FAQ-06-0008) into the sample license condition (from §3.2.4)

Recovery Actions

Definition: “Activities to achieve the nuclear safety performance criteria that take place outside of the main control room or outside of the primary control station(s) for the equipment being operated including the replacement or modification of components”

(NFPA 805 §1.6.52)

Recovery Actions in NFPA 805

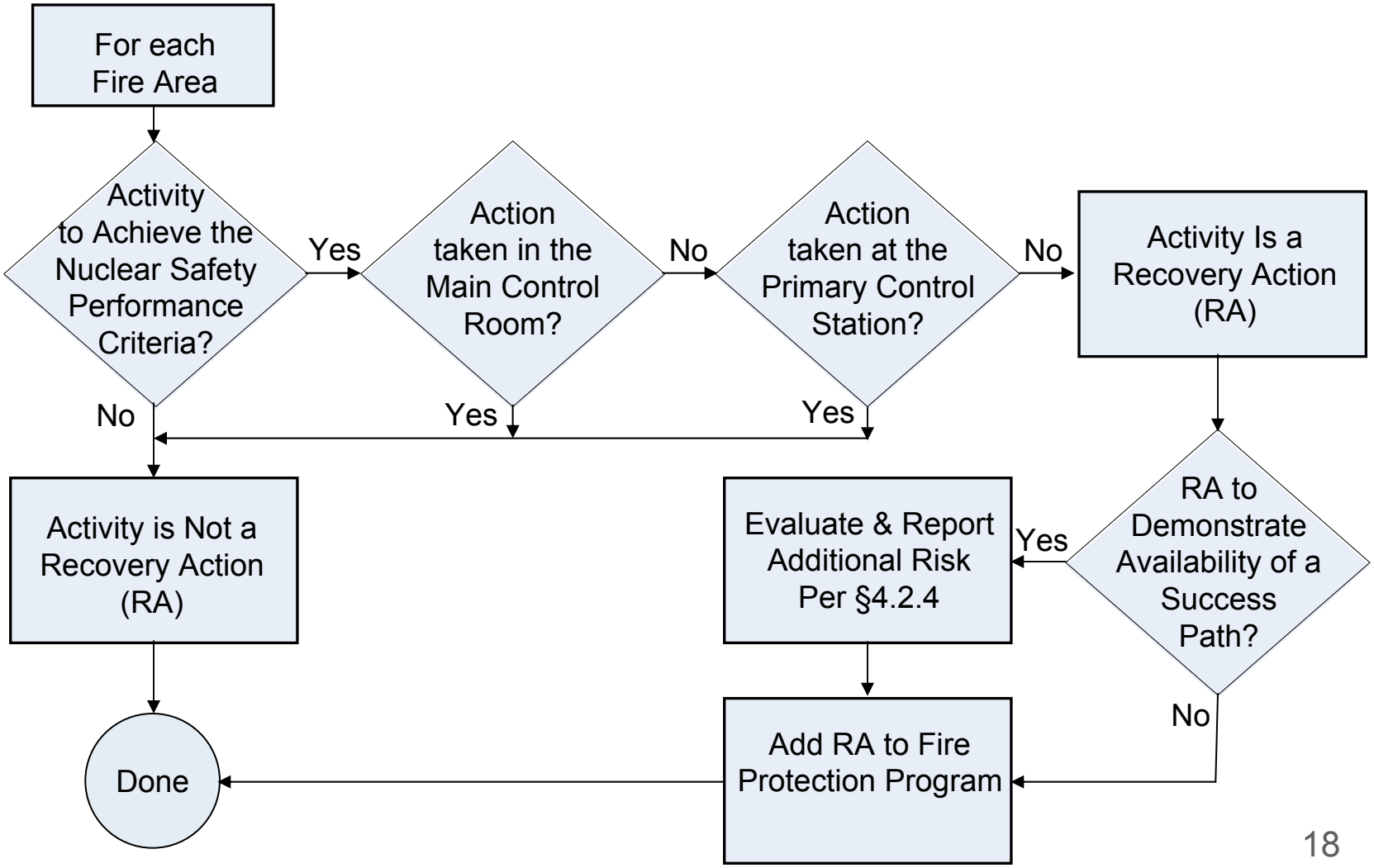

Application of RG 1.174 to NRC Staff Review During Transition (by Fire Area)

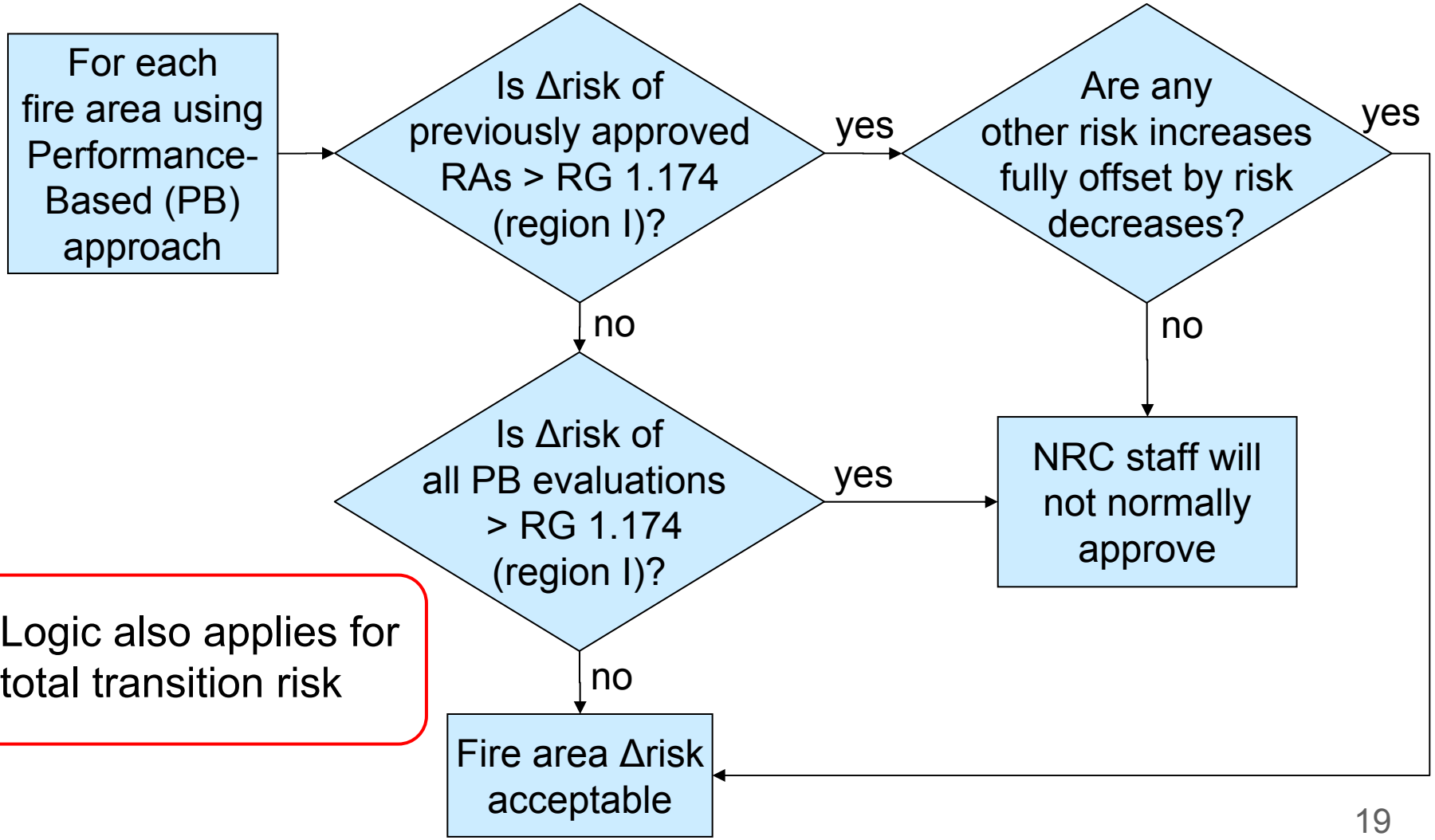

Logic also applies for total transition risk

Case 1: Additional Risk of Previously-Approved Recovery Actions is Within RG 1.174

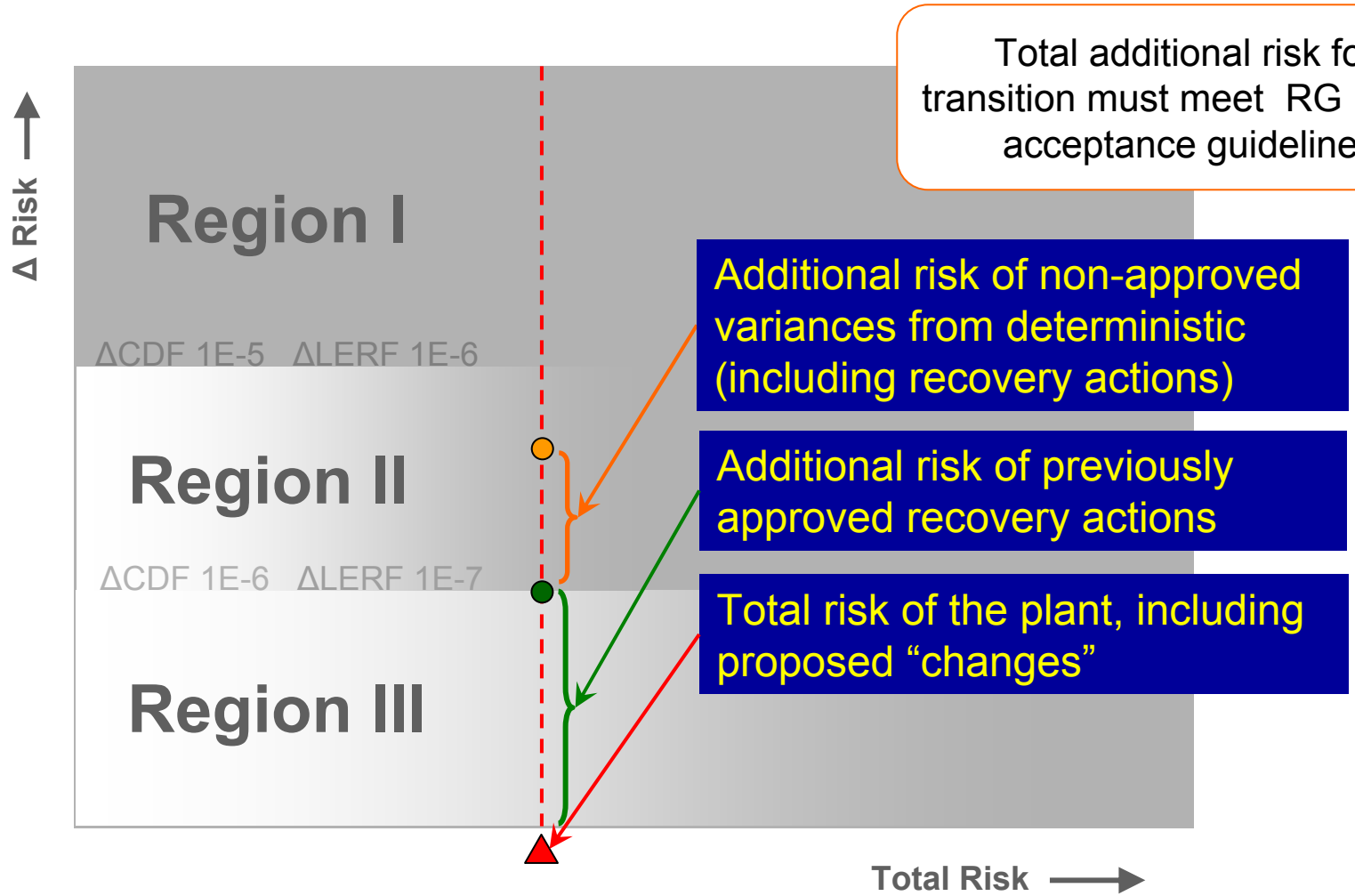

Case 2: Additional Risk of Previously-Approved Recovery Actions Exceeds RG 1.174

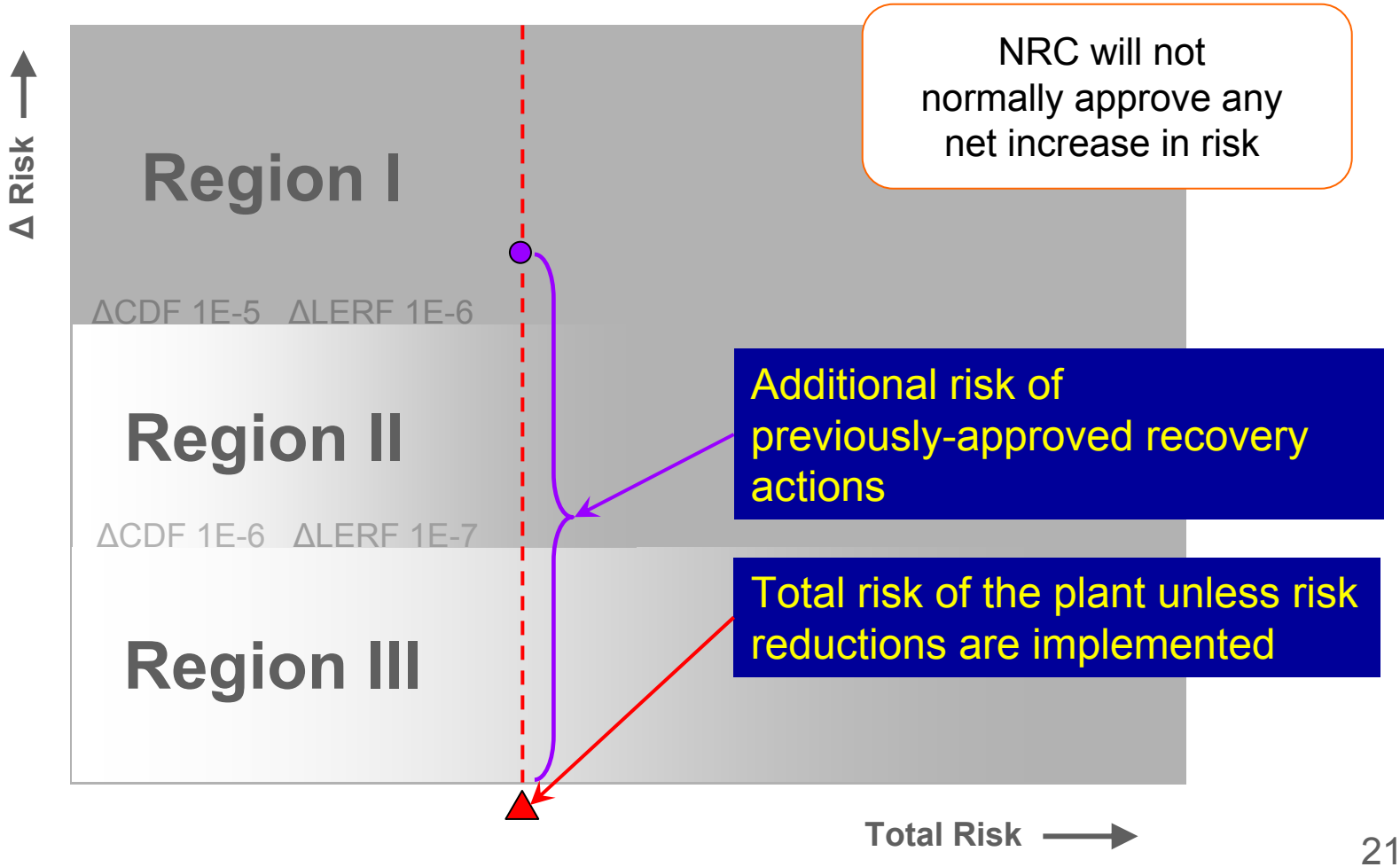

Clarified Definition of Primary Control Station

- RG 1.205, Rev. 1 defines “primary control station” (details on next slide)
- The definition recognizes that NRC-approved Appendix R III.G.3 approaches should “carry over” to NFPA 805 if certain criteria are met
- The staff incorporated the comments received from the ACRS subcommittee with regard to simplifying the definition

Standard Review Plan 9.5.1.2

Guidance to NRC staff is consistent with RG 1.205, Rev. 1

Follows general SRP format:

I. AREAS OF REVIEW

II. ACCEPTANCE CRITERIA

III. REVIEW PROCEDURE

IV. EVALUATION FINDINGS

V. IMPLEMENTATION

VI. REFERENCES

Attachment 1 – Risk-Informed/Performance-Based Fire Protection Program LAR Acceptance Review Matrix

SRP REVIEW PROCEDURE
(Section III)

1 PROGRAMMATIC REVIEW OF LICENSE AMENDMENT REQUEST

2 FUNDAMENTAL FIRE PROTECTION PROGRAM ELEMENTS AND MINIMUM DESIGN REQUIREMENTS

3 NUCLEAR SAFETY PERFORMANCE CRITERIA

4 RADIOACTIVE RELEASE PERFORMANCE CRITERIA

5 RISK ASSESSMENTS AND PLANT CHANGE EVALUATIONS

6 MONITORING PROGRAM

7 PROGRAM DOCUMENTATION, CONFIGURATION CONTROL, AND QUALITY ASSURANCE

✓ *Pilot plant Safety Evaluation Reports will follow this same general outline.*