1 **ID: QDC.ILT.15486** **Points: 1.00**

Unit 1 was at full power when the 1A and 1B Reactor Recirc pumps tripped, resulting in the following conditions:

- 40% Rated Thermal Power
- 25% Rated Core Flow

Continued Reactor operation in this condition is...

A. acceptable because the Reactor is operating outside of the Instability Regions.

B. NOT acceptable because Core thermal safety limits may be exceeded due to potential power oscillations.

C. NOT acceptable because Reactor pressure/temperature limits may be exceeded due to thermal stratification.

D. acceptable because OPRMs are functioning to protect Core thermal safety limits while operating with natural circulation.

Answer: B

Answer Explanation:

Answer: When the Reactor is in RUN and no Recirc pumps are operating, then the potential exists for very large power oscillations to occur and Core thermal safety limits to be exceeded before RPS actuates. Therefore a manual Reactor scram is required on a trip of both Recirc pumps.

Distractor 1 is incorrect: The current plant conditions place the Reactor in Instability Region 1.
Distractor 2 is incorrect: At 48% power, circulation within the core is enough to prevent thermal stratification.
Distractor 3 is incorrect: QCOA 0202-05 requires a manual scram even if OPRMs are online and functional.

Reference: QCOA 0202-05 Rev 14
Reference provided during examination: N/A

Cognitive level: Memory

Level (RO/SRO): RO
Tier: 1 Group: 1

Question Source: New
Question History: N/A

10 CFR Part 55 Content: 41.8 to 41.10

Comments: None.

Associated objective(s):

295001.AK1.03 Thermal limits (RO=3.6 / SRO=4.1)

SR-0202-K22 (Freq: LIC=B) Given a Reactor Recirculation System operating mode and various plant conditions, PREDICT how key Reactor Recirculation / plant parameters (including power/flow map shifts) will respond to the following failures:

a. RRCS major failure
b. Reactor recirc pump seal failure (one or both)
c. Reactor recirc pump trip (one or both)
d. Single loop operation with operating pump speed above/below 40%
e. Jet pump or shroud access hole cover failure
f. Recirc flow controller fails high or low
g. Recirc AC oil pump trip
h. Recirc vent fan trip
i. Reactivity additions
j. Core instabilities exist
i. Reactivity additions
j. Core instabilities exist

2 **ID: QDC.ILT.15585** **Points: 1.00**

Unit 1 is at full power when the following occurs:

- A.C. power to the in-service 125 VDC Battery Charger is lost due to Bus 14 tripping on overcurrent.

Following the trip of Bus 14, the Unit 1 125 VDC battery...

A. float charge will automatically swap to the standby battery charger.

B. will discharge for 13 seconds then automatically return to an equalize charge.

C. will discharge until a battery charger is manually returned to service.

D. will discharge for 13 seconds then automatically return to a float charge.

Answer: D

Answer Explanation:

Answer: Normal power to the Unit 1 125 VDC Battery Charger #1 is MCC 19-2. A loss of Bus 14 will result in a loss of MCC 19-2 until the Unit 1 EDG energizes Bus 14-1 and power returns to the charger.

Distractor 1 is incorrect: Plausible if the candidate believes that the battery auto-swaps to the Unit 1 125 VDC Battery Charger #1A.
Distractor 2 is incorrect: Plausible if the candidate believes that the an equalizing charge will be present due to the battery previously discharging (must be manually aligned for equalize charge).
Distractor 3 is incorrect: Plausible if the candidate believes that manual action is required to restore the battery to a float charge following a loss of power.

Reference: QOA 6500-04 Rev 16, UFSAR Section 8.3.1.6.1 Rev 8, QOA 6700-05 Rev 18, QOM 1-6700-T28 Rev 4, LN-6500 Rev 13, LN-6900 Rev 12
Reference provided during examination: N/A

Cognitive level: High

Level (RO/SRO): RO
Tier: 1 Group: 1

Question Source: Modified from Nine Mile Point (Bank # 54198)
Question History: Nine Mile Point 2008 ILT NRC Exam

10 CFR Part 55 Content: 41.7

Comments: None.

Associated objective(s):

295003.AK2.01 Station batteries (RO=3.2 / SRO=3.3)

SRN-6900-K20 (Freq: LIC=B NF=B)
Given a Station DC Electrical Systems operating mode and various plant conditions, EVALUATE the following Station DC Electrical Systems indications/responses and DETERMINE if the indication/response is expected and normal.

a. Station battery chargers
   (1) DC volts / amps
   (2) Status lights
b. Station batteries
   (1) Volts
   (2) Amps
   (3) Ground volts
c. Station DC bus volts
d. DC breaker/fusible link position

3 **ID: QDC.ILT.15489** **Points: 1.00**

Unit 1 is at 80% Reactor power with all systems in their normal lineup.

If 24/48 VDC Bus 1A on Unit 1 is LOST, a HALF-SCRAM on RPS Channel A will occur due to a loss of power to...

A. OPRM Channel 1, 2, 3 and 7.

B. IRM Channel 11, 12, 13 and 14.

C. Analog Trip System Panel 2201-73AA.

D. Scram Discharge Volume (SDV) level instrumentation.

Answer: D

Answer Explanation:

Answer: Bus 1A supplies power to the North SDV high level transmitter and level switch LT 1-302-109J and LS 1-302-82J (RPS channel A2 on U-1) and the South SDV high level transmitter and level switch LT 1-302-109C and LS 1-302-82C (RPS channel A1 on U-1). A loss of power to the SDV level transmitters will result in a half scram (channel A).

Distractor 1 is incorrect: OPRM Channel 1, 2, 3 and 7 are powered from RPS A. When power is lost to RPS A, a half scram is generated.
Distractor 2 is incorrect: IRM Inop scram inputs are bypassed when the Reactor Mode switch is in RUN and the APRMs are not downscale.
Distractor 3 is incorrect: A loss of 125 VDC TB MN Bus 1A-1 will result in a 1/2 scram due to RPV high pressure (Panel 2201-73AA)

Reference: QOA 6900-03 Rev 12, QCAN 901(2)-5 A-14 Rev 9
Reference provided during examination: N/A

Cognitive level: High

Level (RO/SRO): RO
Tier: 1 Group: 1

Question Source: Modified from QDC.ILT.11817
Question History: N/A

10 CFR Part 55 Content: 41.5

Comments: None.

Associated objective(s):

295004.AK3.03 Reactor SCRAM: Plant-Specific (RO=3.1 / SRO=3.5)

SR-0500-K25 (Freq: LIC=B)
ANALYZE given key Reactor Protection System parameter indications and/or responses depicting a Reactor Protection System specific abnormality/failure using P&ID/C&IDs and E-prints, if necessary, and DETERMINE the most probable cause for the following abnormal condition(s):
a. Partial half scram
b. Failure to reset
c. Failure to scram
d. Half scram

4 **ID: QDC.ILT.15606** **Points: 1.00**

Unit 1 is at 85% power when a manual Turbine trip is required due to high Turbine vibrations.

Complete the following statements:

- The MINIMUM action required to manually trip the Turbine is by depressing __(1)__ Turbine trip pushbutton(s) on the 901-7 panel.
- Main Generator GCB 6-7 and 7-8 will indicate open __(2)__.

A. (1) both
(2) immediately following the Turbine trip

B. (1) both
(2) thirty (30) seconds following the Main Generator reverse power condition

C. (1) one
(2) immediately following the Turbine trip

D. (1) one
(2) thirty (30) seconds following the Main Generator reverse power condition

Answer: B

Answer Explanation:

Answer: A manual Turbine trip is initiated by depressing both Turbine trip pushbuttons. Both pushbuttons must be depressed at the same time to trip the Turbine. The generator will trip 30 seconds after a reverse power condition. When the Generator trips, the 86 device initiates and trips GCB 6-7 and 7-8.

Distractor 1 is incorrect: Plausible if candidate believes that a manual Turbine trip immediately trips the Generator (Note: The Turbine will immediately trip if the Generator trips).
Distractor 2 is incorrect: Plausible if candidate believes that only one pushbutton is required to trip the Turbine.
Distractor 3 is incorrect: Combination of distractor 1 and 2 above.

Reference: QOA 5600-04 Rev 26, QCAN 901(2)-8 A-12 Rev 2, QCGP 2-1 Rev 61, LN-5650 Rev 3
Reference provided during examination: N/A

Cognitive level: Memory

Level (RO/SRO): RO
Tier: 1 Group: 1

Question Source: New
Question History: N/A

10 CFR Part 55 Content: 41.7

Comments: Revised second part of question to test generator trip relationship (response to NRC comment).

Associated objective(s):

295005.AA1.04 Main generator controls. (RO=2.7 / SRO=2.8)

SR-5650-K21 (Freq: LIC=B) Given a Main Turbine Control - EHC Hydraulic System operating mode and various plant conditions, PREDICT how Main Turbine/EHC systems and plant parameters will respond to manipulation of the following Main Turbine Control - EHC Hydraulic System local/remote controls:

a. EHC pump control switches
b. EHC pump test start pushbutton
c. EHC filter pump control switch
d. Bypass valve test selector and test
e. Stop/Control Valve test selector and test
f. Combined intermediate valve test
g. Turbine trip pushbuttons
h. Turbine reset
i. Main turbine supervisory trip cutout switch
j. 12 percent overspeed circuit test button
k. Power/load unbalance circuit test button
l. Hydraulic Fluid Conditioning Skid controls
m. Thrust Bearing Wear Detector Test

5 **ID: QDC.ILT.15493** **Points: 1.00**

Unit 1 was at 100% power when the Reactor was manually scrammed.

Ten (10) seconds after the SCRAM is inserted, the following level indications are present in the Control Room:

- UR 1-640-27, FUEL ZONE, indicates +60 inches
- LI 1-263-114, RX LEVEL (digital), indicates 0 inches
- LI 1-263-100A, 1A RX VESSEL MEDIUM RANGE, indicates -20 inches
- UPPER WIDE RANGE, LI 1-263-101, indicates -42 inches

Using the above indications and current plant conditions, RPV water level must be reported as...

A. +60 inches

B. 0 inches

C. -20 inches

D. -42 inches

Answer: C

Answer Explanation:

Answer: The Medium Range LI is the accurate indication for the current plant conditions. The Medium Range LI is calibrated for HOT plant conditions with a range of -60" to +60".

Distractor 1 is incorrect: The Fuel Zone is inaccurate because it is calibrated for COLD plant conditions with both Recirc pumps secured. It is also at the top of its range.
Distractor 2 is incorrect: The digital Rx Level indication is from DFWLC. DFWLC uses the average of two Narrow Range and one Medium Range instrument. The digital indicator is clamped at 0 inches.
Distractor 3 is incorrect: The Upper Wide Range is inaccurate because it is calibrated for COLD plant conditions. It is also at the bottom of its range.

Reference: QCOP 0201-02 Rev 28
Reference provided during examination: N/A

Cognitive level: High

Level (RO/SRO): RO
Tier: 1 Group: 1

Question Source: New
Question History: N/A

10 CFR Part 55 Content: 41.10

Comments: None.

Associated objective(s):

295006.AA2.03 Reactor water level (RO=4.0 / SRO=4.2)

SR-0263-K20 (Freq: LIC=B)
Given a RPV Instrumentation System operating mode and various plant conditions, EVALUATE the following RPV Instrumentation System indications/responses and DETERMINE if the indication/ response is expected and normal.

a. Reactor pressure
b. Reactor level
c. RPV metal temperatures
d. RPV vessel flange/head flange temperatures
e. RPV seal ring pressure
f. RVLIS backfill flowrate

6 **ID: QDC.ILT.15603** **Points: 1.00**

The following conditions exist on Unit 1:

- Reactor power is 50%
- 1A and 1B RFPs are running
- DFWLC is in SINGLE-ELEMENT control
- Both FRVs and the LFFRV are in AUTO

Control Room conditions require an evacuation. The following step is given in QOA 0010-05, Plant Operation With The Control Room Inaccessible:

2. IF possible before Control Room evacuation, THEN:

a. Manually scram the Reactor from Panel 901(2)-5. Leave Mode Switch in RUN.

b. Observe proper operation of the Feedwater level control system during the post scram transient. It is desirable to leave the system in automatic on the low flow bypass valve if possible when the Control Room is evacuated.

Which of the following lists the MINIMUM actions required to execute Step 2.b?

Verify that following the scram, DFWLC...

A. remains in SINGLE-ELEMENT. No further operator action is required.

B. remains in SINGLE-ELEMENT. When RPV water level is recovering, manually place the 1A and 1B FRV in MAN.

C. automatically shifts to 3-ELEMENT. When RPV water level is recovering, verify that DFWLC automatically shifts to SINGLE-ELEMENT. No further operator action is required.

D. automatically shifts to 3-ELEMENT. When RPV water level is recovering, verify that DFWLC automatically shifts to SINGLE-ELEMENT and manually place the 1A and 1B FRV in MAN.

Answer: C

Answer Explanation:

Answer: Verify that immediately following the Scram, DFWLC automatically shifts to 3-ELEMENT control and locks in the pre-Scram feedwater flow demand constant for 5 seconds. After 5 seconds, the flow demand decreases along the predetermined profile until reaching 15%. Upon reset of the Scram profile (rising to > 15" after initial drop to < 15" for given plant conditions), DFWLC automatically shifts to SINGLE-ELEMENT and ramps the level setpoint to 30". The LFFRV remains in AUTO and will open to control RPV level.

Distractor 1 is incorrect: Plausible if the candidate assumes that DFWLC remains in single-element control.

Distractor 2 is incorrect: Combination of distractor 2 and 3.
Distractor 3 is incorrect: Plausible because one method of placing the LFFRV in automatic control of RPV level is by taking both FRVs to manual. However, this choice is incorrect because the LFFRV will automatically function to control level (group control) since feedflow is less than the predetermined setpoint.

Reference: QOA 0010-05 Rev 24, QCAN 901(2)-5 E-6 Rev 3, QCOP 0600-21 Rev 15
Reference provided during examination: N/A

Cognitive level: High

Level (RO/SRO): RO
Tier: 1 Group: 1

Question Source: New
Question History: N/A

10 CFR Part 55 Content: 41.10

Comments: None

Associated objective(s):

SR-0600-K20 (Freq: LIC=B)
Given a Feedwater Level Control System operating mode and various plant conditions, EVALUATE the following Feedwater Level Control System indications/responses and DETERMINE if the indication/ response is expected and normal. (limit to normally available indications)

a. Feedwater flow
b. Steam flow
c. Reactor water level
d. Low-Flow FWRV demand signal and valve position
e. A/B FWRV demand signal and valve position
f. Feedwater Master Controller output signal and deviation meter
g. FWRV Lockout Reset lights
h. FWLC Operator Work Station (OWS)
   (1) Process Overview Display indications
   (2) Measuring Points Display indications
   (3) Trend Display indications
   (4) Interlock Display indications
   (5) Alarm/Event Lists indications
i. Condensate recirc FCV 3401 demand signal and valve position
j. FWLC hydraulic skid indications
   (1) Oil reservoir level and temperature
   (2) Accumulator pressure
   (3) System pressure
   (4) Pump 1 (2) pressure
   (5) FWLC valve cycle open / cycle close pressure
   (6) Nematron display lights

295016.2.1.20 Ability to interpret and execute procedure steps. (RO=4.6 / SRO=4.6)

7 **ID: QDC.ILT.15496** **Points: 1.00**

Unit 2 was at 100% power when a LOCA occurred in the Drywell resulting in Drywell pressure rising to 3.4 psig.

- Five (5) minutes after the Reactor scrammed, the Unit 2 Diesel Generator Cooling Water Pump (DGCWP) normal feed breaker tripped.

What is the impact of the DGCWP normal feed breaker trip?

The Unit 2...

A. EDG will trip immediately.

B. EDG will continue to run until the engine seizes.

C. DGCWP will automatically re-start on its alternate power supply.

D. EDG will trip when engine cooling water temperature reaches 200°F.

Answer: B

Answer Explanation:

Answer: When Drywell pressure reaches 2.5 psig, the Unit 2 EDG will auto-start. Since the Hot Engine trip (200°F) is bypassed, the Unit 2 EDG will continue to run until failure.

Distractor 1 is incorrect: The DGCWP trip inputs to the Control Room "Trouble" alarm and the local "Cooling Water Pump Fail" alarm.
Distractor 2 is incorrect: The Unit 2 DGCWP alternate power supply transfer must be perform manually.
Distractor 3 is incorrect: The Hot Engine trip is bypassed with an EDG auto-start signal.

Reference: QCOP 6600-02 Rev 28, QCAN 2251(2)-10 B-4 Rev 2, QCOA 6600-14 Rev 16
Reference provided during examination: N/A

Cognitive level: High

Level (RO/SRO): RO
Tier: 1 Group: 1

Question Source: New
Question History: N/A

10 CFR Part 55 Content: 41.8 to 41.10

Comments: None.

Associated objective(s):

SRN-6600-K24 (Freq: LIC=B NF=B)
Given an Emergency Diesel Generators operating mode and various plant conditions, PREDICT how each supported system will be impacted by the following Emergency Diesel Generators failures:
a. Loss of diesel cooling water pump
b. Loss of fuel oil transfer pump

295018.AK1.01 Effects on component/system operations. (RO=3.5 / SRO=3.6)

8 **ID: QDC.ILT.15476** **Points: 1.00**

What effect will a LOSS of Instrument Air have on Service Water system pressure?

System pressure will...

A. rise primarily due to temperature control valves (TCVs) failing closed.

B. lower primarily due to pump minimum flow valves failing open.

C. rise primarily due to the Fire diesels auto starting.

D. lower primarily due to temperature control valves (TCVs) failing open.

Answer: D

Answer Explanation:

Answer: Service Water Load TCVs fail open on loss of instrument air, lowering system pressure.

Distractor 1 is incorrect: Service water is the normal supply to the fire header, if pressure drops low enough the diesel fire pumps will start, pressurizing the fire header, but they will not affect the SW system do to installed check valves.
Distractor 2 is incorrect: Other minimum flow valves that fail open/closed will not affect Service Water system pressure.
Distractor 3 is incorrect: The level control valves for TBCCW, RBCCW, etc. (Service Water loads) fail closed.

Reference: QOA 4700-06 Rev 19.
Reference provided during examination: N/A

Cognitive level: High

Level (RO/SRO): RO
Tier: 2 Group: 1

Question Source: Quad ILT Bank (QDC.ILT.05102)
Question History: N/A

10 CFR Part 55 Content: 41.7

Comments: None.

Associated objective(s):

295019.AK2.02 Component cooling water. (RO=2.9 / SRO=3.0)

SR-3900-K22 (Freq: LIC=B)
Given a Service Water System operating mode and various plant conditions, PREDICT how service water system/plant parameters will respond to the following failures:
a. Loss of instrument air
b. Loss of 4160/480 vac power
c. Loss of service water pressure
d. Loss of 250 vdc power

9 **ID: QDC.ILT.15501** **Points: 1.00**

Unit 1 was in Mode 3 with the RHR Loop A of Shutdown Cooling (SDC) in service and ONLY the 1B Reactor Recirc pump running when the following occured:

- 1B Reactor Recirc pump tripped.
- Shutdown Cooling was lost.

Currently, Reactor water level is 30" and the DIFFERENCE between the bottom head coolant temperature and the RPV coolant temperature is 185°F.

Which of the following actions will reduce thermal stratification without the possibility of exceeding RPV metal heat-up rate limits?

(Consider each action separately.)

A. Start the 1A Reactor Recirc pump to establish forced circulation through the core.

B. Raise Reactor water level to 90" to 100", then perform a feed and bleed to maintain level constant.

C. Increase RWCU rejection and replace water inventory with the CRD system to maintain RPV water level at 30".

D. Increase RBCCW flow to maximum on RWCU system non-regenerative heat exchangers to increase heat removal from the Reactor vessel.

Answer: B

Answer Explanation:

Answer: Raising RPV water level to 95" will bring level to above the steam separators and establish a flowpath for natural circulation, reducing stratification.

Distractor 1 is incorrect: Plausible because establishing forced circulation will eliminate stratification. However, a prerequisite in QCOP 0202-02 limits the start of a Recirc pump to ≤ 145°F between bottom head and RPV coolant temperature to avoid violating the P/T limits of the vessel.
Distractor 2 is incorrect: Plausible because it is an action that will increase heat removal from the core which is required when SDC is lost. However, with level at 30", there is no path for natural circulation and increasing CRD flow will add cold water to the bottom of the vessel.
Distractor 3 is incorrect: Plausible because it is an action that will increase heat removal from the core which is required when SDC is lost. However, with level at 30", there is no path for natural circulation and increasing RBCCW flow will add colder water to the vessel which will collect in the bottom of the RPV.

Reference: QCOA 1000-02 Rev 15, QCOA 0202-05 Rev 14
Reference provided during examination: N/A

Cognitive level: High

Level (RO/SRO): RO

Tier: 1 Group: 1

Question Source: Quad ILT Bank (QDC.ILT.658715)
Question History: N/A

10 CFR Part 55 Content: 41.5

Comments: None

Associated objective(s):

SR-1000-K26 (Freq: LIC=B)
EVALUATE given key RHR/RHRSW parameter indications and/or responses depicting a system specific abnormality/failure and DETERMINE a course of action to correct or mitigate the following abnormal condition(s):
a. Failure of 1001-47, 50, 28A/B and/or 29A/B to open
b. Loss of 125vdc to RHR initiation and/or loop select logic
c. Abnormal RHR discharge header pressure
d. RHR system fails to start automatically
e. Inadvertent RHR system start
f. RHR minimum flow valve fails open or closed
g. ECCS suction strainer clogging

295021.AK3.01 Raising reactor water level (RO=3.3 / SRO=3.4)

10 **ID: QDC.ILT.15503** **Points: 1.00**

A core reload is in progress on Unit 1 and a fuel assembly is being lowered into the core near SRM 24.

Per QCFHP 0110-02, INADVERTENT CRITICALITY DURING FUEL MOVES, which of the following indications meets the definition of a criticality event in progress during the fuel move?

(Consider each indication SEPARATELY.)

(1) Rise and subsequent lowering of SRM 24 period as the bundle is being lowered.
(2) Sustained increase in SRM 24 count rate after the bundle is set.
(3) Multiple spikes in SRM 24 count rate after the bundle is set.

A. 2 ONLY

B. 1 and 2 ONLY

C. 2 and 3 ONLY

D. 1, 2 and 3

Answer: A

Answer Explanation:

Answer: True criticality is indicated by a sustained increase in count rate, over 15 to 20 seconds, of the SRM closest to the Fuel Assembly/Bundle.

Distractor 1 is incorrect: Plausible if candidate assumes that counts rising (not sustained) is an indication of inadvertent criticality.
Distractor 2 is incorrect: Plausible if candidate does not realize that this is the SRM response when masked by power supply spiking, welding, etc.
Distractor 3 is incorrect: Combination of distractor 1 and 2.

Reference: QCFHP 0110-02 Rev 4
Reference provided during examination: N/A

Cognitive level: Memory

Level (RO/SRO): RO
Tier: 1 Group: 1

Question Source: Modified from QDC.ILT.10072
Question History: N/A

10 CFR Part 55 Content: 41.7

Comments: None

Associated objective(s):

SRLF-805-K15 (Freq: LIC=B NF=B)
Given symptoms and indications depicting an abnormal/emergency condition during refueling operations, ANALYZE the indications and LOCATE the appropriate abnormal/emergency procedure.

295023.AA1.06 Neutron monitoring. (RO=3.3 / SRO=3.4)

11 **ID: QDC.ILT.15573** **Points: 1.00**

Unit 1 was at full power when one vacuum breaker failed to return to its normal position during Drywell to Torus Vacuum Breaker testing. An indication problem has been ruled out.

Complete the following statements:

- With the vacuum breaker out of its normal position, Downcomer Pipe water level will be __(1)__ than normal.
- If a DBA LOCA occurs in this condition, PEAK Drywell temperature will be __(2)__ the peak drywell temperature during a DBA LOCA with all vacuum breakers in their normal position.

A. (1) lower
(2) higher than

B. (1) higher
(2) the same as

C. (1) higher
(2) higher than

D. (1) lower
(2) the same as

Answer: C

Answer Explanation:

Answer: The loss of Drywell to Torus d/p will cause the water to rise up into the downcomers. A failed open Drywell to Torus vacuum breaker also reduces the pressure suppression function of the containment. The drywell will peak at a higher pressure than if the vacuum breaker is closed, because some steam will bypass the suppression pool and enter the Torus airspace. Since peak drywell pressure will be higher, peak drywell temperature will be higher (saturation properties of steam)

Distractor 1 is incorrect: Plausible if the candidate determines that Torus pressure is maintained higher than Drywell pressure.
Distractor 2 is incorrect: Plausible if the candidate does not establish that the position of the vacuum breaker is open and that direct communication exists between the Drywell and Torus airspace.
Distractor 3 is incorrect: Combination of distractor 1 and 2.

Reference: LNF-1601 Rev 8
Reference provided during examination: N/A

Cognitive level: High

Level (RO/SRO): RO
Tier: 1 Group: 1

Question Source: Modified from Quad ILT Bank (QDC.06-01 CERT RO 11)
Question History: N/A

10 CFR Part 55 Content: 41.10

Comments: None.

Associated objective(s):

SRN-1601-K22 (Freq: LIC=B NF=B)
Given a Containment Systems operating mode and various plant conditions, PREDICT how reactor and containment parameters will respond to the following failures:
a. DBA LOCA
b. Small leak inside or outside the drywell
c. Large steam break inside or outside the drywell

295024.EA2.02 Drywell temperature (RO=3.9 / SRO=4.0)

12 **ID: QDC.ILT.15577** **Points: 1.00**

Unit 1 was operating at rated power when an inadvertent Group 1 Isolation and a hydraulic ATWS occurred.

The following conditions exist:
- The Manual Scram Pushbuttons have been depressed and the Reactor Mode Switch has been taken to SHUTDOWN.
- The Unit Supervisor has announced entry into QGA 101.
- Relief valves are cycling.

Which of the following actions, if any, may be taken WITHOUT concurrence of the Unit Supervisor?

Action 1: Inhibit ADS
Action 2: Run both Recirc pumps to minimum speed

A. NEITHER Action 1 nor Action 2 may be taken.

B. Action 1 but NOT Action 2 may be taken.

C. Action 2 but NOT Action 1 may be taken.

D. BOTH Action 1 and Action 2 may be taken.

Answer: C

Answer Explanation:

Answer: OP-QC-103-102-1002 specifies which ATWS actions should be taken even if the Unit supervisor has not ordered it yet, (an immediate action). Both Action 1 and Action 2 are related to controlling RPV Pressure during an ATWS but only "run both Recirc Pumps to minimum" is allowed without concurrence of the US.

Distractor 1 is incorrect: Action 1 is listed as an action that should be taken even without prior US concurrence.
Distractor 2 and 3 are incorrect: Action 2 is explicitly NOT allowed per OP-QC-103-102-1002.

Reference: OP-QC-103-102-1002 Rev 1
Reference provided during examination: N/A

Cognitive level: Memory

Level (RO/SRO): RO
Tier: 1 Group: 1

Question Source: New
Question History: N/A

10 CFR Part 55 Content: 41.10

Comments: None

Associated objective(s):

295025.2.4.01 Knowledge of EOP entry conditions and immediate action steps. (RO=4.6 / SRO=4.8)

SRNLF-00-K10 (Freq: LIC=I NF=I)
STATE the administrative requirements which, by their nature, must be memorized (for example - color coding of control switches).

13 **ID: QDC.ILT.15507** **Points: 1.00**

Compared to its normal heat capacity, the ability of the Torus Suppression Pool to condense steam during a DBA LOCA is reduced by which of the following initial conditions?

A. Torus water level of 15 ft.

B. Drywell pressure of 2.7 psig

C. Torus water temperature of 102°F

D. Stuck closed Rx Bldg-to-Torus Vacuum Breaker

Answer: C

Answer Explanation:

Answer: Torus temperature of 102°F is above normal (must maintain < 95°F normally). If initial Torus temperature is high, the Torus suppression capability (condensing steam) is reduced because the energy content of the Torus is higher.

Distractor 1 is incorrect: High Torus water level could result in excessive clearing loads and pool swells during a DBA LOCA.
Distractor 2 is incorrect: A high initial drywell pressure will result in a higher drywell pressure during a DBA LOCA.
Distractor 3 is incorrect: Plausible because this would be the correct answer if the vacuum breaker was stuck open.

Reference: L-QGA200 Rev 6, TS LCO 3.6.2.1 Amendment 199/195
Reference provided during examination: N/A

Cognitive level: Memory

Level (RO/SRO): RO
Tier: 1 Group: 1

Question Source: Quad ILT Bank (QDC.ILT.658115)
Question History: N/A

10 CFR Part 55 Content: 41.8 to 41.10

Comments: None.

Associated objective(s):

295026.EK1.02 Steam condensation. (RO=3.5 / SRO=3.8)

SR-1601-K28 (Freq: LIC=B)
EXPLAIN the reasons for given Containment Systems operating limits and precautions.
a. Torus temperature limits (95/110/160)
b. Torus level limits (+2/-2 adjusted for dp)
c. Drywell/torus differential pressure limitations
d. Drywell Spray Initiation Limit
e. Primary Containment Pressure Limit
f. Pressure Suppression Limit
g. Heat Capacity Limit

14 **ID: QDC.ILT.15534** **Points: 1.00**

Which one of the following describes the consequences of spraying the Drywell when Drywell temperature is ABOVE the Drywell temperature limit of the Drywell Spray Initiation Limit Curve?

A. External pressure limits on the Secondary Containment would be exceeded.

B. Automatic Depressurization System instruments would NO longer be qualified for these conditions.

C. RPV water level instrumentation would become inaccurate due to rapidly lowering temperatures.

D. The Torus-to-Drywell and Reactor Building-to-Suppression Chamber vacuum breakers would open, deinerting the Containment.

Answer: D

Answer Explanation:

Answer: If unrestricted, the evaporative cooling affect of drywell spray could result in an immediate, rapid and large reduction in drywell pressure. This will cause the containment vacuum breakers to open, allowing oxygen to enter the containment.

Distractor 1 is incorrect: The limit of concern is on the Primary Containment.
Distractor 2 is incorrect: There is no relationship between the DSIL Curve and ADS.
Distractor 3 is incorrect: Inaccurate level indication may occur when Drywell temperature exceeds the saturation temperature for the existing RPV pressure, since Drywell sprays lower Drywell temperature they will have the opposite affect.

Reference: L-QGADET Rev 7
Reference provided during examination: N/A

Cognitive level: Memory

Level (RO/SRO): RO
Tier: 1 Group: 1

Question Source: Hope Creek ILT Bank (Q53337)
Question History: 2009 Hope Creek ILT NRC Exam

10 CFR Part 55 Content: 41.7

Comments: None

Associated objective(s):

SR-0001-K09 (Freq: LIC=B)
DESCRIBE the purpose of the following QGA curves/tables:
a. QGA Detail A, RPV Water Level Instruments
   1. Figure B, RPV Saturation Curve
   2. Table C, RPV Level Instrument Criteria
b. QGA Figure D, Primary Containment Pressure Limit
c. QGA Detail E, Alternate Injection Systems
d. QGA Detail F, Injection Subsystems
e. QGA Detail G, Preferred ATWS Systems
f. QGA Detail H, Alternate ATWS Systems
g. QGA Table J, Minimum Steam Cooling Pressure
h. QGA Figure K, Drywell Spray Initiation Limit
i. QGA Figure L, Pressure Suppression Pressure
j. QGA Figure M, Heat Capacity Limit
k. QGA Detail O, Emergency Depressurization Systems
l. QGA Detail P, RPV Injection Sources
m. QGA Detail Q, Alternate Flooding Systems
n. QGA Table S, Reactor Building Area Temperatures
o. QGA Table T, Reactor Building Area Radiation Levels
p. QGA Table U, Reactor Building Area Water Levels
q. QCAP 0200-10 Attachments S,T,U,V and W, RHR and CS NPSH Curves
r. QCAP 0200-10 Attachment X, HPCI NPSH Curves
s. QCAP 0200-10 Attachment Y, RCIC NPSH Curves
t. QCAP 0200-10 Attachment Z, ECCS Vortex Limit
u. Cold Shutdown Boron
v. Hot Shutdown Boron
w. Maximum Subcritical Banked Withdrawal Position
x. Minimum Number Of SRVs Required For Emergency Depressurization
y. Minimum Number Of ADS Valves For Decay Heat Removal
z. Decay Heat Removal Pressure
aa. Minimum Steam Cooling RPV Water Level
ab. Minimum Zero-Injection RPV Water Level

295028.EK2.01 Drywell spray: Mark-I&II (RO=3.7 / SRO=4.1)

15 **ID: QDC.ILT.15508** **Points: 1.00**

Which of the following curves provides operational guidance to prevent reduction in ECCS pump capacity due to air entrainment during transient conditions?

A. RHR NPSH Limit

B. ECCS Vortex Limit

C. Heat Capacity Limit

D. Pressure Suppression Pressure

Answer: B

Answer Explanation:

Answer: The Vortex limit is the lowest Torus water level at which air entrainment is not expected to occur. High air volumes at the pump suction can noticeably reduce pump capacity.

Distractor 1 is incorrect: This limit precludes pump damage due to low NPSH
Distractor 2 is incorrect: This limit precludes Torus temperature and/or pressure from exceeding design limits.
Distractor 3 is incorrect: This limit ensures the pressure suppression function of the containment is maintained.

Reference: L-QGADET Rev 7
Reference provided during examination: N/A

Cognitive level: Memory

Level (RO/SRO): RO
Tier: 1 Group: 1

Question Source: Monticello ILT Bank (M8100Q-0505)
Question History: Monticello 2005 ILT NRC Exam

10 CFR Part 55 Content: 41.8 to 41.10

Comments: None

Associated objective(s):

SR-0001-K09 (Freq: LIC=B)
DESCRIBE the purpose of the following QGA curves/tables:
a. QGA Detail A, RPV Water Level Instruments
   1. Figure B, RPV Saturation Curve
   2. Table C, RPV Level Instrument Criteria
b. QGA Figure D, Primary Containment Pressure Limit
c. QGA Detail E, Alternate Injection Systems
d. QGA Detail F, Injection Subsystems
e. QGA Detail G, Preferred ATWS Systems
f. QGA Detail H, Alternate ATWS Systems
g. QGA Table J, Minimum Steam Cooling Pressure
h. QGA Figure K, Drywell Spray Initiation Limit
i. QGA Figure L, Pressure Suppression Pressure
j. QGA Figure M, Heat Capacity Limit
k. QGA Detail O, Emergency Depressurization Systems
l. QGA Detail P, RPV Injection Sources
m. QGA Detail Q, Alternate Flooding Systems
n. QGA Table S, Reactor Building Area Temperatures
o. QGA Table T, Reactor Building Area Radiation Levels
p. QGA Table U, Reactor Building Area Water Levels
q. QCAP 0200-10 Attachments S,T,U,V and W, RHR and CS NPSH Curves
r. QCAP 0200-10 Attachment X, HPCI NPSH Curves
s. QCAP 0200-10 Attachment Y, RCIC NPSH Curves
t. QCAP 0200-10 Attachment Z, ECCS Vortex Limit
u. Cold Shutdown Boron
v. Hot Shutdown Boron
w. Maximum Subcritical Banked Withdrawal Position
x. Minimum Number Of SRVs Required For Emergency Depressurization
y. Minimum Number Of ADS Valves For Decay Heat Removal
z. Decay Heat Removal Pressure
aa. Minimum Steam Cooling RPV Water Level
ab. Minimum Zero-Injection RPV Water Level

295030.EK1.02 Pump NPSH (RO=3.5 / SRO=3.8)

16 **ID: QDC.ILT.15511** **Points: 1.00**

Five (5) minutes ago, Unit 1 experienced a transient resulting in the following plant conditions:

- RPV water level is -65 inches and lowering at 10 inches per minute
- RPV pressure is 230 psig and lowering at 5 psig per minute.
- Drywell pressure is 1.5 psig and stable.
- The "B" Loop Recirc Pump Discharge Valve, 1-202-5B, has automatically CLOSED.

Which of the following correctly describes the expected status of Low Pressure Coolant Injection?

A. NO RHR Pumps are running.

B. All four RHR Pumps are running but NOT injecting into the RPV.

C. All four RHR Pumps are running and injecting into the A Recirc Loop.

D. All four RHR Pumps are running and injecting into the B Recirc Loop.

Answer: D

Answer Explanation:

Answer: 1-202-5B being closed indicates that the B Recirc Loop has been selected. With RPV level < -59" and RPV pressure <325 psig, the RHR Pumps will auto start. With RPV pressure at 230 psig, RHR Pumps will be injecting.

Distractor 1 is incorrect: Selected if candidate believes RPV level <-59" also needs either DW pressure >2.5 psig or an 8.5 minute timer timed out. Also selected if the low pressure permissive is thought to be 225 psig rather than 325 psig
Distractor 2 is incorrect: Possible misconceptions about 1-202-5B being closed, RPV pressure being at 230 psig, or how an initiation signal affects LPCI pumps.
Distractor 3 is incorrect: Possible misconception that 1-202-5B being closed means the opposite loop has been selected.

Reference: QCOA 1000-04 Rev 14, QCAN 901(2)-3 H-15 Rev 7
Reference provided during examination: N/A

Cognitive level: High

Level (RO/SRO): RO
Tier: 1 Group: 1

Question Source: Quad ILT Bank (QDC.ILT.627557)
Question History: N/A

10 CFR Part 55 Content: 41.7

Comments: None

Associated objective(s):

SR-1000-K08 (Freq: LIC=B)
DESCRIBE how RHR/RHRSW and related plant systems respond to a LPCI auto initiation signal with and without normal power available.

295031.EK2.05 Low pressure coolant injection (RHR) (RO=4.2 / SRO=4.3)

17 **ID: QDC.ILT.15512** **Points: 1.00**

The following conditions exist on Unit 1 following a transient:

- Reactor power is stabilized at 12% following the Reactor SCRAM.
- RPV water level is -20 inches and lowering.
- MSIVs are open.

In this situation, the EOPs direct operators to bypass the following isolations per QCOP 0250-02, Bypassing MSIV Group 1 Isolation Signal From Low Low Reactor Water Level:

- Low RPV water level MSIV isolation
- High radiation Offgas isolation

Which of the following describes the REASON this is done?

A. Avoid adding heat to the Suppression Pool.

B. Facilitate an immediate 100°F/hr Reactor plant cooldown.

C. Prevent the requirement of Standby Liquid Control (SBLC) injection.

D. Maintain Turbine Bypass Valves available for Anticipating Blowdown.

Answer: A

Answer Explanation:

Answer: The isolations are bypassed to maintain the Main Condenser as a heat sink even if fuel failure has occured. This prevents adding heat to the suppression pool and challenging the containment.

Distractor 1 is incorrect: Plausible if the candidate does not remember that reactor pressure is held constant during an ATWS (until cold shutdown boron weight is injected or power is less than IRM Range 7 with no boron injected).
Distractor 2 is incorrect: Plausible if candidate assumes that since heat is dissipated outside of the containment, boron does not need to be injected.
Distractor 3 is incorrect: Plausible if candidate assumes that anticipating blowdown is an option when in the pressure leg of QGA 101.

Reference: QCOP 0250-02 Rev 11, L-QGA101 Rev 7
Reference provided during examination: N/A

Cognitive level: Memory

Level (RO/SRO): RO
Tier: 1 Group: 1

Question Source: Grand Gulf ILT Bank (GGNS-NRC-00850)
Question History: Grand Gulf 2005 ILT NRC Exam

10 CFR Part 55 Content: 41.5

Comments: None

Associated objective(s):

295037.EK3.06 Maintaining heat sinks external to the containment (RO=3.8 / SRO=4.1)

SR-0001-K61 (Freq: LIC=B)
Given QGA 101, 'RPV Control (ATWS)', EXPLAIN the reasons for the actions.

18 **ID: QDC.ILT.15536** **Points: 1.00**

Unit 1 was at power when a transient occurred resulting in the Primary Containment being vented through the Standby Gas Treatment (SBGT) system.

The Unit Supervisor is currently performing Emergency Plan Classification duties and needs a NSO to report wind speed and direction related to this event.

Complete the following statements:

- Wind speed and direction can be obtained using the __(1)__.
- Meteorological data associated with the __(2)__ release point must be reported if SBGT is the source of the effluent release.

A. (1) Plant Parameter Display System (PPDS)
(2) Main Chimney

B. (1) Safety Parameter Display System (SPDS)
(2) Main Chimney

C. (1) Plant Parameter Display System (PPDS)
(2) Reactor Building Vent Stack

D. (1) Safety Parameter Display System (SPDS)
(2) Reactor Building Vent Stack

Answer: A

Answer Explanation:

Answer: PPDS displays offsite release rates and wind speed/direction. Since SBGT discharges to the Main Chimney, meteorological data must be taken from the Elevated Level.

Distractor 1 is incorrect: The SPDS displays radiation release data, not meteorological data.
Distractor 2 is incorrect: Plausible if the candidate assumes that SBGT discharges to the Reactor Building Vent Stack. If this was true, the candidate would select "ground release" point which may be non-conservative to the actual release data.
Distractor 3 is incorrect: Combination of Distractor 1 and 2.

Reference: QOP 9900-102 Rev 14, LIC-1702 Rev 8, EP-MW-114-100 Rev 8, EP-MW-114-100-F-01 Rev D
Reference provided during examination: N/A

Cognitive level: Memory

Level (RO/SRO): RO
Tier: 1 Group: 1

Question Source: New
Question History: N/A

10 CFR Part 55 Content: 41.7

Comments: None

Associated objective(s):

295038.EA1.02 Meteorological instrumentation (RO=3.0 / SRO=3.8)

SR-1702-K01 (Freq: LIC=B) STATE the purpose(s) of the following Chimney/Stack Radiation Monitoring System including applicable design bases.

a. Chimney Gas Radiation Monitor
b. Eberline SPING
   (1) Main Chimney Low/Mid/High Range Noble Gas
   (2) RB vent
c. RB and TB vent CAMS
d. PPDS and DAPAR

19 **ID: QDC.ILT.15531** **Points: 1.00**

(A reference is provided for this question.)

A FAS alarm is received in the Control Room.

- FAS Terminal Display indicates FAS Device "43-28" in alarm.

An EO is dispatched and reports from the local protectowire panel:

- Zone 1 alarm and the footage meter reads 580.

Where is the potential fire?

A. 1A Core Spray Room

B. 1B Core Spray Room

C. 2A Core Spray Room

D. 2B Core Spray Room

Answer: B

Answer Explanation:

Answer: Attachment A shows that FAS device 43-28 is associated with Unit 1 RB 554' South (local panel 2201-81). Zone 1 (footage 476-637) on Attachment V associates footage with the 1B Core Spray Room ceiling.

Distractor 1, 2 and 3 are incorrect: Plausible because the student can use the footage reading on the incorrect Zone.
Distractor 2 is incorrect: Combination of distractor 1 and 3
Distractor 3 is incorrect: Plausible because the student can use the footage reading on the incorrect Unit.

Reference: QCOA 4100-11 Rev 20
Reference provided during examination: QCOA 4100-11 Rev 20 (all)

Cognitive level: High

Level (RO/SRO): RO
Tier: 1 Group: 1

Question Source: Quad ILT Bank (QDC.ILT.65837)
Question History: N/A

10 CFR Part 55 Content: 41.10

Comments: None

Associated objective(s):

600000.AA2.03 Fire alarm (RO=2.8 / SRO=3.2)

SR-4100-K06 (Freq: LIC=I)
Given a Fire Protection Systems annunciator tile inscription OR local panel alarm/trouble light label, DESCRIBE the condition causing the alarm and any automatic actions which occur when the alarm actuates. EXPLAIN the consequences of the condition if not corrected.

20 **ID: QDC.ILT.15574** **Points: 1.00**

Unit 1 was at 100% power when a Loss of Coolant Accident (LOCA) occurred.

QGA 100, RPV Control and QGA 200, Primary Containment Control are being executed. The following conditions exist:

- RPV water level is -72" and steady.
- Drywell pressure is 13 psig and slowly rising.
- ALL available low pressure ECCS pumps are injecting into the RPV.
- 901-8 E-5, 4KV BUS 13-1 VOLTAGE DEGRADED has been in ALARM for two (2) minutes.
- 901-8 G-12, 4KV BUS 14-1 VOLTAGE DEGRADED has been in ALARM for two (2) minutes.
- Bus 13-1 and 14-1 voltage is 3620 VAC.

Given the above plant conditions and in accordance with plant procedures, which of the following actions must be taken to restore voltage on Bus 13-1 and 14-1?

A. SECURE running ECCS pumps as needed.

B. Place RAT (T-12) Load Tap Changer (LTC) in MANUAL and raise tap setting.

C. PARALLEL each Diesel Generator to its ECCS bus and raise bus voltage.

D. OPEN Bus 13 to 13-1 and 14 to 14-1 Tie GCBs. Verify that the EDGs load to their ECCS bus.

Answer: D

Answer Explanation:

Answer: If 901(2)-8 E-5 (G-4) is in alarm and Drywell pressure is $\geq$ 2.5 psig or RPV level is $\leq$ -59", the feed breaker to Bus 13-1(14-1) will open and the respective EDG will load onto the ECCS bus. This must be verified by the operator. Since the designed ECCS bus trip failed, operator action must be taken to open the feed breakers. QCOA 6500-13, Failure of Division 2 Degraded Voltage Relay Protection Concurrent with a LOCA, also directs the same action to be taken immediately.

Distractor 1 is incorrect: Since a LOCA is in progress, low pressure ECCS pumps are required for level control.
Distractor 2 is incorrect: Placing the LTC in manual is an action specified in the annunciator procedure, but not appropriate because the feed breakers to Bus 13-1 (14-1) should have already tripped.
Distractor 3 is incorrect: Paralleling the EDG to Bus 13-1 (14-1) is not appropriate because it would require placing the EDG in DROOP control and the EDG will be unable to raise offsite voltage when paralleled.

Reference: QOA 900-8 E-5 (G-12) Rev 5 (9), QOA 6500-08 Rev 12, QCOA 6500-13 Rev 7, OP-AA-101-111 Rev 4
Reference provided during examination: N/A

Cognitive level: High

Level (RO/SRO): RO
Tier: 1 Group: 1

Question Source: Modified from Vermont Yankee Bank# 205
Question History: Draft Version on 2009 Vermont Yankee ILT NRC Exam

10 CFR Part 55 Content: 41.10

Comments: None

Associated objective(s):

SR-6500-K26 (Freq: LIC=B) EVALUATE given key 4KV / 480 VAC Distribution Systems parameter indications and/or responses depicting a system specific abnormality/failure and DETERMINE a course of action to correct or mitigate the following abnormal condition(s):
a. Loss of T11or T12 (T21 or T22) cooling (include calculations for determining MVA and maximum current to buses supplied by the transformer)

700000.2.4.08 Knowledge of how abnormal operating procedures are used in conjunction with EOPs. (RO=3.8 / SRO=4.5)

21 **ID: QDC.ILT.15538** **Points: 1.00**

Unit 2 was at 100% power when an ATWS occured requiring a RPV Blowdown per QGA 500-1. Following the blowdown, Reactor water level was 30" and steady, being maintained by one Reactor Feed Pump (RFP).

A short time later, QGA 500-4, RPV Flooding, was entered due to ALL Reactor level instrumentation drifting FULLY UPSCALE.

The Unit Supervisor has ordered the NSO to raise injection, using the Condensate/Feedwater system, to establish and hold the following conditions:

- At least 2 ADS valves open,
  AND
- RPV pressure above 601 psig, but as low as possible.

Using the Condensate/Feedwater system, which of the following actions must be performed to establish and hold the conditions listed above?

A. Slowly inject into the Reactor with the RFP that is currently running.

B. Slowly inject into the Reactor with the Condensate pumps that are currently running.

C. Bypass a RFP high Reactor water level trip at Bus 21 or 22, start the associated RFP and slowly inject into the Reactor.

D. Bypass the RFP high Reactor water level trips in the Control Room, start any RFP and slowly inject into the Reactor.

Answer: C

Answer Explanation:

Answer: A RFP must be used to maintain 601 psig and since indicated level is upscale (>48"), the high RPV level trips must be bypassed at Bus 21 or 22. The Condensate pumps will already be running because there is not a high level trip.

Distractor 1 is incorrect: The 1A RFP will trip on high RPV level (indicated) regardless if actual RPV level is less than +48".
Distractor 2 is incorrect: Condensate pumps will start with a high RPV level, but cannot reach 601 psig discharge pressure.
Distractor 3 is incorrect: Many other QGA jumper procedures are performed in the Control Room, but not the RFP high level trip bypass.

Reference: QGA 500-4 Rev 12, QCOP 3200-10 Rev 4, QCAN 901(2)-6 F-7 Rev 11
Reference provided during examination: N/A

Cognitive level: High

Level (RO/SRO): RO
Tier: 1 Group: 2

Question Source: New

Question History: N/A

10 CFR Part 55 Content:

Comments: None

Associated objective(s):

295008.AA1.08 Feedwater system (RO=3.5 / SRO=3.5)

SR-0600-K26 (Freq: LIC=B)
EVALUATE given key Feedwater Level Control System parameter indications and/or responses depicting a system specific abnormality/failure and DETERMINE a course of action to correct or mitigate the following abnormal condition(s):

a. Feedflow sensor fails high/low
b. Steam flow sensor fails high/low
c. RPV level sensor fails high/low
d. Reactor level SMS value error
e. RFP suction pressure SMS value error
f. Steam flow SMS value error
g. Feedflow error with calculated feedwater flow activated
h. Loss of 480vac
i. Loss of Essential Service or Instrument Bus power
j. Loss of instrument air
k. FWLC Hydraulic Skid failures:
   (1) Pump trip
   (2) Loss of FWLC position feedback
   (3) Oil leak
   (4) Tracking error

22 **ID: QDC.ILT.15541** **Points: 1.00**

Unit 1 is at 70% power when LT 1-0263-23A (ATWS LEVEL TRANSMITTER, ECCS CH. A) slowly fails upscale. DFWLC is in SINGLE-ELEMENT throughout the transient.

Which of the following vertical traces, as viewed on UR 1-0640-26 (TURB STM FLOW, RX LVL AND FW FLOW), establishes the CURRENT Reactor water level TREND as RISING?

(The following traces show feed flow and steam flow ONLY. Assume steam flow remains CONSTANT throughout the transient.)

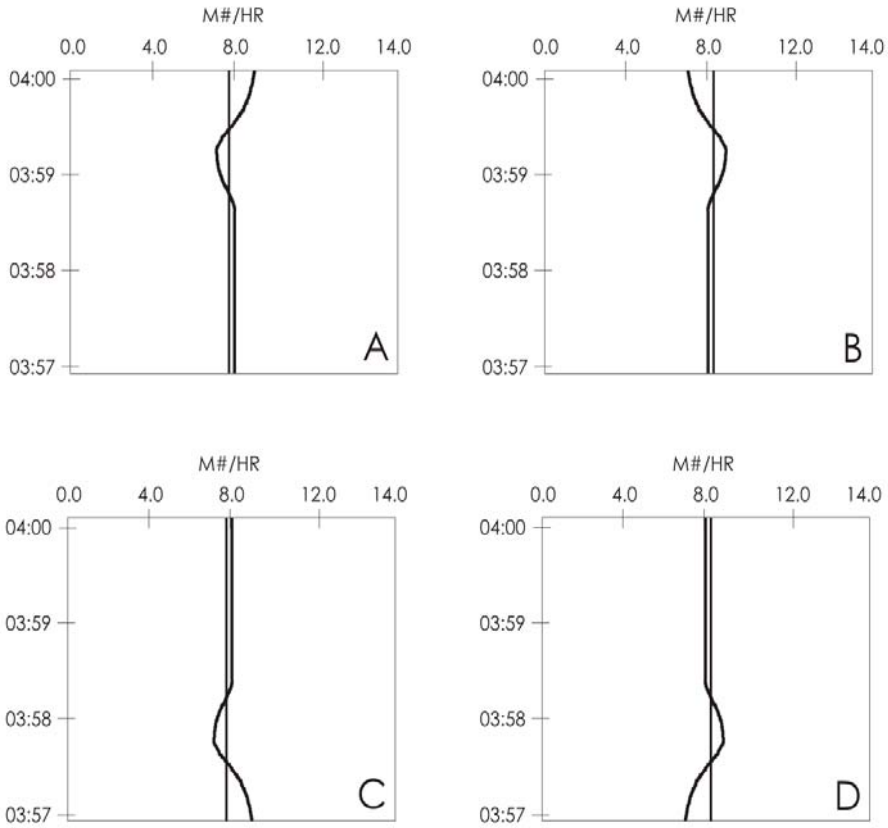

A. A

B. B

C. C

D. D

Answer: A

Answer Explanation:

Answer: A level transmitter (inputting to DFWLC) failing upscale will cause the FRVs to close and Reactor water level to lower. The UR 1-640-26 is a Yokogawa DX100 recorder that shows a vertical trend. The current conditions appear at the top of the trace and the parameter value increases from the left to the right. To establish a rising water level trend, steam flow must be less than feed flow. Therefore, trace A shows a current trend of rising RPV level.

Distractor 1 is incorrect: Steam flow is greater than feed flow, therefore showing a current trend of lowering RPV level.
Distractor 2 is incorrect: Current trend is at the top of the recorder, therefore RPV level is steady.
Distractor 3 is incorrect: Current trend is at the top of the recorder, therefore RPV level is steady. (Note: Since CRD flow is also adding to the RPV, steam flow and feed flow will not be exactly the same. Therefore feedflow will be slightly lower than steam flow even though RPV water level is constant. If DFWLC is in single-element and feedflow is constant, RPV level must be constant at 30".)

Reference: Picture of UR 1-640-26 vertical trend
Reference provided during examination: N/A

Cognitive level: High

Level (RO/SRO): RO
Tier: 1 Group: 2

Question Source: New
Question History: N/A

10 CFR Part 55 Content: 41.10

Comments: None

Associated objective(s):

295009.AA2.02 Steam flow/feed flow mismatch (RO=3.6 / SRO=3.7)

SR-0600-K20 (Freq: LIC=B)
Given a Feedwater Level Control System operating mode and various plant conditions, EVALUATE the following Feedwater Level Control System indications/responses and DETERMINE if the indication/ response is expected and normal. (limit to normally available indications)

a. Feedwater flow
b. Steam flow
c. Reactor water level
d. Low-Flow FWRV demand signal and valve position
e. A/B FWRV demand signal and valve position
f. Feedwater Master Controller output signal and deviation meter
g. FWRV Lockout Reset lights
h. FWLC Operator Work Station (OWS)
   (1) Process Overview Display indications
   (2) Measuring Points Display indications
   (3) Trend Display indications
   (4) Interlock Display indications
   (5) Alarm/Event Lists indications
i. Condensate recirc FCV 3401 demand signal and valve position
j. FWLC hydraulic skid indications
   (1) Oil reservoir level and temperature
   (2) Accumulator pressure
   (3) System pressure
   (4) Pump 1 (2) pressure
   (5) FWLC valve cycle open / cycle close pressure
   (6) Nematron display lights

23 **ID: QDC.ILT.15542** **Points: 1.00**

Unit 2 was at 100% power when an accident occurred requiring the evacuation of the Control Room.

Torus water temperature is 91°F and QCOP 1000-07, Torus Cooling With The Control Room Inaccessible, has been entered.

To start the 2B RHRSW pump locally, the feed breaker at ...

A. Bus 23 is closed using the local control SWITCH.

B. Bus 24 is closed using the local control SWITCH.

C. Bus 23 is closed using a local control BOX (PIGTAIL).

D. Bus 24 is closed using a local control BOX (PIGTAIL).

Answer: C

Answer Explanation:

Answer: The 2B RHRSW pump is powered from Bus 23 and is locally closed in this situation using the local control box.

Distractor 1 is incorrect: The local control switch is only functional when the breaker is racked to the TEST position.
Distractor 2 is incorrect: Combination of distractor 1 and 3.
Distractor 3 is incorrect: The 1C and 1D RHRSW pumps are powered from Bus 24.

Reference: QCOP 1000-07 Rev 12, QOP 6500-10 Rev 10
Reference provided during examination: N/A

Cognitive level: Memory

Level (RO/SRO): RO
Tier: 1 Group: 2

Question Source: New
Question History: N/A

10 CFR Part 55 Content: 41.7

Comments: None

Associated objective(s):

295013.2.1.30 Ability to locate and operate components, including local controls. (RO=4.4 / SRO=4.0)

SRN-6500-K16 (Freq: LIC=B NF=B) STATE the physical location and DESCRIBE the operation of the following 4KV / 480 VAC Distribution Systems local controls:

a. Transformer 11 control panels
   (1) CS-1 Fan Bank 1 control switch
   (2) CS-2 Second Stage Cooling control switch
   (3) Stage of Cooling control switch (43)
   (4) Cooling fan breaker pushbuttons
   (5) Trouble alarm test switches
   (6) Sudden pressure relay cutout switch (on/off)
   (7) T11 lockout relay reset switch
b. Transformer 21control panels
   (1) T21 Fan Bank 1 and 2 control switches and oil pumps control switch
   (3) Cooling fan and pump breakers
   (4) Trouble alarm test switches
   (5) Sudden pressure relay cutout switch (on/off)
   (6) T21 lockout relay reset switch
c. Transformer control cabinets (Aux electric room)
   (1) T12 / T22 lockout relay reset switch
   (2) T11/12/21/22 deluge reset pushbuttons
d. 4KV Buses (local)
   (1) T12 (T22) UV relay reset pushbuttons on bus 12 and 14 (22 and 24)
   (2) Bus 13-1,14-1 (23-1,24-1) second level undervoltage relay reset pushbuttons
   (3) Bus 13,14 (23,24) test switches (inhibit DG start)
e. 4KV breakers (local)
   (1) Control switch (switch or pushbuttons)
   (2) Test selector switch
   (3) 4KV breaker isolation/test switches
   (4) 4KV breaker 86 device reset switch
   (5) Charging motor cutout switch
   (6) Foot pedal
   (7) Local control box (pigtail)
   (8) Bus 31 4KV grounding device knife switches
   (9) Vertical breaker racking direction selector switch and engage/start racking motor handle
f. 480 VAC breakers (local)
   (1) Control switch (switch handle or pushbuttons)
   (2) 480 VAC circuit breaker isolation/test switches
   (3) 480 VAC MCC breaker thermal reset
   (4) Local control box (pigtail)
g. Transformer 12/22 control panels
   (1) Lead cooler sequence switch
   (2) Auto mode enable test switch
   (3) Cooling fan breakers
   (4) LTC Raise/off/lower switch (43T-1)
   (5) LTC Mode local/remote switch (43T-2)
   (6) LTC Manual/off/auto switch (43T-3)
   (7) Sudden pressure relay cutout switch (63 CO)
   (8) Sudden pressure relay LTC and main tank off/enable switches
   (9) Lockout relay reset switch (cooling control)
   (10) Trouble alarm test switches

24 **ID: QDC.ILT.15510** **Points: 1.00**

A plant transient has occurred which has resulted in fuel element failure. Drywell pressure has increased to the point that Primary Containment venting is required.

Which of the following methods of venting will have the LOWEST radioactive release to the public?

A. 2" Torus Vent

B. 2" Drywell Vent

C. 18" Torus Hardened Vent

D. 18" Drywell Hardened Vent

Answer: A

Answer Explanation:

Answer: Venting through the Torus is the preferred method of venting the containment post-accident. A decontamination factor up to four is provided when vented gases are required to bubble through water first.

Distractor 1 is incorrect: Plausible if the candidate does not apply the scrubbing action of the Torus pool.
Distractor 2 is incorrect: Plausible if the candidate does not realize that the 18" Hardened Vent is unfiltered.
Distractor 3 is incorrect: Combination of Distractor 1 and 2

Reference: QCOP 1600-13 Rev 22
Reference provided during examination: N/A

Cognitive level: High

Level (RO/SRO): RO
Tier: 1 Group: 2

Question Source: Quad ILT Bank (QDC.06-01 CERT RO 24)
Question History: N/A

10 CFR Part 55 Content: 41.8 to 41.10

Comments: None

Associated objective(s):

295017.AK1.02 Protection of the general public (RO=3.8 / SRO=4.3)

SR-1602-K20 (Freq: LIC=B)
Given a Primary Containment Atmosphere Control Systems operating mode and various plant conditions, EVALUATE the following Primary Containment Atmosphere Control Systems indications/responses and DETERMINE if the indication/ response is expected and normal.

a. Control Room
   (1) DW cooler and booster fan status lights
   (2) Drywell/torus purge fan status lights
   (3) Nitrogen Purge (Inerting) /Makeup
      (a) Makeup flow rate
      (b) Purge flowrate
   (4) Drywell/torus differential pressure control system (Pumpback)
      (a) Drywell/torus differential pressure
      (b) Joy compressor status lights
   (5) Primary containment vent valve positions
   (6) Primary containment hardened vent valve positions
   (7) Primary Containment Oxygen Analyzer
      (a) Drywell/torus O2 concentrations
      (b) Sample point lights
b. Local
   (1) DW/torus purge fans
      (a) Filter differential pressures
      (b) Inlet/outlet damper positions
   (2) Nitrogen Purge (Inerting) /Makeup
      (a) N2 storage tank level and pressure
      (b) Electric vaporizer outlet temperature, flow and pressure
      (c) N2 makeup pressure (1(2)-1641-29)
      (d) N2 purge supply temperature (TI-1/2-8471-8200)
   (3) Drywell/torus differential pressure control system (Pumpback)
      (a) Compressor oil level/oil pressure and cooling water temps
      (b) Receiver pressure
      (c) Filter outlet pressure and flow
   (4) Oxygen Analyzer
      (a) Sample O2 concentration
      (b) Sample flow rate
      (c) Drywell O2 concentration
      (d) Zero and span bottle/regulator pressures

25 **ID: QDC.ILT.15514** **Points: 1.00**

Unit 1 is in Day 26 of 27 of a refuel outage. The following plant conditions exist:

- RHR Loop A of Shutdown Cooling is in-service.
- The 1B CRD Pump is running.
- The Condensate System is secured.
- RPV water level is 30" and steady.
- RPV coolant temperature is 140°F and steady.
- Control Rod M-7 is at position 48.

If the 1B CRD Pump were to trip in this condition and NO operator action is taken:

(Assume RPV coolant temperature remains constant.)

A. RPV water level will LOWER, generating a Reactor scram signal.

B. CRD Drive Mechanism temperatures will RISE, resulting in seal degradation.

C. RPV water level indications will experience NOTCHING, resulting in inaccurate level indication.

D. HCU accumulator pressures will lower, IMMEDIATELY removing Control Rod M-7 scram capability as soon as the accumulator low pressure alarm light is LIT.

Answer: A

Answer Explanation:

Answer: Since CRD is running and injecting 60 gpm into the Reactor, water must also be rejected (via RWCU, etc.) to maintain level constant. Therefore, the loss of a CRD pump results in a loss of injection into the Reactor and (with no operator action) will result in a net loss of inventory.

Distractor 1 is incorrect: Seal degredation applies to drive temperatures of greater than 350°F. Since RPV temperature is 140°F, high seal temperature does not apply.
Distractor 2 is incorrect: A loss of RVLIS (source: CRD) will allow non-condensable gases to build up in the reference leg. However, the notching is only possible during depressurization. Since the RPV is already depressurized, level indication will remain accurate.
Distractor 3 is incorrect: Accumulator low pressure alarms come in at 1013 psig. Even with the alarm in, adequate pressure exists to scram the control rod. Tech Specs requires the rod to be inserted if HCU accumulator pressure fails below 940 psig.

Reference: QCGP 1-1 "Normal Unit Startup", Rev. 78
Reference provided during examination: N/A

Cognitive level: High

Level (RO/SRO): RO
Tier: 2 Group: 1

Question Source: Modified (QC version of Fermi 2001 RO Retake exam and INPO bank questions 3145 & 9127)
Question History: Fermi 2001 RO Retake Exam

10 CFR Part 55 Content: 41.7

Comments: None

Associated objective(s):

295022.AK2.04 Reactor water level (RO=2.5 / SRO=2.7)

SR-0302-K24 (Freq: LIC=B)
Given a Control Rod Drive Hydraulics operating mode and various plant conditions, PREDICT how each supported system will be impacted by the following Control Rod Drive Hydraulics failures:
a. Loss of CRD pressure

26 **ID: QDC.ILT.15518** **Points: 1.00**

What is the purpose of performing a QGA 500-1 "RPV Blowdown" when directed by QGA 300 "Secondary Containment Control"?

QGA 500-1 "RPV Blowdown" is performed in order to…

A. (1) facilitate RPV level restoration.
(2) place the primary system in its lowest energy state.
(3) reduce the flow from the break into the Reactor Building.

B. (1) place the primary system in its lowest energy state.
(2) reduce the flow from the break into the Reactor Building.
(3) reject heat to the Torus in preference to the Reactor Building.

C. (1) facilitate RPV level restoration.
(2) place the primary system in its lowest energy state.
(3) reject heat to the Torus in preference to the Reactor Building.

D. (1) facilitate RPV level restoration.
(2) reduce the flow from the break into the Reactor Building.
(3) reject heat to the Torus in preference to the Reactor Building.

Answer: B

Answer Explanation:

Answer: The RPV blowdown is performed from QGA 300 to place the primary system in its lowest energy state, reduce the flow from the breaker in to the Reactor Building and reject heat to the Torus in preference to the Reactor Building.

Distractor 1, 2 and 3 are incorrect: Plausible because QGA 500-1 is performed to facilitate RPV level restoration in some cases (i.e. QGA 100) but not QGA 300.

Reference: L-QGA-300, Rev. 6
Reference provided during examination: N/A

Cognitive level: Memory

Level (RO/SRO): RO
Tier: 1 Group: 2

Question Source: New
Question History: N/A

10 CFR Part 55 Content: 41.5

Comments: None

Associated objective(s):

295032.EK3.01 Emergency/normal depressurization. (RO=3.5 / SRO=3.8)

SR-0001-K29 (Freq: LIC=B)
Given QGA 300, 'Secondary Containment Control', EXPLAIN the reasons for the actions.

27 **ID: QDC.ILT.15570** **Points: 1.00**

Unit 1 was at 100% power when a high radiation event occured that resulted in the following:

- 901-3 A-1, RX BLDG HI RADIATION annunciator is ALARMING
- TIP Drive Area local ARM Aux Trip Unit is ALARMING
- ARM Channel 13 on 1-1806-1, NUMAC ARM, is alarming on the 901-11 panel.

QGA 300, Secondary Containment Control, was entered and the condition causing the high radiation event has been corrected. Radiation levels have returned to normal.

Which of the following lists ALL required operator actions to CLEAR the 901-3 A-1, RX BLDG HI RADIATION annunciator?

A. Depress the annunciator reset pushbutton on the 901-3 panel.

B. Locally reset the ARM Aux Trip Unit and then depress the annunciator reset pushbutton on the 901-3 panel.

C. Reset the trip condition at the NUMAC monitor and then depress the annunciator reset pushbutton on the 901-3 panel.

D. Locally reset the ARM Aux Trip Unit, reset the trip condition at the NUMAC monitor and then depress the annunciator reset pushbutton on the 901-3 panel.

Answer: C

Answer Explanation:

Answer: If an alarming ARM trip unit needs to be reset, then verify that the trip condition has cleared, depress RESET softkey on the NUMAC ARM, verify trip clears on display. Once the NUMAC ARM alarm trip is cleared, the 901-3 A-1 alarm can be reset.

Distractor 1 is incorrect: Plausible if the candidate believes that the ARM auto-resets.
Distractor 2 is incorrect: Plausible if the candidate believes that the local ARM has an alarm AND reset pushbutton.
Distractor 3 is incorrect: Combination of distractor 1 and 2.

Reference: QCOP 1800-01 Rev 11, QGA 300 Rev 11, QCOP 1800-03 Rev 7
Reference provided during examination: N/A

Cognitive level: Memory

Level (RO/SRO): RO
Tier: 1 Group: 2

Question Source: Quad ILT Bank (QDC.ILT.04353)
Question History: N/A

10 CFR Part 55 Content: 41.7

Comments: None

Associated objective(s):

SR-1800-K16 (Freq: LIC=I)
STATE the physical location and DESCRIBE the operation of the following Area Radiation Monitor System controls:

a. ARM indicator/trip unit
   (1) Trip Reset
   (2) Trip Check
b. ARM power supply
   (1) On/Off
   (2) Trip Check Adjust
c. NUMAC ARM chassis
   (1) Soft keys
   (2) Cursor keys
   (3) Data Pad keys
d. ARM recorder
   (1) Upper display keys
   (2) Lower display keys
   (3) Chart control keys
   (4) Alarm acknowledge
   (5) Alarm

295033.EA1.01 Area radiation monitoring system (RO=3.9 / SRO=4.0)

28 **ID: QDC.ILT.15460** **Points: 1.00**

Unit 2 is at full power with the Unit 2 EDG OOS.

If Bus 24 trips on overcurrent and NO operator action is taken, what will be the status of the following valves?

- MO 2-1001-28A/B, OUTBD LPCI INJ VLV
- MO 2-1001-29A/B, INBD LPCI INJ VLV

All LPCI injection valves will...

A. remain energized.

B. lose power and will remain de-energized.

C. lose power but will re-energize after a 17 second time delay.

D. momentarily lose power but will re-energize immediately.

Answer: C

Answer Explanation:

Answer: Unit 2 LPCI injection valves are power from MCC 28/29-5, which is normally powered from Bus 29 (due to Bus 29 being fed by the associated Unit 2 EDG will should be available on a loss of off-site power). When Bus 24 trips with the Unit 2 EDG OSS, Bus 29 will remain de-energized. Since the EDG does not re-energize Bus 29, MCC 28/29-5 transfers to Bus 28 after a 17 second time delay. The surveillance acceptance criteria is 15 to 19 seconds for the auto-transfer. The ILT students are taught 17 seconds as a nominal value.

Distractor 1 is incorrect: Plausible if candidate assumes Bus 28 is the normal feed to MCC 28/29-5.
Distractor 2 is incorrect: Plausible if candidate assumes the transfer to Bus 28 requires manual operator action.
Distractor 3 is incorrect: MCC 28/29-5 will immediately transfer to Bus 28 if the EDG is loaded onto Bus 29 and an undervoltage condition is present for 2 seconds.

Reference: QOA 6700-05 Rev 18, QCOS 6700-02 Rev 10, LN-6500 Rev 13
Reference provided during examination: N/A

Cognitive level: High

Level (RO/SRO): RO
Tier: 2 Group: 1

Question Source: ILT Bank (QDC.LORTB.0558)
Question History: N/A

10 CFR Part 55 Content: 41.7

Comments: None

Associated objective(s):

SR-1000-K23 (Freq: LIC=B)
Given an RHR system operating mode and various plant conditions, PREDICT how the RHR system will be impacted by the following support system failures: (Includes power supplies)

a. ECCS Keep Fill high or low pressure
b. Loss of 125vdc to RHR initiation and/or loop select logic
c. Loss of 480vac power to RHR/RHRSW valves and/or room coolers
d. Loss of 250vdc
e. Loss of DGCWP
f. Loss of ADS logic
g. ECCS suction strainer clogging

203000.K6.03 Emergency generator (RO=3.7 / SRO=3.9)

29 **ID: QDC.ILT.15571** **Points: 1.00**

Unit 2 is in Mode 4 with RHR "B" loop in Shutdown Cooling (SDC) with the following plant and system conditions present:

- RHR "B" system flow is 3000 gpm
- One (1) RHR pump is running with a discharge pressure of 207 psig
- RHRSW is in operation
- Reactor coolant temperature is 190ºF
- Cooldown rate is 15ºF/hr

The operator throttles OPEN the MO 2-1001-28B, B LPCI LOOP UPSTREAM SV for three (3) seconds.

Complete the following statement:

As a result of throttling MO 2-1001-28B open, cooldown rate will __(1)__ and the DIFFERENCE between RHRSW heat exchanger outlet pressure and RHR pump discharge pressure will __(2)__.

A. (1) rise
(2) rise

B. (1) rise
(2) lower

C. (1) lower
(2) lower

D. (1) lower
(2) rise

Answer: A

Answer Explanation:

Answer: Opening the 28B injection valve will increase injection into the RPV, raising cooldown rate. Although SDC flow rises, discharge pressure of the pump will lower due to less resistance of the system.

Distractor 1 is incorrect: Plausible if candidate assumes that RHR system pressure is maintained higher than RHRSW pressure or that the 28B valve is located upstream of the RHR heat exchanger.
Distractor 2 is incorrect: Combination of distractor 1 and 3.
Distractor 3 is incorrect: Plausible because this is the behavior of the SDC parameters when the RHR HX bypass valve is throttled open (second method of controlling cooldown rate).

Reference: QCOP 1000-05 Rev 40, LF-1000 Rev 12
Reference provided during examination: N/A

Cognitive level: High

Level (RO/SRO): RO

Tier: 2 Group: 1

Question Source: Modified from Clinton ILT Bank question
Question History: Clinton 2004 ILT NRC Exam Q.30

10 CFR Part 55 Content: 41.5

Comments: Changed answer explanation to "raising cooldown rate" vice "lowering" (response to NRC comment).

Associated objective(s):

205000.A1.09 SDC/RHR pump/system discharge pressure (RO=2.8 / SRO=2.8)

SR-1000-K21 (Freq: LIC=B) Given an RHR system operating mode and various plant conditions, PREDICT how key RHR/RHRSW system and/or plant parameters will respond to manipulation of the following RHR/RHRSW system local/remote controls:
a. RHR/RHRSW MOV control switches
b. RHR/RHRSW pump control switches
c. RHRSW vault sump pump disconnects
d. CONT CLG PERM switch (S-17A/B)
e. CONT CLG 2/3 LEVEL/ECCS INIT BYP switch (S-18A/B)
f. RHRSW START PERM switch (S-19A/B)
g. LPCI INITIATION RESET pushbutton (S-21A/B)
h. LPCI LOOP SELECT LOGIC RESET pushbutton (S-1A/B)
i. FP CLG SUCTION permissive switch (S-22A/B)
j. RESET FOR GRP 2 ISOL VLV 1(2)-1001-29
k. AO-1001-68A/B test switch
l. Head Spray Controller
m. RHR Heat Exchanger SW flow selector switch

30 **ID: QDC.ILT.15461** **Points: 1.00**

Unit 1 was operating at full power when a complete loss of feedwater occured.

The following conditions exist:

- Reactor is scrammed.
- HPCI was manually initiated using the pushbutton on the 901-3 panel and is injecting into the RPV at 5000 gpm.
- RPV water level is -10 inches and rising.

If the ANSO reduces HPCI flow to 500 gpm, what is the impact on the HPCI minimum flow valve, and what, if any, action must be taken?

MO 1-2301-14, MIN FLOW BYP VLV will...

A. OPEN to return HPCI flow to the CCST. No operator action required.

B. remain CLOSED until flow lowers to 40 gpm. No operator action required.

C. OPEN. The operator must minimize the time this valve is open to prevent filling the Torus from the CCST.

D. remain CLOSED and must be manually opened to limit cycling the turbine exhaust check valve.

Answer: C

Answer Explanation:

Answer: The HPCI min flow valve opens if flow drops to < 600 gpm. This will provide a flow path from the CCST to the Torus via the HPCI pump. To prevent draining the CCST to the Torus, action must be taken to minimize the time the min flow valve is open (e.g., raise injection flow or trip HPCI).

Distractor 1 is incorrect: The candidate believes that the HPCI min flow valve circulates water back to the CCST.
Distractor 2 is incorrect: The RCIC min flow valve opens at 40 gpm.
Distractor 3 is incorrect: The candidate believes that the HPCI min flow valve will not act as a min flow valve because the system was manually started.

Reference: QCOP 2300-06 Rev 28, LN-2300 Rev 15
Reference provided during examination: N/A

Cognitive level: High

Level (RO/SRO): RO
Tier: 2 Group: 1

Question Source: New
Question History: N/A

10 CFR Part 55 Content: 41.5

Comments: None.

Associated objective(s):

206000.A2.06 Inadequate system flow: BWR-2,3,4 (RO=3.3 / SRO=3.5)

SR-2300-K21 (Freq: LIC=B)
Given a HPCI System operating mode and various plant conditions, PREDICT how HPCI/plant parameters will respond to manipulation of the following HPCI System local/remote controls:

a. HPCI manual initiation pushbutton
b. Remote turbine trip pushbutton and latch
c. HPCI trip reset switch
d. Turbine trip test pushbutton
e. Isolation trip channel reset keylocks
f. Miscellaneous drain valves reset
g. Thrust bearing test pushbuttons
h. Turning gear controls
i. Turning gear reset switch
j. HPCI flow controller (auto/man operation)
k. Motor speed changer
l. Block Motor speed changer
m. Motor gear unit
n. Gland seal condensate pump
o. Gland seal cooling water pump
p. Gland seal leakoff blower
q. Auxiliary oil pump
r. Emergency bearing oil pump
s. MOV/AOV controls (control room)
t. Room cooler controls
u. Local valve control stations
v. Oil heater controls
w. Min flow valve controller

31 **ID: QDC.ILT.15519** **Points: 1.00**

Unit 1 was operating at power with the "A" Core Spray subsystem operating for its Quarterly System Flow Rate Test per QCOS 1400-01 with the following parameters:

- System flow 4500 gpm
- Discharge pressure 216 psig

During the surveillance, a LOCA occurs on Unit 1 resulting in the following plant conditions:

- Drywell pressure 11 psig
- Reactor water level -65"
- Reactor pressure 400 psig

Which of the following correctly describes the response of "A" Core Spray Pump Discharge Pressure from 216 psig to this point in the accident?

"A" Core Spray Pump Discharge Pressure will…

A. REMAIN THE SAME because the Core Spray Pump continues to discharge to the CCST.

B. INCREASE to pump shutoff head because a flowpath is NOT available for the Core Spray Pump.

C. INCREASE to just above reactor pressure because the Core Spray Pump is injecting into the Reactor.

D. INCREASE to just below pump shutoff head because Core Spray Pump flow is through the minimum flow valve.

Answer: D

Answer Explanation:

Answer: Full flow testing establishes 4500 gpm at approximately 260 psig. On an initiation signal the full flow test valve goes closed. When flow drops below to <577 gpm, the minimum flow starts to open. The A Core Spray pump idles in this mode until RPV pressure drops below 325 psig when the inject valve opens.

Distractor 1 is incorrect: This would be the correct answer if Core Spray test valve did not close on an initiation.
Distractor 2 is incorrect: This would be the correct answer with no minimum flow.
Distractor 3 is incorrect: This would be the correct answer if the inject valve were open and Core Spray was injecting.

Reference: QCOS 1400-01, Rev 36, "Quarterly Core Spray System Flow Rate Test"
Reference provided during examination: N/A

Cognitive level: High

Level (RO/SRO): RO
Tier: 2 Group: 1

Question Source: Bank (QC version of INPO Bank #12726 from a Cooper '03 exam)
Question History: Cooper 2003 ILT NRC Exam

10 CFR Part 55 Content: 41.7

Comments: None

Associated objective(s):

209001.A3.03 System pressure (RO=3.5 / SRO=3.5)

SR-1400-K20 (Freq: LIC=B) Given a system operating mode and various plant conditions, EVALUATE the following system indications and DETERMINE if the indications are expected and normal:

a. Core Spray
   (1) Pump run/trip status
   (2) Valve position
   (3) Pump suction and discharge pressures
   (4) Pump flowrate
   (5) Pump seal flowrate
   (6) Sparger differential pressure
   (7) Pump motor current
b. ECCS Keep Fill pump discharge pressure

32 **ID: QDC.ILT.15464** **Points: 1.00**

Unit 1 was at full power when a loss of offsite power (LOOP) and a LOCA occurred. The following conditions exist:

- Reactor is scrammed.
- The Unit 1/2 EDG failed to start.
- RPV water level is -40" and lowering.
- The US has ordered SBLC injection for RPV level control.

What is the expected result one (1) minute after the NSO positions the keylock switch A AND B PUMP SELECT to SYS 1 & 2?

A. SQUIB A continuity light ON
SQUIB B continuity light OFF
FLOW light is ON

B. SQUIB A continuity light ON
SQUIB B continuity light ON
FLOW light is OFF

C. SQUIB A continuity light OFF
SQUIB B continuity light OFF
FLOW light is OFF

D. SQUIB A continuity light OFF
SQUIB B continuity light OFF
FLOW light is ON

Answer: D

Answer Explanation:

Answer: Squib A light is off due to loss of bus 18, squib B light is off due to system initiation by the control switch, flow light is on due to B pump injecting to the reactor.

Distractor 1 is incorrect: Candidate does not realize that power is lost to the A squib valve (MCC 18-1A).
Distractor 2 is incorrect: Candidate assumes power is only lost to the pump.
Distractor 3 is incorrect: Candidate assumes that power is lost to all pumps and squib valves.

Reference: QCOP 1100-02 Rev 12, LIC-1100 Rev 14, LN-6500 Rev 13, QOM 1-6700-T21 Rev 6, QOA 6700-04 Rev 22
Reference provided during examination: N/A

Cognitive level: High

Level (RO/SRO): RO
Tier: 2 Group: 1

Question Source: ILT Bank (QDC.ILT.11637)
Question History: N/A

10 CFR Part 55 Content: 41.7

Comments: None.

Associated objective(s):

SR-1100-K23 (Freq: LIC=B)
Given a SBLC operating mode and various plant conditions, PREDICT how the SBLC will be impacted by the following support system failures: (Includes power supplies)
a. Storage Tank Heater Power Supply
b. Pump Suction Piping Heater Power Supply
c. Pump/Squib Valve Power Supply
d. Instrument Air
e. Service Air
f. Clean Demin

211000.A4.03 Explosive valves firing circuit status (RO=4.1 / SRO=4.1)

33 **ID: QDC.ILT.15465** **Points: 1.00**

Given the following:

- Unit 1 is at 75% power
- Control rod F-8 selected on the Rod Select Matrix
- Control Rod N-10 is at position 48

If the NSO places the Individual Rod Scram Test Switch on the 901-16 panel for Control Rod N-10 to the extreme UP position and leaves it there, which of the following indications will result ten (10) seconds after switch manipulation?

Indication for Control Rod N-10 on the Full Core Display will show a...

A. green 00 and the individual blue scram light will be lit.

B. green double-dash and the individual blue scram light will be lit.

C. red 48 and eight white pilot solenoid lights on the 901-5 panel will be lit.

D. red 48 and four white pilot solenoid lights on the 901-5 panel will be extinguished.

Answer: B

Answer Explanation:

Answer: The individual scram switch de-energizes <u>both</u> sides to scram that rod only. The blue scram light will be lit when the scram inlet and outlet valves are open (sensed by limit switches).

Distractor 1 is incorrect: Plausible if the candidate believes that the control rod will scram to position 00.
Distractor 2 is incorrect: Plausible if the candidate believes that the rod will not scram if it is not selected on the Rod Select Matrix.
Distractor 3 is incorrect: Plausible if the candidate believes that only a half scram for the control rod will result.

Reference: QCOS 0300-23 Rev 3, LIC-0280 Rev 11
Reference provided during examination: N/A

Cognitive level: Memory

Level (RO/SRO): RO
Tier: 2 Group: 1

Question Source: Modified from QDC.ILT.608712
Question History: N/A

10 CFR Part 55 Content: 41.7

Comments: None.

Associated objective(s):

SR-0500-K21 (Freq: LIC=B)
Given a Reactor Protection System operating mode and various plant conditions, PREDICT how RPS/plant parameters will respond to manipulation of the following Reactor Protection System local/remote controls:

a. Panel 901(2)-15/17
   (1) RPS trip channel test keylock switches
   (2) RPS breakers
b. Panel 901(2)-16
   (1) Individual scram switches
c. Panel 901(2)-5
   (1) Reactor Mode Switch
   (2) Manual scram pushbuttons
   (3) Scram Reset Switch
   (4) Discharge Volume High Water Level Bypass Switch
   (5) Discharge Volume Isolation test Switch
d. RPS Power Distribution
   (1) MG control switch
   (2) Voltmeter Transfer Switch
   (3) Voltage Adjust rheostat
   (4) Auxiliary Reset pushbutton
   (5) RPS supply breakers to 901(2)-15/17
   (6) RPS Normal/Reserve power breakers

212000.A4.01 Provide manual SCRAM signal(s) (RO=4.6 / SRO=4.6)

34 **ID: QDC.ILT.15466** **Points: 1.00**

Unit 2 was operating at 26% reactor power when the main turbine tripped on overspeed.

Which of the following would be an **UNEXPECTED** alarm one (1) minute after the turbine trip?

A. 902-5 D-10, CHANNEL A REACTOR SCRAM

B. 902-8 A-1, 4KV MAIN FEED BREAKER TRIP

C. 902-7 B-10, STATOR COOLING PUMPS AUTO TRIP

D. 902-5 H-4, TURB PRESS GEN LOAD REJ STM VLV BYPASS

Answer: A

Answer Explanation:

Answer: An automatic Reactor scram on a Turbine trip is bypassed when Reactor power is ≤ 38.5% rated thermal power. Therefore, RPS channel A scram (D-10) should still be extinguished.

Distractor 1 is incorrect: When aux power transfers to T-12, 4KV bus breakers to Bus 11 and 14 will have tripped, locking in annunciator 901-8 A-1.
Distractor 2 is incorrect: The generator trips 30 seconds after the turbine trips. The SCW pumps receive a trip signal when the generator trips.
Distractor 3 is incorrect: When ≤ 38.5% rated thermal power, H-4 on the 901-5 panel will be lit indicating that turbine trip RPS scrams are bypassed.

Reference: QOA 900-5 H-4 Rev 9, QCAN 901(2)-5 D-10 Rev 6
Reference provided during examination: N/A

Cognitive level: High

Level (RO/SRO): RO
Tier: 2 Group: 1

Question Source: Modified from QDC.ILT.632755
Question History: N/A

10 CFR Part 55 Content: 41.10

Comments: None.

Associated objective(s):

212000.2.4.46 Ability to verify that the alarms are consistent with the plant conditions. (RO=4.2 / SRO=4.2)

SR-5600-K24 (Freq: LIC=B)
Given a Main Turbine and Auxiliary Systems operating mode and various plant conditions, PREDICT how each supported system will be impacted by the following Main Turbine and Auxiliary Systems failures:
a. Turbine trip
b. Loss of lube oil pressure

35 **ID: QDC.ILT.15480** **Points: 1.00**

Given the following:

- Unit 1 startup in progress
- Reactor Mode switch in START/HOT STBY
- All IRM Channels on Range 3

The RMCS will generate a Rod Block if any IRM...

A. companion APRM is reading 2.5%.

B. channel is reading 9/125 of full scale.

C. channel is reading 114/125 of full scale.

D. SRM/IRM Detector Position display switch is de-selected.

Answer: C

Answer Explanation:

Answer: With the Reactor Mode switch in the STARTUP/HOT STBY position (Mode 2), a rod block is generated if any IRM detector is ≥ 112/125th of full scale.

Distractor 1 is incorrect: The IRM Hi-Hi w/ companion APRM downscale trip is bypassed when mode switch is in RUN.
Distractor 2 is incorrect: Downscale setpoint is ≤ 5/125th of full scale.
Distractor 3 is incorrect: De-selecting the SRM/IRM Detector display switch will allow IRMs to automatically insert on a Reactor Scram until the Scram is reset.

Reference: QCOP 0700-02 Rev 15
Reference provided during examination: N/A

Cognitive level: Memory

Level (RO/SRO): RO
Tier: 2 Group: 1

Question Source: Modified from QDC.ILT.00861
Question History: N/A

10 CFR Part 55 Content: 41.2 to 41.9

Comments: None.

Associated objective(s):

SR-0702-K09 (Freq: LIC=I)
LIST the signals which cause the following Intermediate Range Monitor System trips including purpose and setpoints. DESCRIBE how they are bypassed AND how they are reset.

a. Inop
b. Downscale
c. High
d. High-high
e. Wrong position

215003.K1.02 Reactor manual control (RO=3.6 / SRO=3.6)

36 **ID: QDC.ILT.15468** **Points: 1.00**

Following a refueling outage, the NSO attempts to drive all of the IRMs into the core in preparation for entering MODE 2.

- IRM 15 fails to drive in.
- All other IRM's drive in and all other plant parameters are normal.

What impact, if any, will this failure have on the impending startup?

Control Rod withdrawal can continue...

A. with NO further action.

B. if the IRM bypass joystick is positioned to CH 15.

C. if the IRM 15 Function (Mode) switch is positioned to STANDBY.

D. if the IRM 15 Individual Select switch on the 901-5 panel is placed in the DE-SELECTED condition.

Answer: B

Answer Explanation:

Answer: Candidate must recognize that the IRM system interacts with the RMCS and that any IRM not fully inserted while in Mode 2 will generate a rod block and thereby preclude starting up. IRM 15 is bypassed by taking the IRM bypass joystick to CH 15.

Distractor 1 is incorrect: The rod block (due to IRM INOP) will prevent pulling rods for the startup.
Distractor 2 is incorrect: Placing the Mode switch to STANDBY will insert an IRM INOP signal (rod block and 1/2 scram).
Distractor 3 is incorrect: De-selecting the Individual IRM select switch will prohibit the IRM from auto-inserting into the reactor on a scram.

Reference: QCOP 0700-02 Rev 15
Reference provided during examination: N/A

Cognitive level: High

Level (RO/SRO): RO
Tier: 2 Group: 1

Question Source: Quad ILT Bank (QDC.ILT.106775)
Question History: N/A

10 CFR Part 55 Content: 41.5

Comments: None.

Associated objective(s):

SR-0702-K26 (Freq: LIC=B)
EVALUATE given Intermediate Range Monitor System parameter indications and/or responses depicting a system specific abnormality/failure and DETERMINE a course of action to correct or mitigate the following abnormal condition(s):
a. Output fails high/low
b. Loss of 24/48 DC power
c. Detector drive failure

215003.A2.02 IRM inop condition (RO=3.5 / SRO=3.7)

37 **ID: QDC.ILT.15521** **Points: 1.00**

Unit 2 is performing a Hot-Fast Restart per QCGP 1-1 with the reactor critical.

The following indications are present on the 902-5 panel:

- SRM Channels 21-24 indicate $3x10^5$ cps and rising.
- IRM Channels 11-18 indicate 30/125ths of full scale on Range 2 and rising.
- All SRM and IRM detectors are fully inserted into the core.

Which of the following responses is within the guidance of plant procedures?

A. Continue rod withdrawal ONLY.

B. Range up IRMs and continue rod withdrawal.

C. Withdraw SRMs to the full out position and continue rod withdrawal.

D. Withdraw SRMs to maintain > 100 cps and < $1x10^5$ cps and continue rod withdrawal.

Answer: D

Answer Explanation:

Answer: During a Reactor start-up, if SRM detectors are NOT withdrawn, the SRM high trip setpoint ($1x10^5$cps) may be exceeded causing a rod withdrawal block. The desired objective is to retract the detectors sufficiently to maintain channel indications between the detector retract permit trip setpoint and the SRM high trip setpoint until the flux level is on Range 4 of the IRM channels. (Note: Candidates memorize the analytical setpoints of $1x10^5$cps (SRM High) and 100 cps (Retract Permit) vice the field setpoints of $2.8x10^5$cps and 163 cps listed in QCOP 0700-01.)

Distractor 1 is incorrect: Plausible if the candidate does not recognize that the SRM high trip setpoint has been exceeded.
Distractor 2 is incorrect: As Reactor power increases during a startup, IRMs should be ranged up at approximately 50/125ths of scale.
Distractor 3 is incorrect: Plausible if the candidate does not recognize that the SRM detector will issue a rod block if it is reading < 100 cps.

Reference: QCOP 0700-01 Rev 12, QCOP 0700-02 Rev 15
Reference provided during examination: N/A

Cognitive level: High

Level (RO/SRO): RO
Tier: 2 Group: 1

Question Source: Modified from Quad ILT Bank QDC.L.00628
Question History: N/A

10 CFR Part 55 Content: 41.10

Comments: None.

Associated objective(s):

SR-0701-K20 (Freq: LIC=B)
Given the following Source Range Monitor System indications/responses and various plant conditions including startup, shutdown, refueling, and scram, EVALUATE the indications/responses and DETERMINE if the indication/ response is expected and normal.

a. SRM/IRM detector position display lights
b. SRM count rate
c. SRM period
d. SRM trip/status lights

215004.2.1.23 Ability to perform specific system and integrated plant procedures during all modes of plant operation. (RO=4.3 / SRO=4.4)

38 **ID: QDC.ILT.15469** **Points: 1.00**

What is the power supply to APRM channel 4?

A. RPS B

B. Instrument Bus

C. Essential Service Bus

D. 24/48 VDC Battery Bus 1A

Answer: A

Answer Explanation:

Answer: RPS B supplies power to APRM 4-6

Distractor 1 is incorrect: Instrument Bus supplies power to the 901-5 desk section APRM lights.
Distractor 2 is incorrect: Essential Service Bus supplies power to the APRM recorders.
Distractor 3 is incorrect: 24/48 VDC supplies power to the SRMs.

Reference: QOA 7000-01 Rev 31
Reference provided during examination: N/A

Cognitive level: Memory

Level (RO/SRO): RO
Tier: 2 Group: 1

Question Source: Quad ILT Bank (QDC.ILT.15469)
Question History: N/A

10 CFR Part 55 Content: 41.7

Comments: None.

Associated objective(s):

SR-0703-K19 (Freq: LIC=I)
LIST the plant systems which support the LPRM/APRM System and DESCRIBE the nature of support. (Includes power supplies)

215005.K2 02 APRM channels (RO=2.6 / SRO=2.8)

39 **ID: QDC.ILT.15523** **Points: 1.00**

Unit 2 was operating at full power when a loss of all feedwater occured. The RCIC system was manually started and is currently injecting into the RPV for water level control.

If RPV water level reaches +48", the RCIC Turbine will trip by closing __(1)__.

The RCIC high RPV water level trip __(2)__.

A. (1) the RCIC TRIP THROTTLE VLV
(2) AUTOMATICALLY resets

B. (1) the RCIC TRIP THROTTLE VLV
(2) must be MANUALLY reset

C. (1) MO 2-1301-61, STM TO TURB VLV
(2) AUTOMATICALLY resets

D. (1) MO 2-1301-61, STM TO TURB VLV
(2) must be MANUALLY reset

Answer: C

Answer Explanation:

Answer: The RCIC Steam Supply valve (1301-61) closes on a high RPV level trip. It auto-resets when the high RPV level condition clears.

Distractor 1 is incorrect: Plausible because the RCIC Trip Throttle valve closes on a RCIC trip from overspeed.
Distractor 2 is incorrect: Combination of Distractor 1 and 3.
Distractor 3 is incorrect: Plausible because all other automatic RCIC trips must be manually reset.

Reference: QCOP 1300-02 Rev 27, UFSAR Ch. 5.4.6.2 Rev 9
Reference provided during examination: N/A

Cognitive level: Memory

Level (RO/SRO): RO
Tier: 2 Group: 1

Question Source: Bank (Hope Creek ILT Exam Bank)
Question History: 2005 Hope Creek ILT Exam

10 CFR Part 55 Content: 41.7

Comments: None.

Associated objective(s):

217000.K4.02 Prevent over filling reactor vessel (RO=3.3 / SRO=3.3)

SR-1300-K10 (Freq: LIC=B)
DESCRIBE how the RCIC System responds to a trip signal.

40 **ID: QDC.ILT.15524** **Points: 1.00**

Given the following plant conditions:

- The plant was initially at rated power.
- A Loss of Offsite Power (LOOP) and a small-line-break Loss of Coolant Accident (LOCA) have occurred.
- All control rods have fully inserted.
- Reactor pressure is being controlled automatically by relief valves.
- RCIC is injecting at 400 gpm but HPCI has tripped and is unavailable.
- RPV water level is -49" and lowering at 10" per minute.
- Drywell pressure is 2.0 psig and rising at 0.5 psig per minute.
- Both Emergency Diesel Generators have started but neither closed on to their respective bus.

Assuming no operator action, how will the Automatic Depressurization System (ADS) relief valves respond?

The ADS relief valves will…

A. NOT automatically open.

B. automatically open in 60 seconds.

C. automatically open in 170 seconds.

D. automatically open in 570 seconds.

Answer: A

Answer Explanation:

Answer: With a loss of off-site power and a failure of the EDGs to load on their busses, the ECCS pumps do not have a power supply, so they will not start. One of the requirements for ADS to auto blowdown is a Low pressure ECCS pump running.

Distractor 1 is incorrect: In 60 seconds both RPV level and Drywell pressure will be at their ADS initiation setpoints.
Distractor 2 is incorrect: In 60 seconds, ADS initiation conditions will be satisfied and the 110 second timer will start. If the RHR pumps or CS pumps are running, the ADS SRVs will open.
Distractor 3 is incorrect: In 60 seconds the RPV level will be -59". If it was present without Drywell >2.5 psig, an 8.5 minute (510 seconds) timer starts and times-out.

Reference: QCAN 901(2)-3 C-15 Rev 7
Reference provided during examination: N/A

Cognitive level: High

Level (RO/SRO): RO
Tier: 2 Group: 1

Question Source: Quad ILT Bank (QDC.ILT.627575)
Question History: N/A

10 CFR Part 55 Content: 41.7

Comments: None

Associated objective(s):

SR-0203-K20 (Freq: LIC=B)
Given various plant conditions, EVALUATE the following ADS valve indications / responses and DETERMINE if the indication / response is expected and normal.
a. Electromatic relief valves/ PORVs/ Target Rock safety-relief indicating lights
b. Acoustic monitor indicating lights
c. ADS valve tail pipe temperature

218000.K5.01 ADS logic operation (RO=3.8 / SRO=3.8)

41 **ID: QDC.ILT.15470** **Points: 1.00**

Given the following:

- Unit 1 is in Mode 1.

Which of the following instruments, if determined to be inoperable, will affect instrumentation controlled by TS LCO 3.3.6.1, Primary Containment Isolation Instrumentation?

A. LS 1-2351A, Torus Water Level - High

B. PS 1-1001-88A, Drywell Pressure - High

C. TR 1-5741-130 Point 28, Drywell Temperature

D. RE 1-1705-2A, Steam Line Radiation Monitor

Answer: B

Answer Explanation:

Answer: PS 1-1001-88A is used by the PCIS system to initiate various functions on High Drywell pressure.

Distractor 1 is incorrect: LS 1-2351A is used by HPCI and RCIC suction logic transfer to the CCSTs and is controlled by TS LCO 3.3.5.1 (ECCS Instrumentation).
Distractor 2 is incorrect: TR 1-5741-130 Point 28 inputs to annunciator 912-7 A-6 and is controlled by TS LCO 3.3.3.1 (PAM Instrumentation).
Distractor 3 is incorrect: RE 1-1705-2A, Steam Line Radiation Monitor, is used to trip the Mechanical Vacuum Pump and is controlled by TS LCO 3.3.7.2 (Mechanical Vacuum Pump Trip Instrumentation).

Reference: QCOS 1600-06 Rev 19, Table 3.3.6.1-1 Amendment No. 224/219
Reference provided during examination: N/A

Cognitive level: Memory

Level (RO/SRO): RO
Tier: 2 Group: 1

Question Source: Dresden ILT Bank (NRC-12743)
Question History: Dresden 2006 NRC exam

10 CFR Part 55 Content: 41.7

Comments: None.

Associated objective(s):

223002.K6.05 Containment instrumentation (RO=3.0 / SRO=3.3)

SR-1603-K29 (Freq: LIC=I)
Given Primary Containment Isolation (PCI) System key parameter indications and various plant conditions, DETERMINE, from memory, if the Primary Containment Isolation (PCI) System Tech Spec LCOs have been met.

42 **ID: QDC.ILT.15463** **Points: 1.00**

The following conditions exist on Unit 1:

- Reactor mode switch is in SHUTDOWN.
- Reactor pressure is 950 psig and steady.
- All relief valves are closed.
- Rx Bldg Dist. Panel 1 is de-energized.

If the ANSO places the 1-203-3B, ADS RELIEF VLV control switch in the MAN position, reactor pressure will...

A. lower immediately due to the relief valve opening.

B. lower following a 14.5 second time delay due to the relief valve opening.

C. remain constant because the relief valve will NOT open due to the loss of Rx Bldg Dist. Panel 1.

D. remain constant because the relief valve will NOT open because RPV pressure is below 1115 psig.

Answer: A

Answer Explanation:

Answer: When taken to MAN, the relief valve will open.

Distractor 1 is incorrect: The 14.5 second time delay is on a subsequent automatic reopening (following a closure signal).
Distractor 2 is incorrect: RB Dist Panel 1 is the normal power supply, TB RES Bus 1B-1 is the backup power supply to the relief valve solenoids.
Distractor 3 is incorrect: Plausible if candidate believes that the relief valve will not open in MAN when below the auto-opening setpoint.

Reference: QCOP 0203-01 Rev 13, LIC-0203 Rev 15
Reference provided during examination: N/A

Cognitive level: High

Level (RO/SRO): RO
Tier: 2 Group: 1

Question Source: Modified from ILT Bank (QDC.ILT.627666)
Question History: N/A

10 CFR Part 55 Content: 41.5

Comments: None.

Associated objective(s):

239002.A1.04 Reactor pressure (RO=3.8 / SRO=3.8)

SR-0203-K21 (Freq: LIC=B)
Given various plant conditions, PREDICT how ADS valve and plant parameters will respond to manipulation of the following local/remote controls:

a. ADS Valve Keylock Control Switches
b. Drywell Pressure Reset Keylock Switch
c. Timer Reset Pushbutton
d. Auto Blowdown Inhibit Keylock Switch
e. Auto Blowdown Inhibit Keylock Switch (901-32-3W)

43 **ID: QDC.ILT.15528** **Points: 1.00**

Unit 2 is operating at 100% power when the following alarm annunciates:

- 902-5 H-8, 2B FW ACTUATOR TROUBLE

If the annunciator is due to a loss of MCC 25-1-1, what is the impact on the DFWLC system and what operator action must be taken?

A. The 2A and 2B FRV will remain in automatic control.
Verify DFWLC automatically maintains RPV water level at 30" in 3-ELEMENT.

B. The 2A and 2B FRV automatically transfer to FORCED MANUAL.
Verify the LFFRV automatically maintains RPV water level at 30".

C. The 2B FRV will LOCKUP and DFWLC will remain in 3-ELEMENT.
Verify the 2A FRV automatically maintains RPV water level at 30".

D. The 2B FRV will LOCKUP and DFWLC will automatically transfer to SINGLE-ELEMENT.
Verify the 2A FRV automatically maintains RPV water level at 30".

Answer: C

Answer Explanation:

Answer: A loss of MCC 25-1-1 causes a loss of power to the 2B actuator and results in a lockup of the FRV. Since only the 2B FRV is locked up, the other FRV will remain in 3-element control and will control RPV level. Per QCAN 901(2)-5 H-8, operator action is to verify that the 2A FRV is controlling vessel level.

Distractor 1 is incorrect: Plausible if the candidate assumes that there is a backup power supply to the FRV actuator (like there is for DFWLC)
Distractor 2 is incorrect: If conditions exist that force both FRVs into manual, the LFFRV will be forced into local single-element control and will control level.
Distractor 3 is incorrect: Various other conditions (e.g., failure of multiple steam/feed flow detectors) will cause the 2A FRV to shift to single-element control and maintain level.

Reference: QCAN 901(2)-5 H-8 Rev 7, LIC-0600 Rev 6, QCOP 0600-21 Rev 13
Reference provided during examination: N/A

Cognitive level: High

Level (RO/SRO): RO
Tier: 2 Group: 1

Question Source: New
Question History: N/A

10 CFR Part 55 Content: 41.5

Comments: None

Associated objective(s):

SR-0600-K26 (Freq: LIC=B)
EVALUATE given key Feedwater Level Control System parameter indications and/or responses depicting a system specific abnormality/failure and DETERMINE a course of action to correct or mitigate the following abnormal condition(s):

a. Feedflow sensor fails high/low
b. Steam flow sensor fails high/low
c. RPV level sensor fails high/low
d. Reactor level SMS value error
e. RFP suction pressure SMS value error
f. Steam flow SMS value error
g. Feedflow error with calculated feedwater flow activated
h. Loss of 480vac
i. Loss of Essential Service or Instrument Bus power
j. Loss of instrument air
k. FWLC Hydraulic Skid failures:
   (1) Pump trip
   (2) Loss of FWLC position feedback
   (3) Oil leak
   (4) Tracking error

259002.A2.06 Loss of controller signal output (RO=3.3 / SRO=3.4)

44 **ID: QDC.ILT.15529** **Points: 1.00**

Unit 1 is at 100% power when a transient results in the automatic initiation of the Standby Gas Treatment (SBGT) system.

Which of the following 912-5 panel indications indicate proper operation of SBGT if the system operates as expected?

A. 1/2-7505A, INLET DMPR and 1/2-7507A, FAN DISCH DMPR, OPEN.
1/2-7540-13A, SBGTS FLOW, indicates 2600 scfm.

B. 1/2-7505B, INLET DMPR and 1/2-7507B, FAN DISCH DMPR, OPEN.
1/2-7540-13B, SBGTS FLOW, indicates 2600 scfm.

C. 1/2-7505A, INLET DMPR and 1/2-7507A, FAN DISCH DMPR, OPEN.
1/2-7540-13A, SBGTS FLOW, indicates 4000 scfm.

D. 1/2-7505B, INLET DMPR and 1/2-7507B, FAN DISCH DMPR, OPEN.
1/2-7540-13B, SBGTS FLOW, indicates 4000 scfm.

Answer: D

Answer Explanation:

Answer: The normal lineup for SBGT is the B train in primary and the A train in standby. On an initiation signal, the B train inlet and outlet dampers will be open and system flow should be 3600-4400 scfm (4000 scfm nominal).

Distractor 1 is incorrect: Combination of Distractor 2 and 3.
Distractor 2 is incorrect: Candidate assumes that SBGT flow should be 2600 scfm (SBGT heater trip setpoint).
Distractor 3 is incorrect: Candidate assumes that the A train starts because it is a Unit 1 signal.

Reference: QCOP 7500-01 Rev 19
Reference provided during examination: N/A

Cognitive level: Memory

Level (RO/SRO): RO
Tier: 2 Group: 1

Question Source: New
Question History: N/A

10 CFR Part 55 Content: 41.7

Comments: None

Associated objective(s):

261000.A3.01 System flow (RO=3.2 / SRO=3.3)

SR-7500-K20 (Freq: LIC=B)
Given a SBGTS operating mode and various plant conditions, EVALUATE the following SBGTS indications/responses and DETERMINE if the indication/ response is expected and normal.

a. System flow
b. Fan and heater indicating lights
c. MOV position
d. Air-operated outlet valve 1/2-7510A/B position
e. Heater inlet and outlet temperatures
f. Heater differential temperature
g. Run-time
h. Train component differential pressures
i. Charcoal adsorber temperature

45 **ID: QDC.ILT.15471** **Points: 1.00**

Unit 1 and Unit 2 are at 100% power and GCB 1-3 is open.

- CKT BKR 1-3 SYNCHRONIZING switch is in the ON position
- All other 345 kV ring bus breakers are closed

If the GCB 1-3 control switch on the 912-2 panel is placed in the CLOSE position, which GCB 1-3 indicating light(s) will be ENERGIZED?

A. Two red lights

B. One green light ONLY

C. One amber light and one green light

D. One red light ONLY

Answer: A

Answer Explanation:

Answer: Since GCB 1-3 is the only open breaker, synchronization requirements will be meet with the synchroscope on. When GCB 1-3 is closed, verify both RED lights are energized. This indicates breaker is closed and monitoring trip coils 1 and 2 are energized.

Distractor 1 is incorrect: Green light indication means that the breaker is open. Plausible if the candidate assumes that GCB 1-3 is a Unit 2 Generator output breaker (similar to GCB 1-11) because 345 KV output breakers cannot be shut from the 912-2 panel with the Generator field breaker closed.
Distractor 2 is incorrect: With a green and amber light indication means that the breaker is tripped. Plausible if the candidate assumes that GCB 1-3 is a Generator output breaker because 345 KV output breakers cannot be shut from the 912-2 panel with the Generator field breaker closed.
Distractor 3 is incorrect: There are two closing coils per GCB. Plausible because 4KV breakers have one trip coil.

Reference: QCOP 6400-08 Rev 14
Reference provided during examination: N/A

Cognitive level: Memory

Level (RO/SRO): RO
Tier: 2 Group: 1

Question Source: Quad ILT Bank (QDC.ILT.626502)
Question History: N/A

10 CFR Part 55 Content: 41.7

Comments: None.

Associated objective(s):

262001.A4.01 All breakers and disconnects (including available switch yard): Plant-Specific (RO=3.4 / SRO=3.7)

SR-6100-K21 (Freq: LIC=B)
Given a 345 KV Switchyard/ Main Transformer System operating mode and various plant conditions, PREDICT how key 345 KV Switchyard/ Main Transformer System/ plant parameters will respond to manipulation of the following remote controls:

a. 345 KV breaker synchronizing controls
b. 345 KV breaker control switches
c. 345 KV breaker auto reclosing enable/disable toggle switch
d. Bus voltmeter selector switches

46 **ID: QDC.ILT.15472** **Points: 1.00**

Unit 1 is at full power with the Essential Service System (ESS) operating in its normal lineup.

What effect will opening the Battery DC input breaker from 250 VDC MCC 1 at UPS Panel 901-63B panel have on ESS?

The ESS...

A. Inverter will continue to power ESS loads from Bus 18.

B. Bus will de-energize and have to be manually transferred to MCC 18-2.

C. ASCO ABT switch will auto-transfer to MCC 18-2 to restore power to the ESS Bus.

D. Static Switch will auto-transfer to Bus 17 to maintain continuous power to ESS loads.

Answer: A

Answer Explanation:

Answer: The normal power supply to the ESS Bus is Bus 18 via the Inverter because the Rectifier output voltage is set higher than the battery float voltage. Opening the 250 VDC supply breaker to the UPS will not interrupt power to the ESS bus.

Distractor 1 is incorrect: The ABT is power-seeking and requires a manual reset to return to its normal power supply.
Distractor 2 is incorrect: The ABT will auto-transfer if the UPS fails.
Distractor 3 is incorrect: The static switch will swap to Bus 17 if the Inverter fails or loses power.

Reference: QOP 6800-03 Rev 31, LN-6800 Rev 11
Reference provided during examination: N/A

Cognitive level: High

Level (RO/SRO): RO
Tier: 2 Group: 1

Question Source: Modified from QDC.ILT.185879
Question History: N/A

10 CFR Part 55 Content: 41.7

Comments: None.

Associated objective(s):

262002.K6.02 D.C. electrical power (RO=2.8 / SRO=3.1)

SRN-6800-K23 (Freq: LIC=B NF=B)
Given an Essential Service/Instrument Bus Systems operating mode and various plant conditions, PREDICT how the Essential Service/Instrument Bus Systems will be impacted by the following support system failures:
a. Loss of Bus 17 or 18
b. Loss of MCC 18-2 or 15-2
c. Loss of 250 VDC

47 **ID: QDC.ILT.15575** **Points: 1.00**

Unit 1 is at 85% power when the following occurs:

- Complete loss of the Essential Service Bus.

Which of the following actions must be taken to control Reactor water level and why?

A. (1) Verify that the 1A and 1B FRV are locked up.
(2) Take REMOTE manual control of the 1A and 1B FRV because 3-ELEMENT and SINGLE-ELEMENT control are NOT available.

B. (1) Take LOCAL manual control of the 1A and 1B FRV.
(2) Adjust FRV position using the MANUAL DIRECTIONAL CONTROL VALVE or HAND PUMP because remote operation is NOT available.

C. (1) Verify that the 1A FRV is AUTOMATICALLY controlling Reactor water level and the 1B FRV is locked up.
(2) Control Reactor water level in 3-ELEMENT because it provides maximum system performance.

D. (1) Verify that the 1B FRV is AUTOMATICALLY controlling Reactor water level and the 1A FRV is locked up.
(2) Control Reactor water level in 3-ELEMENT because it provides maximum system performance.

Answer: B

Answer Explanation:

Answer: On a loss of Essential Service, the 1A and 1B FRV will immediately lockup due to a loss of power to the lockup solenoid valves. Per QOA 6800-03, 120/240 VAC Essential Service Bus Failure, the FRVs are to be operated in local manual control per QCOP 0600-18.

Distractor 1 is incorrect: Plausible if the candidate assumes that the ESS bus is the only power supply to the DFWLC cabinet (Instrument Bus is normal power supply) and that automatic control is not available with a loss of cabinet power.
Distractor 2 is incorrect: Plausible because only one lockup solenoid on Unit 2 is powered from ESS.
Distractor 3 is incorrect: Plausible because only the 1A FRV actuator power comes from ESS.

Reference: QOA 6800-03 Rev 39, QCOP 0600-18 Rev 20
Reference provided during examination: N/A

Cognitive level: High

Level (RO/SRO): RO
Tier: 2 Group: 1

Question Source: New
Question History: N/A

10 CFR Part 55 Content: 41.10

Comments: None

Associated objective(s):

262002.2.4.35 Knowledge of local auxiliary operator tasks during an emergency and the resultant operational effects. (RO=3.8 / SRO=4.0)

SR-0600-K26 (Freq: LIC=B)
EVALUATE given key Feedwater Level Control System parameter indications and/or responses depicting a system specific abnormality/failure and DETERMINE a course of action to correct or mitigate the following abnormal condition(s):

a. Feedflow sensor fails high/low
b. Steam flow sensor fails high/low
c. RPV level sensor fails high/low
d. Reactor level SMS value error
e. RFP suction pressure SMS value error
f. Steam flow SMS value error
g. Feedflow error with calculated feedwater flow activated
h. Loss of 480vac
i. Loss of Essential Service or Instrument Bus power
j. Loss of instrument air
k. FWLC Hydraulic Skid failures:
   (1) Pump trip
   (2) Loss of FWLC position feedback
   (3) Oil leak
   (4) Tracking error

48 **ID: QDC.ILT.15473** **Points: 1.00**

Unit 1 is at full power with the Unit 1 SBO DG in a normal standby lineup.

Which of the following is supplying power to the 125 VDC SBO Distribution Panel 6A-1?

A. SBO 125 VDC Battery 6A

B. MCC 65-1 through the Isolimiter

C. Reactor Building Distribution Panel 1

D. MCC 65-1 through the 300A Stationary Battery Charger

Answer: D

Answer Explanation:

Answer: During normal operating conditions, the (SBO) 125 VDC bus will be powered from the stationary battery charger. The SBO battery is normally on a float charge.

Distractor 1 is incorrect: The SBO battery is normally on a float charge.
Distractor 2 is incorrect: A step-down transformer called the "isolimiter" takes 480 VAC from MCC 65-1 to provide 120 VAC alternate power to the SBO UPS and DCS.
Distractor 3 is incorrect: The SBO system does not receive power from station 125 VDC.

Reference: QCOP 6900-22 Rev 13
Reference provided during examination: N/A

Cognitive level: Memory

Level (RO/SRO): RO
Tier: 2 Group: 1

Question Source: Quad ILT Bank (QDC.ILT.632416)
Question History: N/A

10 CFR Part 55 Content: 41.2 to 41.9

Comments: Corrected grammar error in stem (response to NRC comment).

Associated objective(s):

263000.K1.02 Battery charger and battery (RO=3.2 / SRO=3.3)

SRN-6620-K15 (Freq: LIC=B NF=B)
DESCRIBE the operation of the following principal Station Blackout Diesel Generators components:

a. A/B Diesel Engines
   (1) Load Sharing and Speed Control Units
   (2) Proportional Electrohydraulic Actuator
   (3) A/B Governor Air Booster Pump
   (4) A/B Overspeed Trip Device (Including Reset)
   (5) A/B Crankcase Pressure Detector (Including Reset)
   (6) A/B Crankcase Ejector/Oil Separator
   (7) Engine Control Programmable Logic Controller
   (8) Shutdown Circuit (Cooldown/Trip)
   (9) Crankover Tool (remove speed sensor, install tool, adjust regulator)
   (10) Crankover tool portable compressor
b. Air Start Subsystems (Two Redundant Systems)
   (1) Compressor (Auto Start/Stop)
   (2) Aftercooler and Motor
   (3) Coalescer Filter (Prefilter) and Moisture Separator Drains
   (4) Dryers
   (5) Pressure Regulator
   (6) Air Start Solenoids
   (7) Air Start Relay Valve
   (8) Air Start Motors
   (9) Automatic Switching to Opposite Starter Bank
c. A/B Jacket Cooling Water Subsystems
   (1) A/B Jacket Water Booster Pumps and Recirc Valves (Auto Starts/Trips)
   (2) A/B Three-Way Temperature Regulating Valve
   (3) A/B Radiator and Fans (Auto Starts/Trips)
   (4) A/B Lube Oil Cooler and Immersion Heater
   (5) A/B Engine-Driven Water Pumps
d. A/B Lube Oil Subsystems
   (1) A/B Scavenging Oil Pump
   (2) A/B Main Oil Pump
   (3) A/B Main Lube Oil Pressure Relief Valve
   (4) A/B Piston Oil Pump
   (5) A/B AC and DC Circulating Oil Pumps
   (6) Lube oil strainer (square and round covers)
e. A/B Diesel Generator Fuel Oil Subsystems
   (1) Fuel Oil Transfer Pumps (Auto Start/Stop)
   (2) A/B Engine-Driven Fuel Pump
   (3) A/B AC Backup Fuel Pump (Auto Start/Stop)
   (4) A/B Manual Fuel Priming Pump
   (5) A/B Fuel Oil Inlet, Return and Bypass Relief Valves
   (6) A/B Fuel Rack and manual levers
   (7) A/B Fuel Injector Cam and Injectors
   (8) Fuel Oil Storage Tank Leak Sensor Module
f. A/B Diesel Generator Combustion Air and Exhaust Subsystems
   (1) A/B Turbocharger (Turbine/Compressor)
g. Generator (Include Ratings)
   (1) Permanent Magnetic Generator (PMG)
   (2) Space Heaters (Auto Start/Stop)

h. 4 KV Distribution
  (1) 13.8/4KV Transformer T42R-6
  (2) 4 KV Bus 61 (71)
    (a) Normal Feed Breaker 6108 (7108)
    (b) SBO DG Output Breaker 6101 (7101)
    (c) Tie Feed Breakers (6105/7105) (Bus 61/71 Crossties)
    (d) Safety-Related Tie Breakers to Bus 13-1/14-1 (23-1/24-1) 6103/6104 (7103/7104)
    (e) 4 KV/480 Transformer Feed Breaker 6107 (7107)
    (f) 4 KV Breaker Local Control (Hubbell Pushbutton Station)
  (3) Synchronizing Panel 2201(2)-117
    (a) Generator Control Unit
    (b) Synchrocloser Unit
i. 480 VAC Distribution
  (1) 4 KV/480 VAC Transformer 65 (75)
  (2) 480 VAC MCC 65-1 (75-1)
  (3) Load Shed During SBO Event
j. 125 VDC Distribution
  (1) 6A (7A) 125 VDC Battery and Stationary Battery Charger
  (2) Maintenance Battery Charger 6A/7A
  (3) Spare Battery Charger
  (4) 125 VDC Bus 6A (7A)
    (a) Portable Load/Feed Connection Breaker
k. 120 VAC Distribution
  (1) SBO UPS 6B (7B) (Inverter, AST (isolimiter), Manual Bypass)
  (2) 120V AC Panel 6B-1 (7B-1)
l. HVAC Systems
  (1) Diesel Room HVAC
    (a) Exhaust Fans (3)
    (b) Intake and Exhaust Dampers
    (c) Electric Unit Heaters (6)
    (d) Fire Dampers
  (2) Day Tank Room HVAC
    (a) Exhaust Fan and Fire Dampers
  (3) Electrical Equipment Room HVAC
    (a) Exhaust Fans (2)
    (b) Intake and Exhaust Dampers
    (c) Electric Unit Heaters (4)
    (d) Fire Dampers
  (4) Battery Room HVAC
    (a) Condenser
    (b) AHU (Cooling Coil, Heater, Fan)
    (c) Exhaust Fan
    (d) Fire Damper
m. Distribution Control System (DCS) Panel 901(2)-74

49 **ID: QDC.ILT.15474** **Points: 1.00**

Unit 1 and Unit 2 are both at 100% power when an off-site grid disturbance initiates the following sequence of events:

- 0700: Unit 1 reactor scrams and T-12 trips.
- 0721: Unit 2 reactor scrams and T-22 trips.
- 0724: Unit 2 RPV water level is -65 inches.

No operator action has been taken. Complete the following statement:

At time 0725, Bus 13-1 is __(1)__ and Bus 23-1 is __(2)__.

A. (1) de-energized
(2) de-energized

B. (1) de-energized
(2) energized from the Unit 1/2 EDG

C. (1) energized from the Unit 1/2 EDG
(2) de-energized

D. (1) energized from the Unit 1/2 EDG
(2) energized from the Unit 1/2 EDG

Answer: B

Answer Explanation:

Answer: At 0700, the 1/2 EDG will auto-start and load to Unit 1 (Bus 13-1). At 0724, the Unit 1/2 EDG output breaker will open, Bus 13-1 will de-energize and the output breaker to Unit 2 (Bus 23-1) will close. The logic is designed so the 1/2 EDG will load onto the Unit that lost offsite power first. The LOCA signal on Unit 2 overrides this and trips the output breaker of the 1/2 EDG to Unit 1.

Distractor 1 is incorrect: Plausible if candidate assumes that the EDG will run unloaded when there are two LOOP signals. However, the logic is set up so the EDG will run unloaded if there are two LOCA signals.
Distractor 2 is incorrect: Plausible if the student does not realize that a LOCA signal will override a LOOP signal.
Distractor 3 is incorrect: Plausible because both Units require the 1/2 EDG and there is a procedure to supply Bus 13-1 and 23-1 from the 1/2 EDG. However, both 1/2 EDG output breakers will not auto-close on both ECCS buses.

Reference: UFSAR Section 8.3.1.6.2
Reference provided during examination: N/A

Cognitive level: High

Level (RO/SRO): RO
Tier: 2 Group: 1

Question Source: Modified from QDC.ILT.01641
Question History: N/A

10 CFR Part 55 Content: 41.7

Comments: None.

Associated objective(s):

SR-6600-K20 (Freq: LIC=B)
Given an Emergency Diesel Generators operating mode and various plant conditions, EVALUATE the following Emergency Diesel Generators indications/responses and DETERMINE if the indication/ response is expected and normal.
a. Diesel cooling water pump status
b. Generator volts, amps, frequency, kilowatts, and VARS
c. Output breaker position status

264000.K3.02 A.C. electrical distribution (RO=3.9 / SRO=4.0)

50 **ID: QDC.ILT.15595** **Points: 1.00**

Unit 1 is at 100% power and the crew is preparing to parallel the Unit 1 EDG to its vital bus.

- The NSO is preparing to close the EDG output breaker.

To properly close the output breaker, and in accordance with plant procedures, what must the synchroscope indicate when the breaker control switch is taken to CLOSE?

Rotating SLOWLY in the...

A. SLOW/COUNTER-CLOCKWISE direction, synchroscope at the ELEVEN o'clock position.

B. SLOW/COUNTER-CLOCKWISE direction, synchroscope at the TWELVE o'clock position.

C. FAST/CLOCKWISE direction, synchroscope at the ELEVEN o'clock position.

D. FAST/CLOCKWISE direction, synchroscope at the TWELVE o'clock position.

Answer: C

Answer Explanation:

Answer: To synchronize the EDG to its vital bus, the EDG governor is adjusted until the synchroscope is rotating slowly in the fast (clockwise) direction and at the eleven o'clock position.

Distractor 1 is incorrect: Plausible because the synchroscope will be in the slow direction if the EDG is slower than vital bus frequency.
Distractor 2 is incorrect: Combination of distractor 1 and 3.
Distractor 3 is incorrect: Plausible because the control switch is held in the close position until the output breaker closes and the synchroscope stops at the twelve o'clock position.

Reference: QCOP 6600-02 Rev 28
Reference provided during examination: N/A

Cognitive level: Memory

Level (RO/SRO): RO
Tier: 2 Group: 1

Question Source: Modified from Diablo Canyon ILT Bank question
Question History: Diablo Canyon 2005 ILT NRC Exam

10 CFR Part 55 Content: 41.7

Comments: None.

Associated objective(s):

264000.A3.03 Indicating lights, meters, and recorders (RO=3.4 / SRO=3.4)

SR-6600-K20 (Freq: LIC=B)
Given an Emergency Diesel Generators operating mode and various plant conditions, EVALUATE the following Emergency Diesel Generators indications/responses and DETERMINE if the indication/ response is expected and normal.

a. Diesel cooling water pump status
b. Generator volts, amps, frequency, kilowatts, and VARS
c. Output breaker position status

51 **ID: QDC.ILT.15602** **Points: 1.00**

Unit 1 is operating at 100% power with the Control Rod Drive Hydraulic (CRD) System in a normal lineup.

Which of the following is an expected response of the CRD System to a LOSS of Instrument Air?

A. HCU Accumulator pressure will LOWER due to the CRD pump discharge valve (1-301-2A/B) failing closed.

B. Drive water pressure will LOWER due to the in-service CRD Flow Control Valve (1-302-6A/B) failing closed.

C. Control rods will drift IN due to the HCU Directional Control Valves (1-305-121/122/123/124) failing open.

D. The operating CRD pump will TRIP due to the Normal and Emergency Condensate Reject FCVs (1-3303/3304) failing closed.

Answer: B

Answer Explanation:

Answer: The CRD FCV fails closed on a loss of Instrument Air pressure. When the FCV closes, the drive water header differential pressure goes toward zero (downstream of the FCV).

Distractor 1 is incorrect: Plausible if the candidate assumes that CRD pump discharge valve fails closed on a loss of instrument air.
Distractor 2 is incorrect: Plausible if the candidate assumes that the HCU directional control valves are AO like other HCU valves (scram valves).
Distractor 3 is incorrect: Plausible if the candidate assumes that Condensate Reject valves fail closed and that the CCST is not available as a suction source.

Reference: QOA 4700-06 Rev 19, QCOA 0300-06 Rev 6, LF-0302 Rev 10
Reference provided during examination: N/A

Cognitive level: Memory

Level (RO/SRO): RO
Tier: 1 Group: 1

Question Source: Modified from QDC.ILT.04206
Question History: N/A

10 CFR Part 55 Content: 41.7

Comments: None

Associated objective(s):

300000.K3.02 Systems having pneumatic valves and controls (RO=3.3 / SRO=3.4)

SRN-4701-K24 (Freq: LIC=B NF=B) Given an Instrument Air System operating mode and various plant conditions, PREDICT how each supported system will be impacted by the following Instrument Air System failures:

a. Dryer desiccant breakdown/oil coated
b. Loss of instrument air pressure

52 **ID: QDC.ILT.15579** **Points: 1.00**

Both Units are operating at full power with the 1A and 2B Service Water pumps running.

The following annunciator alarms on the 912-1 panel:

- B-3, SERVICE WATER LOW PRESSURE

The Unit 2 ANSO notes that Service Water Pressure as indicated on PI 1/2-3940-4 on the 912-1 panel is 78 psig and slowly lowering.

If this trend continues, which of the following is the NEXT expected plant response?

A. The 1/2A Fire Diesel auto-starts

B. The 1/2B Fire Diesel auto-starts

C. 1B Service Water Pump auto-starts

D. 1/2 Service Water pump auto-starts

Answer: C

Answer Explanation:

Answer: The 1B Service Water pump will auto-start when Service Water header pressure drops to ≤ 75 psig. The 1B Service Water pump is the only Service Water Pump between Unit 1 and Unit 2 that will auto-start.

Distractor 1 is incorrect: Plausible if the candidate assumes that there is not a Service Water pump auto-start feature.
Distractor 2 is incorrect: Plausible if the candidate assumes that there is not a Service Water pump auto-start feature and that the 1/2B Fire Diesel setpoint is higher than the 1/2A.
Distractor 3 is incorrect: Plausible if the candidate assumes that the "shared" Service Water pump is the one that auto-starts.

Reference: QCAN 912-1 B-3 Rev 6
Reference provided during examination: N/A

Cognitive level: High

Level (RO/SRO): RO
Tier: 2 Group: 1

Question Source: Modified from Quad ILT Bank (QDC.ILT.05095)
Question History: N/A

10 CFR Part 55 Content: 41.7

Comments: None
Fire diesels will start as service water provides static pressure to the fire system.

Associated objective(s):

SR-3900-K06 (Freq: LIC=I)
Given a Service Water System annunciator tile inscription, DESCRIBE the condition causing the alarm and any automatic actions which occur when the alarm actuates. EXPLAIN the consequences of the condition if not corrected.

400000.K4.01 Automatic start of standby pump (RO=3.4 / SRO=3.9)

53 **ID: QDC.ILT.15462** **Points: 1.00**

Unit 1 was at full power when a transient occurred.

- The SSMP is injecting 400 gpm into the Unit 1 RPV.

What is the impact on the SSMP system if position indication for MO 1/2-2901-6, SAFE SHUTDOWN MU PMP FCV, lowers to ZERO on FIC 1/2-2940-7?

A. The SSMP will automatically trip.

B. The SSMP discharge relief valve will lift.

C. The SSMP will continue to run with NO available flowpath.

D. MO 1/2-2901-7, THROTTLED TEST VLV, will automatically open.

Answer: A

Answer Explanation:

Answer: If 1/2-2901-6, SAFE SHUTDOWN MU PMP FCV closes, the SSMP will trip as part of its minimum flow protection.

Distractor 1 is incorrect: Plausible if candidate believes that the SSMP is a positive displacement pump.
Distractor 2 is incorrect: Plausible if candidate does not remember the auto trip signal of the FCV < 10% open.
Distractor 3 is incorrect: Plausible if candidate believes that the TEST RETURN VALVE (MO 2901-7) is upstream of the FCV.

Reference: QCOP 2900-02 Rev 20
Reference provided during examination: N/A

Cognitive level: Memory

Level (RO/SRO): RO
Tier: 2 Group: 1

Question Source: ILT Bank (QDC.LORTB.0186)
Question History: N/A

10 CFR Part 55 Content: 41.5

Comments: None.

Associated objective(s):

SR-2900-K09 (Freq: LIC=I)
LIST the signals which cause a SSMP trip including purpose and setpoints.

217000.K5.02 Flow indication (RO=3.1 / SRO=3.1)

54 **ID: QDC.ILT.15530** **Points: 1.00**

Which ONE of the following components is cooled by the Turbine Building Closed Cooling Water (TBCCW) system?

A. Generator H_2 coolers

B. CRD Pump Seal Coolers

C. Control Room HVAC Train B

D. Main Turbine Lube Oil coolers

Answer: B

Answer Explanation:

Answer: The TBCCW system supplies cooling water flow to the CRD pumps.

Distractor 1 is incorrect: Generator H_2 coolers are supplied by the Service Water system.
Distractor 2 is incorrect: Control Room HVAC Train B is supplied by the RBCCW system.
Distractor 3 is incorrect: Main Turbine Lube Oil Coolers are supplied by the Service Water system.

Reference: QCOA 3800-03 Rev 8
Reference provided during examination: N/A

Cognitive level: Memory

Level (RO/SRO): RO
Tier: 2 Group: 2

Question Source: Quad ILT Bank (QDC.ILT.01091)
Question History: N/A

10 CFR Part 55 Content: 41.2 to 41.9

Comments: None

Associated objective(s):

SR-3800-K18 (Freq: LIC=I)
LIST the plant systems which are supported by TBCCW and DESCRIBE the nature of support.

201001.K1.06 Component cooling water systems: Plant-Specific (RO=2.8 / SRO=2.8)

55 **ID: QDC.ILT.15555** **Points: 1.00**

Given the following:

- Reactor power is 80%
- Unit 2 is currently performing a rod pattern adjustment
- "Blocks To Full" is DISABLED on the Rod Worth Minimizer (RWM)

If the Total Steam Flow output signal from Digital Feed Water Level Control (DFWLC) fails to 8% rated steam flow, how is control rod motion affected?

The RWM will...

A. apply insert and withdraw blocks to ALL rods.

B. apply rod blocks in accordance with the loaded rod sequence.

C. allow ALL rod motion independent of the loaded rod sequence.

D. allow continued control rod motion only by single notch increments.

Answer: B

Answer Explanation:

Answer: If power is greater than the LPSP (10% RTP) and EITHER of the DFWLC input signals (feed flow or steam flow) fail low, the RWM considers power to be below 10% and all blocks are automatically enforced.

Distractor 1 is incorrect: This would be the correct answer if the RWM power supply failed and was subsequently returned with the RWM switch in Normal.
Distractor 2 is incorrect: This would be correct if the steam flow signal did not fail below the LPSP.
Distractor 3 is incorrect: Single notch restrictions are only enforced in the Rod Exercise Mode of the RWM.

Reference: QCOP 0207-01 Rev 15
Reference provided during examination: N/A

Cognitive level: High

Level (RO/SRO): RO
Tier: 2 Group: 2

Question Source: Hope Creek ILT Bank (Q53252)
Question History: 2002 Hope Creek ILT NRC Exam

10 CFR Part 55 Content: 41.7

Comments: None

Associated objective(s):

201006.K3.01 Reactor manual control system: P-Spec(Not-BWR6) (RO=3.2 / SRO=3.5)

SR-0207-K23 (Freq: LIC=B)
Given a Rod Worth Minimizer operating mode and various plant conditions, PREDICT how the Rod Worth Minimizer and supported systems will be impacted by the following failures:

a. Loss of single RPIS input signal
b. Loss of multiple RPIS input signals
c. Loss of FWLV inputs (steam/feed flow)
d. Loss of computer UPS
e. Rod drift
f. Mispositioned control rod

56 **ID: QDC.ILT.15559** **Points: 1.00**

Unit 1 is performing a Reactor startup per QCGP 1-1.

Given the following:

- Turbine load is currently 50%
- LOAD SET is set at 60%
- LOAD LIMIT is set at 100%
- All other turbine controls are normal

If the Unit 1 Master Recirculation Flow Controller fails high, which of the following is the correct DEHC response as Turbine load increases?

Turbine Control Valves will...

A. open. If 90% Turbine load is reached, the Turbine will trip on Power Load Unbalance (PLU).

B. stop opening if load reaches 60%. The Bypass Valves will NOT open even if needed for Reactor pressure control.

C. stop opening if load reaches 60%. The Bypass Valves will then open if needed for Reactor pressure control.

D. stop opening if load reaches 100%. The Bypass Valves will then open if needed for Reactor pressure control.

Answer: C

Answer Explanation:

Answer: As Reactor power rises, Turbine loading will rise until it reaches 60% (Load Set). Since the Max Combined Flow Limit is normally set at 134%, the bypass valves will open to control Reactor pressure.

Distractor 1 is incorrect: PLU is a turbine trip, however it is a 40% difference between Generator Stator amps and Turbine crossover steam pressure. Stator amps will track with the Turbine load in this situation.
Distractor 2 is incorrect: Plausible if the candidate does not recognize that the MCFL is set well above 100% and that the bypass valves will not open.
Distractor 3 is incorrect: Plausible if the candidate assumes that only the Turbine Load Limit governs the load in this situation.

Reference: QCGP 1-1 Rev 78, LIC-5652a Rev 2
Reference provided during examination: N/A

Cognitive level: High

Level (RO/SRO): RO
Tier: 2 Group: 2

Question Source: Quad ILT Bank (QDC.ILT.627988)
Question History: N/A

10 CFR Part 55 Content: 41.7

Comments: None

Associated objective(s):

SR-5652a-K20 (Freq: LIC=B) Given a Main Turbine Control - EHC Logic System operating mode and various plant conditions, EVALUATE the following Main Turbine Control - EHC Logic System indications/responses and DETERMINE if the indication/ response is expected and normal.

a. Main steam pressure
b. Pressure setpoint A/B
c. Turbine speed
d. Load set percent
e. Bypass jack open demand
f. System status lights
   (1) Speed
   (2) Pressure control
   (3) Bypass valve position
   (4) Load Limit Limiting
   (5) 901(2)-31 trip/status indicating lights
g. EHC power supplies (PMG/Inst Bus fed) voltage

202002.K3.04 Reactor/turbine pressure regulation system (RO=2.9 / SRO=3.1)

57 **ID: QDC.ILT.15554** **Points: 1.00**

The Reactor Water Cleanup System (RWCU) is in normal operation at full power. Panel 901-4 indications are provided below.

Based on the indications provided, in which position would the RWCU LOOP TEMP SELECT switch, 1-1290-28, be?

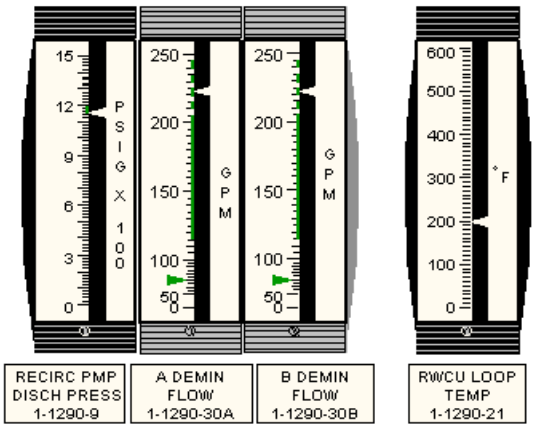

RWCU LOOP
TEMP SELECT
1-1290-28

POINT	RWCU WATER TEMPERATURES
1	WTR TO RWCU SYSTEM
2	REGEN HX OUTLET
3	NON-REGEN HX OUTLET
4	RETURN TO FEEDWATER LINE
5	SPARE
6	SPARE

A. 1

B. 2

C. 3

D. 4

Answer: B

Answer Explanation:

Answer: The provided picture is with the switch in position 2. Meter 1-1290-21 is reading approximately 200ºF. The regenerative heat exchanger (RHX) cools the reactor water from 540-550ºF to approximately 210-220 ºF. Therefore, meter 1-1290-21 is indicating REGEN HX OUTLET, Point 2.

Distractor 1 is incorrect: Normal Pt 1 value is 540-550 ºF.
Distractor 2 is incorrect: Normal Pt 3 value is 90-110 ºF.
Distractor 3 is incorrect: Normal Pt 4 value is 450ºF.

Reference: LF-1200 Rev.14
Reference provided during examination: N/A

Cognitive level: High

Level (RO/SRO): RO
Tier: 2 Group: 2

Question Source: Quad ILT Bank (QDC.ILT.627856)
Question History: N/A

10 CFR Part 55 Content: 41.7

Comments: None

Associated objective(s):

SR-1200-K20 (Freq: LIC=B) Given a Reactor Water Cleanup System operating mode and various plant conditions, EVALUATE the following Reactor Water Cleanup System indications/responses and DETERMINE if the indication/ response is expected and normal:

a. Control Room
   (1) RWCU recirc pump discharge pressure
   (2) Filter-demin flow
   (3) System temperatures
   (4) Reject flowrate
   (5) RWCU conductivities and dissolved O2
   (6) RWCU recirc pump status
   (7) MOV and AOV positions
b. Local
   (1) RWCU recirc pump suction and differential pressure
   (2) Filter-demin flow
   (3) Filter-demin inlet, outlet and differential pressure
   (4) Regenerative heat exchanger inlet, outlet and differential pressure
   (5) Non-regenerative heat exchanger outlet and differential pressure
   (6) Post-strainer differential pressure
   (7) Reactor Building Sample Panel (conductivity/O2/pH)
   (8) RWCU recirc pump status
   (9) Hold pump status
   (10) Hold pump suction and discharge pressure
   (11) MOV and AOV positions
   (12) Cleanup phase separator levels
   (13) Non-regenerative heat exchanger temperature
   (14) RWCU recirc pump temperature
   (15) RWCU Filter-Demin Panel indicating lights (control power, filter status)
   (16) Flow glasses (vessel vent, dome drain, plenum drain, pump vent, pump drain)
   (17) RWCU recirc pump flow
   (18) RWCU area temperatures / RTD status (2201(2)-77A/B)

204000.A3.05 Reactor water temperature (RO=2.8 / SRO=2.8)

58 **ID: QDC.ILT.15553** **Points: 1.00**

Unit 1 was at 100% power when a LOCA occurred.

- The Residual Heat Removal (RHR) and RHR Service Water (RHRSW) system is currently operating in the TORUS COOLING MODE per QCOP 1000-30, Post-Accident RHR Operation.

What system(s) is(are) available for RHR pump motor and motor bearing cooling?

The RHR...

A. Room Cooler ONLY.

B. supply to the primary side of the RHR Pump Motor Cooler ONLY.

C. Room Cooler and the RBCCW supply to the secondary side of the RHR Pump Motor Cooler.

D. Room Cooler and the RHRSW supply to the secondary side of the RHR Pump Motor Cooler.

Answer: D

Answer Explanation:

Answer: When the RHRSW system is running, RHRSW is supplied to the secondary side of the RHR Pump Motor Cooler. The RHR Room cooler also supplies cooling for the motor.

Distractor 1 is incorrect: Plausible because other ECCS pumps do not require RHRSW for motor cooling.
Distractor 2 is incorrect: Plausible if the candidate does not realize that the DGCW pumps have started and a cooling medium is available to the room coolers.
Distractor 3 is incorrect: RBCCW is a plausible cooling water system for a Reactor Building load.

Reference: M-39 Sheet 3 Rev E, QCOA 1000-06 Rev 7, QCOP 1000-30 Rev 23, LNF-1000 Rev 12
Reference provided during examination: N/A

Cognitive level: Memory

Level (RO/SRO): RO
Tier: 2 Group: 2

Question Source: Quad ILT Bank (QDC.ILT.627817)
Question History: N/A

10 CFR Part 55 Content: 41.7

Comments: None

Associated objective(s):

SR-1000-K15 (Freq: LIC=I)
DESCRIBE the operation of the following principle RHR/RHRSW system components:
a. RHR pump seal
b. RHR minimum flow valve
c. RHR room cooler
d. RHRSW cubicle cooler
e. RHR check valve AO-1001-68A/B
f. RHRSW pump vent valve

219000.K4.06 Pump motor cooling: Plant-Specific (RO=2.7 / SRO=2.7)

59 **ID: QDC.ILT.15551** **Points: 1.00**

Unit 1 is at 100% power when there is a loss of TB MN Bus 1A-1.

Which of the following describes the response of AO 1-203-1A, 1A INBD MSIV, and the reason for that response?

The 1A INBD MSIV will...

A. remain open because even though one solenoid repositions, the other solenoid continues to supply air to the MSIV.

B. remain open because TB MN Bus 1A-1 does NOT supply power to an inboard MSIV solenoid.

C. remain open because the air accumulator for that MSIV continues to supply air to the actuator.

D. close because the solenoids are in series and either one deenergizing will vent the air supply to the MSIV.

Answer: A

Answer Explanation:

Answer: On a loss of one solenoid (AC or DC), the other continues to align the air supply to hold the MSIV open.

Distractor 1 is incorrect: Plausible because most equipment in the drywell is supplied by AC power. TB MN Bus 1A-1 supplies power only to the inboard MSIVs.
Distractor 2 is incorrect: The accumulator is used to assist the spring in closing the MSIV, not maintaining the MSIV open.
Distractor 3 is incorrect: The MSIV solenoids (AC and DC) do not vent the air supply (like RPS). When the solenoids deenergize, they align the air supply to close the MSIV.

Reference: LIC-0250 Rev 13
Reference provided during examination: N/A

Cognitive level: Memory

Level (RO/SRO): RO
Tier: 2 Group: 2

Question Source: River Bend ILT Bank
Question History: 2003 River Bend ILT NRC Exam

10 CFR Part 55 Content: 41.5

Comments: None

Associated objective(s):

239001.K5.06 Air operated MSIV's (RO=2.8 / SRO=2.9)

SR-0250-K23 (Freq: LIC=B)
Given a Main Steam System operating mode and various plant conditions, PREDICT how the Main Steam System will be impacted by the following support system failures:
a. Loss of RPS
b. Loss of 125 vdc
c. Loss of instrument air OR drywell pneumatics
d. Loss of MSIV room coolers

60 **ID: QDC.ILT.15477** **Points: 1.00**

Unit 1 was at 100% reactor power when a leak developed in the Main Condenser boot.

- A manual Reactor scram was inserted and the Reactor Mode switch was placed in SHUTDOWN.
- Main Condenser backpressure is currently 7" Hg and rising at a rate of 2" Hg per minute.

If backpressure continues to rise at this rate, which of the following describes RPV pressure and control nine (9) minutes later?

(Assume NO further operator action is taken.)

A. Bypass Valves will open to control RPV pressure at 920 psig.

B. Turbine Control Valves will open to control RPV pressure at 1000 psig.

C. Turbine Control Valves and Bypass Valves will be closed and RPV pressure will rise until relief valves open at 1115 psig.

D. Turbine Control Valves and Bypass Valves will be closed and RPV pressure will rise until safety valves open at 1240 psig.

Answer: C

Answer Explanation:

Answer: 7" Hg + ((9 minutes) X (2" Hg/minute)) = 25" Hg backpressure

The turbine trips at 10" Hg backpressure and the Bypass valves will be interlocked closed at 23" Hg backpressure. Decay heat will cause Reactor pressure to rise until the lowset Relief Valves open at 1115 psig to control Reactor pressure.

Distractor 1 is incorrect: Plausible if candidate does not recognize that Bypass Valves are interlocked closed at 23" Hg backpressure.
Distractor 2 is incorrect: Plausible if candidate does not recognize that the turbine trips and control valves close at 20" Hg vacuum.
Distractor 3 is incorrect: Plausible if candidate assumes that decay heat production will exceed the capacity of the relief valves.

Reference: QOA 3300-02
Reference provided during examination: N/A

Cognitive level: High

Level (RO/SRO): RO
Tier: 2 Group: 2

Question Source: New
Question History: N/A

10 CFR Part 55 Content: 41.7

Comments: None.

Associated objective(s):

SR-3200-K24 (Freq: LIC=B)
Given a Condensate/Feedwater System operating mode and various plant conditions, PREDICT how each supported system will be impacted by the following Condensate/Feedwater System failures:
a. Loss of condensate reject flow
b. Feed header rupture inside the drywell
c. Loss of vacuum
d. Condenser tube rupture

241000.K6.05 Condenser vacuum (RO=3.4 / SRO=3.4)

61 **ID: QDC.ILT.15561** **Points: 1.00**

Unit 1 is at 100% power.

If MO 1-3303, COND DEMIN BYPASS VLV, is opened, which of the following states the TREND of:

1. PI 1-3340-49, COND BOOST PMP SUCT PRESS, on the 901-6 panel?
2. CR 1-3340-8, CONDENSATE CONDUCTIVITY, on the 901-7 panel?

A. 1. Rise
2. Lower

B. 1. Lower
2. Rise

C. 1. Lower
2. Lower

D. 1. Rise
2. Rise

Answer: D

Answer Explanation:

Answer: If the Condensate Demin bypass valve is opened, d/p across the demineralizers will drop. Since there is less d/p across the demins, Condensate Booster pump suction pressure will rise. When the demins are bypassed, total dissolvable solids (TDS) will rise and conductivity will increase.

Distractor 1 is incorrect: Plausible if the candidate assumes that the presence of TDS will raise the resistivity of a solution. Therefore, conductivity would lower.
Distractor 2 is incorrect: Plausible if the candidate assumes that the bypass valve is downstream of the Condensate Booster pumps.
Distractor 3 is incorrect: Combination of distractor 1 and 2.

Reference: QCAN 901(2)-7 H-12 Rev 4, LIC-3200 Rev 12
Reference provided during examination: N/A

Cognitive level: High

Level (RO/SRO): RO
Tier: 2 Group: 2

Question Source: New
Question History: N/A

10 CFR Part 55 Content: 41.5

Comments: None

Associated objective(s):

256000.A1.08 System water quality (RO=2.7 / SRO=2.9)

SR-3200-K21 (Freq: LIC=B)
Given a Condensate/Feedwater System operating mode and various plant conditions, PREDICT how key Condensate/Feedwater System/ plant parameters will respond to manipulation of the following Condensate/Feedwater System local/remote controls:

a. Condensate/condensate booster pump control switches
b. Condensate/condensate booster pump selector switch
c. Condensate make-up pump control switches
d. Hotwell level control mode selector switch
e. Normal/emergency make-up potentiometers
f. Normal/emergency reject potentiometers
g. RFP control switches
h. RFP selector switch
i. RFP motor vent fan control switches
j. Vent panel 2251(2)-25X controls
k. RFP aux oil pump control switches
l. Motor/air operated valve control switches
   (1) Main condenser vacuum breaker (MO 4901)
   (2) SJAE condenser bypass (MO 3304)
   (3) Condensate demineralizer bypass (MO 3303)
   (4) Condensate recirc FCV 3401
   (5) LP heater inlet/outlet valves (MO 3401A/B/C, MO 3402 A/B/C)
   (6) LP heater bypass (MO 3403)
   (7) RFP discharge valves (MO 3201A/B/C)
   (8) RFP recirc valves (AO 3201A/B/C)
   (9) HP heater inlet/outlet valves (MO 3202A/B/C, MO 3204 A/B/C)
   (10) HP heater bypass (MO 3203)
   (11) Feedwater regulator isolation valves (MO 3206A/B)
   (12) Feedwater header isolations (MO 3205A/B)

62 **ID: QDC.ILT.15478** **Points: 1.00**

Given the following:

- Unit 1 is at 75% rated thermal power
- 1A and 1C Reactor Feed pumps (RFP) are in-service
- 1B RFP is selected for standby
- 1A, 1B and 1C Condensate pumps are in service
- 1D Condensate pump is out-of-service

If the 1C Condensate pump trips:

(1) Predict the plant response.
(2) What operator action(s) must be taken?

A. (1) The 1C RFP will trip due to the 1C Condensate pump breaker tripping.
(2) Verify that the 1B RFP auto-starts to maintain Reactor water level.

B. (1) Both Reactor Recirc pumps run back to 70% rated core flow.
(2) Take the 1B RFP out of standby and trip the 1A RFP to maintain RFP suction pressure.

C. (1) RFP suction pressure will lower and FRVs will open.
(2) Initiate an emergency power reduction to maintain RFP suction pressure and Reactor water level.

D. (1) Both Reactor Recirc pumps run back to 32% pump speed.
(2) Scram the Reactor if core oscillations are observed in SRM period or LPRM/APRM levels.

Answer: C

Answer Explanation:

Answer: With two Condensate pumps running, RFP suction pressure will lower and be unstable. When RFP suction pressure drops, FRVs will have to open to maintain feedwater flow and level. An emergency power reduction will have to be performed to lower power and maintain RFP suction pressure stable.

Distractor 1 is incorrect: Plausible because the 1C RFP will auto trip on <125 psig suction pressure and the Condensate pump breaker status is used for other interlocks.
Distractor 2 is incorrect: The Recirc pumps will not run back because only 2 RFPs were in-service and only 3 Condensate pumps were in service. If a RFP is tripped with the reactor at 75% power, level will lower (due to insufficient feedwater) and the reactor will scram.
Distractor 3 is incorrect: The Recirc pumps will run back to 32% speed when feedflow drops below 20% rated for 15 seconds.

Reference: QCOA 3300-01 Rev 19
Reference provided during examination: N/A

Cognitive level: High

Level (RO/SRO): RO

Tier: 2 Group: 2

Question Source: Modified from Dresden NRC-9738
Question History: Dresden ILT NRC Exam 2006

10 CFR Part 55 Content: 41.7

Comments: None.

Associated objective(s):

259001.A2.03 Loss of condensate pump(s) (RO=3.6 / SRO=3.6)

SR-3200-K26 (Freq: LIC=B)
EVALUATE given key Condensate/Feedwater System parameter indications and/or responses depicting a system specific abnormality/failure and DETERMINE a course of action to correct or mitigate the following abnormal condition(s):
a. Loss of instrument air
b. Loss of condensate reject flow
c. Loss of TBCCW
d. Loss of vacuum
e. Condenser tube rupture

63 **ID: QDC.ILT.15479** **Points: 1.00**

Unit 1 is at 100% reactor power.

Which of the following, if de-energized, will result in a loss of the 1B Main Steam Line radiation monitor?

A. Essential Service Bus

B. Instrument Bus

C. RPS A

D. RPS B

Answer: A

Answer Explanation:

Answer: Main Steamline Rad Monitors B and D are fed from ESS.

Distractor 1 is incorrect: The Main Steam Line rad monitor recorder is fed from the Instrument Bus.
Distractor 2 is incorrect: Mechanical Vacuum Pump trip logic (associated with the MSL rad monitors) is fed from RPS B.
Distractor 3 is incorrect: The A and C main steam line rad monitors are fed from RPS A.

Reference: UFSAR Section 11.5.2.6, Rev 9
Reference provided during examination: N/A

Cognitive level: Memory

Level (RO/SRO): RO
Tier: 2 Group: 2

Question Source: ILT Bank (QDC.03-01 NRC RO 63)
Question History: 2003 Quad Cities NRC Exam

10 CFR Part 55 Content: 41.7

Comments: None

Associated objective(s):

SR-1701-K19 (Freq: LIC=I)
LIST the plant systems which support Process Radiation Monitoring System and DESCRIBE the nature of support. (Includes power supplies)

272000.K2.01 Main steamline radiation monitors (RO=2.5 / SRO=2.8)

64 **ID: QDC.ILT.15576** **Points: 1.00**

Unit 2 is at 100% power when a steam leak develops on the body-to-bonnet joint of AO 2-203-2A, 2A OUTBD MSIV.

Which of the following alarms is expected for the above conditions?

A. 902-4 A-12, RWCU AREA TEMP A HI

B. 912-5 F-4, DRYWELL 2 CLR SUPPLY AIR HI TEMP

C. 902-3 E-16, VALVE LEAK DET SYS HIGH TEMP

D. 902-3 H-2, AREA HI TEMP STEAM LEAK DETECTION

Answer: D

Answer Explanation:

Answer: The 2A Outboard MSIV is located in the Unit 2 MSIV room. Room RTDs input to the TR 2-1290-27 at Panel 902-21. When this TR alarms, H-2 on the 902-3 panel alarms.

Distractor 1 is incorrect: Plausible because this alarm will come in for all RWCU high energy line breaks (HELB) except breaks in the MSIV Room. Candidate may assume that high MSIV room temperature is an input to 902-4 A-12 since it is a Group 3 RWCU isolation signal.
Distractor 2 is incorrect: Plausible because the half of the MSIVs are in the Drywell.
Distractor 3 is incorrect: Plausible because the alarm indicates leakage from a different valve in the Main Steam system (Relief valves).

Reference: QOA 900-3 H-2 Rev 6, QCOS 0201-08 Rev 47, M-60 Sheet 1 Rev AS, M-60 Sheet 2 Rev BD
Reference provided during examination: N/A

Cognitive level: High

Level (RO/SRO): RO
Tier: 2 Group: 2

Question Source: New
Question History: N/A

10 CFR Part 55 Content: 41.7

Comments: None

Associated objective(s):

SR-0250-K20 (Freq: LIC=B)
Given a Main Steam system operating mode and various plant conditions, EVALUATE the following Main Steam system indications/responses and DETERMINE if the indication/ response is expected and normal.

a. MSIV position
b. MSL drain valve position
c. Individual MSL flow / Total steam flow
d. Main steam pressure / Throttle press
e. Steam tunnel temperature
f. Safety valve position (temperature/acoustic monitor)
g. MSIV solenoid indication lights
h. MSIV air pilot valve temperatures
i. MSL differential pressures
j. MSIV room cooler status

290001.A4.02 Reactor building area temperatures: Plant-Specific (RO=3.3 / SRO=3.4)

65 **ID: QDC.ILT.15562** **Points: 1.00**

Under certain ATWS conditions, the EOPs direct the operators to deliberately lower Reactor water level to -35".

Which of the following describes the REASON this is done?

A. Uncovering the steam separators INCREASES natural circulation flow which maintains core cooling.

B. Uncovering the feedwater spargers DECREASES core inlet subcooling which suppresses core instabilities.

C. Reducing the volume of water in the Reactor DECREASES steam production which terminates ADS valve cycling.

D. Reducing the volume of water in the Reactor INCREASES the circulation of SBLC solution in the core region which lowers Reactor power.

Answer: B

Answer Explanation:

Answer: Deliberately lowering RPV water level sufficiently below the feedwater spargers significantly reduces core inlet subcooling and subsequently increases the void fraction of the core. This suppresses core instabilities.

Distractor 1 is incorrect: Uncovering the steam separators decreases natural circulation.
Distractor 2 is incorrect: Although steam production will be reduced, QGAs direct the manual actuation of relief valves to prevent ADS valve cycling.
Distractor 3 is incorrect: Without adequate forced or natural circulation, boron accumulates in the bottom of the vessel.

Reference: L-QGA101 Rev 7
Reference provided during examination: N/A

Cognitive level: Memory

Level (RO/SRO): RO
Tier: 2 Group: 2

Question Source: Susquehanna ILT Bank (INPO ID#25836)
Question History: Susquehanna 2003 ILT NRC Exam

10 CFR Part 55 Content: 41.10

Comments: None

Associated objective(s):

SR-0001-K61 (Freq: LIC=B)
Given QGA 101, 'RPV Control (ATWS)', EXPLAIN the reasons for the actions.

290002.2.4.06 Knowledge of EOP mitigation strategies. (RO=3.7 / SRO=4.7)

66 **ID: QDC.ILT.15544** **Points: 1.00**

Which of the following **MEET** the ACTIVE license maintenance requirements for a Reactor Operator (RO) outlined in OP-AA-105-102, NRC Active License Maintenance?

Performing the duties of the...

(1) Unit RO for seven 8-hour shifts in a calendar quarter.
(2) Unit RO for four 12-hour shifts in a calendar quarter.
(3) Unit Assist RO for seven 8-hour shifts in a calendar quarter.
(4) Unit Assist RO for four 12-hour shifts in a calendar quarter.

(Consider each case SEPARATELY.)

A. 1 ONLY

B. 1 and 2 ONLY

C. 1 and 3 ONLY

D. 1, 2, 3 and 4

Answer: C

Answer Explanation:

Answer: RO licenses by performing the duties of the Unit RO and/or Unit Assist RO for a minimum of seven 8-hour or five 12-hour shifts per calendar quarter.

Distractor 1 is incorrect: Plausible if candidate believes that only the RO position counts.
Distractor 2 is incorrect: Combination of 1 and 3.
Distractor 3 is incorrect: Plausible if candidate believes that four 12-hour shifts count.

Reference: OP-AA-105-102 Rev 9
Reference provided during examination: N/A

Cognitive level: Memory

Level (RO/SRO): RO
Tier: 3 Group: N/A

Question Source: Modified from QDC.LWQ.245829
Question History: N/A

10 CFR Part 55 Content: 41.10

Comments: None

Associated objective(s):

2.1.04 Knowledge of individual licensed operator responsibilities related to shift staffing, such as medical requirements, “no-solo” operation, maintenance of active license status, 10CFR55, etc. (RO = 3.3 / SRO = 3.8)

SRL-OPS-K6 (Freq: LIC=I NF=I) DESCRIBE the requirements to maintain an Active License per OP-AA-105-101 and OP-AA-105-102.

67 **ID: QDC.ILT.15545** **Points: 1.00**

If the Unit 1 Nuclear Station Operator (NSO) is directing a surveillance from the Control Room and a step requires an Equipment Operator (EO) to operate a valve LOCALLY.

How would this be recorded on the NSO's master surveillance sheet?

A. The NSO enters their initials ONLY.

B. The NSO enters the EO's initials ONLY.

C. The EO enters their initials ONLY after the surveillance is completed.

D. The NSO enters the EO's initials followed by a slash (/) and then the NSO's initials.

Answer: D

Answer Explanation:

Answer: If a step sign-off is made by someone other than the Performer, then indicate both the Procedure Reader and the Performer in the sign off. Indicate in the sign off who performed the action followed by a slash (/) and then the reader who signed off the step. Example: Equipment Operator DM tells NSO JB that the valve is closed. The NSO initials the valve is closed as: DM/JB.

Distractor 1 is incorrect: Plausible because if the action was performed by the NSO, they would enter their initials only.
Distractor 2 is incorrect: Plausible because if the EO had the Master Surveillance sheet, they would enter their initials only.
Distractor 3 is incorrect: Plausible if the candidate does not recognize that placekeeping is required immediately after a step is complete.

Reference: HU-AA-104-101 Rev 3
Reference provided during examination: N/A

Cognitive level: Memory

Level (RO/SRO): RO
Tier: 3 Group: N/A

Question Source: Quad Cities ILT Bank (QDC.LN.00338)
Question History: N/A

10 CFR Part 55 Content: 41.10

Comments: None

Associated objective(s):

2.1.18 Ability to make accurate, clear, and concise logs, records, status boards, and reports. (RO=3.6 / SRO= 3.8)

SRNL-REC-K3 (Freq: LIC=B NF=B)
STATE the operator action required while entering information into plant logs or records when:

a. An equipment deficiency is observed
b. An incorrect entry is made
c. An entry is made after the fact (late)
d. Other than direct observation is utilized

68 **ID: QDC.ILT.15587** **Points: 1.00**

The crew is implementing a tagout for the Unit 1 Drywell Pneumatic system and the control switch for AO 1-4721, (DW PNEU) SUCT VLV at panel 901-4 is in the normal-after-open position.

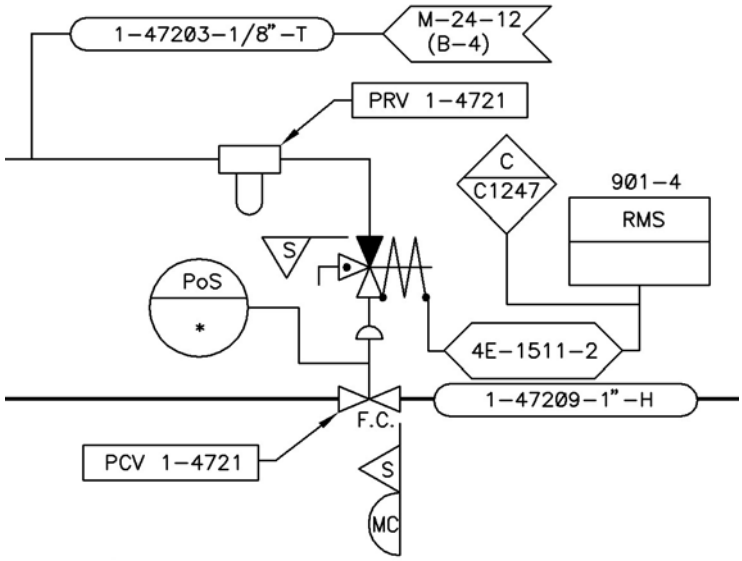

Using the above figure taken DIRECTLY from P&ID M-24 Sheet 13, which ONE of the following predicts how the valve and actuator will respond if power to the solenoid valve is removed?

(Assume the 3-way solenoid valve is normally ENERGIZED)

- AO 1-4721 will __(1)__.
- Air will be __(2)__ the AO 1-4721 actuator.

A. (1) stroke closed
(2) vented off of

B. (1) stroke closed
(2) supplied to

C. (1) remain open
(2) supplied to

D. (1) remain open
(2) vented off of

Answer: A

Answer Explanation:

Answer: The candidate must know that valves on M-prints are shown in their normal position. Therefore, AO 1-4721 is normally open. Since the valve is fail closed on a loss of air, the valve is air to open. Since the suction valve is normally open, the solenoid position shown must be the de-energized position. When deenergized, the solenoid vents air from the actuator and the valve closes.

Distractor 1 is incorrect: Plausible if the candidate assumes the solenoid repositions from shown and the valve repositions from shown.
Distractor 2 is incorrect: Plausible if the candidate assumes that the solenoid repositions from shown but that the valve is air-to-open.
Distractor 3 is incorrect: Plausible if the candidate assumes that the solenoid and valve are shown in a position corresponding to a deenergized solenoid.

Reference: M-24 Sheet 13 Rev H, QOA 7000-01 Rev 31
Reference provided during examination: N/A

Cognitive level: High

Level (RO/SRO): RO
Tier: 3 Group: N/A

Question Source: Modified from Hatch ILT Bank question
Question History: Hatch 2009 ILT NRC Exam

10 CFR Part 55 Content: 41.10

Comments: None

Associated objective(s):

2.2.15 Ability to determine the expected plant configuration using design and configuration control documentation, such as drawings, lineups, tagouts, etc. (RO=3.9 / SRO=4.3)

SRNL-MPR-K08 (Freq: LIC=I NF=B)
Given a Mechanical Drawing:
a. Interpret all the symbols used in a piping system.
b. Identify equipment in a piping system.
c. Follow a system flow path.
d. Identify the system number, unit number, and size of piping.
e. Determine a component's failure position.
f. Identify a component's EPN number.

69 **ID: QDC.ILT.15546** **Points: 1.00**

Which ONE of the following describes the basis for the Minimum Critical Power Ratio (MCPR) Safety Limit?

A. Ensures that 1% plastic strain on the cladding does NOT occur during power operations.

B. Ensures that the fuel design limit of 280 cal/gm is NOT exceeded during a Control Rod drop accident.

C. Ensures that more than 99.9% of the fuel rods in the core avoid transition boiling during operational transients.

D. Ensures that the peak cladding temperature following the postulated design basis LOCA will NOT exceed 2200°F.

Answer: C

Answer Explanation:

Answer: By keeping all fuel bundle MCPRs greater than the safety limit, more than 99.9% of the fuel rods in the core are expected to avoid transition boiling

Distractor 1 is incorrect: This is the basis for the LHGR limit.
Distractor 2 is incorrect: This is the basis for the Rod Worth Minimizer instrumentation.
Distractor 3 is incorrect: This is the basis for the MAPLHGR limit.

Reference: QOS 0005-03 Rev 28
Reference provided during examination: None

Cognitive level: Memory

Level (RO/SRO): RO
Tier: 3 Group: N/A

Question Source: Browns Ferry ILT Bank (OPLI71.087 063)
Question History: Browns Ferry 07 ILT NRC Exam

10 CFR Part 55 Content: 41.5, 41.7

Comments: None.

Associated objective(s):

2.2.25 Knowledge of bases in technical specifications for limiting conditions for operations and safety limits. (RO=3.2 / SRO=4.2)

SR-0800-K28 (Freq: LIC=B)
For each of the Nuclear Fuel thermal limits:
a. STATE the purpose of the limit
b. DESCRIBE the mode of fuel failure for the limit
c. DESCRIBE how and why the limit changes with changes in various core parameters

70 **ID: QDC.ILT.15564** **Points: 1.00**

What impact does losing 125 VDC control power have on a CLOSED 4KV safety-related load breaker?

A. Prevents remote and local breaker operation. Breaker protective relaying is REMOVED.

B. Prevents remote breaker operation and breaker protective relaying is REMOVED. Local manual trip capability remains AVAILABLE.

C. Prevents remote breaker operation. Breaker protective relaying and local manual trip capability remain AVAILABLE.

D. Prevents remote and local breaker operation. Breaker protective relaying remains AVAILABLE.

Answer: B

Answer Explanation:

Answer: Control power is necessary to electrically operate the breaker remotely. Since the breaker is closed, the trip coils are charged and trip capability remains using the local pushbutton (mechanical trip). The protective relaying requires control power to function.

Distractor 1 is incorrect: Plausible if the candidate does not realize that the opening springs are charged when the breaker is closed.
Distractor 2 is incorrect: Plausible if the candidate assumes that the protective relaying is from AC power within the cubicle.
Distractor 3 is incorrect: Combination of distractor 1 and 2.

Reference: LN-6500 Rev 13
Reference provided during examination: N/A

Cognitive level: Memory

Level (RO/SRO): RO
Tier: 3 Group: N/A

Question Source: Modified from QDC.LN.6500K23003
Question History: N/A

10 CFR Part 55 Content: 41.7

Comments: None

Associated objective(s):

SRN-6500-K23 (Freq: LIC=B NF=B) Given a 4KV / 480 VAC Distribution Systems operating mode and various plant conditions, PREDICT how the 4KV / 480 VAC Distribution Systems will be impacted by the following support system failures:

a. Loss of 125 VDC control power
b. Turbine/generator trip
c. Loss of 345KV bus

2.2.37 Ability to determine operability and/or availability of safety related equipment. (RO=3.6 / SRO=4.6)

71 **ID: QDC.ILT.15547** **Points: 1.00**

Unit 1 is at 75% power with a river discharge in progress per QOP 2000-25, Discharging To The River From The River Discharge Tank Using The River Discharge Pump.

Which of the following operator actions, if performed, will **NOT** affect the radioactive release RATE to the river?

A. Securing a Service Water pump.

B. Starting a Circulating Water pump.

C. Repositioning the MO 1/2-4405-6, ICE MELT VALVE

D. Pumping the Drywell Equipment Drain Sump (DWEDS).

Answer: D

Answer Explanation:

Answer: Pumping the DWEDS will result in water entering the Waste Collector Tank (vice the River Discharge Tank).

Distractor 1 is incorrect: Inputs into the dilution flow calculation.
Distractor 2 is incorrect: Inputs into the dilution flow calculation.
Distractor 3 is incorrect: Inputs into the dilution flow calculation.

Reference: QOP 2000-25 Rev 42, LNF-2000 Rev 7
Reference provided during examination: N/A

Cognitive level: Memory

Level (RO/SRO): RO
Tier: 3 Group: N/A

Question Source: New
Question History: N/A

10 CFR Part 55 Content: 41.11

Comments: None

Associated objective(s):

SR-2000-K28 (Freq: LIC=I)
EXPLAIN the reasons for the following Radwaste Subsystems operating limits and precautions.
a. Changing dilution flow during river discharges
b. Radwaste Effluent Rad Monitor operation during river discharge
c. Radiological precautions prior to sludge transfer
d. Need for caution while operating RHR-Radwaste-condensate crosstie manual valves
e. TS and administrative limits for drywell identified/unidentified leakage

2.3.11 Ability to control radiation releases. (RO=3.8 / SRO=4.3)

72 **ID: QDC.ILT.15566** **Points: 1.00**

Unit 2 is at 100% power when a plant equipment emergency develops inside a Radiologically Controlled Area (RCA).

Which of the following requirements MUST be followed by the Operator responding to this emergency?

A. Wear a TLD and an Electronic Dosimeter.

B. Do NOT cross over/under barriers to enter contaminated areas.

C. Wear protective clothing outlined in the Radiation Work Permit (RWP).

D. Use the Access Control Turnstiles to enter the Radiological Controlled Area (RCA).

Answer: A

Answer Explanation:

Answer: Per RP-QC-1002, standard dosimetry requirements are NOT allowed to be waived for equipment failure emergencies. Emergency Use Electronic Dosimeters are staged at the Trackway 1 Access Control Point.

Distractor 1 is incorrect: The responder may enter the contaminated area by crossing over/under the barrier.
Distractor 2 is incorrect: When responding to plant equipment emergencies the clothing requirements can be determined by the Radiation Protection individual at the scene or by telephone on a case-by-case basis.
Distractor 3 is incorrect: When responding to an emergency Access Control Turnstiles may be
bypassed.

Reference: RP-QC-1002 Rev 0
Reference provided during examination: N/A

Cognitive level: Memory

Level (RO/SRO): RO
Tier: 3 Group: N/A

Question Source: New
Question History: N/A

10 CFR Part 55 Content: 41.12

Comments: None

Associated objective(s):

2.3.13 Knowledge of radiological safety procedures pertaining to licensed operator duties, such as response to radiation monitor alarms, containment entry requirements, fuel handling responsibilities, access to locked high-radiation areas, aligning filters, etc. (RO=3.4 / SRO=3.8)

SRNLF-00-K08 (Freq: LIC=I NF=I)
Given symptoms and indications depicting a generic abnormal condition and the administrative procedures, DESCRIBE the operator actions of the applicable administrative procedure.

73 **ID: QDC.ILT.15481** **Points: 1.00**

Unit 1 is at 100% power when the following alarm is received:

- 901-5 H-3, ANNUN DC POWER FAILURE

If this alarm is received due to a loss of all annunciators in the Control Room, which of the following responses is within the guidance of plant procedures?

A. Insert a manual Reactor scram.

B. Maintain Reactor power constant.

C. Commence a normal Reactor shutdown.

D. Reduce Reactor power to less than 38.5% rated thermal power.

Answer: B

Answer Explanation:

Answer: When annunciator DC power fails, procedural direction is to minimize changes in plant status.

Distractor 1 is incorrect: A manual scram does not minimize changes in plant status and will result in alarming conditions that will not alarm in the control room.
Distractor 2 is incorrect: Commencing a normal Reactor shutdown does not minimize changes in plant status and may result in alarming conditions that will not alarm in the control room.
Distractor 3 is incorrect: Lowering Reactor power below 38.5% (Pbypass) does not minimize changes in plant status and may result in alarming conditions that will not alarm in the control room.

Reference: QCAN 901(2)-5 H-3 Rev 2
Reference provided during examination: N/A

Cognitive level: Memory

Level (RO/SRO): RO
Tier: 3 Group: N/A

Question Source: Quad ILT Bank (QDC.ILT.657606)
Question History: N/A

10 CFR Part 55 Content: 41.10

Comments: Although only the 901(2)-5 panel QCAN is referenced, the same action is referenced on other applicable panel annunciator procedures.

Associated objective(s):

2.4.32 Knowledge of operator response to loss of all annunciators. (RO=3.6 / SRO=4.0)

SR-9900-K26 (Freq: LIC=Q)
Given a Station Computer Systems operating mode and various plant conditions, PREDICT how plant operations will be impacted by the following Station Computer Systems component failures:
a. Loss of the point history server
b. Loss of the process computer
c. Loss of normal and alternate AC supplies to the computer UPS
d. Loss of normal power to annunciators

74 **ID: QDC.ILT.15483** **Points: 1.00**

(A reference is provided for this question.)

Given the following:

- Unit 1 was at 100% power when a transient occurred.
- Both manual Reactor scram pushbuttons have been depressed.
- The Reactor Mode switch was placed in SHUTDOWN.
- ARI was INITIATED.
- All Scram Solenoid Group lights are LIT.
- All Individual Blue Scram lights are OUT.

You are assigned to execute QCOP 0300-28, Alternate Control Rod Insertion.

Which of the following actions is the PREFERRED method for Control Rod insertion and why?

A. Perform single Control Rod scram insertion because it is the fastest method to start reducing Reactor power.

B. Bypass the RWM and manually insert CRAM Rods because it is the fastest method to start reducing Reactor power.

C. Bypass Reactor scram signals and ARI, reset and then insert a manual scram because it is a method for inserting all control rods simultaneously.

D. De-energize scram solenoids by pulling fuses at panels 901-15 and 901-17 because it is a method for inserting all control rods simultaneously.

Answer: D

Answer Explanation:

Answer: Scram solenoid group lights being lit indicates that RPS has not processed a scram. The individual blue scram light being out indicate that the scram inlet and outlet valves are still shut (ARI and RPS have not worked). Per QCOP 0300-28, pulling fuses will de-energize the scram pilot solenoid valves and allow the control rods to scram. This is the preferred method of shutting down the Reactor because it provides simultaneous insertion of all control rods.

Distractor 1 is incorrect: Plausible if candidate assumes indications are of a hydraulic ATWS, in which single control rod insertion would be appropriate.
Distractor 2 is incorrect: Although an appropriate action during an electric ATWS, it is not the preferred method of inserting control rods because it inserts them individually.
Distractor 3 is incorrect: Plausible if candidate assumes indications are of a hydraulic ATWS, in which bypassing and resetting the RPS scram will be appropriate.

Reference: QCOP 0300-28 Rev 27
Reference provided during examination: QCOP 0300-28 Rev 27 Attachment A only

Cognitive level: High

Level (RO/SRO): RO
Tier: 3 Group: N/A

Question Source: Modified from Dresden ILT Bank NRC-12716
Question History: Dresden 2006 ILT NRC Exam

10 CFR Part 55 Content: 41.10

Comments: None.

Associated objective(s):

2.4.23 Knowledge of the bases for prioritizing emergency procedure implementation during emergency operations. (RO=3.4 / SRO=4.4)

SR-0001-K61 (Freq: LIC=B)
Given QGA 101, 'RPV Control (ATWS)', EXPLAIN the reasons for the actions.

75 **ID: QDC.ILT.15550** **Points: 1.00**

A plant emergency is in progress that requires a declaration in accordance with the Exelon Nuclear Emergency Plan (E-Plan).

- The plant emergency in progress is NOT a security threat to facility protection.

Which one of the following states the lowest classification level that REQUIRES the Technical Support Center (TSC) and Operations Support Center (OSC) to be ACTIVATED?

A. Unusual Event

B. Alert

C. Site Area Emergency

D. General Emergency

Answer: B

Answer Explanation:

Answer: The TSC and OSC must be activated at an ALERT classification or higher when NOT a security event.

Distractor 1 is incorrect: Plausible if the candidate assumes TSC is always activated at an Unusual Event (events other than a security event).
Distractor 2 is incorrect: Plausible because some actions are first initiated at the Site Area Emergency level (e.g., Assembly/Accountability).
Distractor 3 is incorrect: Plausible because some actions are first initiated at the General Emergency level (e.g., PARs are issued to the state).

Reference: G-1 / EP Overview Rev 7
Reference provided during examination: N/A

Cognitive level: Memory

Level (RO/SRO): RO
Tier: 3 Group: N/A

Question Source: Catawba ILT Bank # 581
Question History: 2008 Catawba ILT NRC Exam

10 CFR Part 55 Content: 41.10

Comments: Changed answer location (response to NRC comment).

Associated objective(s):

NGET Objective link (Refer to Non-Acredited Project for NGET/RWT objectives)

2.4.42 Knowledge of emergency response facilities. (RO=2.6 / SRO=3.8)

76 **ID: QDC.ILT.15605** **Points: 1.00**

Unit 2 was operating at 100% power when a transient occurred. The following indications were observed:

- FR 2-263-110, CORE FLOW AND DP, indicates 60.5 Mlb/hr core flow
- APRMs 1 - 6 are indicating 72%
- 2-263-107A, JET PMP LOOP FLOW, indicates 70 Mlb/hr
- 2-263-107B, JET PMP LOOP FLOW, indicates 10 Mlb/hr

NO Operator action has been taken.

As the Unit Supervisor, select the required procedure entry and the appropriate action to be directed.

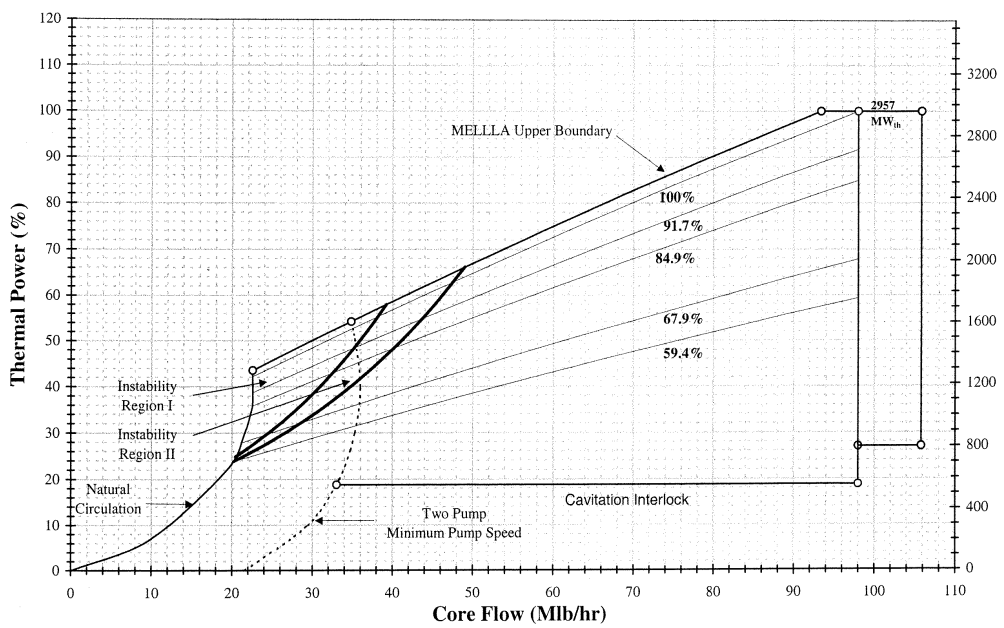

A. Enter QCOA 0202-04, "Reactor Recirc Pump Trip - Single Pump", and continuously insert ALL CRAM rods.

B. Enter QCOA 0202-04, "Reactor Recirc Pump Trip - Single Pump", and reduce speed on the 2A Reactor Recirc pump to < 78%.

C. Enter QCOA 0202-01, "Jet Pump - Shroud Access Cover Failure", for a failed shroud access cover and immediately scram the Reactor.

D. Enter QCOA 0202-01, "Jet Pump - Shroud Access Cover Failure", for a failed shroud access cover and initiate an orderly Reactor shutdown per QCGP 2-1.

Answer: B

Answer Explanation:

Answer: The indications are a loss of B reactor recirc pump, QCOA 0202-04 (Section A. Symptoms). With total core flow of 60 Mlb/hr and 72% power, the reactor is operating outside of Instability Region II. Therefore, the running recirc pump speed is required to be reduced to < 78% to prevent Jet pump Riser Brace failure. Total core flow does not equal total loop flow because B Jet pump loop flow is in the reverse direction.

Distractor 1 is incorrect: Plausible because a trip of a single Recirc pump may put the Reactor in an Instability Region (or above MELLLA) and CRAM rod use may be required. However, only enough CRAM rods should be inserted to exit the Instability Region (or stay below MELLLA). Also, Instability Region 2 will not be entered with a Recirc pump trip from rated conditions.
Distractor 2 is incorrect: Immediately scramming the Reactor is not a correct action for a failed shroud access cover.
Distractor 3 is incorrect: Plausible because the candidate may assume the difference in loop flow and core flow is due to a shroud access cover failure. However, total core flow (calculated using the jet pump loop flows) would remain constant or increase if this failure occured.

Reference: QCOA 0202-04 Rev 29, QCOP 0202-36 Rev 6
Reference provided during examination: N/A

Cognitive level: High

Level (RO/SRO): SRO
Tier: 1 Group: 1

Question Source: New
Question History: N/A

10 CFR Part 55 Content: 43(b)5

Comments: None

Associated objective(s):

295001.2.4.04 Ability to recognize abnormal indications for system operating parameters that are entry-level conditions for emergency and abnormal operating procedures. (RO=4.5 / SRO=4.7)

SR-0202-K20 (Freq: LIC=B) Given a Reactor Recirculation System operating mode and various plant conditions, EVALUATE the following Reactor Recirculation System indications/responses and DETERMINE if the indication/response is expected and normal.

a. Reactor recirc MG set
   (1) Drive motor breaker positon indications
   (2) Generator and motor winding temperatures
   (3) Generator field breaker position
   (4) Drive motor current
   (5) Scoop tube status light
b. RRCS
   (1) Master controller speed demand indicator
   (2) Individual speed controller speed / speed demand indicators
   (3) Operator Work Station (OWS)
      (a) RRCS Overview Display indications
      (b) Jet Pump Instrumentation indications
      (c) RRCS Control Algorithm Display indications
      (d) RRCS Interlocks Display indications
      (e) Jet Pump Surveillance Display indications
      (f) RRCS Measuring Points Display indications
      (g) Power to Flow Map Display indications
      (h) Trend Display indications
      (i) Alarm/Event/System List indications
c. Reactor recirc pump
   (1) Pump voltage, current and power
   (2) Differential pressure
   (3) Motor winding temperatures
   (4) Seal pressures and temperatures
   (5) Pump cooling water temperatures
   (6) Motor bearing temperatures
   (7) Pump motor oil levels
d. Reactor recirc system
   (1) MOV/AOV positions
   (2) Reactor recirc loop temperatures
   (3) Pump flow
   (4) Jet Pump Loop flow
   (5) Individual jet pump flows
   (6) Total core flow
   (7) Core plate DP and noise
e. Reactor recirc MG set oil system
   (1) AC/DC oil pump run indications
   (2) Oil pressures and temperatures
   (3) Generator and drive motor bearing oil levels and flow
   (4) Reservoir oil level
f. Reactor recirc MG set vent system
   (1) Vent fan run indications
   (2) Temperature and filter DP
   (3) Damper positions
g. Reactor recirc pump seal injection system flow and filter pressures

77 **ID: QDC.ILT.15589** **Points: 1.00**

Unit 2 was operating at 100% power when the following indications were observed on the 902-5 panel:

- APRM CH 1-6 100% and steady
- SRM CH 21, 22 PERIOD downscale

Fifteen (15) minutes later, the following indications are observed on the 902-54 and 902-7 panel:

- FR 2-5440-7, OFF GAS FLOW TO MN CHIMNEY zero (0) scfm
- PR 2-5640-79, CONDENSER A/B/C BACKPRESSURE slowly rising
- AO 2-5401A and B, SJAE SUCT VLV NORTH open

(NO operator action has been taken and NOT all indications present in the Control Room are listed above.)

Based on ALL of the above indications, which of the following procedures are required to be entered?

A. QOA 6900-11, LOSS OF TURBINE BUILDING BUS 2A-2

B. QOA 6800-01, 120/240 VAC INSTRUMENT BUS FAILURE

C. QOA 6800-03, 120/240 VAC ESSENTIAL SERVICE BUS FAILURE

D. QOA 6900-03, 24/48 VDC SYSTEM FAILURE (ONE OR BOTH BUSES)

Answer: D

Answer Explanation:

Answer: Per QOA 6900-03, a loss of the 2A bus will result in the Off-gas timer starting and subsequent Off-gas isolation. SRM Channel 21 and 22 period will also indicate downscale as a result of losing 24/48 VDC. Direct entry into QOA 6900-03 for a loss of Bus 2A.

Distractor 1 is incorrect: A loss of TB MN Bus 2A-2 will result in a coastdown of the 2A Recirc pump. Since power is steady, this is incorrect. However, it is plausible because 125 VDC supplies logic to many systems.

Distractor 2 is incorrect: A loss of the Instrument Bus will not result in the SRMs indicating downscale or an Off-gas isolation. However, it is plausible because it is 120 VAC and 120 VAC (Essential Service) supplies power to Off-gas isolation valve and SJAE valve solenoids.

Distractor 3 is incorrect: A loss of Essential Service will cause the SJAE suction valves to close. However, this is plausible because Condenser Backpressure will rise and Off-gas flow will go to zero on a loss of Essential Service.

Reference: QOA 6900-03 Rev 12
Reference provided during examination: N/A

Cognitive level: High

Level (RO/SRO): SRO
Tier: 1 Group: 1

Question Source: New
Question History: N/A

10 CFR Part 55 Content: 43(b)5

Comments: None

Associated objective(s):

SR-6900-K26 (Freq: LIC=B)
EVALUATE given key Station DC Electrical Systems parameter indications and/or responses depicting a system specific abnormality/failure and DETERMINE a course of action to correct or mitigate the following abnormal condition(s):
a. Partial/complete loss of U1 or U2 24/48 VDC
b. Partial/complete loss of U1 or U2 125 VDC
c. Partial/complete loss of U1 or U2 250 VDC
d. Loss of Non-Essential 250 VDC to a unit

295004.2.1.07 Ability to evaluate plant performance and make operational judgments based on operating characteristics, reactor behavior, and instrument interpretation. (RO=3.7 / SRO=4.7)

78 **ID: QDC.ILT.15492** **Points: 1.00**

QOA 0010-05, Plant Operation With The Control Room Inaccessible, has been entered. The Unit 1 Reactor was scrammed and RPV water level stabilized before personnel evacuated the control room. Personnel are at their assigned locations and communications established.

As the Unit Supervisor:

1.) What actions are required to establish a RPV cooldown?

2.) Where is Torus Suppression Pool temperature and pressure monitored?

A. 1.) Establish RCIC in pressure control mode per QCOP 1300-09, "RCIC Local Manual Operation"
2.) Technical Support Center (TSC)

B. 1.) Establish RCIC in pressure control mode per QCOP 1300-09, "RCIC Local Manual Operation"
2.) 2201-5 and 2201-6 Instrument Racks

C. 1.) Manually operate Relief Valves and start Torus Cooling per QCOP 1000-07, "Torus Cooling With The Control Room Inaccessible"
2.) Technical Support Center (TSC)

D. 1.) Manually operate Relief Valves and start Torus Cooling per QCOP 1000-07, "Torus Cooling With The Control Room Inaccessible"
2.) 2201-5 and 2201-6 Instrument Racks

Answer: C

Answer Explanation:

Answer: QOA 0010-05, directs an RPV cooldown established using Relief Valves as well as starting Torus Cooling. Torus temperature and pressure can be obtained in the TSC, these indications are NOT available at the 2201-5 and 2201-6 Instrument Racks. Specifically, Torus pool temperature is an input to SPDS and Torus bottom pressure is computer point C153.

Distractor 1 is incorrect: Plausible because RCIC is cited in the Control Room Abandonment procedure. However, RCIC is only used for RPV water makeup when off-site power is not available.
Distractor 2 is incorrect: Combination of distractor 1 and 3.
Distractor 3 is incorrect: Plausible because the 5 and 6 rack contains multiple indications. However, Torus pressure and temperature indication does not exist at the 5 and 6 instrument racks.

Reference: QOA 0010-05 Rev 24, LNF-1601 Rev 8, QCOP 1000-07 Rev 12, QCAP 0200-10 Rev 40
Reference provided during examination: N/A

Cognitive level: Memory

Level (RO/SRO): SRO
Tier: 1 Group: 1

Question Source: New
Question History: N/A

10 CFR Part 55 Content: 43(b)5

Comments: None

Associated objective(s):

295016.AA2.07 Suppression chamber pressure. (RO=3.2 / SRO=3.4)

S-EVAC-K06 (Freq: LIC=B)
Given QOA 0010-05, DESCRIBE the responsibilities of the different job positions required to complete the procedure (i.e., Who does what?)

79 **ID: QDC.ILT.15582** **Points: 1.00**

Unit 1 is operating at rated power with all systems in a normal lineup when the following annunciators alarmed over the next several minutes: (All alarms listed)

- 912-1 F-1, RX BUILDING CW EXP TANK HI/LO LEVEL
- 912-1 D-1, RX BUILDING COOLING WATER LOW PRESSURE
- 901-4 A-17, DRYWELL FLOOR DRAIN SUMP HIGH LEVEL

As the Unit Supervisor, which of the following actions should be directed to be COMPLETED FIRST?

A. Enter QCOA 3700-06, RBCCW Line Break Inside Containment, and manually scram the Reactor.

B. Enter QCOA 3700-01, RBCCW Low Pressure, and close MO 1-3701, U-1 RBCCW HDR ISOL.

C. Enter QCAN 912-1 D-1, Reactor Building Cooling Water Low Pressure, and place an additional RBCCW Pump in operation.

D. Enter QCOA 3700-04, RBCCW Expansion Tank High/Low Level, and manually control level in Expansion Tank with 1-3799-51, RBCCW EXPANSION TK LCV CLEAN DEMIN WTR BYP VLV.

Answer: A

Answer Explanation:

Answer: The annunciators are indicative of a RBCCW leak in the Drywell. Per QCOA 3700-06, the Reactor must be scrammed because RBCCW will be isolated to the Drywell to stop the leak.

Distractor 1 is incorrect: Plausible because closing MO 1-3701, U-1 RBCCW HDR ISOL is an appropriate action for an RBCCW leak that is outside the drywell.
Distractor 2 is incorrect: Plausible because starting a RBCCW pump will help raise RBCCW pressure, however, it does not solve the problem of a leak in the containment.
Distractor 3 is incorrect: Plausible because filling the expansion tank is an appropriate action for low level. However, it does not solve the problem of a leak in the containment.

Reference: QCOA 3700-06 Rev 5
Reference provided during examination: N/A

Cognitive level: High

Level (RO/SRO): SRO
Tier: 1 Group: 1

Question Source: New
Question History: N/A

10 CFR Part 55 Content: 43(b)5

Comments: None

Associated objective(s):

295018.2.4.11 Knowledge of abnormal condition procedures. (RO=4.0 / SRO=4.2)

SR-3900-K26 (Freq: LIC=B)
EVALUATE given key Service Water System parameter indications and/or responses depicting a system specific abnormality/failure and DETERMINE a course of action to correct or mitigate the following abnormal condition(s):

a. Loss of instrument air
b. Loss of service water pressure
c. High service water pressure
d. Service water strainer clogging/high dp preventing shifting

80 **ID: QDC.ILT.15497** **Points: 1.00**

(A reference is provided for this question.)

A LOCA has occured with all automatic isolations and actuations functioning as designed. The Unit Supervisor has entered QGA 100 and QGA 200. Actions taken in QGA 100 have stabilized RPV water level at -130 inches. NO actions have been taken in QGA 200.

Containment parameters are reported as follows:

- Drywell pressure 20 psig and rising
- Torus pressure 18 psig and rising
- Drywell temperature 270°F and rising
- Torus temperature 100°F and rising
- Torus level 14 ft. and steady
- Drywell/Torus H_2 None detected

Which of the following QGA 200 actions is required FIRST?

A. Blowdown the RPV

B. Initiate Drywell Sprays

C. Restart RBCCW and Drywell Coolers

D. Vent the Containment irrespective of off-site release rates

Answer: B

Answer Explanation:

Answer: The given parameters are within the DSIL curve, therefore, initiating Drywell sprays is allowed. Since all automatic actions occured as designed, the Reactor Recirculation pumps have tripped as well as RBCCW and the Drywell Coolers.

Distractor 1 is incorrect: The given parameters (Torus pressure and level) exceed the PSP curve. However, Drywell /Torus Sprays, if available, must be established prior to concluding parameters "cannot stay below the PSP curve" before entering QGA 500-1.
Distractor 2 is incorrect: QCOP 5750-19, Limitations and Actions step E.2 states" Do NOT attempt to restart RBCCW flow to the Drywell Coolers if a LOCA has occurred AND Drywell temperature has been > 260°F during the accident." The current conditions have Drywell temperature at 270°F.
Distractor 3 is incorrect: Presently, venting either the Drywell or Torus is NOT required to maintain parameters below PCPL.

Reference: QGA 200 Rev 9
Reference provided during examination: QGA 200 Rev 9 with entry conditions deleted and Torus level information deleted.

Cognitive level: High

Level (RO/SRO): SRO
Tier: 1 Group: 1

Question Source: New
Question History: N/A

10 CFR Part 55 Content: 43(b) SRO only objective

Comments: None

Associated objective(s):

S-0001-K24 (Freq: LIC=B)
Given QGA 200, 'Primary Containment Control' and QGA 200-5, 'Hydrogen Control', and various conditions, EVALUATE the conditions and DESCRIBE how to proceed through the flowcharts including transitions within QGA 200 or 200-5, to other QGA procedures or to normal operating procedures.

295028.EA2.04 Drywell pressure (RO=4.1 / SRO=4.2)

81 **ID: QDC.ILT.15592** **Points: 1.00**

(A reference is provided for this question.)

Which of the following radiological events requires an IMMEDIATE Emergency Action Level (EAL) classification of a SITE AREA EMERGENCY or HIGHER?

(Consider each event separately.)

Event 1: Dose assessment methodology using actual meteorology data indicates a dose of 350 mRem TEDE at the Technical Support Center (TSC).

Event 2: A radioactive release has been in progress for 19 minutes with a rate of 3.5 E+06 μCi/sec as measured by the Rx Bldg Vent and Chimney SPINGs.

Event 3: Survey results 50 feet East of the Highway 84 and Site Access Road intersection indicate a closed window gamma dose rate of 130 mRem/hr. This dose rate is expected to remain constant for 90 minutes.

A. Event 3 ONLY

B. Event 1 and 3 ONLY

C. Event 2 and 3 ONLY

D. Event 1, 2 and 3

Answer: C

Answer Explanation:

Answer: Event 2 will be classified as a Site Area Emergency (RS1) because the Emergency Director will declare the event since the release duration exceeds 15 minutes. Event 3 will be classified as a Site Area Emergency (RS1) because the location is "offsite" as the EAL Basis defines the Site Boundary as "an approximately 800 meter (1/2-mile) radius around the plant".

Distractor 1 is incorrect: Plausible if the candidate applies the EAL classifications incorrectly. For example, if the candidate moves from the right of the page to the left, the may classify Event 2 as a Alert or Unusual Event (OPEX from LOR training).
Distractor 2 is incorrect: Combination of distractor 1 and 3.
Distractor 3 is incorrect: Plausible if candidate assumes that the TSC falls within the definition of offsite since it is outside of the Reactor and Turbine Building. Also plausible if candidate is not familiar with the TSC location and assumes it is offsite. An EAL classification is not required for this event because the TSC is located on-site and is not an area listed in Table R2 and R3 of EP-AA-1006.

Reference: EP-AA-1006 Rev 27
Reference provided during examination: EP-AA-1006 page QC 3-10

Cognitive level: High

Level (RO/SRO): SRO
Tier: 1 Group: 1

Question Source: New
Question History: N/A

10 CFR Part 55 Content: 43(b) SRO only objective

Comments: None

Associated objective(s):

295038.EA2.01 Off-site (RO=3.3 / SRO=4.3)

S-EP-P01 (Freq: LIC=A) (ILT-MP) Given an event, classify the event and activate the Emergency Response organization in accordance with EP-AA-111 and EP-AA-112.

82 **ID: QDC.ILT.15500** **Points: 1.00**

(References are provided for this question.)

Unit 1 is operating at rated power when an EO reports a fire in the 250 VDC Battery Room.

- The fire is extinguished by the Fire Brigade within 10 minutes and an inspection of the area reveals deformation to several battery cells with NO battery acid leakage.
- The Unit 1 250 VDC system will be returned in OPERABLE status within 48 hours.

Given the event information above, which of the following personnel/agencies REQUIRE notification?

A. Exelon Power Team

B. Cordova Fire Department

C. Environmental Protection Agency (EPA)

D. Illinois Emergency Management Agency (IEMA)

Answer: D

Answer Explanation:

Answer: The conditions stated in the question meet the threshold for an E-Plan Alert per EAL HA6. A 15 minute notification to State and Local Agencies is required. IEMA is one of the agencies required to be notified for an Alert.

Distractor 1 is incorrect: A unit power reduction is not required since the battery can be made operable within 72 hours, therefore, the Power Team does not need to be notified.
Distractor 2 is incorrect: Notification of the Off-Site Incident Commander (Cordova Fire Dept) is not required but may be at the Fire Brigade Leader's discretion.
Distractor 3 is incorrect: This event is not a HAZMAT event, so EPA is not contacted.

Reference: EP-MW-114-100-F-01 Rev D, EP-AA-1006 Rev 27
Reference provided during examination: EP-AA-1006 pg 3-18, TS LCO 3.8.4 with Statement, Applicability and Surv. Req. deleted.

Cognitive level: High

Level (RO/SRO): SRO
Tier: 1 Group: 1

Question Source: New
Question History: N/A

10 CFR Part 55 Content: 43(b) SRO only objective

Comments: None

Associated objective(s):

S-EP-P01 (Freq: LIC=A) (ILT-MP) Given an event, classify the event and activate the Emergency Response organization in accordance with EP-AA-111 and EP-AA-112.

600000.2.4.30 Knowledge of events related to system operation/status that must be reported to internal organizations or external agencies, such as the State, the NRC, or the transmission system operator. (RO=2.7 / SRO=4.1)

83 **ID: QDC.ILT.15502** **Points: 1.00**

(A reference is provided for this question.)

Unit 2 was operating at 100% power when a malfunction in the DFWLC system resulted in a Reactor water level transient.

- Reactor power, pressure and water level stabilized and current core thermal power is 2930 MWth.
- NO operator action has been taken.

What is the HIGHEST Reactivity Management significance level that must be assigned to this event?

A. Significance Level 2

B. Significance Level 3

C. Significance Level 4

D. Significance Level 5

Answer: B

Answer Explanation:

Answer: The change in reactor power from the negative reactivity addition satisfies two criteria which make it a Significance Level 3. First, the change is > 0.5% Core Thermal Power, CTP, (.005 X 2957 MWth = 14.7 MWth). 100% power is equivalent to 2957 MWth, so the transient resulted in a drop of 27 MWth. Second, it is unanticipated and caused by an equipment problem.

Distractor 1 is incorrect: It is NOT a reactivity related UFSAR event or a failure to meet a TS Action Statement. There also is no violation of Core Thermal Power Limits or operation in an Unanalyzed Area of the Power-Flow Map
Distractor 2 is incorrect: Exceeds a Level 4 because the power change was unanticipated. The Level 4 criteria is a 0.5% CTP change in accordance with approved Operating Procedures due to an Emergent issue.
Distractor 3 is incorrect: Exceeds a Level 5 because the power change was NOT a result of a shutdown for Planned Maintenance.

Reference: OP-AA-300-1540 Rev 4
Reference provided during examination: OP-AA-300-1540 Attachment 3 Rev 4, Calculator

Cognitive level: High

Level (RO/SRO): SRO
Tier: 1 Group: 2

Question Source: Modified from Monticello ILT Bank
Question History: Monticello 2007 ILT NRC Exam

10 CFR Part 55 Content: 43(b)6

Comments: None

Associated objective(s):

295014.AA2.01 Reactor power. (RO=4.1 / SRO=4.2)

SRLF-PGRM-K4 (Freq: LIC=A NF=A)
Given various reactor conditions and evolutions in progress, IDENTIFY the activities that impact core reactivity and/or have reactivity management implications.

84 **ID: QDC.ILT.15598** **Points: 1.00**

Unit 2 is at full power when the following annunciator alarms on the 902-3 panel:

- A-14, TORUS HIGH/LOW LEVEL

Following the alarm, the NSO reports the following indications:

- LI 2-1602-3, TORUS LVL + 3"
- LI 2-1640-10A, TORUS LVL 14' – 6"

Which ONE of the following states the REQUIRED action to be COMPLETED NEXT?

A. Enter QCOS 1600-05, "Post Accident Monitoring Instrumentation Outage Report", and initiate an outage report for LI 2-1640-10A.

B. Enter QCOP 2300-09, "Bypassing HPCI And RCIC High Torus Level Automatic Suction Transfer", and defeat the HPCI and RCIC Torus high level suction valve automatic transfer.

C. Enter QCGP 2-3, "Reactor Scram", and SCRAM the Reactor.

D. Enter QCOP 1600-12, "Torus Normal Level Control, Fill And Drain Procedure Directory", and transfer water FROM the Torus.

Answer: D

Answer Explanation:

Answer: The alarm setpoint is at +1.25 inches for high Torus level. Both Torus level instruments are tracking together and the indications given support that there is a high level in the Torus. The annunciator procedure directs the operator to maintain Torus water level per QCOP 1600-12. Since the level is high, water must be rejected to the Torus

Distractor 1 is incorrect: Plausible if the candidate determines that the PAM instrument is not tracking with the other indicator and alarm.
Distractor 2 is incorrect: Plausible if the candidate assumes that the Torus suction valve transfer should be defeated to allow continue use of CCST suction to provide high quality water.
Distractor 3 is incorrect: Plausible if candidate assumes that the Reactor should be scrammed if the QGA Torus level entry requirement is met.

Reference: QCAN 901(2)-3 A-14 Rev 8
Reference provided during examination: N/A

Cognitive level: High

Level (RO/SRO): SRO
Tier: 1 Group: 2

Question Source: New
Question History: N/A

10 CFR Part 55 Content: 43(b)5

Comments: None

Associated objective(s):

295029.2.4.50 Ability to verify system alarm setpoints and operate controls identified in the alarm response manual. (CFR: 45.3) (RO=4.2 / SRO=4.0)

SR-1601-K06 (Freq: LIC=I)
Given a Containment Systems annunciator tile inscription, DESCRIBE the condition causing the alarm and any automatic actions which occur when the alarm actuates. EXPLAIN the consequences of the condition if not corrected.

85 **ID: QDC.ILT.15509** **Points: 1.00**

A severe transient has occurred on Unit 1. The Unit Supervisor is currently directing actions in QGA 200-5, Hydrogen Control, with the following plant conditions:

- -200 inches Reactor water level
- 15 psig Drywell pressure
- 13 psig Torus pressure
- CAM subsystem A sampling the Torus
- CAM subsystem B sampling the Drywell

Bus 18 trips and will be re-energized 1 hour later.

Assuming plant parameters remain stable, select the set of directions which provide accurate monitoring of Containment H_2 and O_2:

1.) While Bus 18 is de-energized.

2.) After Bus 18 is re-energized.

A. 1.) Periodically realign CAM Subsystem B between the Drywell and Torus per QCOP 2400-01, CAM Subsystem Operation.
2.) Continue using CAM Subsystem B ONLY until Subsystem A heater boxes and sample lines are at normal operating temperature.

B. 1.) Periodically realign CAM Subsystem A between the Drywell and Torus per QCOP 2400-01, CAM Subsystem Operation.
2.) Continue using CAM Subsystem A ONLY until Subsystem B heater boxes and sample lines are at normal operating temperature.

C. 1.) Periodically realign CAM Subsystem A between the Drywell and Torus per QCOP 2400-01, CAM Subsystem Operation.
2.) Verify CAM Subsystem B autostarts, realigns to the Drywell and immediately provides accurate readings.

D. 1.) Periodically realign CAM Subsystem B between the Drywell and Torus per QCOP 2400-01, CAM Subsystem Operation.
2.) Verify CAM Subsystem A autostarts, realigns to the Torus and immediately provides accurate readings.

Answer: A

Answer Explanation:

Answer: MCC 18-1A-1 supplies power to CAM Subsystem A which includes instrumentation, heat tracing and the H2 and O2 analyzers. When power is lost to the analyzers it requires 2 to 6 hours of warm up time before they are operable again. Therefore, when power is restored, a significant warm up period is required before accurate readings are obtained.

Distractor 1 is incorrect: Incorrectly concludes that CAM Subsystem B is supplied by Bus 18.
Distractor 2 is incorrect: Combination of distractors 1 and 3.

Distractor 3 is incorrect: Plausible if candidate assumes that a loss of AC power does not affect the heater box and heat trace (e.g., assumes 125 VDC is power supply).

Reference: QCOP 2400-01 Rev 18, QOM 1-6800-T13 Rev 9, LN-2400 Rev 12
Reference provided during examination: N/A

Cognitive level: High

Level (RO/SRO): SRO
Tier: 1 Group: 2

Question Source: New
Question History: N/A

10 CFR Part 55 Content: 43(b)5

Comments: None

Associated objective(s):

500000.EA2.01 Hydrogen monitoring system availability (RO=3.1 / SRO=3.5)

SR-2400-K23 (Freq: LIC=B)
Given a CAM operating mode and various plant conditions, PREDICT how CAM will be impacted by the following support system failures:
1. Loss of 480 vac
2. Loss of 125 vdc

86 **ID: QDC.ILT.15591** **Points: 1.00**

Unit 2 was operating at 100% power when a LOCA occured.

QGA 100, RPV CONTROL, is being executed with the following conditions:

- RPV water level is -80" and steady.
- RPV pressure is 825 psig and slowly lowering.
- RCIC auto-started and is injecting into the RPV at 400 gpm.
- HPCI auto-started and is injecting into the RPV at 5000 gpm.
- NO other high pressure injection sources are available.
- NO low pressure injection sources are available.

Several minutes later, the following indications are observed (NOT all alarms present in the Control Room are listed):

- 902-3, E-11, HPCI TURBINE RUPTURE DISC HIGH PRESSURE is IN alarm
- 902-3, D-11, HPCI TURBINE DISCHARGE HIGH PRESSURE is NOT in alarm
- TR 2-260-20, VLV LEAK AND CNMT AIR TEMP, indicates 110°F and steady for the HPCI Room
- ARM 2-1805-11 Indicator & Trip Unit indicates 15 mr/hr and steady for the HPCI Room

Given the above indications, which of the following states the appropriate direction to be issued to the NSO?

A. TRIP and shutdown HPCI per QCOP 2300-04, HPCI SYSTEM SHUTDOWN.

B. Continue to operate HPCI per QCOA 2300-01, HPCI AUTOMATIC INITIATION.

C. Verify that the HPCI Turbine has TRIPPED per QCOA 2300-04, HPCI TURBINE TRIP / ISOLATION RECOVERY.

D. Verify that the HPCI Turbine has ISOLATED per QCOA 2300-04, HPCI TURBINE TRIP / ISOLATION RECOVERY.

Answer: B

Answer Explanation:

Answer: The information in the stem indicates that there is a degraded inner rupture disc on the discharge of the HPCI turbine. Per QCAN 901(2) E-11, continue to operate HPCI as needed because it is required for adequate core cooling (if HPCI is secured, RCIC will not be able to maintain level with no other high pressure or low pressure injection sources available).

Distractor 1 is incorrect: Plausible if candidate does not recognize that HPCI is required for core cooling.
Distractor 2 is incorrect: Plausible if the candidate assumes that the HPCI turbine trip is tied to the rupture disc pressure (vice turbine exhaust pressure).
Distractor 3 is incorrect: Plausible if the candidate assumes that the 100# HPCI isolation is tied to the rupture disc pressure (vice RPV dome pressure).

Reference: QCAN 901(2)-3 E-11 Rev 2
Reference provided during examination: N/A

Cognitive level: High

Level (RO/SRO): SRO
Tier: 2 Group: 1

Question Source: New
Question History: N/A

10 CFR Part 55 Content: 43(b)5

Comments: None

Associated objective(s):

206000.2.4.04 Ability to recognize abnormal indications for system operating parameters which are entry-level conditions for emergency and abnormal operating procedures. (RO=4.5 / SRO=4.7)

SR-2300-K26 (Freq: LIC=B)
EVALUATE given key HPCI System parameter indications and/or responses depicting a system specific abnormality/failure and DETERMINE a course of action to correct or mitigate the following abnormal condition(s):
a. Inadvertent auto start
b. Failure to auto start
c. HPCI trip
d. HPCI isolation
e. Flow controller failure high/low
f. Turning gear failure to engage
g. Exhaust rupture diaphram failure

87 **ID: QDC.ILT.15599** **Points: 1.00**

(A reference is provided for this question.)

Unit 1 is at full power with the RCIC system in a NORMAL standby lineup per QCOP 1300-01, RCIC System Preparation For Standby Operation.

Which of the following events will require the SRO to IMMEDIATELY declare the RCIC system INOPERABLE per OP-AA-108-115, Operability Determinations?

(Consider each event separately.)

A. 1-1402-57, ECCS KEEP FILL PUMP, trips

B. MO 1-1301-60, MIN FLOW VLV, fails OPEN

C. FIC 1-1340-1, RCIC FLOW CONTROLLER, is placed MANUAL

D. Channel A (LIS 1-263-72A) of the RCIC Initiation logic fails DOWNSCALE

Answer: C

Answer Explanation:

Answer: Per QCOS 1300-01, Periodic RCIC Monthly Operability Test, Limitation and Actions step F.3 states that FIC 1-1340-1, RCIC FLOW CONTROLLER, must be in AUTO for RCIC to be operable.

Distractor 1 is incorrect: RCIC is normally aligned to the CCSTs, therefore a trip of the ECCS Keep Fill pump will not render the RCIC system inoperable.
Distractor 2 is incorrect: RCIC is not inoperable due to the failure of the minimum flow valve open because an orifice is provided in the minimum flow line to restrict flow. RCIC will still provide rate flow to the RPV with the minimum flow valve open.
Distractor 3 is incorrect: A failure of one RCIC channel downscale will not prevent RCIC initiation capability. Therefore, RCIC is not required to be declared inoperable immediately.

Reference: QCOS 1300-01 Rev 37
Reference provided during examination: TS LCO 3.3.5.2 with Statement, Applicability, 1hr Actions and Surv. Req. deleted.

Cognitive level: Memory

Level (RO/SRO): SRO
Tier: 2 Group: 1

Question Source: New
Question History: N/A

10 CFR Part 55 Content: 43(b) SRO only objective

Comments: None

Associated objective(s):

217000.2.1.32 Ability to explain and apply system limits and precautions. (RO=3.8 / SRO=4.0)

S-OPDT-K06 (Freq: LIC=A) Given a degraded or nonconforming condition that may impact the operability of a specific SSC described in Tech Specs, using P&ID/C&IDs, E-prints and Tech Specs, if necessary, PERFORM an immediate Operability Determination and DETERMINE if the SSC meets Tech Spec operability requirements in accordance with the Operability Determination procedures, OP-AA-108-115 and OP-AA-108-115-1002.

88 **ID: QDC.ILT.15520** **Points: 1.00**

(References are provided for this question.)

Unit 1 is starting up from a weekend outage and is presently in Mode 2 with the Containment inerted. The crew is preparing to roll the Main Turbine when the Work Control Center informs the Unit Supervisor of the following Clearance Order error:

The 1-4799-280, DW PNEU TO AO 1-0203-3A SHUTOFF VLV (Target Rock), was left in the CLOSED position.

What actions, if any, are required per Technical Specifications?

A. None

B. TS LCO 3.4.3 Condition A ONLY.

C. TS LCO 3.5.1 Condition G and TS LCO 3.4.3 Condition A ONLY.

D. TS LCO 3.5.1 Condition G, TS LCO 3.4.3 Condition A and TS LCO 3.6.1.6 Condition A.

Answer: C

Answer Explanation:

Answer: The ADS/Relief Valve function ONLY requires a nitrogen or air supply to function. The mispositioned valve,1-4799-280, would isolate both N2 and air, thereby making the relief function as well as ADS function inoperable. The "A" Target Rock Relief Valve is also a Safety valve which actuates at 1135 psig steam pressure via a bellows/pilot valve arrangement that does not require motive air. TS 3.5.1 Condition G pertains to an inoperable ADS valve and TS 3.4.3 Condition A applies to one inoperable Relief valve.

Distractor 1 is incorrect: Incorrectly assumes an available backup of air or reserve N2. The DW pneumatic system has both. The backup N2 supply will automatically cut in if the normal supply is lost. However the backup Instrument Air supply must be valved in. In either case, the mispositioned valve is upstream of the redundant supplies rendering them ineffective.
Distractor 2 is incorrect: Assumes ONLY the Relief function of the valve is made inoperable. Does not realize the ADS actuates through the same mechanism.
Distractor 3 is incorrect: Candidate assumes that the Target Rock relief valve is one of the Low Set Relief Valves.

Reference: M-24 Sheet 13 Rev H, LIC-0203 Rev 15, LCO 3.4.3 Amendment 235/230, LCO 3.5.1 Amendment 223/218, LCO 3.6.1.6 Amendment 199/195
Reference provided during examination: M-24 Sheet 13 Rev H with the 280 valve circled, LCO 3.4.3, LCO 3.5.1 and LCO 3.6.1.6 without LCO statement, 1 hr or less actions and applicability.

Cognitive level: High

Level (RO/SRO): SRO
Tier: 2 Group: 1

Question Source: New
Question History: N/A

10 CFR Part 55 Content: 43(b)2

Comments: None

Associated objective(s):

SR-0203-K32 (Freq: LIC=B)
Given ADS logic and/or electromatic relief valve/ PORV/ Target Rock safety-relief valve operability status OR key parameter indications, various plant conditions and a copy of Tech Specs, DETERMINE Tech Spec compliance and required actions, if any.

218000.A2.03 Loss of air supply to ADS valves: Plant-Specific (RO=3.4 / SRO=3.6)

89 **ID: QDC.ILT.15601** **Points: 1.00**

Unit 1 is at full power with all systems in their normal lineup.

Which of the following equipment failures (and corresponding QCOA procedure execution) will require the Unit Supervisor to direct the MANUAL transfer of auxiliary power TO or FROM the Reserve Aux Transformer (T-12)?

A. Trip of all T-12 fans with transformer oil temperature of 115°C.
AND
Subsequent execution of QCOA 6100-14, Reserve Auxiliary Transformer Loss Of Cooling.

B. Trip of the running Bus Duct Blower with Bus Conductor temperature of 92°C.
AND
Subsequent execution of QCOA 5370-02, Isolated Phase Bus Loss of Bus Duct Cooling.

C. Trip of the 1A Stator Cooling Water (SCW) Pump with SCW temperature of 72°C.
AND
Subsequent execution of QCOA 5300-01, Loss of Stator Cooling.

D. Trip of the Main Hydrogen Seal Oil Pump with seal oil pressure 7 psid above Generator hydrogen pressure.
AND
Subsequent execution of QCOA 5350-01, Loss of Hydrogen Seal Oil Pump.

Answer: A

Answer Explanation:

Answer: The selection of QCOA 6100-14, Reserve Auxiliary Transformer Loss Of Cooling, is required. A trip of all cooling fans with a corresponding oil temperature > 100°C will require immediate removal of the RAT from operation per QOP 6100-01, Removing Reserve Auxiliary Transformer 12 From Service With Unit 1 Operating.

Distractor 1 is incorrect: The selection of QCOA 5370-02, Isolated Phase Bus Loss of Bus Duct Cooling, is required. However, a loss of Bus Duct Cooling will not require transferring T-11 load to T-12. Another Bus Duct Blower can be started or load can be lowered to maintain temperature.
Distractor 2 is incorrect: The selection of QCOA 5300-01, Loss of Stator Cooling, is required. Transferring aux power to T-12 is plausible if the candidate does not recognize that QCOA action is to verify that the standby pump auto-starts.
Distractor 3 is incorrect: The selection of QCOA 5350-01, Loss of Hydrogen Seal Oil Pump, is required. Transferring aux power to T-12 is plausible if the candidate does not recognize that the Generator can operate on the Emergency Hydrogen Seal Oil Pump.

Reference: QCOA 6100-14 Rev 12, QOP 6100-01 Rev 20
Reference provided during examination: N/A

Cognitive level: High

Level (RO/SRO): SRO

Tier: 2 Group: 1

Question Source: New
Question History: N/A

10 CFR Part 55 Content: 43(b)5

Comments: Inserted procedure selection within the answer/distractor (response to NRC comment).

Associated objective(s):

SRN-6100-K26 (Freq: LIC=B NF=B)
EVALUATE given key 345 KV Switchyard/ Main Transformer System parameter indications and/or responses depicting a system specific abnormality/failure and DETERMINE a course of action to correct or mitigate the following abnormal condition(s):
a. Unit main transformer trouble alarm
b. Loss of 125 vdc
c. Loss of 480 vac
d. Loss of 120 vac
e. Loss of T12/T22 (main transformer backfeed operation)

262001.A2.04 Types of loads that, if deenergized, would degrade or hinder plant operation (RO=3.8 / SRO=4.2)

90 **ID: QDC.ILT.15533** **Points: 1.00**

Unit 1 is at power when the 1/2B Instrument Air Compressor trips and following annunciators alarm:

- 912-1 D-11, UNIT 1/2B INST AIR LOW PRESS
- 912-1 A-11, UNIT 1A INST AIR LOW PRESS
- 912-1 A-12, 1A SERV AIR BACKUP VLV OPEN
- 912-1 A-8, UNIT 1A DRYER BYPASS VLV OPEN

The NSO started all available Instrument Air and Service Air Compressors. Ten seconds later,

- Annunciator 901-5 A-1, SCRAM VALVE AIR SUPPLY LOW PRESSURE, alarms
- Control rod K-6 is drifting in

As the Unit Supervisor, which of the following actions do you direct to be COMPLETED FIRST?

A. Scram the reactor and enter QCGP 2-3, Reactor Scram.

B. Locate and isolate the leak per QOA 4700-06, Loss of Instrument Air.

C. Open the 1-4799-221, SERV AIR TO INST AIR PCV BYP VLV, per QOA 4700-02, Instrument Air Compressor Trip.

D. Open the 1A Instrument Air Dryer Bypass 1-4799-549A per QOA 4700-03, Instrument Air Dryer Bypass Valve Open.

Answer: A

Answer Explanation:

Answer: Per QOA 4700-06, the Reactor should be scrammed when Instrument air pressure is $\leq$ 75 psig OR the 901-5 A-1, SCRAM VALVE AIR SUPPLY LOW PRESSURE alarm. The 1/2B and 1A Instrument Air Receiver alarms are set at 85 psig. When the 901-5 A-1 annunciator alarmed in 10 seconds, the scram air header was at 75 psig and with one control rod is drifting in, it was still lowering. Therefore, a second control rod drift is imminent.

Distractor 1, 2 and 3 is incorrect: Plausible because they increase the air supply to the Instrument Air Header. However, they require some amount of time and indications support scramming the Reactor.

Reference: QOA 4700-06 Rev 19, QCOA 0300-11 Rev 20, QCAN 901(2)-5 A-1 Rev 7
Reference provided during examination: N/A

Cognitive level: High

Level (RO/SRO): SRO
Tier: 2 Group: 1

Question Source: New
Question History: N/A

10 CFR Part 55 Content: 43(b)5

Comments: None

Associated objective(s):

SRN-4701-K26 (Freq: LIC=B NF=B) EVALUATE given key Instrument Air System parameter indications and/or responses depicting a system specific abnormality/failure and DETERMINE a course of action to correct or mitigate the following abnormal condition(s):

a. Compressor trip
b. Compressor unloading valve failure (open/closed)
c. Dryer switching failure
d. Loss of instrument air pressure (air leak) (including use of vendor supplied air compressors and dryers)
g. Dryer desiccant breakdown/oil coated

300000.2.4.45 Ability to prioritize and interpret the significance of each annunciator or alarm. (RO=4.1 / SRO=4.3)

91 **ID: QDC.ILT.15535** **Points: 1.00**

Given:
- Unit 2 startup in progress
- Reactor Thermal Power is 46%
- Total Core Flow is 42 Mlb/hr
- All OPRMs are INOPERABLE

The crew was preparing to increase core flow to 50 Mlb/hr per the startup REMA when the following occurred:
- Annunciator 902-4 D-1, A RECIRC MG SET FIELD BRKR OPEN, alarms
- An EO calls the control room and reports, "the trip pushbutton for the 2A Reactor Recirculation MG Set breaker at Bus 21 was inadvertently actuated while equipment was being moved in the area. The breaker is NOT damaged."

The NSO reports Reactor power at 40% and total core flow at 33 Mlb/hr.

As Unit Supervisor, the required actions to be directed are ...

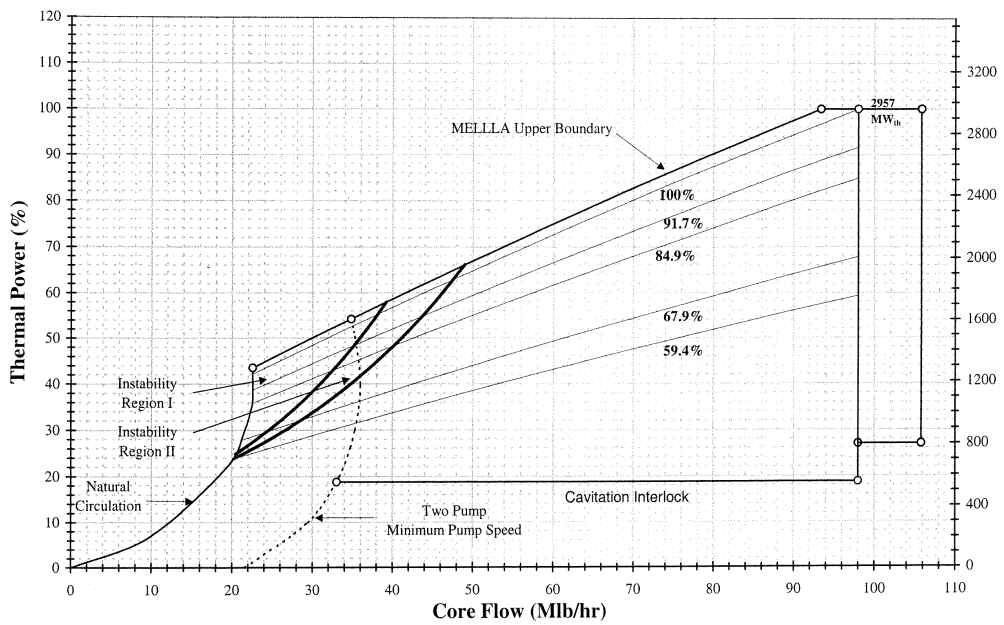

A. Enter QCOA 0400-02, Core Instabilities, and insert a manual reactor scram.

B. Enter QCOP 0202-02, Unit 2 Reactor Recirculation System Startup, and restart the 2A Reactor Recirculation pump.

C. Enter QCOA 0202-04, Reactor Recirc Pump Trip-Single Pump, insert CRAM rods (followed by in sequence rods if necessary) until Reactor operation is outside Instability Region II.

D. Enter QCOA 0400-02, Core Instabilities, and increase speed on the 2B Reactor Recirculation Pump until Reactor operation is outside of Instability Region II.

Answer: C

Answer Explanation:

Answer: Prior to the 2A Recirc Pump trip, the Flow Control Line was > 59.4%. After the 2A Recirc pump trip, reactor power and core flow are well within Instability Region II. Per QCOA 0202-04, the required action is to insert Cram rods until operation is outside of Instability Region II.

Distractor 1 is incorrect: Would be correct if there were indications of core instabilities.
Distractor 2 is incorrect: If an improper determination of the reactor operating region outside Instability Region II is made, then the correct answer would be to restart the 2A Recirc pump before Recirc Loop or RPV Coolant to Bottom Head Coolant temperature differences become out of tolerance.
Distractor 3 is incorrect: Would be correct if OPRMs were operable.

Reference: QCOA 0400-02 Rev 19, QCOA 0202-04 Rev 29
Reference provided during examination: N/A

Cognitive level: High

Level (RO/SRO): SRO
Tier: 2 Group: 2

Question Source: New
Question History: N/A

10 CFR Part 55 Content: 43(b)5

Comments: None

Associated objective(s):

SR-0202-P04 (Freq: LIC=A)
Given an operating reactor plant with a loss of one reactor recirculation pump, take actions to determine the cause, stabilize plant parameters and to exit the instability region in accordance with QCOA 0202-04.

202001.A2.06 Inadvertent recirculation flow decrease (RO=3.6 / SRO=3.8)

92 **ID: QDC.ILT.15593** **Points: 1.00**

Unit 1 is operating at 50% power when BOTH Diesel Fire Pumps are found to be INOPERABLE and UNAVAILABLE.

Which of the following actions is required to be directed to maintain Fire System pressure and flow in the event of a deluge initiation?

(Consider each action separately.)

A. Enter QCOP 4100-08, Sectionalizing The Fire Protection Ring Header, and sectionalize the fire protection ring header as directed.

B. Enter QCOA 3900-01, Service Water System Failure, and place the Unit 1 Service Water Header Isolation Switch to CLOSE.

C. Enter QCOP 4100-01, Firewater System Lineup For Standby Operation, and fully open the 1-4199-186 SERV WTR TO FIRE WTR SV UPSTREAM BYP VLV.

D. Enter QCOA 4100-02, Fire Protection System Failure, open the MO 1/2-3906, FIRE PROT SW SPLY VLV and start additional Service Water pumps as required.

Answer: D

Answer Explanation:

Answer: The MO 1/2-3906 valve opening will cross connect Service Water to the Fire Main via a 10 inch line. If Service Water pressure lowers to 75 psig on a subsequent deluge, the 1B Service Water pump will autostart. The procedure also directs the starting of additional Service Water pumps as needed.

Distractor 1 is incorrect: QCOP 4100-08 is not applicable to this situation. This procedure was designed in response to security concerns (B.5.b) and holds as a prerequisite that the Fire Protection Water system has been rendered unusable or ineffective in its current configuration due to damage or actuation well beyond its design capability.
Distractor 2 is incorrect: Placing the Unit 1 Service Water Header Isolation Switch to CLOSE will isolate several large Service Water loads which will assist in maintaining header pressure. However, the system cross-connect is through a 1/2 inch line and will not meet the requirement of a possible deluge initiation.
Distractor 3 is incorrect: The 1-4199-186 valve is on the 1/2 inch line from Service Water to the Fire System. It is throttled open in the standby line-up. Fully opening the valve would not add significantly to the pressure and flow requirements of the Fire header..

Reference: QCOA 4100-02 Rev 8
Reference provided during examination: N/A

Cognitive level: High

Level (RO/SRO): SRO
Tier: 2 Group: 2

Question Source: Modified from Quad ILT Bank (QDC.LWQ.00028)

Question History: N/A

10 CFR Part 55 Content: 43(b)5

Comments: None

Associated objective(s):

286000.A2.05 Fire protection diesel trips (RO=3.1 / SRO=3.3)

SRN-4100-K26 (Freq: LIC=B NF=B)
EVALUATE given key Fire Protection Systems parameter indications and/or responses depicting a system specific abnormality/failure and DETERMINE a course of action to correct or mitigate the following abnormal condition(s):

a. Loss of diesel fire pump
b. Automatic fire valve opens
c. Loss of EDG fuel oil transfer pump
d. CO2 fire protection system initiation from false signal (will not reset)

93 **ID: QDC.ILT.15543** **Points: 1.00**

Unit 1 was operating at rated power when a LOCA (5.0 psig Drywell pressure) occurred with a loss of offsite power. All ECCS systems responded as designed. After stabilizing the plant, the NSO acknowledges and reports the following annunciators:

- 912-5 E-2, CONTROL ROOM VENT/EXH FAN TRIP
- 912-5 F-3, SERVICE BLDG HVAC EQUIP TRIP

As the Unit Supervisor,

1.) What direction is required concerning the Control Room HVAC system?
AND
2.) What is the impact on the Control Room Ventilation system of the action taken?

A. 1.) Enter QCOP 5750-09, Control Room Ventilation System, restart the A AHU, and start the 1/2A or 1/2B AFU.
2.) The Control Room is pressurized with filtered outside air.

B. 1.) Enter QCOP 5750-09, Control Room Ventilation System, verify the B AHU autostarts and start the 1/2A or 1/2B AFU.
2.) The Control Room is pressurized with filtered outside air.

C. 1.) Enter QOA 5750-15, Complete Loss of Control Room HVAC and establish temporary ventilation in the Control Room ONLY.
2.) The Control Room is supplied with unfiltered outside air and pressurization CANNOT be maintained.

D. 1.) Enter QOA 5750-15, Complete Loss of Control Room HVAC and establish temporary ventilation in the Control Room and Aux Electric Room.
2.) The Control Room is supplied with unfiltered outside air and pressurization CANNOT be maintained.

Answer: B

Answer Explanation:

Answer: QCGP 2-3, Reactor Scram, requires that the Air Filtration Unit (AFU) is started within 40 minutes of a LOCA condition. With a loss of offsite power, the A AHU and associated equipment trip on loss of power as indicated by annunciators 912-5 E-2, CONTROL ROOM VENT/EXH FAN TRIP, and 912-5 F-3, SERVICE BLDG HVAC EQUIP TRIP. The B AHU autostarts on low flow when the EDGs supply the ECCS Busses. With the B AHU running, the A AHU is not only locked out, it still does not have power with Bus 16 being de-energized from the LOOP. The purpose of the AFU is to supply filtered air, limiting personnel exposure under accident conditions. The purpose of the AHUs is to control temperature and humidity to ensure habitability and equipment reliability.

Distractor 1 is incorrect: The A AFU does not have a power supply lined up. Either Bus 16 must be re-energized or MCC 16/26-6 must be supplied from Bus 26.
Distractor 2 and 3 are incorrect: Since the B AHU is available, it is incorrect to enter QOA 5750-15.

Reference: QCGP 2-3 Rev 67, QOA 5750-09 Rev 10, UFSAR Section 6.4.4.1 Rev 9

Reference provided during examination: N/A

Cognitive level: High

Level (RO/SRO): SRO
Tier: 2 Group: 2

Question Source: New
Question History: N/A

10 CFR Part 55 Content: 43(b)5

Comments: None

Associated objective(s):

290003.2.2.44 Ability to interpret control room indications to verify the status and operation of system, and understand how operator actions and directives affect plant and system conditions. (RO=4.2 / SRO=4.4)

SR-5752-K26 (Freq: LIC=B)
EVALUATE given key Control Room Ventilation System parameter indications and/or responses depicting a system specific abnormality/ failure and DETERMINE a course of action to correct or mitigate the following abnormal condition(s):
a. Complete loss of control room ventilation
b. Toxic gas/release from nearby chemical plant

94 **ID: QDC.ILT.15548** **Points: 1.00**

(A reference is provided for this question.)

A Unit 2 startup is in progress with the following conditions at 0900:

- IRM range 8
- Heatup rate is approx. 80°F/hr
- Vessel Beltline temperature is 150°F
- Reactor Vessel Pressure is 300 psig

Which of the following identifies the initial action, if any, required per Technical Specifications and the reason for that action?

A. Restore parameters to within limits by 0930 because the P/T limits provide a margin to brittle fracture failure of the Reactor vessel.

B. Restore parameters to within limits by 1000 because the P/T limits are derived from Design Bases Accident (DBA) analyses.

C. Be in Mode 3 by 2100 because the P/T limits provide a margin to brittle fracture failure of the Reactor vessel.

D. No action is required because ALL parameters listed are within the P/T limits.

Answer: A

Answer Explanation:

Answer: Reactor is operating in Mode 2, with a critical heatup in progress. TS 3.4.9, RCS Pressure and Temperature (P/T) Limits, Figure 3.4.9-3, Critical Operations Curve, apply. The given parameters of Beltline temperature and RPV pressure are to the left of the curve and therefore outside the "Acceptable Region". This is a system generic question because operation with regard to the BFPL curve applies to all vessels (ASME code). This requires entry into TS 3.4.9 Condition A.

Distractor 1 is incorrect: Plausible if candidate assumes that the time requirement for restoration is 1 hour.
Distractor 2 is incorrect: Plausible if candidate assumes that Tech Specs requires an immediate shutdown and cooldown when P/T limits are violated.
Distractor 3 is incorrect: Uses the wrong curve. ie., Figure 3.4.9-2, Non-Nuclear Heatup/Cooldown Curve.

Reference: TS LCO 3.4.9 Rev 228/223
Reference provided during examination: TS LCO 3.4.9 (except SR listed) Rev 228/223 with the Statement, Applicability and 1 hour or less actions deleted.

Cognitive level: High

Level (RO/SRO): SRO
Tier: 3 Group: N/A

Question Source: Modified from Quad ILT Bank (QDC.ILT.605379)
Question History: N/A

10 CFR Part 55 Content:43(b)(2)

Comments: None

Associated objective(s):

SR-0201-K32 (Freq: LIC=B)
Given Reactor Vessel and Internals operability status OR key parameter indications, various plant conditions and a copy of Tech Specs, DETERMINE Tech Spec compliance and required actions, if any.

2.1.25 Ability to interpret reference materials such as graphs, curves, tables, etc. (RO=3.9 / SRO=4.2)

95 **ID: QDC.ILT.15594** **Points: 1.00**

Unit 2 is at 100% power when Chemistry determines that reactor coolant specific activity is 0.6 μCi/gm Dose Equivalent Iodine (I-131).

Complete the following statements:

- This is __(1)__ the Technical Specification limit for reactor coolant specific activity.
- Per the bases of TS 3.4.6, RCS Specific Activity, the reactor coolant specific activity limit __(2)__.

A. (1) below
(2) ensures the source term assumed in the safety analysis for the Main Steam Line Break (MSLB) is not exceeded.

B. (1) above
(2) prevents stress corrosion cracking of the stainless steel reactor materials that are in contact with the coolant.

C. (1) below
(2) prevents stress corrosion cracking of the stainless steel reactor materials that are in contact with the coolant.

D. (1) above
(2) ensures the source term assumed in the safety analysis for the Main Steam Line Break (MSLB) is not exceeded.

Answer: D

Answer Explanation:

Answer: The specific iodine activity is limited to ≤ 0.2 μCi/gm Dose Equivalent Iodine (I-131). This limit ensures the source term assumed in the safety analysis for the MSLB is not exceeded, so the dose consequence of any release of radioactivity to the environment during a MSLB is less than a small fraction of the 10 CFR 50.67 limits at the site boundary and less than 10 CFR 50.67 limits for the control room.

Distractor 1 is incorrect: Plausible if the candidate assumes that the DEI limit is 1.0 μCi/gm. In Mode 1, the TLCO 3.4.b limit for RCS conductivity is 1.0 μmhos/cm at 25°C.
Distractor 2 is incorrect: Plausible because chloride limits listed in TLCO 3.4.b, RCS Chemistry, are to prevent stress corrosion cracking of the stainless steel materials that are in contact with the coolant.
Distractor 3 is incorrect: Combination of distractor 1 and 2.

Reference: TS LCO 3.4.6 and bases
Reference provided during examination: N/A

Cognitive level: Memory

Level (RO/SRO): SRO
Tier: 3 Group: N/A

Question Source: Crystal River ILT Exam Bank

Question History: Crystal River 2007 ILT NRC Exam

10 CFR Part 55 Content: 43(b)2

Comments: None

Associated objective(s):

2.1.34 Knowledge of primary and secondary plant chemistry limits. (RO=2.7 / SRO=3.5)

S-1200-K33 (Freq: LIC=I)
DISCUSS the bases for Reactor Water Cleanup System related Tech Spec LCO's.

96 **ID: QDC.ILT.15552** **Points: 1.00**

The Radwaste EO calls into the Control Room and reports the A/C system in the Radwaste Control Room is NOT functioning. A portable cooling unit will need to be installed to maintain equipment reliability.

As the Unit Supervisor, what procedure, if any, is required to support the installation?

A. OP-AA-108-101, Control of Equipment and System Status.

B. OP-AA-109-101, Clearance and Tagging.

C. CC-AA-112, Temporary Configuration Changes.

D. No procedural support is required.

Answer: C

Answer Explanation:

Answer: The installation of temporary cooling is NOT a permanent change to the plant and is in the category of temporary changes. Additionally, CC-AA-112, Temporary Configuration Changes, section 4.1.3, specifically states the temporary cooling is NOT an Exclusion from this procedure.

Distractor 1 is incorrect: The purpose of OP-AA-108-101, Control of Equipment and System Status, is to implement controls involving equipment manipulations, ie. off-normal alignment of systems, valves, etc.

Distractor 2 is incorrect: OP-AA-109-101, Clearance and Tagging, is the process used to protect personnel while performing work on systems. It is designed for protection, prevention of inadvertent operation, and administrative control when necessary.

Distractor 3 is incorrect: Incorrectly concludes that placing temporary cooling is NOT a design change of any type.

Reference: CC-AA-112 Rev 14
Reference provided during examination: None

Cognitive level: Memory

Level (RO/SRO): SRO
Tier: 3 Group: 1

Question Source: Quad ILT Bank (QDC.ILT.12107)
Question History: N/A

10 CFR Part 55 Content: 43(b)3

Comments: Changed "temporary" to "portable" (response to NRC comment).

Associated objective(s):

2.2.14 Knowledge of the process for controlling equipment configuration or status. (RO=3.9 / SRO=4.3)

SR-PGTM-K3 (Freq: LIC=I)
Given a set of conditions regarding changes to the plant configuration, DETERMINE if they fall under the requirements of CC-AA-112, Temporary Configuration Changes.

97 **ID: QDC.ILT.15556** **Points: 1.00**

Which of the following is a violation of the Conditions and Limitations in the Facility License?

A. Operation in Mode 1 with a Reactor Coolant System unidentified leakage rate of 3 gpm.

B. Control Room staff of ONE Senior Reactor Operator and TWO Reactor Operators with Unit 1 in Mode 4 and Unit 2 in Mode 5.

C. Steady state thermal power below the license thermal power limit, with momentary indications above the limit as a result of normal process fluctuations.

D. A change is made, without NRC approval, to an Appendix R procedure that results in 80 hours to achieve cold shutdown.

Answer: D

Answer Explanation:

Answer: The 10 CFR 50 Appendix R requirement is to achieve cold shutdown in 72 hours. The Facility license allows changes to the fire protection program without NRC approval if those "changes WOULD NOT adversely affect the ability to achieve and maintain safe shutdown in the event of a fire."

Distractor 1 is incorrect: The Technical Specification limit for unidentified RCS leakage is $\leq$ 5 gpm. (Reference TS LCO 3.4.4 (b)). Operation is within the TS LCO and NOT a violation of the Facility Operating License.

Distractor 2 is incorrect: Lineup is within guidelines of Tech Spec 5.2.2 and 10 CFR 50.54(m)(2)(i).

Distractor 3 is incorrect: Power fluctuations as a result of normal oscillations due to stabilizing after control rod movement or flow adjustments are NOT considered "intentional operation above the Facility License limit of 2957 MWth".

Reference: 10 CFR50 Appendix R, DPR 29
Reference provided during examination: N/A

Cognitive level: Memory

Level (RO/SRO): SRO
Tier: 3 Group: N/A

Question Source: New
Question History: N/A

10 CFR Part 55 Content: 55.43(b) SRO only objective

Comments: None

Associated objective(s):

2.2.38 Knowledge of conditions and limitations in the facility license. (RO=3.6 / SRO=4.5)

98 **ID: QDC.ILT.15557** **Points: 1.00**

Acting as the Station Emergency Director, you have been requested to authorize Emergency Exposure Limits to allow entry into an area to save the lives of an EO and RP Technician.

A volunteer, who is FULLY AWARE of the risks involved, has agreed to attempt the rescue. The volunteer is an adult male, Exelon employee (Occupational Worker) who does NOT have high lifetime exposure, AND has NOT had any Planned Special Exposures OR administrative increases in his exposure limits.

Complete the following two statements regarding the volunteer's Total Effective Dose (TEDE) limits.

PRIOR TO this event, company policy administratively limits him to an ANNUAL limit of __(1)__ REM.
DURING this event, the MAXIMUM exposure you can authorize is __(2)__.

A. (1) 2
(2) 25 REM

B. (1) 5
(2) 25 REM

C. (1) 2
(2) GREATER than 25 REM

D. (1) 5
(2) GREATER than 25 REM

Answer: C

Answer Explanation:

Answer: The Exelon administrative limit is 2000 mrem routine cumulative TEDE/yr for adults. For a lifesaving activity with the worker fully aware of the risks involved, the limit for dose exposure is > 25 REM.

Distractor 1 is incorrect: 25 REM is the lifesaving limit for individuals NOT fully aware of the risks involved with the radiation exposure.
Distractor 2 is incorrect: Combination of distractor 1 and 3.
Distractor 3 is incorrect: 5 REM is the NRC annual limit.

Reference: RP-AA-203 Rev 3
Reference provided during examination: N/A

Cognitive level: Memory

Level (RO/SRO): SRO
Tier: 3 Group: N/A

Question Source: Quad ILT Bank (QDC.06-01 CERT SRO98)
Question History: N/A

10 CFR Part 55 Content: 43(b)4

Comments: None

Associated objective(s):

SRNLF-00-K08 (Freq: LIC=I NF=I)
Given symptoms and indications depicting a generic abnormal condition and the administrative procedures, DESCRIBE the operator actions of the applicable administrative procedure.

2.3.04 Knowledge of radiation exposure limits under normal or emergency conditions. (RO=3.2 / SRO=3.7)

99 **ID: QDC.ILT.15560** **Points: 1.00**

Complete the statements below regarding the Drywell Radiation Monitoring system and the basis for EAL Table F2-Drywell Radiation Thresholds.

The Drywell radiation monitors are designed to detect ___(1)___ radiation.

Radiation levels exceeding the Table F2 thresholds ____(2)___.

A. (1) gamma
(2) do NOT apply in an ATWS condition.

B. (1) gamma
(2) indicate significant fuel damage

C. (1) neutron
(2) are corrected for containment flooding conditions.

D. (1) neutron
(2) are based upon the same fuel isotope mixture for the first 23 hours.

Answer: B

Answer Explanation:

Answer: The EAL Basis for a 'Potential Loss Of Containment", Category 5 Hi Containment Drywell Radiation states, "The drywell radiation monitor reading is a value that indicates significant fuel damage well in excess of that required for loss of the Fuel Cladding barrier." NUREG-1228 "Source Estimations During Incident Response to Severe Nuclear Power Plant Accidents" states that such readings do not exist when the amount of cladding damage is less than 20%." Drywell Radiation monitors are designed to measure gamma radiation.

Distractor 1 is incorrect: Per the basis, the Table F2 value for "< 2 hours after shutdown" is used during at power (including ATWS) conditions.

Distractor 2 is incorrect: DW radiation monitors are NOT neutron detectors. Per the basis, the Table F2 values derived using the Core Damage Assessment Methodology (CDAM), assumed 20% clad damage, NO drywell sprays, and a LOCA depressurized system. In other words, no water shielding between the Drywell Radiation Monitor and the Recirculation piping.

Distractor 3 is incorrect: DW radiation monitors are NOT neutron detectors. Table F2 values decrease as time after shutdown increases due to isotopic decay.

Reference: EAL Basis EP-AA-1006, Rev.27 and UFSAR 6.2-48 Rev 6
Reference provided during examination: N/A

Cognitive level: Memory

Level (RO/SRO): SRO
Tier: 3 Group: N/A

Question Source: New

Question History: N/A

10 CFR Part 55 Content: 43(a)

Comments: None

Associated objective(s):

2.3.15 Knowledge of radiation monitoring systems, such as fixed radiation monitors and alarms, portable survey instruments, personnel monitoring equipment, etc. (RO=2.9 /SRO=3.1)

100 **ID: QDC.ILT.15565** **Points: 1.00**

(References are provided for this question.)

A LOCA with a loss of offsite power (LOOP) has occurred on Unit 2. Current plant parameters are:

- RPV pressure 50 psig
- RPV water level -250 inches and lowering
- Drywell pressure 21 psig
- Torus pressure 19 psig
- Drywell H_2 concentration 3%
- Drywell O_2 concentration 1%
- Torus H_2 concentration 2%
- Torus O_2 concentration 1%
- All available systems are injecting into the RPV.

Which of the actions listed below has the GREATEST priority?

A. Exit all QGAs AND enter all SAMGs provided the TSC is prepared to provide SAMG decision-making.

B. Enter QGA 200-5, Hydrogen Control, and vent and purge the Drywell if the offsite release rate is expected to stay below the LCO limit.

C. Enter QCOP 1000-30, Post-Accident RHR Operation, and initiate Drywell Sprays.

D. Enter QCOP 1600-13, Post Accident Venting of the Primary Containment, and vent the Torus even if release rate limits are exceeded.

Answer: A

Answer Explanation:

Answer: The SAMGs are entered when "adequate core cooling" cannot be established. QGA 100 and QGA 101 specifically direct entry into the SAMGs and exit from ALL QGAs when core cooling is lost and the TSC is prepared to provide SAMG decision-making. Any direction of QCOPs or QCOAs from the QGAs are also be overridden by SAMG direction.

Distractor 1 is incorrect: QGA directed action from QGA 200 on detection of Hydrogen in the containment. Is not a priority over SAMG actions.

Distractor 2 is incorrect: Per QGA 200 , flow cannot be diverted from the core if adequate core cooling is not established.

Distractor 3 is incorrect: PCPL has not been violated, so the Torus cannot be vented irrespective of the release rate.

Reference: QGA 100 Rev. 9
Reference provided during examination: QGA 100, 200 and 200-5 (delete Detail C, entry conditions and Torus level information)

Cognitive level: High

Level (RO/SRO): SRO
Tier: 3 Group: N/A

Question Source: Quad ILT Bank (QDC.EDI.102799)
Question History: N/A

10 CFR Part 55 Content: 43(a)

Comments: Removed the "TSC is prepared to make SAMG decision-making" from the stem and added it to the answer statement (response to NRC comment).

Associated objective(s):

2.4.16 Knowledge of EOP implementation hierarchy and coordination with other support procedures or guidelines such as, operating procedures, abnormal operating procedures, and severe accident management guidelines. (RO=3.5 / SRO=4.4)

S-0001-K18 (Freq: LIC=B)
Given QGA 100, RPV Control, and various conditions, EVALUATE the conditions and DESCRIBE how to proceed through the flowchart including transitions within QGA 100, to other QGA procedures, station operating procedures, or SAMGs.

KEY VERIFY RESCORE

Student ID Number

ESSAY SCORE

USE NO. 2 PENCIL ONLY

- EXAMPLE:
- MAKE *DARK* MARKS
- ERASE *COMPLETELY* TO CHANGE
- MAKE NO STRAY MARKS

TEST RECORD	
PART 1	
PART 2	
TOTAL	

MP-100AS
Firmware Ver. 3.3+

NAME Ro Key (Last) (First)

SUBJECT _____ INSTRUCTOR _____

DATE _____ PERIOD _____

ADVANTAGE 1200™ #28380-RR 04/04 99669 US Patent No. 6,079,624
APPERSON PRINT MANAGEMENT SERVICES (800) 827-9219
REORDER ONLINE www.appersonedu.com 01/07

	(T)	(F)				
1	A	B	C	D	E	B
2	A	B	C	D	E	D
3	A	B	C	D	E	D
4	A	B	C	D	E	B
5	A	B	C	D	E	C
6	A	B	C	D	E	C
7	A	B	C	D	E	B
8	A	B	C	D	E	D
9	A	B	C	D	E	B
10	A	B	C	D	E	A
11	A	B	C	D	E	C
12	A	B	C	D	E	C
13	A	B	C	D	E	C
14	A	B	C	D	E	D
15	A	B	C	D	E	B
16	A	B	C	D	E	D
17	A	B	C	D	E	A
18	A	B	C	D	E	A
19	A	B	C	D	E	B
20	A	B	C	D	E	D
21	A	B	C	D	E	C
22	A	B	C	D	E	A
23	A	B	C	D	E	C
24	A	B	C	D	E	A
25	A	B	C	D	E	A
26	A	B	C	D	E	B
27	A	B	C	D	E	C
28	A	B	C	D	E	C
29	A	B	C	D	E	A
30	A	B	C	D	E	C
31	A	B	C	D	E	D
32	A	B	C	D	E	D
33	A	B	C	D	E	B
34	A	B	C	D	E	A
35	A	B	C	D	E	C
36	A	B	C	D	E	B
37	A	B	C	D	E	D
38	A	B	C	D	E	A
39	A	B	C	D	E	C
40	A	B	C	D	E	A
41	A	B	C	D	E	B
42	A	B	C	D	E	A
43	A	B	C	D	E	C
44	A	B	C	D	E	D
45	A	B	C	D	E	A
46	A	B	C	D	E	A
47	A	B	C	D	E	B
48	A	B	C	D	E	D
49	A	B	C	D	E	B
50	A	B	C	D	E	C

MP-100AS

RESCORE

KEY 50

SCORE

KEY VERIFY RESCORE

Student ID Number

ESSAY SCORE

USE NO. 2 PENCIL ONLY

- EXAMPLE: A B C D E
- MAKE *DARK* MARKS
- ERASE *COMPLETELY* TO CHANGE
- MAKE NO STRAY MARKS

TEST RECORD	
PART 1	
PART 2	
TOTAL	

MP-100AS
Firmware
Ver. 3.3+

NAME _____ (Last) (First)

SUBJECT _____ INSTRUCTOR _____

DATE _____ PERIOD _____

	(T)	(F)				
51	A	**B**	C	D	E	B
52	A	B	**C**	D	E	C
53	**A**	B	C	D	E	A
54	A	**B**	C	D	E	B
55	A	**B**	C	D	E	B
56	A	B	**C**	D	E	C
57	A	**B**	C	D	E	B
58	A	B	C	**D**	E	D
59	**A**	B	C	D	E	A
60	A	B	**C**	D	E	C
61	A	B	C	**D**	E	D
62	A	B	**C**	D	E	C
63	**A**	B	C	D	E	A
64	A	B	C	**D**	E	D
65	A	**B**	C	D	E	B
66	A	B	**C**	D	E	C
67	A	B	C	**D**	E	D
68	**A**	B	C	D	E	A
69	A	B	**C**	D	E	C
70	A	**B**	C	D	E	B
71	A	B	C	**D**	E	D
72	**A**	B	C	D	E	A
73	A	**B**	C	D	E	B
74	A	B	C	**D**	E	D
75	A	**B**	C	D	E	B
76	A	B	C	D	E	
77	A	B	C	D	E	
78	A	B	C	D	E	
79	A	B	C	D	E	
80	A	B	C	D	E	
81	A	B	C	D	E	
82	A	B	C	D	E	
83	A	B	C	D	E	
84	A	B	C	D	E	
85	A	B	C	D	E	
86	A	B	C	D	E	
87	A	B	C	D	E	
88	A	B	C	D	E	
89	A	B	C	D	E	
90	A	B	C	D	E	
91	A	B	C	D	E	
92	A	B	C	D	E	
93	A	B	C	D	E	
94	A	B	C	D	E	
95	A	B	C	D	E	
96	A	B	C	D	E	
97	A	B	C	D	E	
98	A	B	C	D	E	
99	A	B	C	D	E	
100	A	B	C	D	E	

MP-100AS

RESCORE

KEY 75

SCORE

KEY VERIFY RESCORE

Student ID Number

ESSAY SCORE

USE NO. 2 PENCIL ONLY

- EXAMPLE:
- MAKE *DARK* MARKS
- ERASE *COMPLETELY* TO CHANGE
- MAKE NO STRAY MARKS

TEST RECORD	
PART 1	
PART 2	
TOTAL	

MP-100AS
Firmware
Ver. 3.3+

NAME S'RO KEY
(Last) (First)

SUBJECT _____ INSTRUCTOR _____

DATE _____ PERIOD _____

ADVANTAGE 1200™ #28380-RR 04/04 99669 US Patent No. 6,079,624
APPERSON PRINT MANAGEMENT SERVICES (800) 827-9219
REORDER ONLINE www.appersonedu.com 01/07

	(T)	(F)				
1	A	B	C	D	E	B
2	A	B	C	D	E	D
3	A	B	C	D	E	D
4	A	B	C	D	E	B
5	A	B	C	D	E	C
6	A	B	C	D	E	C
7	A	B	C	D	E	B
8	A	B	C	D	E	D
9	A	B	C	D	E	B
10	A	B	C	D	E	A
11	A	B	C	D	E	C
12	A	B	C	D	E	C
13	A	B	C	D	E	C
14	A	B	C	D	E	D
15	A	B	C	D	E	B
16	A	B	C	D	E	D
17	A	B	C	D	E	A
18	A	B	C	D	E	A
19	A	B	C	D	E	B
20	A	B	C	D	E	D
21	A	B	C	D	E	C
22	A	B	C	D	E	A
23	A	B	C	D	E	C
24	A	B	C	D	E	A
25	A	B	C	D	E	A
26	A	B	C	D	E	B
27	A	B	C	D	E	C
28	A	B	C	D	E	C
29	A	B	C	D	E	A
30	A	B	C	D	E	C
31	A	B	C	D	E	D
32	A	B	C	D	E	D
33	A	B	C	D	E	B
34	A	B	C	D	E	A
35	A	B	C	D	E	C
36	A	B	C	D	E	B
37	A	B	C	D	E	D
38	A	B	C	D	E	A
39	A	B	C	D	E	C
40	A	B	C	D	E	A
41	A	B	C	D	E	B
42	A	B	C	D	E	A
43	A	B	C	D	E	C
44	A	B	C	D	E	D
45	A	B	C	D	E	A
46	A	B	C	D	E	A
47	A	B	C	D	E	B
48	A	B	C	D	E	D
49	A	B	C	D	E	B
50	A	B	C	D	E	C

MP-100AS

RESCORE

KEY 50

SCORE

KEY VERIFY RESCORE

Student ID Number

ESSAY SCORE

USE NO. 2 PENCIL ONLY

- EXAMPLE:
- MAKE *DARK* MARKS
- ERASE *COMPLETELY* TO CHANGE
- MAKE NO STRAY MARKS

TEST RECORD	
PART 1	
PART 2	
TOTAL	

MP-100AS
Firmware
Ver. 3.3+

NAME _____ (Last) (First)

SUBJECT _____ INSTRUCTOR _____

DATE _____ PERIOD _____

	(T)	(F)				
51	A	B	C	D	E	B
52	A	B	C	D	E	C
53	A	B	C	D	E	A
54	A	B	C	D	E	B
55	A	B	C	D	E	B
56	A	B	C	D	E	C
57	A	B	C	D	E	B
58	A	B	C	D	E	D
59	A	B	C	D	E	A
60	A	B	C	D	E	C
61	A	B	C	D	E	D
62	A	B	C	D	E	C
63	A	B	C	D	E	A
64	A	B	C	D	E	D
65	A	B	C	D	E	B
66	A	B	C	D	E	C
67	A	B	C	D	E	D
68	A	B	C	D	E	A
69	A	B	C	D	E	C
70	A	B	C	D	E	B
71	A	B	C	D	E	D
72	A	B	C	D	E	A
73	A	B	C	D	E	B
74	A	B	C	D	E	D
75	A	B	C	D	E	B
76	A	B	C	D	E	B
77	A	B	C	D	E	D
78	A	B	C	D	E	C
79	A	B	C	D	E	A
80	A	B	C	D	E	B
81	A	B	C	D	E	C
82	A	B	C	D	E	D
83	A	B	C	D	E	B
84	A	B	C	D	E	D
85	A	B	C	D	E	A
86	A	B	C	D	E	B
87	A	B	C	D	E	C
88	A	B	C	D	E	C
89	A	B	C	D	E	A
90	A	B	C	D	E	A
91	A	B	C	D	E	C
92	A	B	C	D	E	D
93	A	B	C	D	E	B
94	A	B	C	D	E	A
95	A	B	C	D	E	D
96	A	B	C	D	E	C
97	A	B	C	D	E	D
98	A	B	C	D	E	C
99	A	B	C	D	E	B
100	A	B	C	D	E	A

MP-100AS

RESCORE

KEY 100

SCORE