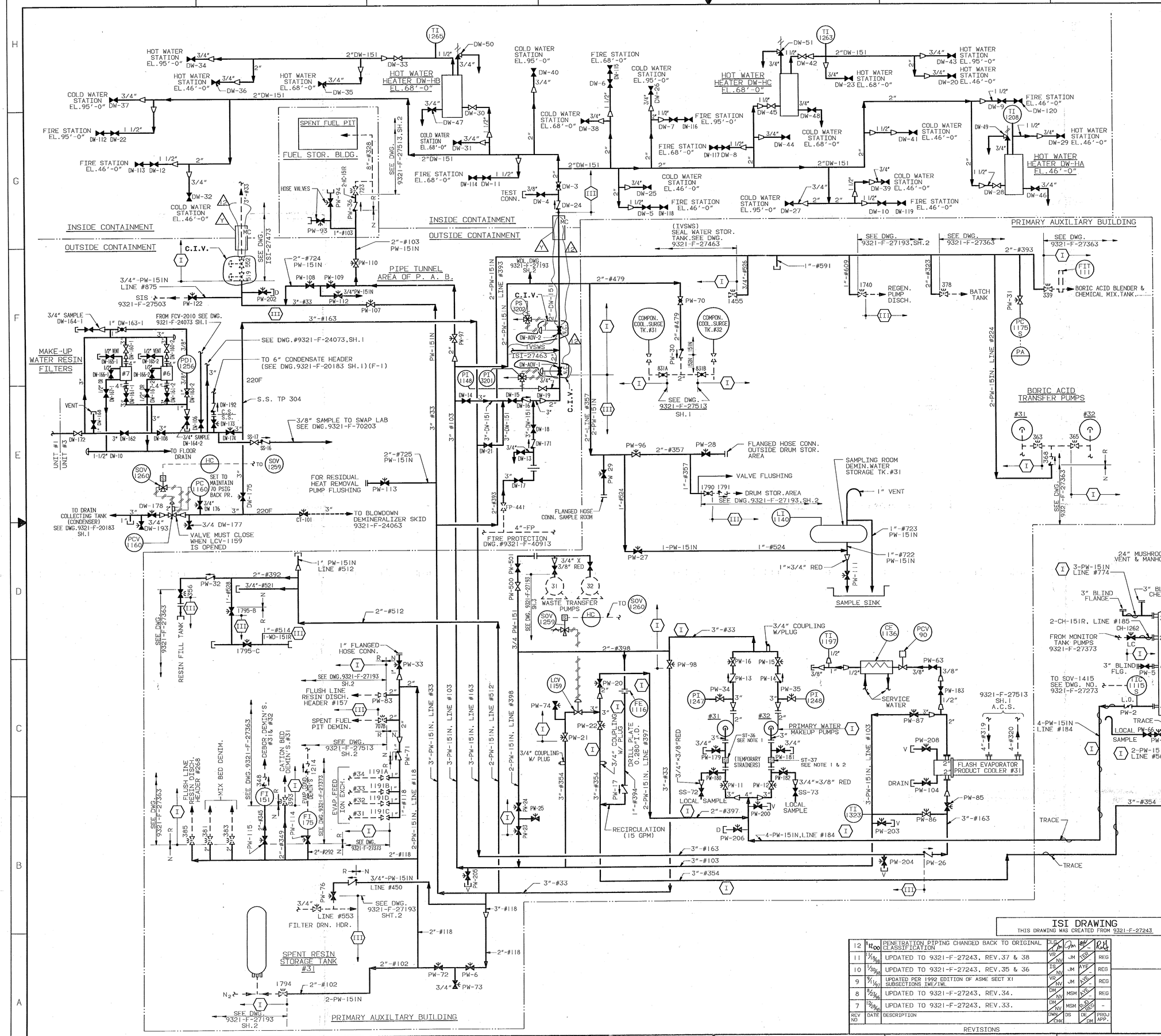

NOTE

1. TEMPORARY STRAINER (ST-36 & ST-37) IS PLACED IN THE FLANGED SPOOL PIECE DURING INITIAL FLUSHING OPERATIONS. STRAINER MUST BE REMOVED BEFORE PLANT START-UP. CAPPED LINE IS CONNECTED TO PRESSURE GAUGE DURING INITIAL FLUSHING.
2. STRAINER SCREENS ST-36 & ST-37 HAVE BEEN REMOVED PER MWR NO. 92-04279-00 AND MWR NO. 92-01991-00 RESPECTIVELY.
3. PIPING SHOWN ON THIS DRAWING WAS DESIGNED AND FABRICATED TO SEISMIC CLASS II. PIPING WAS SUPPORTED SEISMIC CLASS II. EXCEPT WHERE INDICATED AS CLASS I. THIS INDICATES AREAS WHERE PIPE IS SUPPORTED IN ACCORDANCE WITH SEISMIC CLASS I.

REFERENCE DRAWINGS

9321-F-27473	REACTOR COOLANT SYSTEM
9321-F-27193,SH.2&3	WASTE DISPOSAL SYSTEM
9321-F-27363	CHEMICAL & VOLUME CONTROL SYSTEM
9321-F-27373	↓ ↓ ↓
9321-F-27513,SH.1&2	AUXILIARY COOLANT SYSTEM
9321-F-27463	ISOLATION VALVE SEAL WATER SYSTEM
9321-F-27283	NUCLEAR EQUIPMENT DRAINS
9321-C-27413	NUCLEAR LINE SCHEDULE
9321-F-27503	SAFETY INJECTION SYSTEM

NOTE:

ALL PIPING ON THIS DWG. IS SEISMIC CLASS II EXCEPT AS NOTED.

⬡ SEISMIC CLASSIFICATION

NOTES:

1. (XX) =PENETRATION NUMBER(REF.F.S.A.R.)
2. THIS DWG.SHALL BE USED ONLY FOR DETERMINING THE EXTENT OF THE INSERVICE INSPECTION BOUNDARIES.
3. BOUNDARIES SHOWN TO INCLUDE BOUNDARY VALVES WHERE APPROPRIATE.THE ACTUAL PRESSURE RETAINING I.S.I.BOUNDARIES FOR LEAKAGE AND HYDROSTATIC TESTING EXTEND ONLY TO VALVE INTERNALS THAT COMPRISE THE EFFECTIVE OBTURATOR ASSEMBLY.
4. ALL CONTAINMENT PENETRATIONS ARE ISI CLASS MC.
5. ISI BOUNDARY ENDS AT FIRST WELD INSIDE OR OUTSIDE CONTAINMENT BUILDING UNLESS OTHERWISE NOTED.

UNCONTROLLED DRAWING
Copy Date JAN 13 2000
CAUTION — Extended use of this drawing copy may result in its inaccuracy due to subsequent design changes and drawing updates

ISI LEGEND

- -1- -1- - ISI CLASS I
- -2- -2- - ISI CLASS II
- -3- -3- - ISI CLASS III

C.I.V. - CONTAINMENT ISOLATION VALVE

ISI DRAWING

THIS DRAWING WAS CREATED FROM 9321-F-27243.

REV NO	DATE	DESCRIPTION	DWN / CHK	DS	DE / DM	PROJ APP.
12	1/12/00	PENETRATION PIPING CHANGED BACK TO ORIGINAL CLASSIFICATION	CLB / JM	JM	RH / RH	-
11	1/18/98	UPDATED TO 9321-F-27243, REV.37 & 38	VP / NV	JM	KS / KS	REG
10	1/30/98	UPDATED TO 9321-F-27243, REV.35 & 36	IS / NV	JM	AYE / AYE	-
9	9/11/97	UPDATED PER 1992 EDITION OF ASME SECT XI SUBSECTIONS IWE/IWL	VP / NV	JM	KC / KC	REG
8	8/23/96	UPDATED TO 9321-F-27243, REV.34.	DM / NV	MSM	KC / KC	REG
7	12/28/95	UPDATED TO 9321-F-27243, REV.33.	DM / NV	MSM	RD / RDC	-

REVISIONS

DWN / CHK'D
DES SUPV
DISCIPLINE ENG
DISCIPLINE MGR.
PROJ APPROVAL
DATE

INDIAN POINT NO.3 NUCLEAR POWER PLANT

FLOW DIAGRAM
PRIMARY MAKE-UP WATER SYSTEM
NUCLEAR STEAM SUPPLY PLANT

NewYorkPower Authority

SCALE
DWG NO ISI-27243
REV 12
SHEET

Docket # 50-286
Accession # 9002080254
Date 1/31/2000 of Ltr
Regulatory Docket File

THIS IS A COMPUTER AIDED DESIGN DRAWING. A RECORD OF THE REVISIONS OF THIS DOCUMENT WITH APPROVAL INITIALS/SIGNATURES, IS MAINTAINED IN THE FILES OF THE NEW YORK POWER AUTHORITY.

LAST FILE-00018.0.33
PART 1 2 3
SCALE= 1.0000 SHAVID=ISI-27243 ISI-27243 ISI-27243
ACCESS=NONE
CONVERT= SUBSCH=BEL DESIG=CPL PLOT=4&12.12 LAYOUT=ISI-27243 LOADN 10-SCOVEIA PLOT= 1