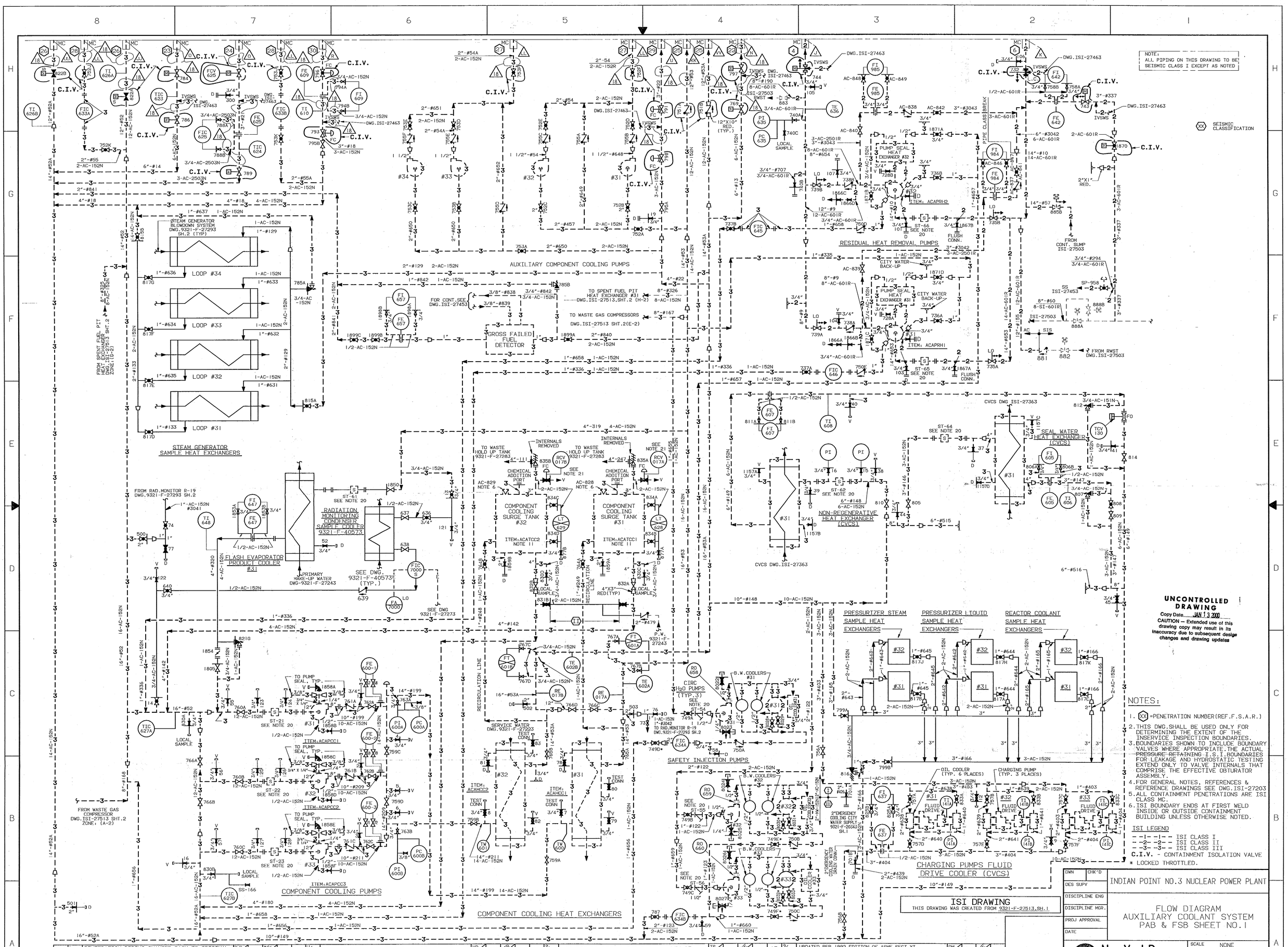

UNCONTROLLED DRAWING
Copy Date JAN 13 2000
CAUTION – Extended use of this drawing copy may result in its inaccuracy due to subsequent design changes and drawing updates

NOTES:

1. (XX) =PENETRATION NUMBER(REF.F.S.A.R.)
2. THIS DWG.SHALL BE USED ONLY FOR DETERMINING THE EXTENT OF THE INSERVICE INSPECTION BOUNDARIES.
3. BOUNDARIES SHOWN TO INCLUDE BOUNDARY VALVES WHERE APPROPRIATE. THE ACTUAL PRESSURE RETAINING I.S.I. BOUNDARIES FOR LEAKAGE AND HYDROSTATIC TESTING EXTEND ONLY TO VALVE INTERNALS THAT COMPRISE THE EFFECTIVE OBTURATOR ASSEMBLY.
4. FOR GENERAL NOTES, REFERENCES & REFERENCE DRAWINGS SEE DWG.ISI-27203
5. ALL CONTAINMENT PENETRATIONS ARE ISI CLASS MC.
6. ISI BOUNDARY ENDS AT FIRST WELD INSIDE OR OUTSIDE CONTAINMENT BUILDING UNLESS OTHERWISE NOTED.

ISI LEGEND
- -1- -1- - ISI CLASS I
- -2- -2- - ISI CLASS II
- -3- -3- - ISI CLASS III
C.I.V. - CONTAINMENT ISOLATION VALVE
* LOCKED THROTTLED.

REV NO	DATE	DESCRIPTION	DWN	CHK	DS	DE	DM	PROJ APP.
18	1/12/00	PENETRATION PIPING CHANGED BACK TO ORIGINAL CLASSIFICATION	CLG	JM				REG
17	11/18/98	UPDATED TO 9321-F-27513 SH.1, REV 26, 27 & 28	VR	NV	JM			REG
16	2/10/98	UPDATED TO 9321-F-27513 SH.1, REV 25	IS	NV	JM			REG
15	9/11/97	UPDATED PER 1992 EDITION OF ASME SECT XI SUBSECTIONS IWE/IWL	DM	NV	JM			REG

REVISIONS

DWN | CHK'D
DES SUPV
DISCIPLINE ENG
DISCIPLINE MGR.
PROJ APPROVAL
DATE

INDIAN POINT NO.3 NUCLEAR POWER PLANT

FLOW DIAGRAM
AUXILIARY COOLANT SYSTEM
PAB & FSB SHEET NO.1

NewYorkPower Authority

SCALE NONE
DWG NO ISI-27513
REV 18
SHEET 1

Docket #50-286
Accession # 003680284
Date 1/18/2000 of Ltr
Regulatory Docket File

THIS IS A COMPUTER AIDED DESIGN DRAWING. A RECORD OF THE REVISIONS OF THIS DOCUMENT WITH APPROVAL INITIALS/SIGNATURES, IS MAINTAINED IN THE FILES OF THE NEW YORK POWER AUTHORITY.