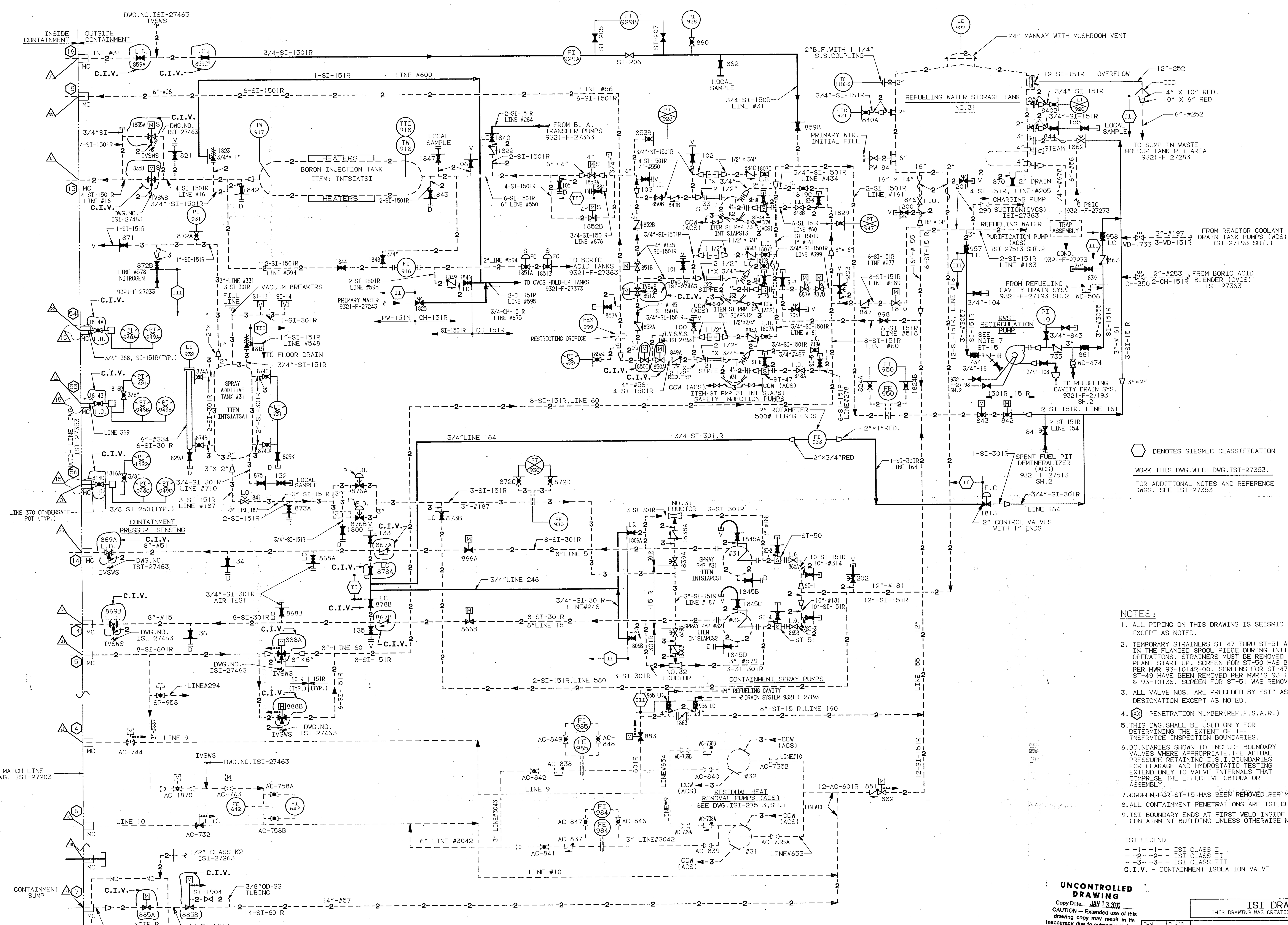

DENOTES SIESMIC CLASSIFICATION

WORK THIS DWG.WITH DWG.ISI-27353.

FOR ADDITIONAL NOTES AND REFERENCE DWGS. SEE ISI-27353

NOTES:

1. ALL PIPING ON THIS DRAWING IS SEISMIC CLASS I EXCEPT AS NOTED.
2. TEMPORARY STRAINERS ST-47 THRU ST-51 ARE PLACED IN THE FLANGED SPOOL PIECE DURING INITIAL FLUSHING OPERATIONS. STRAINERS MUST BE REMOVED BEFORE PLANT START-UP. SCREEN FOR ST-50 HAS BEEN REMOVED PER MWR 93-10142-00. SCREENS FOR ST-47, ST-48 & ST-49 HAVE BEEN REMOVED PER MWR'S 93-10134, 93-10135, & 93-10136. SCREEN FOR ST-51 WAS REMOVED PER MWR 93-10143.
3. ALL VALVE NOS. ARE PRECEDED BY "SI" AS THE SYSTEM DESIGNATION EXCEPT AS NOTED.
4. (XX) =PENETRATION NUMBER(REF.F.S.A.R.)
5. THIS DWG.SHALL BE USED ONLY FOR DETERMINING THE EXTENT OF THE INSERVICE INSPECTION BOUNDARIES.
6. BOUNDARIES SHOWN TO INCLUDE BOUNDARY VALVES WHERE APPROPRIATE.THE ACTUAL PRESSURE RETAINING I.S.I.BOUNDARIES FOR LEAKAGE AND HYDROSTATIC TESTING EXTEND ONLY TO VALVE INTERNALS THAT COMPRISE THE EFFECTIVE OBTURATOR ASSEMBLY.
7. SCREEN FOR ST-15 HAS BEEN REMOVED PER MWR 94-03447.
8. ALL CONTAINMENT PENETRATIONS ARE ISI CLASS MC.
9. ISI BOUNDARY ENDS AT FIRST WELD INSIDE OR OUTSIDE CONTAINMENT BUILDING UNLESS OTHERWISE NOTED.

ISI LEGEND

- - -1- -1- - ISI CLASS I
- - -2- -2- - ISI CLASS II
- - -3- -3- - ISI CLASS III

C.I.V. - CONTAINMENT ISOLATION VALVE

UNCONTROLLED DRAWING
Copy Date JAN 13 2000
CAUTION – Extended use of this drawing copy may result in its inaccuracy due to subsequent design changes and drawing updates

REV NO	DATE	DESCRIPTION	DWN/CHK	DS	DE/DM	PROJ APP.
15	1/12/00	PENETRATION PIPING CHANGED BACK TO ORIGINAL CLASSIFICATION	CLG			
14	6/3/99	AS BUILT PER DCR 100151398	VR/NV	JM	AYE	REG
13	4/24/98	UPDATED TO 9321-F-27503,REV.37	JF/NV	JM	AYE	REG
12	1/30/98	UPDATED TO 9321-F-27503,REV.36	IS/NV	JM	AYE	REG

REVISIONS

ISI DRAWING
THIS DRAWING WAS CREATED FROM 9321-F-27503

DWN | CHK'D
DES SUPV
DISCIPLINE ENG
DISCIPLINE MGR.
PROJ APPROVAL
DATE

INDIAN POINT NO.3 NUCLEAR POWER PLANT

FLOW DIAGRAM
SAFETY INJECTION SYSTEM
SHEET NO.2

NewYorkPower Authority

SCALE NONE
DWG NO ISI-27503
REV 15
SHEET

Docket # 50-286
Accession # 0036800284
Date 1/18/2000 of Ltr
Regulatory Docket File

THIS IS A COMPUTER AIDED DESIGN DRAWING. A RECORD OF THE REVISIONS OF THIS DOCUMENT WITH APPROVAL INITIALS/SIGNATURES, IS MAINTAINED IN THE FILES OF THE NEW YORK POWER AUTHORITY.

COMMENT= GROUP=CRL SUBGRP=REL SCALE= 1.0000 DRAWID=ISI-27503 LAST FILE=99155 09:27
DATE= 1/12/00 TIME=11.58 ACCESS=NONE ISI-27503 FMT=
LOGON ID=CGOUVEIA
PLOT= 2