ISI-20413

ISI-20413

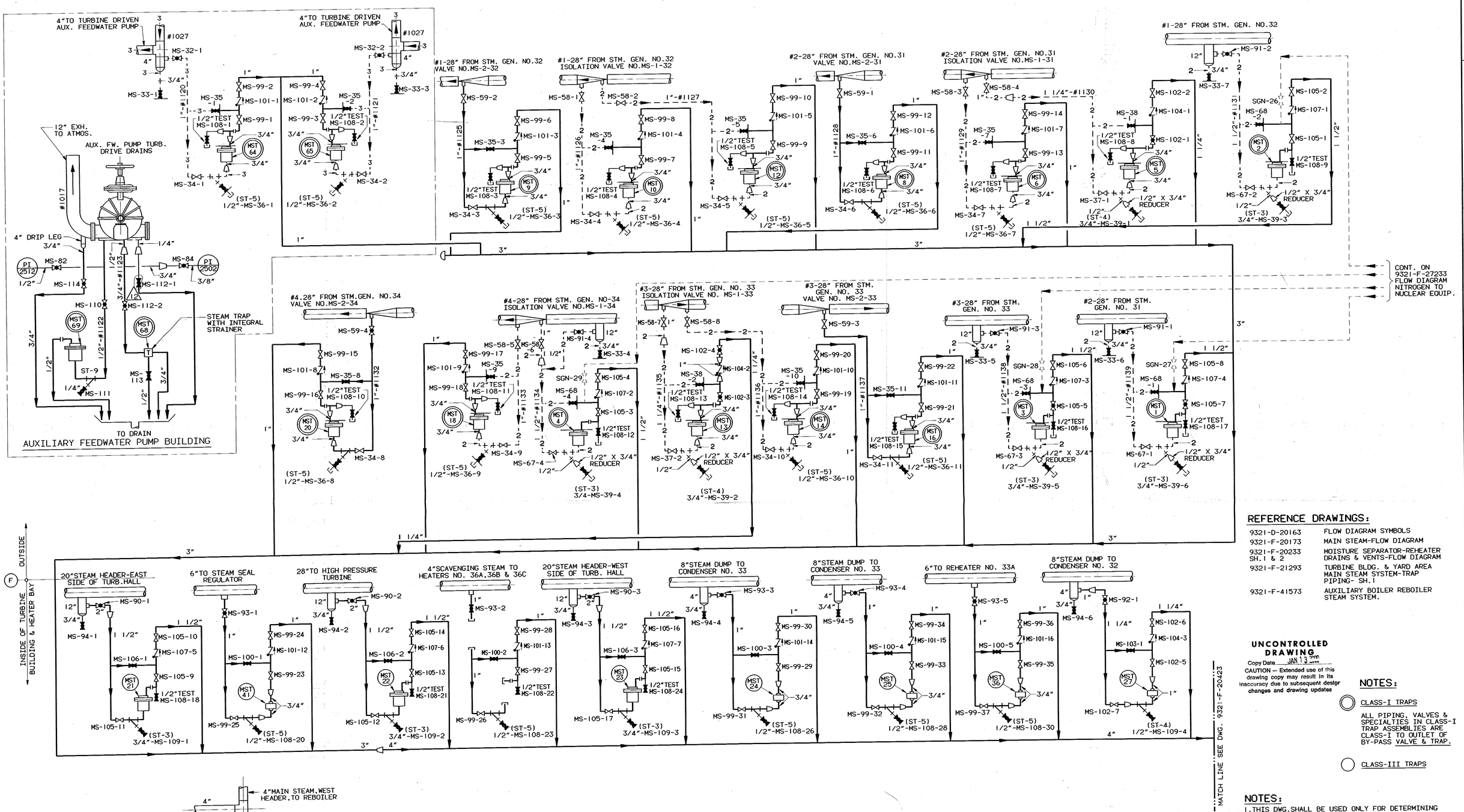

REFERENCE DRAWINGS:

9321-D-20163	FLOW DIAGRAM SYMBOLS
9321-F-20173	MAIN STEAM-FLOW DIAGRAM
9321-F-20233 SH.1 & 2	MOISTURE SEPARATOR-REHEATER DRAINS & VENTS-FLOW DIAGRAM
9321-F-21293	TURBINE BLDG. & YARD AREA MAIN STEAM SYSTEM-TRAP PIPING- SH.1
9321-F-41573	AUXILIARY BOILER REBOILER STEAM SYSTEM.

UNCONTROLLED DRAWING
Copy Date JAN 13 2000
CAUTION — Extended use of this drawing copy may result in its inaccuracy due to subsequent design changes and drawing updates

NOTES:

◎ CLASS-I TRAPS

ALL PIPING, VALVES & SPECIALTIES IN CLASS-I TRAP ASSEMBLIES ARE CLASS-I TO OUTLET OF BY-PASS VALVE & TRAP.

○ CLASS-III TRAPS

NOTES:

1. THIS DWG.SHALL BE USED ONLY FOR DETERMINING THE EXTENT OF THE INSERVICE INSPECTION BOUNDARIES.
2. BOUNDARIES SHOWN TO INCLUDE BOUNDARY VALVES WHERE APPROPRIATE.THE ACTUAL PRESSURE RETAINING I.S.I.BOUNDARIES FOR LEAKAGE AND HYDROSTATIC TESTING EXTEND ONLY TO VALVE INTERNALS THAT COMPRISE THE EFFECTIVE OBTURATOR ASSEMBLY.

ISI LEGEND

- -1- -1- - ISI CLASS I
- -2- -2- - ISI CLASS II
- -3- -3- - ISI CLASS III

C.I.V. - CONTAINMENT ISOLATION VALVE

ISI DRAWING
THIS DRAWING WAS CREATED FROM 9321-F-20413

REV NO	DATE	DESCRIPTION	DWN/CHK	DS	DE/DM	PROJ APP.
12	1/10/98	UPDATED TO 9321-F-20413, REV. 24	IS/	MSM	KVE/	REG
11	10/13/96	UPDATED TO 9321-F-20413, REV. 22 & 23	IS/NV	MSM	KVE/-	REG
10	8/23/96	UPDATED TO 9321-F-20413, REV. 21	DM/NV	MSM	R.D./REG	-
9	3/13/96	UPDATED TO 9321-F-20413, REV. 20	DM/NV	MSM	R.D./REG	-
8	12/28/95	UPDATED TO 9321-F-20413, REV. 18 & 19	DM/NV	MSM	R.D./REG	-
7	7/18/95	UPDATED TO 9321-F-20413, REV. 17	CLG/NV	MSM	R.D./REG	-
6	12/16/94	UPDATED PER ENGINEERING REQUEST	CV/FN	REG	-/AE	-
5	4/15/94	UPDATED TO 9321-F-20413, REV. 16	RL/FN	REG	-/AE	-

REVISIONS

DWN	CHK'D	INDIAN POINT NO.3 NUCLEAR POWER PLANT
DES SUPV		
DISCIPLINE ENG		FLOW DIAGRAM MAIN STEAM TRAPS SHEET NO. 1
DISCIPLINE MGR.		
PROJ APPROVAL		
DATE		

NewYorkPower Authority

SCALE: NONE
DWG NO ISI-20413 REV 12
SHEET

THIS IS A COMPUTER AIDED DESIGN DRAWING. A RECORD OF THE REVISIONS OF THIS DOCUMENT WITH APPROVAL INITIALS/SIGNATURES, IS MAINTAINED IN THE FILES OF THE NEW YORK POWER AUTHORITY.

Docket # 50-286
Accession # 9912280204
Date 1/10/2000 of 12
Regulatory Docket File

COMMENT= SUBGRP=REL GROUP=01 FORM=A1 LAYOUT= DATE: 10-15-98 PLOT= PAR LAST FILE=96060 10:05 PWX= SCALE= 1.0000 ACCESS=NONE DRAWID=ISI-20413 TIME=09.42