ISI-20193 ISI-20193

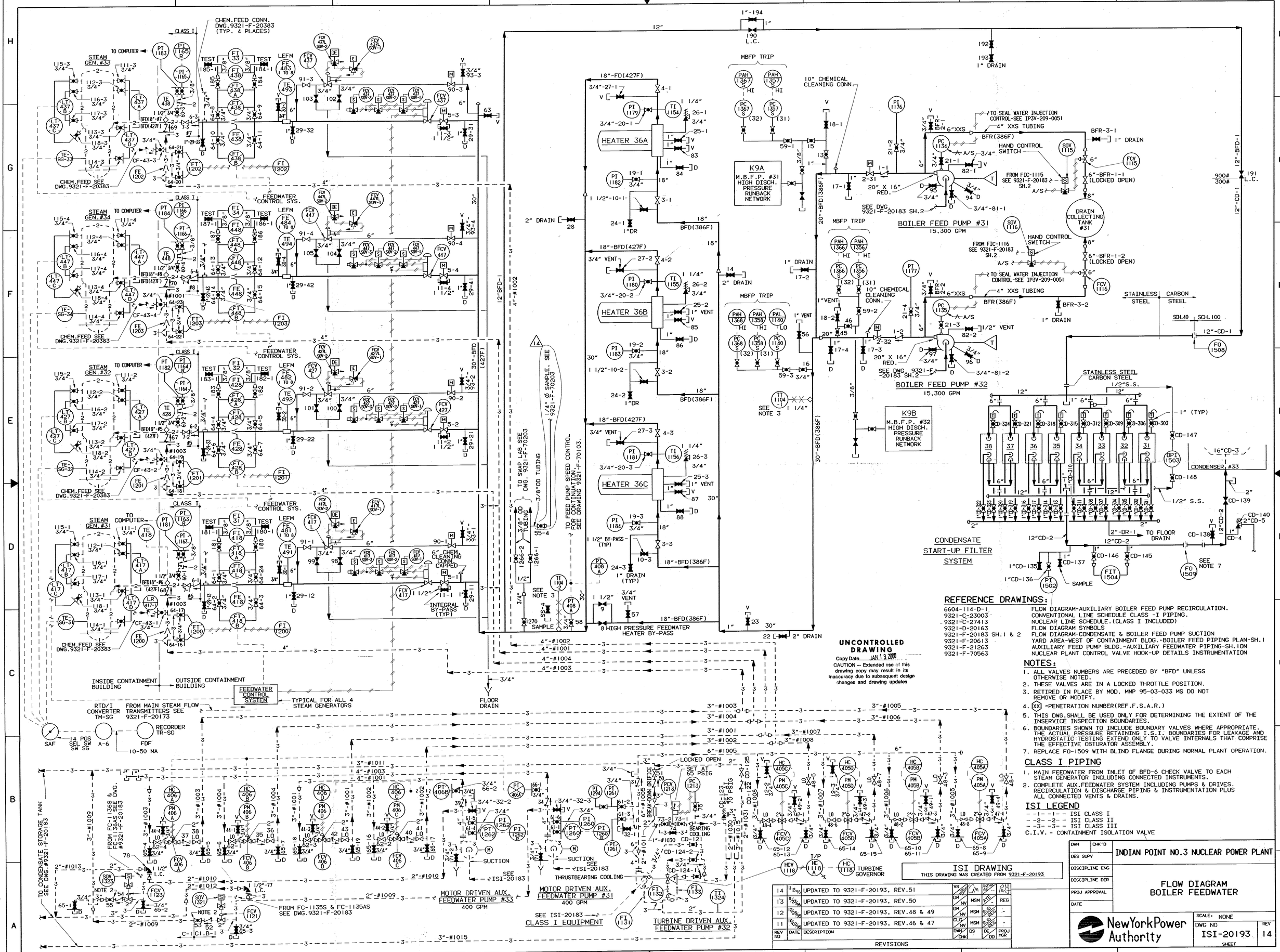

UNCONTROLLED DRAWING
Copy Date JAN 13 2000
CAUTION -- Extended use of this drawing copy may result in its inaccuracy due to subsequent design changes and drawing updates

REFERENCE DRAWINGS:

6604-114-D-1	FLOW DIAGRAM-AUXILIARY BOILER FEED PUMP RECIRCULATION.
9321-C-23003	CONVENTIONAL LINE SCHEDULE CLASS -I PIPING.
9321-C-27413	NUCLEAR LINE SCHEDULE.(CLASS I INCLUDED)
9321-D-20163	FLOW DIAGRAM SYMBOLS
9321-F-20183 SH.1 & 2	FLOW DIAGRAM-CONDENSATE & BOILER FEED PUMP SUCTION
9321-F-20613	YARD AREA-WEST OF CONTAINMENT BLDG.-BOILER FEED PIPING PLAN-SH.1
9321-F-21263	AUXILIARY FEED PUMP BLDG.-AUXILIARY FEEDWATER PIPING-SH.1ON
9321-F-70563	NUCLEAR PLANT CONTROL VALVE HOOK-UP DETAILS INSTRUMENTATION

NOTES:

1. ALL VALVES NUMBERS ARE PRECEDED BY "BFD" UNLESS OTHERWISE NOTED.
2. THESE VALVES ARE IN A LOCKED THROTTLE POSITION.
3. RETIRED IN PLACE BY MOD. MMP 95-03-033 MS DO NOT REMOVE OR MODIFY.
4. (XX) =PENETRATION NUMBER(REF.F.S.A.R.)
5. THIS DWG.SHALL BE USED ONLY FOR DETERMINING THE EXTENT OF THE INSERVICE INSPECTION BOUNDARIES.
6. BOUNDARIES SHOWN TO INCLUDE BOUNDARY VALVES WHERE APPROPRIATE. THE ACTUAL PRESSURE RETAINING I.S.I. BOUNDARIES FOR LEAKAGE AND HYDROSTATIC TESTING EXTEND ONLY TO VALVE INTERNALS THAT COMPRISE THE EFFECTIVE OBTURATOR ASSEMBLY.
7. REPLACE FO-1509 WITH BLIND FLANGE DURING NORMAL PLANT OPERATION.

CLASS I PIPING

1. MAIN FEEDWATER FROM INLET OF BFD-6 CHECK VALVE TO EACH STEAM GENERATOR INCLUDING CONNECTED INSTRUMENTS.
2. COMPLETE AUX.FEEDWATER SYSTEM INCLUDING PUMPS & DRIVES. RECIRCULATION & DISCHARGE PIPING & INSTRUMENTATION PLUS ALL CONNECTED VENTS & DRAINS.

ISI LEGEND

- -1- -1- - ISI CLASS I
- -2- -2- - ISI CLASS II
- -3- -3- - ISI CLASS III
C.I.V. - CONTAINMENT ISOLATION VALVE

ISI DRAWING
THIS DRAWING WAS CREATED FROM 9321-F-20193.

REV NO	DATE	DESCRIPTION	DWN CHK	DS	DE DD	PROJ MGR
14	11/18/95	UPDATED TO 9321-F-20193, REV.51	VR			
13	8/23/95	UPDATED TO 9321-F-20193, REV.50	DM NV	MSM	KE	REG
12	12/28/94	UPDATED TO 9321-F-20193, REV.48 & 49	DM NV	MSM	R.D. REG	-
11	10/02/94	UPDATED TO 9321-F-20193, REV.46 & 47	CLG NV	MSM	R.D. REG	-

REVISIONS

DWN	CHK'D
DES SUPV	
DISCIPLINE ENG	
DISCIPLINE DIR	
PROJ APPROVAL	
DATE	

INDIAN POINT NO.3 NUCLEAR POWER PLANT

FLOW DIAGRAM
BOILER FEEDWATER

NewYorkPower Authority

SCALE: NONE
DWG NO ISI-20193 REV 14
SHEET

THIS IS A COMPUTER AIDED DESIGN DRAWING. A RECORD OF THE REVISIONS OF THIS DOCUMENT WITH APPROVAL INITIALS/SIGNATURES, IS MAINTAINED IN THE FILES OF THE NEW YORK POWER AUTHORITY.

Docket # 50-286
Accession # 0214820254
Date 1/18/2000 of Ltr
Regulatory Docket File