ENCLOSURE 2

MFN 09-804

Draft Marathon-Ultra Presentation Slides

Non-Proprietary Version

IMPORTANT NOTICE

This is a non-proprietary version of Enclosure 1 to MFN 09-804, from which the proprietary information has been removed. Portions of the enclosure that have been removed are indicated by an open and closed bracket as shown here [[ ]]

GE Hitachi
Nuclear Energy

Marathon-Ultra Control Rod Blades

Scott Nelson
Sr. Control Rod Blade Design Engineer
Scott.nelson@gene.ge.com
910-819-5829

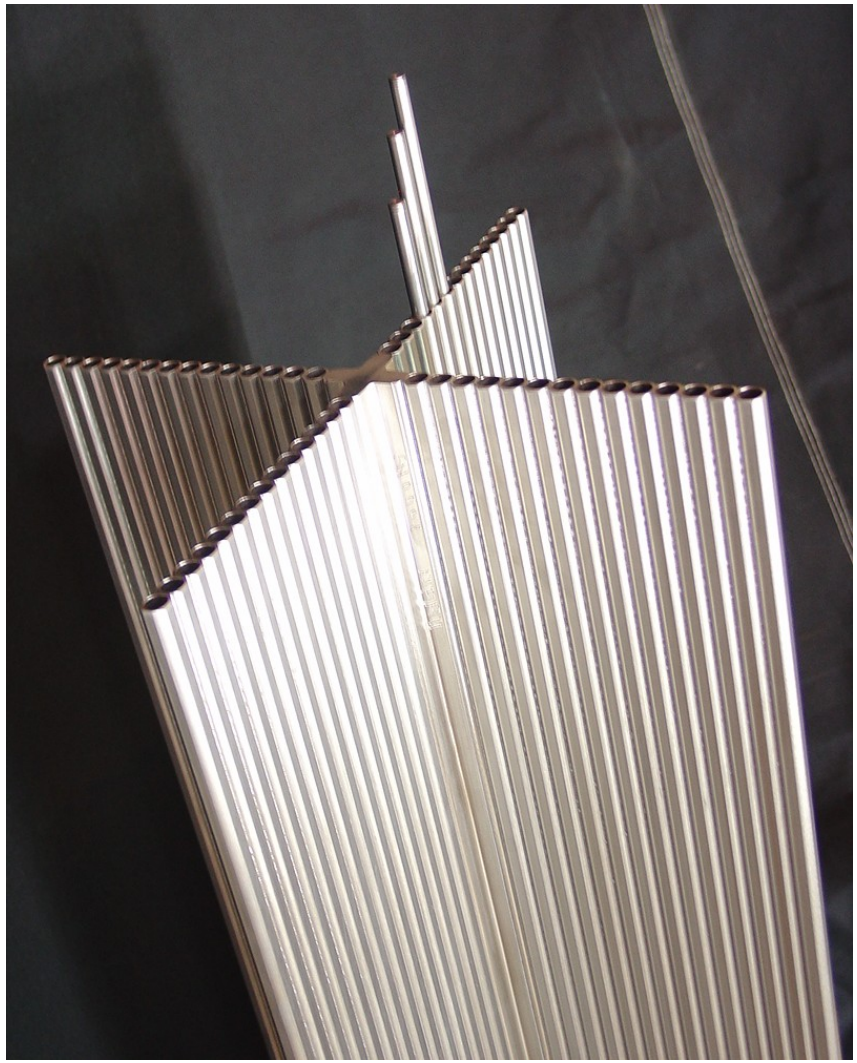

HITACHI

Marathon Control Rod Description

- Approved in NEDE-31758P-A (1991)
- B_4C powder capsule within a 'square' absorber tube.
- Provides a gap between capsule and absorber tube to accommodate irradiated B_4C swelling and helium release.
- Hafnium rods used in high-duty edge locations.

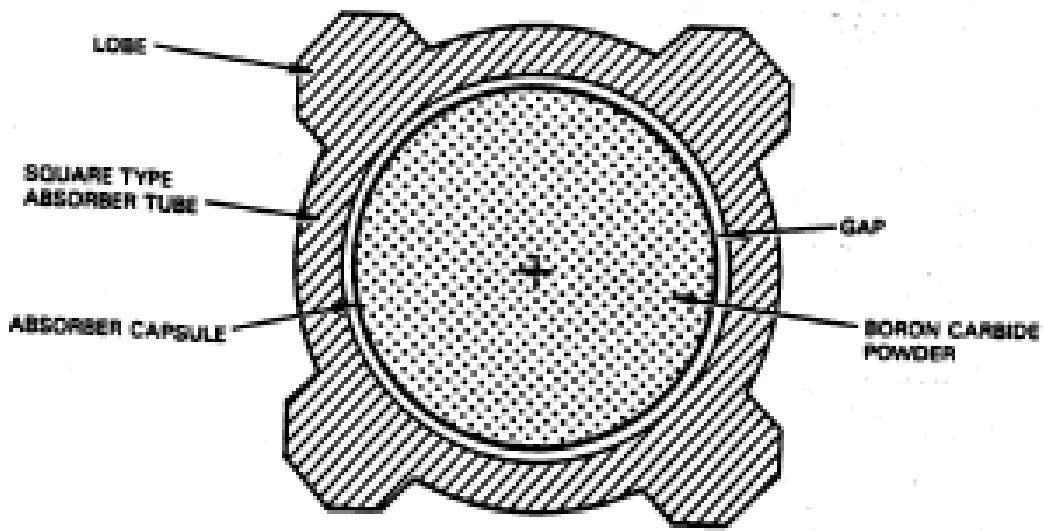

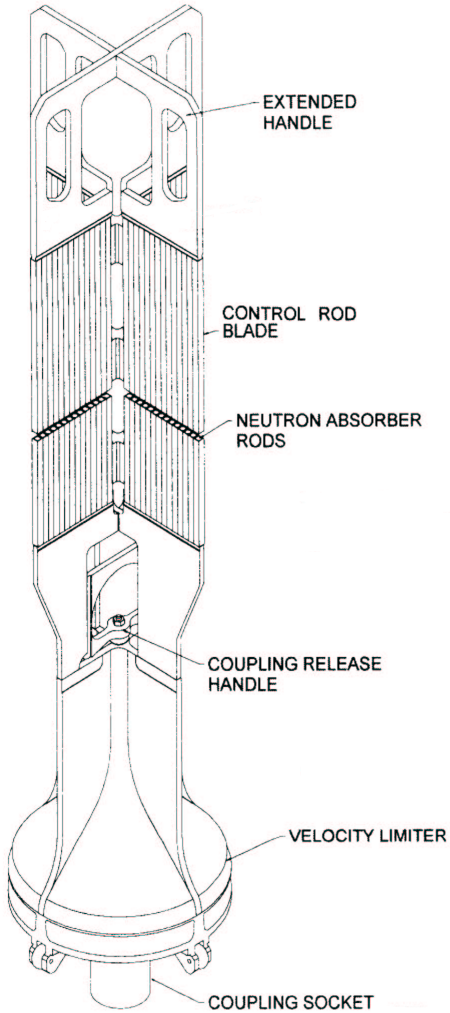

Marathon-5S Control Rod Description

- Approved in NEDE-33284P-A Rev. 2 (2009)
- Simplified Absorber Tube Geometry
- All B_4C Capsule Design (no hafnium)
- Thicker Wall Capsule Body Tube
- Full-Length Tie Rod

[[

]]

[[

]]

Marathon-5S Status

- In the United States:
  - Two lead units installed in a domestic BWR in September 2009.
  - First inspections planned for fall 2011.
- Internationally:
  - Licensed for a European BWR in 2009.
  - Four lead units installed in June 2009.
  - First inspections planned for summer 2011.

Marathon-Ultra - Comparison

- Long-life version of the Marathon-5S.
- The outer structure is identical.
  - Same simplified absorber tubes and tie rod.
  - Identical IASCC-resistant type 304S material.
  - Same laser welding technology and process.
  - Same manufacturing processes and equipment.

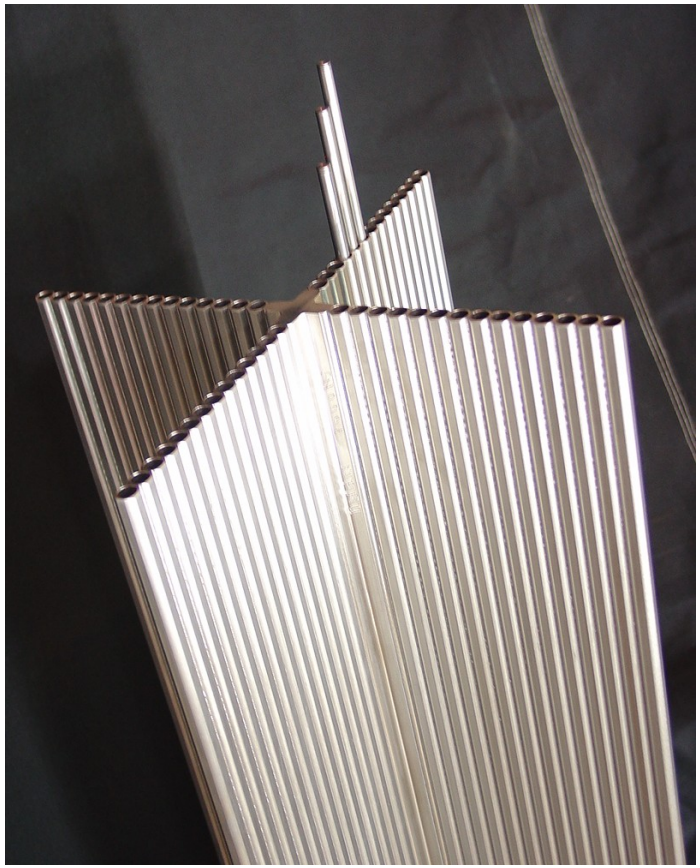

Marathon-Ultra - Comparison

- The only difference is the absorber load pattern:
  - Uses hafnium rods in high-duty locations. (Hafnium rods are identical to those in the original Marathon)

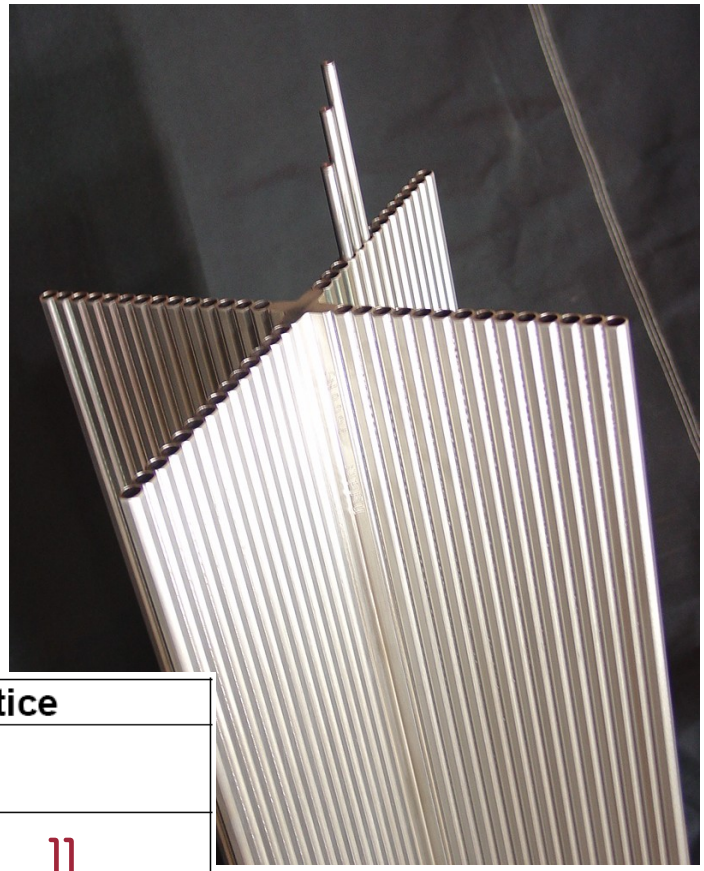

Marathon-Ultra	D/S Lattice	C Lattice
Minimum Absorber Tube ID After Welding	[[	
Maximum Hafnium Rod Diameter		]]

HITACHI

Marathon-Ultra - Comparison

- The only difference is the absorber load pattern:
  - Uses thin-wall capsule body tubes, comparable to the original Marathon.

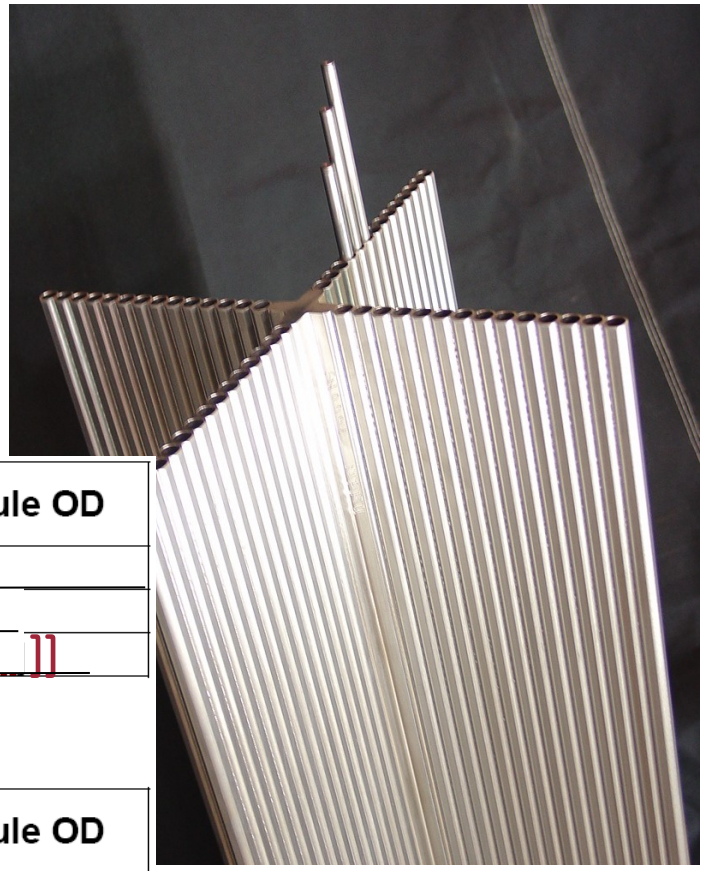

D/S Lattice	Nominal Wall Thickness	Nominal Capsule OD
Marathon	[[	
Marathon-5S		
Marathon-Ultra		]]

C Lattice	Nominal Wall Thickness	Nominal Capsule OD
Marathon	[[	
Marathon-5S		
Marathon-Ultra		]]

HITACHI

Load Pattern Comparison – D Lattice

[[

]]

Load Pattern Comparison – C Lattice

[[

]]

Load Pattern Comparison – S Lattice

[[

]]

Marathon-Ultra – Design Criteria and Methodology

- Design Criteria are Identical:
  - Stress, strain and fatigue limits
  - Insertion capability
  - Material compatibility
  - Reactivity worth criteria
- Design Methodologies are Identical:
  - Nuclear analysis methodology
  - Finite element analyses
  - Scram loads
  - Bending Loads
  - Absorber burn-up related loads

Marathon-Ultra – Design Analyses

- Since the outer structure of the Marathon-Ultra is the same as the Marathon-5S, several analyses are numerically and otherwise identical:
  - Materials evaluation – stress corrosion cracking, welding, micro-fatigue, etc
  - Absorber tube pressurization capability
  - Seismic and fuel channel bow induced bending

Marathon-Ultra – Design Analyses

- Remaining analyses use identical methodologies, with slightly different inputs:
  - Nuclear reactivity worth and lifetime analysis
  - Scram loads
  - Thermal analysis
  - Boron carbide swelling analysis
    - Uses the same conservative B_4C swelling design basis as Marathon-5S
    - [[

]]

Marathon-Ultra – B4C Capsule Swelling Strain Calculation

Parameter	D/S Lattice	C Lattice
Absorber Tube ID Before Welding (in)	[[	
Minimum Absorber Tube ID After Welding (in)		
Capsule OD (in)		
Capsule Wall Thickness (in)		
Maximum Capsule OD_0 (in)		
Maximum Capsule ID_0 (in)		
Capsule ID strain (in/in)		
Capsule OD strain (in/in)		
Capsule OD at 100% local depletion (in)		]]

Marathon-Ultra – Hafnium Application

- The Marathon-Ultra uses identical hafnium rods as the original Marathon design.
  - Incorporates a large diametral gap inside the absorber tube to accommodate any thermal expansion.

Parameter	D/S Lattice	C Lattice
DIA_{70}, Maximum Hafnium Rod Diameter (in)	[[	
DIA_{550}, Maximum Hafnium Diameter, Thermal Expansion (in)		
Minimum Absorber Tube Inside Diameter After Welding (in)		]]

HITACHI

Marathon-Ultra – Hafnium Application

- The Marathon-Ultra uses identical hafnium rods as the original Marathon design.
  - [[

    ]]
  - GEH has never observed a material failure in a Marathon absorber tube containing a hafnium rod.

Marathon-Ultra – Hafnium Application

- GEH collected dimensional data during on-going Post-Irradiation Examination work. (minimum absorber tube ID is [[ ]])

[[

]]

HITACHI

Marathon-Ultra – Hafnium Application

- Conclusions
  - No observed material failures due to hafnium during Marathon inspections.
  - [[
  -]]

Marathon-Ultra – Surveillance

- The Marathon-5S SE contains a requirement for a surveillance program.
  - Visual inspections of two (2) lead-depletion assemblies.
- Since the outer structure of the Marathon-Ultra is identical, GEH suggests that the visual inspections of Marathon-5S control rods apply equally to the Marathon-Ultra.
- Therefore, GEH proposes visual inspections of two (2) Marathon-Ultra control rods only in the depletion range beyond the Marathon-5S lifetime.