FEB 23 1968

U. S. ATOMIC ENERGY COMMISSION

DIVISION OF REACTOR LICENSING

REPORT TO ADVISORY COMMITTEE ON REACTOR SAFEGUARDS

IN THE MATTER OF

CONSOLIDATED EDISON COMPANY OF NEW YORK, INC.

INDIAN POINT NUCLEAR GENERATING STATION UNIT NO. 2

DOCKET NO. 50-247

Note by the Director of the Division of Reactor Licensing

The attached report has been prepared by the Division of Reactor Licensing for consideration by the ACRS at its March 1968 meeting.

ABSTRACT

The Consolidated Edison Company's proposed Indian Point Unit No. 2 was reviewed by the Committee during the August 1966 meeting. The Committee's letter included a number of areas in which further staff and Committee review would be required. This report is a summary of the status of our review of these areas. Our principal conclusions are as follows:

- The piping arrangement for the ECCS has been found acceptable; however, further analytical verification of the capability of the ECCS to meet core cooling criteria will be required.

- The detailed core internals deflection calculations during blowdown have not been presented. These calculations will be reviewed during the operating license review.

- The applicant has made an initial effort to provide for primary system access for in-service inspection and will provide a detailed and comprehensive plan for in-service inspection in the FSAR.

- The applicant will install a pit crucible. We do not regard the pit crucible to be a part of the safety design of the facility.

We have reviewed the information submitted by the applicant in response to the items delineated in the ACRS letter of August 1966, requiring staff and ACRS followup. While we feel some progress toward the final acceptance of these items has been made, the requirements for review of the final design details analyses and evaluations for a provisional operating license review have not been fulfilled because the applicant has not given us sufficient information. In view of the timing, we intend to complete our review of these items in conjunction with the operating license review of the facility.

TABLE OF CONTENTS

1.0 INTRODUCTION

The Committee reviewed the application of the Consolidated Edison Company of New York, Inc., for authorization to construct Indian Point Nuclear Generating Unit No. 2 during its August 1966 meeting. In its letter of August 16, 1966, concerning Indian Point Unit No. 2, the Committee indicated specific areas of plant design in which further review would be desirable prior to irrevocable commitments in the design and construction of the plant.

These technical areas of interest have been addressed by the applicant in the sixth supplement to the PSAR (received April 18, 1967) and the seventh supplement to the PSAR (received October 18, 1967). The seventh supplement was submitted after we had found the sixth supplement generally not responsive to the Committee's concerns. This was noted in a letter dated August 2, 1967, to Consolidated Edison. In this report we give our evaluation of the various subject areas noted in the August 16, 1966 ACRS letter and covered in the sixth and seventh supplements. We have had meetings on July 18, 1967, December 28, 1967 (ACRS Subcommittee meeting), February 2, 1968, and February 13, 1968, to discuss this material.

In this report we have indicated where we believe the analysis or design presented in the supplements is acceptable or where changes in design or further analysis in the Final Safety Analysis Report may be required. In this regard, we expect Consolidated Edison to file a Final Safety Analysis Report in support of its application for a provisional operating license within the next two months.

The applicant has requested a review by the Committee at this interim time to satisfy their contention that the words in the August 16, 1966 letter constitute a legal requirement for at least a review and preferably a letter.

Section 2 of this report contains a discussion of the design of the Emergency Core Cooling System, including a review of how it compares to present criteria. Section 3 is a review of the final design of the reactor internals with emphasis on ability to withstand blowdown forces and pressures.

In Section 4 the reactor primary coolant system is discussed with respect to design and fabrication. In-service inspection and leak detection methods are included in Sections 5 and 6, respectively. Revisions in core design affecting reactivity and reactivity transients are reviewed in Section 7. The design and design basis of the reactor pit crucible are reviewed in Section 8. Quality control and stress analysis of the containment structure liner is discussed in Section 9.

2.0 EMERGENCY CORE COOLING SYSTEM

The applicant's design criteria for the ECCS are (1) maximum calculated zircaloy clad temperature for the entire core will not exceed the zircaloy melting temperature with the core in its original heat transfer geometry, and (2) zircaloy-water reactions will be limited to an insignificant amount. Our current thinking is that the ECCS should provide all of the following functions: (a) limit the peak clad temperature to well below the clad melting temperature, (b) terminate the temperature transient before the core geometry necessary for core cooling is lost, (c) limit the fuel clad-water reaction to less than one percent of the total fuel clad mass, and (d) reduce the core temperature and remove core heat until the core will remain covered without recirculation and replenishment of coolant. Of these it appears that the most stringent requirements on ECCS capability are (a) and (c) which essentially correspond to the applicant's design criteria.

To establish that the proposed ECCS can provide functions (a) and (c), the applicant presented ECCS performance analyses based on computer codes developed by Westinghouse. These codes are: FLASH which is used to calculate rate of coolant blowdown through a break, rate of coolant influx from the ECCS, core and loop pressure drop and flow, energy influx from the core, and energy efflux via the steam generators; CHIC-KIN which is the reactor kinetics code used to calculate the fuel energy input to the coolant during blowdown and to calculate the void shutdown for large breaks; and LOCTA-R2 which is used to calculate the transient temperatures of the fuel pellet and cladding and to calculate the extent of clad-water reaction.

In using these codes to determine the performance capability of the Indian Point 2 ECCS, the applicant has made conservative assumptions with regard to the more significant parameters, as follows: break opening time (all breaks assumed to occur instantaneously), reactor coolant pumps trip (loss of normal a.c. power coincident with reactor scram), reactor shutdown (minimum void formation model for the void shutdown calculation), blowdown heat transfer (no credit taken for transition boiling), vessel water level (no credit taken for boiling froth height), accumulator spillage (one of four assumed to spill regardless of break size and location), and core heat transfer during reflooding (uniform coefficient of 25 $Btu\text{-}hr^{-1}\text{-}ft^{-2}\text{-}°F^{-1}$).

Based on our present understanding of the blowdown and core heatup phenomena, we conclude that the codes used by Westinghouse conservatively predict the course of a loss-of-coolant accident. However, we cannot conclude that the models employed in these codes completely simulate the complicated blowdown heat transfer process or account for all of the blowdown mechanisms that might occur. AEC safety research programs in the areas of blowdown heat transfer and emergency core cooling (e.g., LOFT semiscale and FLECHT) should provide sufficient data within the next several years to substantiate the adequacy of the present physical models. However, this data will not be available to support our review of the Indian Point 2 application for an operating license.

The applicant has presented results of blowdown and core heatup analyses for the double ended (9.2 ft^2), 6 ft^2, 3 ft^2, and 0.5 ft^2 breaks in the cold leg of one of the reactor coolant loops. The cold leg breaks result in

higher peak clad temperatures than the corresponding hot leg breaks because of core flow reversals during blowdown and steam binding above the core during accumulator injection; both of these effects were considered in the applicant's analyses.

For these breaks the performance of the ECCS, with 3 of 4 accumulators, 1 of 2 high-head safety injection pumps and 1 of 4 low-heat pumps operating, is summarized by the following table:

Cold Leg Break Size, ft^2	Maximum Clad Temperature, °F	Percent Clad-Water REaction
9.2 (double ended)	1800	0
6.0	1440	0
3.0	1450	0
0.5	1750	0

The peak temperatures calculated for these breaks are for below the zircaloy melting temperature (3375°F) and are below the threshold for significant zircaloy-water reaction (1800°F). To assess the calculated margin in ECCS initiating time, the applicant compared core heatup calculations assuming the ECCS to be inoperative to the calculations assuming minimum ECCS. The results indicate that even if accumulator injection is delayed by about 40 seconds for the 3 ft^2 break or 16.5 seconds for the 9.2 ft^2 break clad melting would be prevented.

The applicant has indicated that an analysis of ECCS performance for small breaks (<0.5 ft^2) and calculations of fuel perforations for the break spectrum will be presented in the FSAR. Based on our current reviews of the Zion and

Prairie Island applications, we anticipate that the conservative Westinghouse calculation will predict large numbers of fuel perforations and it is not clear that function (b) above will be met. Westinghouse is currently doing R&D work on fuel perforations in order to better define this area. We intend to complete our examination of this area as part of the operating license review.

Requirement (d) for long-term cooling is satisfied by the redundancy of low-head pumps and ECC recirculation subsystems as described below. Also, there is sufficient water in the refueling water storage tanks to insure long-term coolant availability for the recirculation cooling mode.

Except for the areas listed above (i.e., experimental verification of physical models and effect of fuel perforations), we have concluded that the ECCS proposed for Indian Point 2 can perform its required functions.

The design and layout of the ECCS has been presented by the applicant in the seventh supplement and during our February 13, 1968 meeting. Important additions and revisions have been made since the previous review by the Committee. Four accumulators have been added to the original low pressure safety injection system to rapidly reflood the core in the event of a large pipe break. Low flow was the principal shortcoming of the original system as indicated in the ACRS letter on Indian Point 2. In addition, concentrated boric acid storage tanks have been added to the high-head system by manifolding to the suction of the high-head pumps.

The applicant has proposed to add valves in the high-head and low-head subsystems in an effort to meet our current requirements with regard to single failures, redundancy, and isolation. We currently require subsystem redundancy to insure (1) adequate emergency coolant injection at high vessel

pressure even if a single-active component fails to operate, and (2) adequate low-head coolant delivery even if (a) a single-active component fails at any time or (b) a single-passive component fails when the low-head subsystems are operating in a long-term recirculation cooling mode. We also require that all ECCS lines which penetrate containment have isolation valves to limit ECCS leakage exterior to containment.

The ECCS as now proposed is shown in Figure 2-1. This figure is a simplified version of Figure 1-1 in the seventh supplement, and it shows the valves which have been added to accommodate passive failures in the long-term (low-head) subsystems and to provide leakage isolation capabilities. The additions or changes are enclosed in broken lines. The spectrum of break sizes for which various combinations of high-head safety injection, low-head safety injection, and accumulator injection are effective is given in Figure 2-2.

The high-pressure injection system consists of three pumps discharging to two separate headers. Two out of three pumps discharging through either a single or both headers will perform the required core cooling functions. The pump discharge header arrangement allows for active component failure without affecting the required performance. In addition, the valves added in the inlet header, the valve arrangement in the discharge header, and the valve added at the RWST outlet now allow this system to accommodate a passive failure in the long-term recirculation cooling mode. Although the arrangement is somewhat different than that proposed for the recent Westinghouse four-loop plants, we conclude that it meets the desired objective and is acceptable.

The applicant has recognized that it will be necessary to modify the design in the line between the containment sump and the residual heat removal

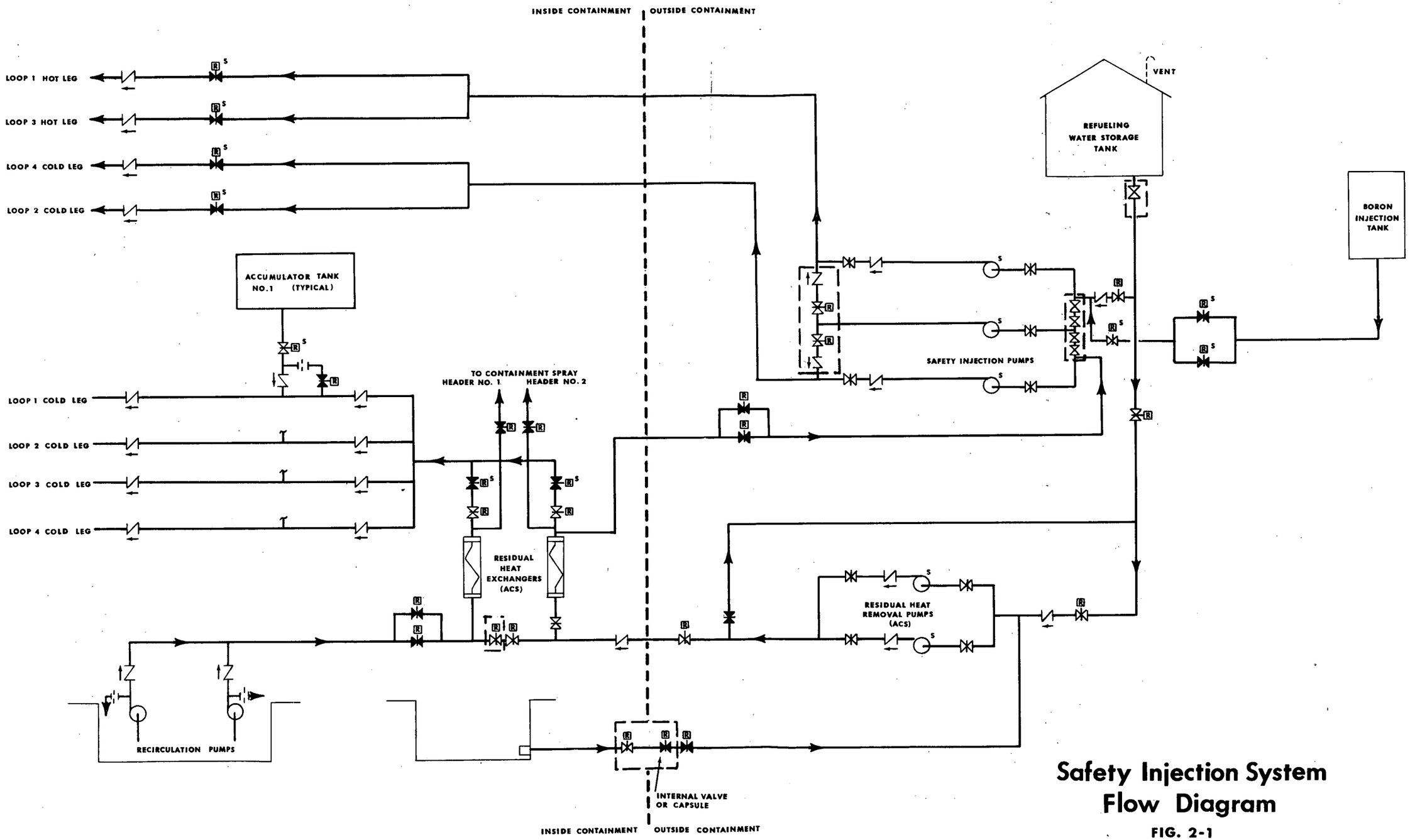

Safety Injection System Flow Diagram

FIG. 2-1

RANGE OF PROTECTION BY SAFETY INJECTION SYSTEM

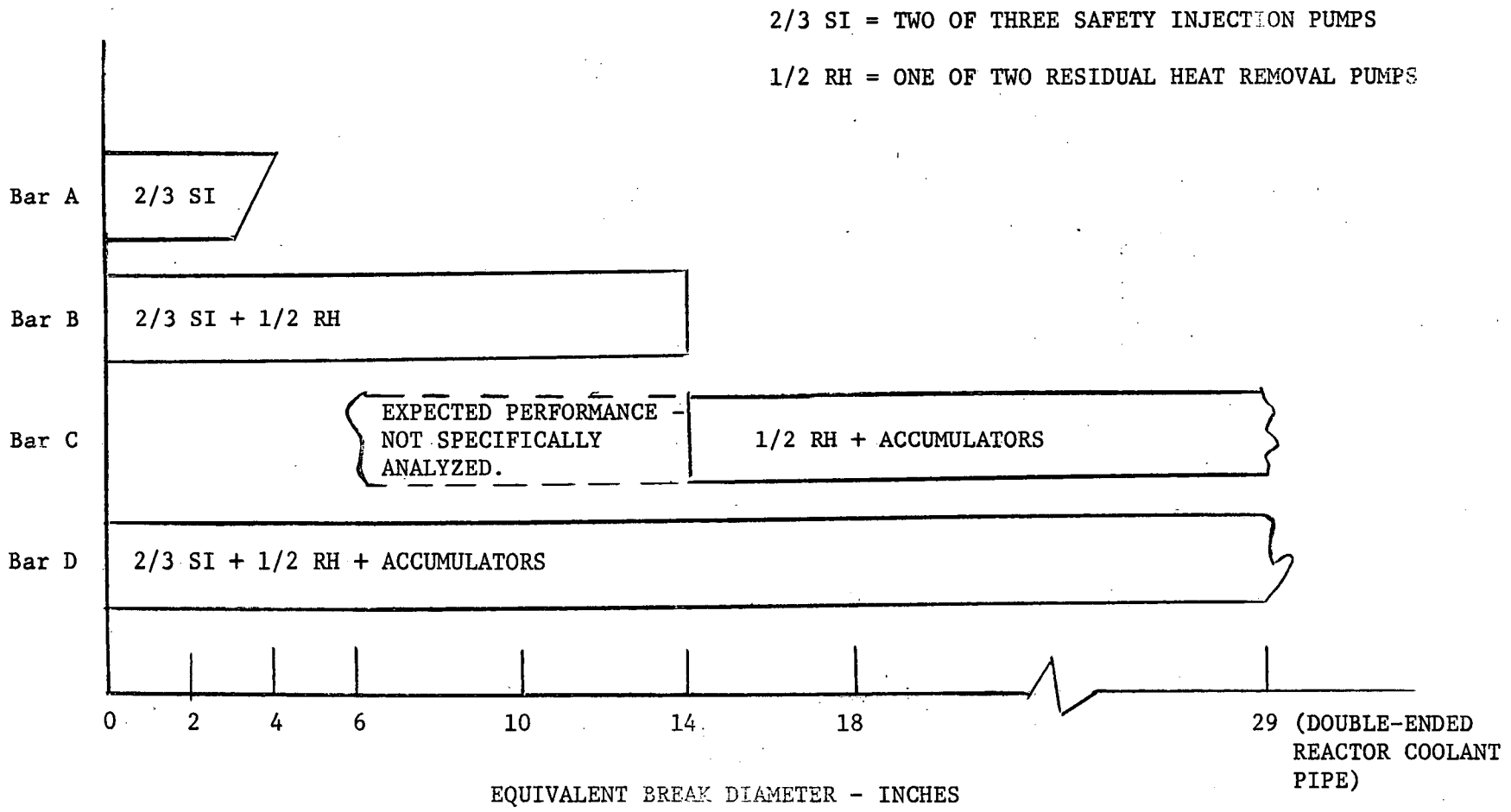

Fig. 2-2

pump inlet header since a single failure of the valve adjacent to the containment could result in unacceptable leakage from the containment. He will install an isolation valve inside the containment or place the first external valve in a leak-tight capsule as shown in Figure 2-1.

Long-term cooling following a loss-of-coolant accident can be provided from either of two separate subsystems, one of which is located inside and the other outside the containment. Each subsystem has a separate containment sump and a separate pair of pumps; any one of the four pumps would be capable of providing the necessary flow. If the cold leg injection header were to fail, recirculation cooling would have to be via the high-head safety injection pumps which could be fed by either the recirculation pumps or the residual heat removal pumps. The applicant intends to analyze the consequences of this mode of operation with the resulting less efficient residual heat exchanger operation. With the addition of the valve in the inlet header of the residual heat exchangers and the valve in the containment sump (or placing the external valve in a capsule), the long-term subsystems can now accommodate any single-passive failure. Our preliminary evaluation of the piping arrangement of the low-head system is that it is acceptable. As noted, further analytical verification of the capability of the systems under all modes of operation will be required.

The recirculation subsystem inside containment is a unique arrangement and additional supporting information concerning the performance of the two recirculating pumps and their sumps has been obtained from the applicant. Each recirculating pump is a vertical shaft pump with the impeller located in the sump and the motor drive elevated above the water level in the containment.

Minimim NPSH for this pump is ten feet of water, assuming saturated water at the surface. Elevation of various portions of the sump, pump, and containment water levels are given in the accompanying table.

ELEVATIONS RELATIVE TO RECIRCULATING PUMPS

	Elevation Feet	Containment Water Inventory* Gallons
Bottom of motor drive	51.0	
	50.0	350,000
Motor drive base plate	47.5	125,000
Pump impeller eye	37.5	
Bottom of sump	33.0	

* One inch of water height is equivalent to about 1000 ft^3 of water or approximately 7500 gallons.

Water volume in the containment necessary to provide NPSH for the recirculation pumps is 125,000 gallons. The totally enclosed motor drives remain above the water surface level after discharge of the entire volume of the refueling water storage tank to the containment. The applicant has indicated orally that these motor drives have been tested separately at high temperatures and at high humidity conditions representative of the containment environment following a loss-of-coolant accident. The motor drives apparently have not been tested under conditions of simultaneous high temperature and high humidity. We intend to investigate this point during our operating license review and will require such simultaneous tests.

A single failure in the Component Cooling Water (CCW) loop would negate the function of the Residual Heat Exchangers and would require shutdown of the Safety Injection Pumps and the Recirculation Pumps. Under these circumstances,

all cooling would be dependent upon the containment fan-coolers. The fan-coolers are cooled by the service water system which has been modified to include isolation valves in the various headers so that a single-passive failure could be accommodated.

The applicant proposes no change in the CCW system for the following reasons:

1. The system is in operation continuously and thus, in effect, is being continuously tested.
2. The system is accessible for inspection.
3. The system is missile-protected in the containment and is Class 1 seismic design.
4. The operating pressure is 2/3 the design pressure.

Nevertheless, our design criteria require the accommodation of a single passive failure in long-term systems. To demonstrate the failure of the CCW system would not be unacceptable, the applicant will present analyses of containment pressure and temperature transients in the FSAR, assuming only the fan-coolers function. If this analysis results in acceptable containment pressure and temperature transients, we conclude that adequate back-up to the CCW loop is available and the single CCW loop is acceptable.

Initiation of the safety injection system (pumped systems) is by coincidence of a 2-of-3 low pressurizer pressure signal with a 2-of-3 low pressurizer level signal. The staff opinion is that this situation favors no false actuation too strongly. The applicant has agreed to add a high containment pressure signal which by itself would initiate SIS action. We believe this is acceptable.

Study of potential effects of thermal shock on reactor components during emergency core cooling injection is continuing at Westinghouse. An initial topical report ("The Effect of Safety Injection on a Reactor Vessel and Its Internals Following a Loss-of-Coolant Accident," December 1967) has been issued by them and is currently under review by the staff. Westinghouse is continuing their fracture mechanics analysis to establish the extent of crack propagation through the vessel thickness. Resolution of the thermal shock problem depends on successful completion of this analysis.

3.0 REACTOR INTERNALS

The reactor internals and core are designed to meet normal design loads of mechanical, hydraulic, and thermal origin plus operational basis earthquake loads (OBE).* Stress limit criteria used are as established in Section III of the ASME Boiler and Pressure Vessel Code with the exception of fuel rod cladding which is not covered by the code. Seismic stresses are combined in the most conservative way and are considered primary stresses. The primary system and other safety-related piping design did not include concurrent blowdown and seismic stresses as a design basis. The applicant will, however, calculate the stresses and deformations under these conditions and will submit this analysis during our operating license review.

During reactor blowdown resulting from a loss-of-coolant accident, the stated criterion is that the reactor internals must maintain a coolable heat transfer geometry and must permit insertion of the rod cluster control (RCC) assemblies to shut down the reactor. The limitations on the reactor internals during blowdown are, therefore, best expressed as maximum deflections allowed without loss of the above function. Using the results of a blowdown analysis performed with the Satan Code, the applicant has calculated deflections expected in key portions of the reactor internals and compared them to estimates of maximum deflection possible without loss of function.

In all cases the predicted deflections presented in Section 2 of the seventh supplement are less than the values needed to assurance performance.

---

* OBE - that earthquake giving rise to ground acceleration at the site for which all features of the facility necessary for continued operation are designed to remain functional.

These data were calculated assuming a 50 ms break time. We feel that the applicant should perform a parametric analysis covering break-times fast enough to create acoustic waves and to show the effect of varying break-time on anticipated blowdown forces and deflections of core internals. Further, we feel that he should make estimates on a reasonable engineering basis of the time it would take a severed pipe to separate in order to help assess the most probable forces to be expected. In our discussions to date he has agreed to make a parametric analysis using break-times down to 5 ms. We intend to explore this area further with him.

We intend to review the entire blowdown analysis as part of our operating license review.

4.0 REACTOR PRIMARY COOLANT SYSTEM - DESIGN AND FABRICATION

Primary system design and fabrication techniques have been discussed by the applicant in the sixth and seventh supplements. Section III of the ASME Pressure Vessel Code was used to design the reactor vessel, pressurizer, coolant pump casings, and steam generator. The applicant has included certain design requirements for primary loop components which have been indicated to be over and above the applicable code requirements. These include:

- An independent reactor vessel stress analysis,
- A stress analysis for cyclic performance has been made for the principal primary coolant system components,
- Primary coolant pump casing has been designed to Section III, Class-A requirements, and
- The steam generator secondary side has been designed to Section III, Class-A requirements in lieu of its definition as a Section III, Class-C vessel.

Self-imposed fabrication requirements believed to be above code requirements are pre-heating of welds on the reactor vessel, pressurizer, and steam generators and a more stringent out-of-roundness requirement for the pressure vessel in the area of the thermal shield.

The Power Piping Code, ASA B31.1, was used for design of all primary system piping. Although the applicant in the design of Class I (seismic) systems and components did not consider concurrent blowdown and seismic loads as a design basis, the applicant will analyze the stresses and deformations under these conditions and will submit the results during our operating license review.

The design and fabrication of the Indian Point 2 primary system has and is taking place during a period of developing applicable criteria, codes, and techniques. The applicant has made some effort in anticipating potential new requirements and in using the newer codes to evaluate older designs. We intend to review the latter effort in our operating license review.

The applicant will be requested to evaluate the Indian Point 2 reactor vessel in terms of the AEC's "Tentative Regulatory Supplementary Criteria for ASME Code-constructed Nuclear Pressure Vessels," issued on August 23, 1967. We do not anticipate requiring the applicant to meet all of these criteria which were published some time after the vessels had been designed and fabricated; rather we will evaluate the design of the vessel in terms of the criteria to determine the acceptability of the vessel.

5.0 REACTOR PRIMARY COOLANT SYSTEM -- IN-SERVICE INSPECTION

Reactor System inspection involves: (1) non-destructive testing and inspection of material and components in the shop prior to shipment and in the field where fabrication and joining is required, (2) in-service visual inspection of the reactor loops and components during the plant's operating life, and (3) provisions in the reactor loop component design to allow for use of in-service non-destructive testing techniques currently being developed.

In connection with (1) above, the applicant has shown in the sixth and seventh supplements the extent of non-destructive testing planned for the primary loop and its components. Much of this testing is as required by the ASME Code. However, the applicant has also included additional quality assurance tests which are summarized in the above references. The applicant will employ the services of an independent testing organization to monitor the quality assurance program.

With respect to (2) above, the applicant has tabulated in detail all components and areas available for visual and/or non-destructive inspection.

Physical access for inspection and testing is limited only as follows:

- no access to the five feet of primary coolant pipe which penetrates the primary shield;
- vessel internals could be removed; however, access to the reactor pressure vessel is limited to remote underwater accessibility because of radiation levels.

In order to alleviate the limited access to the pressure vessel, several features have been incorporated into the pressure vessel design and fabrication procedures. These include:

- ultrasonic testing of all internally clad surfaces to assure adequate clad bond to allow later ultrasonic testing without obstruction.
- design of the pressure vessel in the core vicinity as a clean unclutter ed cylindrical surface to permit testing without obstruction.

As indicated above, the applicant has made an initial effort to provide for primary system access for in-service inspection. The applicant will provide a detailed and comprehensive plan for an in-service inspection program in the FSAR.

6.0 REACTOR PRIMARY COOLANT SYSTEM -- LEAK DETECTION

Primary system leak detection methods have, in the past, been developed separately to fit specific reactor and containment systems. There has been no specific program devoted to the design, developing, testing, and comparison of leak detection systems. Design of leak detection systems for new plants is, therefore, based principally on experience gained with various methods in operating plants today.

The leak detection methods to be employed in Indian Point 2 consist of the following:

- Containment air particulate monitor
- Containment radio gas monitor
- Humidity monitor
- Containment recirculation fan-cooler condensate measuring system.

Our evaluation of the adequacy and limitations of each of these methods follows.

Air Particulate Monitor

The air particulate monitor sensitivity to leak rate is dependent upon the normal leakage into the containment, low background, and sufficient suitable activity in the primary water. Assuming low background and corrosion product radioactivity (Fe, Mn, Co, Cr) of 0.2 uc/cm^3 (little or no fuel failure), the applicant indicates an ultimate maximum sensitivity for this method of 0.013 gal/min (50 cm^3 minute) if all leakage activity is suspended into the containment air. This is equivalent to roughly a crack 0.001 inch thick and 0.5 inches long in a piece of piping with a two-inch wall thickness.

Unfortunately, this method is probably totally ineffective during startup of the plant (very little activity in the primary system) when a good leak detection system is of great importance. Results would also be markedly affected by sudden additions of activity to the primary system as by a fuel element failure.

Radio-Gas Monitor

The containment radio-gas monitor is similar to the air particulate monitor, but is less sensitive and is dependent on detection of gaseous fission products. It appears to be somewhat less useful as a leakage detection device than the air particulate monitor.

Humidity Monitor

A humidity monitor offers the advantage of constant sensitivity for liquid water or steam leaks. Instruments are available which can reliably measure changes in dew point temperature of less than 1°F. The disadvantage to the method results from the seasonal change in cooling water temperature as supplied to the containment coolers and consequent adjustment of the base line dew point temperature. The applicant indicates a maximum sensitivity of this method of incremental changes in leak rate of about 2 gal/min.

Containment Recirculation Fan-Cooler Condensate Measuring System

The proposal to measure condensate flow from the containment fan-cooler coils appears to be the first of its kind. Use of this method is based on the fact that the cooling coils provide the only surface in the containment below dew point temperature. Condensate flow should, therefore, provide a direct quantitative measurement of leak rate into the containment.

Some primary system leakage, such as valve stems and pump seals, is handled directly through leakoff connections. Pressurizer relief valve leakage discharges into the pressurizer letdown tank. Other potential non-welded leakage paths closed off from the containment system are also provided for various other portions of the primary system. Water leakage into the containment is, therefore, limited to unanticipated leaks from lines or components. The applicant has estimated that the equilibrium incremental flow rate from coil condensate will be established within about one-half hour after initiation of the leak.

Leak Detection Summary

Except for the addition of the fan-cooler condensate flow measurement, the leak detection methods for Indian Point 2 reflect the present state of the art as developed in operating plants. Details of the actual instrumentation to be employed for each method have not been reported by the applicant. The proposed systems do not provide any capability for locating leaks. The actual capability of each of the systems has not been established and the background technology and experience are weak. The applicant has not proposed any pre-operational tests which would establish the capability of the various methods proposed. We have concluded, therefore, that although a number of methods are employed, each method has certain shortcomings. The applicant needs to continue to consider alternate or additional designs or procedures prior to completion of construction. The proposed leak detection systems will receive further analysis and evaluation by us during the operating license review.

7.0 CORE DESIGN CHANGES

The reactor core design has been revised by the addition of static burnable poison rods, part-length absorber rods, and a checkerboard arrangement of the fuel in the inner two zones.

Burnable Poison

The burnable poison rods will be in the form of borosilicate glass (pyrex glass) contained in stainless steel tubes and located in unused control rod positions. The burnable poison will be used in the initial core loading, but will not be required in subsequent cores.

Use of the burnable poison will eliminate the positive moderator temperature coefficient of reactivity initially present in the first core. The positive moderator temperature coefficient would lead to amplification of undesirable azimuthal and diametral power distribution variations due to xenon oscillations. This coefficient would also cause a small but significant power burst during a loss-of-coolant accident.

Reactivity worth and effect on power distribution of the burnable poison rods is presently being evaluated by Westinghouse using critical experiments and two-dimensional diffusion theory calculations.

In-pile testing of the borosilicate glass is being performed in the Saxton reactor to verify satisfactory irradiation stability of the selected design. The results of this testing will be available prior to operation of Indian Point Unit 2.

We intend to obtain additional information in these areas during our operating license review.

Part-length Absorber Rods

Part-length absorber rods have been added to the Indian Point Unit No. 2 core to control axial xenon oscillations. The part-length rods are grouped in cluster assemblies identical to control rod assemblies (RCC). Each part-length stainless steel clad rod will contain silver-indium-cadmium alloy in the bottom 36 inches, with the remaining portion (follower) filled with aluminum oxide. The eight clusters of 20 rods each are distributed in the core in roughly a cylindrical pattern so as to minimize their effect on the radial power distribution. The function of the rods is to control the axial xenon oscillations by shaping the axial power distribution. The rods will be controlled manually by the operator as a bank.

Control of the axial power distribution with these rods combined with the effect of xenon will determine the axial power peaking factor F_z. The applicant has proposed that information obtained by comparison of readings between the upper and lower ion chambers external to the core can be used to keep F_z maximum within certain boundary values. Experience on correlating in-core power distribution with external ion chambers for large reactors is presently very limited. Until the adequacy of the external ion chambers to detect axial power peaking is demonstrated, our position is that the capability for in-core neutron monitoring must also be provided to aid the operator if necessary in positioning the part-length absorber rod bank in order to assure that the axial power peaking factor is within limits.

The actual limits for F_z for the Indian Point Unit 2 are presently somewhat in doubt as it is expected that the applicant's operating license application will request an increase in power level over that requested in the

construction permit application reflecting the practice in other identical four-loop Westinghouse plants (e.g., Diablo Canyon). As the core power level is increased, tolerances in flux peaking are tightened, and the requirements for accurate flux measurements increase. Thus, until we know the expected core power level, the specific requirements for in-core instrumentation cannot be determined. However, we recognize that this matter will have to be completely resolved in the provisional operating license review of Indian Point 2.

8.0 REACTOR PIT CRUCIBLE

In the seventh supplement, the applicant presented a mechanical design and layout for the reactor pit crucible. The crucible is a refractory-lined steel vessel with a sloped bottom supported and elevated from the cavity floor by structural steel members supported on concrete pads which allow free flow of water beneath the crucible and steam flow up the space between the crucible sides and the concrete reactor cavity walls. The crucible is located below the reactor vessel and in-core instrumentation guide thimbles and extends a considerable distance into the access tunnel. The crucible is designed to support a meltdown mass of 512,000 lbs. consisting of the fuel, cladding. lower support structure, and reactor vessel bottom head. The function of the crucible is to maintain insulation of the foundation mat and liner from the molten core mass.

At a Subcommittee meeting on December 28, 1967, it was evident that the applicant had not taken into account normal design practices of refractory vessels, nor has the refractory material been selected. In our review of the final design for the operating license, we will assure that appropriate refractory design practices are used.

Thermal analysis of the performance of the crucible was calculated on the basis of the theoretical model presented previously in the fifth supplement. No new or additional theoretical or experimental information has been used, and the material presented in the seventh supplement is similar to that presented orally to the Committee by Westinghouse in August 1966. As currently visualized, this model implies that a crust of metal, metal oxides,

and solid UO_2 forms on top of the melt in the crucible separating the melt from the water in the reactor cavity above it. Although some heat transfer by conduction through the crust would take place, the principal heat transfer mechanism would be by transport of vaporized UO_2 which would bubble up through cracks in the crust, condense in the water and fall back into the mass of core material in the crucible. The maximum temperature of the melt would, therefore, reflect the boiling point at the pressure in the melt which would approximate the pressure in the containment plus the head of water and liquid UO_2 above the boiling portion of the melt.

The maximum melt temperature determines the resistance to heat flow required in the downward direction to maintain the steel surface temperature and heat flux to those conditions compatible with nucleate boiling in the water at the steel surface. Heat is transferred downward through successive layers of poorly convecting UO_2, ceramic refractory, and steel support and dissipated to water coolant by nucleate boiling. Conservative values of internal heat generation rate, thermal condictivity of molten and solid UO_2, refractory thermal conductivity, and maximum UO_2 melt temperature have been used in this analysis. The steel surface to water heat flux is within the range where pool boiling heat transfer will maintain the carbon steel vessel surface temperature to below 330°F. Adequate clearance around the crucible has been allowed to permit steam flow at low velocity and resultant pressure drop. Water supply is by downcomers feeding to directly below the crucible. There is no specific experimental basis for this model, and there are no plans to develop one in connection with the Indian Point 2 application.

Introduction of the water-cooled reactor pit crucible into the Indian Point 2 design pre-dates the addition of the accumulators to the emergency core cooling system and subsequent extensive analytical treatment of thermal and hydraulic transients during the loss-of-coolant accident. The proposal of the crucible as a part of the Indian Point 2 design was based on very considerable uncertainty in the performance of the emergency core cooling system as originally proposed for the Indian Point 2 plant. However, because of the significant improvements which have been made by the applicant in the ECCS, we do not regard the crucible to be a part of safety design of the facility.

9.0 QUALITY CONTROL AND STRESS ANALYSIS OF CONTAINMENT AND ITS LINER

The Committee, in their August 1966 letter, recommended that the regulatory staff continue to review the quality control aspects as well as stress analysis evaluation of the containment and its liner. We have received no information from the applicant on which we could base further evaluation.

10.0 CONCLUSIONS

The ACRS letter on Indian Point 2 issued on August 16, 1966, requested that additional efforts by the applicant and the staff be directed at the questions summarized in the three areas outlined below.

A. Emergency Core Cooling

Improvement of the emergency core cooling system; assesment of the ability of the core structure and pressure vessel internals to sustain the blowdown mechanical forces, design of a water-cooled crucible which could contain a meltdown and prevent containment failure.

B. Primary Coolant System

Design and fabrication of the primary coolant system, non-destructive testing, in-service inspection, and leak detection.

C. Reactivity Transients

Positive moderator temperature coefficient and xenon oscillations.

With respect to item A, above, our evaluation of the capability of the modified ECCS leads us to conclude that the system will probably be able to perform its required functions. The areas in which we have reservations are:

(1) The degree of fuel element perforation expected.

(2) Information pertaining to break size less than 0.5 sq. ft.

(3) The fact that experimental information to verify that the codes used to predict ECCS performance is not available.

(4) The effects of blowdown forces in the loss-of-coolant accident.

We will review these areas at the operating license stage.

Finally, we do not regard the reactor crucible to be a part of the safety design of the facility.

With respect to item B, progress has been made in providing additional assurance of the integrity of reactor primary coolant system. Additional efforts are in progress within the industry, in the area of in-service inspection, and leak detection. We will continue our review during our operating license review of Indian Point Unit 2.

With regard to item C, the positive moderator temperature coefficient has been eliminated by the use of burnable poisons. Part-length rods will be used to control axial xenon oscillations. The use of part-length rods may require that in-core instrumentation be provided to determine axial power peaking.

In conclusion, we have reviewed the information submitted by the applicant in response to the items delineated in the ACRS letter of August 1966, requiring staff and ACRS followup. While we feel some progress toward the final acceptance of these items has been made, the requirements for review of the final design details analyses and evaluations for a Provisional Operating License review have not been fulfilled because the applicant has not given us sufficient information. In view of the timing of this case, we intend to complete our review of these items in conjunction with the operating license review of the facility.