6.3 EMERGENCY CORE COOLING SYSTEM

The emergency core cooling system (ECCS) is discussed in detail in this section. For additional information on the ECCS see the following sections:

(1) Compliance with the 10 CRF 50.46 acceptance criteria is discussed in Section 15.4.1.

(2) Components which are necessary following a postulated loss-of-coolant accident (LOCA) over the entire range of break sizes are discussed in Sections 15.3 and 15.4.

(3) External forces and their effect on the operation of the ECCS are treated in Sections 3.7 and 3.9.

(4) Preoperational system testing is discussed in Chapter 14.

(5) The actuation of the ECCS following a LOCA is discussed in detail in Section 7.3.

(6) Instrumentation available to the operator to monitor conditions after a LOCA is found in Section 7.5.

(7) Testing intervals are discussed in the Technical Specifications.

6.3.1 Design Bases

6.3.1.1 Range of Coolant Ruptures and Leaks

The ECCS is designed to cool the reactor core as well as to provide additional shutdown capability following initiation of the following accident conditions:

(1) A pipe break or spurious valve lifting in the reactor coolant system (RCS) which causes a discharge larger than that which can be made up by the normal makeup system, up to and including the instantaneous circumferential rupture of the largest pipe in the reactor coolant system.

(2) Rupture of a control rod drive mechanism causing a rod cluster control assembly ejection accident.

(3) A pipe break or spurious valve lifting in the steam system, up to and including the instantaneous circumferential rupture of the largest pipe in the steam system.

(4) A steam generator tube rupture.

The acceptance criteria for the consequences of each of these accidents is described in Chapter 15 in the respective accident analyses sections.

6.3.1.2 Fission Product Decay Heat

The primary function of the ECCS following a LOCA is to remove the stored and fission product decay heat from the reactor core such that fuel rod damage, to the extent that it would impair effective cooling of the core, is prevented. The acceptance criteria for the accidents, as well as analyses of the accidents are provided in Chapter 15.

6.3.1.3 Reactivity Required for Cold Shutdown

The ECCS provides shutdown capability for the accidents listed above by means of chemical poison (boron) injection. The most critical accident for shutdown capability is the steam line break and for this accident the emergency core cooling system meets the criteria defined in Chapter 15. During a steam line break outside containment, the refueling water storage tank (RWST) is assumed to rupture. This could be due to a tornado induced steamline break.

6.3.1.4 Capability To Meet Functional Requirements

In order to ensure that the ECCS will perform its desired function during the accidents listed above, it is designed to tolerate a single active failure during the short term immediately following an accident, or to tolerate a single active or passive failure during the long term following an accident. This subject is detailed in Section 6.3.2.11.

The ECCS is designed to meet its minimum required level of functional performance with onsite emergency diesel power system operation (assuming offsite power is not available) or with offsite electrical power system operation (assuming onsite power is not available) for any of the above abnormal occurrences assuming a single failure as defined above.

The ECCS is designed to perform its function of ensuring core cooling shutdown capability following an accident under simultaneous safe shutdown earthquake loading. The seismic requirements are defined in Section 3.7.

6.3.2 System Design

6.3.2.1 Schematic Piping and Instrumentation Diagrams

Flow diagrams of the ECCS are shown in Figure 6.3-1.

6.3.2.2 Equipment and Component Design

Pertinent design and operating parameters for the components of the ECCS are given in Table 6.3-1. The codes and standards to which the individual components of the ECCS are designed are listed in Table 3.2-2a.

The component design and operating conditions are specified as the most severe conditions to which each respective component is exposed during either normal plant operation, or during operation of the ECCS. For each component, these conditions are considered in relation to the code to which it is designed. By designing the components in accordance with applicable codes, and with due consideration for the design and operating conditions, the fundamental assurance of structural integrity of

the ECCS components is maintained. These components are designed to withstand the appropriate seismic loadings in accordance with their safety class as given in Table 3.2-2a.

Cold Leg Injection Accumulators

These accumulators are pressure vessels filled with borated water and pressurized with nitrogen gas. One accumulator is attached to each of the cold legs of the RCS. During normal operation each accumulator is isolated from the reactor coolant system by two check valves in series. Should the RCS pressure fall below the accumulator pressure, the check valves open and borated water is forced into the RCS. Mechanical operation of the swing-disc check valves is the only action required to open the injection path from the accumulators to the core via the cold leg. The contents of only three tanks need to be injected in order to meet initial core cooling requirements. The contents of the fourth accumulator is assumed to spill through the break.

Connections are provided for remotely adjusting the level and boron concentration of the borated water in each accumulator during normal plant operation as required. Accumulator water level may be adjusted either by draining to the holdup tank or the reactor coolant drain tank or by pumping borated water from the RWST to the accumulator using a safety injection pump.

Accumulator pressure is provided by a supply of nitrogen gas within its own volume, and can be adjusted as required during normal plant operation; however, the accumulators are normally isolated from the source of this nitrogen supply. Gas relief valves on the accumulators protect them from pressures in excess of design pressure.

The accumulators are located within the containment but outside of the secondary shield wall which protects them from missiles. Since the accumulators are located within the containment, a release of the nitrogen gas in the accumulators would cause an increase in normal containment pressure. Containment pressure following release of the gas from all accumulators when evaluated in accordance with the ideal gas law, is well below the containment pressure setpoint for ECCS actuation.

Release of accumulator gas would be detected by the accumulator pressure indicators and alarms. Thus the operator could take action promptly as required to maintain plant operation within the requirements of the Technical Specification covering accumulator operability and containment pressure.

The complete listing of the design parameters for the cold leg injection accumulator is presented in Table 6.3-1.

Pumps

Residual Heat Removal (RHR) Pumps

RHR pumps are provided to deliver water from the RWST or the containment sump to the RCS should the RCS pressure fall below their shutoff head.

Each RHR pump is a single stage, vertical position, centrifugal pump. It has an integral motor-pump shaft, driven by an induction motor. The unit has a self contained mechanical seal cooling system. Component cooling water system (CCS) is the heat exchange medium. The pumps start on receipt of a safety injection signal.

A minimum flow bypass line is provided for the pumps to recirculate through the residual heat exchangers and return the cooled fluid to the pump suction should these pumps be started with their normal flow paths blocked. Once flow is established to the RCS, the bypass line is automatically closed. This line prevents deadheading the pumps and permits pump testing during normal operation.

The RHR pumps are also discussed in Section 5.5.7.

Centrifugal Charging Pumps

These pumps deliver water from the RWST through the boron injection tank to the RCS at the prevailing RCS pressure. Each centrifugal charging pump is a multistage, diffuser design, barrel type casing with vertical suction and discharge nozzles. The pump is driven through a speed increaser connected to an induction motor. The pump and speed increaser have self-contained lubrication systems with CCS as the heat exchanger medium. The pump has a mechanical seal cooling system. System process water is the normal heat exchange medium for the mechanical seal. The pumps start on receipt of a safety injection signal.

A minimum flow bypass line is provided on each pump discharge to recirculate flow back to the pump suction after cooling in the seal water heat exchanger. This is required to protect the pumps at the shutoff head. The minimum flow bypass line contains two valves in series which are provided for isolation of the mini-flow line. These valves are normally open with power to the valve operators locked out at each valve breaker to prevent inadvertent isolation of the mini-flow line. The charging pumps may be tested during normal operation through the use of the minimum flow bypass line. The centrifugal charging pumps are also discussed in Section 9.3.4.

Safety Injection Pumps

The safety injection pumps deliver water from the RWST to the RCS after the reactor coolant pressure is reduced below their shutoff head. Each high head safety injection pump is a multistage, centrifugal pump. The pump is driven directly by an induction motor. The unit has a self-contained lubrication system with CCS as the heat exchanger medium. The pump also has a mechanical seal cooling system. System process water is the heat exchange medium for the mechanical seals. The pumps start on receipt of a safety injection signal.

A minimum flow bypass line is provided on each pump discharge to recirculate flow to the RWST in the event the pumps are started with the normal flow paths blocked. This line also permits pump testing during normal operation. Redundant motor operated valves (MOVs) in series are provided for isolation of this line. These valves are closed by operator action during the recirculation mode.

Residual Heat Exchangers

The residual heat exchangers are conventional shell and U-tube type units. During normal operation of the RHR system, reactor coolant flows through the tube side while component cooling water flows through the shell side. During emergency core cooling recirculation operation, water from the containment sump flows through the tube side. The tubes are seal welded to the tube sheet.

A further discussion of the residual heat exchangers is found in Section 5.5.7.

Valves

Design parameters for all types of valves used in the ECCS are given in Table 6.3-1.

Design features employed to minimize valve leakage include:

(1) Where possible, packless valves are used.

(2) Globe valves are installed with recirculation fluid pressure under the seat to prevent stem leakage of recirculated (radioactive) water when the valves are closed.

(3) Relief valves are enclosed, i.e., they are provided with a closed bonnet.

(4) Some control valves and MOVs (2 inches and above) exposed to recirculation flow have double packed stuffing boxes and stem leakoff connections to the waste processing system. Other valves may have their leakoff line connections plugged after the packing has been upgraded with graphite packing rings. This packing configuration will reduce stem leakage to essentially zero.

Table 6.3-10 provides a list of the principal ECCS valves and their respective positions during normal and all ECCS modes of operation.

Motor-Operated Valves

The seating design of all motor operated gate valves is of the parallel disc design or the flexible wedge design. These designs release the mechanical holding force during the first increment of travel so that the motor operator works only against the frictional component of the hydraulic unbalance on the disc and the packing box friction. The discs are guided throughout the full disc travel to prevent chattering and to provide ease of gate movement. The seating surfaces are hard faced to prevent galling and to reduce wear.

Where a gasket is employed for the body to bonnet joint, it is either a fully trapped, controlled compression, spiral wound gasket with provisions for seal welding, or it is of the pressure seal design with provisions for seal welding. The valve stuffing boxes are designed with a lantern ring leakoff connection with a minimum of a full set of packing below the lantern ring and a minimum of one-half of a set of packing above the lantern ring. A full set of packing is defined as a depth equal to 1-1/2 times the stem diameter.

The motor operator incorporates a "hammer blow" feature that allows the motor to impact the discs away from the backseat upon opening or closing. This "hammer blow" feature not only impacts the disc but allows the motor to attain its operational speed prior to impact. Valves which must function against system pressure are designed such that they function with a pressure drop equal to full system pressure across the valve disc.

Manual Globe, Gate, and Check Valves

Gate valves are either wedge design or parallel disc and are straight through. The wedge is either split or solid. All gate valves have backseat and outside screw and yoke.

Globe valves of the "T" and "Y" styles are full-ported with outside screw and yoke construction.

Check valves are spring-loaded lift piston types for sizes 2 inches and smaller and swing type or tilting disc type for size 3 inches and larger. Stainless steel check valves have no body penetrations other than the inlet, outlet and bonnet. The check hinge is serviced through the bonnet.

The stem packing and gasket of the stainless steel manual globe and gate valves are similar to those described above for MOVs.

Diaphragm Valves

The diaphragm valves are of the Saunders-patent type which uses the diaphragm member for shut off with even weir bodies. These valves are used in systems not exceeding 200°F and 220 psig design temperature and pressure, respectively.

Accumulator Check Valves

The cold leg accumulator check valve is designed with a low pressure drop configuration with all operating parts contained within the body. The disc is permitted to rotate, providing a new seating surface after each valve opening.

Design considerations and analyses which assure that leakage across all the check valves located in each accumulator injection line will not impair accumulator availability are as follows:

(1) During normal operation the check valves are in the closed position with a nominal differential pressure across the disc. The differential pressure is approximately 1650 psi for the check valves in the cold leg lines. Since the valves remain in this position except for testing or when called upon to function, and are not, therefore, subject to the abuses of flow operation or impact loads caused by sudden flow reversal and seating, they do not experience significant wear of the moving parts. Hence, they are expected to function with minimal leakage.

(2) The check valves are tested for leakage when the RCS is being pressurized during the normal plant heat-up operation. This test confirms the seating of the disc and whether or not there has been an increase in the leakage since the last test. After this test is completed and prior to 1000 psig, the discharge line motor operated isolation valves are opened and the RCS pressure increase is continued. There should be no increase in leakage from this point on since increasing reactor coolant pressure increases the seating force and decreases the probability of leakage.

(3) Experience derived from check valves employed in emergency injection systems indicates that they are reliable and workable. This is substantiated by the satisfactory experience obtained from their operation at other plants where the usage of check valves is identical to their application at Watts Bar.

(4) The accumulators can accept some in-leakage from the RCS without affecting availability.

In-leakage requires, however, that the accumulator water volume and boron concentration be adjusted accordingly to remain within Technical Specification requirements. An accumulator high water level alarm is provided as an added safeguard to warn the operator that excessive accumulator in-leakage is occurring.

Relief Valves

The accumulator relief valves are sized to pass nitrogen gas at a rate in excess of the accumulator gas fill line delivery rate. The relief valves will also pass water in excess of the expected accumulator inleakage rate. This is not considered to be necessary because the time required to fill the gas space gives the operator ample opportunity to correct the situation.

Other relief valves are installed in various sections of the ECCS to protect lines which have a lower design pressure than the RCS. Relief valves normally discharge to the pressurizer relief tank. The boron injection tank relief discharges to the CVCS holdup tank (HUT). The seal water heat exchanger (centrifugal charging pump (CCP) miniflow path) discharges to the volume control tank which in turn discharges to the CVCS HUT. Table 3.9-20 lists the system's relief valves with their capacities and setpoints.

Butterfly Valves

Each main RHR line has an air-operated butterfly valve which is normally open and is designed to fail in the open position. These valves are in the full-open position during normal operation to maximize flow from this system to the RCS during the injection mode of the ECCS operation.

Piping

Piping joints are welded except where disassembly of the joint may be required. In order to assure structural integrity, pipe weld connections are fabricated to satisfy ASME Code requirements.

Minimum piping and fitting wall thicknesses are increased to account for the manufacturer's permissible tolerance on the nominal wall and an appropriate allowance for wall thinning on the external radius during any pipe bending operations in the shop fabrication of the subassemblies. The wall thicknesses are determined by formula from the 1971 ASME Code, Section III, Summer 1973 Addenda.

System Operation

The operation of the ECCS, following a loss-of-coolant accident, can be divided into two distinct modes:

(1) The injection mode in which any reactivity increase following the postulated accidents is terminated, initial cooling of the core is accomplished, and coolant lost from the primary system in the case of a LOCA is replenished, and

(2) The recirculation mode in which long-term core cooling is provided during the accident recovery period.

A discussion of these modes follows.

Break Spectrum Coverage

The principal mechanical components of the ECCS which provide core cooling immediately following a LOCA are the accumulators, the safety injection pumps, the centrifugal charging pumps, the RHR pumps, RWST, and the associated valves and piping.

For large pipe ruptures, the RCS would be depressurized and voided of coolant rapidly, and a high flow rate of emergency coolant is required to quickly cover the exposed fuel rods and limit possible core damage. This high flow is provided by the passive cold leg accumulators, the charging pumps, safety injection pumps, and the RHR pumps discharging into the cold legs of the RCS. The RHR and safety injection pumps deliver into the accumulator injection lines, between the two check valves, during the injection mode. The charging pumps deliver coolant to the cold legs during the injection mode.

Emergency cooling is provided for small pipe ruptures primarily by the high-head injection pumps. The charging pumps and safety injection pumps are commonly referred to as "high-head pumps" and the RHR pumps as "low-head pumps." Likewise, the term "high-head injection" is used to denote charging pump and safety injection pump injection and "low-head injection" refers to RHR pump injection. Small pipe ruptures are those, with an equivalent diameter of 6 inches or less, which do not immediately depressurize the RCS below the accumulator discharge pressure. The centrifugal charging pumps are designed to deliver borated water at the prevailing RCS pressure. During the injection mode, the charging pumps take suction from the RWST.

The safety injection pumps also take suction from the RWST and deliver borated water to the cold legs of the RCS. The safety injection pumps begin to deliver water to the RCS after the pressure has fallen below the pump shutoff head.

Core protection is afforded with the minimum engineered safety feature equipment. The minimum engineered safety feature equipment is defined by consideration of the single failure criteria as discussed in Sections 6.3.1.4 and 3.1. The minimum design case ensures the entire break spectrum is accounted for and core cooling design bases of Section 6.3.1 are met. The analyses for this case are presented in Sections 15.3 and 15.4.

In the minimum design case for large RCS ruptures, the cold leg accumulators and one train of active high-head and low-head pumping components serve to complete the core refill. One RHR loop is required for long-term recirculation along with components of the auxiliary heat removal system, which are required to transfer heat from the ECCS to the component cooling system and essential raw cooling water system.

If the break is small (6-inch equivalent diameter or less) the accumulators with one charging pump and one safety injection pump ensure adequate cooling during the injection mode. Long-term recirculation requires one RHRl loop and components of the auxiliary heat removal systems. The loss-of-coolant analyses are presented in Section 15.3 and 15.4.

Certain deviations (i.e., reduced component availability) from the normal operating status as given in Table 6.3-4 of the ECCS are permissible without appreciably impairing the reliability of the ECCS to provide adequate core cooling capability. Accordingly, Technical Specifications have been established to identify these types of deviations and restrict the time period that a given deviation may exist.

The Technical Specifications permit one cold leg accumulator and various pumps of the ECCS to be inoperable during power operation for a period of time. The permissible time periods for which accumulators, ECCS pumps, and associated equipment may be inoperable are listed and their bases described in the Technical Specifications.

The minimum active components will be capable of delivering full rated flow within a specified time interval after process parameters reach the setpoints for the safety injection signal. Response of the system is automatic, with appropriate allowances for delays in actuation of circuitry and active components. The active portions of the system are actuated by the safety injection signal directly, with the exception of the isolation valves for the hydrogen vent lines on the charging pump suction piping. These valves are electrically interlocked to the volume control tank outlet valves. In analyses of system performance, delays in reaching the programmed trip points and in actuation of components are established on the basis that only emergency onsite power is available. The starting sequence is detailed in Table 8.3-3.

In the loss-of-coolant accident analyses presented in Sections 15.3 and 15.4 no credit is assumed for partial flow prior to the establishment of full flow and no credit is assumed for the availability of normal offsite power sources.

For smaller loss-of-coolant accidents, there is some additional delay before the process variables reach their respective programmed trip setpoints since this is a

function of the severity of the transient imposed by the accident. This is allowed for in the analyses of the range of loss-of-coolant accidents.

Accumulator injection occurs immediately when the RCS is depressurized below accumulator operating pressure. For the cold leg injection accumulator this setpoint will be reached only in event of a large rupture.

The cold leg injection accumulators can be isolated from the RCS by closure of their motor-operated isolation valves. Since these accumulators operate only after considerable RCS pressure loss, the injection of pressurized nitrogen via the cold legs is not considered a problem.

Injection Mode After Loss of Primary Coolant

The injection mode of emergency core cooling is initiated by the safety injection signal ("SI" signal). This signal is initiated by any of the following:

(1) Low pressurizer pressure

(2) High containment pressure

(3) Low steamline pressure in any steamline.

(4) Manual actuation

Operation of the ECCS during the injection mode is completely automatic. Refer to Figure 7.3-3 (Sheet 3) for safety injection signal logic. The safety injection signal in addition to activating the ESF equipment automatically initiates the following actions:

(1) Starts the diesel generators and trips the diesel generator feeder breaker if the diesel generator is in test with the offsite power source. They will be aligned to the 6.9 kV shutdown boards if power is lost to the respective board.

(2) Starts the charging pumps, the safety injection pumps, and the RHR pumps.

(3) Aligns the charging pumps for injection by:

(a) Closing the valves in the charging pump discharge line to the normal charging line.

(b) Opening the valves in the charging pumps suction line from the RWST.

(c) Closing the valves in the charging pump normal suction line from the volume control tank when either of the two RWST suction valves are fully open. Closing these valves initiates the closing of the isolation valves at the hydrogen vent line for the charging pumps suction side piping.

(d) Opening the isolation valves located in the discharge line from the boron injection tank.

The injection mode continues until the low level is reached in the RWST coincident with a high level in the containment sump. Then the recirculation mode is initiated.

Recirculation Mode

The injection mode continues until the RHR pumps have been realigned to the recirculation mode. During the injection mode, all pumps take suction from the RWST until a low level signal from the RWST in conjunction with the "SI" signal and a high sump level signal aligns the RHR pumps to take suction from the containment sump. The RHR RWST isolation valves (FCV-74-3 and -21) are automatically closed coincident with the opening of the sump isolation valves (FCV-63-72 and -73). The automatic positioning of these valves is initiated only in the event that actuation signals are generated by the safeguards protection logic ("SI" signal), two of four RWST low level protection logic signals, and two out of four sump high level signals. It has been determined that the RHR pumps continue to receive adequate suction flow during this automatic changeover, thus there is no possibility of pump damage due to loss of suction. Alarms on RWST low level and level indications from both the sump and RWST are used by the operator to appraise the accident situation and complete the remainder of switchover sequence.

Table 6.3-3 describes the sequence of changeover operation from injection to recirculation.

The switchover initiation point and minimum assured final volume in the RWST before completion of switchover are selected on the basis of maximizing the allowable operator action time for accompanying manual operations and total water injected to the RCS while avoiding the potential problems due to low

levels in either the active sump inside containment or in the RWST. Crane wall penetrations inside containment are sealed as necessary between elevations 702.78 and 716 to initially retain more water in the active sump, thereby maximizing the active sump water level at the onset of the recirculation switchover.

The sequence (as delineated in Table 6.3-3) is followed regardless of which power supply is available (offsite or emergency onsite).

The time required to complete the sequence is essentially the time required for the operator to perform the accompanying manual operations. Controls for ECCS components are grouped together on the main control board. The component position lights indicate equipment position / status.

After the injection operation, water collected in the containment sump is cooled and returned to the RCS by the low head/high head recirculation flow path. The low head recirculation flow path consists of the RHR pumps taking suction from the containment sump and discharging the flow directly to the RCS through the residual heat exchangers and cold leg injection lines. The high head recirculation flow path consists of the residual heat removal pumps taking suction from the containment sump and discharging the flow through the residual heat exchangers to the suction of the centrifugal charging pumps and safety injection pumps. The flow from the centrifugal

charging pumps and safety injection pumps is returned to the RCS through the cold leg injection lines. The latter mode of operation assures flow in the event of a small rupture where the depressurization proceeds more slowly such that the reactor coolant system pressure is still in excess of the shutoff head of the residual heat removal pumps at the onset of recirculation.

Approximately 3 hours after the event initiation, hot leg recirculation will be initiated to assure against an excessive buildup of boric acid in the core.

The containment sump isolation valve is interlocked with its respective pump suction/RWST isolation valve to the RHR system. The interlock is provided with redundant signals from each isolation valve. This interlock prevents remote manual opening the sump isolation valve when the RWST isolation valves are open and thus prevents dumping the RWST contents into the containment sump. However, when an accident signal is present, this interlock is bypassed to allow initiation of the switchover sequence.

The RWST is protected from back flow of reactor coolant from the RCS. All connections to the RWST are provided with check valves to prevent back flow. When the RCS is hot and pressurized there is no direct connection between the RWST and the RCS. When the RCS is being cooled and the RHR system is placed in service, the RHR system is isolated from the RWST by a motor-operated valve in addition to a check valve.

Redundancy in the external recirculation loop is provided by the inclusion of duplicate charging, safety injection, and RHR pumps and residual heat exchangers. Inside the containment, the charging pump and safety injection pump discharge is piped separately into all four cold legs for the charging pumps and into all four cold legs and all four hot legs for the safety injection pumps. The low head pumps take suction through redundant lines from the containment sump and discharge through separate paths to the RCS. The containment sump design is shown in Figures 6.3-6 and 6.3-6A.

The containment sump is located in the containment floor (el 702.78 ft, 270°) below the refueling canal to provide protection from high energy pipe failures. A strainer assembly is installed on top of the sup suction pit to prevent debris that may be present after a design basis accident from degrading performance of the ECCS and containment spray system. A horizontal grating is located one foot below the ceiling to eliminate vortexing. This pit is surrounded by a six-inch high curb which is used to prevent sediment from entering the pit. A fine mesh (1/4-inch) screen located in the containment sump suction pit is used to divide the sump into two suction volumes.

The sump design does not comply fully with Regulatory Guide 1.82, Revision 0 because the plant design was well advanced when the Regulatory Guide was issued; the plant construction permit preceded the Regulatory Guide by 17 months. The design does comply fully, however, except as itemized below:

Position C.l: Dual sumps are not provided. The single sump, however, has adequate capacity and inlet area.

Position C.3: The containment sump pit has a six-inch high curb with a metal strainer assembly on top of it. This arrangement provides vortex suppression. The sump intake is not protected by two screens. It is protected by an advanced design strainer assembly that can withstand the expected debris loading and differential pressure. The perforation size is a 0.085 inch diameter hole which prevents debris from entering the inner sump.

Position C.4: The floor is level, but a six-inch high curb is provided around the sump suction pit inlet, thus providing an effect comparable to a sloped floor.

Position C.6: The trash rack and inner screen have been replaced with an advanced design strainer which has been designed to be strong enough to withstand the expected debris loading and defferential pressure.

Position C.7: The strainer assembly has mainly horizontal straining surfaces, but has been designed to obtain low approach velocity due to significant surface area. The design configuration of the entire assembly impedes the deposition or settling of debris on the strainer surfaces.

The limiting size particle which may be circulated by the ECCS and containment spray systems without causing system damage is a function of several physical parameters including:

(A) limiting system orifice size,

(B) particle concentration,

(C) particle abrasive properties, and

(D) particle hardness.

The smallest orifice which must be prevented from being plugged has been determined to be the 3/8-inch diameter containment spray nozzle orifice. Soft material of larger dimensions could easily be passed by the pumps, but would cause blockage of these orifices. Damage to the pumps could occur if significant concentrations of hard, dense, smaller debris were allowed to cause surface abrasion or binding between moving pump parts. To eliminate all such particles by smaller screen sizing would increase the threat of screen blockage. Hence, the design philosophy for the sump is to size the sump screens according to the limiting (3/8-inch) orifice size and to otherwise take advantage of settling properties to eliminate the threat of damage from the smaller, more dense particles.

No debris is expected to reach the sump and cause blockage of the sump screens during or after a LOCA. However, the effective screen opening areas are many times

larger than the combined flow area of both sump suction pipes to allow appreciable blockage from unspecified debris before any significant pressure drop is developed across the screens.

The lower containment is an open, one level area and no drains are used to route water to the sump (except the two large refueling cavity drains and two small accumulator room drains that route water away from the stainer assembly). The water simply fills the floor area and covers the sump entrance. Debris with a specific gravity greater than one will largely settle before reaching the sump inlet.

The containment sump suction pit (located in the inner sump area) has a six-inch high curb with the strainer assembly atop it. The strainer perforations are 0.085 inch diameter holes which prevent debris from entering the sump. It also serves to maintain a low inlet velocity. Debris generated during the initial blowdown of a LOCA will have an approximate minimum time of ten minutes to settle before any suction is taken from the sump.

Peeling paint has been identified as a possible hazard to the containment sump. To prevent this hazard, surface coatings will meet the requirements as described in Section 6.1.2. Further, paint used inside containment produces a hardened film having a specific gravity appreciably greater than one. Hence, gravitational settling helps assure protection against plugging of the sump with paint particles.

Equipment insulation has been designed to assure against it becoming a source of sump blockage. This has been done by providing metallic insulation on reactor coolant pressure boundary vessels and piping where required. The systems and components utilizing metallic insulation include the reactor vessel, steam generators, pressurizer, reactor coolant pumps and piping, RHR piping, safety injection piping, chemical and volume control piping, and main steam and feedwater piping. The insulation is not designed to withstand the blowdown and jet impingement forces associated with pipe breaks and sections of insulation may be stripped away if a break occurs. However, the strainer assemblywill prevent the metallic insulation from entering the containment sump.

Small sections of pipe inside containment are insulated with stainless-steel-jacketed mass-type insulation, as needed, to avoid interferences with and potential overheating of electrical cable and components. As is the case with metallic insulation, this insulation is not designed to withstand the blowdown and jet impingement forces associated with pipe breaks. However, it also poses no significant hazard to the containment sump if a pipe break were to occur. The metal jacketing may sink if located in the vicinity of the sump, but it is prevented from entering the sump by the strainer assembly. The mass-type insulation floats since its specific gravity is appreciably less than one, and it is hydrophobic grade to prevent absorption of water.

Small amounts of rockwool insulation are located inside the guard pipes of containment penetrations with flued heads as shown in Figures 6.2.4-1 through 6.2.4-4 and 6.2.4-10. This insulation is enclosed and protected by the guard pipes.

Ice condenser insulation is specifically designed not to create debris during a LOCA. Materials that could become segmented or decompose are enclosed. Solid insulation such as foam concrete is used where practical and protection is provided to prevent insulation damage from the blowdown effects of a LOCA. All equipment inside containment is designed to prevent its becoming a source of blockage to the sump.

Each recirculation line from the sump is run outside the containment to a sump isolation valve. This valve is surrounded with a steel enclosure and the section of piping joining it to the sump is run within a guard pipe welded to the enclosure. Any excessive leakage or passive failure downstream of the sump valves can be controlled and isolated by closure of the sump valve in the affected train.

External Recirculation Loop

The ECCS recirculation loop piping and components external to containment are surrounded by shielding. This shielding is designed to permit access for maintenance to a component such as a pump while the redundant pump is recirculating sump fluid.

Pressure relieving devices from portions of the ECCS located outside containment which might contain radioactivity discharge to the pressurizer relief tank, except for the BIT and seal water heat exchanger relief valves, which discharge to the CVCS holdup tank and VCT, respectively.

An analysis has been performed to evaluate the radiological effects of recirculation loop leakage as discussed in Section 15.5.3.

During recirculation, significant margin exists between the design and operating conditions (in terms of pressure and temperature) of the ECCS components.

Since redundant flow paths are provided during recirculation, a leaking component in one of the flow paths may be isolated. This action curtails any further leakage and renders the component available for corrective maintenance. Maximum potential leakage from components during recirculation mode operation is given in Table 6.3-6.

6.3.2.3 Applicable Codes and Classifications

The codes and standards to which the individual components of the ECCS are designed are listed in Table 3.2-2a.

6.3.2.4 Materials Specifications and Compatibility

Materials employed for components of the ECCS are given in Table 6.3-2. Materials are selected to meet the applicable material requirements of the codes in Table 3.2-2a and the following additional requirements:

(1) The parts of components in contact with sump solution during recirculation are fabricated of austenitic stainless steel or equivalent corrosion resistant material.

(2) The parts of components in contact with borated water are fabricated of, or clad with, austenitic stainless steel or equivalent corrosion resistant material, with the exception of pump seals and valve packing.

(3) Valve seating surfaces are hard-faced with Stellite No. 6 or equivalent to prevent galling and reduce wear.

(4) Valve stem materials are selected for their corrosion resistance, high tensile properties, and resistance to surface scoring by the packing.

The elevated temperature of the sump solution is well within the design temperature of all the ECCS components. In addition, consideration has been given to the potential for corrosion of various types of metals exposed to the fluid conditions prevalent immediately after the accident or during the long term recirculation operations.

Environmental qualification of the ECCS equipment inside the containment, which is required to operate following a LOCA is discussed in Section 3.11. The results of the program indicate that the safety features will operate satisfactorily during and following exposure to the combined containment post-accident environments of temperature, pressure, chemistry, and radiation.

6.3.2.5 Design Pressures and Temperatures

The component design pressures and temperatures are given in Table 6.3-1. These pressure and temperature conditions are specified as the most severe conditions to which each respective component is exposed during either normal plant operation or during operation of the ECCS.

For each component, these conditions are considered in relation to the code to which it is designed. By designing the components in accordance with applicable codes (see Section 3.2) and with due consideration for the design and operating conditions, the fundamental assurance of structural integrity of the ECCS components is maintained.

6.3.2.6 Coolant Quantity

The minimum storage volume for the accumulators and the RWST is given in Table 6.3-4. The minimum storage volume in the RWST and the accumulators is sufficient to ensure that, after a RCS break, sufficient water is injected and is available within the containment to permit recirculation cooling flow to the core, and to meet the net positive suction head requirements of the RHR pumps. A further discussion of coolant requirements is contained in Sections 15.3 and 15.4.

6.3.2.7 Pump Characteristics

Design parameters for the ECCS pumps are given in Table 6.3-1.

6.3.2.8 Heat Exchanger Characteristics

Residual heat exchanger characteristics are found in Section 5.5.7.

6.3.2.9 ECCS Flow Diagrams

The SIS flow diagram is given as Figure 6.3-1.

6.3.2.10 Relief Valves

The ECCS relief valves, their capacities and settings are given in Table 3.9-20.

6.3.2.11 System Reliability

6.3.2.11.1 Definitions

Period of Recovery

The period of recovery is the time necessary to bring the plant to a cold shutdown and regain access to faulted equipment. The recovery period is the sum of the short and long term periods defined below.

Incident

An incident is any natural or accidental event of infrequent occurrence and its related consequences which affect plant operation and require the use of engineered safeguards systems. Such events, which are analyzed independently and are not assumed to occur simultaneously, include the loss-of-coolant accident, steam line ruptures, steam generator tube ruptures, etc. A loss of off site power event may be an isolated occurrence or may be concurrent with any event requiring engineered safeguards systems use.

Short Term

The short-term time period is the time immediately following the incident during which automatic actions are performed, system responses are checked, type of incident is identified and preparations for long-term recovery operation are made. The short term is the injection phase for LOCA and is the first 24 hours following initiation of the event for all others.

Long Term

The long term time period is the remainder of the recovery period following the short term. In comparison with the short term, where the main concern is to prevent or limit site release, the long-term period of operation involves bringing the plant to cold shutdown conditions where access to the containment can be gained and repairs effected.

Active Failure

An active failure is the failure of a powered component, such as a piece of mechanical equipment or a component of the electrical supply system or instrumentation and control equipment, to act on command to perform its design function. Examples include the failure of a motor-operated valve to move to its correct position, the failure of an electrical breaker or relay to respond, the failure of a pump, fan or diesel generator to start, etc.

Passive Failure

A passive failure is the structural failure of a static component which limits the component's effectiveness in carrying out its design function. When applied to a fluid system, this means a break in the pressure boundary resulting in abnormal leakage not exceeding 50 gpm for 30 minutes. Such leak rates are consistent with limited cracks in pipes, sprung flanges, valve packing leaks or pump seal failures.

6.3.2.11.2 Active and Passive Failure Criteria

Active Failure Criteria

The ECCS is designed to accept any single failure at any time following the incident without loss of its protective function. The system design will tolerate the failure of any single active component in the ECCS itself or in the necessary associated service systems at any time during the period of required system operations following the incident.

A single active failure analysis is presented in Table 6.3-8, and demonstrates that the ECCS can sustain the failure of any single active component in either the short or long term and still meet the level of performance for core cooling.

Since the initial operation of the active components of the ECCS following a steam line rupture is identical to that following a LOCA, the same analysis is applicable and the ECCS can sustain the failure of any single active component and still meet the level of performance for the addition of shutdown reactivity. Passive failure is not considered for the short term.

Passive Failure Criteria

The following philosophy provides for necessary redundancy in component and system arrangement to meet the intent of the General Design Criteria on single failure as it specifically applies to failure of passive components in the ECCS. Thus, for the long term, the system is based on accepting either a passive or an active failure.

Redundancy of Flow Paths and Components for Long-Term Emergency Core Cooling

In the design of the ECCS, Westinghouse utilized the following criteria:

(1) During the long-term cooling period following a loss of coolant, the emergency core cooling flow paths are separable into two subsystems, either of which can provide minimum core cooling functions and return spilled water from the floor of the containment back to the RCS.

(2) Either of the two subsystems can be isolated and removed from service in the event of a leak outside the containment.

(3) Adequate redundancy of check valves is provided to tolerate failure of a check valve during the long term as a passive component.

(4) Should one of these subsystems be isolated in this long-term period, the other subsystem remains operable.

(5) Provisions are also made in the design to detect leakage from components outside the containment, collect this leakage and to provide for limited maintenance of the affected equipment.

Thus, for the long-term emergency core cooling function, adequate core cooling capacity exists with one flow path removed from service whether isolated due to a leak, because of blocking of one flow path, or because failure in the containment results in a spill of the delivery of one injection flow path.

The design of the ECCS includes the provision for diversion of a portion of the RHR pump flow from the low head injection path to auxiliary spray headers in the upper containment volume. For this mode the RHR pumps continue to supply recirculation flow from the containment sump to the core via the safety injection and centrifugal charging pumps.

The diversion of the RHR flow from the low head injection path to the auxiliary spray headers occurs only after the switchover to the recirculation mode and no earlier than 1 hour after initiation of the LOCA. When RHR spray is required, the operator is provided with a detailed procedure (Table 6.3-3) to follow in aligning the system for RHR spray operation. This procedure requires that low head safety injection flow to the core be terminated under single train operating condition prior to initiating RHR spray flow.

6.3.2.11.3 Subsequent Leakage from Components in Safeguards Systems

With respect to piping and mechanical equipment outside the containment, considering the provisions for visual inspection and leak detection, leaks will be detected before they propagate to major proportions. A review of the equipment in the system indicates that the largest sudden leak potential would be the sudden failure of a pump shaft seal. Evaluation of leak rate assuming only the presence of a seal retention ring around the pump shaft showed flows less than 50 gpm would result. Piping leaks, valve packing leaks, or flange gasket leaks have been of a nature to build up slowly with time and are significantly less severe than the pump seal failure.

Larger leaks in the ECCS are prevented by the following:

(1) The piping is classified in accordance with ANS Safety Class 2 and receives the ASME Class 2 quality assurance program associated with this safety class.

(2) The piping, equipment and supports are designed to ensure no loss of function for the safe shutdown earthquake.

(3) The system piping is located within a controlled area on the plant site.

(4) The piping system receives periodic pressure tests and is accessible for periodic visual inspection.

(5) The piping is austenitic stainless steel which, due to its ductility, can withstand severe distortion without failure.

Based on this review, the design of the Auxiliary Building and related equipment is based upon handling of ECCS leaks up to a maximum of 50 gpm. To assure adequate core cooling, design features are provided to prevent this limiting passive failure from causing any loss of function in the other train of the ECCS equipment due to flooding of redundant components or loss of NPSH to the ECCS pumps. Three independent means are available to provide information to the operator for use in identifying ECCS leakage into certain locations in the Auxiliary Building. These means include the Auxiliary Building flood detection system, the instrumentation and alarms associated with the drainage and waste processing systems which normally handle drainage into these areas, and redundant level indicators in the Auxiliary Building passive sump.

A flood detection system, utilizing water level detector devices, is used to monitor and actuate alarms for ECCS and other leakage at locations throughout the Auxiliary Building. Individual detectors are located in each ECCS pump compartment, in the ECCS heat exchanger rooms, and in the pipe gallery (elevation 676). A common alarm in the main control room will alert the operator when any of these flood detectors are tripped. A flood detector indicator panel, located immediately outside the control room, then identifies the exact location of the tripped detector. The detectors were preoperationally tested to verify initial operability and will be periodically tested as a part of the plant maintenance program.

Since each ECCS pump compartment is monitored by a level detection device, the operator may immediately identify which subsystem must be shut down and secured to terminate the leak.

The operator can readily accomplish this action from the main control room by stopping the appropriate subsystem pump, and by closing the corresponding sump isolation valves and individual pump discharge valves. The time necessary for the operator to detect leakage in a pump compartment is dependent on the leakage rate. A limiting 50 gpm leak in the largest ECCS pump compartment can be detected within 30 minutes. Slower leaks may require proportionally longer detection times.

Leakage into these ECCS pump compartments is piped to the floor drain collector tank for the safety injection and centrifugal charging pumps and to the Auxiliary Building floor and equipment drain sump for the RHR and containment spray pumps. The drain in each of these rooms is provided with a standpipe which assures that the setpoint for the level detector is reached prior to draining the leakage from the room. However, the standpipes each have two 1/2-inch drilled holes to allow minor normal leakage to drain from the room.

ECCS leakage into the Auxiliary Building locations other than the ECCS pump compartments is piped to the Auxiliary Building floor and equipment drain sump. This sump is provided with redundant 50 gpm pumps which are indicated in the main control

room. The floor drain collector tank is provided with overflow piping which discharges to the Auxiliary Building floor and equipment drain sump. Leakage into these areas can be detected by the flood detection system described above, by indication of sump pump operation, or by high level alarm from the sump or the floor drain collector tank. However, the exact location of the leak, if other than the ECCS pump compartment, or the subsystem from which leakage occurs, may not be immediately identified. Since ECCS leaks other than a pump seal failure are of a nature to develop very slowly and are less severe than a seal failure, the operator has an extended time period to detect and isolate the leak. Isolation of these minor leaks can be accomplished by arbitrarily selecting and isolating an ECCS subsystem and evaluating the response of the flood detector system.

The flood detection system described above is not designed to meet the requirements of IEEE-279. The detectors, indicator panel, and control room alarm are powered from nondivisional boards and do not meet the single failure criteria. However, the system is designed such that a loss of power to any individual detector will actuate the main control room common alarm. Additionally, the nondivisional boards which supply the flood detector system are powered from a Class 1E power board which is automatically loaded on the diesel generators. This ensures continued power availability to the flood detection system after an accident.

In addition to the flood detection and normal drainage processing systems described above, redundant level sensors which do meet the requirements of IEEE-279 are provided in the Auxiliary Building passive sump. These sensors, which are a part of the post accident monitoring (PAM) system as described in Section 7.5, are designed to continuously indicate and record the passive sump level. Also, the Auxiliary Building is provided with redundant ESF grade air cleanup and filtration systems as described in Section 6.5.1.

With these design ground rules, continued function of the ECCS meets minimum core cooling requirements. A single passive failure analysis is presented in Table 6.3-9. It demonstrates that the ECCS can sustain a single passive failure during the long term phase and still retain an intact flow path to the core to supply sufficient flow to maintain the core covered and affect the removal of decay heat. An event resulting in maximum leakage would have an insignificant impact on ECCS capability since a 100% capacity redundant train is available to assure the ECCS capability and since the maximum leakage represents less than 0.5% of system flow capacity.

6.3.2.12 Protection Provisions

The provisions taken to protect the system from damage that might result from dynamic effects on piping systems are discussed in Section 3.6. The provisions taken to protect the system from missiles are discussed in Section 3.5. The provisions to protect the system from seismic damage are discussed in Sections 3.7, 3.9, and 3.10. Thermal stresses on the reactor coolant system are discussed in Section 5.2.

6.3.2.13 Provisions for Performance Testing

The provisions incorporated to facilitate performance testing of components are discussed in Section 6.3.4.

6.3.2.14 Net Positive Suction Head

The ECCS is designed so that adequate net positive suction head is provided to system pumps. Adequate net positive suction head is shown to be available for all pumps as follows:

(1) Residual Heat Removal Pumps

The net positive suction head of the RHR pumps is evaluated for normal plant shutdown operation, and for both the injection and recirculation modes of operation for the design basis accident. Recirculation operation gives the limiting net positive suction head requirement, and the net positive suction head available is determined from the containment pressure, vapor pressure of liquid in the sump, containment sump level relative to the pump elevation and the pressure drop in the suction piping from the sump to the pumps. No credit is taken for water level above the lower containment floor elevation, and no credit is taken for containment over pressure. The net positive suction head evaluation is based on all pumps operating at the maximum design basis accident flow rates. The RHR pump head-capacity curves are given in Figure 6.3-2.

(2) Safety Injection and Centrifugal Charging Pumps

The net positive suction head for the safety injection pumps and the centrifugal charging pumps is evaluated for both the injection and recirculation modes of operation for the design basis accident. The end of the injection mode of operation gives the limiting net positive suction head available. The net positive suction head available is determined from the elevation head and vapor pressure of the water in the RWST, which is at atmospheric pressure, and the pressure drop in the suction piping from the tank to the pumps. No credit is taken for RWST water level above the floor plate. At the end of the injection mode when suction from the RWST is terminated, adequate net positive suction head is supplied from the containment sump by the booster action of the low head pumps. The net positive suction head evaluation is based on all pumps operating at the maximum design flow rates. The head-capacity curve for the safety injection pumps is given in Figure 6.3-3. The head-capacity curve for the charging pumps is given in Figure 6.3-4.
Available NPSH parameters are given in Table 9.2-3.

6.3.2.15 Control of Motor-Operated Isolation Valves

The cold leg accumulator (CLA) valves are opened and their power removed prior to RCS pressure exceeding 1000 psig. This action assures that the CLAs are available for all plant operating conditions in which passive CLA discharge is required for accident mitigation. Power is removed by opening a shunt trip breaker, allowing the control circuit and indication to remain functional. The interlock for the CLA

accumulator discharge valves to open upon receipt of the safety injection or P-11 signal remains from the original design, but this control function is obviated by removal of power and is no longer required for the accumulators to perform their safety function. A main control room alarm is actuated if any of the CLA valves are not fully open and the RCS pressure is above the P-11 permissive setpointA further discussion of these valves is given in Section 6.3.5.5.

6.3.2.16 Motor-Operated Valves and Controls

Certain remotely operated valves for the injection mode which are under manual control (i.e., critical valves normally in the ready position not requiring an SIS signal) have an audible alarm which is sounded in the main control room if a valve is not in the ready position for injection.

6.3.2.17 Manual Actions

No manual actions are required during the injection phase. The only actions required by the operator for proper ECCS operation following injection are those required to realign the system for cold leg recirculation and, approximately 3 hours after event initiation, its hot leg recirculation mode of operation.

6.3.2.18 Process Instrumentation

Process instrumentation available to the operator in the control room to assist in assessing post LOCA conditions are tabulated in Section 7.5.

6.3.2.19 Materials

Materials employed for components of the ECCS are given in Table 6.3-2. These materials are chosen based upon their ability to resist radiolytic and pyrolytic decomposition (see Section 6.3.2.4). Coatings specified for use on the ECCS components (mainly, the cold leg accumulators) are listed in Section 6.1.2.

6.3.3 Performance Evaluation

6.3.3.1 Evaluation Model

The analyses reflected in Section 15.4 were performed to ensure that the limits on core behavior following various pipe ruptures, etc., are met by the ECCS operating with minimum design equipment:The flow delivered to the RCS by the ECCS as a function of reactor coolant pressure with the operation of minimum design equipment is analyzed in Section 15.4.

The design basis performance characteristic is derived from the specified performance characteristic for each pump with a conservative estimate of system piping resistance, based upon piping layout.

The performance characteristic utilized in the accident analyses includes a 5 percent decrease in the design head for margin. When the initiating incident is assumed to be the severance of an injection line the injection curve utilized in the analysis accounts for the loss of injection water through the broken line.

6.3.3.2 ECCS Performance

The large pipe break analysis is used to evaluate the initial core thermal transient for a spectrum of pipe ruptures up to the double-ended rupture of the largest pipe in the RCS. (See Section 15.4.1 for size).

The injection flow from active components is required to control the cladding temperature subsequent to accumulator injection, complete reactor vessel refill, and will eventually return the core to a subcooled state. The results of the large break analysis indicate that the maximum cladding temperature attained at any point in the core is such that the limits on core behavior as specified in Section 15.4 are met.

6.3.3.3 Alternate Analysis Methods

Small Pipe Break

The small pipe break analysis is used to evaluate the initial core thermal transient for a spectrum of pipe rupture from 3/8-inch up to and including the ruptures defined in Section 15.3. For breaks 3/8-inch or smaller, the charging system can maintain the pressurizer level at the RCS operating pressure and the ECCS would not be actuated.

The results of the small pipe break analysis indicate that the limits on core behavior are adequately met, as shown in Section 15.3.

Main Steam System Single Active Failure

Analyses of reactor behavior following any single active failure in the main steam system which results in an uncontrolled release of steam are included in Section 15.2. The analyses assume that a single valve (largest of the safety, relief, or bypass valves) opens and fails to close, which results in an uncontrolled cooldown of the RCS.The ECCS provides adequate protection for this incident.

Steam Line Rupture

Following a steamline rupture, the ECCS is automatically actuated to deliver borated water from the RWST to the RCS. The response of the ECCS following a steam line break is identical to its response during the injection mode of operation following a LOCA.

This accident is discussed in detail in Section 15.4. The limiting steam line rupture is a complete line severance.

In the case of a steam line rupture when offsite power is not assumed lost, credit is taken for the uninterrupted availability of power for the ECCS components.

The results of the analysis in Section 15.4 indicate that the design basis criteria are met. Thus, the ECCS adequately fulfills its shutdown reactivity addition function.

The safety injection actuation signal initiates identical actions as described for the injection mode of the loss-of-coolant accident, even though not all of these actions are

required following a steam line rupture; e.g., the RHR pumps are not required since the reactor coolant system pressure will remain above their shutoff head.

The delivery of the borated water from the charging pump results in a negative reactivity change to counteract the increase in reactivity caused by the system cooldown. The charging pumps continue to deliver borated water from the RWST, until enough water has been added to the RCS to make up for the shrinkage due to cooldown. The safety injection pumps also deliver borated water from the RWST for the interval when the RCS pressure is less than the shutoff head of the safety injection pumps. After pressurizer water level has been restored, the operator will verify that the criteria for "Safety Injection Termination" as defined in the Emergency Instructions are satisfied before manually terminating injection flow.

The sequence of events following a postulated steam line break is described in Section 15.4.

6.3.3.4 Fuel Rod Perforations

Discussions of peak clad temperature and metal-water reactions appear in Sections 15.3.1 and 15.4.1. Analyses of the radiological consequences of RCS pipe ruptures also are presented in Section 15.5.3.

6.3.3.5 Effects of ECCS Operation on the Core

The effects of the ECCS on the reactor core are discussed in Sections 15.3 and 15.4.

6.3.3.6 Use of Dual Function Components

The ECCS contains components which have no other operating function as well as components which are shared with other systems and perform normal operating functions. Components in each category are as follows:

(1) Components of the ECCS which perform no other functions are:

(a) One accumulator for each loop which discharges borated water into its respective cold leg of the reactor coolant loop piping.

(b) Two safety injection pumps which supply borated water for core cooling to the reactor coolant system and makeup to the accumulators.

(c) Associated piping, valves, and instrumentation.

(2) Components which also have a normal operating function are as follows:

(a) The RHR pumps and the residual heat exchangers: These components are normally used during reactor cooldown and heatup and when the reactor is at cold shutdown or refueling for core decay

heat removal. However, during all other plant operating periods, they are aligned to perform the low head injection function.

(b) The centrifugal charging pumps: These pumps are normally aligned for charging service. As a part of the chemical and volume control system, the normal operation of these pumps is discussed in Section 9.3.4.

(c) The RWST: This tank is used to fill the refueling canal for refueling operations. However, during all other plant operating periods it is aligned to the suction of the safety injection pumps and the RHR pumps. The charging pumps are aligned to the suction of the RWST upon receipt of a safety injection signal.

An evaluation of all components required for operation of the ECCS demonstrated that either:

(1) The component is not shared with other systems, or

(2) If the component is shared with other systems, it is aligned during normal plant operation to perform its accident function; if not aligned to its accident function, two valves in parallel are provided to align the system for injection, and two valves in series are provided to isolate portions of the system not utilized for injection. These valves are automatically actuated by a safety injection signal, except in the case of the two isolation valves in series on the hydrogen vent line for the charging pumps suction-side piping. These vent valves are actuated by closing the valves in the charging pump normal suction line from the volume control tank, which is initiated by a safety injection signal.

Table 6.3-5 indicates the alignment of components during normal operation, and the realignment required to perform the accident function.

Dependence on Other Systems

Other systems which operate in conjunction with the ECCS are as follows:

(1) The component cooling system cools the residual heat exchangers during the recirculation mode of operation. It also supplies cooling water to the charging pumps, the safety injection pumps, and the RHR pumps during the injection and recirculation modes of operation.

(2) The essential raw water system provides cooling water to the component cooling heat exchangers and the ESF equipment room coolers.

(3) The electrical systems provide normal and emergency power sources for the ECCS.

(4) The engineered safety features actuation system generates the initiation signal for emergency core cooling.

(5) The auxiliary feedwater system supplies feedwater to the steam generators.

Limiting Conditions for Maintenance During Operation

See the Technical Specifications 3.0 for the details concerning the limiting conditions for maintenance during operations.

6.3.3.7 Lag Times

The minimum active components will be capable of delivering full rated flow within a specified time interval after process parameters reach the setpoints for the safety injection signal. Response of the system is automatic, with appropriate allowances for delays in actuation of circuitry and active components. The active portions of the system are actuated by the safety injection signal directly, with the exception of the isolation valves for the hydrogen vent lines on the charging pump suction piping. These valves are electrically interlocked to the volume control tank outlet valves. In analyses of system performance, delays in reaching the programmed trip points and in actuation of components are established on the basis that only emergency onsite power is available. A further discussion of the starting sequence is given in Section 8.3.1.

In the LOCA analysis presented in Sections 15.3 and 15.4 no credit is assumed for partial flow prior to the establishment of full flow and no credit is assumed for the availability of offsite power sources.

For smaller LOCA, there are some additional delays before the process variables reach their respective programmed trip setpoints since this is a function of the severity imposed by the accident. Allowances are made for this in the analyses of the spectrum of reactor coolant pipe breaks.

6.3.3.8 Thermal Shock Considerations

Thermal shock considerations are discussed in Section 5.2.

6.3.3.9 Limits on System Parameters

A comprehensive qualification program has been undertaken to demonstrate that the ECCS components and associated instrumentation and electrical equipment applicable to ECCS will operate for the time period required in the combined post-loss-of-coolant accident conditions of temperature, pressure, humidity, radiation, and chemistry (See Section 3.11).

The specification of individual parameters as given in Table 6.3-1 includes due consideration of allowances for margins over and above the required performance value (e.g., pump flow and net positive suction head), and the most severe conditions to which the component could be subjected (e.g., pressure, temperature, and flow).

6.3.3.10 Use of RHR Spray

No earlier than one hour after initiation of the LOCA, the low head RHR flow may be diverted from the core low head injection path to the RHR spray headers. For minimum

safeguards, one high head safety injection pump and one centrifugal charging pump would supply the coolant to the core after realignment of a portion of the RHR pump discharge to the RHR spray headers. The amount of water which would be supplied to the core at a RCS pressure of 15 psig (which is the peak containment design pressure) is approximately 105 lbm/sec. At one hour after a hypothetical LOCA the core has been quenched so that effluent carryover has been terminated. The time that effluent carryover or entrainment from the core ends is conservatively assumed to occur when the core mixture height reaches the 10 foot elevation (at approximately 150 seconds). At one hour, the thin and thick metal sensible heat has been removed and temperatures reduced to the saturation temperature for the containment pressure. The only heat generation at this time is decay heat.

The decay heat mass boiloff at one hour, which is the minimum time that the RHR low head flow can be diverted to the RHR spray, is 61.5 lbm/sec based on the following assumptions:

(1) 102% of engineered safeguards design power rating of 3579 Mwt.

(2) ANS infinite decay heat with 20% margin (10 CFR 50.46 Appendix K). Refer to Table 6.3-11.

(3) Coolant entering the core is subcooled by 60 Btu/lbm.

Therefore, the coolant entering the RCS piping is roughly twice that required by conservative calculation of the decay heat mass boiloff.

It should be noted that the minimum time given above for diversion of RHR low head flow to the containment spray system is consistent with the containment pressure analysis presented in Section 6.2.1.

6.3.4 Tests and Inspections

In order to demonstrate the readiness and operability of the ECCS, the components are subjected to periodic tests and inspections. Performance tests of the components were performed in the manufacturer's shop prior to delivery. A comprehensive preoperational test program on the ECCS and its components were performed prior to initial fuel loading to provide assurance that the ECCS will accomplish its intended function when required.

6.3.4.1 Preoperational Tests *(Historical Information - Not Updated)*

Preoperational testing of each system and component of the emergency core cooling system is to be performed in compliance with the requirements of Regulatory Guide 1.79, "Preoperational Testing of Emergency Core Cooling Systems for Pressurized Water Reactors," with the exception of the following nonconformance items.

Section	Description per Reg. Guide 1.79	Comments
C-1-b-(2)	"The testing should include taking suction from the sump to verify vortex control and acceptable pressure drops across screening and suction lines and valves."	Scale model testing has been performed to verify vortex control and demonstrate insignificant reduction of pump NPSH due to screen and trashrack pressure drops. Calculations have been performed to verify acceptable pressure drops across suction lines and valves. A flowpath from the sump will be verified by water blasting during flushing operations.

The preoperational test of the ECCS and components is discussed in more detail in Chapter 14.

6.3.4.2 Component Testing

Routine periodic testing of the ECCS components and necessary support systems is detailed in Technical Specifications as clarified below. Valves, which operate after a loss-of-coolant accident, are operated through a complete cycle where practical, and pumps are operated individually in this test on their mini-flow lines. If such testing indicates a need for corrective maintenance, the redundancy of equipment in these systems permits such maintenance to be performed without shutting down or reducing load under certain conditions. These conditions include considerations such as the period within which the component should be restored to service and the capability of the remaining equipment to provide the minimum required level of performance during such a period. The inservice component tests of ECCS pumps and valves conform, to the extent practicable allowed by plant design, to the guidelines of the 2001 Edition of the ASME OM Code with Adddenda through 2003 for inservice testing of pumps and valves. Performance testing of the Auxiliary Building ECCS pump room coolers is conducted in accordance with TVA's Generic Letter 89-13 commitments.

6.3.4.3 Periodic System Testing

System testing can be conducted during plant shutdown to demonstrate proper automatic operation of the ECCS. The test programdemonstrates the operation of the diesel generator loading sequence, the valves, pumps, and automatic circuitry. The accumulator isolation valve motors are deenergized and the centrifugal charging and safety injection pumps are maintained in recirculation flow for this test so that flow is not introduced into the RCS. The breakers supplying power to the safeguards busses are then tripped manually to simulate a loss of offsite power. Load shedding and diesel generator start signals are verified. A test emergency core-cooling signal is then applied to initiate diesel start and diesel loading. The pump and valve responses are then verified. The ability of the diesel generators to reject 600 kW without tripping is then tested. After the blackout signals are reset, plant configuration is restored in accordance with established procedures.

The test is considered satisfactory if control board indication and visual observation indicate all components have operated and sequenced properly. Periodic ECCS

testing is detailed in Technical Specifications. The inservice inspection program described in Sections 5.2.8 and 6.6 provides further confirmation that no significant deterioration is occurring in the emergency core cooling system fluid boundary.

6.3.5 Instrumentation Application

Instrumentation and associated process protection and logic channels employed for initiation of ECCS operation is discussed in Section 7.3. This section describes the instrumentation employed for monitoring emergency core cooling system components during normal plant operation and post-accident operation.

6.3.5.1 Temperature Indication

Residual Heat Exchanger Temperature

The fluid temperature at the inlet and outlet of each residual heat exchanger is recorded in the main control room.

Refueling Water Storage Tank (RWST) Temperature

Two temperature channels are provided to monitor the RWST temperature. Both are indicated in the main control room.

6.3.5.2 Pressure Indication

Safety Injection Header Pressure

Safety injection pump discharge header pressure is indicated in the control room.

Cold Leg Accumulator Pressure

Duplicate pressure channels are installed on each cold leg accumulator. Pressure indication in the control room and a common high and low pressure alarms are provided by each channel. An additional channel for each accumulator provides pressure indication and high pressure alarm in the auxiliary control room.

Test Line Pressure

A local pressure indicator used to check for proper seating of the accumulator check valves between the injection lines and the RCS is installed on the leakage test line.

Residual Heat Removal Pump Discharge Pressure

Residual heat removal discharge pressure for each pump is indicated in the main control room. A common high pressure main control room alarm is actuated by each channel.

6.3.5.3 Flow Indication

Charging Pump Injection Flow

Injection header flow to the reactor cold legs is indicated in the main control room.

Residual Heat Removal Pump Flow

Flow through the RHR injection header and recirculation header is indicated in the main control room.

Test Line Flow

Local indication of the leakage test line flow is provided to check for proper seating of the accumulator check valves between the injection lines and the RCS.

Residual Heat Removal Pump Minimum Flow

A local flowmeter installed in each RHR pump discharge header provides control for the valve located in the pump minimum flow line.

Loss of RHR Flow

An alarm is provided in the main control room to detect low RHR flow. The alarm will detect a miniflow condition coincident with the RHR pump running.

Safety Injection Pump Flow

Injection header flow to the reactor hot and cold legs is indicated in the main control room.

6.3.5.4 Level Indication

Refueling Water Storage Tank Level

Four water level channels which indicate and alarm RWST level in the main control room are provided. The low level setpoint is used in the automatic switchover (sequence described in Table 6.3-3) in a 2/4 logic. Each channel inputs to a common alarm on low and low-low water levels and is indicated on the main control board. Two additional water level channels monitor the upper tank level and provide indication and alarms in the main control room. These high and low alarms are used to ensure adequate RWST inventory and preclude overfilling.

Cold Leg Accumulator Level

Two water level channels are provided for each tank which indicate and alarm the water level in the main control room. The common low and high level alarms ensure adequate accumulator water level.

Containment Sump Water Level

Four containment sump water level indicator channels provide the control room with water level indication and also provide a permissive signal (2 out of 4 logic) to initiate the auto-switchover from the injection to recirculation mode. A common main control room alarm is used to identify a high containment water level condition.

6.3.5.5 Valve Position Indication

The majority of the engineered safety features remote-operated valves have red and green lights on the control board to indicate valve position. The exceptions to this are discussed in Section 7.3.

Accumulator Isolation Valve Position Indication

The accumulator isolation valves are provided with red (open) and green (closed) position indication lights located on the main control room hand switch for each valve. These lights are powered by valve control power and actuated by valve motor operator limit switches.

Refueling Water Storage Tank Isolation Valve

The RWST isolation valve is provided with red (open) and green (closed) position indication lights located on the main control room hand switch. These lights are powered by valve control power and actuated by valve motor operator limit switch.

References

None

Table 6.3-1 Emergency Core Cooling System Component Parameters (Page 1 of 4)

Component	Parameters	
Cold Leg Injection Accumulators	Number	4
	Design Pressure, psig	700
	Design Temperature, °F	300
	Operating Temperature, °F	60-150
	Minimum Safety Analysis Limit Pressure, psig	585
	Nominal Total Volume, ft^3	1356 each
	Nominal Water Volume, ft^3	1050 each
	Nominal Volume N_2 Gas, ft^3	306
	Boric Acid Concentration nominal, ppm minimum, ppm Maximum	 3150 3000 3300
	Hi-level Alarm, ft^3	1165
	Relief Valve Setpoint, psig	700
Centrifugal Charging Pumps	Number	2
	Design Pressure, psig	2800
	Design Temperature, °F	300
	**Design Flow Rate, gpm (original design point)	150
	Design Head, ft (original design point)	5800
	Max. Flow Rate, gpm (inj. mode/recirc. mode)	550/560
	Head Required at Max. Flow Rate, ft (injection mode)	1342
	NPSH Required at Max. Flow Rate, ft (injection mode)	25
	Motor Rating, hp (original/upgraded)	600/720****
	Maximum Starting Time, sec	5

Table 6.3-1 Emergency Core Cooling System Component Parameters (Continued) (Page 2 of 4)

Component	Parameters	
Safety Injection Pumps	Number	2
	Design Pressure, psig	1750
	Design Temperature, °F	300
	Design Flow Rate, gpm (original design point)	400
	Design Head, ft (original design point)	2700
	Max. Flow Rate, gpm (inj. mode/recirc. mode)	650/675
	Head Required at Max. Flow Rate, ft (injection mode)	1808
	NPSH Required at Max. Flow Rate, ft (injection mode)	30 (Train A) 28 (Train B)
	***Motor Rating, hp	400
	Maximum Starting Time, sec	5
Residual Heat Removal Pumps	Refer to Section 5.5.7 for parameter information	
Residual Heat Exchangers	Refer to Section 5.5.7 for parameter information	
Boron Injection Tank	Number	1
	Total Volume, gal	900
	Useable Volume at Operating Conditions, gal	900
	Design Pressure, psig	2735
	Design Temperature, °F	300
Refueling Water Storage Tanks	Number Total Volume, gal Volume at Overflow, gal Minimum Volume, gal Normal Pressure, psig Design Pressure, psig Design Temperature, °F Boron Concentrations (as boric acid), ppm	1 400,000 380,000 370,000 Atmospheric Atmospheric 200 3200 nominal 3100 minimum 3300 maximum

Table 6.3-1 Emergency Core Cooling System Component Parameters (Continued) (Page 3 of 4)

Component	Parameters	
Valves		
Valve Number	Valve Description	Maximum Stroke Time
FCV-63-25, -26	BIT Outlet	12 sec
FCV-63-152, -153	SIPs CL Injection Crosstie	12 sec
LCV-62-132, -133	VCT Outlet Isolation to CCPs	10 sec
LCV-62-135, -136	RWST to CCPs Suction	15 sec
FCV-62-90, -91	Charging Line Isolation	10 sec
FCV-63-5	RWST to SIPs Suction	14 sec
FCV-63-47, -48	SIP Suction	15 sec
FCV-63-3, -4, -175	SIP Miniflow Isol	10 sec
FCV-63-156, -157	SIP HL Injection Isol	17 sec
FCV-63-1 FCV-74-3 FCV-74-21	RWST to RHRPs Suction RWST to RHRPs Suction RWST to RHRPs Suction	20 sec 17.1 sec 17.1 sec
FCV-74-33, -35	RHR Discharge Header Crosstie	15 sec
FCV-63-8, -11	RHR HXs to SIPs and CCPs Suctions	28 sec
FCV-63-93, -94	RHRP CL Injection	10 sec
FCV-63-172	RHRP HL Injection	120 sec
FCV-63-72, -73	Cntmt Sump to RHRPs	60 sec
FCV-63-23, -71, -84, -64	SIS Test Valves and N_2 Supply Valves	10 sec
FCV-63-6, -7	SIPs to CCPs Suctions	10 sec
FCV-63-185	Leak Test Line Isolation	10 sec
Valve Design-Basis Leakage		

Table 6.3-1 Emergency Core Cooling System Component Parameters (Continued)
(Page 4 of 4)

Component	Parameters
Leakage by Valve Type	Leakage Allowed
a.Conventional Globe Valves	
disc leakage per inch of nominal valve size	3 cc/hr
back seat leakage per inch of stem diameter	1 cc/hr
b. Gate Valves	
disc leakage per inch of nominal valve size	3 cc/hr
back seat leakage per inch of stem diameter	1 cc/hr
c. Check Valves	
disc leakage per inch of nominal valve size	3 cc/hr
d. Diaphragm Valves	
disk leakage	0 cc/hr
e. Pressure Relief Valves	
disc leakage, maximum	10 cc/hr
f. Accumulator Check Valves	
disc leakage per inch of nominal valve size	3 cc/hr

* FCV-63-22, FCV-62-98, and FCV-62-99 are not listed since they are considered passive valves.

** Includes miniflow.

*** Service factor of 1.15 not included.

**** Actual bhp requirements are based on installed pump rotating element consistent with analysis.

Table 6.3-2 Materials Employed For Emergency Core Cooling System Components (Page 1 of 2)

Component	Material
Cold Leg Accumulators	Carbon Steel, Clad with Austenitic Stainless Steel
Boron Injection Tank	Austenitic Stainless Steel
Pumps	
Safety Injection	Austenitic Stainless Steel
Centrifugal Charging	Austenitic Stainless Steel
Residual Heat Removal	Austenitic Stainless Steel
Residual Heat Exchangers	
Shell	Carbon Steel
Shell End Cap	Carbon Steel
Tubes	Austenitic Stainless Steel
Channel	Austenitic Stainless Steel
Channel Cover	Austenitic Stainless Steel
Tube Sheet	Austenitic Stainless Steel
Valves	
Motor-Operated Valves Containing Radioactive Fluids:	
Pressure Containing Parts	Austenitic Stainless Steel or Equivalent
Body-to-Bonnet Bolting and Nuts	High Alloy Steel
Seating Surfaces	Stellite No. 6 or Equivalent
Stems	Austenitic Stainless Steel or 17-4 PH Stainless
Diaphragm Valves	Austenitic Stainless Steel
Accumulator Check Valves	
Parts Contacting Borated Water	Austenitic Stainless Steel
Clapper Arm Shaft Pin	Nickel Alloy
Relief Valves	
Bodies	Stainless Steel

Table 6.3-2 Materials Employed For Emergency Core Cooling System Components (Continued) (Page 2 of 2)

Component	Material
All Nozzles, Discs and Guides, and Spindles	Austenitic Stainless Steel, Nickel Alloy, and Stellite high alloy steel
Bonnets for Stainless Steel Valves without a Balancing Bellows	Stainless Steel
All Other Bonnets	Carbon Steel
Piping	
All Piping in Contact with Borated Water	Austenitic Stainless Steel
Refueling Water Storage Tank	Austenitic Stainless Steel

Table 6.3-3 Sequence Of Change-Over Operation, Injection To Recirculation (Page 1 of 2)

The following automatic phase of switchover from the injection to the recirculation mode is initiated when the RWST is at low level and the containment sump level has risen to its level switch actuation point. (Westinghouse flow diagram valve numbers are shown in brackets.) The component cooling water isolation valve to each RHR heat exchanger (FCV 70-153, -156) is opened during this switchover or immediately thereafter.

1. The valves that admit suction from the containment sump to the RHR pumps (FCV 63-72 & 73) open while the RHR pumps continue to run. [8811A and B]
2. The valves that were open and permitting suction for the RHR pumps to be taken from the RWST (FCV 74-3 & -21) start to close when the valves in Step 1 start to open. [8700A and B]

The manual operations below are accomplished following the automatic switchover phase.

1. Verify completion of the automatic valve realignments above. If an RHR pump has failed to switchover to the sump, stop that pump.
2. Verify SIP flow to the RCS (e.g., large break case) and close the three safety injection pump miniflow valves (FCV 63-3, -4, -175). [8811, 8920, 8813]
3. Close the two valves in the crossover line downstream of the RHR heat exchangers (FCV 74-33, -35). [8716A and B]
4. Open the two parallel valves in the common suction line between the charging pump suction and the safety injection pump suction (FCV 63-6, -7). [8807A and B] Ensure FCV-63-177 is open [8924].
5. Open the valve in the line from the train A RHR pump discharge to the charging pump suction (FCV 63-8) and the valve in the line from the train B RHR pump discharge to the safety injection pump suction (FCV 63-11). [8804A and B]
6. Reset the SIS actuation signal and close the two parallel valves in the line from the RWST to the charging pump suction (FCV 62-135, -136). [LCV-112D and E] Place corresponding valve handswitches in A-Auto.
7. Close the valve in the line from the RWST to the safety injection pump suction (FCV 63-5). [8806]
8. Restore power and close the valve in the common line from the RWST to both RHR pumps (FCV 63-1). [8812]

Upon reaching the RWST low-low level setpoint, as indicated on the qualified PAM indicator channels, the operator shall realign the containment spray system. The following steps are required for the realignment of the containment spray system from the injection to the recirculation mode.

First, reset containment spray actuation signal.

1. Stop both containment spray pumps ("pull to lock in stop" to preclude the possibility of pump restart while realigning suction valves).
2. Close the spray pump/RWST isolation valve at the suction of each containment spray pump (FCV 72-22 and -21). [9017A and B]
3. Open the essential raw cooling water isolation valves to each containment spray heat exchanger (FCV 67-125, -126, -123, -124).

Table 6.3-3 Sequence Of Change-Over Operation, Injection To Recirculation (Continued) (Page 2 of 2)

4. Open the sump isolation valve at the suction of each containment spray pump (FCV 72-44 and -45) after the valves in Step 2 have completed their travel. [9020A and B]
5. Verify that the valve realignments in Steps 2 through 4 have been completed.
6. Restart both containment spray pumps, if containment pressure is greater than or equal to 2.0 psig.

If the ECCS and the containment spray system are both operating in the recirculation mode and at least one hour has elapsed since the initiation of the LOCA, a portion of the RHR flow may be diverted to the RHR spray headers for additional containment cooling. (Only one RHR train is used for RHR spray.)

To align No. 1 RHR pump to spray (complete Steps 1 and 2).

1. Close the valve between the No. 1 RHR pump discharge and two RCS cold legs (FCV 63-93).
2. Open the valve between the discharge of the No. 1 RHR pump and the No. 1 RHR spray header (FCV-72-40).

Note: The valve between the discharge of the No. 1 RHR pump and the No. 1 RHR spray header is interlocked such that it cannot be opened unless the containment sump valve to the No. 1 RHR pump is open.

To align No. 2 RHR pump to spray (complete Steps 3 and 4).

3. Close the valve between the No. 2 RHR pump discharge and two RCS cold legs (FCV-63-94).
4. Open the valve between the discharge of the No. 2 RHR pump and the No. 2 RHR spray header (FCV-72-41).

Note: The valve between the discharge of the No. 2 RHR pump and the No. 2 RHR spray header is interlocked such that it cannot be opened unless the containment sump valve to the No. 2 RHR pump is open.

The following switching operation should be used approximately 3 hours after event initiation when realigning the ECCS from the cold leg recirculation mode to the hot leg recirculation mode. In the event a train cannot be aligned in the hot leg recirculation mode, it will be realigned to the cold leg recirculation.

5. Stop the safety injection pumps.
6. Close the safety injection pumps discharge crossover valves (FCV 63-152 and -153). [8821A and B]
7. Open the safety injection pump hot leg injection valves (FCV 63-156 and -157). [8802A and B]
8. Start the safety injection pumps.
9. If available, close the safety injection pump cold leg injection valve (FCV 63-22). [8835]

If RHR hot leg injection is desired:

1. Close train A or B cold leg injection valve (FCV 63-93 or -94). [8809A, 8809B]
2. Open the RHR crossover valve (FCV 74-33 or -35). [8716B, 8716A]
3. Open the RHR hot leg injection valve (FCV 63-172). [8840]
4. Close the other train RHR pump cold leg injection valve (FCV-63-94 or -93). [8809B, 8809A]

Table 6.3-3a EVALUATION OF TIME SEQUENCE ASSOCIATED WITH CHANGEOVER OPERATION FROM INJECTION TO RECIRCULATION

1) Minimum time to switchover initiation	10 minutes (measured from time of ESFAS Actuation due to LOCA)
2) Automatic switchover completed	1 minute*
3) Stop RHR pump if it fails to switch over	1.5 minutes*
4) Complete manual switchover to the point where FCV-63-8/-11 are open	5.5 minutes*
5) Stop CS pump after receipt of low-low level in RWST	10 seconds

* Time measured from initiation of auto switchover.

Table 6.3-4 NORMAL OPERATING STATUS OF EMERGENCY CORE COOLING SYSTEM COMPONENTS FOR CORE COOLING

Number of Safety Injection Pumps Operable	2
Number of Charging Pumps Operable	2
Number of Residual Heat Removal Pumps Operable	2
Number of Residual Heat Exchangers Operable	2
Refueling Water Storage Tank Volume, gal (minimum)	370,000
Boron Concentration in Refueling Water Storage Tanks, minimum ppm	3,100
Boron Concentration in Cold Leg Accumulator, minimum ppm	3,000
Number of Accumulators	4
Minimum Cold Leg Accumulator Pressure, psig (Safety Analysis)	585
Maximum Cold Leg Accumulator Pressure, psig (Safety Analysis)	690
Nominal Cold Leg Accumulator Water Volume, ft^3	1,050
System Valves, Interlocks, and Piping Required for the Above Components which are Operable	All

Table 6.3-5 EMERGENCY CORE COOLING SYSTEM SHARED FUNCTIONS EVALUATION

Component	Normal Operating Arrangement	Accident
Refueling Water Storage Tank	Lined up to suction of safety injection, containment spray, and residual heat removal pumps.	Lined up to suction of centrifugal charging, safety injection, residual heat removal pumps, and containment spray pumps. Valves for realignment meet single failure criteria.
Centrifugal Charging Pumps	Lined up for charging service Suction from volume control tanks	Lined up to inlet of boron injection tank and outlet of RWST. Valves for realignment meet single failure criteria.
Residual Heat Removal Pumps	Lined up to cold legs of reactor coolant piping.	Lined up to cold legs of reactor coolant piping.
Residual Heat Exchangers	Lined up for residual heat removal pump operation.	Lined up for residual heat removal pump operations.
Safety Injection Pumps	Lined up to cold legs of reactor coolant piping.	Lined up to cold legs of reactor coolant piping.
Accumulators	Lined up to cold legs of reactor coolant piping	Lined up to cold legs of reactor coolant piping.

Table 6.3-6 Maximum Recirculation Loop Leakage External To Containment

Item	Type of Leakage Control and Unit Leakage Rate Used in the Analysis	Leakage to Atmosphere cc/hr	Leakage to Drain Tank cc/hr
1.Residual Heat Removal Pumps (Low Head Safety Injection)	Mechanical seal	*	0
2.Safety Injection Pumps	Same as residual heat removal pump	*	0
3.Charging Pumps	Same as residual heat removal pump	*	0
4.Flanges:			
a.Pumps	Gasket - adjusted to zero leakage following any test 10 drops/min/gauge used (30cc/hr). Due to leak tight flanges on pumps, no leakage is assumed to atmosphere.	0	0
b.Valves (larger than 2 inches)		2,400	0
c.Control Valves		480	0
d.Heat Exchangers		240	0
*Infrequent minor ECCS pump seal leakage that may occure during normal operation is bounded by the existing offsite dose analysis. The total realistic ECCS recirculation loop leakage from all flanged connections and valves is 94 cc/hr, whereas the total ECCS recirculation loop leakage eveluated in the offsite dose analysis is 3760 cc/hr.			
WBNP-0			
5.Valves - Stem Leakoffs	Back seated double packing with leakoff - 1 cc/hr/in stem diameter used (see Table 6.3-1).	0	50
6.Miscellaneous Small Valves	Flanged Boyd packed stems - 1 drop/min used (3cc/hr).	600	0
7.Miscellaneous Large Valves (Larger than 2 inches)	Double packing 1cc/hr/in stem diameter used.	40	0

Table 6.3-7 DELETED BY AMENDMENT 85

Table 6.3-8 Failure Modes And Effects Analysis For Active Failures For The Safety Injection System (Page 1 of 70)

Item No.	Component	Function	Failure Mode	Potential Cause	Method of Detection	Effect on System	Effect on Plant	Remarks
1	LCV-62-135 Train A	Opens to connect RWST to CCPs' suction (parallel to LCV-62-136) (injection mode)	Fails to open, stuck closed or spurious closing after opening	Mechanical failure; Train A power failure; Train A SI Signal failure; operator error (HS in wrong position)	Ind. light in MCR; HS position	No redundancy in RWST suction path to CCPs	None. Train B RWST suction valve LCV-62-136 allows suction flow to both CCPs	Normally closed valve opens automatically on SI Signal to align CCP suction to RWST and is manually closed along with parallel valve LCV-62-136 for sump recirculation mode after CCP suction is transferred to RHR pump discharge. Automatic operation of 62-135 on SI Signal, is completely independent of valve 62-136. (This valve has a VCT LO-LO level automatic function, which is not within the scope of this SIS FMEA.)
		Closes to isolate RWST (recirc. mode)	Fails to close or stuck open	Mechanical failure; Train A power failure; operator error	Ind. light in MCR; HS position	RWST remains connected to CCPs' suction after switchover to recirculation, however, pump discharge head from RHR is greater than head from RWST and backflow to RWST is prevented by check valve 62-504.	None	
			Spuriously opens	Operator error (HS in wrong position)	Indicating light			

Table 6.3-8 Failure Modes And Effects Analysis For Active Failures For The Safety Injection System (Page 2 of 70)

Item No.	Component	Function	Failure Mode	Potential Cause	Method of Detection	Effect on System	Effect on Plant	Remarks
2	LCV-62-136 Train B	Opens to connect RWST to CCPs' suction (parallel to LCV-62-135) (injection mode)	Fails to open, stuck closed or spurious closing after opening	Mechanical failure; Train B power failure; Train B SI Signal failure	Ind. light in MCR; HS position	No redundancy in RWST suction path to CCPs	None. Train B suction valve LCV-62-136 allows RWST suction flow to both CCPs	Normally closed valve opens automatically on SI Signal to align CCP suction to RWST and is manually closed along with parallel valve LCV-62-135 for sump recirculation mode after CCP suction is transferred to RHR pump discharge. Automatic operation of 62-136, on SI Signal, is completely independent of valve 62-135. (This valve has a VCT LO-LO level automatic function, which is not within the scope of the SIS FMEA.)

Table 6.3-8 Failure Modes And Effects Analysis For Active Failures For The Safety Injection System (Page 3 of 70)

Item No.	Component	Function	Failure Mode	Potential Cause	Method of Detection	Effect on System	Effect on Plant	Remarks
2 (cont'd)	LCV-62-136 Train B	Closes to isolate RWST (Recirc. mode)	Fails to close or stuck open	Mechanical failure; Train B power failure; operator error	Ind. light in MCR; HS position	RWST remains connected to CCPs' suction after switchover to recirculation, however, head from RHR is greater than head from RWST and backflow to RWST is prevented by check valve 62-504.	None	
			Spuriously opens	Operator error (HS in wrong position)	Indicating light			

Table 6.3-8 Failure Modes And Effects Analysis For Active Failures For The Safety Injection System (Page 4 of 70)

Item No.	Component	Function	Failure Mode	Potential Cause	Method of Detection	Effect on System	Effect on Plant	Remarks
3	Check Valve 62-504	Provides suction flow path from RWST to CCPs (injection mode)	Stuck closed (See 'Remarks' Column)	Mechanical failure	Erratic readings on motor ammeter and pump discharge flow (FI-63-170) in control room. Suction pressure indication on PI-62-105 and 109 (local); Discharge pressure indication on PI-62-106 and 110 (local)	Pumps start on SI signal but suction flow not established. Pump damage unless operator secures pumps based on motor amp and flow readings	See 'Remarks' Column	Per IEEE Std. 500-1984, check valves at PWRs have a failure rate (fail to open) of 60 per million demands, which makes this a credible failure mode. Relative to the failure mode, the Design Criteria Document does not require consideration of this check valve as an active component for the opening function (and therefore its failure to open) during the injection mode. However, during the recirculation mode, it is an active component and its failure to close is analyzed below. The effect on the plant, if 'stuck closed' failure mode were to be considered, is no flow from charging pumps and no injection into cold legs until RCS pressure drops below discharge pressure of SI pumps.

Table 6.3-8 Failure Modes And Effects Analysis For Active Failures For The Safety Injection System (Page 5 of 70)

Item No.	Component	Function	Failure Mode	Potential Cause	Method of Detection	Effect on System	Effect on Plant	Remarks
	Check Valve 62-504	Prevents backflow from CCP suction header to RWST (Recirc. mode)	Stuck open or fails to backseat	Mechanical failure	Change in RWST level and temperature; Radcon surveys of RWST area; loss of containment sump inventory	None. MOVs 62-135 and 62-136 are closed to complete switchover to recirc. mode	None.	Per IEEE Std. 500-1984, failure mode is internal leakage rather than gross failure to close

Table 6.3-8 Failure Modes And Effects Analysis For Active Failures For The Safety Injection System (Page 6 of 70)

Item No.	Component	Function	Failure Mode	Potential Cause	Method of Detection	Effect on System	Effect on Plant	Remarks
4	LCV-62-132 Train A	Isolates CCPs' normal suction source (volume control tank) when RWST suction is aligned (in series with LCV-62-133)	Fails to close, stuck open or spurious opening after closing	Mechanical failure, Train A power failure, Train A SI Signal failure; operator error	Ind. light in MCR	Loss of redundancy in VCT isolation	None. Train B isolation valve LCV-62-133 provides isolation of VCT suction path	Both LCV-62-132 and LCV-62-133 are interlocked with LCVs 62-135 and 62-136 in such a way that even on a SI Signal, neither 62-132 nor 62-133 will begin to close unless either 62-135 or 62-136 is fully open. The schematics were reviewed and it was determined that the use of non-divisional power and stem-mounted limit switches for the cross-division interlock did not introduce a common failure mode of LCVs 62-132 and 62-133. Failure to open not listed since it has no impact on safety function of System 63.

Table 6.3-8 Failure Modes And Effects Analysis For Active Failures For The Safety Injection System (Page 7 of 70)

Item No.	Component	Function	Failure Mode	Potential Cause	Method of Detection	Effect on System	Effect on Plant	Remarks
5	LCV-62-133 Train B	Isolates CCPs' normal suction source (VCT) when RWST is aligned (in series with LCV-62-132)	Fails to close, stuck open or spurious opening after closing	Mechanical failure; Train B power failure; Train B SI signal failure; operator error	Ind. light in MCR	Loss of redundancy in VCT isolation	None. Train A isolation valve LCV-62-132 provides isolation of VCT suction source	Both LCV-62-132 and LCV-62-133 are interlocked with LCVs 62-135 and 62-136 in such a way that even on a SI Signal, neither 62-132 nor 62-133 will begin to close unless either 62-135 or 62-136 is fully open. The schematics were reviewed and it was determined that the use of non-divisional power and stem-mounted limit switches for the cross-division interlock did not introduce a common failure mode of LCVs 62-132 and 62-133. Failure to open not listed since it has no impact on safety function of System 63.

Table 6.3-8 Failure Modes And Effects Analysis For Active Failures For The Safety Injection System (Page 8 of 70)

Item No.	Component	Function	Failure Mode	Potential Cause	Method of Detection	Effect on System	Effect on Plant	Remarks
6	Centrifugal Charging Pump A-A	Provides RCP seal injection and emergency core cooling by pumping into RCS cold legs, borated water from RWST during injection mode and contents of containment sump via RHR pumps during recirc. mode.	Fails to start; fails while running	Mechanical failure; Train A power failure; Train A SI Signal failure; motor overload; electrical fault Operator error (HS in wrong position)	Motor trip or overload alarm, indicating lights in main control room, no motor amps, no pump discharge pressure on PI-62-110 (local)	Loss of redundancy in high head injection portion of SI System.	None. CC Pump B-B can provide required high head injection flow for design basis range of break sizes	Pump starts automatically on Train A SI Signal. Automatic operation of each CCP in ECCS injection mode is completely independent of other CCP.
7	Centrifugal Charging Pump B-B	Provides RCP seal injection and emergency core cooling by pumping into RCS cold legs, borated water from RWST during injection mode and contents of containment sump via RHR pumps during recirc. mode.	Fails to start; fails while running	Mechanical failure; Train B power failure, Train B SI Signal failure; motor overload; electrical fault Operator error (HS in wrong position)	Motor trip or overload alarm,indicatin g lights in main control room, no motor amps, no pump discharge pressure on PI-62-106 (local)	Loss of redundancy in high head injection portion of SI System	None. CC Pump A-A can provide required high head injection flow for design basis range of break sizes.	Pump starts automatically on Train B SI Signal. Automatic operation of each CCP in ECCS injection mode is completely independent of other CCP.

Table 6.3-8 Failure Modes And Effects Analysis For Active Failures For The Safety Injection System (Page 9 of 70)

Item No.	Component	Function	Failure Mode	Potential Cause	Method of Detection	Effect on System	Effect on Plant	Remarks
8	Check Valve 62-525	Provides discharge flow path for CCP A-A (injection and recirc modes)	Stuck closed	Mechanical failure	Pump motor amps less than a full load; CCP total flow low as indicated on FI-63-170 in MCR, pump discharge pressure on PI-62-110	Loss of redundancy in high head injection portion of SI System	None. CCP B-B can provide required high pressure injection flow.	
		Prevents reverse flow of CCP B-B discharge through CCP A-A	Stuck open or fails to backseat	Mechanical failure	Pump motor amps above full load, low flow on FI-63-170 in MCR, discharge pressure high on idle pump	See 'Remarks' column	None. See 'Remarks' column	Since the failure of the check valve is the single failure postulated, both CC Pumps A-A & B-B can be assumed to operate.
9	Check Valve 62-532	Provides discharge flow path for CCP B-B (injection and recirc. modes)	Stuck closed	Mechanical failure	Pump motor amps less than full load; CCP total flow low as indicated on FI-63-170 in MCR, pump discharge pressure low on PI-62-106 (local)	Loss of redundancy in high head injection portion of SI System	None. CCP A-A can provide required high pressure injection flow.	

Table 6.3-8 Failure Modes And Effects Analysis For Active Failures For The Safety Injection System (Page 10 of 70)

Item No.	Component	Function	Failure Mode	Potential Cause	Method of Detection	Effect on System	Effect on Plant	Remarks
		Prevents reverse flow of CCP A-A discharge through CCP B-B	Stuck open or fails to backseat	Mechanical failure	Pump motor amps above full load, low flow on FI-63-170 in MCR, discharge pressure high on idle pump	See 'Remarks' column	None. See 'Remarks ' column	Since the failure of the check valve is the single failure postulated, both CC Pumps A-A & B-B can be assumed to operate
10	Check Valve 62-523	Opens to connect CCP A-A discharge to min. flow recirc.	Stuck closed	Mechanical failure	Possible abnormal readings on pump motor ammeter; CCP A-A damage.	Min flow circuit for CCP A-A protection unavailable, with damage to CCP A-A possible.	None. CCP B-B still available	Failure mode is credible; Per IEEE Std. 500-1984, check valves at PWRs have a failure rate (fail to open) of 60 per million demands
		Prevents reverse flow of CCP B-B discharge through CCP A-A	Stuck open or fails to backseat	Mechanical failure	Pump motor amps above full load; discharge press. high on idle pump	See 'Remarks' column	See 'Remarks ' column	Since the failure of the check valve is the single failure postulated, both CC pumps A-A & B-B can be assumed to operate.
11	Check Valve 62-530	Opens to connect CCP B-B discharge min. flow recirc.	Stuck closed	Mechanical failure	Possible abnormal readings on pump motor ammeter; CCP B-B damage	Min. flow circuit for CCP B-B protection unavailable, with damage to CCP B-B possible	None. CCP A-A still available	Failure mode is credible; Per IEEE Std. 500-1984, check valves at PWRs have a failure rate (fail to open) of 60 per million demands

Table 6.3-8 Failure Modes And Effects Analysis For Active Failures For The Safety Injection System (Page 11 of 70)

Item No.	Component	Function	Failure Mode	Potential Cause	Method of Detection	Effect on System	Effect on Plant	Remarks
		Prevents reverse flow of CCP A-A discharge through CCP B-B	Stuck open or fails to backseat	Mechanical failure	Pump motor amps above full load; Discharge press. high on idle pump	See 'Remarks' column	See 'Remarks' column	Since the failure of the check valve is the single failure postulated, both CC pumps A-A & B-B can be assumed to operate.
12	FCV-62-90 Train A	Isolates CCPs' normal charging path from CCP discharge header; in series with FCV-62-91	Fails to close or stuck open	Mechanical failure, Train A power failure, Train A SI Signal failure	Ind. light in MCR	Loss of redundancy in normal charging path isolation	None. Train B isolation valve FCV-62-91 provides isolation of normal charging path.	Failure to open will prevent realignment of charging after SI termination and is not listed since it has no impact on safety function of System 63.
13	FCV-62-91 Train B	Isolates CCPs' normal charging path from CCP discharge header; in series with FCV-62-90	Fails to close or stuck open	Mechanical failure, Train B power failure; Train B SI Signal failure	Ind. light in MCR	Loss of redundancy in normal charging path isolation	None. Train A isolation valve FCV-62-90 provides isolation of normal charging path	Failure to open will prevent realignment of charging after SI termination and is not listed since it has no impact on safety function of System 63.

Table 6.3-8 Failure Modes And Effects Analysis For Active Failures For The Safety Injection System (Page 12 of 70)

Item No.	Component	Function	Failure Mode	Potential Cause	Method of Detection	Effect on System	Effect on Plant	Remarks
14	FCV-63-1 Train A	Provide suction flow path from RWST to RHR pumps A-A & B-B (injection mode)	Spurious closing (not a credible failure mode). See 'Remarks' column	See 'Remarks' column	Alarm and ind. light in MCR	See 'Remarks' column	See 'Remarks' column	Valve is normally open administratively controlled (power off) to avoid or minimize possibility of spurious closing due to operator error. Probability of spurious operation due to hot shorts is reduced by wiring HS & XS contact on both sides of contactors. This failure mode, therefore, is extremely improbable (potential cause). However, if it did occur, RHR pumps will not be available until suction from containment sump can be established. (Effect on system) RHR pumps, if undamaged, can be realigned for recirc. mode (Effect on plant)

Table 6.3-8 Failure Modes And Effects Analysis For Active Failures For The Safety Injection System (Page 13 of 70)

Item No.	Component	Function	Failure Mode	Potential Cause	Method of Detection	Effect on System	Effect on Plant	Remarks
		Closed to prevent backflow from RHR suction to RWST and for isolation of passive failure (recirc. mode)	Stuck open.	Mechanical failure; Train A power failure; operator error	Ind. light in MCR	RHR suction line from RWST pressurized up to RHRP A-A and B-B suction valves 74-3 and 74-21, respectively.	None. Check Valve 63-502 prevents backflow. Additional isolation is provided by FCV's 74-3 and 74-21 which automatically close when RHRP suction valves from sump, FCV-63-72 and FCV-63-73 start opening.	Normal RHR cooldown function not included in SI System FMEA

Table 6.3-8 Failure Modes And Effects Analysis For Active Failures For The Safety Injection System (Page 14 of 70)

Item No.	Component	Function	Failure Mode	Potential Cause	Method of Detection	Effect on System	Effect on Plant	Remarks
15	Check Valve 63-502	Provides suction flow path from RWST to RHRPs (Injection mode)	Stuck closed. See 'Remarks' column.	Mechanical failure	Erratic readings on RHRP motor ammeters and RHRP discharge pressure indicators PI-74-13 and PI-74-26 and flow indicators FI-63-91A/B and FI-63-92A/B in MCR. Local indication of suction pressure (PI-74-4 and PI-74-22) and discharge flow (FIS-74-12 and FIS-74-24) and discharge pressure (PI-74-6 and PI-74-18)	RHR pumps start on SI Signal but suction flow not established. Pump damage unless operator secures pumps based on motor amp and discharge pressure readings	See 'Remarks' column	This is a credible failure mode since, per IEEE Std. 500-1984, check valves at PWR's have a failure rate (fail to open) of 60 per million demands. Relative to the failure mode, the Design Criteria Document does not require consideration of this check valve as an active component for the opening function (and therefore its failure to open) during the injection mode. However, during the recirculation mode, it is an active component and its failure to close is analyzed below. The effect on the plant, if 'Stuck Closed' failure mode were to be considered, is no injection flow from RHR pumps

Table 6.3-8 Failure Modes And Effects Analysis For Active Failures For The Safety Injection System (Page 15 of 70)

Item No.	Component	Function	Failure Mode	Potential Cause	Method of Detection	Effect on System	Effect on Plant	Remarks
		Prevents backflow from SIP suction header to RWST (recirc. mode)	Stuck open or fails to backseat	Mechanical failure	Loss of sump inventory, RWST level/temperature increase, RADCON survey.	None. Closure of FCV-74-3/21 or FCV-63-1 isolates RWST.	None.	Normal RHR cooldown function not included in SIS FMEA. Per IEEE Std. 500-1984, failure mode is internal leakage rather than gross failure to close.
16	FCV-74-3 Train A	Provides flow path to RHRP A-A from RWST (injection mode)	Stuck closed or spuriously closed	Mechanical failure; operator error	Alarm, valve position ind. light in MCR	Loss of redundancy in RHRS position of SI	None. RHRP B-B starts independently and automatically and can provide adequate injection flow.	Normally open valve; closes automatically at switchover to recirc. mode when FCV-63-72 starts to open.
		Isolates RHRP A-A suction from RWST and provides passive failure isolation (recirc. mode)	Fails to close or stuck open No failure assumed if closure is required for isolation of a passive failure.	Mechanical failure; Train A power failure; failure of close signal from FCV-63-72 limit switch	Valve position indication light in MCR	Operator stops RHRP A-A to terminate RWST outflow. Otherwise RWST inventory may be diverted to the sump via FCVs 63-1, 74-3 and 63-72.	None. RHRP B-B aligned automatically to sump, provides adequate recirc. flow.	If RWST and sump become connected, FCV-63-1 can be remote manually closed to isolate RWST (unless failure is due to Train A power failure)

Table 6.3-8 Failure Modes And Effects Analysis For Active Failures For The Safety Injection System (Page 16 of 70)

Item No.	Component	Function	Failure Mode	Potential Cause	Method of Detection	Effect on System	Effect on Plant	Remarks
17	FCV-74-21 Train B	Provides flow path to RHRP B-B from RWST (injection mode)	Stuck closed or spuriously closed	Mechanical failure; operator error	Alarm,valve position ind. light in MCR	Loss of redundancy in RHRS portion of SI	None. RHRP A-A starts independently and automatically and can provide adequate injection flow.	Normally open valve; closes automatically at switchover to recirc. mode when FCV-63-73 starts to open.
		Isolates RHRP B-B suction from RWST and provides passive failure isolation. (recirc. mode)	Fails to close or stuck open No failure assumed if closure required for isolation of a passive failure.	Mechanical failure; Train B power failure; failure of close signal from FCV-63-73 limit switch	Valve position indication light in MCR	Operator stops RHRP B-B to terminate RWST outflow. Otherwise RWST inventory may be diverted to the sump via FCV's 74-21 and 63-73.	None. RHRP A-A aligned automatically to sump, provides adequate recirc. flow.	If RWST and sump become connected, FCV-63-1 can be remote manually closed to isolate RWST.

Table 6.3-8 Failure Modes And Effects Analysis For Active Failures For The Safety Injection System (Page 17 of 70)

Item No.	Component	Function	Failure Mode	Potential Cause	Method of Detection	Effect on System	Effect on Plant	Remarks
18	FCV-63-72 Train A	Provides suction flow path from containment sump to RHRP A-A to initiate recirc. mode of ECCS	Fails to open or stuck closed	Mechanical failure; Train A power failure; Train A SI (latched) signal failure; Train A RWST LVL Lo/CNTMT sump LVL Hi signal failure	Alarm, valve position ind. light in MCR	RHRP A-A suction cannot be switched over from RWST to containment sump. To prevent depletion of RWST, operator may secure RHRP A-A, resulting in loss of redundancy in recirc.	None. RHRP B-B, independently and automatically aligned to sump, can provide adequate recirc. flow	With RHRP A-A secured, the FCV-63-8 suction path to CCPs will be unavailable. Alternate suction path for CCPs can be established by opening Train B valves 63-11 & 63-6 and through normally open valve 63-177. Suction path for both SIP's (B-B directly and A-A through normally open valves 63-48 and 63-47) can also be established.
			Spuriously opens during injection mode.	Hot short in control wiring; operator error	Ind. light in MCR; decrease in RWST level; increase in sump level	Loss of RWST inventory until operator responds. Unintentional flooding of containment. Inadvertent premature switchover of RHRP A-A suction to sump. Loss of RHRP A-A (NPSH/Vortexing)	None. RHR pump B-B available	

Table 6.3-8 Failure Modes And Effects Analysis For Active Failures For The Safety Injection System (Page 18 of 70)

Item No.	Component	Function	Failure Mode	Potential Cause	Method of Detection	Effect on System	Effect on Plant	Remarks
		Closes for isolation of passive failure	No additional failures assumed					
19	FCV-63-73 Train B	Provides suction flow path from containment sump to RHRP B-B to initiate recirc. mode of ECCS	Fails to open or stuck closed	Mechanical failure; Train B power failure; Train B SI (latched) signal failure; Train B RWST LVL Lo/CNTMT sump LVL Hi signal failure	Alarm, valve position ind. light in MCR	RHRP B-B suction cannot be switched over from RWST to containment sump. To prevent depletion of RWST, operator may secure RHRP B-B resulting in loss of redundancy in recirc.	None. RHRP A-A, independently and automatically aligned to sump, can provide adequate recirc. flow	With RHRP B-B secured, the FCV-63-11 suction path to SIPs will be unavailable. However, alternate paths for SIP suction can be established.

Table 6.3-8 Failure Modes And Effects Analysis For Active Failures For The Safety Injection System (Page 19 of 70)

Item No.	Component	Function	Failure Mode	Potential Cause	Method of Detection	Effect on System	Effect on Plant	Remarks
			Spuriously opens during injection mode.	Hot short in control wiring; Operator error	Ind. light in MCR; decrease in RWST level; increase in sump level.	Loss of RWST inventory until operator responds. Unintentional flooding of containment. Inadvertent switchover of RHRP B-B suction to sump. Loss of RHRP B-B (NPSH/Vortexing).	None RHRP A-A available	
		Closes for isolation of passive failures	No additional failures assumed					

Table 6.3-8 Failure Modes And Effects Analysis For Active Failures For The Safety Injection System (Page 20 of 70)

Item No.	Component	Function	Failure Mode	Potential Cause	Method of Detection	Effect on System	Effect on Plant	Remarks
20	FCV-63-8 Train A	Opens to provide primary flow path for CCPs' suction and alternate flow path for SIPs' suction from RHRP A-A discharge (recirc. mode)	Fails to open, stuck closed or spurious opening	Mechanical failure; Train A power failure; operator error	Valve position ind. lights in MCR	Loss of redundancy in flow paths from RHRS to suction of CCPs & SIPs.	None. Alternate suction flow path for CCPs' suction can be establishe d from independe nt RHR Train B via FCV's 63-11, 63-48, 63-47, 63-6/63-7 and 63-177	In the alternate flow path, Train A valves 63-47 and 63-177 are normally open and do not close for recirc. alignment. Train A valve 63-7 is normally closed, but is in parallel with Train B valve 63-6. The alternate flow path, therefore, can be established even if due to Train A power failure.
		Remains closed during injection mode and closes for isolation of passive failures	Spuriously opens during injection mode No additional failure assumed beyond passive failure	Hot short in control wiring; operator error	Indicator light in MCR	Suction pressure boost to CCPs	None. See 'Remarks'	Spurious operation is very unlikely due to interlocks with valves 63-72, 63-3, 63-4 & 63-175, protective covers on HS and use of double contacts of HS & XS.

Table 6.3-8 Failure Modes And Effects Analysis For Active Failures For The Safety Injection System (Page 21 of 70)

Item No.	Component	Function	Failure Mode	Potential Cause	Method of Detection	Effect on System	Effect on Plant	Remarks
21	FCV-63-11 Train B	Opens to provide primary flow path for SIPs' suction and alternate flow path for CCPs' suction from RHRP B-B discharge (recirc. mode)	Fails to open, stuck closed or spurious closing	Mechanical failure; Train B power failure; operator error	Status monitor and valve position ind. lights in MCR	Loss of redundancy in flow paths from RHRS to suction of CCPs and SIPs.	None. Alternate flow path for SIPs' suction can be establishe d from independe nt RHR Train A via FCV's 63-8, 63-177, 63-6/63-7, 63-48 and 63-47	In the alternate flow path, Train B valve 63-48 is normally open. Train B valve 63-6 is normally closed, but in parallel with Train A valve 63-7. The alternate flow path, therefore, can be established even if valve 63-11 fails due to train B power failure.
		Remains closed during injection mode and closes for isolation of passive failures	Spuriously opens during the injection mode No additional failure assumed beyond passive failure	Hot short in control wiring; operator error	Ind. light in MCR	Suction pressure boost to SIPs.	None. See 'Remarks'	Spurious operation is very unlikely due to interlocks with valves 63-73, 63-3, 63-4 & 63-175 protective covers on HS and use of double contacts of HS & XS

Table 6.3-8 Failure Modes And Effects Analysis For Active Failures For The Safety Injection System (Page 22 of 70)

Item No.	Component	Function	Failure Mode	Potential Cause	Method of Detection	Effect on System	Effect on Plant	Remarks
22	Permissive interlock common to FCVs 63-8 and 63-11	Permit remote manual opening of MOVs 63-8 and 63-11 only if SIP min. flow circuit valve 63-3 (Train A) or valves 63-4 and 63-175 (Train B) are closed, to prevent contamination of RWST with sump water during recirc. mode.	No credible failure mode. See 'Remarks' column	See 'Remarks' column	See 'Remarks' column	None. See 'Remarks' column	None. See 'Remarks' column	The interlock for each valve is implemented using internal limit switches from the same division valve (i.e., 63-3 in the 63-8 circuit and 63-4 and 63-175 in the 63-11 circuit), and auxiliary (separation) relay contacts from stem-mounted limit switches of opposite division valves. A review of the schematics shows that no single failure of the stem-mounted LSs or power supplies in L-10, L-11A or L-11B can prevent the opening of both valves 63-8 and 63-11.

Table 6.3-8 Failure Modes And Effects Analysis For Active Failures For The Safety Injection System (Page 23 of 70)

Item No.	Component	Function	Failure Mode	Potential Cause	Method of Detection	Effect on System	Effect on Plant	Remarks
23	FCV-74-33 Train A	Closes to provide train separation in RHRS for 1) passive failure protection (cold leg recirc. mode) 2) for increased RHRS resistance to accommodate RHR A-A cold leg injection and containment spray, and 3) for increased RHRS resistance for RHR B-B HL injection	Fails to close or stuck open No additional failures assumed following a passive failure	Mechanical failure, Train A power failure; operator error.	Alarm, ind. light in MCR	RHRP A-A remains connected to cross-tie line up to Train B valves 74-35 and 63-172	None. Train separation can be achieved by closing Train B valves 74-35 and 63-172. SIP can be used for HL recirc.	Valve kept open during reactor operation and injection mode. Spurious closing during injection as a failure mode is not a problem since both RHRPs would be available.

Table 6.3-8 Failure Modes And Effects Analysis For Active Failures For The Safety Injection System (Page 24 of 70)

Item No.	Component	Function	Failure Mode	Potential Cause	Method of Detection	Effect on System	Effect on Plant	Remarks
23 (cont'd)	FCV-74-33 Train A	Opens to provide flow path for RHRP A-A discharge to hot legs 1 and 3 (HL recirc. mode)	Fails to open, stuck closed or spurious closing	Mechanical failure; Train A power failure; operator error	Ind. light in MCR	RHRP A-A unavailable for hot leg recirc.	None. RHRP B-B can provide recirc. flow to HLs 1 and 3 through valves 74-35 and 63-172. SIPs can also provide HL recirc.	

Table 6.3-8 Failure Modes And Effects Analysis For Active Failures For The Safety Injection System (Page 25 of 70)

Item No.	Component	Function	Failure Mode	Potential Cause	Method of Detection	Effect on System	Effect on Plant	Remarks
24	FCV-74-35 Train B	Closes to provide train separation in RHRS for 1) passive failure protection (cold leg recirc. mode) 2) for increased RHRS resistance to accommodate RHR B-B cold leg injection and containment spray, and 3) for increased RHRS resistance for RHR A-A HL injection	Fails to close or stuck open No additional failure assumed following a passive failure	Mechanical failure; Train B power failure; operator error	Alarm, ind. light in MCR	RHRP B-B remains connected to cross-tie line up to train A valve 74-33	None. Train separation can be achieved by closing Train A valve 74-33. SIP can be used for HL recirc.	Valve kept open during reactor operation and injection mode. Spurious closing during injection as a failure mode is not a problem since both RHRPs would be available

Table 6.3-8 Failure Modes And Effects Analysis For Active Failures For The Safety Injection System (Page 26 of 70)

Item No.	Component	Function	Failure Mode	Potential Cause	Method of Detection	Effect on System	Effect on Plant	Remarks
		Opens to provide flow path for RHRP B-B discharge to hot legs 1 and 3 (HL recirc. mode)	Fails to open, stuck closed or spurious closing	Mechanical failure; Train B power failure; operator error	Ind. light in MCR	RHRP B-B unavailable for hot leg recirc.	None. HL 1 and 3 recirc. flow can be provided by opening Train A valve 74-33 & Train B 63-172. SIPs can also provide HL recirc.	
25	FCV-63-172 Train B	Opens to provide flow path for RHRP flow to hot legs 1 and 3 (HL recirc. mode)	Fails to open, stuck closed or spurious closing	Mechanical failure; Train B power failure; operator error	Ind. light in MCR	No RHRP flow to hot legs 1 and 3	None. SIP A-A can supply HLs 1 and 3, with suction flow from RHRP A-A by opening Train A valves 63-8 and 63-7	FCV-63-172 is closed except during HL recirc. mode.

Table 6.3-8 Failure Modes And Effects Analysis For Active Failures For The Safety Injection System (Page 27 of 70)

Item No.	Component	Function	Failure Mode	Potential Cause	Method of Detection	Effect on System	Effect on Plant	Remarks
		Remains closed during CL injection mode	Spuriously opens	Hot short in control wiring; operator error	Ind. light in MCR	Inadvertent flow to HLs 1 & 3 and reduced flow to RCS CLs	None. Both RHR pumps are available and provide sufficient flow to CLs (4) & HLs 1 & 3.	Spurious operation very unlikely due to protective cover on HS and the use of double contacts on HS & XS.
		Closes to provide passive failure isolation	No additional failures assumed					

Table 6.3-8 Failure Modes And Effects Analysis For Active Failures For The Safety Injection System (Page 28 of 70)

Item No.	Component	Function	Failure Mode	Potential Cause	Method of Detection	Effect on System	Effect on Plant	Remarks
26	FCV-63-5 Train B	Provide suction flow path from RWST to suction of SIPs (injection mode)	Spurious closing (not a credible failure mode). See 'Remarks' column	See 'Remarks' column	Alarm, ind. light in MCR	See 'Remarks' column	See 'Remarks' column	Procedures do not require the normally open valve to be closed until switchover to recirc. mode. HS provided with protective cover. Very unlikely error of action. Probability of spurious closing is reduced by protective cover over HS and by wiring HS & XS contacts on both sides of contactors. The failure mode is, therefore, not credible (potential cause). However, if it did occur, SIPs will not be available during injection mode. (Effect on system) Both CCPs, both RHRPs and all four accumulators provide injection flow. SIPs if undamaged, can be realigned for recirc. mode (Effect on plant)

Table 6.3-8 Failure Modes And Effects Analysis For Active Failures For The Safety Injection System (Page 29 of 70)

Item No.	Component	Function	Failure Mode	Potential Cause	Method of Detection	Effect on System	Effect on Plant	Remarks
		Isolate RWST from suction of SIPs during recirc. mode.	Fails to close or stuck open	Mechanical failure; Train B power failure	Ind. light in MCR	None. Check valve 63-510 prevents backflow from sump to RWST	None.	
		Passive failure (recirc. mode) isolation	No additional failure assumed beyond the passive failure					

Table 6.3-8 Failure Modes And Effects Analysis For Active Failures For The Safety Injection System (Page 30 of 70)

Item No.	Component	Function	Failure Mode	Potential Cause	Method of Detection	Effect on System	Effect on Plant	Remarks
27	Check Valve 63-510	Opens to provide suction flow path from RWST to SIPs (injection mode)	Stuck closed. See 'Remarks' column	Mechanical failure	Erratic readings on SIP motor ammeters, SIP discharge pressure indicators PI-63-19 and PI-63-150 and SIP discharge flow indicators FI-63-20 and FI-63-151, all in MCR. Local indication of SIP suction pressure on PI-63-9 and PI-63-14	SIPs unavailable	See 'Remarks' column	Per IEEE std. 500-1984, check valves at PWRs have a failure rate (fail to open) of 60 per million demands, which makes this a credible failure mode. Relative to the failure mode, the Design Criteria document does not require consideration of this check valve as an active component for the opening function (and therefore, its failure to open) during the injection mode. However, during the recirculation mode it is an active component and its failure to close is analyzed below. The effect on the plant if "stuck closed" failure mode were to be considered, is SIPs unavailable for injection mode. Both CCPs, both RHRPs and all four accumulators provide injection flow.

Table 6.3-8 Failure Modes And Effects Analysis For Active Failures For The Safety Injection System (Page 31 of 70)

Item No.	Component	Function	Failure Mode	Potential Cause	Method of Detection	Effect on System	Effect on Plant	Remarks
		Backseats to prevent flow from sump to RWST (Recirc. mode)	Stuck open or fails to backseat	Mechanical failure	Change in RWST level and temperature. Radcon surveys of RWST area	None. FCV-63-5 is closed to complete switchover to recirc. mode.	None.	Per IEEE Std. 500-1984, failure mode is internal leakage rather than gross failure to close.
28	FCV-63-47 Train A	Provide suction flow path for SIP A-A (injection mode)	Spurious closing	Operator error, hot short in control circuit	Alarm, ind. light in MCR	SIP A-A unavailable (injection mode)	None. SIP B-B, both CCPs, both RHRPs and all four accumulators remain available to provide adequate injection flow for all break sizes.	Failure unlikely in both (injection and recirc.) modes since the valve is not required to be closed except for isolation of passive failures. Failure of valve to close is not listed as a failure mode since the passive failure requiring its operation is the single failure.

Table 6.3-8 Failure Modes And Effects Analysis For Active Failures For The Safety Injection System (Page 32 of 70)

Item No.	Component	Function	Failure Mode	Potential Cause	Method of Detection	Effect on System	Effect on Plant	Remarks
		Provides connection to recirc. flow path between suction of SIPs and CCPs (Recirc. mode) Closes for isolation of passive failures (see 'Remarks' column)	Spurious closing	Operator error, hot short in control circuit	Alarm, ind. light in MCR	No redundant suction flow path from RHRP B-B to SIP A-A and CCPs or from RHRP A-A to SIP B-B (recirc. mode)	None. All pumps remain available, due to flow path from RHRP A-A to SIP A-A & CCPs (63-8, 63-177, and 63-6 or 63-7) and from RHRP B-B to SIP B-B (63-11)	

Table 6.3-8 Failure Modes And Effects Analysis For Active Failures For The Safety Injection System (Page 33 of 70)

Item No.	Component	Function	Failure Mode	Potential Cause	Method of Detection	Effect on System	Effect on Plant	Remarks
29	FCV-63-48 Train B	Provide suction flow path for SIP B-B (injection mode)	Spurious closing	Operator error; hot short in control circuit	Alarm, ind. light in MCR	SIP B-B unavailable (injection mode)	None. SIP A-A, both CCPs, both RHRPs, and all four accumulators remain available to provide adequate injection flow for all break sizes.	Failure unlikely in both (injection and recirc.) modes since the valve is not required to be closed except for isolation of passive failures. Failure of valve to close is not listed as a failure mode since the passive failure requiring its operation is the single failure.

Table 6.3-8 Failure Modes And Effects Analysis For Active Failures For The Safety Injection System (Page 34 of 70)

Item No.	Component	Function	Failure Mode	Potential Cause	Method of Detection	Effect on System	Effect on Plant	Remarks
		Provides connection for recirc. flow path between suction of SIPs and CCPs (Recirc. mode) Closes for isolation of passive failures (See 'Remarks' column)	Spurious closing	Operator error; hot short in control circuit	Alarm, ind. light in MCR	No redundant suction flow path to RHRP A-A to SIP B-B or from RHRP B-B to SIP A-A and CCPs	None. All pumps remain available, due to flow path from RHRP A-A to SIP A-A and CCPs (63-8, 63-177, 63-6/63-7) and from RHRP B-B to SIP B-B (63-11)	
30	Safety Injection Pump A-A	Provides emergency core cooling by pumping into RCS cold legs, borated water from RWST during injection mode and contents of containment sump via RHR pumps during recirc. mode.	Fails to start; fails while running	Mechanical failure; Train A power failure, Train A SI signal failure; motor overload; electrical fault; operator error (HS in wrong position)	Annunciation, indicating lights in main control room, no motor amps, no header flow, no pump discharge pressure	Loss of redundancy in intermediate head portion of SI System	None. SI Pump B-B can provide required intermediate head injection flow for design basis range of break sizes.	SIPs start automatically on SI signal. Automatic operation of each SIP in ECCS injection mode is completely independent of the SIP.

Table 6.3-8 Failure Modes And Effects Analysis For Active Failures For The Safety Injection System (Page 35 of 70)

Item No.	Component	Function	Failure Mode	Potential Cause	Method of Detection	Effect on System	Effect on Plant	Remarks
31	Safety Injection Pump B-B	Provides emergency core cooling by pumping into RCS cold legs, borated water from RWST during injection mode and contents of containment sump via RHR pumps during recirc. mode.	Fails to start; fails while running	Mechanical failure; Train B power failure, Train B SI signal failure; motor overload; electrical fault; operator error (HS in wrong position)	Annunciation, indicating lights in main control room, no motor amps, no header flow, no pump discharge pressure	Loss of redundancy in intermediate head portion of SI System	None. SI Pump A-A can provide required intermediate head injection flow for design basis range of break sizes.	SI pumps start automatically on SI signal. Automatic operation of each SIP in ECCS injection mode is completely independent of other SIP.

Table 6.3-8 Failure Modes And Effects Analysis For Active Failures For The Safety Injection System (Page 36 of 70)

Item No.	Component	Function	Failure Mode	Potential Cause	Method of Detection	Effect on System	Effect on Plant	Remarks
32	FCV-63-3 Train A	Provide min. flow recirc. path from SIP A-A & B-B to RWST for pump protection (injection mode)	Spurious closing (not a credible failure mode). See 'Remarks' column	See 'Remarks' column	Alarm, ind. light in MCR	See 'Remarks' column	See 'Remarks' column	Procedures do not require closing this valve until switchover to CL recirc. mode. Probability of spurious closing is reduced by protective cover over HS and by wiring HS & XS contacts on both sides of contactors. This failure mode is, therefore, not credible (potential cause). However, if it did occur, the min. flow circuit for both SIPs will be unavailable, with damage to SIPs possible for small break LOCA and slow RCS depressurization (effect on system). Potential loss of intermediate head SI (effect on plant).

Table 6.3-8 Failure Modes And Effects Analysis For Active Failures For The Safety Injection System (Page 37 of 70)

Item No.	Component	Function	Failure Mode	Potential Cause	Method of Detection	Effect on System	Effect on Plant	Remarks
32 (cont'd)	FCV-63-3 Train A	Isolate SIP A-A & B-B miniflow to RWST when SIP suction is from containment sump via RHRPs, to prevent contamination of RWST (recirc. mode)	Fails to close, stuck open or spurious reopening	Mechanical failure; Train A power failure; operator error	Ind. light in MCR	None. Operator can isolate RWST by closing Train B valves 63-4 and 63-175 and then open valves 63-8 or 63-11 to complete switchover of CCP and SIP suction.	None	Schematics for valves 63-8 and 63-11 were reviewed and it was determined that at least one suction path to both SIPs and both CCPs can be established with a Train A power failure and failure of non-divisional power supply to panel L-10 or failure of any stem mounted-limit switch.
33	FCV-63-4 Train B	Connect SIP A-A discharge to min. flow recirc. line (injection mode)	Spurious closing	Operator error; hot short in control wiring	Alarm, ind. light in MCR	Min. flow circuit for SIP A-A protection unavailable, with damage to SIP A-A possible for small break LOCA and slow RCS depressurization	None. SIP B-B still available	Failure mode very unlikely since procedures do not require closing this valve until switchover to CL recirc. mode.

Table 6.3-8 Failure Modes And Effects Analysis For Active Failures For The Safety Injection System (Page 38 of 70)

Item No.	Component	Function	Failure Mode	Potential Cause	Method of Detection	Effect on System	Effect on Plant	Remarks
		Isolate SIP A-A miniflow to RWST when SIP suction is from containment sump via RHRPs, to prevent contamination of RWST (recirc. mode)	Fails to close, stuck open or spuriously reopens	Mechanical failure; Train B power failure; operator error	Ind. light in MCR	None. Operator can isolate RWST by closing Train A valve 63-3 and then open 63-8 or 63-11 to complete switchover of CCP and SIP suction to sump	None	Schematics for valves 63-8 and 63-11 were reviewed to determine that at least one suction path to both SIPs and both CCPs can be established with a Train B power failure and failure of non-divisional power to panel L-10 or failure of any stem-mounted limit switch.
34	FCV-63-175 Train B	Connect SIP B-B discharge to min. flow recirc. line (injection mode)	Spurious closing	Operator error; hot short in control wiring	Alarm, ind. light in MCR	Min. flow circuit for SIP B-B protection unavailable, with damage to SIP B-B possible for small break LOCA and slow RCS depressurization	None. SIP A-A still available	Failure mode very unlikely since procedures do not require closing this valve until switchover to CL recirc. mode.

Table 6.3-8 Failure Modes And Effects Analysis For Active Failures For The Safety Injection System (Page 39 of 70)

Item No.	Component	Function	Failure Mode	Potential Cause	Method of Detection	Effect on System	Effect on Plant	Remarks
		Isolate SIP B-B discharge from min flow recirc. line when SIP B-B suction is from containment sump via RHRPs, to prevent contamination of RWST (recirc. mode)	Fails to close or stuck open or spuriously reopens	Mechanical failure; Train B power failure; operator error	Ind. light in MCR	None. Operator can isolate RWST by closing train A valve 63-3 and then open 63-8 or -11 to complete switchover of CCP and SIP suction to sump.	None.	Schematics for valves 63-8 and 63-11 were reviewed to determine that at least one suction path to both SIPs and both CCPs can be established with a Train B power failure and failure of non-divisional power to panel L-10 or failure of any stem-mounted limit switch.
35	Check valve 63-524	Provides discharge flow path for SIP A-A	Stuck closed	Mechanical failure	Pump motor amps less than full load; no SIP A-A flow as indicated on FI-63-151 in MCR	Loss of redundancy in intermediate head injection portion of SI System	None. SIP B-B can provide required injection flow.	Failure mode is credible; Per IEEE Std. 500-1984, check valves at PWRs have a failure rate (fail to open) of 60 per million demands.
		Prevents reverse flow of SIP B-B discharge through SIP A-A (injection mode)	Stuck open or fails to backseat	Mechanical Failure	Pump motor amps above full load, discharge pressure high on idle pump	See 'Remarks' column	See 'Remarks' column	Since the failure of the check valve is the single failure postulated, both SI Pumps A-A & B-B can be assumed to operate.

Table 6.3-8 Failure Modes And Effects Analysis For Active Failures For The Safety Injection System (Page 40 of 70)

Item No.	Component	Function	Failure Mode	Potential Cause	Method of Detection	Effect on System	Effect on Plant	Remarks
36	Check Valve 63-526	Provides discharge flow path for SIP B-B	Stuck closed	Mechanical failure	Pump motor amps less than full load; No SIP B-B flow as indicated on FI-63-20 in MCR	Loss of redundancy in intermediate head injection portion of SI system	None. SIP A-A can provide required injection flow.	Failure mode is credible; Per IEEE Std. 500-1984, check valves at PWRs have a failure rate (fail to open) of 60 per million demands.
		Prevents reverse flow of SIP A-A discharge through SIP B-B (injection mode)	Stuck open or fails to backseat	Mechanical failure	Pump motor amps above full load. Discharge pressure high on idle pump	See 'Remarks' column	See 'Remarks' column	Since the failure of the check valve is the single failure postulated, both SI Pumps A-A & B-B can be assumed to operate.
37	Check Valve 63-528	Opens to connect SIP A-A discharge to min. flow recirc. (injection mode)	Stuck closed	Mechanical failure	Possible abnormal readings on pump motor ammeter; low flow on FI-63-2 local. SIP A-A damage.	Min. flow circuit for SIP A-A protection unavailable, with damage to SIP A-A possible for small break LOCA and slow RCS depressuirzati on	None. SIP B-B still available	Failure mode is credible; Per IEEE Std. 500-1984, check valves at PWRs have a failure rate (fail to open) of 60 per million demands
		Prevents reverse flow of SIP B-B discharge through SIP A-A (injection mode)	Stuck open or fails to backseat	Mechanical failure	Pump motor amps above full load. Discharge pressure high on idle pump	See 'Remarks' column	See 'Remarks' column	Since the failure of the check valve is the single failure postulated, both SI Pumps A-A & B-B can be assumed to operate.

Table 6.3-8 Failure Modes And Effects Analysis For Active Failures For The Safety Injection System (Page 41 of 70)

Item No.	Component	Function	Failure Mode	Potential Cause	Method of Detection	Effect on System	Effect on Plant	Remarks
38	Check Valve 63-530	Opens to connect SIP B-B discharge min. flow recirc. (injection mode)	Stuck closed	Mechanical failure	Possible abnormal readings on pump motor ammeter; low flow on FI-63-2 local. SIP B-B damage.	Min. flow circuit for SIP B-B protection unavailable, with damage to SIP B-B possible for small break LOCA and slow RCS depressurizati on	None. SIP A-A still available	Failure mode is credible; Per IEEE Std. 500-1984, check valves at PWRs have a failure rate (fail to open) of 60 per million demands
		Prevents reverse flow of SIP A-A discharge through SIP B-B (injection mode)	Stuck open or fails to backseat	Mechanical failure	Pump motor amps above full load; discharge pressure high on idle pump	See 'Remarks' column	See 'Remarks' column	Since the failure of the check valve is the single failure postulated, both SI pumps A-A & B-B can be assumed to operate.
39	FCV-63-39 Train A	Normally locked open valve provides flow path (parallel with FCV-63-40) for discharge flow of CCPs to cold legs (injection and recirc. modes)	Spurious closing, See 'Remarks' column.	Operator error; hSee 'Remarks' column	None	None. Train B valve 63-40 maintains flow path	None	Operator error not credible since valve is locked open and procedures do not require closing this Valve under any operating scenario.

Table 6.3-8 Failure Modes And Effects Analysis For Active Failures For The Safety Injection System (Page 42 of 70)

Item No.	Component	Function	Failure Mode	Potential Cause	Method of Detection	Effect on System	Effect on Plant	Remarks
								Failure to close is not listed since closing is not a SIS safety function. Breaker is locked open to prevent spurious operation.
40	FCV-63-40 Train B	Normally locked open valve provides flow path (in parallel with FCV-63-39) for discharge flow of CCPs to cold legs (injection and recirc. modes)	Spurious closing, See 'Remarks' column	Operator errors; hot, See 'Remarks column.	None	None. Train A valve 63-39 maintains flow path	None	Operator error is not credible since valve is locked open and procedures do not require closing this valve under any operating scenario.
								Failure to close is not listed since closing is not a SIS safety function. Breaker is locked open to prevent spurious operation.

Table 6.3-8 Failure Modes And Effects Analysis For Active Failures For The Safety Injection System (Page 43 of 70)

Item No.	Component	Function	Failure Mode	Potential Cause	Method of Detection	Effect on System	Effect on Plant	Remarks
41	FCV-63-25 Train B	Provide flow path (in parallel with FCV-63-26) for discharge flow of CCPs to cold legs (injection and recirc. modes) Closes to isolate passive failures or terminate CL injection.	Fails to open, stuck closed or spuriously recloses after opening	Mechanical failure; Train B power failure; Train B SI signal failure; operator error	Alarm, ind. light in MCR	None. FCV-63-26 independently and automatically opens to establish flow path.	None See 'Remarks column	Failure to close not listed as a failure mode since the passive failure requiring its operation is the single failure. SI termination of CCP cold leg injection can be accomplished by local valve operations if necessary
42	FCV-63-26 Train A	Provide flow path (in parallel with FCV-63-25) for discharge flow of CCPs to cold legs (injection and recirc. modes) Closes to isolate passive failures or terminate CL injection.	Fails to open, stuck closed or spuriously recloses after opening	Mechanical failure; Train A power failure; Train A SI signal failure; operator error	Alarm, ind. light in MCR	None. FCV-63-25 independently and automatically opens to establish flow path.	None See 'Remarks column	Failure to close not listed as a failure mode since the passive failure requiring its operation is the single failure. SI termination of CCP cold leg injection can be accomplished by local valve operations if necessary

Table 6.3-8 Failure Modes And Effects Analysis For Active Failures For The Safety Injection System (Page 44 of 70)

Item No.	Component	Function	Failure Mode	Potential Cause	Method of Detection	Effect on System	Effect on Plant	Remarks
43	FCV-63-152 Train A	Provide flow path from SIP A-A discharge to cold legs (injection and CL recirc. modes)	Spurious closing	Operator error; hot short in control wiring	Alarm, ind. light in MCR, motor amperes less than full load, low flow indication on FI-63-151	No redundancy in SIP portion of cold leg SIS	None. SIP B-B through Train B valve 63-153 provides adequate CL flow.	Normally open valve; procedures do not require closing until switchover to HL recirc. for train isolation
		Closes to provide train isolation for HL recirc mode	Fails to close; stuck open or spuriously reopens after closing	Mechanical failure; Train A power failure; hot short in control wiring; operator error	Ind. light in MCR. Abnormal flow from SIP A-A	Inability to switch SIP A-A to HL recirc.	None. SIP B-B with Train B valve 63-153 isolated provides adequate recirc. flow.	RHR can also provide HL recirc.
44	FCV-63-153 Train B	Provide flow path from SIP B-B discharge to cold legs (injection and CL recirc. modes)	Spurious closing	Operator error; hot short in control wiring	Alarm, ind. light in MCR, motor amperes less than full load; low flow ind. on FI-63-20	No redundancy in SIP portion of cold leg SIS	None. SIP A-A through Train A valve 63-152 provides adequate CL flow.	Normally open valve, procedures do not require closing until switchover to HL recirc., for train isolation
		Provide train isolation for HL recirc. mode	Fails to close, stuck open or spuriously reopens after closing	Mechanical failure; Train B power failure; hot short in control wiring; operator error	Ind. light in MCR. Abnormal flow from SIP B-B	Inability to switch SIP B-B to HL recirc.	None. SIP A-A with Train A valve 63-152 isolated provides adequate recirc. flow.	RHR can also provide HL recirc.

Table 6.3-8 Failure Modes And Effects Analysis For Active Failures For The Safety Injection System (Page 45 of 70)

Item No.	Component	Function	Failure Mode	Potential Cause	Method of Detection	Effect on System	Effect on Plant	Remarks
45	FCV-63-22 Train B	Provide flow path from discharge of SIPs A-A & B-B to cold legs (injection and CL recirc. modes)	Spurious closing (not a credible failure mode). See 'Remarks' column	See 'Remarks' column	Alarm, nd. light in MCR; no flow indication on FI-63-151 and FI-63-20	See 'Remarks' column	See 'Remarks' column	Valve is normally open, administratively controlled (power off) to minimize possibility of spurious closing by operator. Also, HS has a protective cover. Hot short in control wiring unlikely to cause spurious operation since control and selector switch contacts are wired on both sides of contactors (potential cause). If failure occurs in spite of these precautions, CL injection from SIPs will be unavailable (effect on system). Both CCPs and both RHRPs will be available and will provide injection and CL recirc. flow. For injection mode, all four accumulators are also available (effect on plant)

Table 6.3-8 Failure Modes And Effects Analysis For Active Failures For The Safety Injection System (Page 46 of 70)

Item No.	Component	Function	Failure Mode	Potential Cause	Method of Detection	Effect on System	Effect on Plant	Remarks
45 (cont'd)	FCV-63-22 Train B							Failure to close or stuck open failure mode is not listed since this valve, even though it will be closed for HL recirc. mode, does not have a safety related isolation function. SIP train isolation can be achieved by closing valves 63-152 and 63-153.
46	FCV-63-156 Train A	Provide flow path from SIP A-A discharge to hot legs 1 and 3 (HL recirc. mode)	Fails to open, stuck closed or spuriously recloses	Mechanical failure, Train A power failure; operator error; hot short in control wiring	Ind. light in MCR; no flow indication of FI-63-151; low motor amperes on SIP A-A	No redundancy in SIP flow to hot legs	None. SIP B-B or one RHRP can provide adequate HL recirc. flow.	Normally closed valve, opened only for HL recirc. mode. Spurious operation very unlikely since the HS has a protective cover and contacts of HS & XS are wired on both sides of contactor.
		Closes to isolate HL path to allow adequate CL injection flow, and for passive failures	Spuriously opens	Operator error; hot short in control wiring	Alarm, ind. light in MCR; high flow ind. on FI-63-151; high motor amps on SIP A-A	Simultaneous SIP flow to CL & HL	None. SIP A-A & B-B operating will provide adequate CL injection flow	In the event of a passive failure, any further failures are not assumed.

Table 6.3-8 Failure Modes And Effects Analysis For Active Failures For The Safety Injection System (Page 47 of 70)

Item No.	Component	Function	Failure Mode	Potential Cause	Method of Detection	Effect on System	Effect on Plant	Remarks
47	FCV-63-157 Train B	Provide flow path from SIP B-B discharge to hot legs 2 and 4 (HL recirc. mode)	Fails to open, stuck closed or spuriously recloses	Mechanical failure, Train B power failure; operator error; hot short in control wiring	Ind. light in MCR; no flow indication on FI-63-20; low motor amperes on SIP B-B	No redundancy in SIP flow to hot legs	None. SIP A-A or one RHRP can provide adequate HL recirc. flow.	Normally closed valve, opened only for HL recirc. mode. Spurious operation very unlikely since HS has a protective cover and contacts of HX & XS are wired on both sides of contactor.
		Closes to isolate HL path to allow adequate CL injection flow, and for passive failures	Spuriously opens	Operator error; hot short in control wiring	Alarm, ind. light in MCR; high flow ind. on FI-63-151; high motor amps on SIP B-B	Simultaneous SIP flow to CL & HL	None. SIP A-A & B-B operating will provide adequate CL injection flow	In the event of a passive failure, any further failures are not assumed.

Table 6.3-8 Failure Modes And Effects Analysis For Active Failures For The Safety Injection System (Page 48 of 70)

Item No.	Component	Function	Failure Mode	Potential Cause	Method of Detection	Effect on System	Effect on Plant	Remarks
48	RHR Pump A-A	Provide low pressure, high flow emergency core cooling by pumping into RCS cold legs, borated water from RWST during injection mode and into RCS cold and/or hot legs, contents of containment sump during recirc. mode. Also, provide suction to CCPs and SIPs during recirc. mode.	Fails to start; fails while running	Mechanical failure; Train A power failure; Train A SI signal failure; motor overload electrical fault; operator error (HS in wrong position)	Alarm, ind. light in MCR; HS position	Loss of redundancy in low pressure injection portion of SI system	None. RHRP B-B can provide required low pressure injection flow for large breaks. During recirc. mode, even if failure is due to Train A power failure, suction path from RHRP B-B to both CCPs and both SIPs can be established by opening Train B valves, and through normally open Train A MOV's.	Automatic operation of RHRP B-B in injection and recirc. modes is completely independent of RHRP A-A. RHR spray mode and normal cooldown mode are not within the scope of this FMEA.

Table 6.3-8 Failure Modes And Effects Analysis For Active Failures For The Safety Injection System (Page 49 of 70)

Item No.	Component	Function	Failure Mode	Potential Cause	Method of Detection	Effect on System	Effect on Plant	Remarks
49	RHR Pump B-B	Provide low pressure, high flow emergency core cooling by pumping into RCS cold legs, borated water from RWST during injection mode and into RCS cold and/or hot legs, contents of containment sump during recirc. mode. Also, provide suction to CCPs and SIPs during recirc. mode.	Fails to start; fails while running	Mechanical failure; Train B power failure; Train B SI signal failure; motor overload electrical fault; operator error (HS in wrong position)	Alarm, ind. light in MCR; HS position	Loss of redundancy in low pressure injection portion of SI system	None. RHRP A-A can provide required low pressure injection flow for large breaks. During recirc. mode, even if failure is due to Train B power failure, suction path from RHRP A-A to both CCPs and both SIPs can be established by opening Train A valves, and through normally open Train B MOV's.	Automatic operation of RHRP A-A in injection and recirc. modes is completely independent of RHRP B-B. RHR spray mode and normal cooldown mode are not within the scope of this FMEA.

Table 6.3-8 Failure Modes And Effects Analysis For Active Failures For The Safety Injection System (Page 50 of 70)

Item No.	Component	Function	Failure Mode	Potential Cause	Method of Detection	Effect on System	Effect on Plant	Remarks
50	FCV-74-12 Train A	Opens to provide min. flow path for RHRP A-A protection below low flow setpoint (injection & recirc. modes)	Fails to open, stuck closed or spuriously closed	Mechanical failure; operator error (HS in wrong position); flow switch FIS-74-12 failure; power failure	Ind. light in MCR; low flow alarm (for failure not due to flow switch failure) HS position. Local FIS flow indication	Min. flow circuit for RHRP A-A unavailable, with damage to RHRP A-A possible for small or medium LOCA and slow RCS depressurization	None. RHRP B-B still available	
		Closes to isolate min. flow path above low flow setpoint (injection & recirc. modes)	Fails to close, stuck open or spuriously opened	Mechanical failure; operator error (HS in wrong position). Flow switch FIS-74-12 failure; Power failure	Ind. light in MCR; HS position, local FIS flow indication	Reduced LP-SI flow from RHRP A-A	None. RHRP B-B still available	
51	FCV-74-24 Train B	Opens to provide min. flow path for RHRP B-B protection below low flow setpoint (injection & recirc. modes)	Fails to open, stuck closed or spuriously closed	Mechanical failure; operator error (HS in wrong position); flow switch FIS-74-24 failure; power failure.	Ind. light in MCR; low flow alarm (for failure not due to flow switch failure) HS position.	Min. flow circuit for RHRP B-B unavailable, with damage to RHRP B-B possible for small or medium LOCA and slow RCS depressurization	None. RHRP A-A still available	

Table 6.3-8 Failure Modes And Effects Analysis For Active Failures For The Safety Injection System (Page 51 of 70)

Item No.	Component	Function	Failure Mode	Potential Cause	Method of Detection	Effect on System	Effect on Plant	Remarks
		Closes to isolate min. flow path above low flow setpoint (injection & recirc. modes)	Fails to close, stuck open or spuriously opened	Mechanical failure; operator error (HS in wrong position); flow switch FIS-74-24 failure; power failure.	Ind. light in MCR; HS position; local FIS flow indication	Reduced LP-SI flow from RHRP B-B	None. RHRP A-A still available	
52	Check Valve 74-514	Opens to provide flow path for RHRP A-A discharge (injection & recirc. modes)	Stuck closed	Mechanical failure	Pump motor amps less than full load; low RHRP A-A flow alarm from FIS-74-12	Loss of redundancy in LP-SI	None. RHRP B-B can provide required low head flow	Failure mode is credible; Per IEEE Std. 500-1984, check valves at PWRs have a failure rate (fail to open) of 60 per million demands.
		Prevents reverse flow of RHRP B-B discharge through RHRP A-A (injection & recirc. mode)	Stuck open or fails to backseat	Mechanical failure	Pump motor amps above full load; discharge pressure high on idle pump	See 'Remarks' column	None. RHRP B-B can provide required low head flow	Since the failure of the check valve is the single failure postulated, both RHR Pumps A-A & B-B can be assumed to operate. The new check valve 74-544 also prevents reverse flow.
53	Check Valve 74-515	Opens to provide flow path for RHRP B-B discharge (injection & recirc. modes)	Stuck closed	Mechanical failure	Pump motor amps less than full load; low RHRP B-B flow, alarm from FIS-74-24	loss of redundancy in LP-SI	None. RHRP A-A can provide required low head flow	Failure mode is credible; Per IEEE Std. 500-1984, check valves at PWRs have a failure rate (fail to open) of 60 per million demands.

Table 6.3-8 Failure Modes And Effects Analysis For Active Failures For The Safety Injection System (Page 52 of 70)

Item No.	Component	Function	Failure Mode	Potential Cause	Method of Detection	Effect on System	Effect on Plant	Remarks
		Prevents reverse flow of RHRP A-A discharge through RHRP B-B (injection & recirc. mode)	Stuck open or fails to backseat	Mechanical failure	Pump motor amps above full load; discharge pressure high on idle pump	See 'Remarks' column	None. RHRP A-A can provide required low head flow	Since the failure of the check valve is the single failure postulated, both RHR Pumps A-A & B-B can be assumed to operate. The new check valve 74-545 also prevents reverse flow.
54	Check Valve 74-544	Opens to provide flow path for RHRP A-A discharge (injection & recirc. modes)	Stuck closed	Mechanical failure	Pump motor amps less than full load; low RHRP A-A flow, alarm from FIS-74-12	loss of redundancy in LP-SI	None. RHRP B-B can provide required low head flow	Per IEEE Std. 500-1984, check valves at PWRs have a failure rate (fail to open) of 60 per million demands.
		Prevents miniflow flow of RHRP B-B discharge through RHRP A-A miniflow (injection mode) resulting in inadequate RHRP A-A miniflow.	Stuck open or fails to backseat	Mechanical failure	Pump motor amps above full load; damage to RHRP A-A	RHR pump A-A could have inadequate miniflow & possible damage to RHRP A-A	None. RHRP B-B available.	

Table 6.3-8 Failure Modes And Effects Analysis For Active Failures For The Safety Injection System (Page 53 of 70)

Item No.	Component	Function	Failure Mode	Potential Cause	Method of Detection	Effect on System	Effect on Plant	Remarks
55	Check Valve 74-545	Opens to provide flow path for RHRP B-B discharge (injection & recirc. modes)	Stuck closed	Mechanical failure	Pump motor amps less than full load; low RHRP B-B flow, alarm from FIS-74-24	Loss of redundancy in LP-SI	None. RHRP A-A can provide required low head flow	Per IEEE Std. 500-1984, check valves at PWRs have a failure rate (fail to open) of 60 per million demands.
		Prevents miniflow of RHRP A-A discharge through RHRP B-B miniflow (injection mode) resulting in inadequate RHRP B-B miniflow	Stuck open of fails to backseat	Mechanical failure	Pump motor amps above full load; damage to RHRP B-B	RHR pump B-B could have inadequate miniflow & possible damage to RHRP B-B	None. RHRP A-A available.	

Table 6.3-8 Failure Modes And Effects Analysis For Active Failures For The Safety Injection System (Page 54 of 70)

Item No.	Component	Function	Failure Mode	Potential Cause	Method of Detection	Effect on System	Effect on Plant	Remarks
56	FCV-63-93 Train A	Provide flow path for RHRP discharge to cold legs 2 and 3 (injection and CL recirc. modes)	Spurious closing (not a credible failure mode). See 'Remarks' column	See 'Remarks' column	Alarm ind. light in MCR; possible low flow alarm from FIS-74-12; low flow ind. on FI-63-91 A/B	See 'Remarks' column	See 'Remarks' column	Procedures do not require this normally open valve to be closed until manual switchover to HL recirc. mode. Probability of spurious closing is reduced by protective cover over HS and by wiring HS & XS contacts on both sides of contactors. This failure mode is, therefore, not credible (potential cause). However, if it did occur, ECCS LP injection to loops 2 & 3 would be lost (effect on system). LP injection flow may be inadequate (effect on plant).

Table 6.3-8 Failure Modes And Effects Analysis For Active Failures For The Safety Injection System (Page 55 of 70)

Item No.	Component	Function	Failure Mode	Potential Cause	Method of Detection	Effect on System	Effect on Plant	Remarks
		Isolate RHRP A-A discharge from cold legs 2 and 3 to direct flow directly to hot legs 1 and 3.	Fails to close, stuck open or spuriously reopens	Mechanical failure; Train A power failure; operator error	Ind. light in MCR	No redundancy in LP portion of ECCS if failure due to Train A power failure. RHRP A-A can continue to provide LP-SI flow to CL 2/3 and split flow with HL 1/3 if failure not due to Train A power failure.	None. RHRS Train B can provide adequate flow to suction of SIPs and CCPs. The SIPs can provide HL recirc. flow	Suction path to both SIPs and both CCPs can be established from RHRP B-B discharge by opening Train B valves and through normally open train A valves.
		Isolated for passive failure.	No further failures assumed					

Table 6.3-8 Failure Modes And Effects Analysis For Active Failures For The Safety Injection System (Page 56 of 70)

Item No.	Component	Function	Failure Mode	Potential Cause	Method of Detection	Effect on System	Effect on Plant	Remarks
57	FCV-63-94 Train B	Provide flow path for RHRP discharge to cold legs 1 and 4 (injection and CL recirc. modes)	Spurious closing (not a credible failure mode). See 'Remarks' column	See 'Remarks' column	Alarm, ind. light in MCR; possible low flow alarm from FIS-74-24; low flow ind. on FI-63-92 A/B	See 'Remarks' column	See 'Remarks' column	Procedures do not require this normally open valve to be closed until manual switchover to HL recirc. mode. Probability of spurious closing is reduced by protective cover over HS and by wiring HS & XS contacts on both sides of contactors. This failure mode is, therefore, not credible (potential cause). However, if it did occur, ECCS LP injection to loops 1 & 4 would be lost (effect on system). LP injection flow may be inadequate (effect on plant).

Table 6.3-8 Failure Modes And Effects Analysis For Active Failures For The Safety Injection System (Page 57 of 70)

Item No.	Component	Function	Failure Mode	Potential Cause	Method of Detection	Effect on System	Effect on Plant	Remarks
		Isolate RHRP B-B discharge from cold legs 1 and 4 to direct flow directly to hot legs 1 and 3.	Fails to close, stuck open or spuriously reopens	Mechanical failure; Train B power failure; operator error	Ind. light in MCR	No redundancy in LP portion of ECCS if failure due to Train B power failure. RHRP B-B can continue to provide LP-SI flow to CL 1/4 and split flow with HL 1/3 if failure not due to Train A power failure.	None. RHRS Train A can provide adequate flow to suction of SIPs and CCPs. The SIPs can provide HL recirc. flow	Suction path to both SIPs and both CCPs can be established from RHRP A-A discharge by opening Train A valves and through normally open train B valves.
		Isolated for passive failure.	No further failures assumed					

Table 6.3-8 Failure Modes And Effects Analysis For Active Failures For The Safety Injection System (Page 58 of 70)

Item No.	Component	Function	Failure Mode	Potential Cause	Method of Detection	Effect on System	Effect on Plant	Remarks
58	FCV-63-6 Train B	Provide recirc. mode flow path interconnecting suction of SIPs and CCPs when RHRP discharge is aligned to suction side of CCPs/SIPs (in parallel with Train A FCV-63-7) (recirc. mode)	Fails to open, stuck closed or spuriously recloses	Mechanical failure; Train B power failure; operator error	Ind. light in MCR	None. Independent Train A valve 63-7 can be opened to ensure at least one suction flow path to both SIPs and both CCPs	None	Valve opened by operator during switchover to recirc. If failure is due to Train B power failure, RHRP A-A can provide recirc. flow and suction to SIPs and CCPs by opening of Train A valves and normally open (fail-as-is) Train B valves.
			Spurious opening	Operator error; hot short in control wiring	Ind. light in MCR	None	None	Valves 63-7 and 63-6 are closed during reactor operation and injection mode of SI; If valve is spuriously opened during injection mode, suction headers of CCPs and SIPs are connected through 63-6 and 63-177 (normally open). The headers are already both connected to RWST.

Table 6.3-8 Failure Modes And Effects Analysis For Active Failures For The Safety Injection System (Page 59 of 70)

Item No.	Component	Function	Failure Mode	Potential Cause	Method of Detection	Effect on System	Effect on Plant	Remarks
59	FCV-63-7 Train A	Provide recirc. mode flow path suction of SIPs and interconnecting CCPs when RHRP discharge is aligned to suction side of CCPs/SIPs (in parallel with Train B FCV-63-6) (recirc. mode)	Fails to open, stuck closed or spuriously recloses	Mechanical failure; Train A power failure; operator error	Ind. light in MCR	None. Independent Train B valve 63-6 can be opened to ensure at least one suction flow path to both SIPs and both CCPs	None	Valve opened by operator during switchover to recirc. If failure is due to Train A power failure, RHRP B-B can provide recirc. flow and suction to SIPs and CCPs by opening of Train B valves and normally open (fail-as-is) Train A valves.
59 (cont'd)	FCV-63-7 Train A		Spurious opening	Operator error, hot short in control wiring	Ind. light in MCR	None	None	Valves 63-7 and 63-6 are closed during reactor operation and injection mode of SI; If valve is spuriously opened during injection mode, suction headers of CCPs and SIPs are connected through 63-7 and 63-177 (normally open). The headers are already both connected to RWST.

Table 6.3-8 Failure Modes And Effects Analysis For Active Failures For The Safety Injection System (Page 60 of 70)

Item No.	Component	Function	Failure Mode	Potential Cause	Method of Detection	Effect on System	Effect on Plant	Remarks
60	FCV-63-177 Train A	Normally open valve providing flow path interconnecting suction of SIPs and CCPs from RHRP discharge (recirc. mode)	Spurious closing	Operator error, hot short in control wiring	Ind. light in MCR	No interconnecting flow path to suction of CCPs and SIPs	None	Suction flow path to both CCPs is established by opening valve 63-8, to SIPs by opening valve 63-11 (SIP B-B directly and SIP A-A through normally open valves 63-48 and 63-47)

Table 6.3-8 Failure Modes And Effects Analysis For Active Failures For The Safety Injection System (Page 61 of 70)

Item No.	Component	Function	Failure Mode	Potential Cause	Method of Detection	Effect on System	Effect on Plant	Remarks
61	FCV-63-118 Train A	Provide flow path from Accumulator Tank #1 to cold leg 1	No credible failure mode. See 'Remarks' column	See 'Remarks' column	See 'Remarks' column	See 'Remarks column	See 'Remarks' column	Normally open valve (open in reactor operation as well as injection and recirc. modes of SI) has no credible failure mode because: 1) permissive interlock in close circuit opens on Train A SI signal, 2) Train A SI signal and RCS pressure >1970 psig signal are used in the opening circuit, 3) protection against spurious operation due to hot short in control wiring is provided by using selector and hand switch contacts on line and neutral side of contactors and 4) operator error unlikely due to protective cover over HS (failure mode and potential cause). Breaker is locked open to prevent spurious operation.

Table 6.3-8 Failure Modes And Effects Analysis For Active Failures For The Safety Injection System (Page 62 of 70)

Item No.	Component	Function	Failure Mode	Potential Cause	Method of Detection	Effect on System	Effect on Plant	Remarks
62	FCV-63-98 Train B	Provide flow path from Accumulator Tank #2 to cold leg 2	No credible failure mode. See 'Remarks' column	See 'Remarks' column	See 'Remarks' column	See 'Remarks' column	See 'Remarks' column	Normally open valve (open in reactor operation as well as injection and recirc. modes of SI) has no credible failure mode because: 1) permissive interlock in close circuit opens on Train B SI signal, 2) Train B SI signal and RCS pressure >1970 psig signal are used in the opening circuit, 3) protection against spurious operation due to hot short in control wiring is provided by using selector and hand switch contacts on line and neutral side of contactors and 4) operator error unlikely due to protective cover over HS (failure mode and potential cause). Breaker is locked open to prevent spurious operation.

Table 6.3-8 Failure Modes And Effects Analysis For Active Failures For The Safety Injection System (Page 63 of 70)

Item No.	Component	Function	Failure Mode	Potential Cause	Method of Detection	Effect on System	Effect on Plant	Remarks
63	FCV-63-80 Train A	Provide flow path from Accumulator Tank #3 to cold leg 3	No credible failure mode. See 'Remarks' column	See 'Remarks' column	See 'Remarks' column	See 'Remarks' column	See 'Remarks' column	Normally open valve (open in reactor operation as well as injection and recirc. modes of SI) has no credible failure mode because: 1) permissive interlock in close circuit opens on Train A SI signal, 2) Train A SI signal and RCS pressure >1970 psig signal are used in the opening circuit, 3) protection against spurious operation due to hot short in control wiring is provided by using selector and hand switch contacts on line and neutral side of contactors and 4) operator error unlikely due to protective cover over HS (failure mode and potential cause). Breaker is locked open to prevent spurious operation.

Table 6.3-8 Failure Modes And Effects Analysis For Active Failures For The Safety Injection System (Page 64 of 70)

Item No.	Component	Function	Failure Mode	Potential Cause	Method of Detection	Effect on System	Effect on Plant	Remarks
64	FCV-63-67 Train B	Provide flow path from Accumulator Tank #4 to cold leg 4	No credible failure mode. See 'Remarks' column	See 'Remarks' column	See 'Remarks' column	See 'Remarks' column	See 'Remarks' column	Normally open valve (open in reactor operation as well as injection and recirc. modes of SI) has no credible failure mode because: 1) permissive interlock in close circuit opens on Train B SI signal, 2) Train B SI signal and RCS pressure >1970 psig signal are used in the opening circuit, 3) protection against spurious operation due to hot short in control wiring is provided by using selector and hand switch contacts on line and neutral side of contactors and 4) operator error unlikely due to protective cover over HS (failure mode and potential cause). Breaker is locked open to prevent spurious operation.

Table 6.3-8 Failure Modes And Effects Analysis For Active Failures For The Safety Injection System (Page 65 of 70)

Item No.	Component	Function	Failure Mode	Potential Cause	Method of Detection	Effect on System	Effect on Plant	Remarks
65	Train A Emergency Power	Provides Class 1E diesel-backed power supply to active components of Train A of SI system (injection and recirc. modes)	Loss of, or inadequate, voltage	Diesel generator failure; bus fault (Train A), operator error.	Alarm and indicator in MCR	No redundancy in SI system	None. Four accumulators, CCP B-B, SIP B-B and RHRP B-B remain available and can provide adequate flow for postulated range of break sizes.	Compensating provisions / actions will occur / can be performed for Train “A” valves required to change position following a LOCA to ensure the required function is not disabled due to Train “A” power failure.
66	Train B Emergency Power	Provides Class 1E diesel-backed power supply to active components of Train B of SI system (injection and recirc. modes)	Loss of, or inadequate, voltage	Diesel generator failure; bus fault (Train B), operator error.	Alarm and indicator in MCR	No redundancy in SI system	None. Four accumulators, CCP A-A, SIP A-A and RHRP A-A remain available and can provide adequate flow for postulated range of break sizes.	Compensating provisions / actions will occur / can be performed for Train “B” valves required to change position following a LOCA to ensure the required function is not disabled due to Train “B” power failure.

Table 6.3-8 Failure Modes And Effects Analysis For Active Failures For The Safety Injection System (Page 66 of 70)

Item No.	Component	Function	Failure Mode	Potential Cause	Method of Detection	Effect on System	Effect on Plant	Remarks
67	RWST level loops connected in 2 out of 4 logic. L-63-50 L-63-51 L-63-52 L-63-53	Provides open signal to FCV-63-72 & FCV-63-73 in combination with containment sump level loops and SI signal (initiation of recirc. mode).	One loop fails high	Transmitter failure; open/short circuit in loop wiring, calibrating error	One of four level indicators (LI-63-50 thru LI-63-53) reading higher than other three	Resulting logic of RWST level control for Trains A & B changes from 2 out of 4 to 2 out of 3.	None	Train A & Train B signals for ECCS switchover generated in SSPS if 2 out of 4 RWST level loops show a low level AND 2 out of 4 containment sump level loops show a high level AND a SI signal is present. All components in level loops from transmitter through bistable are Class 1E. Of the four level indicators, two (LI-63-50 & 51) are Class 1E, used for PAM indication (category 1). Single failure analysis for PAM indication is acceptable. Class 1E portions of the level loops are isolated from non-Class 1E portions (e.g., level loops III & IV indicators and level switches for Lo-Lo level alarm) by Class 1E signal conditioner modules.
			One loop fails low	Transmitter failure; open/short circuit in loop wiring, calibrating error	One of four level indicators (LI-63-50 thru LI-63-53) reading lower than other three. Open circuit in trip output wiring would not energize the trip status light on the MCB. Trip output is not fail-safe for these channels. The Tech Spec surveillance test would be the only way to detect this failure.	Resulting logic of RWST level control for Trains A & B changes from 2 out of 4 to 1 out of 3 until failed channel is bypassed; then 2 out of 3.	None	

Table 6.3-8 Failure Modes And Effects Analysis For Active Failures For The Safety Injection System (Page 67 of 70)

Item No.	Component	Function	Failure Mode	Potential Cause	Method of Detection	Effect on System	Effect on Plant	Remarks
68	Containment Sump level Loops connected in 2 out of 4 logic. L-63-180 L-63-181 L-63-182 L-63-183	Provides open signal to FCV-63-72 & FCV-63-73 in combination with RWST level loops and SI signal (initiation of recirc. mode).	One loop fails high	Transmitter failure; open/short circuit in loop wiring, calibrating error	One of four level indicators (LI-63-180 thru LI-63-183) reading higher than other three. Bistable energizes light on MCB.	Resulting logic of Containment Sump level control for Trains A & B changes from 2 out of 4 to 1 out of 3 until failed channel is bypassed; then 2 out of 3.	None	Train A & Train B signals for ECCS switchover generated in SSPS if 2 out of 4 RWST level loops show a low level AND 2 out of 4 containment sump level loops show a high level AND a SI signal is present. All components in level loops from transmitter through bistable are Class 1E. Of the four level indicators, two (LI-63-180 & 181) are Class 1E, used for PAM indication (Category 1). Single failure analysis for PAM indication is acceptable. Non-Class 1E indicators on level loops III & IV are isolated from Class 1E level switches by Class 1E signal conditioner modules.
			One loop fails low	Transmitter failure; open/short circuit in loop wiring, calibrating error	Normal level is 0%. This would be detectable by level indicator only if containment level is rising due to HELB inside containment. Eagle 21 may generate a trouble alarm, but we don't take credit for this. Trip channels are not fail-safe. Tech Spec surveillance test would be	Resulting logic of containment sump level control for Trains A & B changes from 2 out of 4 to 2 out of 3.	None	

Table 6.3-8 Failure Modes And Effects Analysis For Active Failures For The Safety Injection System (Page 68 of 70)

Item No.	Component	Function	Failure Mode	Potential Cause	Method of Detection	Effect on System	Effect on Plant	Remarks
					the only way to detect this failure. For this transmitter this is an 18 month interval.			

Table 6.3-8 Failure Modes And Effects Analysis For Active Failures For The Safety Injection System (Page 69 of 70)

Item No.	Component	Function	Failure Mode	Potential Cause	Method of Detection	Effect on System	Effect on Plant	Remarks
	FCV-62-1228 Train A	Isolates CCPs' normal suction hydrogen vent line (volume control tank) when RWST suction is aligned (in series with LCV-65-132)	Fails to close, stuck open or spurious opening after closing.	Mechanical failure, instrumentation & control failure, operator error.	Status indicating lights	Loss of redundancy in CCP normal suction hydrogen vent line	None. Train B isolation valve FCVV-62-1229 provides isolation of CCP normal suction vent path	Both FCV-62-1228 and FCV-62-1229 are interlocked with LCV-62-132 and LCV-62-133, respectively, in such a way that on a SI signal the valves 62-1228 and 62-1229 will begin to close only when valves 62-132 and 133 begin to close.
70	FCV-62-1229 Train B	Isolates CCPs' normal suction hydrogen vent line (volume control tank) when RWST suction is aligned (in series with LCV-62-133)	Fails to close, stuck open or spurious opening after closing.	Mechanical failure, instrumentation & control failure, operator error.	Status indicating lights	Loss of redundancy in CCP normal suction hydrogen vent line	None. Train A isolation valve FCV-62-1228 provides isolation of CCP normal suction vent path	Both FCV-62-1228 and FCV-62-1229 are interlocked with LCV-62-132 and LCV-62-133, respectively, in such a way that on a SI signal the valves 62-1228 and 62-1229 will begin to close only when valves 62-132 and 133 begin to close.

Table 6.3-8 Failure Modes And Effects Analysis For Active Failures For The Safety Injection System (Page 70 of 70)

Item No.	Component	Function	Failure Mode	Potential Cause	Method of Detection	Effect on System	Effect on Plant	Remarks
71	RFV-63-626, –627, -637, –534, -535, –536, -577	Prevent over pressure in ECCS injection lines.	Spurious lifting of relief valve at a pressure below its set point	Mechanical failure	Alarm due to increase in PRT level and /or pressure except for RFV-63-577. For RFV-63-577, leakage is detected as “unidentified leakage” during periodic RCS leakage surveillance testing.	Reduce ECCS injection flow rate due to diversion of flow into relief line.	None. Flow diverted into relief line is less than worst case ECCS flow reduction due to a single failure (i.e., loss of one train of ECCS).	It is not credible to have a per-existing condition at the time of accident where one or more relief valves have opened spuriously or are experiencing significant seat leakage. The noted “method of detection” provides an adequate means of timely identification of such a condition so that appropriate corrective maintenance can be performed. It is also noted that the RCS pressure will be less than the subject relief valve’s set points with the exception of the small break LOCA during post-accident ECCS operation.

Table 6.3-9 Failure Modes And Effects Analysis For The Safety Injection System (Passive Failures Recirc. Mode) (Page 1 of 4)

Item No.	Component	Function	Failure Mode	Potential Cause	Method of Detection	Effect on System	Effect on Plant	Remarks
1	SIP suction header and valves.	Interconnects SIP A-A & B-B suction (through valves 63-47 & 63-48) with the RWST and RHR sources	Rupture or leak	Mechanical failure; (gasket, flange)	Low SIP discharge flow on FI-63-151, FI-63-20; low SIP discharge pressure on PI-63-150, PI-63-19, all in MCR. Low suction pr. ind. on PI-63-9, PI-63-14 (local); Flooding of SIP room/s and/or pipe chase. Area radiation alarms in pump room/s. RB sump level goes down.	Loss of flow from SIPs and loss of sump inventory until operator isolates the leak; potential damage to SIPs. Contamination of pump rooms and pipe chase from sump water. Leak can be isolated via FCV-63-5, -6, -7, -11, -22, -156, -157.	None. RHRS can provide adequate HL recirc. flow. CCPs provide CL flow.	The passive failure assumed is 50 gpm for 30 minutes in the Aux. Bldg., which will not deplete the RB sump.

Table 6.3-9 Failure Modes And Effects Analysis For The Safety Injection System (Passive Failures Recirc. Mode) (Continued) (Page 2 of 4)

2	Piping and valves in SIP pump discharge to HLs or CLs	Provides flow path from SIP discharge to HLs or CLs	Rupture or leak	Mechanical failure (gasket or flange)	Low/high flow on affected train depending on location of break relative to flow element. Flooding & area radiation alarms in Aux. Bldg. RB sump level goes down.	Reduced flow to one train of HLs and both trains of CLs. Loss of sump inventory until operator secures affected train by isolating FCV-63-5, -6, -7, -11, -22, -156, -157.	None. RHRS can provide adequate HL recirc. flow. CCPs provide CL flow.	The passive failure assumed is 50 gpm for 30 minutes in the Aux. Bldg., which will not deplete the RB sump. The passive failure assumed inside containment is analyzed and found acceptable.

Table 6.3-9 Failure Modes And Effects Analysis For The Safety Injection System (Passive Failures Recirc. Mode) (Continued) (Page 3 of 4)

3	Piping and valves on the suction side of one train of RHRS	Provides flow path from containment sump to RHRP A-A or RHRP B-B	Rupture or leak	Mechanical failure (gasket, flange)	Low flow from affected pump; alarm from FIS-74-12 or FIS-74-24; Flooding of pump room and/or pipe chase; Area radiation alarm in pump room. RB sump level goes down.	Loss of redundancy in suction flow to CCPs, SIPs and one RHRP unavailable for recirc. flow. Loss of sump inventory until operator isolates the leak by closing FCV-63-72, 74-3, 63-93, 74-33, 63-8 if Train A and 63-73, 74-21, 63-94, 74-35, 63-11 if Train B. Contamination of pump room and pipe chase from sump water.	None. One RHRP remains available to supply recirc. flow and suction for SIPs and CCPs.	The passive failure assumed is 50 gpm for 30 minutes in the Aux. Bldg, which will not deplete the sump.
4	Piping and valves in one train of RHR pump discharge to suction of SIPs & CCPs	Provides suction flow path from RHRP discharge to suction of SIPs & CCPs	Rupture or leak	Mechanical failure (gasket, flange)	Low/high flow depending on location of break relative to flow element. Flooding and area radiation alarms in Aux. Bldg. RB sump level goes down.	Reduced recirc. flow. Loss of sump inventory until operator secures affected train by closing FCV-63-72, 74-3, 63-93, 74-33, 63-8 if Train A and 63-73, 74-21, 63-94, 74-35, 63-11 if Train B.	None. RHRP remains available to supply recirc. flow and suction for SIPs and CCPs.	The passive failure assumed is 50 gpm for 30 minutes in the Aux. Bldg., which will not deplete the sump.

Table 6.3-9 Failure Modes And Effects Analysis For The Safety Injection System (Passive Failures Recirc. Mode) (Continued) (Page 4 of 4)

5	Piping and valves between RHRS & HLs 1/3 or CLs	Provides flow path from RHRS to HLs 1/3 or CLs	Rupture or leak (outside containment)	Mechanical failure (gasket, flange)	Low/high flow depending on location of break relative to flow element. Flooding & area radiation alarms in Aux. Bldg. RB sump level goes down.	Loss of recirc. flow from RHRS. Loss of sump inventory until operator isolates the leak by closing FCV-63-72, 74-3, 63-93, 74-33, 63-8 if Train A and 63-73, 74-21, 63-94, 74-35, 63-11 if Train B and FCV-63-172 as required. One train of RHR remains available and SIS provides HL flow; CCPs provide cold leg flow.	None. One train of RHR and both SIPs and CCPs still available to provide flow to HLs and CLs.	The passive failure assumed is 50 gpm for 30 minutes in the Aux. Bldg., which will not deplete the sump. The passive failure assumed inside containment is analyzed and found acceptable.
6	Piping & valves in CCP suction and discharge lines.	Provides flow path to recirc. flow to CLs in recirculation.	Rupture or leak (outside containment)	Mechanical failure (gasket, flange)	Low/high flow depending on location of break relative to flow element. Flooding & area radiation alarms in Aux. Bldg. RB sump level goes down.	Loss of CCP flow to CLs. Loss of sump inventory until operator isolates the leak by closing FCV-63-6, -7, -8, 62-132, -133, -135, -136, 63-25, -26.	None. SIPs and one RHRP remain available for recirc.	The passive failure assumed is 50 gpm for 30 minutes in the Aux. Bldg., which will not deplete the sump. The passive failure assumed inside containment is analyzed and found acceptable.

Table 6.3-10 Principal Eccs Valve Positions (Page 1 of 2)

Valve ID	Normal Position	Cold Leg Inject	Recirculation Cold Leg/ Hot Leg
FCV-63-26,25	Closed	Open	Open/Open
FCV-63-39,40	Open	Open	Open/Open
FCV-63-172	Closed	Closed	Closed/Open
FCV-63-156,157	Closed	Closed	Closed/Open
FCV-63-93,94	Open	Open	Open(1)/Closed(2)
FCV-63-152,153	Open	Open	Open/Closed
FCV-74-3,21	Open	Open	Closed/Closed
FCV-74-33	Open	Open	Closed/Open(3)
FCV-74-35	Open	Open	Closed/Open(4)
FCV-63-8,11	Closed	Closed	Open/Open
FCV-63-5	Open	Open	Closed/Closed
FCV-63-72,73	Closed	Closed	Open/Open
FCV-63-1	Open	Open	Closed/Closed
FCV-63-3,4	Open	Open	Closed/Closed
FCV-63-175	Open	Open	Closed/Closed
FCV-63-6,7	Closed	Closed	Open/Open
LCV-62-135,136	Closed	Open	Closed/Closed
LCV-62-132,133	Open	Closed	Closed/Closed
FCV-62-1228,1229	Open	Closed	Closed/Closed
FCV-74-16,28	Open	Open	Open/Open
FCV-63-118,98,80,67	Open	Open	Open/Open
FCV-63-71	Closed	Closed	Closed/Closed
FCV-63-84	Closed	Closed	Closed/Closed
FCV-63-47,48	Open	Open	Open/Open
FCV-63-23	Closed	Closed	Closed/Closed
FCV-62-90,91	Open	Closed	Closed/Closed
FCV-62-98,99	Open	Open	Open/Open
FCV-63-22	Open	Open	Open/Open or Closed (5)

Table 6.3-10 Principal Eccs Valve Positions (Continued) (Page 2 of 2)

(1) Valve closed if RHR spray is required.
(2) Position shown for RHRP HL recirc.
(3) Position shown for RHRP A-A HL recirc.
(4) Position shown for RHRP B-B HL recirc.
(5) Passive valve - closure not required.

Table 6.3-11 Normalized Decay Heat

Time (Seconds)	Decay Heat Fraction (Btu/Btu
1.0000E+02	4.2815E-02
2.0000E+02	3.6520E-02
4.0000E+02	3.1101E-02
6.0000E+02	2.8237E-02
1.0000E+03	2.4937E-02
2.0000E+03	2.1006E-02
4.0000E+03	1.7195E-02
6.0000E+03	1.5237E-02
1.0000E+04	1.3168E-02
2.0000E+04	1.0825E-02
4.0000E+04	8.9280E-03
6.0000E+04	7.9480E-03
1.0000E+05	6.8570E-03
2.0000E+05	5.5870E-03
4.0000E+05	4.5050E-03
6.0000E+05	3.8960E-03
1.0000E+06	3.2860E-03
2.0000E+06	2.5940E-03
4.0000E+06	2.0160E-03
6.0000E+06	1.7310E-03
1.0000E+07	1.4880E-03

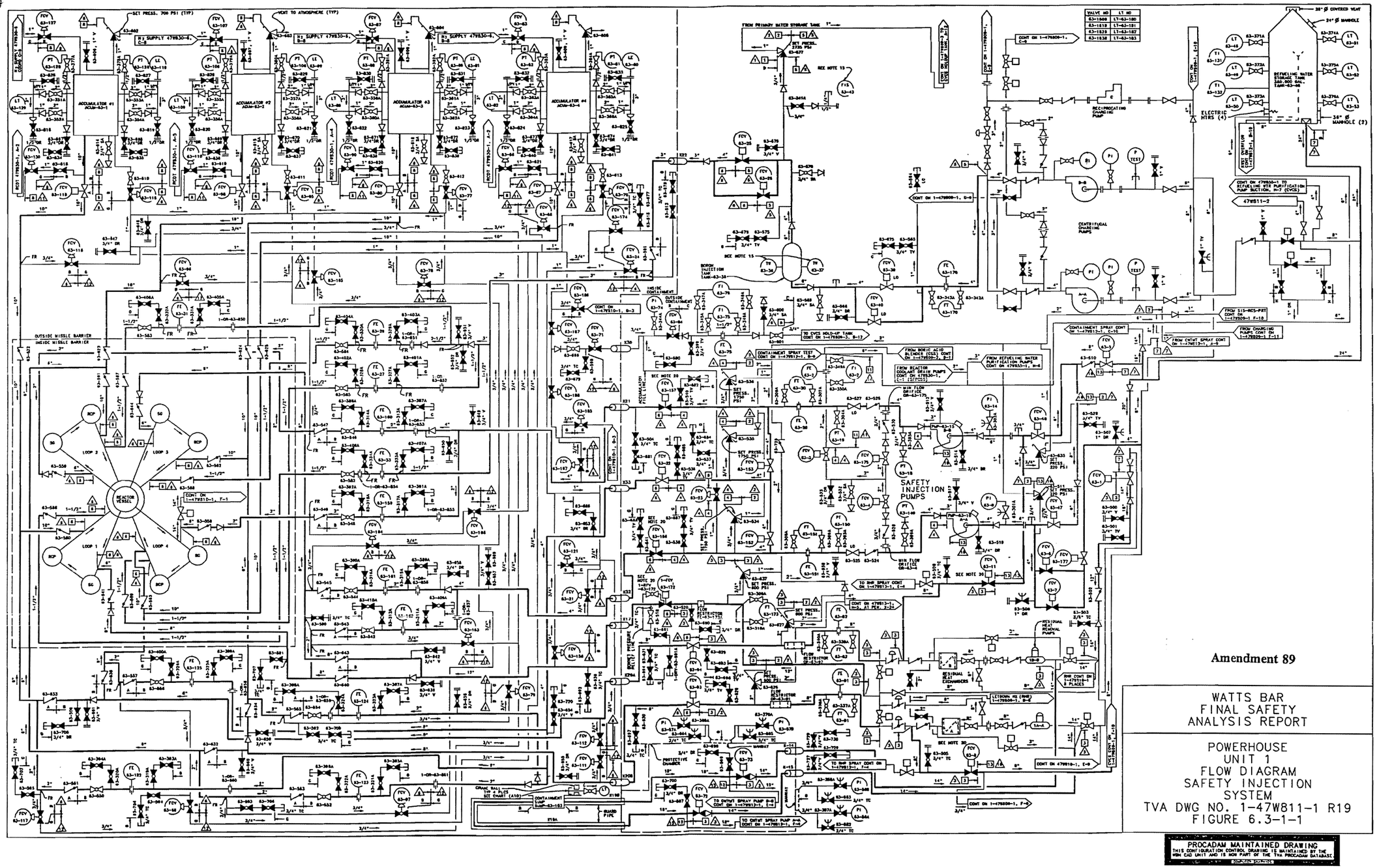

Figure 6.3-1-1 Powerhouse Unit 1 Safety Injection System - Flow Diagram

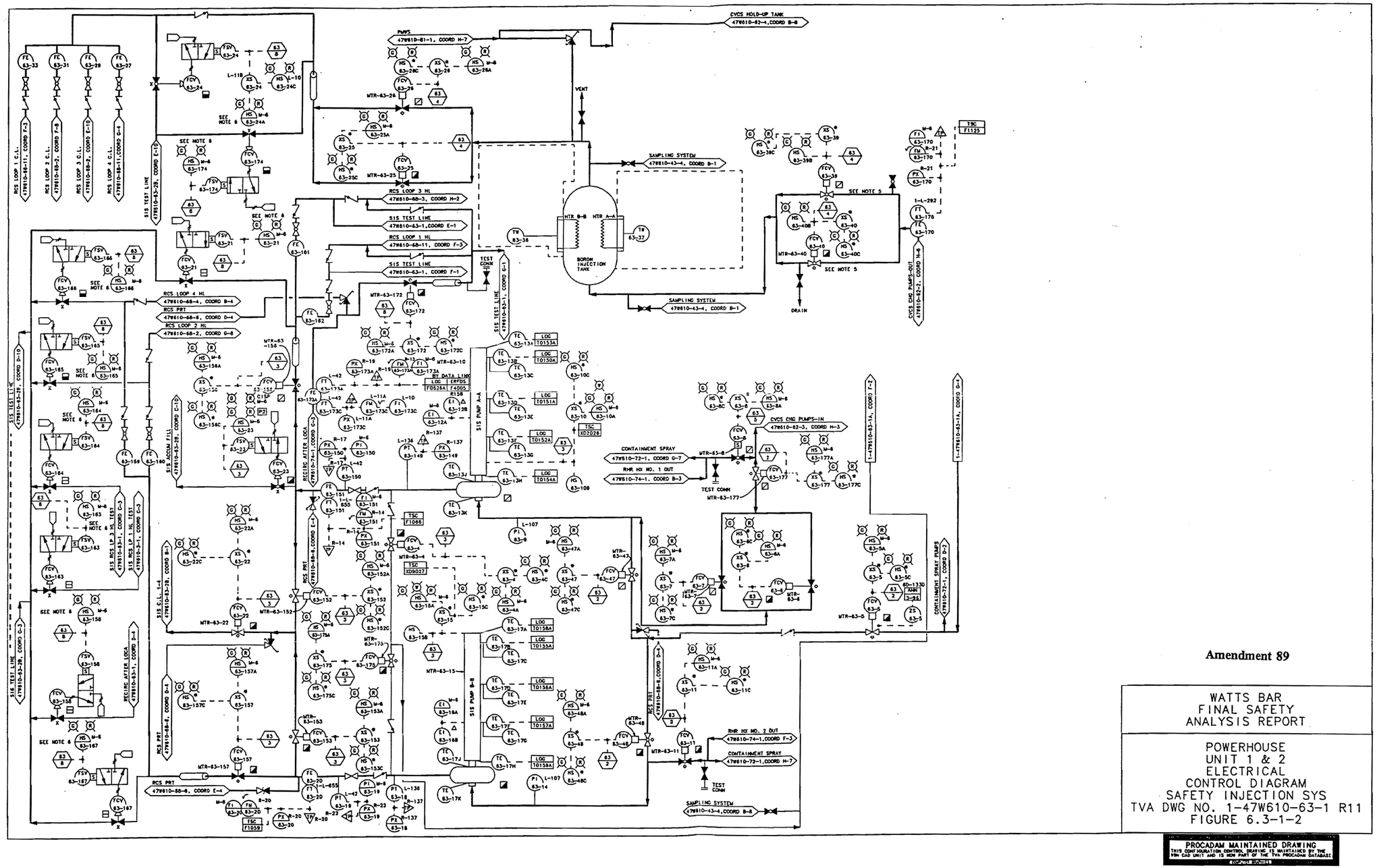

Figure 6.3-1-2 Powerhouse Unit 1 & 2 Electrical Control Diagram - Safety Injection System

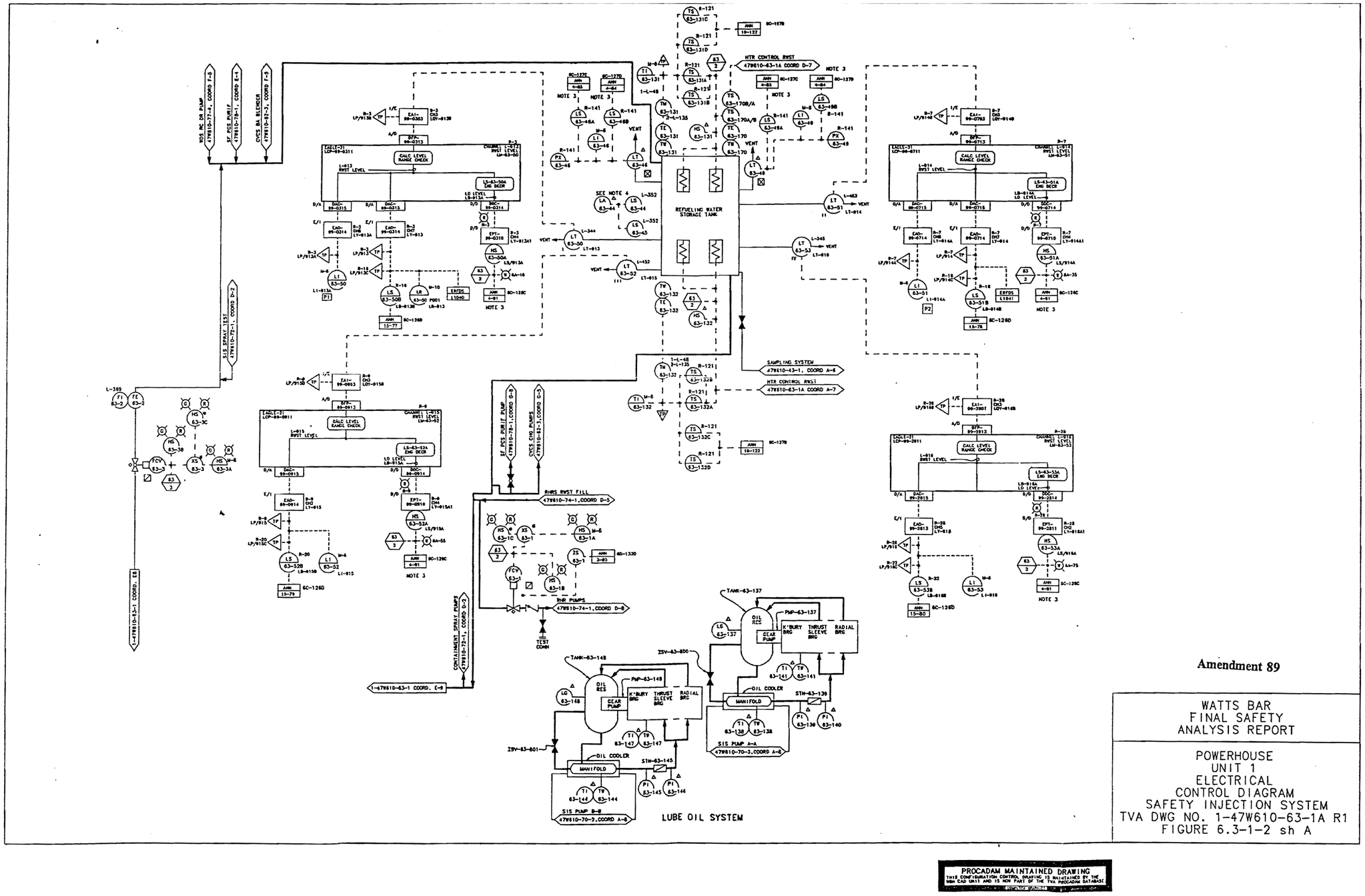

Figure 6.3-1-2-SH-A Powerhouse Unit 1 Electrical Control Diagram - Safety Injection System

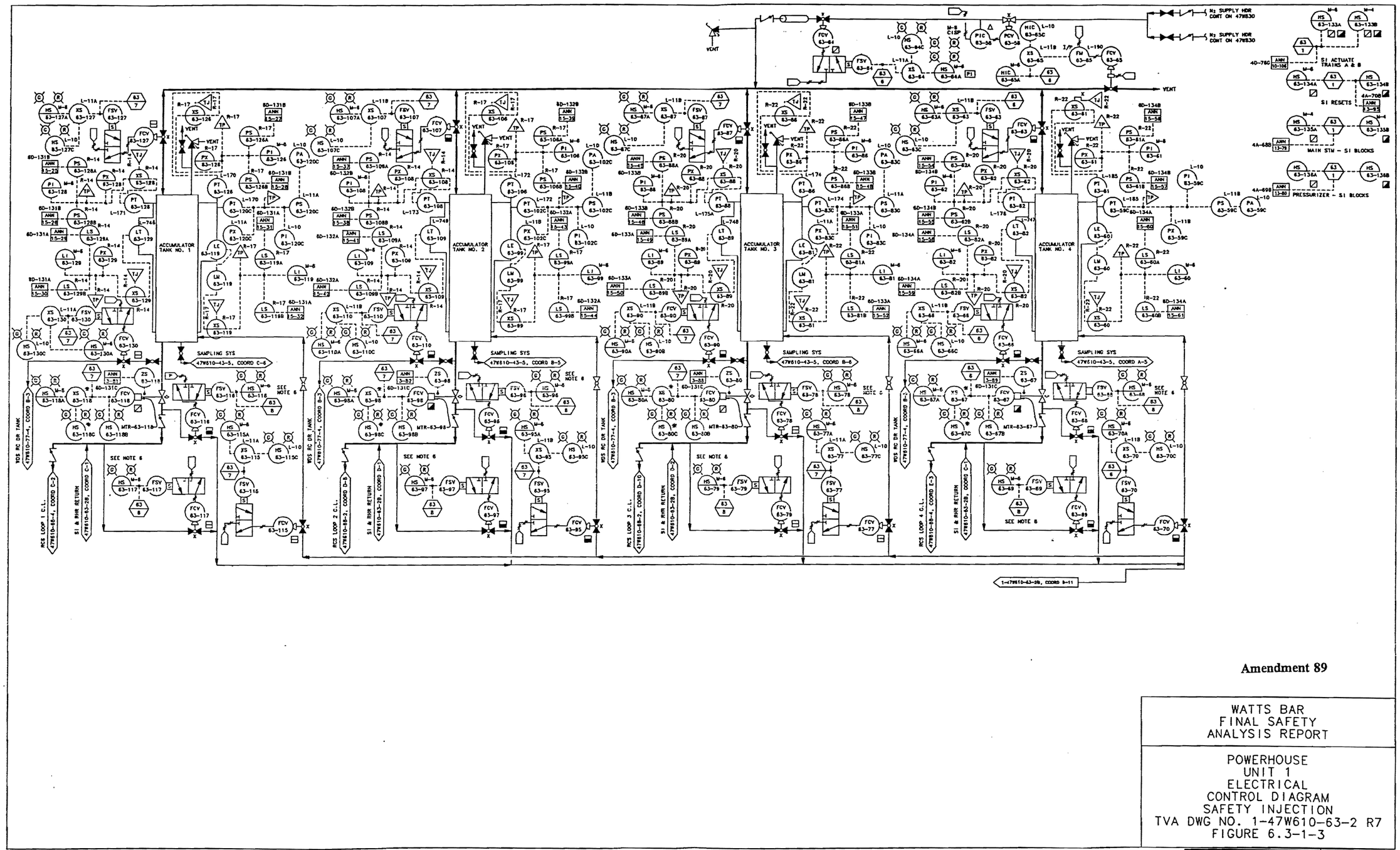

Amendment 89

WATTS BAR
FINAL SAFETY
ANALYSIS REPORT

POWERHOUSE
UNIT 1
ELECTRICAL
CONTROL DIAGRAM
SAFETY INJECTION
TVA DWG NO. 1-47W610-63-2 R7
FIGURE 6.3-1-3

PROCADAM MAINTAINED DRAWING
THIS CONFIGURATION CONTROL DRAWING IS MAINTAINED BY THE TVA CAD UNIT AND IS NOW PART OF THE TVA PROCADAM DATABASE

Figure 6.3-1-3 Powerhouse Unit 1 Electrical Control Diagram Safety Injection

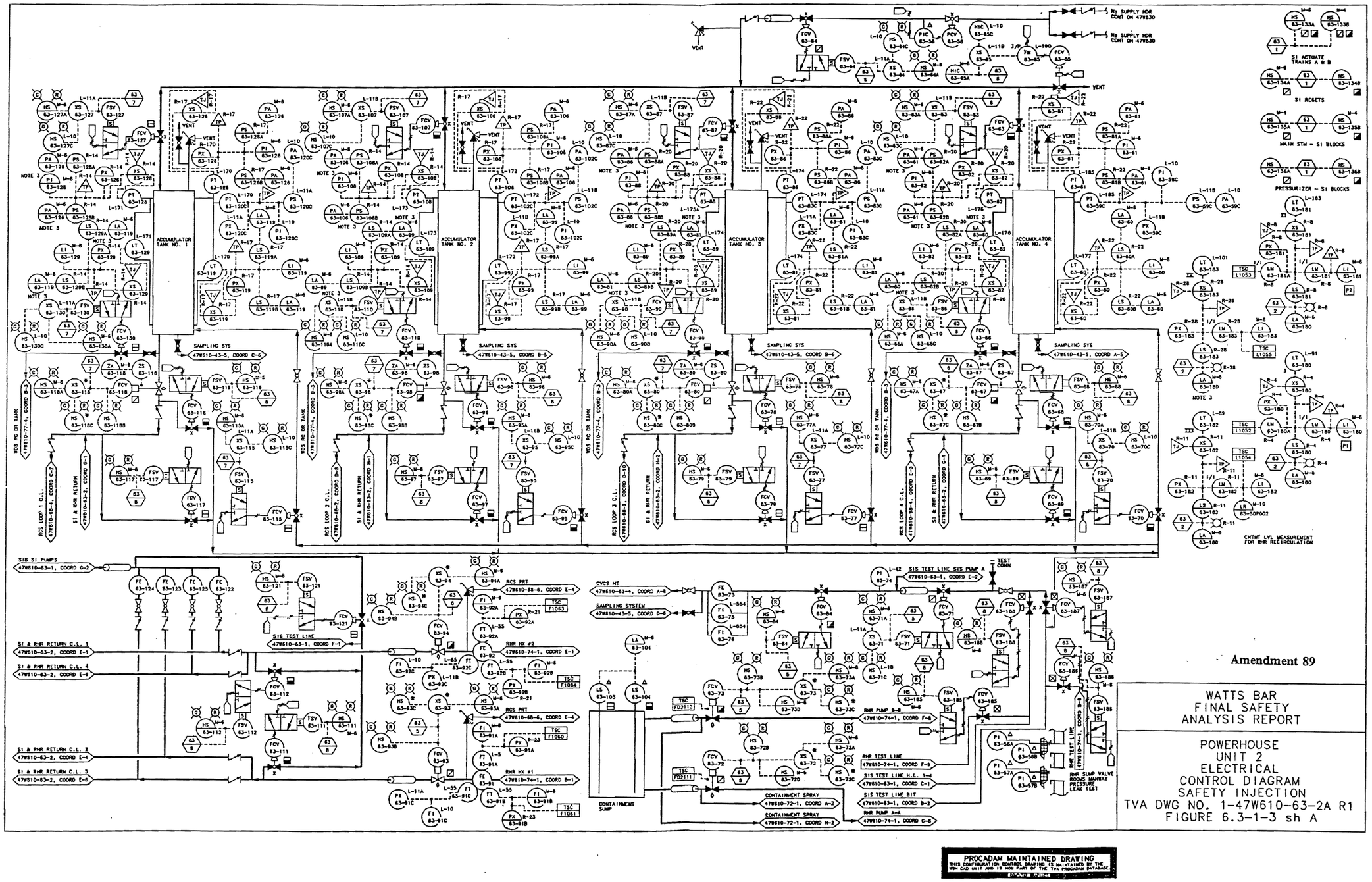

Figure 6.3-1-3-SH-A Powerhouse Unit 2 Electrical Control Diagram - Safety Injection

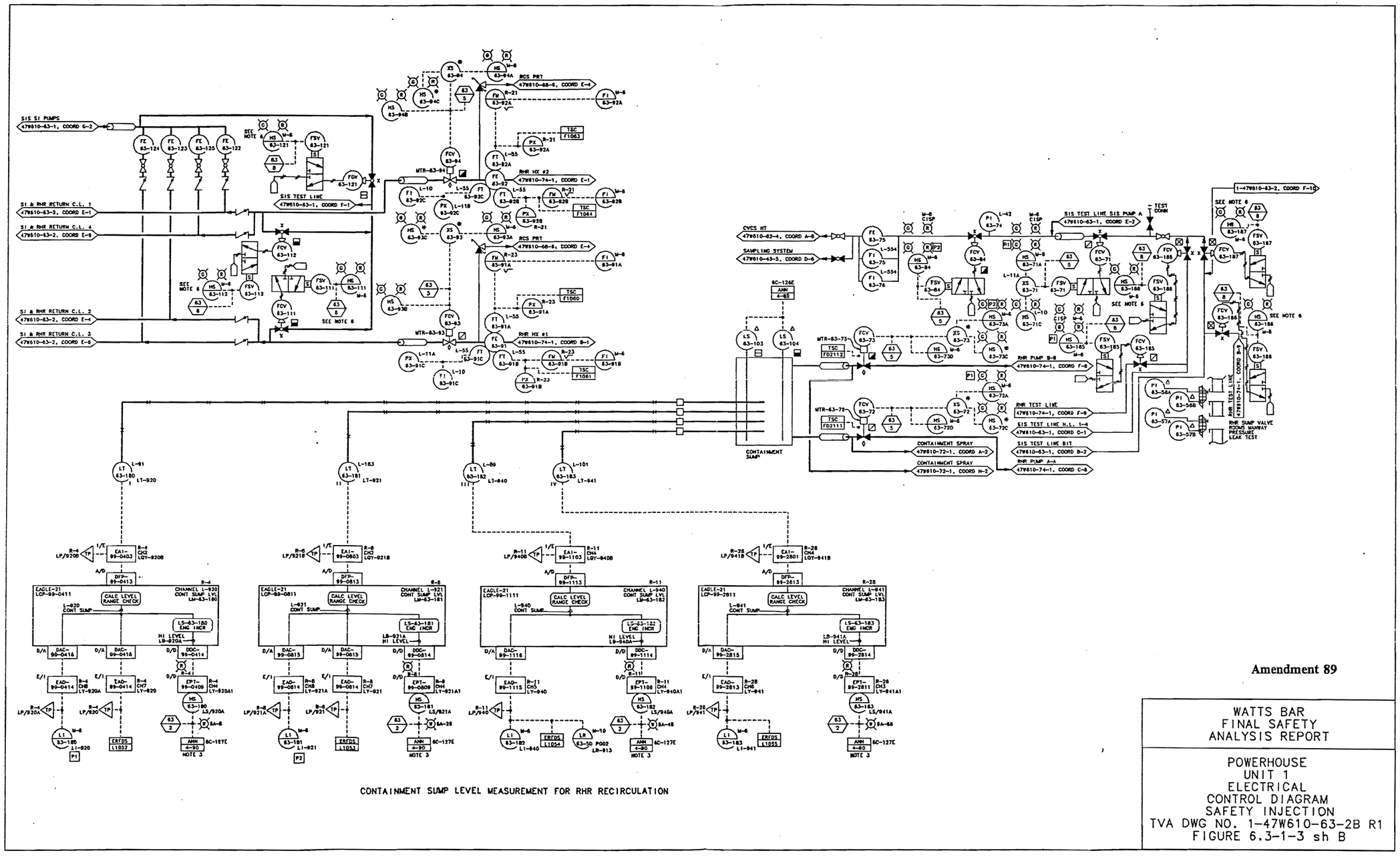

Figure 6.3-1-3-SH-B Powerhouse Unit 1 Electrical Control Diagram - Safety Injection

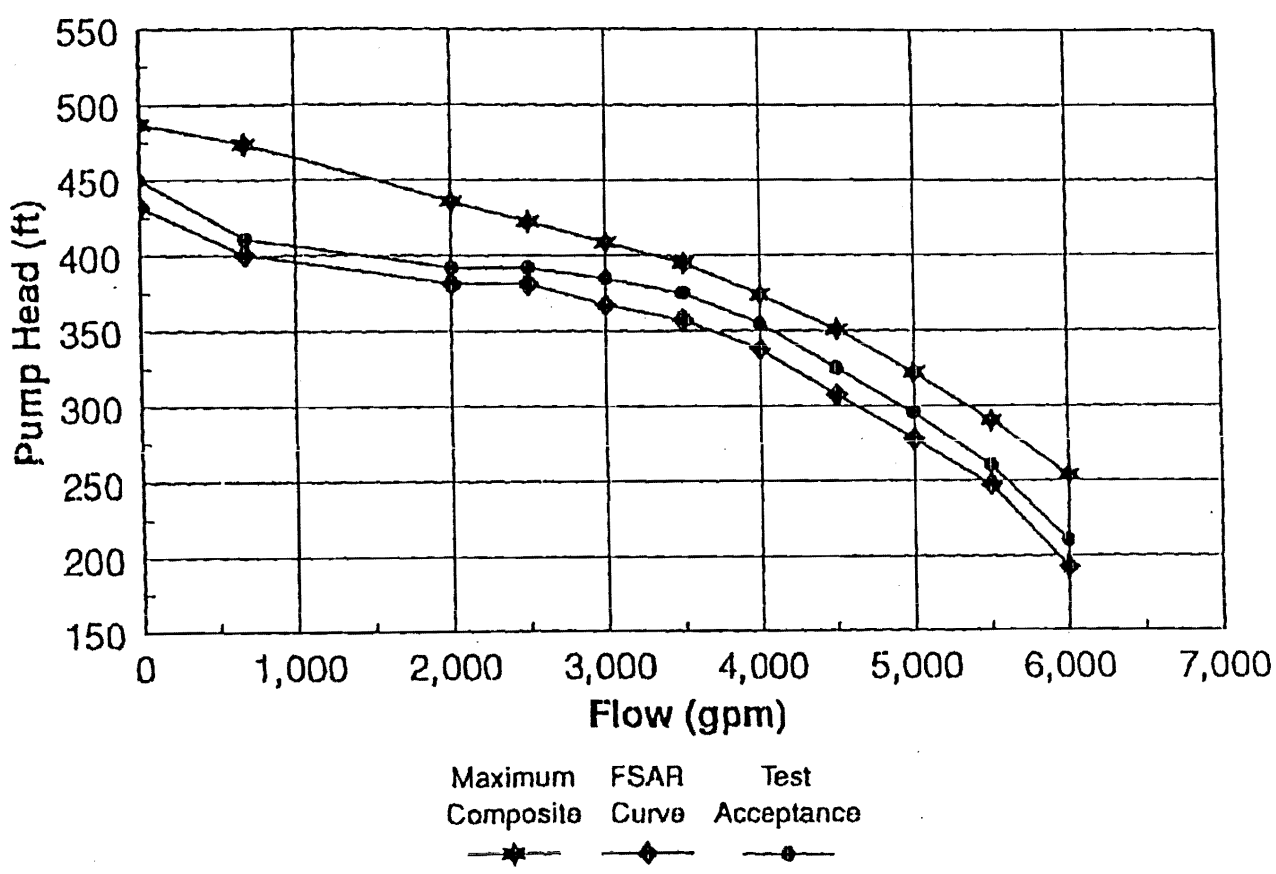

AMENDMENT '91

WATTS BAR NUCLEAR PLANT FINAL SAFETY ANALYSIS REPORT
PERFORMANCE CURVES FOR THE RESIDUAL HEAT REMOVAL PUMPS FIGURE 6.3-2

Figure 6.3-2 Performance Curves For The Residual Heat Removal Pumps

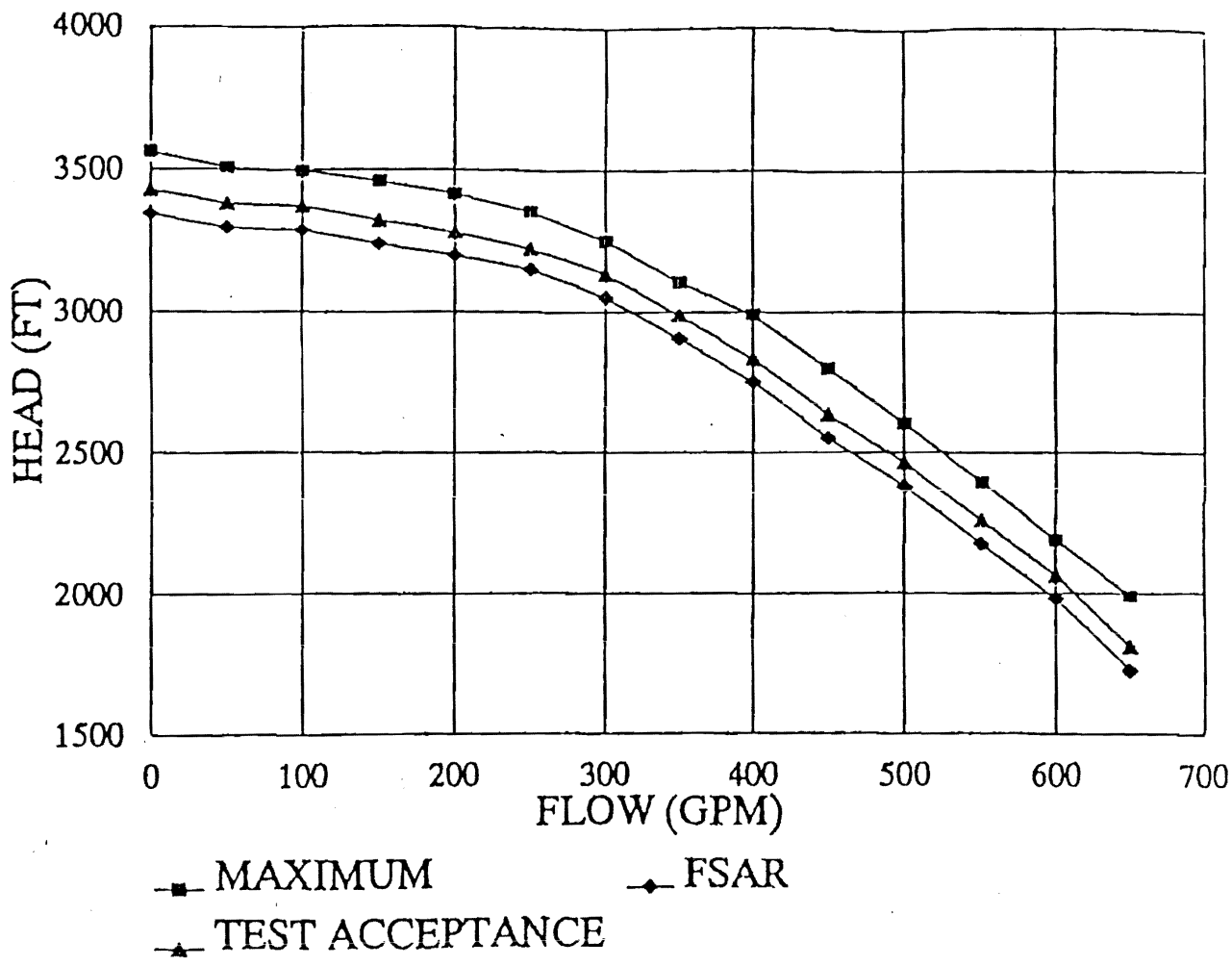

Amendment 89

WATTS BAR NUCLEAR PLANT
FINAL SAFETY
ANALYSIS REPORT

PERFORMANCE CURVES FOR
THE SAFETY INJECTION PUMPS
FIGURE 6.3-3

Figure 6.3-3 Performance Curves For The Safety Injection Pumps

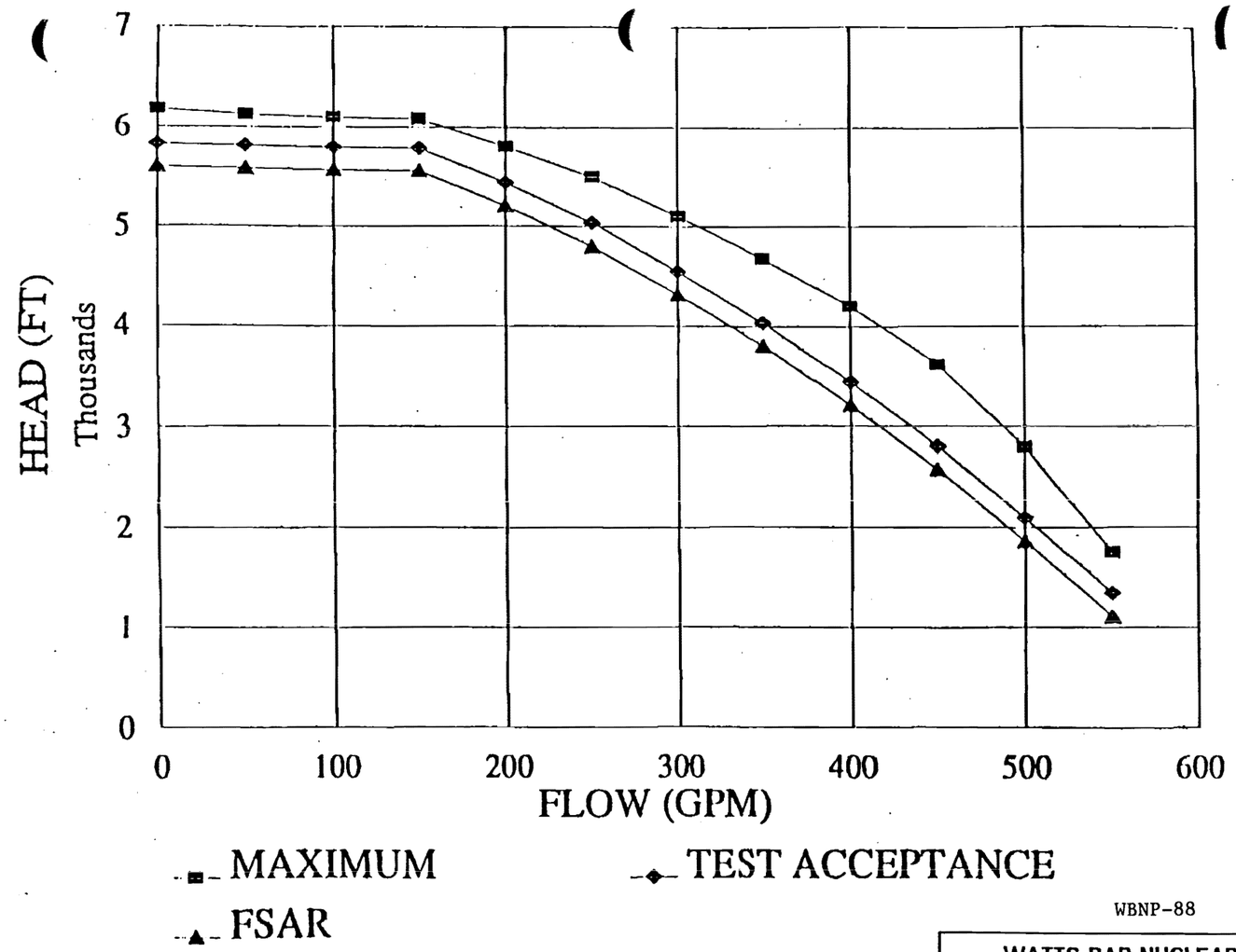

WBNP-88

WATTS BAR NUCLEAR PLANT FINAL SAFETY ANALYSIS REPORT
PERFORMANCE CURVES FOR THE CHARGING PUMPS FIGURE 6.3-4

Figure 6.3-4 Performance Curves For The Charging Pumps

Figure 6.3-5 Sheets 1 and 2, deleted by Amendment 63

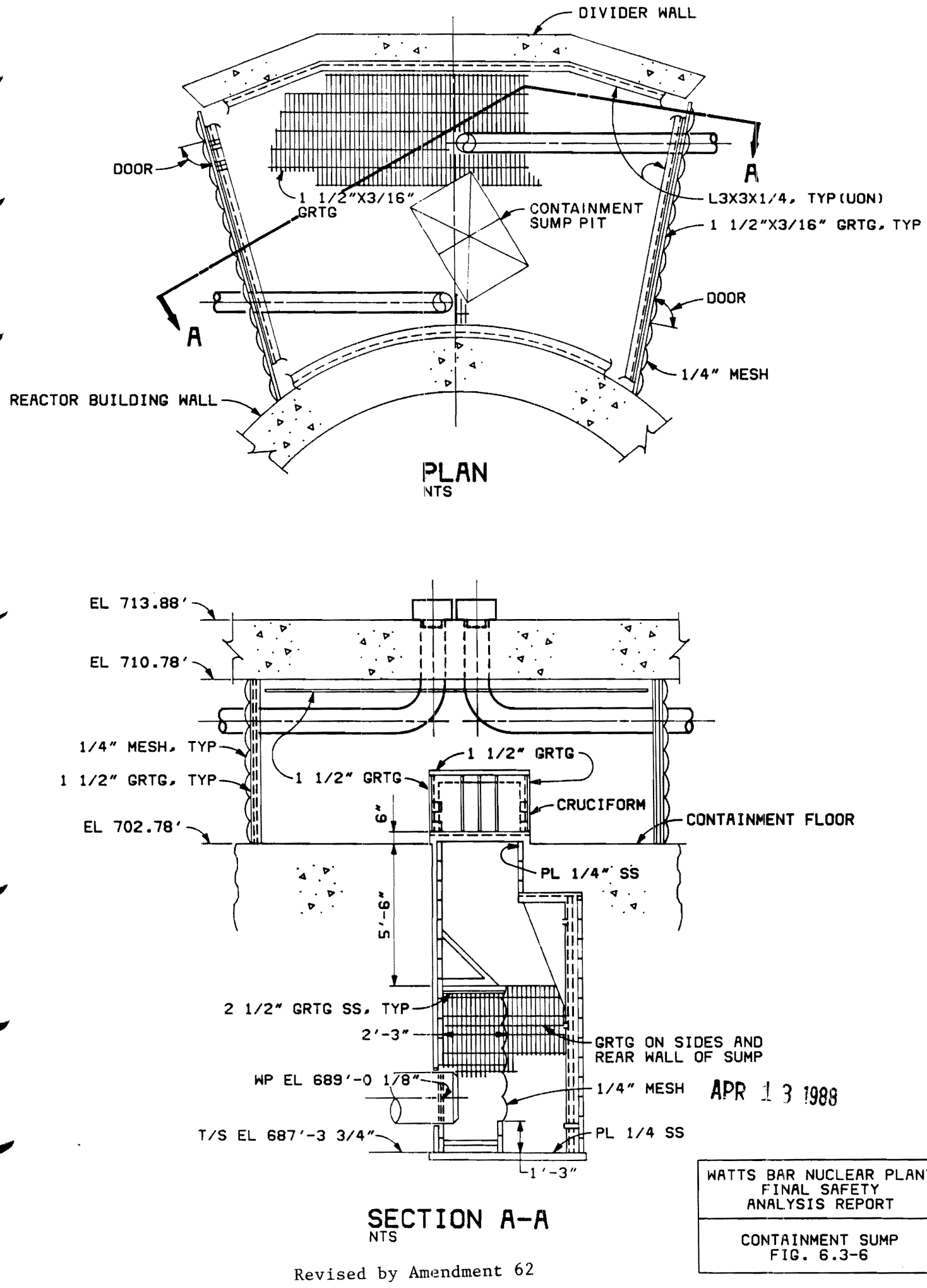

Revised by Amendment 62

Figure 6.3-6 Containment Sump

THIS PAGE INTENTIONALLY BLANK

6.4 HABITABILITY SYSTEMS

The Main Control Room Habitability System (MCRHS) is the set of equipment, components, supplies, and other features, including the building enclosure, provided to ensure that a suitable environment is maintained for personnel and equipment in the MCRHS area for safe, long-term occupancy during normal and emergency operations of the plant.

The Main Control Room Habitability Zone (MCRHZ) is the envelope of spaces which are maintained habitable by pressurization to 1/8 inch water gage minimum above atmospheric to minimize infiltration of airborne contaminants which may be present outside the pressure boundary. It is also called the MCRHS area.

6.4.1 Design Bases

Design bases of the system include:

(1) The capability to withstand the safe shutdown earthquake.

(2) The capability to continue to function properly following any single active failure.

(3) The capability to continue to function during such outside environmental conditions as the maximum possible flood or the design basis tornado.

(4) The capability to detect presence of smoke in the air intake and isolate the MCRHZ.

(5) The capability to shield MCR personnel from radiation sources and detect and limit the introduction of airborne radioactive contamination such that exposure of MCR personnel will not exceed limits specified in Appendix A to 10 CFR 50, General Design Criterion 19.

(6) The capability to permit safe shutdown of the plant from within the MCRHS area following an accident, including the design basis loss-of-coolant accident (LOCA).

6.4.2 System Design

6.4.2.1 Definition of MCRHS Area

The MCRHS area includes all rooms on plan Elevation 755 of the Control Building (refer to the equipment plans presented in Section 1.2). All rooms to which MCR personnel may require access during emergency operations are included within this envelope. The MCR requires continuous occupancy. Other rooms in the MCRHS area which may require less frequent access include the kitchen, toilet facilities, technical support center (TSC), NRC office, mechanical equipment room, offices, conference rooms, locker room, relay room, and DPSO shop.

All controls and displays necessary to bring the plant to a safe shutdown condition are included within the MCRHS area. Emergency food and water are provided as necessary during emergencies. Medical supplies are housed within the MCR. Toilet and kitchen facilities which may be required by MCR personnel are included also. Heating, ventilating, air conditioning, and air cleanup components to which access may be necessary are enclosed within the MCRHS area.

6.4.2.2 Ventilation System Design

The Control Building Heating, Ventilating, Air Conditioning, and Air Cleanup (HVACAC) System design is described in detail in Section 9.4.1. Flow diagrams, logic diagrams, control diagrams, and component data are also included in that section.

6.4.2.3 Leak Tightness

The flow rate necessary to maintain the MCRHS area at the required positive pressure is determined by the leakage characteristics of the MCRHS enclosure. The pressurization flow rate in emergency modes of operation is limited by the permissible dose set forth in 10 CFR 50, Appendix A, Criterion 19. Analyses indicate that if a pressurization flow rate in excess of 711 cfm is utilized, the dose to MCR personnel increases. Thus, a low leakage MCRHS enclosure is required.

Although no infiltration is expected from interfacing areas, an infiltration flow rate is calculated to conservatively determine the dose in the MCRHS area. The infiltration flow rate is limited by the permissible dose set forth in 10 CFR 50, Appendix A, Criterion 19. Analysis indicates that the calculated infiltration rate is acceptable.

The enclosure is formed by the:

(1) Monolithic reinforced concrete floor, walls and roof described in Section 3.8.4.

(2) Metal pressure barrier beneath each control room console.

(3) Low leakage seals for all electrical lines penetrating the enclosure.

(4) Low leakage doors and door seals.

(5) Low leakage ventilation system isolation dampers.

This enclosure is virtually insensitive to wind effects since only a small part of each end of the Control Building and the roof are exposed to the outside. Practically no Control Building penetrations exist on the building interfaces to the outside.

The walls, floors, and roof of the Control Building are of monolithic concrete construction. Few leakage paths exist in this type of construction.

Penetrations of the enclosure are provided with low leakage seals. Beneath each console in the MCR, a welded steel pressure barrier is provided. Electrical lines penetrating this barrier or any other portion of the MCRHS enclosure are provided with

low leakage seals to restrict exfiltration and infiltration. Doors and weather stripping with low leakage characteristics are installed in doorways which penetrate the MCRHS enclosure. In addition, dampers in ducts which interface areas adjacent to the MCRHS enclosure are provided with operators and low leakage seals to provide a positive barrier to exfiltration and infiltration.

A survey of potential leakage paths was conducted to ensure that the amount of exfiltration from the MCRHS area is small enough that the required emergency pressurization flow rate does not exceed the limiting value of 711 cfm. The potential leakage paths and the expected exfiltration via each path at a minimum MCRHS positive pressure of 1/8-inch w.g. (water gage) are summarized in Table 6.4-1 for each mode of MCRHS operation. Refer to Section 6.4.3 for a discussion of the operating modes of the MCRHS.

A survey of the infiltration leakage was taken to ensure that the MCRHS area dose would be within allowable limits. The potential and expected infiltration leakage for each path at 1/8-inch w.g. during the emergency mode is summarized in Table 6.4-2.

6.4.2.4 Interaction with Other Zones and Pressure-Containing Equipment

6.4.2.4.1 Other Ventilation Zones

Portions of the Auxiliary Building and Turbine Building are adjacent to the MCRHS area on the north and south sides respectively. In addition, the MCRHS area interfaces with other areas of the Control Building. There are few penetrations of the MCRHS enclosure except those entering the spreading room which is located directly below the MCRHS area. No adverse interaction that may enhance the transfer of toxic or radioactive gases into the MCRHS area is expected with any of these zones.

The north wall, i.e., q-line wall, of the MCRHS area separates the MCRHZ from the shutdown board rooms, the Elevation 757.0 floor of the Auxiliary Building. Elevation 757.0 of the Auxiliary Building is maintained at a slightly positive pressure during normal operation of the plant. This positive pressure does not exceed the positive pressure level maintained in the MCRHS area. During emergency operation initiated from a control room isolation (CRI) signal, the shutdown board room pressurizing air supply fans are automatically de-energized by the CRI. Therefore, no significant pressure differential will ever exist between this part of the Auxiliary Building and the MCRHS area which could promote migration of airborne radioactive contamination or toxic gases into the MCRHS area.

The south wall, i.e., the n-line wall, of the MCRHS area is adjacent to the Turbine Building. TheTurbine Building general ventilation system is not safety-related and is not designed to operate in an emergency. The Turbine Building will be maintained at atmospheric pressure during normal operation with a slight negative pressure being provided by the roof ventilators to induce outdoor air through louvers and dampers. Thus, no significant pressure differentials are expected which could overcome the outward-acting positive pressure maintained in the MCRHS areas.

The spreading room, at Elevation 729, is directly below the central portion of the MCRHS area. This room is normally maintained at a slightly negative pressure with respect to atmospheric pressure. Upon MCRHS area isolation, both the air supply and exhaust to this room are stopped. Isolation dampers are used to isolate the room from the outside. Therefore, the spreading room is at approximately atmospheric pressure, or slightly negative, so any leakage between the MCRHS area and the spreading room is exfiltration from the MCRHS area.

The areas at the east and west ends of the Control Building which are immediately below the MCRHS area are open to the Turbine Building and, therefore, are at the same pressure as the rest of the Turbine Building. As discussed previously, no adverse pressure differentials are expected in the Turbine Building.

6.4.2.4.2 Pressure-Containing Equipment

In general, pressure-containing equipment or piping is not permitted in the MCRHS area; except for several small hand-held fire extinguishers and self-contained breathing air apparatuses which are stored in the MCRHS area to provide for habitability during emergencies.

Zones interfacing with the MCRHS and which contain high-pressure equipment are portions of the Turbine Building and the areas at the east and west ends of the Control Building directly below the MCRHS area. These areas contain steam piping and feedwater lines and occasional transient compressed gas cylinders which may be brought in for maintenance activities.. No adverse pressure differentials are expected from failure of these lines since any significant differential pressure would result in rupture of the glass sections of the Turbine Building walls and all common walls and floor between the two buildings are seismic Category I with sealed penetrations. Areas of the Auxiliary Building which contain high-pressure equipment have no direct interface with the MCRHS area.

6.4.2.5 Shielding Design

Refer to Section 12.3.2.

6.4.2.6 Control Room Emergency Provisions

The MCRHS Area is designed for long-term occupation by personnel required during emergency operation. Supplies and emergency equipment are stored in the habitability area, except that operator protective clothing is stored in the operations support center, medical supplies are available from the medical emergency response team, and food is made available from off-site sources by the emergency control center.

6.4.2.7 MCRHS Fire Protection

The Fire Protection System is described in Section 9.5.1.

6.4.3 System Operational Procedures

The MCRHS operates in one of three modes to maintain the internal environmental conditions commensurate with outside conditions. The three operating modes are the normal mode, the emergency mode, and the extreme emergency mode.

Normal Mode

In the normal operations mode, all doors into the MCRHS area are normally closed and are used only for necessary ingress and egress during which the air handling unit fans provide outside air to the MCRHS area. Since airflow is balanced in conjunction with air outflow from the MCR and adjacent rooms, the pressure in this area remains positive. Balancing dampers are provided to keep the MCRHZ pressure at a minimum of 1/8 inch water gage above outside atmosphere and adjacent areas. The positive pressure in the MCRHZ with respect to the surrounding areas is monitored and alarmed in the MCR. Upon receipt of an abnormal indication, the MCR operator will take corrective action to reestablish the required differential pressure.

Emergency Mode

The emergency operations mode is utilized for any condition requiring MCRHS isolation. Isolation of the MCRHS area occurs automatically upon the actuation of a safety injection signal from either reactor unit or upon indication of high radiation, or smoke concentrations in the outside air supply stream to the building. Isolation of the MCRHS area may also be accomplished manually at any time by the control room operators.

Upon receipt of a signal for MCRHS isolation, the following conditions directly affecting the MCRHS are implemented automatically:

(1) Both Control Building emergency air cleanup fans operate to recirculate a portion of the control room air conditioning system return air through the cleanup trains composed of HEPA filters and charcoal adsorbers. One of the emergency air cleanup fans is subsequently placed in the standby mode by the operator.

(2) Both Control Building emergency pressurizing air supply fans operate to supply a reduced stream of outside air to the MCR air conditioning system to keep the MCRHS area pressurized, relative to the outdoors and adjacent areas, thereby minimizing the inleakage of unprocessed or contaminated air. This fresh air is routed through the emergency air cleanup trains. One of the two emergency pressurizing fans (and its associated emergency air intake) is subsequently placed in the standby mode by the operator.

(3) The exhaust fan in the toilet rooms is stopped and double isolation dampers are closed to prevent the inflow of unfiltered outside air to the MCRHS area.

(4) The shutdown board rooms pressurizing air supply fans in the Auxiliary Building Elevation 757.0 are automatically de-energized.

In addition, the following conditions which normally can indirectly affect the MCRHS are automatically implemented:

(1) The spreading room supply and exhaust fans are stopped and the operating battery room exhaust fan continues to run.

(2) Double isolation dampers in the spreading room supply duct and a single isolation damper in the exhaust duct will close to prevent infiltration of outside air to the spreading room.

(3) The normal operating electric board room air handling units continue to supply the same outside air quantity to the Control Building lower floors.

(4) Automatic isolation valves close to stop the flow of unfiltered pressurizing air to the MCRHS.

In the emergency mode, determination of the appropriate emergency pressurizing fan to place in standby is based on the operator's judgement.

The operator has the capability to compare radiation levels at the two emergency air intakes, as described under the extreme emergency operating mode below.

In the emergency operations mode, ingress and egress in the MCRHS area is administratively restricted to essential movement and takes place through one of the designated entryways on the Elevation 755 level. During this mode, a maximum of 711 cfm of outside air is drawn in and mixed with 3289 cfm of recirculated air, drawn through an air cleanup unit, and processed in the MCR air handling unit for proper humidity and temperature levels. In this mode, air leakage resistance from the MCRHS area will assure the maintenance of a minimum 1/8-inch w.g. positive pressure in the MCR habitability zone with the doors closed. Such a capability is demonstrated during preoperational test and periodically thereafter.

Extreme Emergency Mode

The Control Building outside air intakes are provided with radiation monitors that indicate and annunciate in the MCR. This instrumentation allows the operator to compare radiation levels at the two emergency air intakes and select the less contaminated intake for operation during emergency conditions. If the intake monitors indicate that extremely high air contamination levels exist outside (e.g., post-LOCA conditions approaching Regulatory Guide 1.4 releases which prohibit outdoor movement), the air intake having the lower contamination level is chosen and the extreme emergency operations mode is utilized. It is not required, however, from a dose standpoint, that the less contaminated air intake be chosen initially (see Section 15.5).

During the extreme emergency operations mode, necessary ingress and egress is restricted to just one entryway on Elevation 755. All other doors from the MCRHS area are sealed with heavy tape to reduce the outleakage from the MCRHS area. Such a practice reduces air leakage through the doorjamb seals. This procedure provides a

greater leakage margin during critical periods of the emergency and maintains the entire MCRHS area above the minimum 1/8 inch w.g. positive pressure.

The restricted ingress or egress under control room operator surveillance for all emergency modes minimizes the unfiltered airflow into the MCRHZ to approximately 10 cfm.

The basis for this position is that during this brief period when the door is open the air flow will be from inside the MCRHS area to the outside. Since the pressure will never be less than atmospheric in the MCRHS area during this interval, little contamination is expected to leak into the MCRHS area. In such circumstances the makeup air input of 711 cfm to the MCRHS area is considered sufficient to prevent unfiltered air infiltration into the MCRHS area.

6.4.4 Design Evaluations

6.4.4.1 Radiological Protection

Refer to Section 12.3.

6.4.4.2 Toxic Gas Protection

The evaluation of MCR habitability included consideration of possible hazards created by accidental release of potentially toxic chemicals. The evaluation considered chemicals stored both onsite and offsite within a 5-mile radius. Possible shipments of toxic chemicals by barge, rail, or road routes within a 5-mile radius were also considered.

Watts Bar Steam Plant is an offsite storage location for potentially hazardous chemicals within the 5-mile radius considered. Chemicals stored at the steam plant include acetone, anhydrous ammonia, carbon dioxide, methanol, nitrogen, sulfuric acid, isopropyl alcohol, calcium oxide, bentonite, soda ash, salt (NaCl), sodium sulfite, dichlorodifluoromethane, freon, acetylene, and sodium hypochlorite. However, only very small quantities of the chemicals, excluding carbon dioxide and nitrogen, are stored at the steam plant. Since nitrogen and carbon dioxide are asphyxiants and large concentrations of these chemicals are required to create a hazard, and since only small quantities are stored, which are bounded by the on-site quantities, no hazard to MCR personnel at Watts Bar Nuclear Plant is foreseen.

The potable water supply is obtained from the Watts Bar Utility District located on State Route 68 approximately two miles from Watts Bar Nuclear Plant. The utility maintains a relatively small inventory of chlorine for use in the treatment process. However, this quantity is less than the quantity requiring analysis per Regulatory Guide 1.78 and is not a hazard to MCR operators.

The only known shipments of potentially toxic chemicals transported past the site by road route are the small quantities of chemicals shipped to Watts Bar Steam Plant as discussed above. These are transported via State Route 68 which passes within 1 mile of Watts Bar Nuclear Plant. The frequency of shipment is less than the guideline value given in NRC Regulatory Guide 1.78 for all of the chemicals except carbon

dioxide and nitrogen. The quantity of each shipment is small for all of the chemicals. Therefore, no hazard to MCR personnel is expected.

The only rail line within a five-mile radius is the spur track which serves the plant itself. Any chemicals transported to the site were evaluated as stored on site. Barge traffic passing the plant site is discussed in Section 2.2.2.2. Release of these commodities does not result in introduction of toxic gases to the MCRHS area. The shipments are not considered to pose a hazard toMCR personnel unless smoke generated by a barge fire should be blown toward the Control Building air intake. If this should occur, however, ionization-type smoke detectors in the intakes initiate MCRHS isolation and preclude entrance of combustion products into the MCRHS area. The small amount of smoke which could possibly enter the area prior to isolation is quickly removed by the air cleanup units. Therefore, MCR habitability is not degraded by accidents involving these products.

Chemicals stored on site which may be potentially hazardous to MCR personnel include, but are not limited to, argon, carbon dioxide, ammonium hydroxide, hydrazine, glutaraldehyde, freons, hydrogen, nitrogen, sodium hypochlorite, ethanolamine and commercially compounded chemicals used to treat the water systems. It was determined that the remaining chemicals do not constitute a hazard to control room personnel since they are stored in small quantities, are liquids with low vapor pressures at normal temperatures or are stored as solids.

Analysis was performed for the potentially hazardous chemicals utilizing the approach outlined in NRC Regulatory Guide 1.78, "Assumptions for Evaluating the Habitability of a Nuclear Power Plant Control Room During A Postulated Hazardous Chemical Release." Major assumptions included Pasquill stability Class G and adverse wind direction. Wind speed was selected as 1 meter per second based on Regulatory Guide 1.4, "Assumptions Used for Evaluating the Radiological Consequences of a Loss of Coolant Accident for Pressurized Water Reactors."

A 24-ton capacity carbon dioxide tank is located in the yard approximately 40 feet from the east end of the Control Building. Analysis indicated that upon a carbon dioxide release, the maximum concentration in the control room would be less than the 1% maximum per Regulatory Guide 1.78.

Ammonium hydroxide and hydrazine are stored in the Turbine Building in 625 gallon and 250 gallon tanks, respectively. Upon a spill of either of these tanks, most of the liquid would drain into the Turbine Building sump and any vapors given off would be dispersed by the Turbine Building ventilation system. Analysis for the ammonium hydroxide, which has a significantly higher vapor pressure than hydrazine, shows that the control room would not become uninhabitable due to ammonia vapors drawn in from outside.

Potential releases of ethanolamine, used for steam generator corrosion control and glutaraldehyde, used as a biocide in the component cooling water system, were also analyzed and determined to have no affect on the MCR.

Sodium hypochlorite may be stored in the Sodium Hypochlorite Building. The solution has a pH of 11-13 at this concentration. In order for chlorine to form upon a spill, the pH would have to be lowered to about a pH of 4. Since no acidic solutions are present to cause this reduction in pH, no chlorine would be given off, any liquid would be contained within the Sodium Hypochlorite Building, and any vapors would be dispersed by the building ventilation system.

Chemical compounds injected near the Intake Pump Station and used to treat the raw water systems on site were similarly evaluated for potential affects on control room habitability. Analysis confirmed that subsequent to a release of the chemical tank contents, potential control room concentrations of these chemicals were within acceptable limits.

Hydrogen is stored in 54,800 scf tanks at the hydrogen trailers south of the switchyard, and nitrogen is stored in a 286,900 scf tank in the yard east of the Control Building. Analysis has shown that gases drawn into the control room from these tanks would not prevent maintaining an oxygen level above 20%, which meets a 19.5% safe oxygen level. Likewise, analysis has shown that this safe oxygen level would not be affected by a release of refrigerant R-11, R-12, or R-22 used in air-conditioning systems, or freon 1301, as used in some fire extinguishing systems on site.

It was therefore concluded that no hazard to control room habitability is posed by any of the chemicals stored on site, offsite within a 5-mile radius, or transported by the site by barge, rail, or road within a 5-mile radius.

6.4.5 Testing and Inspection

Tests and inspections conducted on the MCR habitability system are mainly concerned with the HVACAC system, the capability to keep a positive pressure within the MCRHS area, and the operation of the airborne hazards monitors. The scope includes preoperational and periodic tests. The preoperational tests objectives are identified in Chapter 14.0.

6.4.6 Instrumentation Requirements

Several kinds of instrumentation are utilized in the MCRHS. Beta radiation sensors and smoke monitors are installed in the makeup air intake duct to detect harmful concentrations of these airborne hazards. Thermostats and humidistats are positioned in the MCR to control HVACAC system operations. Static pressure differential sensors are installed in the air cleanup units to measure the pressure change across each air purification element bank. Temperature sensors are utilized for duct heater element control to keep the incoming air above specified limits. Flow sensors are installed downstream from each MCR air handling unit to sense the presence of substandard air flows and initiate startup of the standby redundant HVACAC train. Differential pressure transmitters sense the pressure in the MCRHZ with respect to the adjacent areas and differential pressure switches in the transmitter instrument loop alarm on low pressure. During control room isolation, these switches also start the standby air cleanup unit and associated emergency pressurization system on low differential pressure.

Instrumentation details of the control room HVAC system are provided in Section 9.4.1. General descriptions of safety related plant instrumentation are provided in Section 7.1. The detailed instrumentation drawings of the control room HVAC system are listed in Table 1.7-1.

REFERENCES

None

Table 6.4-1 Air Leakage (Exfiltration) Paths In The Watts Bar MCRHS Area Control Room

Leakage Path	Flow Rate(4) (cfm)		
	Normal Operation Mode	Emergency Mode	Extreme Emergency Mode
Doors	215.1	215.1	215.1(6)
Toilet Damper	825(1)	9.7	9.7
Spreading Room Dampers	1200(1)	16.5	16.5
Other Dampers	3.1	3.1	3.1
Penetrations (electrical, piping, and ducts)	0.1	0.1	0.1
Concrete Walls, Floor, and Roof	0.2	0.2	0.2
Duct Leakage (to outside of MCRHS)	24.4	24.4	24.4
Total(2)	2267.9	269.1	269.1(6)
Air Intake.(3) maximum	3200(5)	711	711
Net Excess Capacity	932.1	441.9	441.9

Notes:

1 During normal operation, this flow path is normally open.

2 If the toilet exhaust fan or the spreading room supply fan fails to shut down during emergency mode concurrent with isolation damper failing open, a maximum of 24 cfm additional out-leakage may occur.

3 During both emergency modes, the ventilation supply is isolated with butterfly valves.

4 All numbers rounded to the nearest tenth.

5) Flowrate is conservative since the values, recorded during properational tests while maintaining +1/8” w.g. pressure in the MCR, were smaller.

6) Doors will be taped; therefore, the leakage is conservatively stated.

Table 6.4-2 Air Leakage (Infiltration) Paths In The Watts Bar Mcrhs Area Control Room

Leakage Path	Flow Rate (cfm)
Door into Turbine Building (for egress/ingress)	10.0(1)
Emergency Pressurizing System Discharge Duct	0(3)
Control Air for Fire Protection	2.0
Pneumatically Operated Dampers and Valves	24.0(2)
Pneumatically Operated Instruments	1.0
Normal Pressurizing Duct	0(3)
Battery Room Exhaust	1.8
Safety Margin	36.2
Total	75.0
Initial Use of Pneumatic Valves and Dampers	24.0
Steady-State Total	51.0

Notes:

1 To account for the possible increase in air exchange due to ingress or egress, an additional 10 cfm was added.

2 Initially, the pneumatic dampers and valves release air into the MCRHS area; after dampers and valves are set, they are no longer used.

3 These ducts are under negative pressure; therefore, leakage will be out of the MCRHS.

6.5 FISSION PRODUCT REMOVAL AND CONTROL SYSTEMS

6.5.1 Engineered Safety Feature (ESF) Filter Systems

Four Engineered Safety Feature (ESF) air cleanup systems' units are provided for fission product removal in post-accident environments. These are:

(1) The emergency gas treatment system (EGTS) air cleanup units.

(2) The AuxiliaryBuilding gas treatment system (ABGTS) air cleanup units.

(3) The Reactor Building purge system air cleanup units.

(4) The Main ControlRoom emergency air cleanup units.

6.5.1.1 Design Bases

6.5.1.1.1 Emergency Gas Treatment System Air Cleanup Units

The design bases are:

(1) To provide fission product removal capabilities sufficient to keep radioactivity levels in the Shield Building annulus air released to the environs during a DBA LOCA sufficiently low to assure compliance with 10 CFR 100 guidelines.

(2) These air cleanup units are a part of the EGTS. See Section 6.2.3.1.2 for the design bases for other portions of this system.

6.5.1.1.2 Auxiliary Building Gas Treatment System Air Cleanup Units

The design bases are:

(1) To provide fission product removal capabilities sufficient to keep radioactivity levels in the Auxiliary Building secondary containment enclosure (ABSCE) air released to the environs during a postulated accident sufficiently low to assure compliance with 10 CFR 100 guidelines.

(2) These air cleanup units are a part of the ABGTS. See Section 6.2.3.1.3 for the design basis for other portions of this system.

6.5.1.1.3 Reactor Building Purge Air System Air Cleanup Units

The design bases are:

(1) To provide fission product removal capabilities sufficient to keep radioactivity levels in the primary containment air released to the environs following a fuel handling accident within the containment sufficiently low to assure compliance with 10 CFR 100 guidelines.

(2) These air cleanup units are a part of the Reactor Building purge air system. See Section 9.4.6.1 for the design basis for other portions of this system.

6.5.1.1.4 Main Control Room Emergency Air Cleanup Units

The design bases are:

(1) To provide air purification capabilities sufficient to keep air purity levels in the main control room and adjoining areas defined in Section 6.4 within limits needed to satisfy Criterion 19 of 10 CFR 50, Appendix A.

(2) These air cleanup units are a part of the Main Control RoomHabitability System (MCRHS) area HVAC system. See Section 9.4.1.1 for the design bases for other portions of this system.

6.5.1.2 System Design

6.5.1.2.1 Emergency Gas Treatment System Air Cleanup Units

The air cleanup units are a part of the air cleaning subsystems of the EGTS. See Section 6.2.3.2.2 for a description of the system design of the air cleanup subsystem, and the function, operation and control of the air cleanup units within that system.

The rated capacity of each redundant air cleanup unit in the subsystem is 4000 cfm. Both units are located in the EGTS room on Elevation 757. They are adjacent to each other, but separated by a concrete barrier wall.

The air cleanup units are steel housings containing air treatment equipment, samples, heaters, a drain, test fittings, and access facilities for maintenance. The air treatment equipment within the housing includes a demister, relative humidity heater, prefilter bank, HEPA filter bank, two banks of carbon adsorbers in series and another HEPA filter bank. These components are installed in the order listed.

The housing incorporates a quench-type water supply and drain system for flooding the carbon in case of fire. A drain is also incorporated into the housing adjacent to the demister installation to allow moisture separated from the air stream to flow by gravity to a water collection tank in the Auxiliary Building. Integral to this housing are test fittings properly sized and positioned to permit orderly and efficient testing of the HEPA filter and carbon adsorber banks.

The relative humidity heater installed in the air cleanup units is an electric heater designed to heat the incoming air sufficiently to reduce the relative humidity of saturated air to 70%. Included in this installation is a temperature limiting controller that will shut the heater off if excessive temperatures are detected.

The HEPA filters are 1000 cfm capacity units designed to remove at least 99.97% of the particulates greater than 0.3 micron in diameter, and meet the requirements of military specification MIL-F-51068. The carbon adsorbers are Type II unit trays, fabricated in accordance with AACC Standard CS-8T requirements. AACC-CS-8T has been superseded; and ANSI/ASME-N509-989 specifies ASME AG-1-1988 to be used.

Therefore, all new charcoal Type II cells shall meet AG-1, Section FD, with the exception that the 1991 version of the code be used. Existing Type II cells do not have to be replaced to meet the AG-1 code if being refilled. New replacement charcoal adsorbent (for use in new and refilled Type II cells) shall be procured to meet the ASME AG-1-1991 requirements in lieu of the 1988 version (or later version, provided proper evaluation justifies adequacy), with the exception that laboratory testing of adsorbent be in accordance with ASTM D3803-1989.. These trays contain two-inch-thick impregnated carbon beds. Each bank of carbon adsorber trays typically contains one test type tray to facilitate periodic sampling of the carbon.

The total numbers of filters and adsorber unit trays provided in each air cleanup unit are listed in Table 6.5-5. Compliance of the design, testing, and maintenance features of the EGTS air cleanup units with Regulatory Guide 1.52 is tabulated in Table 6.5-1.

6.5.1.2.2 Auxiliary Building Gas Treatment System Air Cleanup Units

See Section 6.2.3.2.3 for a description of the system design of the ABGTS and the function, operation and control of the air cleanup units within that system.

The rated capacity of each redundant air cleanup unit in this gas treatment system is 9000 cfm. Each unit is located in a separate room, one adjacent to each reactor unit on Elevation 737.

Each of these air cleanup units is a steel housing equipped with air treatment components, samples, heaters, test fittings and access facilities for maintenance. The air treatment components within the housing include a demister, a relative humidity heater, prefilter bank, HEPA filter bank, two banks of carbon adsorbers in series, and another HEPA filter bank. This equipment is installed in the order listed. The housing incorporates a quench-type water supply and drain system for flooding the carbon in case of fire. A drain is also incorporated into the housing adjacent to the demister section to allow moisture separated from the air stream to flow by gravity to a water collection tank in the Auxiliary Building. Integral to the housing are test fittings properly sized and positioned to permit orderly and efficient testing of the HEPA filter and carbon adsorber banks.

The relative humidity heater installed in the air cleaning units is an electric heater designed to heat the incoming air sufficiently to reduce the relative humidity of saturated air to 70%. Included in this installation is a temperature limiting controller that shuts off the heater if excessive temperatures are detected.

The HEPA filters installed in the air cleanup units are 1000 cfm units designed to remove at least 99.97% of the particulates greater than 0.3 micron in diameter, and meet the requirements of military specification MIL-F-51068. The carbon adsorbers installed in the air cleanup units are Type II unit trays, fabricated in accordance with AACC Standard CS-8T requirements. AACC-CS-8T has been superseded; and, ANSI/ASME-N509-989 specifies ASME AG-1-1988 to be used. Therefore, all new charcoal Type II cells shall meet AG-1, Section FD, with the exception that the 1991 version of the code be used. Existing Type II cells do not have to be replaced to meet the AG-1 code if being refilled. New replacement charcoal adsorbent (for use in new

and refilled Type II cells) shall be procured to meet the ASME AG-1-1991 requirements in lieu of the 1988 version (or later version, provided proper evaluation justifies adequacy), with the exception that laboratory testing of adsorbent be in accordance with ASTM D3803-1989. The total numbers of filters and adsorber unit trays provided in each air cleanup unit are listed in Table 6.5-5.

Compliance of the design, testing, and maintenance features of the ABGTS air cleanup units with Regulatory Guide 1.52 is tabulated in Table 6.5-2.

6.5.1.2.3 Reactor Building Purge System Air Cleanup Units

See Section 9.4.6.2 for description of the system design of the Reactor Building purge system and the function, operation, and control of the air cleanup units within that system.

Two 50% capacity air cleanup units, designed to supply a total of 22,949 cfm (two fans together), are provided for each Reactor Building. Both units are located in the same room on Elevation 713 adjacent to the Reactor Building they serve.

Each air cleanup unit has a stainless steel housing equipped with air treatment components, samples, test fittings, and access facilities for maintenance. The air treatment components within the housing include a prefilter section, a HEPA filter bank, and a carbon filter bank. This equipment is installed in the order listed. Integral to the housing are test fittings properly sized and proportioned to permit orderly and efficient testing of the HEPA filter and carbon adsorber banks.

The HEPA filters installed in the air cleanup units are 1000 cfm units designed to remove at least 99.97% of the particulates greater than 0.3 microns in diameter. These filters are water- and fire-resistant units fabricated in accordance with MIL-F-51068C. The carbon adsorbers installed in the air cleanup units are Type II unit trays, fabricated in accordance with AACC Standard CS-8T, rated at 333 cfm each. The trays are installed in banks such that air flow velocity through the carbon bed is not more than 40 feet per minute. This results in a residence time of about 0.25 seconds. The total numbers of filters and adsorber unit trays provided in each air cleanup unit are listed in Table 6.5-5.

Compliance of the design, testing, and maintenance features of theReactorBuilding purge system air cleanup units with Regulatory Guide 1.52 is tabulated in Table 6.5-3.

6.5.1.2.4 Main Control Room Emergency Air Cleanup Units

See Section 9.4.1.2 for a description of the system design of the main control room emergency ventilation system and the function, operation and control of the emergency air cleanup units within that system.

Two 100% capacity air cleanup units, each rated at 4000 cfm, are provided for the control room. Both units are located in the mechanical-equipment room on Elevation 755.

Each of the air cleanup units has a stainless steel housing equipped with air treatment components, samples, test fittings and access facilities for maintenance. The air treatment components within the housing include a HEPA filter bank and a carbon adsorber bank, installed in the order listed. Integral to the housing are test fittings properly sized and proportioned to permit orderly and efficient testing of the HEPA filter and carbon adsorber banks. The HEPA filters utilized are 1000 cfm units designed to remove at least 99.97% of the particulates greater than 0.3 microns in diameterand meet the requirements of military specification MIL-F-51068. The carbon adsorbers installed in the housing are Type II unit trays fabricated in accordance with AACC Standard CS-8T requirements. AACC-CS-8T has been superseded; and, ANSI/ASME-N509-989 specifies ASME AG-1-1988 to be used. Therefore, all new charcoal Type II cells shall meet AG-1, Section FD, with the exception that the 1991 version of the code be used. Existing Type II cells do not have to be replaced to meet the AG-1 code if being refilled . New replacement charcoal adsorbent (for use in new and refilled Type II cells) shall be procured to meet the ASME AG-1-1991 requirements in lieu of the 1988 version (or later version, provided proper evaluation justifies adequacy), with the exception that laboratory testing of adsorbent be in accordance with ASTM D3803-1989. The total numbers of filters and adsorber unit trays provided in each air cleanup unit are listed in Table 6.5-5.

Compliance of the design, testing, and maintenance features of the main control room emergency air cleanup units with Regulatory Guide 1.52 is tabulated in Table 6.5-4.

6.5.1.3 Design Evaluation

6.5.1.3.1 Emergency Gas Treatment System Air Cleanup Units

See Section 6.2.3.3.2.

6.5.1.3.2 Auxiliary Building Gas Treatment System Air Cleanup Units

See Section 6.2.3.3.3.

6.5.1.3.3 Reactor Building Purge System Air Cleanup Units

See Section 9.4.6.3.

6.5.1.3.4 Main Control Room Emergency Air Cleanup Units

See Section 6.4.4.

6.5.1.4 Tests and Inspections

6.5.1.4.1 Emergency Gas Treatment System Air Cleanup Units

Preoperational testing of the EGTS air cleanup units to applicable Regulatory Guide 1.52 requirements, as listed in Table 6.5-1, is conducted to verify the units leak tightness, HEPA and carbon adsorber bank efficiencies, and heater operation. Included in the testing scope are functional tests on all cleanup unit instrumentation, alarms, and data displays. Preoperational test requirements and acceptance criteria are addressed in Chapter 14.

Periodic testing in accordance with the Technical Specifications assures continued satisfactory performance of the units. See Section 6.2.3.4.1 for testing and inspection procedures for other portions of the EGTS.

6.5.1.4.2 Auxiliary Building Gas Treatment System Air Cleanup Units

Preoperational testing of the ABGTS air cleanup units to applicable Regulatory Guide 1.52 requirements, as listed in Table 6.5-2, is conducted to verify the units leak tightness, HEPA and carbon adsorber bank efficiencies and heater performances. Included in the testing scope are functional tests on all cleanup units instrumentation, alarm, and data displays. Preoperational test requirements and acceptance criteria are addressed in Chapter 14.

Periodic testing in accordance with the Technical Specifications assures continued satisfactory performance of the units. See Section 6.2.3.4.2 for testing and inspection of other portions of the ABGTS.

6.5.1.4.3 Reactor Building Purge System Air Cleanup Units

See Section 9.4.6.4.

6.5.1.4.4 Main Control Room Emergency Air Cleanup Units

Preoperational testing of the main control room emergency air cleanup units to applicable Regulatory Guide 1.52 requirements, as listed in Table 6.5-4, is conducted to verify the units leaktightness, and HEPA and carbon adsorber bank efficiencies. Included in the testing scope are functional tests on all cleanup units instrumentation, alarm, and data displays. Preoperational test requirements and acceptance criteria are addressed in Chapter 14.

Periodic testing in accordance with the Technical Specification assures continued satisfactory performance of the units. See Section 9.4.1.4 for testing and inspection of other portions of the Control Building HVAC system.

6.5.1.5 Instrumentation Requirements

6.5.1.5.1 Emergency Gas Treatment System Air Cleanup Units

Permanently installed pressure differential gauges across the prefilter, both HEPA filter banks, and both carbon adsorbers allow periodic surveillance of dust loadings and pressure drops on individual components in the filter trains. Temperature instrumentation indicates air temperatures both upstream and downstream of the relative humidity heaters. The heaters are equipped with high temperature cutoffs. Instrumentation requirements for the operation and control of the safety-related functions of the EGTS are covered in Section 6.2.3.5.1.

6.5.1.5.2 Auxiliary Building Gas Treatment System Air Cleanup Units

Permanently installed pressure differential gauges across the prefilter, both HEPA filter banks, and both carbon adsorbers allow periodic surveillance of dust loadings and pressure drops on individual components in the filter trains. Temperature

instrumentation indicates air temperatures downstream of the relative humidity heaters. The heaters are equipped with high temperature cutoffs.

Instrumentation requirements for the operation and control of the safety-related functions of the ABGTS are covered in Section 6.2.3.5.2.

6.5.1.5.3 Reactor Building Purge System Air Cleanup Units

Permanently installed pressure differential gauges across the prefilter, the HEPA filter and the carbon adsorber allow periodic surveillance of dust loadings and pressure drops on individual components in the filter trains. Temperature instrumentation indicates air temperature at the carbon adsorber. Instrumentation requirements for the operation and control of the safety-related functions of theReactorBuilding purge system are covered in Section 9.4.6.1.

6.5.1.5.4 Main Control Room Emergency Air Cleanup Units

Permanently installed pressure differential gauges across the HEPA filter and carbon adsorber allow periodic surveillance of dust loadings and pressure drops on individual components in the filter trains. Temperature instrumentation indicates air temperature downstream of the carbon adsorber. Instrumentation for operation and control of the safety-related functions of the main control room emergency air cleanup system are discussed in Section 6.4.6.

6.5.1.6 Materials

6.5.1.6.1 Emergency Gas Treatment System Air Cleanup Units

Materials for HEPA filters and carbon adsorbers in the EGTS are designed for a stable and dependable operation in the accident environments discussed above. The carbon adsorbers are individually encased, flat-bed, tray-type units. Each tray contains new, commercially pure, activated carbon treated with iodine or an iodine compound to facilitate removal of organic and inorganic iodine compounds. The carbon ignition temperature after impregnation is greater than 620°F. Adsorber material and gaskets can withstand gamma doses of 1×10^8 rads accumulated in a 1-month period.

6.5.1.6.2 Auxiliary Building Gas Treatment System Air Cleanup Units

Same as in Section 6.5.1.6.1.

6.5.1.6.3 Reactor Building Purge System Air Cleanup Units

Same as in Section 6.5.1.6.1.

6.5.1.6.4 Main Control Room Emergency Air Cleanup Units

Same as in Section 6.5.1.6.1.

6.5.2 Containment Spray System for Fission Product Cleanup

6.5.2.1 Design Bases

There are no formal design bases established for air cleanup by the containment spray system. This was done with the knowledge that water from the containment spray system will remove halogens and particulates from the containment atmosphere following a LOCA. No credit, however, was taken for this removal process in accident analyses presented in Section 15.5.3. In such circumstances, no design bases are needed for this air purification action.

6.5.2.2 System Design

See Section 6.2.2.2.

6.5.2.3 Design Evaluation

See Section 6.2.2.3.

6.5.2.4 Tests and Inspections

See Section 6.2.2.4.

6.5.2.5 Instrumentation Requirements

See Section 6.2.2.5.

6.5.2.6 Materials

See Section 6.2.2.6.

6.5.3 Fission Product Control Systems

6.5.3.1 Primary Containment

The primary containment is designed to assure that an acceptable upper limit leakage of radioactive material is not exceeded under design basis accident conditions. For purposes of integrity, the primary containment is composed of both the free-standing steel shell containment vessel and the containment isolation system. This structure and system are directly relied upon to maintain containment integrity. The primary containment functional design is described in Section 6.2.1.

Containment isolation can be initiated by either of two signals:

Phase A signal is generated by either of the following:

(1) Manual - either of two momentary controls.

(2) Safety injection signal generated by one or more of the following:

(a) Low steamline pressure in any steamline.

(b) Low pressurizer pressure.

(c) High containment pressure.

(d) Manual - either of two momentary controls.

Phase B signal is generated by either of the following:

(1) Manual - two sets (two switches per set) - actuation of both switches in either set is necessary for spray initiation.

(2) High-high containment pressure signals.

Containment isolation Phase A exists if containment isolation Phase B exists; i.e., when the Phase B signal is initiated by automatic instrumentation. Phase A containment isolation does not occur when the Phase B signal is initiated manually. The instrumentation circuits that generate both Phase A and Phase B signals are described in Section 7.1.2.1.2.

Containment purge system isolation (containment purge lines only) can be initiated by either of two signals:

(1) Manual - Phase A or B manual initiate

- SIS manual initiate

(2) Automatic - SIS auto-initiate

- Purge exhaust high radiation (Train A or B sensor)

An analysis was performed to determine the offsite radiological consequences of a LOCA during a containment purge. A DBA-LOCA was considered. The purge system will isolate 4 seconds after the detection of high radiation in the purge exhaust (the analysis used 5 seconds for conservatism). Per Branch Technical Position CSB 6-4, only reactor coolant was used as the source term because 5 seconds is not enough time for significant fuel damage. Because only reactor coolant is used as the source term, the analysis bounds the 98 gpm small break LOCA. Regulatory Guide 1.4 assumptions were used (See Chapter 15) except for the following: 1) reactor coolant source terms, 2) an iodine spiking factor of 10, 3) 100% noble gasses and 100% iodines become airborne (which is conservative since this means no iodine partitioning), 4) the mass release of containment air is based on two 24-inch purge lines, and 5) purge flow goes directly to the environment without filtration via the containment purge exhaust filters.

The results found in Table 6.5-7, which when added to the offsite doses from Regulatory Guide 1.4 LOCA results (2-hour EAB limiting doses of 2.234 rem gamma,

1.226 rem beta, and 30.77 rem inhalation) are less than the 10 CFR 100 limits of 25 rem gamma, 300 rem beta, and 300 rem inhalation.

The primary containment design bases and layout are further discussed in Section 6.2.1. The design and operation of the containment purge ventilation system is discussed in Section 9.4.6.

6.5.3.2 Secondary Containments

Two secondary containment barriers are provided at the Watts Bar Nuclear Plant. One of these is formed by the Shield Building that surrounds the steel primary containment vessel. The other secondary containment barrier is the Auxiliary Building structure that encloses all equipment in the building that may handle, collect, or store radioactive materials during normal operation or during accident conditions.

Because the Shield Building completely encloses the free-standing primary containment, all airborne leakage from primary containment passes into the annular region provided by this arrangement. See Part I of Table 6.5-8 and Section 6.2.3 for additional information on the operation of the air cleanup system that processes annulus air following a DBA.

The Auxiliary Building is a conventional reinforced concrete structure located between the Reactor Buildings and the Control Building. Certain of the building's interior and exterior walls, floor slabs, and a part of its roof form the isolation barrier as outlined in Figures 6.2.3-4 through 6.2.3-9. The accident conditions for which the Auxiliary Building isolation barrier serves as the containment barrier are these involving irradiated fuel within the confines of the building and spills or leaks of radioactive materials from tanks and process lines inside the building. During a LOCA, any through-the-line leakage from primary containment into the Auxiliary Building will bypass the Shield Building annulus. In this case, the Auxiliary Building isolation barrier will serve as a secondary containment enclosure. See Part II of Table 6.5-8 and Sections 6.2.3, 9.4.3, and 9.4.5 for additional information on the Auxiliary Building secondary containment functions.

6.5.4 Ice Condenser as a Fission Product Cleanup System

The ice condenser system is an engineered safety feature designed to serve as a containment air purification and cleanup system. The ice condenser serves primarily as a large heat sink to readily reduce the containment temperature and pressure and condense the steam. For this purpose, ice is stored in a closed compartment between the lower and upper compartments of the containment. The containment is designed such that the only significant flow path from the lower to the upper compartment is through the ice bed. Immediately following a LOCA, a large pressure differential exists between the lower and upper compartment thereby providing flow through the ice bed. Later in the transient, flow is provided by two 40,000 cfm fans which circulate upper containment air into the lower compartment. Since all flow between the lower and upper compartments must pass through the ice bed, the ice bed also serves as a removal mechanism for fission products postulated to be dispersed in the containment atmosphere. Radioiodine in its various forms is the fission product of primary concern

in the evaluation of fission product transport and removal following a LOCA. The major benefit of the ice bed is its capacity to condense steam and thus remove molecular iodine from the containment atmosphere. To assure that the iodine remains in solution, the ice contains sodium tetraborate so that the combined condensate and ice melt is at an alkaline pH which promotes iodine hydrolysis to non-volatile forms.

The physical characteristics of the ice condenser system are discussed in Section 6.7. The ice bed fission product removal capability is discussed in this section.

6.5.4.1 Ice Condenser Design Basis (Fission Product Cleanup Function)

The design basis of the ice condenser as an iodine removal system is to use the chemical and physical properties of ice to reduce the fission product iodine concentration in the post LOCA containment atmosphere.

6.5.4.2 Ice Condenser System Design

The function of the post LOCA iodine removal served by the ice condenser is accomplished by chemically controlling the alkaline ice to a pH range of 9.0 to 9.5. This is accomplished by adding sodium tetraborate to the demineralized water in the solution of $Na_2B_4O_7 \bullet 10H_2O$ for a boron concentration of 1900 $\pm$ 100 ppm prior to ice basket loading. During the accident, the melting ice provides a medium for removal of iodine from the containment atmosphere and fixation of the iodine in solution.

6.5.4.2.1 Component Description

The component description of the ice condenser system is given in Section 6.7.

6.5.4.2.2 System Operation

The operation of the ice condenser system is described in Section 6.2.1.3.2 and Section 6.2.1.3.3.

6.5.4.3 Ice Condenser System Design Evaluation (Fission Product Cleanup Function)

As a result of experimental and analytical efforts by Westinghouse, the ice condenser system has been proved to be an effective passive system for removing elemental iodine from the containment atmosphere and thereby reducing the offsite doses following a loss of coolant accident.

The experimental program and results of the ice condenser system effectiveness in removal of elemental iodine is reported in WCAP-7426, a non-proprietary topical report. The results of these extensive bench scale tests clearly indicated that an ice condenser system containing sodium tetraborate ice could effectively remove elemental iodine from the containment atmosphere.

In order to apply the results of the bench scale experimental program, an analytical model applicable to the plant ice condenser system was developed from the data of the experimental program.

The purpose of this section is to describe the analytical model and present the results of the ice condenser iodine removal effectiveness analysis.

Analytical Model

Following a LOCA a large volume of steam discharges into the containment lower compartment. Containment pressure and temperature rise immediately. At first, the increased pressure in the lower compartment forces steam through the ice condenser sections. Later, recirculation fans circulate the iodine-air-steam mixture through the ice condenser.

In addition to steam, iodine may be liberated into the containment as gaseous elemental iodine. It is also assumed that a fraction of the iodine in the containment atmosphere exists as methyl iodine which is not removed by the ice condenser. Elemental iodine is readily soluble in aqueous solutions and is removed from the air-steam mixture by the ice condenser.

The ice in the ice condenser contains sodium tetraborate normally referred to as alkaline ice by virtue of the alkalinity of the ice melt.

Data obtained from the experimental program as reported in WCAP-7426 can be classified as (1) alkaline ice and (2) acid ice. Since alkaline ice is used in the ice condenser, the iodine removal efficiency from those tests results were correlated.

The theoretical analysis for iodine removal by alkaline ice treats the ice condenser as consisting of two distinct compartments, an ice section and a rain section. Melt, falling from the ice into the sump, comprises the rain section (see Figure 6.5-1). Steam condenses from the air-steam mixture in both sections. In the ice section, $(1 + \lambda_v/\lambda_f)$ grams of melt mixture are formed per gram of steam condensed, where λ_v is latent heat of vaporization of water and λ_f is latent heat of fusion of water. In the rain section, however, only 1 gram of melt mixture is formed per gram of steam condensed. Melt temperature rises above 32°F as steam condenses in the rain. As ice continues melting, the rain section plays a more significant role in iodine removal.

An equation for iodine removal efficiency is obtained by solving the multi-component diffusion equations for steam-air-iodine mixtures in both ice condenser sections.

In the rain section, iodine is treated as a trace component with air and steam as the bulk constituents. Iodine from the bulk vapor diffuses through a gaseous boundary layer into the spherical drop as it falls through the rain section.

Condensation of water vapor and absorption of iodine in the ice section were treated in a similar manner. Ice is modeled as a flat plate surrounded by an essentially stagnant air-steam-iodine boundary layer through which steam and iodine diffuse.

The solution of the diffusion equations based on the above assumptions results in the following relationship:

$$\eta_I = Y_S \eta_S$$

where:

η = the iodine removal efficiency $\frac{\text{gm iodine removed}}{\text{gm iodine fed to condenser}}$

Y_s = the mole fraction steam in inlet gas stream

η_s = the steam condensation efficiency $\frac{\text{gm steam condensed}}{\text{gm steam fed to condenser}}$

Since the steam condensation efficiency in an ice condenser is nearly 100%, the iodine removal efficiency is directly related to the mole fraction of steam in the inlet gas stream.

Application of Ice Condenser Iodine Removal Model

The ice condenser iodine removal model has been applied to an ice condenser containment.

This model assumes iodine is released from the reactor system after blowdown and mixed with steam from boil off and is swept to the ice condenser by the recirculation fans.

The vapor composition of the lower compartment is a homogeneous mixture of iodine, steam from core boil off, and air.

The ice bed iodine removal efficiency, η_I has been computed on a time dependent basis and is shown in Table 15.5-7.

6.5.4.4 Condenser System Tests and Inspections

During initial ice loading, periodic tests are conducted to verify that the boron concentration and pH of the ice is within acceptable limits. This is accomplished by measuring the pH and boron concentration of samples of the solution prior to freezing. At routine intervals during plant operation, samples of the ice are taken, melted, and measured for pH and boron concentration to verify that these values are still within acceptable limits. The initial concentration of boron can only increase due to dissipation of some H_2O by sublimation.

6.5.4.4.1 Ice Condenser System Instrumentation

The ice condenser is a passive system which requires no instrumentation for operation.

6.5.4.5 Ice Condenser Materials

See Section 6.7.18.

REFERENCES

None.

Table 6.5-1 Regulatory Guide 1.52, Rev. 2, Section Applicability For The Emergency Gas Treatment System
(Page 1 of 2)

Reg. Guide Section	Applicability To This System	Comment Index	Reg. Guide Section	Applicability To This System	Comment Index
C.1.a	yes	Note 1	C.3.i	yes	Note 7
C.1.b	yes	Note 2	C.3.j	yes	Note 7
C.1.c	yes	Note 2	C.3.k	yes	Note 9
C.1.d	yes	--	C.3.l	no	Note 7
C.1.e	yes	--	C.3.m	yes	--
			C.3.n	no	Notes 6, 7, & 13
C.2.a	yes	--	C.3.o	yes	--
C.2.b	yes	--	C.3.p	no	Notes 10 & 7
C.2.c	yes	--			
C.2.d	no	Note 3	C.4.a	no	Note 10
C.2.e	yes	--	C.4.b	no	Note 11
C.2.f	yes	--	C.4.c	no	Note 7
C.2.g	yes	Note 12	C.4.d	yes	--
C.2.h	yes	--	C.4.e	yes	
C.2.i	yes	--			
C.2.j	no	Note 4	C.5.a	yes	Note 8
C.2.k	no	Note 5	C.5.b	yes	Note 8
C.2.l	no	Note 6	C.5.c	yes	Note 8
			C.5.d	yes	Note 8
C.3.a	yes	Note 7			
C.3.b	yes	Note 7	C.6.a	yes	Notes 7 & 8
C.3.c	yes	Note 7	C.6.b	yes	Note 7
C.3.d	yes	Note 7			
C.3.e	yes	Note 7			
C.3.f	yes	--			
C.3.g	yes	Note 7			
C.3.h	yes	--			

Notes

1. The emergency gas treatment system is designed to withstand conditions resulting form the design basis LOCA.
2. The design is consistent with assumptions found in Regulatory Guide 1.4. Regulatory Guides 1.3 and 1.25 are not applicable.
3. No significant pressure surges to this system are envisioned resulting from the design basis LOCA. Thus, the system needs no special protection features to offset pressure surges.
4. Each unit is totally enclosed and structurally adequate to permit intact removal. However, the probability of the need to remove the unit intact is small and to do so is impractical.
5. There are no outdoor air intakes associated with the emergency gas treatment system.

Table 6.5-1 Regulatory Guide 1.52, Rev. 2, Section Applicability For The Emergency Gas Treatment System
(Page 2 of 2)

Notes Continue

6. No enhancement in safety is foreseen by utilizing low leakage ductwork in this system. Any leakage which occurs inside the Shield Building eventually reenters the EGTS and is processed. No leakage to the Auxiliary Building from the ductwork between the Shield Building and the filter housing is foreseen, since air inside the duct is at a lower pressure than the surroundings. Any contaminated leakage into the Auxiliary Building is processed by the ABGTS before release to the environs. System leakage is determined based on analysis of the impact on acceptable accident dose limits of 10 CFR 100. Leakage from ductwork on the downstream side of the filter housing causes no problem since this air is cleaned up by the emergency gas treatment and auxiliary building gas treatment systems. However, the air cleanup ductwork is leak-tested in accordance with ANSI N509-1976.
7. Compliance with ANSI/ASME N509 is not required since the system was designed and constructed before publication of the ANSI document. The system conformed to this section of Regulatory Guide 1.52 Rev. 0 at the time of design and construction, and leakage testing is performed in accordance with ANSI N509-1976. Whenever possible, parts or components used as replacements will comply fully with the latest issue of ANSI/ASME N509. For welding requirements for ductwork, see Note 13.
8. Compliance with ANSI/ASME N510 is not required since the system was designed and fabricated before publication of the ANSI document. However, the system will be tested, when possible, using the procedures outlined in ASME N510-1989.
9. Crossover flow ducts provide the capability to cool an inactive unit loaded with radioactive material to limit the temperature rise from radioactively induced heat and thus prevent auto ignition of the charcoal.
10. Compliance with this section is not a licensing requirement.
11. Space constraints do not permit compliance with this section.
12. The system design provides for total pressure drop indication across the filter housing and low flow annunciation of the operating fan in the MCR.
13. Those portions of TVA Classes Q and S Category I duct which are of welded construction and are fabricated or repaired after January 12, 1987, meet the welding requirements of ANSI/ASME N509-1976. The workmanship samples are not required to have penetrant testing (PT) or magnetic particle testing (MT).

Table 6.5-2 Regulatory Guide 1.52, Rev. 2, Section Applicability For The Auxiliary Building Gas Treatment System
(Page 1 of 2)

Reg. Guide Section	Applicability To This System	Comment Index	Reg. Guide Section	Applicability To This System	Comment Index
C.1.a	yes	Note 1	C.3.i	yes	Note 7, 8
C.1.b	yes	Note 2	C.3.j	yes	Note 7
C.1.c	yes	Note 2	C.3.k	yes	Note 8
C.1.d	yes	--	C.3.l	no	Note 7
C.1.e	yes	--	C.3.m	yes	--
			C.3.n	no	Notes 5, 7, & 12
C.2.a	yes	--	C.3.o	yes	--
C.2.b	yes	--	C.3.p	no	Notes 7 & 9
C.2.c	yes	--			
C.2.d	no	Note 3	C.4.a	no	Note 9
C.2.e	yes	--	C.4.b	no	Note 6
C.2.f	yes	--	C.4.c	no	Note 7
C.2.g	yes	Note 11	C.4.d	yes	--
C.2.h	yes	--	C.4.e	yes	--
C.2.i	yes	--			
C.2.j	no	Note 4	C.5.a	yes	Note 10
C.2.k	yes	--	C.5.b	yes	Note 10
C.2.l	no	Note 5	C.5.c	yes	Note 10
			C.5.d	yes	Note 10
C.3.a	yes	Note 7			
C.3.b	yes	Note 7	C.6.a	yes	Notes 7 & 10
C.3.c	yes	Note 7	C.6.b	yes	Note 7
C.3.d	yes	Note 7			
C.3.e	yes	Note 7			
C.3.f	yes	--			
C.3.g	yes	Note 7			
C.3.h	yes	--			

Notes

1. The postulated DBA for the auxiliary building gas treatment system is the design basis LOCA.
2. The design is consistent with assumptions found in Regulatory Guide 1.4.
3. No significant pressure surges to this system are envisioned resulting from the design basis LOCA. Thus the system needs no special protection features to mitigate pressure surges.
4. It would be possible to remove the unit intact, but not practical. The probability of the need to do so is considered to be negligible.
5. The use of low leakage ductwork would not enhance the safety of the system since any leakage that occurs is eventually routed back to the ABGTS and processed before being released to the environs. Leakage from the Auxiliary Building secondary containment enclosure to the environs is negligible since it is maintained at a negative pressure with respect to the atmosphere. Final acceptable system leakage is determined based on analysis of the impact on acceptable accident dose limits of 10 CFR 100. However, the air cleanup ductwork is leak-tested in accordance with ANSI N509-1976.

Table 6.5-2 Regulatory Guide 1.52, Rev. 2, Section Applicability For The Auxiliary Building Gas Treatment System
(Page 2 of 2)

Notes Continue

6. Space constraints do not permit compliance with this section.
7. Compliance with ANSI/ASME N509 is not required since the system was designed and fabricated before publication of the ANSI document. The system conformed to this section of Regulatory Guide 1.52 Rev. 0 at the time of design and fabrication, and leakage testing is performed in accordance with ANSI N509-1976. Whenever possible, parts or components used as replacements comply with the latest issue of ANSI/ASME N509. For welding requirements for ductwork, see Note 12.
8. The amount of radioactive material collected during the postulated DBA is too small to raise the adsorber bank termperature near the carbon ignition temperature. However, water sprays are provided in the event of a charcoal fire.
9. Compliance with this section is not a licensing requirement.
10. Compliance with ANSI/ASME N510 is not required since the system was designed and fabricated before publication of the ANSI document. However, when possible, the system is tested using the procedures outlined in ASME N510-1989.
11. Low airflow in the operating ABGTS train is annunciated in the MCR.
12. Those portions of TVA Classes Q and S Category I duct which are of welded construction and are fabricated or repaired after January 12, 1987, meet the welding requirements of ANSI/ASME N509-1976. The workmanship samples are not required to have penetrant testing (PT) or magnetic testing (MT).

Table 6.5-3 Regulatory Guide 1.52, Rev.2, Section Applicability For The Reactor Building Purge Ventilation System
(Page 1 of 2)

Reg. Guide Section	Applicability To This System	Comment Index	Reg. Guide Section	Applicability To This System	Comment Index
C.1.a	yes	Note 1	C.3.e	yes	Note 14
C.1.b	yes	--	C.3.f	yes	----
C.1.c	yes	--	C.3.g	yes	Note 14
C.1.d	yes	--	C.3.h	yes	----
C.1.e	yes	--	C.3.i	yes	Note 14
			C.3.j	yes	Note 14
C.2.a	no	Notes 3 & 13	C.3.k	yes	Note 11
C.2.b	no	Note 4	C.3.l	no	Note 14
C.2.c	yes	--	C.3.m	yes	----
C.2.d	no	Note 5	C.3.n	no	Notes 9 & 16
C.2.e	yes	--	C.3.o	yes	----
C.2.f	yes	--	C.3.p	no	Notes 12 & 14
C.2.g	no	Note 6			
C.2.h	no	Note 1	C.4.a	no	Note 12
C.2.i	yes	--	C.4.b	no	Note 17
C.2.j	no	Note 8	C.4.c	no	Note 14
C.2.k	yes	--	C.4.d	yes	----
C.2.l	no	Note 9	C.4.e	yes	----
C.3.a	no	Notes 3 & 10	C.5.a	yes	Note 15
C.3.b	no	Notes 3 & 10	C.5.b	yes	Note 15
C.3.c	yes	Note 14	C.5.c	yes	Note 15
C.3.d	yes	Note 14	C.5.d	yes	Note 15
			C.6.a	yes	Notes 14 & 15
			C.6.b	yes	Note 14

Notes

1. The postulated design basis accident (DBA) for the reactor building purge ventilation system is a fuel handling accident within the Reactor Building.
2. Deleted
3. Each air cleanup unit contains a prefilter bank, HEPA filter bank, and carbon adsorber bank in the order listed.
4. The short duration of the air cleanup operation needed following the postulated DBA identified in Note 1 makes this requirement unnecessary because the probability of such destructive events to equipment already in operation during a short period of time is extremely small.
5. No pressure surges of any significance to this air cleanup equipment are envisioned during the postulated DBA identified in Note 1.
6. The system design provides for temperature and pressure differential indication to allow for periodic surveillance of the filter trains. Also, indication of fan operation is provided in the main control room.
7. Deleted

Table 6.5-3 Regulatory Guide 1.52, Rev.2, Section Applicability For The Reactor Building Purge Ventilation System
(Page 2 of 2)

Notes Continued

8. The amount of radioactive material collected by the filter and adsorber banks during the postulated DBA identified in Note 1 is not sufficient to create a radiation hazard when the time comes to replace the filters and adsorbers.
9. No safety enhancement is foreseen by the use of low leakage ductwork in this system. In the event of a postulated DBA, all system ductwork carrying radioactive material is at a pressure below atmospheric. Consequently, duct leakage in this part is from the outside into the contaminated air stream.
10. No equipment of this kind is utilized in this system because moisture entrainment is considered highly unlikely in the postulated DBA.
11. The amount of radioactive material collected during the postulated DBA is too small to raise the adsorber bank temperature near the carbon ignition temperature. However, water sprays are provided in the event of a charcoal fire.
12. Compliance with this section is not a licensing requirement.
13. Two system requirements affect the sizing of the reactor building purge ventilation system. One of these is the fuel handling accident in the containment. The other is the ventilation required to maintain acceptable air purity in the containment during normal fuel handling operations. In evaluating these needs, it was found that the ventilation capacity needed to maintain a safe working environment in the containment is greater than that needed to mitigate the effects of a fuel handling accident. Therefore, the system was sized for the normal ventilation needs.

    Since fuel handling operations only take place when the purge ventilation system is in operation, at least 200% of the purging capacity needed to clean up the containment atmosphere in the post-accident period is operating should an accident occur. Availability is therefore assured to perform the only engineered safety feature function assigned to this system.
14. Compliance with ANSI/ASME N509 is not required since the system was designed and fabricated before publication of the ANSI documents. The system conformed to this section of Regulatory Guide 1.52 Rev. 0 at the time of design and fabrication, and leakage testing is performed in accordance with ANSI N509-1976. Whenever possible, parts or components used as replacements comply with the latest issue of ANSI/ASME N509. For welding requirements for ductwork, see Note 16.
15. Compliance with ANSI/ASME N510 is not required since the system was designed and fabricated before publications of the ANSI documents. However, the system is tested, when possible, using the procedures outlined in ASME N510-1989.
16. Those portions of TVA Classes Q and S Category I duct which are of welded construction and are fabricated or repaired after January 12, 1987, meet the welding requirements of ANSI/ASME N509-1976. The workmanship samples are not required to have penetrant testing (PT) or magnetic testing (MT).
17. Space constraints do not permit compliance with this section.

Table 6.5-4 Regulatory Guide 1.52, Rev. 2, Section Applicability For The Main Control Room Air Cleanup Subsystem
(Page 1 of 2)

Reg. Guide Section	Applicability To This System	Comment Index	Reg. Guide Section	Applicability To This System	Comment Index
C.1.a	yes	Note 1	C.3.i	yes	Note 12
C.1.b	yes	--	C.3.j	yes	Note 12
C.1.c	yes	--	C.3.k	no	Note 10
C.1.d	yes	--	C.3.l	no	Note 12
C.1.e	yes	--	C.3.m	yes	----
			C.3.n	no	Notes 7, 12, & 14
C.2.a	no	Notes 3 & 9	C.3.o	yes	----
C.2.b	yes	Note 2	C.3.p	no	Note 12
C.2.c	yes	--			
C.2.d	no	Note 4	C.4.a	no	Note 11
C.2.e	yes	--	C.4.b	no	Note 11
C.2.f	yes	--	C.4.c	no	Note 12
C.2.g	yes	Note 5	C.4.d	yes	----
C.2.h	yes	--	C.4.e	yes	----
C.2.i	yes	--			
C.2.j	no	Note 6	C.5.a	yes	Note 13
C.2.k	yes	--	C.5.b	yes	Note 13
C.2.l	no	Note 7	C.5.c	yes	Note 13
			C.5.d	yes	Note 13
C.3.a	no	Notes 3 & 8			
C.3.b	no	Notes 3 & 8	C.6.a	yes	Notes 12 & 13
C.3.c	no	Notes 3 & 8	C.6.b	yes	Note 12
C.3.d	yes	Note 12			
C.3.e	yes	Note 12			
C.3.f	yes	--			
C.3.g	yes	Note 12			
C.3.h	yes	--			

Notes

1. The postulated design basis accident (DBA) for the main control room air cleanup units is the DBA LOCA.
2. All equipment is protected from natural phenomena and no high pressure equipment exists in the area. Rotating equipment is suitably encased and therefore, no missiles are expected to be generated which could result in loss of redundancy.
3. Each redundant air cleanup subsystem contains a HEPA filter bank and a carbon adsorber bank.
4. No pressure surges of any significance to this system are envisioned during the postulated DBA identified in Note 1.
5. Differential pressure sensors are used to sense failure of an air cleanup unit, switch to the backup unit, and annunciate in the main control room. Differential pressure sensors for the HEPA and adsorber banks are located on the air cleanup unit housings in the mechanical equipment room located next to the main control room. This mechanical equipment room is readily accessible to main control room personnel.

Table 6.5-4 Regulatory Guide 1.52, Rev. 2, Section Applicability For The Main Control Room Air Cleanup Subsystem
(Page 2 of 2)

Notes Continued

6. The amount of radioactive material collected by the filter and adsorber banks in the DBA LOCA is not sufficient to create a serious radiation hazard. Furthermore, adequate capacity for air cleanup is provided to protect the main control room personnel for the full 30 day duration of the postulated emergency. Therefore, there is no need for a filter or adsorber bank replacement during the emergency.
7. No enhancement in safety is foreseen by utilizing low leakage ducting in this system. Leakage from commercial grade ducting within the main control room cannot jeopardize safety because all supply and exhaust air is clean. No safety hazard due to small duct leakage outside the enclosed space containing the main control room is envisioned. During emergencies, essentially all air in-leakage into ducting with air below atmospheric pressure is cleaned up in its passage through the air cleanup unit. The external ducting having air at a positive pressure and potentially entraining contaminants which can be introduced into the main control room due to the leakage and the air cleanup units are leak-tested in accordance with ANSI N509-1976.
8. No equipment of this kind is utilized in the system.
9. The small quantities of outside air brought inside do not contain sufficient moisture to cause the mixture of recirculated air and outside air to have a humidity level sufficiently high to degrade the adsorber bank performance.
10. The amount of radioactive material collected during the entire 30 day emergency due to the postulated DBA is too small to raise the adsorber bank temperature near the carbon ignition temperature.
11. Compliance with this section is not a licensing requirement.
12. Compliance with ANSI/ASME N509 is not required since the system was designed and fabricated well before publication of the ANSI document. The system conformed to this section of Regulatory Guide 1.52 Rev. 0 at the time of design and fabrication, and leakage testing is performed in accordance with ANSI N509-1976. Whenever possible, parts or components used as replacements comply with the latest issue of ANSI/ASME N509. For welding requirements for ductwork, see Note 14.
13. Compliance with ANSI/ASME N510 is not required since the system was designed and fabricated before publication of the ANSI document. However, the system is tested, when possible, using the procedures outlined in ASME N510-1989.
14. Those portions of TVA classes Q and S Category I duct which are of welded construction and are fabricated or repaired after January 12, 1987, meet the welding requirements of ANSI/ASME N509-1976. The workmanship samples are not required to have penetrant testing (PT) or magnetic testing (MT).

Table 6.5-5 ESF Air Cleanup Unit Data

I. Emergency Gas Treatment System
Air Flow Rate: 4,000 ft^3/min each

Type	Banks/ Train	Cells/ Bank	Cells/ Train	Total Cells
Prefilter	1	4	4	8
HEPA	2	4	8	16
Carbon	2	12	24	48

II. Auxiliary Building Gas Treatment System
Air Flow Rate: 9,000 ft^3/min each

Type	Banks/ Train	Cells Bank	Cells/ Train	Total Cells
Prefilter	1	9	9	18
HEPA	2	9	18	36
Carbon	2	27	54	108

III. Reactor Building Purge System Air Flow Rate:
22,949 ft^3/min total

Type	Banks/ Train	Cells/ Bank	Cells/ Train	Total Cells
Prefilter	1	14	14	28
HEPA	1	14	14	28
Carbon	1	42	42	84

IV. Main Control Room Emergency Air Cleanup Subsystem
Air Flow Rate: 4,000 ft^3/min each
(Makeup 711 ft^3/min, recirculate 3,289 ft^3/min)

Type	Banks/ Train	Cells/ Bank	Cells/ Train	Total Cells
HEPA	1	4	4	8
Carbon	1	12	12	24

Table 6.5-6 Deleted in FSAR Amendment 65

Table 6.5-7 Primary Containment Operation Following A DBA

General

A. Type of Structure: Free-Standing Steel Shell (See Sections 3.8.1, 3.8.2, and 3.8.5)

B. Internal Fission Product Removal Systems

1. Containment Spray System: See Section 6.5.2
2. Ice Condenser System: See Section 6.5.4

C. Free Volume: 1,270.000 cu. ft.

Offsite Radiological Consequences - LOCA During Purge

(Purge Contribution Only) With and Without Iodine Spike:

	2-Hour Exclusion Area Boundary No I Spike (rem)	30-Day Low Population Zone No I Spike (rem)	2-Hour Exclusion Area Boundary With I Spike (rem)	30-Day Low Population Zone With I Spike (rem)
Gamma	6.191E-04	1.438E-04	3.986E-03	9.258E-04
Beta	3.035E-04	7.050E-05	1.088E-03	2.528E-04
Inhalation	4.839E-02	1.124E-02	4.843E-01	1.125E-01

Mass Release of Containment Air During Purge: 1.233E6 grams

Time to Isolate Purge: 4 seconds (analysis used 5 seconds)

Time-Dependent Parameters

Leak Rate of Primary Containment: 0.25 %/day

Leakage Fractions - To Annulus: 0.75

To Auxiliary Building: 0.25

To Environment: 0

Effectiveness of Fission Product Removal Systems

Containment Spray System: No credit taken for post-LOCA cleanup capability

Ice Condenser System: See Section 6.5.4

Initiation of Hydrogen Recombiner - Time after LOCA: Less than 24 hours

Hydrogen Recombiner Flow Rate: 100 scfm

Hydrogen Concentrations Inside Containment: See Section 6.2.5

Table 6.5-8 Secondary Containment Operation Following A DBA

PART I - Shield Building Secondary Containment Enclosure

General

Type of Structure: Reinforced Concrete
Free Volume: 396,000 cubic feet
Annulus Width: Approximately 5 feet
Location of Fission Product Removal Systems: See Sections 6.5.1 and 6.5.4

Time-Dependent Parameters

Inleakage Rate: 250 cfm
Pressure: -0.50 inch water gauge (nominal required value at the top of Auxiliary Building elevation)
Air Cleanup System Flow Rate: 4000 cfm
Recirculation Flow Rate: 3750 cfm
Exhaust Flow Rate: 250 cfm
Effectiveness of Fission Product Removal System: See Section 6.5.3

Part II - Auxiliary Building Secondary Containment Enclosure

General

Type of Structure: Reinforced Concrete
Free Volume: 6.9×10^6 cubic feet
Location of Fission Product Removal Systems: See Section 6.5.1

Time-Dependent Parameters

Average Residence Time: 0.3 hr
Vacuum Relief Flow Rate: 1370 cfm (minimum)
Pressure: - 0.25 inch water gauge
Air Cleanup System Flow Rate: 9,000* cfm
Recirculation Flow Rate: 0 cfm
Exhaust Flow Rate: 9,000* cfm
Effectiveness of Fission Product Removal System: See Section 6.5.3

* A minimum airflow capability of 9300 cfm maintained by periodic surveillance and replacement of filters, as needed.

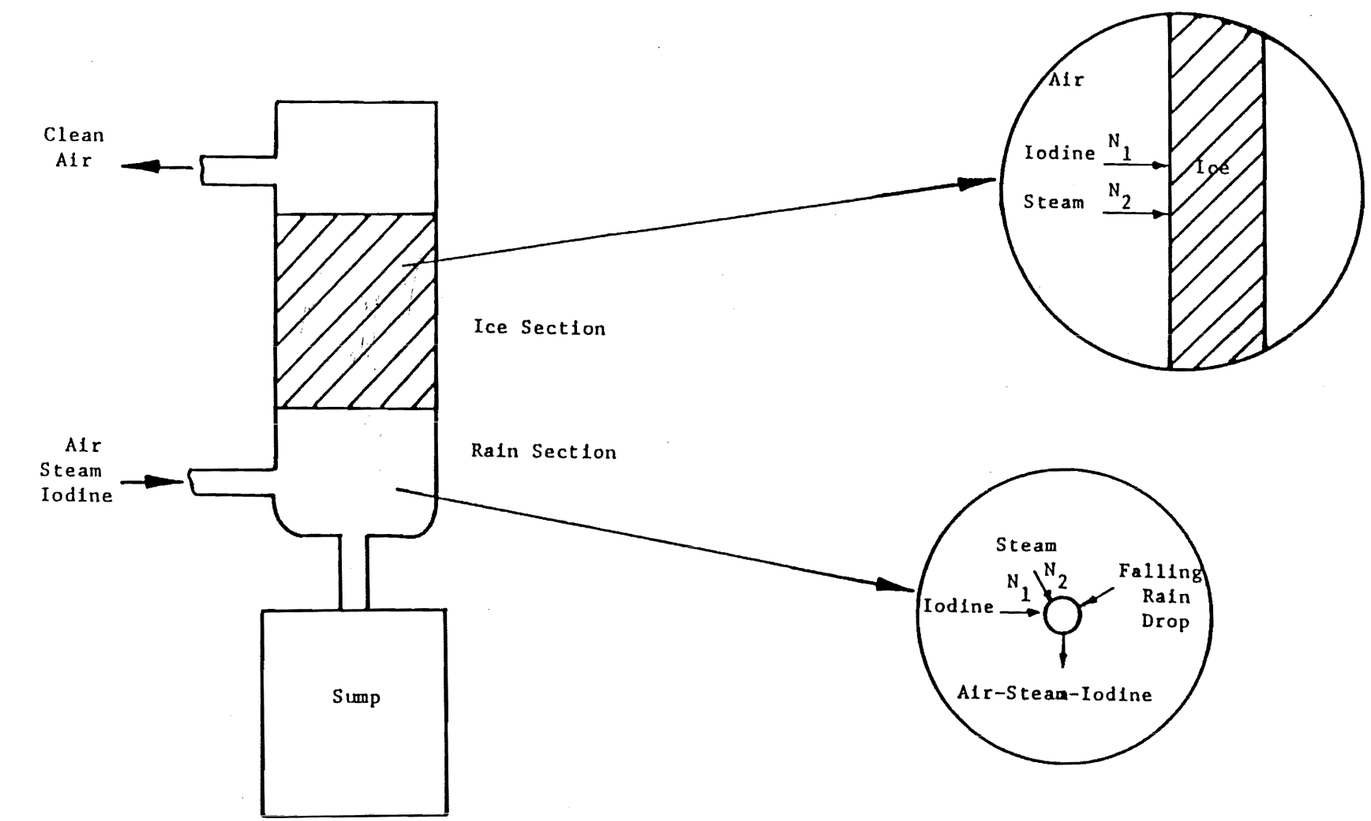

Figure 6.5-1 ICE CONDENSER

AMENDMENT 85

Figure 6.5-1 Ice Condenser

THIS PAGE INTENTIONALLY BLANK

6.6 INSERVICE INSPECTION OF ASME CODE CLASS 2 AND 3 COMPONENTS

6.6.1 Components Subject to Examination and/or Test

All TVA Class A (ASME Code Class 1), B (ASME Code Class 2), and C and D (ASME Code Class 3), components containing water, steam, or radioactive waste shall be examined and tested in accordance with ASME Section XI of the ASME Boiler and Pressure Vessel Code as required by 10 CFR 50, Section 50.55 a(g), except where specific written relief has been requested. The in-service inspection requirements are contained in Section 5.2.8 for ASME Code Class 1 components and Section 3.8.2.7.9 for ASME Code Class MC and metallic liners of Code Class CC components. The inservice inspection requirements are contained in Section 3.8.5.1.1 for ASME Code Class CC concrete components. In addition, this program will implement applicable portions of the WBN Technical Specifications.

6.6.2 Accessibility

Watts Bar design was established prior to the publication of Subsections IWC and IWD of Section XI, ASME Code; however, accessible Class 2 and 3 components will be inservice examined in accordance with the guidelines of Subsections IWC and IWD of ASME Section XI. Accessible Class 2 components will be preservice examined in accordance with subsection IWC of ASME Section XI.

6.6.3 Examination Techniques and Procedures

The visual, surface, and volumetric examination procedures used by TVA are performed in accordance with the guidelines of subarticle IWA-2200, Section XI, ASME Code.

Code Cases to be used are identified in the Inservice Inspection Program in accordance with Subarticle IWA-2440 of ASME Section XI.

6.6.4 Inspection Intervals

An inspection schedule for Class 2 and Class 3 system components will be developed in accordance with the guidelines of Subarticles IWA-2400, IWC-2400 and IWD-2400, Section XI, ASME Code.

6.6.5 Examination Categories and Requirements

The examination categories and requirements for Class 2 and 3 components will be in accordance with subsections IWC and IWD of ASME Section XI to the extent practicable.

6.6.6 Evaluation of Examination Results

Evaluation of examination results shall be in accordance with Article IWA- 3000 of Section XI of the ASME Code.

Components with unacceptable indications will be repaired or replaced in accordance with the guidelines of Articles IWA-4000 and/or IWA-7000.

6.6.7 System Pressure Tests

The program for Class 2 and 3 system pressure tests shall be in accordance with articles IWA-5000, IWC-5000, and IWD-5000, ASME Code, Section XI, except where specific written relief has been requested and approved by the NRC.

6.6.8 Protection against Postulated Piping Failures

Design measures have been taken to ensure that the containment vessel and all essential equipment within or outside of the containment including components of the reactor coolant pressure boundary, and other safety-related components have been adequately protected against the effects of blowdown jet and pipe whip.

REFERENCES

None.

6.7 ICE CONDENSER SYSTEM

Figure 6.7-1 shows the general layout of the ice condenser system.

6.7.1 Floor Structure and Cooling System

6.7.1.1 Design Bases

The ice condenser floor is a concrete structure containing embedded refrigeration system piping.

Figure 6.7-2 shows the general layout of the floor structure. The functional requirements for both normal and accident conditions can be separated into five groups: wear slab, floor cooling, insulation section, subfloor, and floor drain. Each group is described in detail below.

Wear Slab and Floor Cooling System

(1) Function

The wear slab is a concrete structure whose function is to provide a cooled surface as well as to provide personnel access support for maintenance and/or inspection. The wear slab also serves to contain the floor cooling piping.

The floor cooling system intercepts approximately 90% of the heat flowing toward the ice condenser compartments from the lower crane wall and equipment room during normal operation. The floor cooling system is designed with defrost capability. During periods of wall panel defrosting, it is necessary to heat the floor above 32 °F. During an accident, the floor cooling is terminated by the containment isolation valves which are closed automatically. The refrigeration system interface and cooling function is described in Section 6.7.6.2. The cavity below the wear slab is filled with an insulation material to resist the flow of heat into the ice bed during all operating conditions.

(2) Design Criteria and Codes

Refer to the discussion on ice condenser structural design in Section 6.7.16. The following codes are also used in the design:

(a) ANSI B31.5-66, including Addenda B31.5a-1968, Refrigeration Piping.

(b) American Welding Society (AWS) Structural Welding Code AWS D1.1-72 with Revisions 1-73 and 2-74 except later editions may be used for prequalified joint details, base materials, and qualification of welding procedures and welders. Visual inspection of structural welds will meet the minimum requirements of Nuclear Construction Issues

Group documents NCIG-01 and NCIG-02 as specified on the design drawings or other engineering design output. See Item e below.

(c) ANSI Standard Code for Pressure Piping Refrigeration Piping, ANSI B31.5, including Addenda B31.5a-1968.

(d) AISC Manual of Steel Construction, Seventh Edition, 1970.

(e) Nuclear Construction Issues Group (NCIG)

NCIG-01, Revision 2 - Visual Welding Acceptance Criteria (VWAC) for Structural Welding

NCIG-02, Revision 0 - Sampling Plan for Visual Reinspection of Welds

The referenced NCIG documents may be used after June 26, 1985, for weldments that were designed and fabricated to the requirements of AISC/AWS.

NCIG-02, Revision 0, was used as the original basis for the Department of Energy (DOE) Weld Evaluation Project (WEP) EG&G Idaho, Incorporated, statistical assessment of TVA performed welding at WBNP. Any further sampling reinspections of structural welds subsequent to issuance of NCIG-02, Revision 2, are performed in accordance with NCIG-02, Revision 2 requirements.

The applicability of the NCIG documents is specified in controlled design output douments such as drawings and construction specifications. Inspectors performing visual weld examination to the criteria of NCIG-01 are trained in the subject criteria.

(3) Design Conditions

(a) Thermal Conditions

(1)	Initial Cooldown	top of wear slab	70°F
	bottom of wear slab		12°F
(2)	Defrost Cycle	top of wear slab	33°F
	bottom of wear slab		70°F

(b) Seismic Loading

(1)	Operating Basis Earthquake (OBE)	
	Loads	0.36 g
	Vertical OBE	0.40 g radial
	Horizontal OBE	0.52 g tangential
(2)	Safe Shutdown Earthquake (SSE)	
	Loads	0.53 g
	Vertical SSE	0.60 g radial

Horizontal SSE	0.78 g tangential

(c) Design Basis Accident (DBA) Loads

(1)	Pressure load on floor	9 psi
(2)	Floor momentum load (due to deflectors)	36.4 kips

(d) Ice Loading assume 6 in. solid ice on floor 4300 lbs/bay

(e) Live Loading 250 lbs/ft2

(f) Dead Loads

1/4 inch plate	1410 lbs
1/2 inch pipe	164 lbs
Concrete wear slab	9700 lbs

(g) Wall Panel 121 lbs/in. over back 8 in. of slab

(h) "Foam" Concrete Density 40 lbs/ft3

During seismic and/or accident conditions the insulation is designed to support loads transferred by the wear slab.

Structural Subfloor

Refer to Section 3.8.

Floor Drain

(1) Function

The floor drain is a passive structural component during normal operation. Its only function is to minimize heated air inflow to the lower plenum.

The section of floor drain pipe inserted vertically below the wear slab is designed and analyzed to the requirements of the ASME Code, Section III, Class 3. Under accident conditions, the floor drains must not fail in a mode which prevents outflow of water.

(2) Design Criteria and Codes

Flapper gate welding complies with American Welding Society Structural Welding Code, AWS DI.1-1972, as specified in Section 6.7.18. Piping

complies with ASME standard code, Safety Related Piping, ASME Section III.

(3) Design Conditions

Normal Operation	
Design temperature, maximum.	120°F
Nominal ΔP across valve	less than 1 psf
Accident Conditions	
ΔP across check valve	12-14 psi
Temperature pipe and valve	250°F

System Design

Wear Slab and Floor Cooling System

The wear slab is a 4-inch-thick layer of high strength concrete (3000 psi) having an exposed top surface area of 145 ft^2/bay. See Figure 6.7-3 for top surface typical geometry. The concrete has a density of 150 lbs/ft^3 and is prepared with air entrainment admixtures to minimize spalling from freeze/thaw cycles. Steel reinforcing is used in the wear slab to assure adequate and uniform strength. A protective coating is applied to the top of the wear slab which provides an additional water barrier for the wear slab. The floor cooling system consists of 1/2-inch schedule 80 carbon-steel ASTM A-333 Grade 6 piping which is embedded in the wear slab of each bay in a serpentine fashion (see Figure 6.7-3), thereby providing ample cooling of the wear slab surface. The cooling pipes contained in each wear slab rest on a steel plate which extends across the full width of the floor for maximum effectiveness in intercepting heat passing up through the floor. Expansion joints are located at each bay and expansion material is located at the slab perimeter. The floor cooling system maximum coolant pressure is approximately 100 psi. The floor coolant flow rate per bay is adjusted by means of needle valves and is monitored by a temperature sensing element located at the downstream end of each of the bay floor piping. Should a leak develop each individual bay piping loop can be isolated by closing two valves. The coolant contained in the piping is a corrosion inhibited glycol/water solution.

For defrosting purposes, electric heating of the glycol is provided. In general, components requiring periodic maintenance such as pumps, heaters and control valves are located outside of the ice condenser.

The insulation cavity is filled with a low density, closed cell, foam concrete. The nominal density of the foam concrete is 35 lbs/ft^3; the compressive strength is 110 psi. The thermal conductivity per inch thickness is nominally 1.0 Btu/hr-°F-ft^2. The insulation cavity for the foam concrete is sealed by a vapor barrier to provide additional assurance that the insulation section resists infusion of water vapor and thus retains a high thermal resistance. The top surface of the foam concrete is covered with a course of grouting which provides seating surface for the floor plate and cooling coil assemblies.

Floor Drain

Special consideration has been given in the design to minimize gate leakage.

The floor drains employ a section of pipe 12 inches in diameter, inserted vertically below the wear slab. This pipe is insulated with foam glass insulation. The horizontal run is a 12-inch diameter steel pipe embedded in the subfloor, which is at a relatively warm temperature. The drain gate is a 12-inch diameter horizontal flapper gate fabricated from cadmium-plated carbon steel welded per AWS D1.1-1972. The gate is designed to remain closed against the cold air head in the ice condenser to minimize air outleakage during normal operation. It is designed to tolerate a 15 psi back pressure when closed. The gate is in a warm environment, and no freezing will occur.

6.7.1.2 Design Evaluation

Wear Slab

The wear slab, during normal operating conditions, is subject only to its dead weight consisting of concrete, steel reinforcing, steel plates and piping. Six inches of 100% density ice is assumed to be uniformly distributed over the entire floor. The dead weight amounts to 11,200 lbs per bay, the equivalent of 0.56 psi. The live load for maintenance purposes is assumed to be 250 lbs/ft^2. The vertical seismic input is 0.36 g for OBE and 0.53 for SSE. The dead load plus seismic loads are insignificant because the highest load on the floor is contributed by blowdown pressure during design accident conditions. The blowdown pressure is 9 psi, and added to this value, for design purposes, is a 40% design margin, and a dynamic factor of 1.53. This results in a minimum value for design of 19.28 psi.

The most severe loading condition is the combination of the dead load, the SSE seismic acceleration of 0.53 g, the 19.28 psi pressure load and 8.1 psi locally near the deflectors due to flow impulse loadings. The wear slab is designed to accommodate the heatup and cooldown cycles and OBE without overstressing the concrete and coolant piping.

Floor Cooling System

The embedded piping for floor cooling is 1/2 inch schedule 80 pipe. The maximum coolant pressure in the pipe is approximately 100 psi. ANSI B31.5-68 data shows that the pipe can tolerate internal pressures of 4812 psi.

In addition, the piping is tested to 200 psi. The pipe is sized to allow for at least 38 mils of corrosion. Nevertheless, the glycol coolant contains corrosion inhibitors, and as a result pipe corrosion is negligible. The 1/4-inch floor plate is integrated with the concrete through 1/2-inch diameter anchors welded to the plate on 12-inch centers. These anchors prevent thermal loads from concentrating in the piping.

Insulation Section

The insulation section supports wear slab loads. For a conservative analysis the wear slab dead weight + seismic + DBA loads were assumed to be transferred to the foam concrete section. The compressive strength of the foam concrete is sufficient to accept these floor loads.

Floor Drain

Drains are provided at the bottom of the ice condenser compartment to allow the melt/condensate water to flow out of the compartment during a loss-of-coolant accident. These drains are provided with gates that are designed to seal the ice condenser during normal plant operation to prevent loss of cold air from the ice condenser. These gates remain closed against the cold-air head (1 psf) of the ice condenser and open before the water head reaches a value of 18 inches of water.

For a small pipe break, the water inventory in the ice condenser is produced in proportion to the energy added from the accident. The water collecting on the floor of the condenser compartment then flows out through the drains. For intermediate and large pipe breaks the ice condenser doors are open and water drains through both the doors and the drains.

For a large pipe break, a short time (on the order of seconds) is required for the water to fall from the ice condenser to the floor of the compartment. Results of fullscale section tests performed at Waltz Mill show that, for the design blowdown accident, a major fraction of the water drained from the ice condenser, and no increase in containment pressure was indicated even for the severe case with no drains.

A number of tests were performed with the reference flow proportional-type door installed at the inlet to the ice condenser and a representative hinged door installed at the top of the condenser. Tests were conducted with and without the reference water drain area, equivalent to 15 ft^2 for the plant, at the bottom of the condenser compartment.

These tests were performed with the maximum reference blowdown rate, with an initial low blowdown rate followed by the reference rate, with a low blowdown rate followed by the simulated core residual heat rate.

The results of all of these tests show satisfactory condenser performance with the reference type doors vent, and drain for a wide range of blowdown rates. Also, these tests demonstrate the insensitivity of the final peak pressure to the water drain area. In particular, the results of these full-scale section tests indicate that, even for the reference blowdown rate, and with no drain area provided, the drain water did not exert a significant back pressure on the ice condenser lower doors. A major fraction of the water drained from the ice condenser compartment by the end of the initial blowdown. The effect of this test result is that containment final peak pressure is not affected by drain performance.

Although drains are not necessary for the large break performance, 15 ft^2 of drain area was provided for small breaks.

For small breaks, water flows through the drains at the same rate that it is produced in the ice condenser. Therefore, the water on the floor of the compartment reaches a steady height which is dependent only on the energy input rate.

To determine that the 15 ft^2 drain area met these requirements, the water height is calculated for various small break sizes up to a 30,000 gpm break. Above 30,000 gpm, the ice condenser doors would be open to provide additional drainage. The maximum height of water required was calculated to be 2.2 ft above the drain gate. Since this height resulted in a water level which is more than 1 ft below the bottom elevation of the doors, it is concluded that water does not accumulate in the ice condenser for this condition and that a 15 ft^2 drain gives satisfactory performance.

During normal unit operation, the sole function of the gate is to remain in a closed position, minimizing air leakage across the seat. To avoid unnecessary unseating of the valve seat, a 12-inch drain line leading to a 2-inch drain header is connected to the 12-inch line immediately ahead of the valve. Any spillage or defrost water drains off without causing the gate to be opened.

The arrangement of the drain system for the lower inlet region of the ice compartment is shown in Figure 6.7-2.

Special consideration has been given in the design to prevent freezing of the gates and to minimize leakage.

To minimize the potential for gate freezing, a section of pipe is inserted vertically below the seal slab, while the horizontal run of pipe (steel) is imbedded in a warm concrete wall before it reaches the valve. The gate itself is in the upper region of the lower compartment, where the ambient temperature is above freezing.

The gate is held in a closed position by virtue of its design as an almost vertical flapper with a hinge at the top. The 10° angle from vertical holds the flap in place by gravity.

In order to reduce gate leakage to an acceptable value, a sealant is applied to the seating surface after installation of the gates. Tests show that this reduces leakage to practically zero. Maximum allowable leakage rate would be approached as a limit only if all the sealant were to disappear completely from all the gates, which is unlikely. Sealant is replaced as necessary.

Conclusion

On the basis of the structural analysis performed on the floor structure, it is concluded that the floor is adequate for all anticipated loading conditions. In addition, the floor design is compatible with ice condenser wall panel defrosting. The water resulting from the wall panel defrosting produces no adverse effect on the structural integrity of the floor. The use of concrete with entrained air affords ample resistance to the effects of water. Additionally, the floor structure contains water vapor seals. The seals typically include a protective surface coating on the wear slab top surface, a vapor barrier between the foam concrete and the structural subfloor, a leveling course of grout on the top surface of the foam concrete, and a steel plate (in the wear slab) with lapping material in the plate to plate joints. As a result, the effects of water on the floor and insulation is negligible.

6.7.2 Wall Panels

6.7.2.1 Design Basis

Function

The wall panels are designed to thermally insulate the ice bed under normal operating conditions from the heat conducted through the crane wall, the containment wall, and the end walls. In addition, they are designed to provide a circulation path for cold air and a heat transfer surface next to the ice bed so that the ice is maintained at its design temperature range.

The supporting structure of the wall panel also provides for transfer of radial and tangential loads from the lattice-frame columns to the crane wall anchor embedments.

Criteria and Codes

The structural parts of the wall panels are designed to meet the requirements given in Section 6.7.16.

Design Conditions

The service temperature range is 10°F to 20°F and the DBA temperature is 250°F.

The design loads are presented in Table 6.7-1. The loading combinations considered in the design are those given in Section 6.7.16. For the SSE plus DBA combination, ten loading cases are considered.

6.7.2.2 System Design

The wall panel design incorporates provisions for installation on the crane wall, containment wall, and end walls of the ice bed annulus. Containment and end wall panels are similar.

The crane wall panel design incorporates transverse beam sections which are fabricated from standard structural sections and to which the lattice frame column mounting lugs are attached. These sections are attached to the rear mounting angle assemblies by insulated bolts.

Wall panels are attached to the crane and end walls by studs welded to the anchor embedments and to the containment by studs welded to the shell. The crane wall panels extend from the bottom of the upper plenum to the lower support structure where they are supported on the inner circumferential beams of the horizontal platform. The containment wall panels extend from the bottom of the upper plenum to the top of the floor wear slab.

Cooling ducts are incorporated in the design to provide flow from the air handlers in the duct adjacent to the ice bed and return flow in the outer duct of the panel. This provides an even distribution of duct face temperature. Each bottom duct assembly provides a flow path between the inner and outer duct to allow return flow through the outer duct.

The ducts are fabricated as sandwich panels utilizing corrugated sheet sections enclosed in sheet metal enclosures. This type of sandwich construction provides resistance to differential pressure loads and results in minimal overall weight and flow restrictions. Flow sections of wall panels are seal welded to prevent air leakage.

Materials of construction of the wall panels conform to the design criteria discussed in Section 6.7.18.

Areas between air ducts and walls are insulated and areas between adjacent air ducts are insulated and covered with a lap strip to provide a seal between wall surface and ice bed. Elastomers and sealants are insignificantly affected by exposure to a 5 R/hr gamma radiation field over a period of forty years.

6.7.2.3 Design Evaluation

The wall panels have been analyzed for seismic and design basis accident (DBA) loading conditions as well as service loads.

Analysis for DBA Pressure Load

The wall panels are bolted to transverse beam sections with a maximum span of about 24 inches. In the analysis, the wall panels were taken as a 24 in. x 36 in. sandwich plate simply supported on all four sides.

It is noted that a DBA pressure of 19 psig was used in these analyses. The duct internal pressure was neglected in the analyses because it is negligible in relation to the 19 psig (internal design pressure 0.5 psig).

Analysis for Seismic and DBA Transverse Beam Loads

A transverse beam section was investigated for its ability to transmit the imposed seismic and DBA loads from the lattice frame column attachment to the crane wall. A two dimensional beam analysis utilizing the "STASYS" program was employed.

Various loading modes were used with values as shown in Table 6.7-1 (Parts B, C, D and E).

Overall Conclusion

Based on the analyses described in the foregoing, it is concluded that the wall panel assembly meets the design requirements given in Sections 6.7.16 and 6.7.18.

6.7.3 Lattice Frames and Support Columns

6.7.3.1 Design Basis

Function

The lattice frames and support columns assembly provide the following functions:

(1) Positions the ice baskets in the ice bed and controls the hydraulic diameter.

(2) Provides lateral support for the ice baskets under normal seismic and accident loads.

(3) Allows passage of steam and air through the space around ice baskets.

(4) Allows for basket installation and removal requirements.

Structural Requirements

Refer to Section 6.7.16.

Design Criteria

(1) The lattice frames are designed to be compatible with the periodic weighing, procedure for the ice baskets.

(2) The structure is designed to position the ice columns in the required array to maintain the performance of the ice condenser. In particular, the flow area around each ice column is maintained within the limits established by the general design criteria.

(3) The lattice frame allows loading of the ice baskets in position, and permits lifting of complete basket columns for removal in sections.

Materials Requirements

Refer to the listing of acceptable materials in Section 6.7.18. All accessible steel components are covered by protective coating.

General Thermal and Hydraulic Performance

(1) The lattice frames space the ice basket columns so that the hydraulic diameter around each ice column is maintained for all modes of operation.

(2) Differential thermal expansion between crane wall and lattice frame structure, together with other applicable loads, do not stress the lattice frames or associated supporting structure beyond the design limits, or adversely affect the spacing between lattice frames.

(3) Forces across the lattice frames in the horizontal and vertical direction due to seismic and blowdown loads do not overstress the lattice frame and supporting, structure beyond the design limits.

Interface Requirements

(1) Lattice Frame to Ice Basket Columns

The lattice frame locates and aligns the ice basket array. Sufficient clearance is provided to assure ease of ice basket installation, while limiting radial

basket motion to a nominal amount. The lattice frame structure is also capable of withstanding design and operating seismic and accidental loading.

(2) Lattice Frame to Lattice Frame Column

The lattice frame is attached to the lattice frame columns. The column bases is adjustable so that matching of columns to lower support structure can accommodate the range of manufacturing and installation tolerances.

(3) Lattice Frame, Columns to Crane Wall Air Duct Panels

The lattice frame columns are bolted to the wall panel cradles. Lateral seismic loading from ice baskets and lattice frame is transmitted to the crane wall through the lattice frame columns and the wall panel cradles.

(4) Lattice Frame Columns to Lower Support Structure

Lattice frame columns interface with the lower support structures. The columns are designed to allow for accumulation of dimensional tolerances at interfaces.

(5) Lattice Frame Columns to Intermediate Deck

The top end of the lattice frame columns at each bay supports the intermediate deck and related supports.

(6) Allowance is made for mounting the ice condenser temperature sensing system onto the lattice frames.

Design Load

The lattice frames and support columns are designed to withstand dead loads, live loads, seismic loads (including impact and accident loads) and remain within the allowable limits established in Section 6.7.16. Differential thermal expansion loads due to normal and accident conditions are also considered. Structural loads are not transmitted through the lattice frames and columns to the containment structure. Figures 6.7-4 and 6.7-5 show the lattice frame loading orientation and distribution.

The lattice frame and column are designed to withstand the following load combinations in both the tangential and radial directions:

Dead Loads + Operating Basis Earthquake
Dead Loads + Safe Shutdown Earthquake
Dead Loads + Design Basis Accident
Dead Loads + Design Basis Accident + Safe Shutdown Earthquake

6.7.3.2 System Design

The lattice frames are structural steel grid work structures located in the ice condenser annulus and fitted between the lattice frame support columns and clearing the wall panel ducts.

The lattice frames are mounted radially across the ice condenser annulus for the full 300° of annulus circumference at each of eight levels between the lower support structure and the intermediate deck. The first level is located 15 feet above the wear slab or ice condenser floor and the next seven levels are vertically spaced at 6 feet intervals. A total of 576 lattice frames are required for the ice condenser assembly. Three lattice frames are required per level in each of the 24 bays and this configuration is repeated for the eight levels.

The lattice frames are mounted to rectangular steel columns which are placed at the crane wall side and at the containment side of the condenser annulus. The column bases are attached to the lower support structures. Columns at the crane walls are attached along the length of the wall panel cradles and to the lower support structure, while those at the containment side are free-standing, i.e., the bases are fastened to the lower support structure but there are no connections with the wall panels or the containment vessel wall. This arrangement prevents transmission of loads from ice baskets, lattice frames and columns to the containment vessel. The vertical columns and crane wall support and maintain the lattice frame geometry during normal and accident loading conditions.

The lattice frames are welded steel structures consisting of radial struts supported by welded cross bracing as shown in Figure 6.7-6. Basically the lattice frame is about 125 in. long, 48 in. at its widest point, and 7-1/2 in. deep. The entire welded structure weighs about 1200 lbs. Individual free path penetrations are provided for each of 27 ice baskets. The lattice frame struts that form the ice basket restraints are all double fillet welded to the stringers. This assures a consistent weld design and ensures the integrity of the entire structure in operation.

Flexible radial members on the lattice frame are located at the containment side to accommodate differential thermal expansion in the tangential direction, and to allow for minor column misalignment at installation. The flexible radial members are attached to the vertical support columns.

The lattice frame attachment at the crane wall consists of horizontal ear-like tabs that accommodates the bolting. One tab is slotted in the tangential direction to allow for differential thermal expansion between the concrete crane wall and the steel structures. Lattice frame tabs are fastened to brackets on the vertical support columns. The columns, in turn, are bolted to the crane-side wall panel cradles. The wall panel cradles are fastened to the crane wall studs and transmit the lattice frame and ice basket horizontal loads to the crane wall, while the vertical loads are transmitted to the lower support structure.

The cross bracings and radial struts are arranged so that the ice baskets are positioned in the free path penetrations. The free path diameter controls the radial clearance

between ice baskets and the lattice frames. The penetrations are spaced to assure the proper hydraulic diameter around each ice basket and to allow free passage of air and steam through the surrounding passages. Small pads on the radial struts control the tagential ice basket clearance.

All of the welding and inspection was done in accordance with the American Welding Standard Procedure, D1.1-72. The welds are inspected visually and then by magnetic particle inspection. The magnetic particle inspection is applied to selectively located welds throughout the structure.

All accessible exposed steel components are covered by a protective coating.

6.7.3.3 Design Evaluation

The lattice frames are analyzed using the ICES-STRUDLE II system of computer programs for frame analysis. STRUDLE is a general program operating as a subsystem of the Integrated Civil Engineering (ICES) program. The lattice frames are treated as three dimensional structures composed of joints, support joints, and structural members connecting the joints. Figure 6.7-7 illustrates the analytical model generated for the lattice frames. Each structural joint is assigned a circled number, and each structural member an uncircled number.

The lattice frame is treated as a cantilevered structure in the horizontal plane and restrained vertically at the four column connections. The model in Figure 6.7-7 shows flexible connections at the crane wall and no connection at the Containment wall. Variations in flexibility of the crane wall connections are considered in the analysis to simulate the behavior of the slotted tab connection and the connections to lattice frame columns and air duct wall panels.

The analysis of the loads for the individual maximums of D + OBE, D + SSE and D + DBA is determined. A survey is also conducted for the loading combinations of D + SSE + DBA for each lattice frame level at reference seismic orientation, 45°, and 90° from reference to determine the maximum loading condition on the lattice frame. The survey shows that the highest loads occur on the lattice frame at the 33 ft level, and that the combination of D + SSE + DBA, horizontally and vertically produces the maximum stresses.

Maximum stresses are calculated at each structural member at the edge of the fillet weld for all loading conditions.

Fatigue stresses due to OBE loading were calculated and are within the allowable limits defined in Section 6.7.16.

The vertical support columns and brackets which support the lattice frames are structurally analyzed to determine structural integrity. The worst load combinations of D + OBE, D + SSE, D + SSE + DBA are considered in the analysis. The stress analysis indicates that the stress for all loading conditions is below the allowable limits as defined in Section 6.7.16.

The vertical support numbers are also analyzed to determine buckling characteristics. Analysis using classical buckling methods indicates that this phenomena is not a concern.

6.7.4 Ice Baskets

6.7.4.1 Design Basis

Function

The function of the ice baskets is to contain borated ice in 12-inch diameter columns 48 feet high. The ice absorbs the thermal energy resulting from LOCA or steam line break in the Containment structure. The baskets are arranged to promote heat transfer from the steam to ice during and following these accidents. The function of the ice baskets is also to provide adequate structural support for the ice and maintain the geometry for heat transfer during or following the worst loading combinations.

Loading Modes

The following loading conditions are considered in the design of the ice baskets: dead weight, seismic loads, blowdown loads, and impact loads between the basket, ice and lattice frames. The baskets withstand these loads and remain within the allowable limits established in Section 6.7.16.

Design Consideration

(1) The structural stability and deformation requirements are determined to ensure no loss of function under accident and safe shutdown earthquake loads.

(2) The ice baskets are designed to facilitate maintenance and for a lifetime consistent with that of the unit.

(3) The structure is designed to maintain the ice in the required array to maintain the integrity of performance of the ice condenser. In particular, the hydraulic diameter and heat transfer area are maintained within the limits established by test to be consistent with the containment design pressure.

(4) Any section of the ice basket is capable of supporting the total weight of the ice above that section.

General Thermal and Hydraulic Performance Requirements

The ice baskets are fabricated from perforated sheet metal which has open area to provide sufficient ice heat transfer surface. The adequacy of the design and the performance were confirmed by test.

Interface Requirements

(1) Lattice Frame

The lattice frames at every 6-ft act as horizontal restraints along the length. The design provides a nominal 1/4-in. radial clearance between the ice baskets and the lattice frames.

Lattice frame and basket coupling elevations coincide to prevent damage to the basket during impact.

(2) Lower Support Structure

Ice basket bottoms are designed to be supported by and held down by attachments to the lower support structure. The basket supports are designed for structural adequacy under accident and safe shutdown earthquake loads and permit weighing of selected ice baskets.

(3) Basket Alignment

The ice condenser crane aligns with baskets to facilitate basket weighing and/or removal. The baskets are capable of accepting basket lifting and handling tools.

(4) Basket Loading

The ice baskets are capable of being loaded by a pneumatic ice distribution system. The baskets contain a minimum of 2.125×10^6 pounds of ice.

(5) External Basket Design

The baskets are designed to minimize any external protrusions which would interfere with lifting, weighing, removal and insertion.

(6) Basket Coupling

Baskets are capable of being coupled together in 48-foot columns.

(7) Basket Couplings and Stiffening Rings

Couplings or rings are located at 6-ft intervals along the basket and have internal inserts to support the ice from falling down to the bottom of the ice column during and after a DBA and/or SSE.

Design and Test Loads

The minimum test and basic design loads are given in Table 6.7-2.

6.7.4.2 System Design

The ice condenser is an insulated cold storage room in which ice is maintained in an array of vertical cylindrical columns. The columns are formed by perforated metal baskets with the space between columns forming the flow channels for steam and air. The ice condenser is contained in the annulus formed by the containment vessel wall and the crane wall circumferentially over a 300° arc.

The ice columns are composed of four baskets approximately 12 feet long each, filled with flake ice. The baskets are formed from a 14 gage (.075) perforated sheet metal, as shown in Figure 6.7-8. The perforations are 1.0 in. x 1.0 in. holes, spaced on a 1.25-inch center. The radius at the junction of the perforation is 1/16 inch. The ice basket material is made from ASTM-569 which is a commercial quality, low carbon steel. The basket component parts are corrosion protected by a hot dip galvanized process. The perforated basket assembly has an open area of approximately 64% to provide the necessary surface area for heat transfer between the steam/air mixture and the ice to limit the containment pressure within design limits. The basket heat transfer performance was confirmed by the autoclave test.

Interconnection couplings and stiffening rings are located at the bottom and 6-ft. levels, respectively, of each basket section. The bottom coupling and stiffening ring are cylindrical in shape and approximately 3 inches high with a rolled internal lip. The lip provides stiffening to the basket and a stop for the cruciforms at 6 feet intervals. These cruciforms prevent the ice in the basket from displacing axially in the event of loss of ice caused by sublimation or partial melt down due to accident conditions. These couplings are attached to the ice basket by locking sheet metal screws and basket detents.

The baskets are assembled into the lattice frames to form a continuous column of ice that is 48 feet high. The bottom wire mesh is designed to allow water to flow out of the basket and has attachments for mechanical connection to the lower support structure to prevent uplift of the ice baskets during SSE and DBA. The lattice frames provide only lateral ice basket support at intervals corresponding to the stiffened ice basket sections. The vertical loads of the ice and ice basket is transmitted by the basket to the lower support structure. The attachment between the ice basket and the lower support structure is disengaged to permit weighing of the baskets. The columns of ice can be lifted and removed in sections, and provision is made for lifting and weighing the whole length of selected columns for surveillance purposes.

Fabrication

The fabrication steps are as follows:

(1) The sheet metal is purchased in the hot-rolled and pickled condition.

(2) The perforator oils and perforates the material and ships to the basket fabricator.

(3) The basket fabricator rolls the perforated metal into a cylindrical shape 12 inches in diameter by 141.57 or 143.25 inches long (for bottom basket or upper basket respectively) and material is degreased.

(4) The sides of the rolled cylinder are continuously welded using the gas metal arc process.

(5) Following the welding the cylinder is pickled, washed, fluxed, hot dip galvanized, and dipped in a sodium dichromate bath.

(6) The couplings and stiffening ring blanks are cut from sheets or coils of hot rolled, pickled and oiled material. These are formed by a rolling process and are 3 inches high with a roll-formed internal lip and are of a diameter to fit inside the perforated basket.

(7) The cruciforms are die-formed from steel strip.

(8) Following the forming operations, stiffeners and couplings with cruciforms in place are pickled., washed, fluxed, hot dip galvanized, and dipped in a sodium dichromate bath.

(9) The column bottom is fabricated by a procedure similar to Item 6 above. The appurtenances are welded in place and the piece is galvanized per Item 8 above.

(10) The remaining appurtenances are cut to size, machined, welded where required, followed by galvanizing as above, and plated where required.

(11) The completed couplings, bottoms, appurtenances, stiffening rings and cylinders are next assembled. The stiffening rings are inserted inside the cylinder until the side is adjacent to the 2.5-inch upperforated area in the center of the cylinder and attached by a self-drilling, self-tapping, locking machine screw and four basket detents.

(12) For the column bottom, two U-bolts and nuts and washers fasten the mounting bracket assembly to the plate of the basket end.

(13) The bottom is inserted into the cylinder until the cylinder rests against the step of the bottom and is attached mechanically by 12 self-drilling, self-tapping, locking machine screws.

(14) For the upper baskets, the couplings are inserted in the cylinders approximately 1-1/2 inches and attached with 12 screws as above.

(15) All welding and inspection is performed in accordance with AWS publication D1.1-72, including latest revisions.

Installation

The completed baskets are placed in the lattice frames from the top deck by first lowering a bottom basket into the lattice frames and locking in place, extending approximately 2 inches above the top lattice frame. The second upper basket is lifted with the crane and gripper fixture and placed on top of the bottom basket inserting the coupling into the top of the bottom basket and attaching with, self-drilling, self-tapping screws.

Next the locking or holding fixture is released and the two baskets lowered until the top is approximately 2 inches above the lattice frames as above. The third and fourth baskets are installed in the same manner as the second.

When the full column is assembled and ready to set on the lower support structure, the bolts and mounting bracket are loosened and the column lowered to facilitate alignment of the yoke with hole in the support structure. After alignment and insertion of the clevis pin, the 4 bolts are tightened. A hitch pin cotter is inserted to retain the clevis pin.

Materials

The listing of acceptable materials for the ice basket are presented in Section 6.7.18.

6.7.4.3 Design Evaluation

Basket Evaluation

The perforated metal baskets, manufactured from A-569 low-carbon 14-gage sheet with 1.0-in. by 1.0-in. holes on 1.25-in. centers, are evaluated by analyses and tests and found to be within the allowable limits defined in Section 6.7.16. Three different methods are used in determining basket adequacy. The first method employs classical strength of materials techniques, the second uses limit analysis, and the third confirmed the basket integrity by tests.

Stress Analysis

This method considers the ice basket as being composed of a number of line (vertical basket element) and stay (circumferential basket element) elements and the collapse of the ice basket may be precipitated by the local yielding and/or buckling of the individual line elements.

When the basket is loaded both axially and laterally as a beam, the line elements are subjected to axial compression, a lateral shear and a bending load. This combined stress state can possibly lead to local yielding, plastic collapse, line element buckling and ultimately to structural failure. All these modes of possible failures are analyzed and the results are found to be within the allowable criteria. Analysis indicates that the critical line element buckling load is about 77,000 lbs. The maximum vertical load, D + SSE is 2753 lbs. Therefore the possibility of elastic buckling is remote. For a case with only lateral load, the analysis indicates that a factor of safety 3.15 exists between the allowable basket load and the maximum lateral load that exists. A summary of stresses is tabulated in Table 6.7-3. For the various design cases considered, it is seen that the design stress is always below the allowable stress.

Analysis was also made of the case where the ice melts out so that it occupies only one-half side of the basket. The eccentricity would be 3 inches, but the ice mass would be halved, giving a shear stress of 450 psi. This gives a combined maximum shear stress of 3850 psi, again, well below the allowable.

Limit Analysis

Limit analysis is performed on the ice basket in order to determine by analysis the lower bound collapse load when the basket is simultaneously loaded in the axial and lateral directions. The following modes of failure are considered:

(1) Plastic collapse of the compression side,

(2) Shear yield of the neutral plane.

A summary of the combinations of concentric axial load and distributed load that causes basket failure is presented in Figure 6.7-9. Also superimposed in this figure is the design and test load envelope.

Ice Basket Appurtenance Evaluation

The ice basket connections are analyzed to ensure structural integrity during all design load combinations of dead weight, operating basis earthquake, safe shutdown earthquake, and design bases accident. The primary area of concern is the ice basket to lower support structure connection. This area is shown in Figure 6.7-8. The item, material and minimum yield stress are presented in Table 6.7-4. The allowable stress limits for D + OBE, D + SSE, and D + SSE + DBA are tabulated in Tables 6.7-5 through 6.7-7 respectively. The loads used in the analysis of these parts envelop minimum design loads plus load factors necessary for the Watts Bar analysis.

Clevis Pin

The clevis pin transmits the ice basket loads to the lower support structure through a 1-inch x 2-inch bar welded to the top of the structure. A minimum clearance of 1/16 inch is provided both vertically and horizontally to provide a pinned connection, thereby eliminating the transfer of any moment to the structure resulting, from basket deflection because of horizontal loads.

The stresses on the 1/2-inch diameter pin are tabulated in Table 6.7-8.

Column Bottom Mounting

The mounting bracket is attached to the basket bottom as shown in Figure 6.7-8. The design loads are transmitted through the mountings and clevis pin from the ice basket bottom.

The stresses in the mounting bracket, plates and bolt are tabulated in Tables 6.7-9 through 6.7-11, respectively.

Ice Basket End

The column bottom is shown in Figure 6.7-8. The loads that are transmitted through the clevis pin assembly are distributed to the ice basket through the rigid plate and the cylindrical ice basket end section. Wire mesh is used to contain the ice and to provide drainage for water. The stress summary for the ice basket end is shown in Table 6.7-12.

The intermediate ice basket coupling screws were also analyzed and the results of the analysis are given in Tables 6.7-13 through 6.7-16 and indicate that they are structurally adequate for maximum loading conditions defined in Section 6.7-16.

6.7.5 Crane and Rail Assembly

6.7.5.1 Design Basis

Function

The crane and rail assembly is designed to carry components and tools into, out of, and within the ice condenser area during erection, maintenance, and inspection periods.

Criteria and Codes

The crane is designed in accordance with the requirements of the Electric Overhead Crane Institute Specification 61. It is designed so that under all loadings it is not derailed.

The rail is designed according to Section 6.7.16. These criteria provide assurance that the rail maintains its structural integrity.

Design Conditions

The service temperature range is 15°F to 100°F.

During unit erection, two cranes can be used in the ice condenser region, each carrying up to 6,000 pounds. A separation of at least two bays is maintained between their centers. Prior to installation of air handling units, one crane is removed. The heaviest load actually expected after this time is less than 2,500 pounds. The crane remains normally parked (without load) outside the ice condenser while the reactor is at power. The crane and supporting structure are designed to withstand dynamic loading during operating modes specified above.

The design loads for the crane are presented in Table 6.7-17.

6.7.5.2 System Design

The design of the 3-ton capacity crane is shown in Figure 6.7-10. The bridge, boom, and hoist of the crane are all motor operated. The bridge speeds are approximately 38 and 110 feet per minute. The boom member is capable of rotating 360° in either direction at a speed of approximately 2 revolutions per minute. The electric hoist is mounted on the boom member with two stainless steel cables reeved over two sheaves mounted on the boom and around two sheaves on the hook block assembly. The hoist provides approximately 71 feet of lift at speeds of 7 and 20 feet per minute. It is equipped with an upper and lower limit switch to ensure that the cables will not completely unwind from the hoist drum. The hoist automatically switches to low speed approximately 2 feet below the highest point of travel.

The total crane weight is approximately 7200 pounds.

The predominant material of construction is A36 steel. The main structural members are painted to prevent corrosion.

The crane travels on two circular rails that run through the ice condenser area as shown in Figure 6.7-11. The circular diameters of the rails are 95 and 109 feet. The top flange plate and rail section are continuously welded to the web plate under controlled conditions. The top flange and web plates are A-441 steel heat treated and normalized, fine grain practice, and the lower rail section is special analysis steel with a hard non-peening rolling surface.

6.7.5.3 Design Evaluation

The crane rails and supporting structures are analyzed as a part of the top deck structure (see Section 6.7.10). All stresses were maintained within limits prescribed in the design criteria, Section 6.7.16, for all design conditions defined in Section 6.7.5.1.

6.7.6 Refrigeration System

6.7.6.1 Design Basis

Function

The refrigeration system serves to cool down the ice condenser from ambient conditions of the reactor containment and to maintain the desired equilibrium temperature in the ice compartment. It also provides the coolant supply for the ice machines during ice loading. The refrigeration system additionally includes a defrost capability for critical surfaces within the ice compartment.

During a postulated loss-of-coolant accident the refrigeration system is not required to provide any heat removal function. However, the refrigeration system components which are physically located within the containment must be structurally secured (not become missiles) and the component materials must be compatible with the post-LOCA environment.

Design Conditions

(1) Operating Conditions

See individual component sections:

(A) Floor cooling - Section 6.7.1

(B) Air handling units (AHUs) - Section 6.7.7

(2) Performance Requirements

(A) The mandatory design parameters that relate to refrigeration performance are:

(i) Nominal initial total weight of ice in columns3.0×10^6 lbs

(ii) Minimum total weight of ice in columns2.125×10^6 lbs

(iii) Nominal ice condenser cooling air temperature10°F - 15°F

(B) The design must also provide a sufficiently well-insulated ice condenser annulus such that, with a complete loss of all refrigeration capacity, sufficient time exists for an orderly reactor shutdown prior to ice melting. A design objective is that the insulation of the cavity is adequate to prevent ice melting for approximately 7 days in the unlikely event of a complete loss of refrigeration capability.

(C) The not-directly-safety-related design-objective parameters are:

(i) Ice Sublimation

Ice sublimation and mass transfer is reduced to the lowest possible limits by maintaining essentially isothermal conditions within the ice bed and by minimizing local temperature gradients. A design objective is to limit the sublimation of the ice bed to less than 2% per year by weight. The normal steady-state sublimation appearing on the wall panels as frost is calculated to be significantly less than the total design objective. Calculations incorporating both radiative and convective modes of heat transfer result in a sublimation rate of less than 0.3% per year to the wall panels.

(ii) An appropriate combination of refrigeration capacity and insulation capability is achieved to permit the following:

(a) Maintain the average ice bed temperature in the range of 10° to 15°F under the most adverse non-accident conditions.

(b) Cool the ice condenser down to 15°F in 14 days (initial cooldown prior to ice loading).

The ice condenser is structurally designed to withstand the various extreme loading parameters including DBA + SSE. The ice condenser design and the reactor containment supporting walls are analyzed for heat transfer through the boundaries of the ice condenser. The configuration and sizing of the cooling components is then determined to achieve the various design requirements.

One of the most important design criterion for the ice condenser is that the insulation must maintain the ice condenser chamber below 31°F for a significant period of time given that a malfunction or failure of any refrigeration component has occurred. Most system anomalies can be remedied during this period. For any repair which would require more time, a scheduled reactor shutdown can be completed in a safe and orderly fashion. Eliminating the "emergency factor" from the operation of the refrigeration system places the performance of the refrigeration components in an operational category without mandatory safety related design requirements.

6.7.6.2 System Design

The refrigeration system serves as a central heat sink for sensible heat and heat of fusion picked up, respectively, in the ice condensers and in the ice machines. A

circulating system of ethylene glycol solution carries the heat from the various heat transfer surfaces to the chiller packages. Cooling of the ice condenser is achieved by a three stage system:

First stage - Refrigerant Loop
Second stage - Glycol Loop
Third stage - Air Cooling Loop

First Stage - Refrigerant Loop

Five 50 ton chiller packages are installed in the unit. Each package consists of two separate 25 ton compressor units, individually operable. See Figure 6.7-12 for refrigerant cycle diagram. Ethylene glycol solution is cooled during its passage through the evaporator, and heat is removed from the chiller unit by cooling water flowing through the condenser. The condenser cooling water is provided from the non-essential service water system. The chiller units operate individually to maintain outlet temperature of ethylene glycol at -5°F, nominal.

Refer to Table 6.7-18 for chiller package parameters such as operating temperatures, flow rates, pressure drops, rating basis, etc.

Second Stage - Glycol Loop

The second cycle (Figure 6.7-13) carries the heat removed from the ice condenser air handling units, the floor cooling system and the ice machines (when operating) to the refrigerant cycle evaporator/cooler units. The liquid circulating, through this cycle is a corrosion inhibited 50% ethylene glycol solution. It is compatible with most common piping materials and standard gasket and packing materials. Piping and valve materials used in this loop are predominantly carbon steel with stainless or alloy trim. Diaphragm valves are provided with ethylene propylene diaphragms. Piping and equipment carrying chilled ethylene glycol solution are covered with low temperature thermal insulation.

Six glycol circulating pumps (four operating and two on standby) are provided to convey the cooled glycol from the eight refrigeration units (six normally operating and two on standby) to the air handling packages (30 per containment) and to the ice compartment floor cooling system of each containment. The design includes provisions for interconnecting the chiller packages and pumps, as required. The heated glycol is then returned to the refrigeration units thereby completing the glycol loop. The heat is extracted from the air in its passage through the air handlers and from the floor cooling system. Two rows of air handlers located along inner and outer walls are served by respective glycol supply and return headers. The return headers are connected to a vented expansion tank located above the upper deck in each unit. Pairs of containment isolation valves are installed on supply and return lines on both sides of containment penetration. Closure of these valves in response to a T-signal* isolates the ethylene glycol piping inside the containment vessel from the external refrigeration system. In the event of a LOCA, the glycol heats up from approximately -5°F or 0°F to the containment accident temperature and expands harmlessly into the expansion tank. The liquid trapped between a pair of isolation valves is relieved

around the inner isolation valve through a bypass line via a small check valve. The bypass line also contains test connections for periodic leak testing of the isolation valves and the check valve.

The ice condenser floor is kept cold by chilled glycol solution circulating through pipe coils embedded in the concrete wear slab (see Section 6.7.1 for floor cooling diagrams). During normal operation, one floor cooling pump feeds a circular header, which distributes the coolant to individual coils located in each bay. A second circular header returns the flow to pump suction.

The glycol solution is maintained at the proper temperature by continuously bleeding solution out of the system and feeding cold solution into it at the same rate. The cold solution is taken from the glycol stream returning from the air handling units to the external refrigeration system. The bleed flow is sent back into the same line downstream of the feed connection. Feed and bleed flow is maintained by the same pump that drives solution through the coils. Bleed flow rate is regulated by a temperature control valve. A second pump is available for use while pump No. 1 is being serviced. A manual throttling valve bypassing the temperature control valve can perform the latter's function during brief maintenance periods.

Floor temperature is generally maintained between the temperatures of the ice bed and the wall panels. There should, therefore, be essentially no frosting on the floor surface. It is necessary, however, to heat the floor above 32°F any time the wall panels are being defrosted in order to keep the water melting off the wall panels from freezing to the floor. At this time, the floor is heated with warm glycol. After defrosting is completed, the system is restored to its normal cooling status. The defrost cycle is relatively brief and its effect on the ice bed is negligible.

Components requiring periodic maintenance (pumps, heater, control valve) are located in the upper compartment. The cooling coils in the concrete wear slab rest on a steel plate to effectively intercept heat passing up through the floor. The coils are made of heavy steel pipe to minimize chances of developing a leak by gradual corrosion of pipe material. Should a leak develop, any individual loop can be isolated by closing two valves inside the lower region of the ice condenser.

Table 6.7-18 has additional detailed parameters for the glycol cycle components.

Third Stage - Air Cooling Loop

The ice condenser compartment is designed to be kept below the freezing point throughout the life of the unit. It is cooled to 15°F prior to ice loading and kept at that temperature indefinitely, barring occurrence of a loss-of-coolant accident, extensive failure of the refrigeration system, or permissible excursion during ice loading. Ice bed temperature is maintained at the specified level by means of chilled air circulating through the boundary planes of the compartment. Starting in the upper plenum, which constitutes the top boundary, air enters one of 30 air handling packages located in the plenum. The air handler cools the air the blows it down through a series of insulated duct panels lining the inner, outer and end walls of the ice condenser. When the air reaches the lower support structure at the inner wall or end walls or the floor level at

the outer wall, it turns back up to the plenum through a parallel path in the wall panels. See Figure 6.7-14 for a schematic flow diagram of the air cooling cycle.

---

*Containment isolation signal, Phase A, derived from safety injection or manually.

The air handling units are designed to provide a discharge or duct entrance air temperature of 10°F by means of an individual temperature controller for each air handler. A temperature sensor is located in the cold air stream of each air handler outlet which signals a modulating valve to control the glycol flow for that air handling unit. When an increase in exit air temperature is sensed, the valve opens to increase the glycol flow through the coil, which in turn lowers the exit air temperature.

The air handling units are designed for automatic self-defrost operation. The self-defrost cycle is initiated by a timer set to initiate defrosting at intervals to ensure less than 2/3 occlusion of the air passage across the cooling coils. The timer switch completes a circuit to the fans, through a relay, which in turn allows gravity closure of the damper in that air handler. A circuit is also completed to the power-operated valve of the air handling unit, stopping glycol flow through the coil. When the air damper closes, a limit switch is activated which initiates closure annunciation in the control room. The self defrost cycle is terminated by the timer upon completion of the defrost cycle (about 30 minutes). In addition to the coil defrost heaters mounted on the face of the coil, each unit has a drain pan heater and a condensate drain heater. These heaters prevent refreezing of the coil defrost water during the defrost cycle. Over-temperature protection is provided by a high temperature thermostat set to disable the defrost heaters if the fan box temperature reaches 180°F. This high temperature limit switch must be manually reset.

Provisions also exist for defrosting the wall panels by circulating heated air through the wall panels. The structural function and capabilities of the air cooling cycle components are discussed in the following sections:

(1) Air handling unit - Section 6.7.7

(2) Wall panels - Section 6.7.2

(3) Air distribution ducts - Section 6.7.12

Table 6.7-18 has additional parameters for the air handling units.

6.7.6.3 Design Evaluation

The refrigeration system is sized to maintain the required ice inventory even under worst-case operating conditions. The chiller package total capacity is sufficient to maintain both ice condensers. Worst-case conditions are:

(1) Lower containment air temperature 120°F

(2)	Upper containment air temperature	110°F
(3)	Equipment room air temperature	120°F
(4)	Exterior containment wall design air temperature	110°F

Items 1 and 2 are limits stated in the Technical Specifications. Item 4 is the design dry-bulb temperature in the region of Tennessee where the Watts Bar units are located for a 50 year hot summer, plus an additional margin of 9°F. The 1% factor is defined such that only 1% of the time the dry-bulb temperature during the summer months is above the specified temperature for a 50 year hot summer. Data was obtained from ASHRAE climatic guide for cooling and heating design conditions. For an average summer, the 1% design dry-bulb temperature is 96°F and, for a 50 year hot summer, is 101°F. The average (4 quadrant) sol-air temperature for vertical walls corresponding to a maximum dry-bulb temperature of 95°F is about 107°F.

The major thermal boundaries of the ice condenser, including the floor, cooled walls with ducts, lower inlet doors, and top deck support beams are analyzed using a Westinghouse-developed computerized technique, TAP-A, (or TAP-B), which is a program for computing transient or steady-state temperature distributions (WANL-TME-1872, Dec. 1969, Subcontract NP-1).

The TAP-A program is applicable to both "transient and steady-state heat transfer in multi-dimensional systems having arbitrary geometric configurations, boundary conditions, initial conditions, and physical properties. The program can be utilized to consider internal conduction and radiation, free and forced convection, radiation at external surfaces, specified time dependent surface temperatures, and specified time dependent surface heat fluxes."

The solution of the general heat conduction equation is determined with finite difference techniques. The program solves the equation as determined for the particular finite element or nodal model set up, either explicitly or implicitly. All cases studied for the ice condenser are solved implicitly.

The TAP-B program is a variation of TAP-A but includes fluid coupling to the finite element model. The TAP-B variation used to analyze the cooled wall panels. Since the duct air temperature distribution is included in the model it is possible to evaluate the temperature distribution of the surface of the wall panel facing the ice condenser over the complete length of the duct.

The wall panel heat load comprises about 60% of the total heat load, through the thermal boundaries with the inner surface area of the wall panels covering just under 30,000 ft^2.

The wall panel model for the crane wall is 48 feet long, with 8 axial stations, each 6 feet in length. The width of the model covers the region from the centerline of the duct region to the centerline of the lap strip region.

There are approximately 1,000 interior and surface nodes for the 48-foot length of the model which consists of half of a duct section.

Roughly 70% of the thermal load through the wall panels flows through the mounting brackets (or about 50% of the total thermal load of the ice condenser). The cold boundary temperature of the model was assumed to be 12°F in the ice bed with a 10°F duct entrance temperature.

The basic floor model utilizes TAP-B. The basic floor design is analyzed with fluid coupling. The results of the basic model justify the design concept. Variations in the basic floor are checked by hand calculations for overall thermal load. The basic floor model is comprised of approximately 120O nodes in 5 layers and covers one quarter of a typical floor bay, of which there are 24 bays. The air temperature over the floor is assumed to be 15°F. The temperature of the glycol boundary is calculated for each fluid node. Over 90% of the heat entering the floor region is found to be removed by the floor cooling system. Use is made of the transient capabilities of the program to determine the defrost or warmup time required when the glycol is heated. The heat transfer through the top surface of the floor is in two directions, both into and out of the wear slab. The net flow from the top surface to the ice condenser chamber is about 1000 Btu/hr. About 75,000 Btu/hr total is absorbed by the floor glycol coolant using the basic model.

The lower inlet door region while not contributing significantly to the overall thermal load on the refrigeration system is extremely important when considering sublimation. Various models of portions of the door are postulated to determine effective means of limiting the heat flux through the lower inlet doors.

The total heat load through doors with appropriate insulation is maintained at less than 11,000 Btu/hr to the ice bed. The door assembly is analyzed in two segments. There are 24 complete 2 door assemblies in the ice condenser. The first door model covers the region from the centerline of one door panel to the central seal region. Hand calculations are used to determine the nature of the convection between the two door panels in the central seal region, and in the outer hinge region. The information on the type of convection present is necessary to be gained from positioning flaps or boots around the door perimeter. Flaps are not considered necessary in the door center because the convection is determined to be laminar with air conduction dominating. The central door model contains about 150 internal nodes including insulation. The second region covered by a model is the hinge region. The hinge model is 15 inches deep (about 1/6 of the door length) and includes effects of the reinforcement channels along the full width of the door. The extremities further away from the hinge region are only grossly modeled. There are a total of 168 internal nodes in the "hinge" model including a protective boot around the hinge. The hinge model also includes effects of the pillar in the crane wall upon which the door is mounted. The hinge region is of major importance in contributing to the internal thermal load with most of the heat input coming from the massive concrete pillar. It is necessary to protect the hinges with boots to limit the convective heat transfer which is quite effective in reducing the heat flow.

The top deck support beams are similarly modeled using TAP-A. The beams are a major source of thermal load in the plenum are thermal boundaries but only a small

fraction of the total thermal load on the air handlers (not including air handler motor heat).

The modeling required for analysis of the components is extensive and detailed. The admittance of each node and connection; involving the determination of the length, volume, and area of each element was conservatively estimated where simplification of the model was required. The models are realistic since sufficient detail was considered and all significant modes of heat transfer were considered. Hand calculations backup all major assumptions used to arrive at a model.

The summation of the thermal analysis gives a total nominal thermal load of 36 tons or 432,000 Btu/hr.

The breakdown is listed below. The values given are considered to be nominal expected loads. Design change required as a result of change in air distribution duct configuration or other design re-evaluations would, of course, change the final summation. The final thermal load is still maintained at the same level consistent with stated refrigeration requirements.

	Btu/hr (10^4)
Wall panels	29.2
Plenum and Top Deck	10.11
Leakage 50 cfm	1.1
Lower inlet doors	2.0*
Floor	10.0
End walls	1.17
Total thermal load	53.58

The calculated heat loads show that a heat gain of 432,000 Btu/hr per containment may be expected from thermal boundaries of the ice condenser. Additionally each air handling unit fan motor generates less than 6,000 Btu/hr (subtotal 30 AHU x 6,000 Btu/hr = 180,000 Btu/hr) based on 30 operating air handlers with a design allowance of 1.5 in. of H_2O over the air delivery system. The floor cooling system, including pump heat, has a heat gain of 90,000 Btu/hr nominal.

The circulating pumps (2 operating) add a total of 100,000 Btu/ hr. The piping is estimated to pick up 7,000 Btu/hr. Therefore a chiller package capacity of about 800,000 Btu/hr per containment (base load) is required. Since this is a dual unit application and the chiller packages serve both units, the total chiller package capacity was chosen to be three (3) times the base load which is 2,400,000 Btu/hr. Since each chiller package is rated nominally at 600,000 *Btu/hr depending on cooling water temperatures, four chiller packages are required.

The refrigeration system is designed for maximum flexibility. The six circulating pumps and ten chiller units (5 packages) have been provided with two sets of piping manifolds to conduct ethylene glycol solution into and out of any combination of these components. Consequently, the associated systems can be refrigerated from the

central source with a minimum of interaction, and a high degree of redundancy is available for normal unit operation.

The six circulating pumps (4 operating, 2 standby) are conservatively sized to deliver the required coolant to each unit. Two standby pumps are included in the design to assure adequate

---

* Calculated Load < 1 x 10^4 Btu/hr
Design Allowance = 2 x 10^4 Btu/hr(includes miscellaneous items in addition to door load.)

cooling solution flow even in the event of a pump failure. Similarly the air handling units are conservatively sized to handle the worst case cooling load. Thirty air handling packages are installed based on a 10/7 ratio of installed capacity to base load.

The ice bed is sufficiently subcooled and insulated so that even a complete breakdown of the refrigeration system, or of all air handlers, does not permit the average temperature of the ice bed to rise above the melting point of the borated ice for a period of approximately one week. Anomalous conditions in the ice condenser are indicated by alarm annunciation from expansion tank level switches, the temperature monitoring system, or the door position monitoring system. Refer to Section 6.7.15 for a discussion of the ice condenser instrumentation system.

If one bay in the floor is not cooled because the glycol flow has to be isolated from that bay, the heat load from that bay is about 4,500 Btu/hr. The additional sublimation rate would be under 0.35% per year per bay. It would be expected that one bay would not be permitted to go uncooled for extensive length of time. Once an operational sublimation rate is established, it would not be unreasonable to assume that possibly three isolated, uncooled floor bays could be permitted to be uncooled for about 1 year. If the floor cooling system is shut off completely, it should be put back in operation as soon as convenient. An annual sublimation rate of about 5% per year will result with no cooling in the floor, which would require ice bed replenishing in 3 years.

6.7.7 Air Handling Units

6.7.7.1 Design Basis

Air Handling Units (AHU)

During normal operation the air handling units serve to cool the air and to circulate the cooled air through the panels in the ice condenser walls to keep the ice subcooled in the ice beds. Normal structural loads expected are dead weight, seismic, SSF and thermal loads. During an accident the AHU structure is designed to resist the normal structural loads plus SSE + DBA induced loads. Welding, welder qualification and weld procedures are in accordance with USASI B31.5 Refrigeration Piping and the ASME Boiler and Pressure Vessel Code, Section IX "Welding Qualification".

AHU Support Structure

(1) Function

The AHU support structure supports the air handling unit package under various design conditions which are detailed below.

(2) Design Criteria and Codes

Refer to Section 6.7.16

(3) Design Conditions

(A) Normal Operation

Deadweight loads due to AHU, structure	2500 lbs
Design temperature, min.	15°F

(B) Accident Conditions

Post-accident temperature (no uplift)	250°F

6.7.7.2 System Design

Air Handling Units

Each AHU is supported from its support structure, transmitting its major loads to top deck cross beams.

The air is drawn by each AHU from the upper plenum, is cooled in the AHU and is discharged into the air distribution header. The gross cooling capacity of each AHU package is 30,000 Btu/hr with the plenum air entering, at 19°F maximum and cooled by the AHU to 10°F nominal. Each package has a 2,200 cfm nominal air delivery capacity. The entering glycol mixture is at -5°F nominal temperature and the discharge glycol temperature is 1.0°F nominal. Electrical power is provided for fan motor and defrost heaters as well as for control circuits.

In order to limit seismically induced loads the AHU and supports are designed to have a natural frequency in excess of 20 Hz. All materials used in the AHUs are compatible with both normal and post-LOCA environments.

AHU Support Structure

The support structure supports the air handling unit vertically and tangentially from the cross beam of the top deck structure and is radially hinged from channels attached to the crane or containment wall. All parts are coated with a paint suitable for use inside containment. Figure 6.7-15 shows the design of the structure.

6.7.7.3 Design Evaluation

The pressure drop through the ducts and manifolds was estimated by using loss coefficients determined by using a standard reference[8] as a guide. The pressure drop through the air handlers was determined by test. The overall system flow rate was established by superimposing the system flow versus ΔP curve over the fan flow versus ΔP curve.

With the flow rate established the capacity of the air handlers was determined. First the air handler capacity was theoretically determined for a set of design conditions approximating operating conditions. Next the air handler units were tested by the manufacturer to the set of specified design conditions. It was determined that the theoretical relationships adequately predicted air handler performance and these techniques were then used to adjust the test values to those of actual operation. The gross operating capacity of one air handler is just under 30,000 Btu/hr by test and calculation.

The nominal heat load of 432,000 Btu/hr is adjusted by a factor of 10/7 to ensure adequate capacity under operating conditions for fouling, defrosting or isolated instances of one or several unit failures. Maintenance and inspection ensures reliable mechanical operation and cooling performance.

An estimate of the number of air handlers required is made to initiate the calculation, the flow pressure and rates drops are then calculated and the fan motor heat and heat transfer rates of the air handler unit predicted. The predicted performance is compared with the required capability and the calculation is reiterated varying the number of AHUs until the predicted performance just exceeds the required capability. The final number of required air handlers was determined to be 30.

A modal frequency analysis was performed for the air handling unit housings and support structure. The results indicate that the design frequency is approximately 20 Hz, so that the fundamental mode is well out of the frequency range of peak amplification on the response spectra. In the process of designing the structure on the basis of stiffness, strength of members subjected to various combinations exceeds specified limits by generous margins.

6.7.8 Lower Inlet Doors

6.7.8.1 Design Basis

Function

The ice condenser inlet doors form the barrier to air flow through the inlet ports of the ice condenser for normal unit operation. They also provide the continuation of thermal insulation around the lower section of the crane wall to minimize heat input that would promote sublimation and mass transfer of ice in the ice condenser compartment. In the event a loss-of-coolant accident causes a pressure increase in the lower compartment, the doors open, venting air and steam relatively evenly into all sections of the ice condenser.

The door panels are provided with tension spring mechanisms that produce a small closing torque on the door panels as they open. The magnitude of the closing torque is equivalent to providing approximately a one pound per square foot pressure drop through the inlet ports with the door panels open to a position equivalent to the full port flow area. The zero load position of the spring mechanisms is set such that, with zero differential pressure across the door panels, the gasket holds the door slightly open. This setting provides assurance that all doors will be open slightly, upon removal of cold air head, therefore eliminating significant inlet maldistribution for very small incidents.

For larger incidents, the doors open fully and flow distribution is controlled by the flow area and pressure drops of inlet ports. The doors are provided with shock absorber assemblies to dissipate the larger door kinetic energies generated during large break incidents.

Design Criteria

(1) Radiation Exposure

Maximum radiation at inlet door is 5 rad/hr gamma during normal operations. No secondary radiation due to neutron exposure.

(2) Structural Requirements

Refer to Section 6.7.16

(3) Loading Modes

(A) The door hinges and crane wall embedments, etc., must support the dead weight of the door assembly during all conditions of operation. Door hinges are designed and fabricated to preclude galling and self-welding.

(B) Seismic loads tend to open the door.

(C) During normal operations the outer surface of the door operates at a temperature approaching that of the lower compartment while the inner surface approaches that of the ice bed. During LOCAs, the outer surface is subjected to higher temperatures on a transient basis. Resultant thermal stresses are considered in the door design.

(D) During large break accidents, the doors are accelerated by pressure gradients then stopped by the shock absorber system. During small break accidents, doors open in proportion to the applied pressure with restoring force provided by springs. Upon removal of pressure, doors close as a result of spring action.

(4) Design Criteria - Accident Conditions

(A) All doors open to allow venting of energy to the ice condenser for any leak rate which results in a divider deck differential pressure in excess of the ice condenser cold head.

The force required to open the doors of the ice condenser is sufficiently low such that the energy from any leakage of steam through the divider barrier can be readily absorbed by the containment spray system without exceeding containment design pressure.

(B) Doors and door ports limit maldistribution to 150% maximum, peak to average mass input for the accident transient, for any reactor coolant system release of sufficient magnitude to cause the doors to open.

(C) The basic performance requirement for lower inlet doors for design basis accident conditions is to open rapidly and fully, ensuring proper venting of released energy into the ice condenser. The opening rate of the inlet doors is important to ensure minimizing the pressure buildup in the lower compartment due to the rapid release of energy to that compartment. The rate of pressure rise and the magnitude of the peak pressure in any lower compartment region is related to the confinement of that compartment. The time period to reach peak lower compartment pressure due to the design basis accident is approximately 0.05 seconds.

(D) Doors are of simple mechanical design to minimize the possibility of malfunction.

(E) The inertia of the doors is low, consistent with producing a minimal effect on initial pressure.

(5) Design Criteria - Normal Operation

(A) The doors restrict the leakage of air into and out of the ice condenser to the minimum practicable limit. The inlet door leakage has been confirmed by test to be within the 50 cfm total used for the ice condenser design.

(B) The doors restrict local heat input in the ice condenser to the minimum practicable limit. Heat leakage through the doors to the ice bed is a total of 20,000 Btu/hr or less (for 24 pairs of doors).

(C) The doors are instrumented to provide indication of their closed position. Under zero differential pressure conditions, all doors remain open by 3/8 inch.

(D) Provisions are made for adequate means of inspecting the doors during reactor shutdown.

(E) The doors are designed to withstand earthquake loadings without damage so as not to affect subsequent ice condenser operation for normal and accident conditions. These loads are derived from the seismic analysis of the containment.

(F) The door system provides a flow proportioning capability for small break conditions in accordance with Figure 6.7-16.

(6) Interface Requirements

(A) Crane wall attachment of the door frame is via bolts into embedded anchor plates with a compressible seal. Attachment to the crane wall is critical for the safety function of the doors.

(B) Sufficient clearance is required for doors to open into the ice condenser. Items to be considered in this interface are floor clearance, lower support, structure clearance and floor drain operation and sufficient clearance (approximately six inches) to accommodate ice fallout in the event of a seismic disturbance occurring coincident with a loss-of-coolant accident.

(C) Door opening and stopping forces are transmitted to the crane wall and lower support structure, respectively.

Design Loads

Pressure loading during LOCA is provided by the Transient Mass Distribution (TMD) code from an analysis of a double-ended hot leg break in the corner formed by the refueling canal, with 100% entrainment of water in the flow. For conservatism, TMD results were increased by 40% in performing the design analysis for the lower inlet doors.

The lower inlet door design parameters and loads are presented in Table 6.7-19.

6.7.8.2 System Design

Twenty-four pairs of inlet doors are located on the ice condenser side of ports in the crane wall at an elevation immediately above the ice condenser floor. General location and details of these doors are shown in Figures 6.7-17 through 6.7-21. Each door panel is 92.5 in. high, 42 in. wide and 7.5 in. thick. Each pair is hinged vertically on a common frame.

Each door consists of a 0.5 in. thick fiber reinforced polyester (FRP) plate stiffened by six steel ribs, bolted to the plate. The FRP plate is designed to take vertical bending moments resulting from pressures generated from a LOCA and from subsequent stopping forces on the door. The ribs are designed to take horizontal bending moments and reactions, as well as tensile loads resulting from the door angular velocity, and transmit them to the crane wall via the hinges and door frame.

Seven inches of urethane foam are bonded to the back of the FRP plate to provide thermal insulation. The front and back surfaces of the door are protected with 26

gauge stainless steel covers which provide a complete vapor barrier around the insulation. The urethane foam and stainless steel covers do not carry overall door moments and shearing forces.

Three hinge assemblies are provided for each door panel; each assembly is connected to two of the door ribs. Loads from each of the two ribs are transmitted to a single 1.572-inch diameter hinge shaft through brass bushings. These bushings have a spherical outer surface which prevents binding which might otherwise be caused by door rib and hinge bar flexure during accident loading conditions. The hinge shaft is supported by two self-aligning, spherical roller bearings in a cast steel housing. Vertical positioning of the door panel and shaft with respect to the bearing housing is provided by steel caps bolted to the ends of the shaft and brass spacer rings between the door ribs and bearings. Shims are provided between the shaft and caps to obtain final alignment. Each bearing housing is bolted to the door frame by four bolts, threaded into tapped holes in the housing. Again, shims are provided between the housings and door frame to maintain hinge alignment. Hinges are designed and fabricated to prevent galling and self welding.

The door frame is fabricated mainly from steel angle sections, 6 in. x 6 in. on the sides, and 6 in. x 4 in. on the top and bottom. A 4 in. central I beam divides the frame into sections for each door. At each hinge bracket, extensions and gusset plates, fabricated from steel plate, are welded to the frame to carry loads to the crane wall.

The door panel is sealed to the frame by a compliant rubber seal which attaches to channels welded to the door frame. During normal unit operations these seals are compressed by the cold air head of the ice bed acting on the door panels. As the seals operate at a much warmer temperature than the ice bed, frosting of the seal region is extremely unlikely.

Each door is provided with four flow proportioning springs. One end of each spring is attached to the door panel and the other to a spring housing mounted on the door frame. These springs provide a door return torque proportional to the door opening angle and thus satisfy the requirement for flow proportioning. In addition, they assure that the doors close in the event they are inadvertently opened during normal unit operations. The springs are adjusted during assembly such that, with no load on the doors, the doors are slightly open. For small door openings, the required 3/8-inch effective door opening is controlled by a 3/8 inch gap between panels and is, thus, independent of the door position as measured in degrees.

In order to dissipate the large kinetic energies resulting from pressures acting on the doors during a LOCA, each door is provided with a shock absorber assembly as shown in Figure 6.7-21. The shock absorber element is a sheet metal air box 93 in. high, 42 in. wide, and 29 in. thick at its thickest section. The air box is attached to a back plate assembly which is bolted to the ice condenser lower support structure.

Two edges of the sheet metal box are fastened to the ends of back plate by clamping bars and bolts, making them air tight joints. The sheet metal is bent such that it has an impact face and a prefolded side.

When the lower inlet doors open due to sudden pressure rise, they impact on the impact face of the air box. The impact face moves with the door. Because of a restraining rod within the box, the prefolded side of the air box collapses inwards. The volume of the air trapped in the air box decreases as the impact face moves towards the back plate, thereby increasing air pressure. Part of the kinetic energy of the door is used up in compressing air. To prevent excessive pressure rise, the air is allowed to escape through the clearance gap between the sheet metal and end plates. A portion of the energy of the doors is also dissipated in buckling of the stiffners.

Material

Door materials are consistent with the listing of acceptable materials as presented in Section 6.7.18. All exposed surfaces are made of stainless steel or coated with paint suitable for use inside the containment. All insulation material is compatible with containment chemistry requirements for normal and accident conditions.

6.7.8.3 Design Evaluation

The lower inlet doors are dynamically analyzed to determine the loads and structural integrity of the door for the design basis load conditions.

Using results from the computer program TMD (transient mass distribution) as input, the door dynamic analysis is performed using the "DOOR" Program. This computer program has been developed to predict door dynamic behavior under accident conditions. This program takes the door geometry and the pressures and calculates flow conditions in the door port. From the flow are derived the forces on the door due to static pressure, dynamic pressure and momentum. These forces, plus a door movement generated force, i.e., air friction, are used to find the moment on the door and from this are derived the hinge loads. Output from the program includes door opening angle, velocity and acceleration as functions of time, as well as both radial and tangential hinge reactions.

Analysis Due to LOCA

The net load distributions on the door for both opening and stopping are determined by considering the applied pressures acting on the door and then solving the rigid body equations of motion such that the net forces and moments at the hinge point are zero. In the process, this produces expressions for the inertial forces in the door and a hinge reaction as functions of the applied pressure.

The expressions for net load distribution are integrated to determine door shear and moment as functions of distance from the hinge point. The resultant load, shear and moment distribution curves and the total hinge loads, calculated by the "DOOR" Program, provides the inputs for subsequent stress analysis.

Using this input, the door assembly is analyzed as a stiffened plate structure with vertical bending being taken by the FRP outer plate and horizontal bending plus radial tensile loads being resisted by the steel ribs. Since inertial forces are directly accounted for in the analysis, no dynamic load factor was applied.

Hinge pin, hinge bracket, and frame stresses are analyzed under hinge reactions considering the effects of tension, shear bending, and torsion as appropriate. For these components, a dynamic load factor of 1.2 was calculated and applied.

Stresses in the flow proportioning springs are calculated considering dynamic effects as well as static ones. Welded and bolted connections are analyzed as part of the overall door, frame and hinge analysis.

All portions of the door and frame show factors of safety greater than one. The general acceptance criterion is that stresses be within the allowable limits of the AISC-69 Structural Code. This provides an additional margin of conservatism over the general ice condenser design criteria for D + DBA which permit stresses up to 1.33 times the AISC limits. For materials and components not covered by the Code, i.e., bearings, non-metallic materials, etc., conservative acceptance criteria are established on the basis of manufacturer's recommendations and/or engineering evaluations.

Flow proportioning characteristics of the door are evaluated by determining the door opening as a function of applied pressure. Assuming a triangular pressure distribution across the door, the flow area vs pressure at full door opening, is determined to be consistent with the curve shown on Figure 6.7-16. In addition the effects of door closure were evaluated assuming the pressure is suddenly released from a fully opened door and the door allowed to shut under the effect of the door proportioning springs. Stress levels in the door, gasket, and frame are found to be acceptable for this condition. In addition to the above analysis, full scale simulated blowdown tests have been performed on prototype door and shock absorber assemblies. These tests confirm the adequacy of these components at test levels up to 140% of maximum loading conditions predicted by the TMD Code.

Analysis of Seismic Load

Seismic analysis of the doors indicates that stresses are insignificant in comparison with those occurring during a LOCA. Under a SSE the doors could open several inches (actually, the crane wall will move away from the doors). At the termination of the earthquake, the doors immediately close and reseal under the effects of proportioning spring tension and the ice bed cold air head. Thus, any loss of cold air during a OBE or SSE is small and limited to a short period of time.

The dynamic testing of the air box shock absorber is discussed in Reference [13].

6.7.9 Lower Support Structure

6.7.9.1 Design Basis

Function

The lower support structure is designed to support and hold down the ice baskets in the required array, to provide an adequate flow area into the ice bed for the air and steam mixture in the event of a design basis accident, to direct and distribute the flow of air and steam through the ice bed, and to protect the containment structure opposite the ice condenser inlet doors from direct jet impingement forces.

The last two functions are accomplished by turning vanes that are designed to turn the flow of the air and steam mixture up through the ice bed in event of a design basis accident. For such an event, the vanes would serve to reduce the drag forces on the lower support structural members, reduce the impingement forces on the containment across from the lower inlet doors and to distribute the flow more uniformly over the ice bed. In addition to the turning vanes, the lower support structure has a continuous impingement plate around the outer circumference of the lower support structure, designed to reduce the jet impingement forces on the containment structure across from the lower inlet doors in the event of a design basis accident.

Design Criteria and Codes

The loading combinations, stress limits and material specifications used in the design of the lower support structure are given in Sections 6.7.16 and 6.7.18.

Design Conditions

The normal operating temperature range is 10°F to 25°F. The normal operational temperature change, including maintenance operations is 10°F to 70°F. The maximum temperature during a design basis accident is 250°F.

The loads used for the design of the lower support structure consist of dead weight (gravity), forces as a result of DBA, OBE and SSE seismic loads and loads as a result of thermal changes.

The dead loads include the weight of the crane wall insulated duct panels, the weight of the intermediate deck doors and frames, the weight of the lattice frames and columns, and the weight of the turning vanes. The weight of the ice baskets filled with ice, the slotted jet impingement plate assemblies and the door shock absorber, also act on the lower support structure.

Forces and loadings that occur during LOCA were provided by the Transient Mass Distribution (TMD) code from analysis of double-ended breaks in an end compartment, with 100% entrainment of water in the flow. For conservatism, all forces and loads that are a result of TMD were increased by 40% in performing the detail design and analysis for the lower support structure.

The lower support structure seismic design loads were developed using dynamic seismic analysis and the defined seismic response curves for the Watts Bar Nuclear Power Plant.

Thermal loading conditions, which result from two thermal excursions, were specified for the lower support structure. One thermal excursion from 10°F to 70°F is defined as a normal operating service load, and the other, defined as 70°F to 250°F, is the thermal excursion seen by the lower support structure following a LOCA.

The loading combination considered in the design are given in Section 6.7.16.

6.7.9.2 System Design

The lower support structure is shown on Figures 6.7-22 and 6.7-23. The lower support structure is contained in a 300° circular arc of the containment. The three-pier lower support structure consists of 24 horizontal platform assemblies, 24 upper turning vane assemblies, 24 floor turning vane assemblies and 24 impingement plate assemblies. The aforementioned assemblies are supported by 25 radial-portal frame assemblies with columns at radii of 45 feet-6 inches, 49 feet-11 3/4 inches, and 55 feet-8 1/2 inches. The 25 portal frame assemblies are spaced at approximately 12-1/2° between adjacent portal frames. The total height of the structure is 9 feet-7 7/8 inches, measured from the top surface of the lower support structure to the pin. The design is such that the flow area at the ice basket interface for all 24 bays is at least 1088 square feet.

The horizontal platform consists of an inner and outer platform assembly for each bay. As assembled, the platform includes inner, middle and outer straight circumferential beams which span each portal frame. Nine radial beams formed by bar sections are welded to the inner, middle and outer circumferential beam. There is horizontal cross bracing between the inner and middle circumferential beams and the outer and middle circumferential beams.

The outer horizontal platform assembly consists of nine radial beams welded to the outer circumferential beam and welded to a channel which forms one half of the middle circumferential beam. The inner horizontal assembly is similar to the outer platform assembly. The channels of the inner and outer horizontal platform assemblies are field bolted to form a continuous middle circumferential beam.

For each bay, the platform inner and middle circumferential beams are connected to the portal frames with a shear connection, i.e., no moment is transmitted to the columns. The outer circumferential beam is connected to the portal column, but the connection is designed to transmit moment about a vertical axis. Every alternate horizontal platform (per bay) is connected to the columns at one side by bolted connections, which are slotted along the axis of the circumferential beams to accommodate circumferential thermal expansion. The adjacent bay is not slotted in the circumferential direction and supplies the tangential shear resistance for the slotted bay.

There are nine radial beams in each portal bay and each radial beam supports nine ice basket columns. Provision is made for attaching, by bolting, each ice basket column to the radial beams.

The inner and outer circumferential beams of the platforms assembly have the lattice frame column supports bolted to them. The insulated duct panels on the containment wall interface the floor and the insulated duct panels on the crane wall are supported by the inner circumferential beams of the lower support structure.

Each radial portal frame is comprised of three columns. The primary radial shear resistance is provided by a 2 inch thick plate with attached welded channels forming the inner and middle columns thus forming a steel shear wall. The outer column

(radius 55 feet-9 1/2 inches) is attached to the middle column assembly by a 2 in. thick plate. The 2 in. thick plate is pin connected to the outer column by bars pinned at both ends and welded to the middle column. The column base plates are pin connected to the ice condenser support floor. To accommodate thermal expansion, the middle pier column pin connections are designed to allow radial expansion, and every other outer column base plate pin connection is designed to allow circumferential expansion. The inner pier columns (near the crane wall) are designed to transmit all three force components. The base plate pin arrangement is shown on Figure 6.7-22. The lower inlet door shock absorbers are mounted to the 2 in thick portal frame plate.

Tangential or circumferential rigidity of the lower support structure is provided by a cross bracing system between the outer columns. The cross bracing system is provided in alternate bays, which coincide with the bays in which the circumferential platform beams are not slotted in their axial direction at the column attachment points.

To turn, direct and distribute the flow through the lower inlet doors during a LOCA, each portal bay has five turning vanes that span between the adjacent radial portal frames. The vanes are as indicated on Figure 6.7-22. The vanes are slotted on one side in each bay to allow circumferential thermal growth.

In addition to the turning vanes, a beam gridwork spans between adjacent outer columns (Figure 6.7-22) and acts as a jet impingement shield for the fluid flow not turned by the vanes. The slotted plate assembly is provided in each bay of the lower support structure and is attached to the outer columns with a bolted connection. Similar to the turning vanes, the slotted plate assembly is bolted on one side with slotted holes to allow for circumferential thermal growth.

The material for the lower support structure is ASTM-A588 steel. Bolting materials are ASTM-A320 Grade L7 and nut material is ASTM-194 Grade 7. These materials conform to the design criteria discussed in Section 6.7.18. All welding meets the requirements of the American Welding Society Structural Welding Code-1973-AWS Publication DI.1-72.

The material used for the pins in the lower support structure is ASTM-A434 steel, E4340, Class BD. The material is normalized, then quenched and tempered. Chemical properties, physical test data and Charpy V-Notch test values at minus 20°F are required.

6.7.9.3 Design Evaluation

General

The lower support structure was analyzed using a finite element model. The ANSYS structural analysis program was used in the analysis. The seismic responses, in terms of equivalent acceleration and interface forces, in two horizontal directions (radial and tangential) and the vertical direction (z) were developed from a dynamic seismic response analysis performed for a combined lattice frame/ice basket/lower support structure model. The seismic loads, as well as loads due to dead weight, thermal and the forces due to DBA, were applied to the lower support structure as static forces.

Figures 6.7-24 and 6.7-25 show the finite element model used to represent the three pier lower support structure. The model is comprised of: three dimensional beam elements having six degrees of freedom per node; flat triangular shell elements, each having six degrees of freedom per node such that both membrane and bending action of the plates are considered; and general six degrees-of-freedom lumped masses having a 6 x 6 diagonal mass matrix with three values, Mx, My, Mz and three moments of inertia, Ix, Iy, and Iz. No horizontal ice mass is considered since this effect on the seismic response is accounted for in the results of the dynamic analysis of the combined lattice frames/ice baskets/lower support structure model. Rotary inertia terms are not used for the lumped masses.

Structural Representation

(1) General

Figure 6.7-24 shows an overall view of the one bay finite element model of the structural members. Each of the line members represents three dimensional beam elements. The loads generated from the model are used to design all the connecting joints to the AISC-69 Code, Section 2.8. A separate finite element model is used to determine the maximum stresses in the beams. The impingement plate which spans the chord between the two outer columns is modeled using equivalent beam elements.

At beam connections where the beam centroidal axes do not intersect, either rigid links or specified offsets, which can be automatically accommodated for ANSYS beam elements, are used to preserve geometric compatibility between the elements. The connections of the horizontal platform to the portal frame are considered to be pin connections except at the outer column line where it is assumed that a moment around a vertical axis can be transmitted.

The impingement plate is attached to the outer columns assuming no moment can be transmitted from the plate to the columns. Similarly, the upper and floor turning vanes are idealized as beam elements which are pin connected to the portal assemblies. The remaining structural connections are considered to be moment connections.

(2) Mass Distribution

(A) Structural Mass

The structural mass of the lower support structure is represented automatically in the ANSYS program through the use of consistent mass matrices associated with each of the structural finite elements. Thus, only the material density is input to account for the structural mass.

(B) Ice Mass

The mass of the ice baskets is represented as lumped masses at node points along each radial beam. The mass is distributed based on the geometric placement of the ice baskets on the radial beams. Only mass in the vertical, Z direction, is assigned to the lumped masses representing the ice baskets, since the horizontal seismic effect of the ice basket mass is incorporated as loads on the radial beams. The horizontal seismic loads are determined from a dynamic analysis of a combined wall panel/lattice frame/ice basket/lower support structure model.

(3) Displacement Boundary Conditions

Displacement boundary conditions are not specified for the tops of the column nor for other nodes contained in the column radial plane. However, forces are applied to the columns which account for the adjacent bay loading.

To accommodate the thermally induced loads in the structural members, the base plates of the two middle columns are free to expand in a radial direction. Likewise, to accommodate the circumferential thermal expansion, every other outer column base plate connection is free to expand circumferentially.

Referring to Figure 6.7-22, the above boundary conditions imply that the outer column bases at odd numbered column lines are restrained against motion in the vertical, radial and circumferential directions, while the outer column bases at even numbered column lines are free to displace circumferentially.

The middle columns are free to move in the radial direction at all column lines and the inside columns (near the crane wall) are restrained for all three translations at all column lines. These boundary conditions minimize the thermally induced stresses and floor loads.

Loading Conditions

(1) Seismic Loads

(A) General

Analysis indicates that the frequency of the lower support structure is sufficiently high relative to the peaks of the response spectra and is one mode dominant in the vertical direction, so that a seismic modal response analysis is not required. Instead, an equivalent static analysis was performed for vertical accelerations based on the assumption of one mode dominance. For horizontal seismic loads, the largest forces in the radial and tangential directions as determined from a dynamic analysis of combined ice basket/lattice frame/lower support structure moded are applied as static concentrated forces to the lower support structure. A schematic of the applied loads is shown in Figure 6.7-26.

(B) Horizontal Radial Excitation

To account for the seismic loads transmitted from the ice baskets, lattice frames, and lattice columns, a dynamic analysis of the lattice frame and ice basket structures coupled to the lower support structure by means of flexibility coefficient which represents the lower support structure is performed. The loads transmitted to the lower support structure at the interface between the lower support structure and the ice baskets are applied as static concentrated forces. To account for the seismic loads transmitted from adjacent bays, radial forces are applied to the model at the required nodes.

(C) Horizontal Tangential Excitation

The tangential loads transmitted from the lattice frames and ice baskets are determined in the same manner as the radial forces from the dynamic analysis performed.

The total tangential loads applied to the radial beams by the ice baskets are distributed in the same manner as the mass. Since the ice baskets are attached to the top surface of the radial beams, concentrated torques are applied at each of the nodes of the radial beams to account for the distance of approximately 6 inches from the top of the radial beam to the centroid of the cross section of the radial beam. The seismic loads from adjacent bays are considered by applying concentrated circumferential forces to the appropriate nodes.

(2) Blowdown Loads

(A) General

The blowdown forces applied to the lower support structure are divided into four classifications:

(i) Vertical Forces
(ii) Horizontal Radial Forces
(iii) Lower Inlet Door Impact Forces
(iv) Horizontal Tangential Forces

The following sections discuss the loads for each of the classifications and the application of the loads to the finite element model of the three pier lower support structure.

(B) Vertical Blowdown Loads

The vertical uplift loads acting on the lower support structure arise from the following phenomena:

(i) Uplift on the ice baskets
(ii) Uplift on the radial beams
(iii) Uplift on the horizontal platform bracing
(iv) Uplift pressure across the intermediate deck
(v) Uplift on lattice frames and lattice column

(C) Horizontal Radial Blowdown Forces

The horizontal blowdown forces acting on the structure arise from the following phenomena:

(i) Momentum forces on the middle circumferential beam turning vane.
(ii) Momentum forces on the upper three turning vanes attached to the middle column.
(iii) Momentum forces on the floor turning vane attached to the middle column.
(iv) Momentum loading on the slotted impingement plate.
(v) Forces on the outer circumferential beam.
(vi) Radial forces on the ice baskets.

The forces are transient in nature. However, only the basic static values with dynamic load factors applied to account for the transient nature of the loading have been applied to the structural model, as concentrated forces on the appropriate nodes. To account for forces from adjacent bays, concentrated loads were applied to the portal frame connection points, as required.

(D) Lower Inlet Door Impact Load

From results of studies and tests performed to determine the force-time history transmitted through the shock absorber which arrests the inlet door motion, a tangential load was applied to the lower support structure portal frame. The dynamic pulse characteristics of the force are accounted for by recommending a dynamic load factor of 2.0 for the pulse taken to represent the force versus time relationship for the shock absorber.

The door impact load is applied simultaneously in the same direction at both column lines 1 and 2 as a worst case. Thus, the loading considered is anti-symmetric tangential loading on the one bay model and creates an overturning moment about a radial axis through the lower support structure. In the design of the lower support structure, the bolt

connections between the columns and the circumferential beams are designed to consider the possible loading from the door impact loads being applied in apposite tangential directions on the door arrestor plates.

(E) Horizontal Ice Basket Forces

The tangential and radial forces acting on the ice baskets due to cross flow are assumed to act on the bottom, three feet of ice basket (one-half of the span between the top of the lower support structure and the attachment of the ice baskets to the first lattice frame). The loads are applied to the finite element model as uniformly distributed loads on each of the beam elements comprising a radial beam.

Dynamic Load Factors

(1) General

To account for the dynamic nature of the blowdown forces, dynamic load factors are applied to the DBA forces applied statically to the finite element representation of the lower support structure. The dynamic load factors (DLFs) are as follows:

(A)	Vertical Uplift Forces	DLF = 0 or 1.8
(B)	Horizontal Radial Forces	DLF = 0 or 1.2
(C)	Lower Inlet Door Impact Forces	DLF = 0 or 2.0
(D)	Horizontal Tangential Forces	DLF = $\pm$ 1.2

(2) Transient Analysis of Blowdown Loads

Following a LOCA, the inlet doors open admitting steam flow into the ice condenser chamber. The fluid flow through the lower support structure and upward through the ice bed cause time-dependent forces to be applied to the lower support structure. In general, there are four classifications of transient forces applied to the lower support structure: (a) vertical forces on the radial beams, ice baskets, lattice frames, lattice columns, and intermediate deck; (b) horizontal radial forces acting on the outer columns, the jet impingement plate, the outer circumferential beam, and turning vanes attached to the middle circumferential beam and middle column; (c) tangential forces, applied to the impact plates attached to the portal frames, resulting from arresting the motion of the inlet doors; and (d) tangential forces on the radial beams due to cross flow in the ice condenser compartment.

The dynamic load factors are determined by performing a transient response spectrum analysis for each force-time history, as described below.

(3) Single Degree of Freedom Representation

In general, the transient structural response of a multi-degree of freedom system is given by the expression:

$$y_i(t) = \sum_{j-1}^{N} r_j n_j(t) \psi_{ij} \qquad 1$$

where:

$y_i(t)$ is the structural response at any time (t).

$\psi_{ij}$is the jth mode shape of the structure.

$\Gamma_j$is the participation factor of the jth mode shape for the transient load.

$n_j(t)$is the generalized coordinate of the jth mode shape at any time (t).

The generalized coordinate nj of the jth mode is given in terms of the forcing function f(t) by Duhamel's integral, or the convolution integral as:

$$n_j(t) = \omega \int_0^t f(\tau) \sin \omega(t-\tau) d\tau \qquad 2$$

Thus, the expression for the generalized coordinate for each mode, j, is the same as the amplification factor, or dynamic load factor (DLF) definition for a single degree of freedom system:

$$DLF(t) = \omega \int_0^t f(\tau) \sin \omega(t-\tau) d\tau \qquad 3$$

Assuming that Γ_j = 1 for some j = k and Γ_j – 0 for j ? k, amounts to the assumption that only one mode dominates, in the structural responde to the transient. In this case, the structural response becomes:

$y_i(t) = n_k(t)\ \psi_{ik}$ (4)

or,

$y_i(t) = DLF(t)\ \psi_{ik}$ (5)

In which case the maximum structural response is given by:

$$y_{i_{max}} = DLF_{max}(\psi)_{ik} \qquad 6$$

Assuming that the dominant mode ψ_{ik} can be approximated by the static deflection shape due to the loads applied to approximated by:

$$y_{i_{max}} = DL_{max} F y_{i_{static}} \qquad 7$$

Thus, assuming that the response of the lower support structure to the transient blowdown forces may be represented by Equation 7, the dynamic effects of the transient may be investigated by evaluating the transient response spectra given by:

$$DLF_{max}(\omega) = \max\left[\omega \int_0^t f(\tau) \sin \omega\ (t-\tau) d\tau\right] \qquad 8$$

evaluated for $\omega=\omega_\eta$ where ω_η is the natural frequency estimated for the lower support structure.

A typical force transient for a hot leg break is shown in Figure 6.7-27. The resulting dynamic load factor plot is shown in Figure 6.7-28.

(4) Discussion

The recommended dynamic load factors are the maximum values from the transient response spectra for zero damping and for a frequency greater than 10 Hz (lowest estimated L.S.S. - Floor frequency).

As previously stated, transient response spectra used to determine the DLF are for zero damping, rather than, a damping of between 5 to 10%, which is more appropriated for the highly stressed, bolted lower support structure. Damping will reduce the dynamic response as indicated typically in Figure

6.7-28 which shows the response for horizontal forces for 0, 5, 10 and 20% damping. Thus the DLF recommended are conservative from this standpoint.

In addition to the conservatism used to derive the DLFs used for design, additional conservatism has been incorporated into the design by specifying that the forces scaled by the DLFs be applied to the structure in the worst manner to determine the maximum member forces. Since the maximum DLF for each transient will not occur at the same time, combining the member forces derived for each transient in this manner is conservative. In particular, an RMS combination similar to that used in earthquake analysis could be justified because of the time separation of peak occurrence.

The recommended DLFs have been conservatively derived and applied in the design of the lower support structure. Therefore, the resultant member forces determined for the

DBA, using the recommended DLF, result in a conservative prediction of the stresses induced in the structure.

Design Load Case

Because of the magnitude of the DBA forces, the proportions of all members and structural elements of the lower support structure are sized by the load combinations which include DBA forces. The DBA forces are 2 to 5 times larger than other forces that are applied to the lower support structure. The seismic, blowdown, and combined seismic and blowdown loads were considered in the design.

The combined load case is represented below:

DL + TN + EV + ER + ET + AV + AR + AT + LIDI

where:

DL = Gravity

TN = Thermal (70°F to 250°F)

EV = Safe shutdown earthquake forces in the vertical direction

ER = Safe shutdown earthquake forces in the radial direction

ET = Safe shutdown earthquake forces in the tangential direction

AV = Vertical forces due to DBA

AR = Radial horizontal forces due to DBA

AT = Tangential horizontal forces due to DBA

LIDI = Lower inlet door impact

Results of Stress Analysis

(1) Members

The stress in the various structural members for all of the design load cases was found to be below the design criteria as specified in Section 6.7.16.

(2) Joints

The member forces at connections from all load cases were used to proportion the connections. In the design of the connection for the load conditions, the recommendation of the AISC - 69 Code Section 2.8 were followed as specified in Section 6.7.16.

6.7.10 Top Deck and Doors

The top deck, intermediate decks containment shell, crane wall and end walls form the boundaries of the ice condenser upper plenum. The upper plenum houses the air handling units and the distribution ducts to the wall panels and provides a working space for loading, weighing and maintaining the ice baskets.

6.7.10.1 Design Basis

Function

An array of blanket panels forms a thermal and vapor barrier atop the upper plenum, allowing limited movement of air through vents during unit operation and free outflow of air during DBA.

A grating deck supports the blanket panels and accommodates traffic by inspectors. The top deck structure supports the grating as well as the bridge crane and rail assembly and the air handling units.

Loading Modes

The following loading conditions are considered in the design of the top deck: deadweight, seismic loads, blowdown loads, and live loads. The top deck structure withstand these loads and remain within the allowable limits established in Section 6.7.16.

Design Considerations

(1) The blanket panels are hinged on top of the crane wall. The major loads are applied directly into the crane wall.

(2) A blanket panel must be flexible, i.e., be capable of deforming out of its plane in response to relatively low forces without disintegrating. Deformation of panels during a DBA is permissible but formation of missiles must be averted.

(3) The deck forms an integral part of ice condenser performance during a DBA. Structural loads are a function of air pressure and flow relationships, which in turn are affected by deck characteristics.

(4) The top deck structures are subjected to loads from the air handling units and bridge crane in addition to the deck design loads.

Material Consideration

(1) Refer to Section 6.7.18 for a discussion of design criteria for steel structures.

(2) Blanket material is fire resistant by its own composition or by means of a suitable cover sheet.

(3) Blanket material is not a significant source of halides in gaseous form, whether by gradual diffusion of inherent ingredients or by radiolysis of component material following a DBA.

(4) Blanket material is not a significant source of leachable halides during exposure to containment spray following a DBA.

Thermal and Hydraulic Performance Requirements

(1) Heat input to the plenum through the top deck assembly is limited to 13.5 Btu/hr-ft^2.

(2) Resistance to air flow during a DBA is minimized, in terms of both inertia of panels and obstruction by grating. Panels may reclose or remain open following a DBA. Vents open on low differential pressure for small flow rates.

(3) A vapor barrier is established on the upper surface of the blanket panels.

Interface Requirements

(1) In the process of opening, adjacent blanket panels interfere with each other. This is acceptable in view of their flexibility.

(2) Sealing strips are installed to connect panel vapor barrier to adjacent panels, to crane wall, to end walls and to containment shell, without transmitting appreciable loads to the containment shell.

(3) The grating rests on, and is attached to, the cross beams between the top deck beams and transmits operating and drag loads to these structures. The structural members received loads from bridge crane and air handling units as well as the deck itself.

Design Loads

Loads used in the design of the top deck assembly are shown in Table 6.7-20.

6.7.10.2 System Design

The design of the top deck is shown in Figures 6.7-29 and 6.7-30.

The top deck doors consist of radially aligned flexible blanket panels resting on a grating deck and hinged on top of the crane wall.

A blanket pair covers one-half bay, extending from the radial centerline of a bay to the edge of the adjacent top deck beam. It consists of two blanket assemblies, one resting on the grating, the second one resting (mirror image) on the first one, with bands touching.

The parts of a blanket assembly and their respective functions are as follows:

(1) Thermal insulation is provided by a 1-inch-thick flexible polyurethane foam blanket.

(2) Approximately one-half of the centrifugal load is carried by 0.005-inch-thick fully hardened stainless steel bands.

(3) A stainless steel cover sheet ("skin") or similar material serves as a vapor barrier (top surface), protects the blanket against wear and fire (top and bottom surfaces), and provides all of the lateral and about one-half of the centrifugal strength.

(4) Parts 2 and 3 are bonded to the faces of the foam and extended along one edge to form a hinge.

The grating deck performs the structural functions of the top deck during non-accident conditions. It is supported from pairs of cross beams spanning the top deck beams, and its upper surface is flush with the top of the top deck beams. The bearing bars of the grating run parallel to the centerline of the particular bay. They are 2 inches high, 3/16 inch thick, and spaced on 2-3/8 inch centers. This design satisfied all requirements for open area and upward drag loads during DBA as well as for normal traffic loads. A clearance of no less than 4.0 inches is maintained between the grating and the containment.

The grating is fabricated from carbon steel, ASTM-A36, or A569 and provided with trim banding adjacent to top deck beams. Completed grating sections are galvanized for corrosion protection.

A hinge bar clamps one edge of each blanket assembly to the surface of the crane wall. Anchor bolts transmit the hinge loads into the crane wall.

Static insulation pads are attached to the top of the radial beams.

Flexible seal membranes are attached between vapor barrier (top) surfaces of the blanket panels and against vent base, and walls, and static insulation.

A pressure equalization "curtain" is suspended around the periphery of the top deck. The vent curtain minimizes diffusion of air under steady state conditions while permitting free movement of air in or out during momentary periods of pressure imbalance.

Fabrication

(1) Grating sections are fabricated to specific shapes, complete with trim banding. The finished assemblies are cleaned and hot dip galvanized.

(2) Structurals are cut and welded to suit.

(3) Blanket assemblies are fabricated by an insulation contractor using specified bonding methods.

(4) Hinge bars are machined from rectangular steel bars and painted or galvanized.

Installation

(1) Radial and cross beams are installed.

(2) The grating sections are placed and bolted down.

(3) Static insulation pads and blankets are placed in position all around top deck.

(4) Vent assemblies are installed.

(5) Seals are installed.

(6) Hinge bars are installed. Blankets are clamped. Static insulation is attached.

Top Deck Blanket Doors

The top deck doors were dynamically analyzed to determine the loads and structural integrity of the door for the design basis load conditions.

Using TMD results as input, the door dynamic analysis was performed using a separate computer code named the "DOOR" Program. This computer program has been developed to predict door dynamic behavior under accident conditions. This program takes the door geometry and the pressures and calculates flow conditions in the door port. From the flow are derived the forces on the door due to static pressure, dynamic pressure and momentum. These forces, plus a door movement generated force, i.e., air friction, are used to find the moment on the door and from this are derived the hinge loads. Output from the program includes door opening angle, velocity and acceleration as functions of time as well as both radial and tangential hinge reactions.

Analysis Due to LOCA

The net load distributions on the door opening are determined by considering the applied pressures acting on the door and then solving the rigid body equations of

motion such that the net forces and moments at the hinge point are zero. In the process, this produces expressions for the inertial forces in the door and the hinge bar reaction as functions of the applied pressure. The resultant horizontal and vertical hinge loads, calculated by the DOOR Program, provide the inputs for subsequent stress analysis.

Using this input, the blanket assembly is analyzed with horizontal and vertical forces being taken by direct stress in the skin and bands. As inertial forces are directly accounted for in the analysis, no dynamic load factor is applied.

The hinge bar and anchor bolt stresses are analyzed under hinge reactions considering the effects of the horizontal and vertical components of the tension band. For these components, no dynamic load factor is applied since the bars are very rigid themselves and are rigidly attached to the crane wall. Stresses in the blanket floor grating due to aerodynamic drag are also calculated. Loads used for stress calculations include 40% margin above computed TMD values. Certain aspects of the dynamic performance of a flexible door (e.g., tangential distortion, whipping, bowing) cannot be modeled with sufficient confidence.

A summary of the analysis performed and results are presented in Table 6.7-21. All portions of the door show factors of safety equal to or greater than one. The general acceptance criterion was that stresses be within the allowable limits of the AISC-69 Structural Code. For materials and components not covered by the Code, i.e., spring temper stainless steel nonmetallic materials, floor grating, etc., conservative acceptance criteria are established on the basis of manufacturer's recommendations or ASTM minimum tensile specifications.

Dynamic Test

A full scale test of a blanket pair (one-half bay) is performed for verification of analysis. Observed dynamic characteristics are found to correlate well with computed TMD values, and integrity of blankets is maintained within acceptable limits.

Top Deck Structure

The top deck structure is analyzed using the ANSYS finite element computer program, with three-dimensional beams representing the structural members, three-dimensional lumped masses representing the mass elements, and a stiffness matrix to represent the flexible connections in the system.. Geometric compatibility is maintained using three-dimensional rigid elements.

Two bays considered representative of the system were isolated and modeled. Conservatively, four air handling units are assumed to be located in the two-bay region, two next to the crane wall and two next to the containment wall.

Stresses are calculated for the various combinations of dead load, thermal, seismic and accident conditions. A modal analysis is performed to determine seismic amplification. Blowdown stresses are calculated using a computed dynamic load factor. Maximum stresses produced in major members are within the limits given in

Section 6.7.16. The circumferential struts, air handling unit beams and crane rails have been analyzed and are structurally acceptable.

6.7.11 Intermediate Deck and Doors

6.7.11.1 Design Basis

Function

The intermediate deck forms the ceiling of the ice bed region and the floor of the upper plenum. It serves as a thermal and vapor barrier, which allows limited air movement, through vents, between regions during normal plant operation and free out-flow of air and steam following a DBA.

Criteria

Refer to Section 6.7.16 for structural design criteria.

Loading Modes

The following loading conditions are considered in the design of the intermediate deck: deadweight, seismic loads, blowdown loads, and loads due to personnel traffic on deck. The intermediate deck structure withstands these loads and remain within the allowable limits established in Section 6.7.16.

(1) Design Criteria - Accident Conditions

(a) Resistance to air flow during a DBA is minimized, in terms of both inertia of door panels and obstruction by the frames. Panels may reclose or remain open. Panels open on low pressure differential for small flow rates.

(b) At the end of their movement, pairs of doors collide. Distortion at the time is acceptable, provided doors do not become missiles.

(c) The doors are of simple mechanical design to minimize the possibility of malfunction.

(2) Design Criteria - Normal Conditions

(a) Heat conduction through the intermediated deck is limited to 0.6 Btu/F-hr-ft^2.

(b) The design of the deck permits its use as a walking surface for maintenance of the air handling units and inspection of the ice bed.

(c) The design of the deck provides a vapor barrier between the ice bed and upper plenum area.

(d) The design of the deck provides convenient access to selected ice baskets for weighing and visual inspection.

(3) Interface Requirements

(a) Sealing strips are installed to seal deck frames to wall panels as a continuation of the vapor barrier.

(b) Hinge loads, drag loads, and live loads are transmitted from the deck through support beams to the lattice frame support columns.

(c) Instrumentation cables from the temperature monitoring system penetrate the seal area of the deck.

Design Loads

Pressure loading during LOCA is provided by the Transient Mass Distribution (TMD) code from an analysis of a double-ended hot leg break in the corner formed by the refueling canal, with 100% entrainment of water in the flow.

The intermediate deck design parameters and loads are presented in Table 6.7-22.

6.7.11.2 System Design

The intermediate deck is shown in Figure 6.7-31. For ease of manufacture and installation, the deck is separated into 48 subsections. Each subsection covers an area extending over a length of three lattice frames and a width of approximately half the ice condenser annulus. Two types of subsections are used; the inner subsection has overall dimensions of 11 ft long by 5 ft, 7 in. wide; and the outer subsection has dimensions of 12 ft by 4 ft, 7 in. Except for dimensional differences, the designs of inner and outer subsections are identical.

Each subsection consists of four door panels mounted on a steel frame. The door panels are sandwich structures, consisting of 26 gauge galvanized steel sheets bonded to a 2.5-inch thick urethane foam core. Loads developed in the sandwich structures are transmitted to two panel hinge points by a 2.5-in. x 5-in. rectangular steel tube which forms a backbone for the panel. The panel is reinforced and sealed by a peripheral channel and two internal ribs, formed from 18 gauge steel sheet.

Plates, which are welded to the ends of the tubular backbone, are drilled to accommodate 1-in. diameter stainless steel hinge pins. These pins in turn are supported by welded steel support brackets which are bolted, through the door frame, to intermediate deck support beams. Thus, hinge loads are taken directly into the support beams and not into the frame itself.

The door frame is fabricated from steel angle and T-sections. A formed channel on the frame holds a compliant bulb-type rubber seal which is compressed by the door in its closed position. In addition to being clamped in place by the hinge support brackets as described above,, additional bolts in the frame angles fasten the corners of the frame to the support beams and connect adjacent members of the inner and outer assemblies to each other.

The intermediate deck support beams are 8-in. wide flange steel members, which radially span the ice condenser annulus. They are bolted to the lattice frame support columns via welded plate bracket assemblies and compliant pads. The latter feature assures that beam end moments are not transmitted to the relatively flexible support columns.

Flexible membranes are installed between the intermediate deck frame and adjacent wall panels to provide a continuous vapor barrier.

Pressure equalization vents are installed at the containment wall side of the intermediate deck. Vertical flaps minimize diffusion of air under steady state conditions while permitting free movement of air in or out during momentary periods of pressure imbalance.

6.7.11.3 Design Evaluation

The intermediate deck doors are dynamically analyzed to determine the loads and structural integrity of the door for the design-basis load conditions.

Using TMD results as input, the door dynamic analysis was performed using a separate computer code named the DOOR Program. This computer program was developed to predict door dynamic behavior under accident conditions. This program takes the door geometry and the pressures and calculates flow conditions in the door port. From the flow are derived the forces on the door due to static pressure, dynamic pressure, and momentum. These forces, plus a door movement generated force, i.e., air friction, are used to find the moment on the door and from this are derived the hinge loads. Output from the program includes door opening angle, velocity, and acceleration as functions of time, as well as both radial and tangential hinge reactions.

Analysis Due to LOCA

The net load distributions on the door during opening are determined by considering the applied pressures acting on the door and then utilizing an analysis similar to that derived for the lower inlet door (Section 6.7.8), to obtain shear, moment, and hinge reactions.

Using this input the door panel is analyzed as a sandwich panel; i.e., the outer steel skins are assumed to carry tensile and compressive membrane loads, while the urethane core carries transverse shear loads between the outer skins. The tubular backbone is analyzed as a beam with biaxial bending and torsion under the combined effects of panel shear loading, panel centrifugal loading and hinge reactions. Hinge pins and support brackets, including bolting, are analyzed by considering the effects of tension, shear, and bending as appropriate. No dynamic load factor is applied, as inertial forces are directly accounted for in the analysis.

The door frame and attachment bolting are analyzed under loadings created by the differential pressure acting on the frame members. The intermediate deck beams and attachments are analyzed under the effects of loads transmitted to them by the door hinges and frames. For these latter analyses, appropriate dynamic load factors are calculated and applied.

All results indicated positive margins of safety in comparison with the criteria contained in Section 6.7.16.

During a LOCA, stopping of the doors is accomplished by impacting adjacent door panels against each other. In the process, a significant portion of the door kinetic energy is absorbed through plastic deformation of the door panels. This is an acceptable mode of behavior as long as the doors do not break up and lose their insulation or otherwise generate missiles. During simulated blowdown tests on full-scale prototype doors at levels of maximum pressures predicted by TMD, the ability of the doors to withstand opening and stopping loads is confirmed. Only local deformation of the panels results and no missiles or insulation are released.

Seismic Analysis

A response spectra nodal analysis is performed on the intermediate deck structure to determine maximum seismic loadings during 1/2 SSE and SSE. Resultant loadings on the structure are found to be negligible in comparison with LOCA loadings. Further, calculations indicates the doors will not open during either earthquake.

6.7.12 Air Distribution Ducts

6.7.12.1 Design Basis

Function

The air distribution ducts distribute the cold air from all air handling units uniformly to the wall panels (see Figures 6.7-32 and 6.7-33).

The loss of the air distribution function does not affect the safety of the unit as the ice bed is a passive component and can tolerate refrigeration system failures.

Design Criteria

The air distribution ducts are permitted to deform during accident conditions but must not affect any safety related components located nearby.

Design Conditions

(1) Normal Operation

Design temperature normal	10°F - 15°F
ΔP normal	2 inch WG

(2) Accident Conditions

Accident temperature maximum (without ΔP)	190°F

6.7.12.2 System Design

The air distribution ducts are located in the upper plenum. The ducts are made of galvanized sheet steel. The design includes flexible connections separating each duct and each air handling unit. The flexible connections also serve as vibration breaks.

6.7.12.3 Design Evaluation

The air distribution ducts are a part of the refrigeration system and serve to distribute cold air to the wall panels thereby maintaining the readiness of the ice in the ice bed. The air distribution ducts are not required to function during an accident. The air distribution ducts are, therefore, non-safety related components. Refer to Section 6.7.6 for detailed discussions of the refrigeration system performance during normal operating conditions and of its ability to tolerate refrigeration component failures.

During a LOCA the air distribution ducts are permitted to deform. Any deformation is outward toward the crane and liner wall insulation and therefore presents no problem to nearby safety related components.

6.7.13 Equipment Access Door

6.7.13.1 Design Basis

Function

The equipment access door permits movement of crane, equipment and personnel into and out of the ice condenser plenum for ice loading and maintenance.

In closed position, the door constitutes a thermal and vapor barrier (normal unit operation) and a pressure barrier (accident condition) between ice condenser air and upper containment atmosphere.

The basic functions of the equipment access door are non-safety related. It is important, however, to prevent failure of the door in any manner that may effect safety related components located nearby.

Design Criteria and Codes

The door is designed to comply with structural requirements of Section 6.7.16.

Design Conditions

(1) Normal Operation

Design temperature inside	15°F
Design temperature outside	100°F

(2) Accident Conditions

Maximum surface temperature	190°F

(without ∈P)

6.7.13.2 System Design

An equipment access door is provided in each end wall thereby providing ample access to the upper plenum. The equipment access door includes: the insulated door panel, frame and hoist assembly, gasketing, and fasteners. The door frame slides from closed to open position within a fixed frame embedded in the concrete end wall. All exposed surfaces are protected against corrosion by appropriate coating.

Limit switches are provided to monitor movement cf each door and to indicate position as a part of the door position monitoring system.

6.7.13.3 Design Evaluation

The equipment access door is a non-safety related component. The door stresses during SSE + DBA loadings are below the allowable levels.

6.7.14 Ice Technology, Ice Performance, and Ice Chemistry

6.7.14.1 Design Basis

The operational principle of the ice condenser is the condensation of steam by means of melting ice. Approximately one and a half pounds of ice per pound of reactor coolant are required to absorb the coolant energy to prevent excessive containment pressure and temperature buildup. The liquid resulting from the thawing process drains to the containment sump where it is utilized during the recirculation phase of cooldown by the emergency core cooling system. It is, therefore, necessary that the boron concentration of the recirculated primary coolant not be diminished through the action of the ice condenser. Hence, the ice condenser utilizes borated ice, which upon bulk melting delivers an aqueous solution containing 1900 $\pm$ 100 ppm boron to the containment sump. The solution used in this case to produce the ice for the condenser is one containing approximately 1900 $\pm$ 100 ppm borax ($Na_2B_4O_7 \bullet 10H_2O$).

The complete equilibrium freezing of this solution forms a eutectic composition with a melting point of -0.42°C (31.2°F).

On a microscopic scale, the complete equilibrium freezing of a 1900 $\pm$ 100 ppm aqueous solution of boron as sodium tetraborate, results in a solid consisting of crystals of pure ice (approximately 91% of the original water), surrounded by frozen eutectic. Microscopically this eutectic solid consists of individual crystals of pure ice and pure ($Na_2B_4O_7 \bullet 10H_2O$)[9].

6.7.14.2 System Design

The ice for the ice condenser is produced in machines that yield ice in the form of a continuous ribbon, approximately 1/8 inch thick which is deposited in storage bins via gravity chutes.

The ice is kept at subcooled temperatures by chilled air flowing through the hollow walls and floor of the bin and over the exposed surface of the ice.

Ice is pushed out of the bin by a mechanized rake and carried to an ice chopper via two screw conveyor. The chopper reduces the size of the ice flakes to approximately 2 in. x 2 in. x 1/8 in. The ice chopper discharges through a metering hopper into a pneumatic conveying valve.

The pneumatic conveying valve feeds ice at a measured rate into a stream of chilled compressed air, which carries the ice through temporarily erected piping to either one of the ice condenser units. The air/ice mixture is fed into a cyclone receiver atop of the ice baskets where the ice drops into the basket while the air is released into the containment vessel. The air that is fed into the containment vessel during this operation is removed by a vacuum receiver in order to maintain a stable containment vessel pressure.

The ice baskets are weighed after loading is completed and the intermediate deck and top deck beams are put in place. Several tools, which utilize the same weighing device, are necessary to weigh all the baskets at this time due to varying degrees of accessibility. During later periodic inspections, additional weighings of selected baskets are performed using the same tools.

6.7.14.3 Design Evaluation

As the ice condenser is to be available to perform its engineered safety feature function for the life of the unit, ice storage characteristics are an important consideration. Two mechanisms influence the long-term storage of the ice: (1) the diffusion of sodium borate crystals through the ice crystals and (2) the sublimation of the ice.

Diffusion

For a discussion of the first mechanism, refer to the phase diagram presented in Figure 6.7-34. When the temperature of an aqueous sodium tetraborate solution is continuously lowered, freezing begins with the formation of crystals of pure water surrounded by the salt solution. The temperature at which the first ice crystals form (assuming no supercooling) depends on the initial concentration of the solution. For example, a solution of ($Na_2B_4O_7 \bullet 10H_2O$) containing 2000 ppm boron begins to freeze at -0.41°C (+31.27°F), under one atmosphere pressure (Point A in Figure 6.7-34). If the freezing process is allowed to continue reversibly, i.e., under conditions of the thermodynamic equilibrium, more ice crystallizes and the surrounding solution increases in concentration according to line AB in Figure 6.7-34. Finally, when the system temperature is -0.42°C (+31.24°F), the remaining liquid freezes to a solid with a boron concentration of 2220 ppm. The composition of this solid is known as the eutectic composition.

If the borated ice is made by the very slow freezing process just described, the pure water crystals first formed become the centers for further crystallization and therefore grow until the liquid reaches the eutectic composition. The total number of these relatively large pure ice crystals is determined by the number of nucleation sites available in the solution during the initial phase of the process. If the freezing rate is made extremely large, i.e., the process is carried out in an irreversible manner, the initial crystals do not have time to grow appreciably before all the water sodium borate

has crystallized. Such a path is represented by the line CD in Figure 6.7-34. The solid obtained by this process is a uniform mixture of very small crystals of two kinds, ice and sodium tetraborate.

When a collection of various-sized crystals of a substance are maintained at constant temperature and pressure in contact with a solution saturated with respect to the substance, two processes tend to occur. The larger crystals tend to grow at the expense of the smaller ones, and the crystals of irregular form tend to become of regular form. Both of these phenomena are manifestations of systems tending toward thermodynamic equilibrium where the total free energy of the system (in this case the surface free energy) is at a minimum. The solution referred to above can also be a vapor and in the simplest case can be the pure saturated vapor of the crystalline substance. Note that kinetically the two processes are competitive and that both are subject to diffusional control. Therefore, diffusion of molecules, from one site to an adjacent one of the same crystal, would be favored over migration to another larger crystal in the case where rapid cooling of very dilute solutions causes many crystals to form that are small compared to the separation between them. Such is the case in practice with the ice condenser.

The driving force for diffusion between crystals of sodium borate through the pure ice matrix is a concentration gradient. If a large crystal is tending to grow, it causes depletion of sodium and borate ions in the immediately surrounding ice. If a small crystal tends to give up sodium and borate ions to feed the growth of the larger crystal then there is an increase in the concentrations of sodium borate surrounding the shrinking crystal. Since ice and sodium borate do not form an appreciable solid solution (note eutectic mixture of ice and sodium borate crystals), then the concentration of sodium borate around the shrinking crystal can not be large. For the sake of constructing an upper bound on diffusional effects in the borated ice, assume the maximum concentration to be approximately 10% of the eutectic solution concentration (i.e., 220 ppm).

Diffusion of sodium borate across a slab of pure ice can be estimated as follows:

Data for the diffusion of sodium borate in ice are not available, but the self-diffusion coefficients for deuterium, tritium and oxygen in ice have been reported by Franks[10]. At -11°C (+12°F) the value for all species is approximately 10^{-11} cm^2/sec. Assuming that the coefficient for sodium and borate ions is of the same order of magnitude, the rate of diffusion of sodium borate through a 1/32-inch slab of pure ice is estimated to be approximately 2×10^{-13} g/cm^2-sec. for an initial concentration of 220 ppm boron. If the concentration of boron in the ice phase on one face of the slab remained constant at 220 ppm while diffusion through the pure is slab took place, it would take over 100 years for an amount of boron in a single piece of condenser ice to diffuse 1/32 in., or halfway through the ice flake.

Since the quick frozen-borated ice is of stable uniform composition, upon bulk melting, there should be formed a solution of borax of uniform concentration. If the entire borated ice-mass were to be uniformly warmed above -0.42°C (+31.24°F), melting would begin at the points of contact between water crystals and $Na_2B_4O_7 \bullet 10H_2O$

crystals, and the ice-mass would lose structure. This is a phenomenon known as "rotting" and has been observed at times in sea-ice which has been subjected to slow (order of hours or days) temperature excursions to just above the melting point. If the melting process is rapid then the fact that the borated ice-mass is a mixture of crystals and not a homogeneous solid solution does not affect the performance of the ice condenser. Melting in the ice condenser occurs over a time span of the order of seconds, beginning at the contact between the steam and the ice-mass and progressing inwardly.

The above arguments are greatly simplified, but lead to conservative results. It can therefore be concluded from the above arguments that while some local changes undoubtedly occur in the quick-frozen borated ice, a mal-distribution of the solute boron in the ice condenser, of such magnitude as to affect the operation of the condenser as described in the first paragraph, is extremely remote. Furthermore, the microscopically heterogeneous composition of the borated ice-mass does not reflect itself in the ice condenser performance.

Sublimation

The other mechanism that affects the long-term storage of the ice is sublimation. Sublimation has several effects inside the ice condenser. The geometry of the ice mass changes where sublimation occurs, and the resulting vapor is deposited on a colder surface at another location inside the ice condenser.

In normal cold storage room application, the cooling coil is exposed to the air in the room, and moisture in the air freezes on the coil. If ice is stored in the room, all of the ice eventually migrates to the coil (which is defrosted periodically, draining the water outside the room) through a sublimation-mass transfer mechanism.

To avoid the mechanism, and maintain a constant mass of ice, the ice condenser is provided with double wall insulation. The annular gap between the insulated walls is provided with a heat sink in the form of a flow of cool, dry air that enters arid leaves through the insulated panels.

However, a small amount of heat enters the system through the inlet doors, which are not double insulated, and also through the double layer insulation system. The effect of this heat gain on the ice condenser has been examined analytically.

An analytical model of the sublimation process has been developed to provide an estimate of the expected sublimation rate as well as identify the significant parameters affecting the sublimation rate. The model developed a relationship identifying the fraction of total heat input which sublimes ice (the rest of the heat raises the temperature of the air, which transports the vapor to the cold surface where it freezes). The sublimation fraction depends on the difference in vapor pressure between warmest and coldest air temperatures within the ice condenser. The sublimation fraction decreases as the $\in T$ decreases and also as the average ice condenser temperature decreases. For an average temperature of 15°F in the ice condenser compartment, the analytical model predicts a sublimation rate of about 1% of the ice mass sublimed per year per ton (12,000 Btu/hr) of heat gain to the ice storage

compartment. The final heat gain calculations identified a heat gain into the ice storage compartment of 1 to 1.5 tons, most of which enters the compartment through the doors. For the purposes of this report, it is assumed that the reference heat gain for the unit is 1 ton, and therefore, the calculated reference sublimation rate would be 1% of the ice weight per year.

Selected baskets are weighed as indicated in Technical Specifications to verify that the actual sublimation rate has not excessively depleted the ice inventory.

Chemical Additives

Sodium tetraborate is used as a chemical additive to the ice in the plant. The boron is needed for recirculation through the core and the tetraborate is used for iodine removal and containment sump pH control. Boron or sodium tetraborate was also added to the ice used in the long-term-storage tests. Chemical analyses were performed before and after certain storage tests to identify any change in boron concentration in the ice. These chemical tests showed that the boron concentration did not significantly change during long-term ice storage. Also, the tests proved that the boron is not transferred with the ice during the sublimation process. It remains as a residue at the original point of sublimation.

Samples of flake ice with sodium tetraborate additive were placed in the cold storage room at Waltz Mill on August 29, 1969, and chemical analyses were made of the ice used in the test samples. The samples were suitably isolated so that sublimation would be minimized or prevented. The tests were terminated on June 19, 1970, approximately 9-1/2 months after initiation, and chemical analyses were again made of several samples taken from different locations in the test section. These analyses indicated that there was essentially no change in the boron concentration from beginning to end of testing, confirming the diffusion theory discussed above.

Testing

(1) General

The ice condenser design consists of 48-foot columns of ice contained within perforated metal baskets.

In the long-term storage of ice, the compression, shear, and creep characteristics are important considerations. Several years of testing at the Waltz Mill facility in these areas of interest has indicated that the ice bed maintains its geometry for its design life. While the construction of the ice baskets has changed since these tests were performed, the data is still applicable as the basic geometric configuration of the baskets has remained the same, and the same type of ice to be used in the unit was incorporated in the final series of tests. These Waltz Mill tests provide background on testing and additional information for evaluating the mechanical performance of ice.

A number of mechanical loading test series have been performed at Waltz Mill to determine compaction, shear, or creep rates in the ice bed. The first

series of test initiated in 1966 used the tube ice (hollow cylinders, 1.50-inch o.d. by 0.5-inch i.d. by 2-inch length) produced in a commercial ice machine. The ice used in the above tests was made with no chemical additive,, or with boron as a chemical additive to the ice. In some of these tests lead weights were placed on top of the ice samples to simulate the weight of various ice column heights.[14,15]

The final series of tests initiated in 1969 used flake ice in the same type of baskets to determine the compaction and shear rates of the ice.

As the flake ice represents the basis for the configuration used in the ice condenser, only those test results applicable for this ice form are discussed.

(2) Compaction Tests

Table 6.7-23 lists and describes the flake ice compaction tests performed, the duration of the tests, and the resulting compaction after one year of testing for these tests. The results of all of the tests showed that the greatest amount of compaction occurred during the first several months of testing. The amount of compaction varied with the equivalent height of the ice column, and depended on the type of ice employed. Figure 6.7-35 presents the percent compaction versus time for flake ice test D'. Compaction of flake ice occurs much more rapidly than the other forms of ice due to the smaller and random size of the individual pieces of ice. After the initial year of compaction, the rate of compaction reduces significantly. The rate of compaction reduced almost to zero as the ice density approaches some value close to the density of solid ice. Inspection of the compaction tests indicated no evidence of ice being extruded out through the sides of the baskets.

For these tests the compaction measured is for the bottom Section of the ice bed only; the ice above this level (simulated by lead blocks) would be compacted to a lesser extent since it is loaded with less weight. Therefore, the test results were corrected for the effect of continuously reducing load from bottom to top of the ice column. When this correction was made, the results of the flake ice tests (D', E') suggest that the amount of compaction of an increment in the ice bed varies linearly with the height of the ice bed above the increment, as shown by Figure 6.7-36. For flake ice the compaction rate must eventually change, as indicated by the dotted line, as the density of solid ice is approached. Application of this relationship would result in the estimated compaction relationship, shown in Figure 6.7-37, for total compaction (in the first year) versus unsupported height of the ice bed. Since the baskets provide supports for the ice every 6 feet, the compaction of any 6-foot section of the ice bed would be limited to less than 4 inches. As mentioned, density enhancement via water addition is expected to reduce compaction.

(3) Shear Tests

In these tests, ice was loaded into the basket on top of a temporary bottom support which was removed within one or two weeks after loading. The initial series of tests employed tube ice in expanded metal baskets with lead weights added to simulate additional weight of ice. All of the tests experienced an initial settlement within the first two months (after the temporary support was removed). Afterwards, the results show very low creep rates, which appear to be proportional to the weight added. Subsequently, it was concluded that each increment of ice in the basket would support its own weight by shear on the adjacent basket walls.

To evaluate this theory with flake ice, additional shear tests (G',H',I') were initiated. In these tests, unsupported ice bed heights of 1 foot, 3 feet and 5 feet were tested, with no lead weights added. In theory, the shear rate should be the same since each foot of ice column had the same shear support.

The results presented in Table 6.7-23, confirmed that the shear rates for the three ice bed heights were of similar magnitude for a period of about 6 months. The rate measured was about 1 inch per year and was about 10 times the rate measured in the previous tests with tube ice in expanded metal baskets. From this information it is concluded that the shear capability of flake ice on the sides of the wire baskets is small. However, in the unit design the ice is supported by the horizontal supports at the bottom and center of each 12-foot section of ice column, so the stability of the ice bed does not depend on the shear forces existing between the ice and the baskets.

6.7.15 Ice Condenser Instrumentation

6.7.15.1 Design Basis

The ice condenser is a passive device requiring only the maintenance of the ice inventory in the ice bed. As such there are no actuation circuits or equipment which are required for the ice condenser to operate in the event of a LOCA. The instrumentation provided for the ice condenser serves only to monitor the ice bed status. Since the ice bed has a very large thermal capacity, postulated off-normal conditions can be successfully tolerated for a week to two weeks. Therefore, the ice condenser instrumentation provides an early warning of any incipient ice condenser anomalies. In this way the operator can evaluate the anomaly and take the proper remedial action. Depending upon the anomaly, the operator typically may perform a local or system defrost, switch to a backup glycol circulation pump, start a backup chiller package, provide glycol makeup, isolate a glycol leak, or perform a safe and orderly shutdown. Since the ice condenser instrumentation can in no way actuate, nor prevent, a reactor trip or engineered safeguards action, there are no codes which apply to the design of the instrumentation systems. Any instrumentation failures or anomalies, however, are apparent in the control room, where ice condenser temperature monitors, door position monitors, coolant liquid level and valve position indications are displayed and alarmed. Ample time is available to investigate and alleviate or eliminate any off-normal condition without seriously degrading the ice inventory. The instrumentation is nevertheless designed for reliable operation which includes sufficient redundancy to ensure that the operator can accurately monitor the ice condenser status. There are

no special provisions for periodic testing of the instrumentation since normal testing and maintenance can be performed and is sufficient.

6.7.15.2 Design Description

Each equipment package (e.g., air handler, ice machine, chiller package) is provided with controls needed to regulate its normal operation. The ice condenser instrumentation serves to monitor the operation of the equipment packages and the ice bed status by providing to the operator the following control room information:

Ice Bed Temperature Monitoring

Resistance temperature detectors are located in various parts of the ice condenser. They serve to verify attainment of a uniform equilibrium temperature in the ice bed and to detect general gradual temperature rise in the cooling system if breakdown occurs.

Forty-eight resistance temperature detectors are mounted on ice bed probes which are located throughout the ice bed. These forty-eight resistance temperature detectors tie into a temperature scanner unit, located in the incore instrument room. The scanner multiplexes the ice condenser RTD's signals to a temperature recorder in the main control room. There are also six temperature switches located at various points in the ice bed to serve as backup indication should the scanner unit or recorder fail to operate. These inputs provide an alarm on the control room annunciator panel should the ice bed temperature exceed preset value. Refer to Table 6.7-24 and Figure 6.7-38 for location of these detectors. Refer to Figure 6.7-39 for a monitor system block diagram.

Lower Inlet Door Position Indication

Ninety-six limit switches are mounted on the lower inlet door frames with two limit switches on each of forty-eight door panels per containment unit. The position and movement of the switches are such that the doors must be effectively sealed before the switches are actuated. A single annunciator window in the control room gives a common alarm signal when any door is open.

For door monitoring purposes, the ice condenser is divided into six zones (refer to Figure 6.7-40). Each zone contains four inlet door assemblies, or a total of eight door panels. Each lower inlet door is provided with two single pole double throw, or equivalent limit switches, herein designated Switch X and Switch Y.

Within each zone, the normally open contacts of all the "X" switches are connected in series to a monitor light ("Door Closed") on the lower inlet door position display panel located in the main control room on Panel M-10 (refer to Figure 6.7-41).

Within each zone, the normally closed contacts of all the "X" switches are connected in parallel to a monitor light ("Door Open") on the door position display panel. (Refer to Figure 6.7.41).

The normally open contacts of all "Y" switches are not used. The normally closed contacts of all "Y' switches in the ice condenser are connected in parallel to the alarm

on the annunciator panel ("Ice Condenser Door Open") in the main control room (refer to Figure 6.7-41).

Equipment Access Doors

Eight limit switches are provided to monitor the position of the equipment access door and the personnel access door with two switches per door. These switches are fitted in a single series circuit providing control room indication of the position of all the doors.

Each equipment access door is provided with two single pole double throw or equivalent switches to indicate door latched and door seal inflated, respectively. The normally closed set of contacts of switches on the equipment access doors, latched and inflated, are all connected in series to a monitor light ("Access Door Closed"). The normally open set of contacts are connected in parallel to a monitor light ("Access Door Open"). Refer to Figure 6.7-41.

Expansion Tank Level

Annunciation and display are provided to warn the operator of coolant level excursions in the glycol expansion tank. Four indications are displayed corresponding to HI-HI, HI, LO, and LO-LO liquid levels. A loss of level would indicate a leak somewhere in the system or an erroneous valve operation. High level would result from mal-operation or failure of the refrigeration system. Two independent sensors are provided for each pair of level indications.

Isolation Valves

Two position lights (Open and Closed) located in the control room are provided for each of the glycol containment isolation valves. Individual annunciator windows in the control room alarm on isolation valve closure.

6.7.15.3 Design Evaluation

The ice condenser design provides adequate time for the proper evaluation of any adverse situations such that corrective action can be performed or an orderly unit shutdown can be scheduled and accomplished within the Technical Specification limits. The ice condenser monitoring instrumentation is tested and/or inspected on a periodic basis. In addition, the ice condenser should be defrosted once every nine months. The frequency of defrosting cycle can be varied based upon the extent of frost accumulation observed during the time periods prior to each defrosting cycle. Since the temperature recorders and alarms are active during the defrost periods, the performance of the monitoring instrumentation can be verified. Sufficient redundancy is provided in the ice condenser instrumentation to assure accurate monitoring of the ice condenser status.

---

*Also considered is D + L.

6.7.16 Ice Condenser Structural Design

6.7.16.1 Applicable Codes, Standards, and Specifications

The ice condenser structural design analysis are based on the AISC specification[11] where applicable. Material codes are discussed in Section 6.7.18.

6.7.16.2 Loads and Loading Combinations

(1) Dead Load + Operating Basis Earthquake loads (D + OBE).*

(2) Dead Load + Accident induced loads (D + DBA).

(3) Dead Load + Safe Shutdown Earthquake (D + SSE).

(4) Dead Load + Safe Shutdown Earthquake + Accident induced loads (D + SSE + DBA).

The loads are defined as follows:

Dead Load (D)

Weight of structural steel and full ice bed at the maximum ice load specified.

Live Load (L)

Live load includes any erection and maintenance loads, and loads during the filling and weighing operation.

Thermal Induced Load

Includes those loads resulting from differential thermal expansion during operation plus any loads induced by the cooling of ice containment structure from an assumed ambient temperature at the time of installation.

Accident Fluid Dynamic and Pressure Loads (DBA)

Accident pressure load includes those loads induced by any pressure differential drag loads across the ice beds, and loads due to change in momentum.

Operating Basis Earthquake (OBE)

The operating basis earthquake loads are those induced loads determined from the response of the ice bed and supporting structure to the OBE defined for the site.

Safe Shutdown Earthquake (SSE)

The safe shutdown earthquake loads are those induced loads determined from the response of the ice bed and supporting structure to the SSE defined for the site.

6.7.16.3 Design and Analytical Procedures

Analysis meeting the criteria presented in Section 6.7-16.4 is based on elastic system and component analyses. Limited load analysis is an alternative to this elastic

analysis. Limit loads are defined using limit analysis by calculating the lower bound of the collapse load of the structure. Load factors are applied to the defined design-basis loads and compared to the limit loads. The load factors determined for design-basis loads provide a margin of safety for the structure against collapse. A load factor of 1.43 is used when considering the mechanical loads due to dead weight and OBE. A load factor of 1.3 is used for either D + SSE or D + DBA. A load factor of 1.18 is used for D + SSE + DBA. The material is assumed to behave in an elastic-perfectly-plastic manner. The minimum specified yield strength is used. Mechanical plus thermal induced load combination and fatigue is analyzed on an elastic basis and satisfy the limits of Section 6.7.16.4.

Experimental or Test Verification of Design

In lieu of analysis, experimental verification of design using actual or simulated load conditions was used in some cases.

In testing, account is taken of size effect and dimensional tolerances (similitude relationships) which may exist between the actual component and the test models, to assure that the loads obtained from the test are a conservative representation of the load carrying capability of the actual component under postulated loading. The load factors associated with such verification are: 1.87 for D + OBE, 1.43 for D + DBA or D + SSE, and 1.3 for D + SSE + DBA. If the load factor of 1.87 for D + SSE cannot be met, a load factor of 1.7 is used.

A single test sample is permitted but in such cases test results are derated by 10%. Otherwise, at least three samples are tested and the design is based on the minimum load carrying capability.

6.7.16.4 Structural Acceptance Criteria

Table 6.7-25 provides a summary of the allowable limits to be used in the design of the ice condenser components.

For all cases the stress analysis is performed by considering the load combinations producing the largest possible stress values.

When limit analysis is performed on the ice condenser structure, or parts thereof, using the alternate analytical criteria method, Section 6.7.16.3, justification is provided to show that the results of the elastic systems analysis are valid.

Stress Criteria

The stress limits for elastic analysis are:

(1) D + OBE

Stress is limited to normal AISC, Part 1 Specification allowables (S). The members and their connections are designed to satisfy the requirements of Part 1, Sections 1.5, 1.6, 1.7, 1.8, 1.9, 1.10, 1.15, 1.16, 1.17, 1.20, 1.21, and 1.22 of the AISC Specification (stress increase in Sections 1.5 and 1.6 is

disallowed for these loads). Where the requirements of Section 1.20 are not met, differential thermal expansion stresses are evaluated and the maximum range of the sum of mechanical and thermal-induced stresses are limited to three times the appropriate allowable stresses provided in Sections 1.5 and 1.6 of AISC Specification.

(2) D + SSE, D + DBA

Stresses are limited to normal AISC Specifications allowables given in Sections 1.5 and 1.6, increased by 33% (1.33 S). No evaluation of thermal-induced stresses or fatigue is required.

(3) D + SSE + DBA

Stresses are limited to normal AISC Specification allowables given in Sections 1.5 and 1.6, increased by 65% (1.65 S). No evaluation of thermal-induced stresses for fatigue is required.

For all cases, direct (membrane) mechanical stresses are exceed 0.7 S_u, where S_u is the ultimate tensile strength of the material.

The summary of the ice condenser allowable limits is given in Table 6.7-25.

6.7.17 Seismic Analysis

6.7.17.1 Seismic Analysis Methods

The lattice frames, ice baskets, wall panels on the crane wall side, and lower support of the ice condenser structure form a complex structural system. In order to perform a realistic seismic analysis of this structure, it is necessary to consider the gaps between the ice baskets and the lattice frame. It is not feasible to perform a response spectrum model analysis when considering gaps because the structure is non-linear, thus requiring a dynamic time history analysis. Six different non-linear, models are used to develop the design loads. Results are documented in Section 6.7.17.2.

Linear Seismic Analysis

Each level of lattice frames encompasses an approximate 300° horizontal arc and consists of 72 lattice frames. One level of eight levels of lattice frames is modeled so that the structural coupling between individual lattice frames could be evaluated.

The dynamic model used to determine the horizontal response characteristics of one level of lattice frames is shown in Figure 6.7-44. It is a lumped-mass beam representation. Cantilever beam elements are used to represent the bending and shear stiffness of six interconnected lattice frames as shown in Figure 6.7-45. For the model shown in Figure 6.7-44, the mass associated with a set of six lattice frames is lumped at the end of the cantilever beam. The length used for the cantilever beam is representative of the distance to the center of gravity of the ice baskets associated with one lattice frame. The lumped masses are connected by tie members representing the combined coupling stiffness of six lattice frames.

The dynamic response characteristics of one level of lattice frames is obtained by computer program. It was determined that the structural coupling between individual lattice frames is negligible and that the fundamental response of the ice bed lattice frame is essentially that of the individual lattice frames acting independently. Therefore, a lattice frame can be uncoupled from those in the same level for modeling purposes.

Non-Linear Seismic Analysis

(1) Ice Condenser Seismic Load Study of the Effect of Gaps

A clearance or gap is required at the ice basket supports for installation and maintenance reasons. A schematic view of the ice basket gap is shown in Figure 6.7-46. The design value for the cap is 1/4 inch radially or 1/2 inch on the diameter.

The effect of the gap during a seismic excitation is twofold. First, impact loads are applied to the ice basket as it bounces within the clearance, which produce higher loads in the ice basket than would exist if there were no gap. Second, the repetitive impacting at the ice basket supports dissipate substantial amounts of energy. Stated differently, there is a higher damping within the structure than would exist if there were no gaps. This effect is illustrated with actual test results in Figure 6.7-47.

(2) Description of Non-Linear Models

Four non-linear models of lattice frames uncoupled from those in the same level were used to determine the effect of ice basket impact on the ice condenser loads. Two additional models with adjacent lattice frame bays coupled by a phasing link were used to investigate lattice frame phasing. The six models are shown in Figures 6.7-48 through 6.7-53 and are described as follows:

Shown in Figure 6.7-48 is the two-mass model which is composed of two non-linear elements which represent the local impact stiffness existing between the lattice frame and ice basket, and a lattice frame spring between the lattice frame mass and the crane wall. The impacting mass represents twenty-seven, six-foot long ice baskets.

Five other models were developed to assess the validity of the two mass model.

Figure 6.7-49 shows the three mass tangential model whose purpose was to assess the effect of phasing between ice baskets in the tangential direction. There are three rows of ice baskets in the tangential direction across each lattice frame. Each lumped mass represents one ice basket. The lattice frame is modeled as truss members spanning each ice basket.

Figure 6.7-50 shows the nine-mass radial model whose purpose is to assess phasing in the radial direction. Nine rows of ice baskets in the radial direction going out from the crane wall are represented in the model. Each basket has its associated impact elements on each side and the effective properties of the lattice frame spanning each ice basket.

Figure 6.7-51 shows the 48-ft beam model which is a non-linear model containing twenty-seven ice baskets modeled as a continuous beam. The local effect of each lattice frame is represented by a pair of impact elements, one on each side of the ice basket. The lattice frame-wall panel stiffness is represented by a stiffness element. The lower support structure is modeled by a stiffness element at the bottom of the ice basket. The purpose of this model is to investigate the influence of the full 48-ft ice basket column.

Figure 6.7-52 shows the phasing mass model whose purpose is to evaluate the phasing link loads and crane wall reactions when adjacent bays of lattice frames respond out of phase with each other. The phasing mass model consists of a pair of two-mass models representing adjacent bays of the ice condenser. The lattice frames of the adjacent bays are coupled together with a phasing link. The design value for the phasing link gap is 1/16 inch between adjacent lattice frames.

Figure 6.7-53 shows the non-linear 300° phasing model. The non-linear 300° phasing model is similar to the linear model shown in Figure 6.7-44 except that it incorporates a phasing connector between lattice frames with a phasing gap of 1/16 inch between adjacent lattice frames. The purpose of this model was to demonstrate that the phasing link creates "phasing" within a specified tolerance and to demonstrate that it is still valid to model the basic ice condenser structure using only one lattice frame per level even though a phasing connector is used.

Analytical Procedure and Typical Results

Using typical results obtained from the two-mass dynamic model, the procedure used in the non-linear analysis will now be discussed. First, the input acceleration-time histories are converted to displacement-time histories by double integration. The displacement time histories as shown in Figure 6.7-54 were then input to the non-linear dynamic model. Results are shown in Figures 6.7-55 through 6.7-57 for the case corresponding to a one-half inch gap between the ice basket and lattice frame, for tangential excitation.

Figure 6.7-55 shows the output displacement-time history of the ice basket mass superimposed on the input displacement. It shows that the response generally follows the input displacements except for some amplification in the neighborhood of the peaks.

Figure 6.7-56 shows the impact loads on the ice baskets for this particular case. Note the short duration time of the impact loads.

Figure 6.7-57 shows the forces induced in the wall panels on the crane wall side as obtained from the two-mass dynamic model.

6.7.17.2 Seismic Load Development

Time History Dynamic Input

Crane wall seismic time histories for the OBE and SSE, in the EW and NS directions, were developed using four synthesized earthquakes. These earthquakes are the same as used to develop the Watts Bar response spectra. These time histories were the actual earthquake records as modified by the building, i.e., as filtered through the building to the points of interest on the crane wall.

The structural response is computed for each earthquake and then averaged by computing the arithmetic mean of the four sets of response values. The seismic design loads are based on the seismic loads obtained by averaging.

Design Load Verification Analyses

Non-linear seismic results obtained using the two-mass dynamic model are shown in Tables 6.7-27 and 6.7-28 for the tangential and radial cases, respectively. The wall panel loads and impact loads are shown for the OBE and-SSE north-south and east-west earthquakes with the respective design loads. The lattice frame-wall panel stiffness used to obtain the analysis results shown were 24,000 lb/in for the tangential case and 50,000 lb/in for the radial case. These values are consistent with stiffness obtained from tests.

The analyses made using the two-mass dynamic model used the time histories associated with 807.82 ft elevation on the crane wall which has high seismic response characteristics.

Table 6.7-29 gives a summary of SSE load results obtained from the five non-linear dynamic models.

Seismic tangential and radial load distributions along the crane wall were found using the 48 ft beam model and are presented in Figures 6.7-58 and 6.7-59. They represent the portion of the seismic design load used at the various lattice frame locations. All loads obtained from analysis are within the seismic load distribution design "envelope".

Many seismic studies have been performed to understand the dynamic behavior of the ice condenser system. The effect of sublimation on the ice condenser system response has been studied. Phasing studies have been performed. The findings from these studies have been reported in other submittals, and therefore are not reported here. For a discussion of these studies, see References [12] and [19].

Seismic Design Loads

Seismic design loads have been developed for the lattice frames, ice baskets, and the wall panels. They are shown in Tables 6.7-27 and 6.7-28. The seismic design load

distributions developed using the 48 ft beam model are shown in Figures 6.7-58 and 6.7-59.

The non-linear analyses performed to develop seismic design loads uses 5% structural damping and 10% impact damping, and nominal gap size of 1/2 inch on the diameter between the baskets and the lattice frames. Note that a nominal gap size of 1/16 inch exists in the link between adjacent lattice frames.

Table 6.7-30 gives a summary of parameters used in the seismic analyses. These parameters are based on analyses and tests of the ice condenser system.

6.7.17.3 Vertical Seismic Response

The combined floor and lower support structure are modeled in the vertical direction. The full weight of the baskets and ice were considered. It was found that the fundamental frequency, the dominant mode, of the combined structure in the vertical direction is above 14.7 Hz. There is no amplification of the crane wall in the vertical direction at the elevation of the lower support structure. Therefore, the vertical response spectra have the shape of the ground response spectra and are normalized to two-thirds of the seismic ground acceleration.

6.7.18 Materials

6.7.18.1 Design Criteria

Structural steels for ice condenser components are selected from the various steels listed in the AISC Manual of Steel Construction or ASTM Specifications[11]. When materials such as steel sheets, stainless steel or non-ferrous metals are required and are not obtainable in the AISC Code, these materials are chosen from ASTM specifications. Proprietary materials such as insulating materials, gaskets and adhesives are listed with the manufacturer's name on the component drawings.

Material certifications for chemical analysis and mechanical properties are required with testing procedure and acceptance standards meeting the AISC or ASTM requirements.

Because the concept of non-ductile fracture of ferritic stool is not a part of the AISC Code and Westinghouse recognizes its importance in certain ice condenser components where heavy plates and structurals are used such as the lower support structure, Charpy V-notch (CVN) energy absorption requirements are stipulated as shown in Table 6.7-26. Bolting material for bolts one inch in diameter and larger meets the impact energy absorption requirement, for full size CVN specimen, of 20 ft-lbs at -20°F.

These criteria apply to the design of the following ice condenser components:

(1) Lattice frame and columns including attachments and bolts greater than one inch in diameter.

(2) Structural steel supporting structures comprising the lower support structure, door frames and bolts greater than one inch in diameter.

(3) The supports of auxiliary components which are located within the ice condenser cavity but which have no safety function.

Wall panels and cooling duct support studs attached to the crane wall and end walls are tested as follows:

(1) A hammer bend test on the gun-welded and fillet-welded studs is performed in accordance with AWS D 1.1. This test is performed at temperatures of +70°F. +20°F, and -20°F .

(2) A bend test to measure the flexural strength of the studs at the above temperatures is performed. The studs are welded to a plate of similar physical and chemical properties by the method and position (flat, vertical, overhead, sloping) used in installation. Acceptance is based on the stud's ability to meet the minimum ultimate strength prior to failure.

The various candidate materials, i.e., steel sheets, structural shapes, plates and bolting used in the ice condenser system, are selected on the following criteria:

(1) Provide satisfactory service performance under design loading and environment and pressure or construction performance.

(2) Assure adequate fracture toughness characteristics at ice condenser design conditions.

(3) Be readily fabricated, welded, and erected.

(4) Be readily costed for corrosion resistance, when required.

The candidate materials are of high quality and are made by steelmaking practices to be specified by Westinghouse. Principal candidate materials meeting the above bases are discussed below. Other materials for specific applications are selected on a case-by-case basis.

6.7.18.2 Environmental Effects

The atmosphere in the ice bed environment is at 10°F - 20°F and the absolute humidity is very low. Therefore, corrosion of uncoated carbon steel is negligible.

To ensure that corrosion is minimized while the components of the ice condenser are in storage at the site or in operation in the containment, components are galvanized, painted, or placed in a protective container. Galvanizing is done in accordance with ASTM, A123, or A386.

Materials such as stainless steels with low corrosion rates are used without protective coatings.

Corrosion has been considered in the detailed design of the ice condenser components, and it has been determined that the performance characteristics of the ice condenser materials of construction are not impaired by long term exposure to the ice condenser environment.

Since metal corrosion rates are directly proportional to temperature and humidity, corrosion of ice condenser components at operating temperatures has been considered to be almost nonexistent. Data available in the open literature do not reflect the exact temperature range and chemistry conditions that are expected to exist in the ice condenser, but do indicate that corrosion rates decreased with decreasing temperatures for the materials and conditions being considered. Although the data in the literature indicated that corrosion of components is not expected, several preventive measures were used in the construction of the ice condenser system. To inhibit corrosion, the ice baskets are galvanized. Tests have shown that galvanized material would not be expected to fail due to corrosion during a 40 year exposure to at 5°F - 15°F ice condenser refrigerated air environment. Other structural members are either galvanized or protected by corrosion resistant paints that meet the requirements of ANSI 101.2-1972 ("Protective Coatings (Paints) for Light Water Nuclear Reactor Containment Facilities"), as a minimum, or are constructed of stainless steel. Heavy plate and structural fabrications made from A588 steel may be installed in the blasted and/or bare condition. A tightly adherent scale forms on the surface of this steel when it is exposed to the atmosphere.

Quenched and tempered steel components are not hot dip galvanized, but are painted or left in the base condition.

With due consideration of the non-corrosive environment, and judicious selection of component materials based upon sound engineering judgment, the structural integrity of the ice condenser components is not jeopardized, and the design criteria for the plant are met.

6.7.18.3 Compliance with 10 CFR 50, Appendix B

The following sections of this report address themselves to demonstrating compliance with 10 CFR 50, Appendix B. The design process control policy defines the criteria that must be considered when establishing design process control procedures. The design process procedures represent how Westinghouse controls its design processes relative to 10 CFR 50, Appendix B requirements. The subject procedures are supplementary to the flow diagram and cross-reference is obtained through the use of activity numbers.

The products and scope of responsibility at Westinghouse are defined by the shop order description. From this base, the shop order flow diagrams were developed for the purpose of subdividing the job into its component activities and thereby creating generic categories of activities that require similar control systems. These categories are:

(1) Interface Control

(A) Interfaces are controlled by specifically identifying the relationship on the flow diagram and also by quantifying the information transmitted across the interface.

(B) Document Control - A procedure employing a file log book is carefully maintained and provides control of document issue.

(2) Analysis (includes review and comment, approval responsibilities)

These activities involved in providing or commenting on design information are controlled according to methods outlined in design process procedures. The nature of the product and its relative technical importance determine the level of controls applied.

(3) Verification

These activities fulfill the requirement that design information must be validated by the originator prior to communication to a user. Techniques used vary due to the diverse nature of the products involved.

There is a design process control procedure for each shop order which consists of at least, a flow diagram, a shop order description, and design process procedures.

The design process procedures are related to the flow chart through the use of the activity numbers and the specific control methods.

Regarding quality assurance of material, when required, parts or welded fabrications will be inspected by visual, magnetic particle (MT), liquid penetrant (PT), or ultrasonic (UT) methods according to ASTM procedures, AWS D1.1, or Westinghouse process specifications. The method and extent of inspection are designated on the component drawings.

6.7.18.4 Materials Specifications

Sheets

Carbon steel sheets are commercial quality (CQ), drawing quality (DQ), or drawing quality-special kilned (DQ-SK). The selection of the quality depends upon the part being formed. When higher strength, structural quality sheets are required, ASTM specification A607 is used.

The ice baskets are made from perforated sheet material. The wall duct panels are made from sheet material.

Structural Sections, Plates, and Bar Flats

Structural sections, plates, and bar flats are generally high strength, low alloy steels selected for suitable strength, toughness, formability and weldability.

The high strength low alloy steels are A441, Ax588, A572, or A633. These steels are readily oxygen cut and possess good weldability.

Bolting

High strength alloy steel Type A320 L7 bolting for low temperature service is used for the lower support structure. Stocked bolting made from A325, A449, and ASTM A354 Grade BD (SAE J429 Grade 8) materials is used for other parts. The above bolts meet CVN 20 ft-lb at 20°F for sizes greater than 1 inch in diameter.

Non-Metallic Materials

Non-metallic materials such as gaskets, insulation, adhesives and spacers are selected for specific uses. Freedom from detrimental radiation effects is required.

Welding

Welding was in accordance with the American Welding Society (AWS), "Structural Welding Code," AWS D1.1 with revisions 1-73 and 1-74, except later editions may be used for prequalified joint details, base materials, and qualification of welding procedures and welders. Nuclear Construction Issues Group documents NCIG-01 and NCIG-02 may be used after June 26, 1985, for weldments that were designed and fabricated to the requirements of AISC/AWS. Visual inspection of structural welds will meet the minimum requirements of NCIG-01 and NCIG-02 as specified on the design drawings or other design output. Inspectors performing visual examination to the criteria of NCIG-01 are trained in the subject criteria.

Magnetic particle examination is performed on at least 5% of the welds in each critical member of the lower support structure. Magnetic particle or liquid penetrant examinations where applicable, are performed on 5% of the welds in each critical member of the balance of the ice condenser structure. The welds selected for non-destructive test examinations are designated on the component drawings or in the design specifications.

6.7.19 Tests and Inspections

The tests and inspections are given in the Technical Specifications.

REFERENCES

(1) Deleted by Amendment 85.

(2) Test Plans and Results for the Ice Condenser System, WCAP-8110, April 16, 1973.

(3) Test Plans and Results for the Ice Condenser System, WCAP-8110, Supplement 1, April 30, 1973.

(4) Test Plans and Results for the Ice Condenser System, WCAP-8110, Supplement 2, June 19, 1973.

(5) Test Plans and Results for the Ice Condenser System, WCAP-8110, Supplement 3, July 19, 1973.

(6) Test Plans and Results for the Ice Condenser System, WCAP-8110, Supplement 4, November 15, 1973.

(7) Plantema, F. F., Sandwich Construction, John Wiley, New York, 1966.

(8) Idel'chik, Handbook of Hydraulic Resistance, AECTR 6630, NTIS, Springfield, Va.

(9) Nies, N. P. and Hulbert, R. W., Journal of Chemical and Engineering Data, Vol. 12, No. 3, pp. 303-313, 1967.

(10) Franks, F., Water, Vol. 1, Plenum (1972), Ch. 4.

(11) Specification for the Design, Fabrication and Erection of Structural Steel for Buildings, American Institute of Steel Construction, 1969 Edition.

(12) Donald C. Cook Nuclear Plant, FSAR, American Electric Power Service Corporation, Docket Numbers 50-315 and 50-316.

(13) Ice Condenser System Lower Inlet Door Shock Absorber Test Plans and Results, WCAP-8336, May 1974 (Westinghouse NES Proprietary), and WCAP-8110, Supplement 5, May 1974.

(14) Final Report - Ice Condenser Full-Scale Tests at the Waltz Mill Facility, WCAP-8282, February 1974 (Westinghouse NES Proprietary), and WCAP-8110, Supplement 6, May 1974.

(15) Final Report - Ice Condenser Full-Scale Tests at the Waltz Mill Facility, WCAP-8282, Addendum 1, May 1974 (Westinghouse NES Proprietary), and WCAP-8110, Supplement 7, May 1974.

(16) Stress and Structural Analysis and Testing of Ice Baskets, WCAP-8304 (Westinghouse NES Proprietary) and WCAP-8110, Supplement 8, May 1974.

(17) Ice Fallout From Seismic Testing of Fused Ice Basket, WCAP-8110, Supplement 9-A, May 1974.

(18) Static Testing of Production Ice Baskets, WCAP-8110, Supplement 10, September 1974.

(19) Sequoyah Nuclear Plant Final Safety Analysis Report, Tennessee Valley Authority, Docket Numbers 50-327 and 50-328.

Table 6.7-1 Wall Panel Design Loads(1)
(Page 1 of 2)

A.	**Service Loads**	
	Weight of Panels on Containment and End Wall (58 ft-length)	
	Weight of Panels Crane Wall (48-ft length)	100 lbs/linear ft
	Pressure (Wall panel internal)	60 lbs/linear ft
		0 to 0.5 psig
B.	**OBE Lattice Frame Column Loads (2)**	
	(Maximum at 45-ft elevation)	± 7920 lbs
	Radial at 90° (acting alone)	± 9600 lbs
	Tangential at 0° (acting alone)	
	Combined Load at 45°	± 6190 lbs
	Radial	± 6190 lbs
	Tangential	
C.	**SSE Lattice Frame Column Loads (2)**	
	(Maximum at 45-ft elevation)	+ 8800 lbs
	Radial at 90° (acting alone)	± 11200 lbs
	Tangential at 0° (acting alone)	
	Combined Load at 45°	± 7070 lbs/ea
	Radial	± 7070 lbs/ea
	Tangential	
D.	**DBA(2)**	
	(Maximum at 15 ft elevation)	± 6210 lbs
	Lattice Frame Column Load	± 8259 lbs
	Radial	18.9 psig
	Tangential	
	Pressure (D.L.F.) = 1.5; M = 1.4)*	

* DLF = Dynamic Load Factor
M = Margin

Table 6.7-1 Wall Panel Design Loads[1]
(Page 2 of 2)

E.	**SSE plus DBA[2]**	
	15-ft Elevation	
	Lattice Frame Column Load @ 0°	
	Radial	± 6211 lbs
	Tangential	±13260 lbs
	Lattice Frame Column Load @ 45°	
	Radial	±10701 lbs
	Tangential	±12750 lbs
	Pressure (D.L.F. = 1.5; Margin = 1.4)	18.9 psig
	33-ft Elevation	
	Lattice Frame Column Load @ 0°	
	Radial	0
	Tangential	±14920 lbs
	Lattice Frame Column Load @ 45E	
	Radial	± 6916 lbs
	Tangential	±13336 lbs
	Lattice Frame Column Load @ 90E	
	Radial	±11060 lbs
	Tangential	± 6420 lbs
	Pressure (D.L.F. = 1.5; Margin = 1.4)	18.9 psig

(1) Design Pressure loads, as stated, are applied uniformly to the wall panel transverse beams. Radial and tangential loads are applied at lattice frame column to wall panel attachment. These are maximum load combinations.

(2) Vertical seismic loads (0.35 and 0.55 times dead load for 1/2 SSE and SSE, respectively) and vertical design basis accident loads are neglected in the analyses because they are small in comparison to the radial and tangential loads.

Table 6.7-2 Ice Basket Load Summary Minimum Test Loads

	Case I		Case II		Case III		Case IV	
Elevation* (ft)	D + OBE		D + DBA		D + SSE		D + SSE + DBA	
	H	V	H	V	H	V	H	V
0	463	4933	429	-2283	496	433O	841	-3473
6	1131	4316	423	-1998	1211	3789	1486	-3039
12	1296	3698	414	-1713	1387	3248	1638	-2605
18	1543	3083	357	-1427	1652	2707	1826	-2171
24	1748	2466	333	-1142	1872	2164	2005	-1736
30	1790	1849	303	-856	1916	1623	2017	-1301
36	1810	1232	252	-531	1938	1082	1991	-831
42	1687	617	213	-285	1806	541	835	-434
48	823	0	192	0	881	0	976	0
Basic Design Loads								
Elevation* (ft)	D		OBE		SSE		DBA	
	H	V	H	V	H	V	H	V
0	0	1776	225	622	315	977	143	-2536
6	0	1554	550	544	770	885	141	-2219
12	0	1332	630	466	882	733	138	-1902
18	0	1110	750	389	1050	611	119	-1585
24	0	888	850	311	1190	488	111	-1268
30	0	666	870	233	1218	366	101	-951
36	0	444	880	155	1232	244	84	-614
42	0	222	820	78	1148	122	71	-317
48	0	0	400	0	560	0	64	0

* Above lower support structure

Table 6.7-3 Summary Of Stresses In Basket Due To Design Loads

Elevation from Lower Support Structure, ft	Design Load, lb(1) H	V	Maximum Stress, psi	Allowable Stresses, psi
0	(3) 304	3029	11,508	25,536(2)
12	(3) 650	2271	17,100	25,536(2)
24	(3) 761	1514	17,967	25,536(2)
36	(3) 835	378	17,435	25,536(2)
12	(4) 1017	-2003	23,988	31,104(5)

Notes:

(1) With 10% margin

(2) Allowable stress = 0.6 x s_y x 1.33 per Section 6.2.2.16

(3(Design load, D + SSE

(4) Design load, D + SSE + DBA, 10% margin on weight, 40% margin on pressure and 1.5 dynamic load factor

(5) Allowable stress = 0.6 x s_y x 1.65

Table 6.7-4 Ice Basket Material Minimum Yield Stress

Item	Material	Minimum Yield Stress (ksi)
Clevis Pin and U-Bolts	SAE-J 429 Grade 8	130
Basket End Coupling and Stiffener	ASTM A-622	32
Nut	AISI-431	125 (Min. Shear)
Mounting Bracket Assembly	ASTM A-588 Grade A	50
Plate	ASTM A-36	36
Grid Bars	ASTM A-570 Grade 13	40
Wire Mesh	ASTM A-641	
Perforated Basket	ASTM A-569	32
C-1022 Heat Treated to C52 (Couple Screw)		130

Table 6.7-5 Allowable Stress Limits (D + Obe) For Ice Basket Materials

Material	Specified Minimum Yield (ksi)	Allowable Limits Tension F_t = .6Fy (ksi)	Shear F_y = .4Fy (ksi)	Bearing F_p = .9Fy (ksi)	Bending F_b = .66Fy (ksi)
Carbon Steel					
130 KSI					
Minimum Yield	130	78	52	117	85.8
ASTM					
A588	50	30	20	45	33
ASTM					
A570	30	18	12	27	19.8
ASTM					
A622	32	19.2	12.8	28.8	21.1
ASTM					
A36	36	21.6	14.4	32.4	23.8
ASTM					
A641	40	24	16	36	26.4
ASTM					
A569	32	19.2	12.8	28.8	21.1

Table 6.7-6 Allowable Stress Limits (D + Sse), (D + Dba) For Ice Basket Materials

Material	Specified Minimum Yield (ksi)	Allowable Limits Tension $S_t=1.33F_t$ (ksi)	Shear $S_v=1.33F_v$ (ksi)	Bearing $S_p=1.33F_p$ (ksi)	Bending $S_b=1.33F_b$ (ksi)
Carbon Steel					
130 KSI					
Minimum	130	103.7	69.2	155.6	114.1
ASTM-A588	50	39.9	26.6	59.8	43.9
ASTM					
A570	30	23.9	16.0	35.9	26.3
Grade B					
ASTM					
A622	32	25.5	17.0	38.3	28.1
ASTM					
A36	36	28.7	19.1	43.0	31.6
ASTM					
A641	40	31.9	21.3	47.9	35.1
ASTM					
A569	32	25.5	17.0	38.3	28.1

Table 6.7-7 Allowable Stress Limits (D + Sse + Dba) For Ice Basket Materials

Material	Specified Minimum Yield (ksi)	Allowable Limits Tension S_t= 1.65F_t (ksi)	Shear S_v=1.65F_v (ksi)	Bearing S_p=1.65F_p (ksi)	Bending S_b=1.65f_b (ksi)
Carbon Steel					
130 KSI					
Minimum	130	128.7	85.8	193.1	141.6
ASTM-A588	50	49.5	33.0	74.2	54.4
ASTM					
A570	30	29.7	19.8	44.6	32.7
Grade B					
ASTM					
A622	32	31.7	21.1	47.5	34.8
ASTM					
A36	36	35.6	23.8	53.5	39.2
ASTM					
A641	40	39.6	26.4	59.4	43.6
ASTM					
A569	32	31.7	21.1	47.5	34.8

Table 6.7-8 Ice Basket Clevis Pin Stress Summary

Load CaseNo	Horiz.Load (lbf)	Vert. Load V (lbf)	Pin Bending Stress f_b (10^3 psi)	Pin Shear Stress f_y (10^3 psi)	Pin-Lug Bearing Stress f_p (10^3 psi)
I	251	2638	67.3 (97.5)[1]	13.5 (52)	10.6 (45.0)
II	300	-1596	41.2 (129.7)	8.3 (69.2)	6.5 (59.8)
III	251	3028	77.1 (129.7)	15.5 (69.2)	12.1 (59.8)
IV	551	-2671	69.3 (160.9)	13.9 (85.8)	10.9 (74.2)

Notes:

[1]Parenthetical values are stress allowables.

Table 6.7-9 Ice Basket Mounting Bracket Assembly Stress Summary

Load Case No.	Horiz. Load H (lbf)	Vert. Load V (lbf)	Load Case Factor N	Point Interaction Formula Value[1] X	Washer Bearing Stress f_p (psi x 10^3)	Shear Tear Out Stress f_v (psi x 10^3)	Weld Shear Stress f_v (psi x 10^3)
I	251	2638	1.0	0.90	34.6 (45.0)[2]	- (20.0)	7.8 (20.0)
II	300	-1596	1.33	0.57	36.6 (59.8)	5.3 (26.6)	5.4 (26.6)
III	251	3028	1.33	1.02	34.6 (59.8)	- (26.6)	8.7 (26.6)
IV	551	-2671	1.65	0.96	53.0 (74.2)	8.9 (33.0)	9.2 (33.0)

Notes:

(1) X < N indicates safe condition.

(2) Parenthetical values are stress allowables.

Table 6.7-10 Ice Basket Plate Stress Summary

Load Case No.	Horiz. Load H (lbf)	Vert. Load V (lbf)	Load Case Factor N	Point 1 Interaction Formula Value[1] X	Point 2 Interaction Formula Value[1] X
I	251	2638	1.0	0.25	0.27
II	300	-1596	1.33	0.23	0.29
III	251	3028	1.33	0.28	0.27
IV	551	-2671	1.65	0.42	0.53

Notes:

(1) $X \leq N$ indicates safe condition.

Table 6.7-11 Ice Basket V-Bolt Stress Summary

Load Case No.	Horiz. Load H (lbf)	Vert. Load V (lbf)	Tensile Stress f_b (10^3 psi)
I	521	2638	42.8 (78.0)[1]
II	300	-1596	55.1 (103.7)
III	251	3028	42.8 (103.7)
IV	551	-2671	65.6 (128.7)

Notes:

[1]Parenthetical values are stress allowables.

Table 6.7-12 Ice Basket - Basket End Stress Summary

Load Case No.	Horiz. Load H (lbf)	Vert. Load H (lbf)	Load Case Factor N	Point 1 Interaction Formula Value X[1]	Point 2 Interaction Formula Value X[1]
I	251	2638	1.0	0.74	0.97
II	300	1596	1.33	0.85	0.63
III	251	3028	1.33	0.76	1.10
IV	551	2671	1.65	1.56	1.08

Notes:

[1] $X \leq N$ indicates safe condition.

Table 6.7-13 Ice Bucket Coupling Screw Stress Summary3 Inch Elevation[1]

Load Case No.	Horiz. Load H (lbs)	Vert. Load V (lbs)	Screw Bending Stress f_b (ksi)	Screw Shear Stress f_v (ksi)	Basket Bearing Stress f_p (ksi)	Shear Tear-Out Stress f_{vt} (ksi)
I	251	2638	65.8 (85.8)[2]	12.0 (52.0)	16.8 (28.8)	4.3 (12.8)
II	300	-1596	43.1 (114.1)	7.8 (69.2)	11.0 (38.3)	2.8 (17.0)
III	251	3028	74.7 (114.1)	13.6 (69.2)	19.1 (38.3)	4.8 (17.0)
IV	551	-2671	73.1 (141.6)	13.3 (85.8)	18.7 (47.5)	4.7 (21.1)

Notes:

[1]Above top of lower support structure.

[2]Parenthetical values are stress allowables.

Table 6.7-14 Ice Bucket Coupling Screw Stress Summary12 Foot Elevation[1]

Load Case No.	Horiz. Load H (lbs)	Vert. Load V (lbs)	Screw Bending Stress f_b (ksi)	Screw Shear Stress f_v (ksi)	Basket Bearing Stress f_p (ksi)	Basket Tear-Out Stress f_{vt} (ksi)
I	818	1977	81.8 (85.8)[2]	14.9 (52.0)	20.9 (28.8)	5.3 (12.8)
II	289	-1198	40.2 (114.1)	7.3 (64.2)	10.3 (38.3)	2.6 (17.0)
III	818	2271	88.5 (114.1)	16.1 (64.2)	22.6 (38.3)	5.7 (17.0)
IV	1108	-2004	95.3 (141.6)	17.4 (85.8)	24.4 (47.5)	6.2 (21.1)

Notes:

[1]Above top of lower support structure.

[2]Parenthetical values are stress allowables.

Table 6.7-15 Ice Basket Coupling Screw Stress Summary 24 Foot Elevation[1]

Load Case No.	Horiz. Load H (lbs)	Vert. Load V (lbs)	Screw Bending Stress f_b (ksi)	Screw Shear Stress f_v (ksi)	Basket Bearing Stress f_p (ksi)	Basket Tear-Out Stress f_{vt} (ksi)
I	1122	1319	82.1 (85.8)[2]	15.0 (52.0)	21.0 (28.8)	5.3 (12.8)
II	233	-799	29.0 (114.1)	5.3 (64.2)	7.4 (38.3)	1.9 (17.0)
III	1122	1513	86.5 (114.1)	15.8 (69.2)	22.1 (38.3)	5.6 (17.0)
IV	1355	-1335	93.2 (141.6)	17.0 (85.8)	23.9 (47.5)	6.0 (21.1)

Notes:

[1]Above top of lower support structure.

[2]Parenthetical values are stress allowables.

Table 6.7-16 Ice Bucket Coupling Screw Stress Summary 36 Foot Elevation[1]

Load Case No.	Horiz. Load H (lbs)	Vert. Load V (lbs)	Screw Bending Stress f_b (ksi)	Screw Shear Stress f_v (ksi)	Basket Bearing Stress f_p (ksi)	Basket Tear-Out Stress f_{vt} (ksi)
I	1161	658	66.9[2] (85.8)	12.2 (52.0)	17.1 (28.8)	4.32 (12.8)
II	176	-371	16.4 (114.1)	3.0 (64.2)	4.2 (38.3)	1.1 (17.0)
III	1161	757	69.1 (114.1)	12.6 (69.2)	17.7 (38.3)	4.5 (17.0)
IV	1338	-639	74.4 (141.6)	13.6 (85.8)	19.0 (47.5)	4.8 (21.1)

Notes:

[1]Above top of lower support structure.

[2]Parenthetical values are stress allowables.

Table 6.7-17 Crane And Rail Assembly Design Loads

Normal Operation	
Crane Weight (excluding rails)	7200 lbs
Maximum Capacity During Plant Erection	6000 lbs(each of two cranes)
Maximum Capacity	6000 lbs(one crane)
Maximum Load Expected	2400 lbs

Table 6.7-18 Refrigeration System Parameters
(Sheet 1 of 2)

1.0	General - per twin containment station	
	Cooling water temperature, maximum design	85°F
	Number of ice condenser units	2
2.0	Refrigeration - per twin containment station	
2.1	Glycol Chilling Machines - 5 dual packages installed	
	Refrigeration capacity per chiller (half-pkg), nominal	25 tons*
	Total plant capacity, nominal, 5 x 2 x 25	250 tons*
	Glycol flow per evaporator, normal	~127 gpm
	Glycol flow per evaporator at max. ΔP	200 gpm
	Glycol pressure, maximum design	150 psig
	Pressure drop through evaporator, normal	16 feet
	Maximum allowable ΔP through evaporator	40 feet
	Glycol entering temperature, estimated	2°F
	Glycol exit temperature	-5°F
	Cooling water flow per condenser, normal	110 gpm*
	Total cooling water flow, 5 x 2 x 110	1100 gpm*
	Cooling water pressure, maximum design	150 psig
	Pressure drop through condenser	3.6 feet
	Approximate refrigerant charge per chiller	150 lbs
	Refrigerant	R-502
2.2	Glycol Circulation Pumps - 6 installed; 4 required	
	Design flow per pump	190 gpm
	Total design capacity, 6 x 190	1140 gpm
	TDH at design flow	220 feet**
	Shut-off head	250 feet
	NPSH required at design point	~12 feet
2.3	Pressure Relief Valves	
2.3.1	External Headers 2 - installed	
	Set pressure (for thermal expansion of glycol)	150 psig
	Capacity at set pressure (each)	2.9 gpm
2.3.2	Floor Cooling System Heater (1 per containment)	
	Set pressure	180 psig

* Nominal refrigeration rating based on 85E F cooling water.

** During preoperational testing with glycol, the Glycol Circulation Pumps did not meet vendor pump performance curve. However, review of the test data indicates the pumps will deliver sufficient flow and head to satisfy operations requirements and test results are acceptable.

Table 6.7-18 Refrigeration System Parameters Continued
(Sheet 2 of 2)

2.4	Refrigeration Medium (glycol) - UCAR Thermofluid 17 or equal			
	Concentration, ethylene glycol in water - 50 weight % or 47.8 volume %			
	At temperature:	-5EF	0EF	100EF
	Specific gravity	1.083	1.082	1.056
	Absolute viscosity (centipoises)	25.0	20.5	2.3
	Kinematic viscosity (centistokes)	23.1	18.9	2.18
3.0	Ice Condenser (per one containment unit)			
3.1	Ice Bed			
	Amount of ice initially stored per unit, nominal			3.0×10^6lbs
	Minimum amount of ice			2.125×10^6lbs
	Ice displacement per year, design objective			2%
	Design predicted ice displacement per year to wall panels for normal operation			<0.3%
	Ice melt during maximum LOCA, calculated, approx.			10^6lbs.
	Temperature of ice & static air			15EF nominal
	Pressure at lower doors due to cold head, nominal			1 psf
	Inlet opening pressure			1 psf
3.2	Air Handling Units - 30 dual packages installed Containment			
	Refrigeration requirements per containment, calculated, nominal			51.5 tons
	Gross capacity per dual package rated			2.5 tons
	Glycol entering temperature, approx.			-5EF
	Glycol exit temperature, approx.			1EF
	Glycol flow per air handler (1/2 package)			6 gpm
	Total glycol flow, 30 x 2 x 6			360 gpm
	Glycol pressure drop, estimated			50 feet
	Air blower head			2' H_2O
	Air entering temperature, estimated			15EF
	Air exit temperature			10EF

Table 6.7-19 Lower Inlet Door Design Parameters And Loads

A.	**Normal Operation**	
	Temperature, Lower Compartment, EF	120, Maximum
	Temperature, Ice Bed, EF	10, Minimum
	Pressure across Doors, psf	1.0, Nominal
B.	**Seismic**	
	Response of Crane Wall at Door Elevation	
	Horizontal, 1/2 SSE, g	0.20
	Vertical, 1/2 SSE, g	0.05
	Horizontal, SSE, g	0.40
	Vertical, SSE, g	0.10
C.	**Accident Conditions**	
	Temperature, Lower Compartment, EF	250, Maximum
	Pressure across Doors, psf (refer to Figure 6.7-16)	1.0, Nominal

Table 6.7-20 Design Loads And Parameters Top Deck

Plant Parameters	
Ambient temperature before cooldown, maximum °F	100
Ambient temperature, upper surface and hinge bar, range, °F	75-100
Ambient temperature, lower surface, minimum, °F	15
Post-LOCA temperature, lower surface, minimum, °F	15
Post-LOCA temperature (no ΔP applied), maximum, °F	190
Dead Weight	
Air handling unit and support structure, lbs/bay	2500
Grating, lbs per ft^2	7.7
Blanket panel, lbs per ft^2	1.33
Hinge bar, lbs per ft	53
Static design equivalent of live load (personnel) traffic), psf	100
LOCA Loading	
Maximum drag load on horizontal beam surfaces, lbs/ft^2	177
Maximum drag load on grating, lbs/ft^2	25.7
Maximum back pressure following LOCA, psi	0.28
Maximum drag load on AHU, lbs	1,250

Note:

(1)Margin and dynamic load factor are to be applied to tabulated values as appropriate.

Table 6.7-21 Summary Of Results Upper Blanket Door Structural Analysis - Loca

Item	Area	Code Allowable Stress Max. Calculated Stress	Design[1] Basis
1	Skin and bands, direct tension	4.17	B
2	Hinge bar - bending	6.30	A
3	Anchor bolts - tension	6.50	C
4	Floor grating - bending	4.55	D
5	Insulation tip stress - tear - tensile	2.01 16.70	D

Notes:

[1]Key to Design Basis

A. Allowable value per AISC-69 limits

B. ASTM-177 minimum tensile with AISC allowable

C. ASTM-A325 minimum tensile with AISC allowable

D. Strength values per Manufacturer's literature

Table 6.7-22 Design Loads And Parameters Intermediate Deck

A.	**Normal Operations**	
	Ambient temperature before cooldown, maximum, °F	100
	Ambient temperature, minimum, °F	15
	Temperature differential across deck, estimated, °F	5
B.	**Dead Weight**	
	Panel, lbs/ft^2, maximum	5.5
	Static design equivalent of live load (personnel traffic), psf	100
C.	**Accident Conditions**	
	Post-LOCA temperature (no ΔP applied), maximum, °F	190

Table 6.7-23 Summary Of Waltz Mill Tests

Compaction Tests

One foot diameter wire mesh baskets, loaded with flake ice to various heights, lead weights added to simulate additional height of ice.

Test	Started	Terminated	Length of Test (months)	Equivalent Height of Bed (feet)	Compaction (% Volume in First Year)
D'	2/21/69	8/28/70	18.0	22	24.5
E'	2/21/69	8/28/70	18.0	7.5	5.5

Shear Tests

One foot diameter wire mesh baskets, loaded with flake ice to various heights, temporarily supported between two wooden discs by pegs which are removed after one month.

Test	Started	Terminated	Length of Test (months)	Actual Height of Bed (feet)	Shear Rate(1) (inches/year)
G'	9/16/69	8/28/70	11.4	5	0.9
H'	9/16/69	8/28/70	11.4	3	0.9
I'	9/16/69	8/28/70	11.4	1	0.4

Notes:

(1)Shear rate approximated based on 6 months of data; not applicable for greater than 6 months.

Table 6.7-24 Ice Condenser Rtds

Ice Bed RTDs:

	Bay No.	Radial Loc.	Elev. Above Wear Slab	Detail		Bay No.	Radial Loc.	Elev. Above Wear Slab	Detail
1	24	3	55 ft 0"	(2)	28	10	2	55 ft 0"	(1)
2	24	3	30 ft 9"	(2)	29	10	2	30 ft 9"	(1)
3	24	3	0 ft 0"	(2)	30	10	2	10 ft 6"	(1)
4	21	2	55 ft 0"	(1)	31	7	1	55 ft 0"	(1)
5	21	2	30 ft 9"	(1)	32	7	1	30 ft 9"	(1)
6	21	2	10 ft 6"	(1)	33	7	1	10 ft 6"	(1)
7	18	1	55 ft 0"	(1)	34	7	2	55 ft 0"	(1)
8	18	1	30 ft 9"	(1)	35	7	2	30 ft 9"	(1)
9	18	1	10 ft 6"	(1)	36	7	2	10 ft 6"	(1)
10	18	2	55 ft 0"	(1)	37	7	3	55 ft 0"	(1)
11	18	2	30 ft 9"	(1)	38	7	3	30 ft 9"	(1)
12	18	2	10 ft 6"	(1)	39	7	3	10 ft 6"	(1)
13	18	3	55 ft 0"	(1)	40	4	2	55 ft 0"	(1)
14	18	3	30 ft 9"	(1)	41	4	2	30 ft 9"	(1)
15	18	3	10 ft 6"	(1)	42	4	2	10 ft 6"	(1)
16	15	2	55 ft 0"	(1)	43	1	3	55 ft 0"	(2)
17	15	2	30 ft 9"	(1)	44	1	3	30 ft 9"	(2)
18	15	2	10 ft 6"	(1)	45	1	3	0 ft 0"	(2)
19	13	1	55 ft 0"	(6)	46	Az107E	N/A	58 ft 6"	(3)
20	13	1	30 ft 9"	(6)	47	Az107E	N/A	58 ft 6"	(4)
21	13	1	10 ft 6"	(6)	48	Spare	N/A	N/A	N/A
22	13	2	55 ft 0"	(1)					
23	13	2	30 ft 9"	(1)					
24	13	2	10 ft 6"	(1)					
25	13	3	55 ft 0"	(2)					
26	13	3	30 ft 9"	(2)					
27	13	3	0 ft 0"	(2)					

Table 6.7-24 Ice Condenser Rtds

Floor Cooling RTDs:

	Bay No.	Radial Loc.	Elev. Above Wear Slab	Detail		Bay No.	Radial Loc.	Elev. Above Wear Slab	Detail
1	1	2	0 ft 0"	(7)	13	13	2	0 ft 0"	(7)
2	2	2	0 ft 0"	(7)	14	14	2	0 ft 0"	(7)
3	3	2	0 ft 0"	(7)	15	15	2	0 ft 0"	(7)
4	4	2	0 ft 0"	(7)	16	16	2	0 ft 0"	(7)
5	5	2	0 ft 0"	(7)	17	17	2	0 ft 0"	(7)
6	6	2	0 ft 0"	(7)	18	18	2	0 ft 0"	(7)
7	7	2	0 ft 0"	(7)	19	19	2	0 ft 0"	(7)
8	8	2	0 ft 0"	(7)	20	20	2	0 ft 0"	(7)
9	9	2	0 ft 0"	(7)	21	21	2	0 ft 0"	(7)
10	10	2	0 ft 0"	(7)	22	22	2	0 ft 0"	(7)
11	11	2	0 ft 0"	(7)	23	23	2	0 ft 0"	(7)
12	12	2	0 ft 0"	(7)	24	24	2	0 ft 0"	(7)

		Bay No.	Radial Loc.	Elev. Above Wear Slab	Detail
Temperature Switches:	1	1	2	57 ft 0"	(T)
	2	4	2	57 ft 0"	(T)
	3	7	2	57 ft 0"	(T)
	4	18	2	57 ft 0"	(T)
	5	21	2	57 ft 0"	(T)
	6	24	2	57 ft 0"	(T)
Wall Panel RTDs:	25	1		10 ft 6"	(8)
	26	8		10 ft 6"	(8)
	27	8		1 ft 0"	(8)
	28	13		10 ft 6"	(8)
	29	13		1 ft 0"	(8)
	30	18		10 ft 6"	(8)
	31	18		1 ft 0"	(8)
	32	24		10 ft 6"	(8)

Table 6.7-24 Ice Condenser Rtds

		Bay No.	Radial Loc.	Elev. Above Wear Slab	Detail
Wear Slab RTDs:	41	1	1		(7)
	42	17	1		(7)
	43	17	1		(7)
	44	8	1		(7)
	45	8	1		(7)
	46	24	1		(7)

Detail No.:

(1) (2) (6) - Lattice-frame mtd. ice bed temp. RTD

(3) (4) - Plenum-panel mtd. RTD

(7) - Wear slab (floor) mtd. RTD

(8) - Wall panel mtd. RTD

(T) - Temperature switch

Table 6.7-25 Ice Condenser Allowable Limits (1)

Load Combination	Elastic Analysis		Fatigue	Limit Analysis(3) (Load Factors)	Tes t (Load Factors)
	Mechanical(2)	Mechanical and Thermal			
D + OBE	S(4)	3S	AISC Part 1	1.42	1.87
D + DBA	1.33 S	N.A.	N.A.	1.3	1.43
D + SSE	1.33 S	N.A.	N.A.	1.3	1.42
D + SSE " DBA	1.65 S	N.A.	N.A.	1.18	1.3

Notes:

(1) For particular components that do not meet these limits, specific justification is provided on a case-by-case basis.

(2) Membrane (direct) stresses are #0.7 S_u (70% of ultimate stress).

(3) For mechanical loads only. Mechanical plus thermal expansion, combination, and fatigue satisfy the elastic analysis limits.

(4) S = Allowable stresses as defined in Sections 1.5 and 1.6 of the AISC Part 1 Specification.

Table 6.7-26 Selection Of Structural Steels In Relation To Prevention of Non-Ductile Fracture Of Ice Condenser Components

	Section Thickness	
Properties	**5/8-inch thick and under**	**Over 5/8-inch thick**
Energy Absorption Level(2)	None required	i) 20 ft-lb CVN at -20°F for steel over 36,000 psi yield strength ii) 15 ft-lb CVN at -20°F for steel under 36,000 psi yield strength
Heat Treatment(1)	None required Steel can be used in the hot rolled condition	i) Normalizing ii) Quench and temper
Type of Steel	i) Rimmed(3) ii) Semi-Killed(4) iii) Killed(4),(5) iv) Killed - fine grain practice	i) Killed ii) Killed - fine grain practice

Notes:

(1) Hot rolled, normalized, or quenched and tempered steels are used where applicable.

(2) Charpy-V Notch (CVN) impact testing is performed in accordance with the requirements of ASTM-A370.

(3) Rimmed steel is used only for carbon steel sheet products.

(4) These types of steel are applied for components which remain within AISC Code stress limits for all load conditions.

5) Killed steels for above AISC Code stress limits are upgraded by heat treatment, e.g., bolting.

Table 6.7-27 Summary Of Watts Bar Loads - Tangential Case Obtained Using The Two-Mass Dynamic Model

			Design Values	
Earthquake Condition and Direction	Wall Panel Load - kips	Impact Load - lbs	Wall Panel Load - kips	Impact Load - lbs
OBE, N-S	4.9	328	9.8	1165
OBE, E-W	5.1	448	9.8	1165
SSE, N-S	6.6	663	11.3	1400
SSE, E-W	7.7	625	11.3	1400

Table 6.7-28 Summary Of Watts Bar Loads - Radial Case Obtained Using The Two-Mass Dynamic Model

			Design Values	
Earthquake Condition and Direction	Wall Panel Load - kips	Impact Load - lbs	Wall Panel Load - kips	Impact Load - lbs
OBE, N-S	6.05	261	13.5	1165
OBE, E-W	6.5	292	13.5	1165
SSE, N-S	11.3	540	15.5	1400
SSE, E-W	10.5	473	15.5	1400

Table 6.7-29 Summary Of Load Results Of Five Non-Linear Dynamic Models

Maximum Load Average of 4 Earthquakes	2-Mass Model	3-Mass Model	9-Mass Model	48-Foot Beam Model	Phasing Mass Model	Design Load
Tangential Impact Load	663	1,060		920	795	1,400
Tangential Wall Panel Load	7,700			10,800	5,375	11,300
Radial Impact Load	540		810	888		1,400
Radial Wall Panel Load	11,300			14,700		15,500
Link Impact Load					6,900	12,000

Table 6.7-30 Summary Of Parameters Used In The Seismic Analysis

Item	Description	Watts Bar Parameters
1.	Lower Support Stiffness	
	a. Radial Direction	670,000 lbs/in
	b. Tangential Direction	319,000 lbs/in
2.	Lattice Frame Wall Panels Combined Stiffness	
	a. Radial Direction	50,000 lbs/in
	b. Tangential Direction	24,000 lbs/in
3.	Local Impact Stiffness	
	a. Radial Direction	4.8 to 9.2 kip/in
	b. Tangential Direction	4.8 to 11.8 kip/in
4.	Ice Basket Weight with Ice	37 lbs/ft
5.	Gap Size	0.5 in
6.	Ice Basket Stiffness	
	a. Bending Rigidity (EI), where: E = modulus of elasticity, I = moment of inertia	330×10^6 lbs/in^2

THIS PAGE INTENTIONALLY BLANK

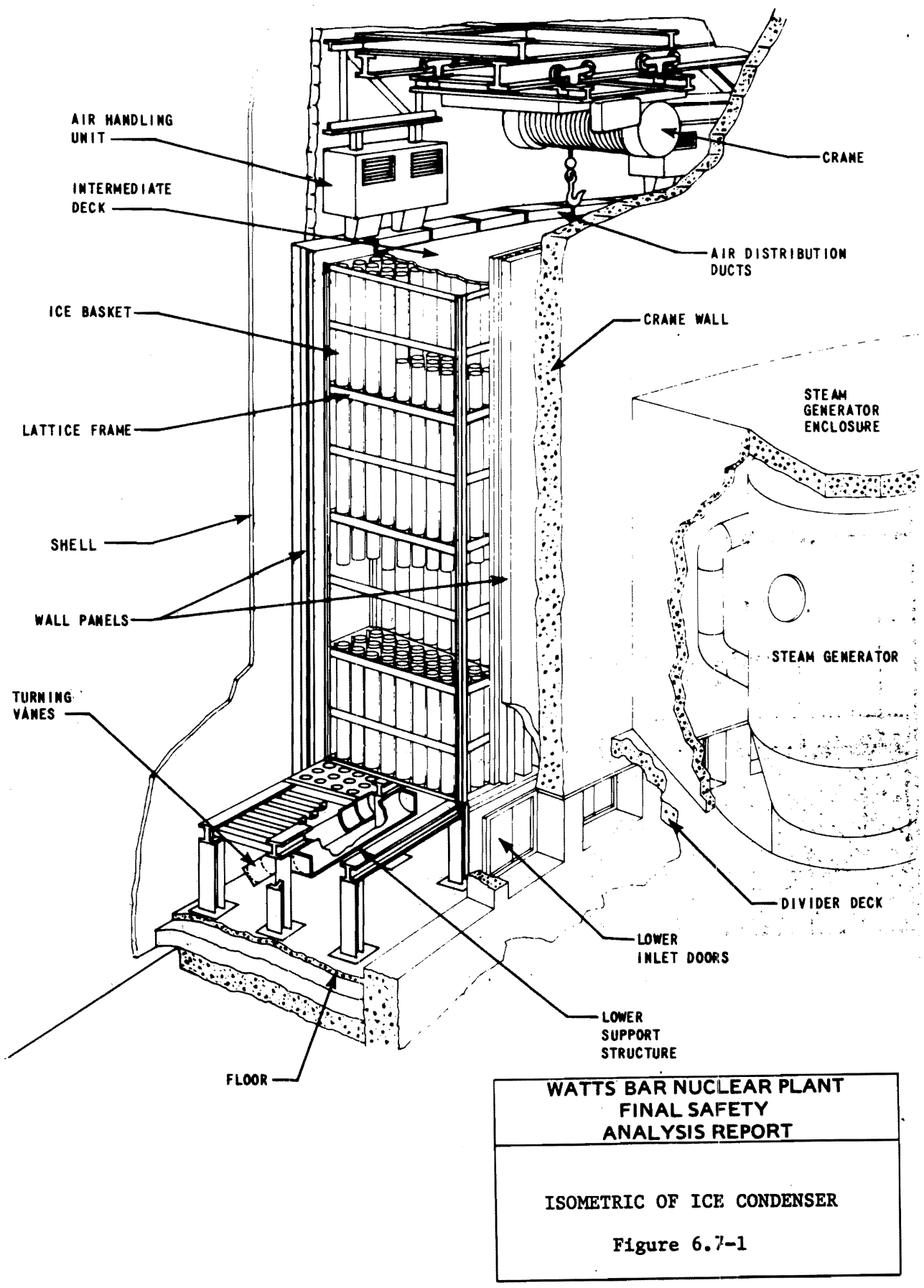

Figure 6.7-1 Isometric of Ice Condenser

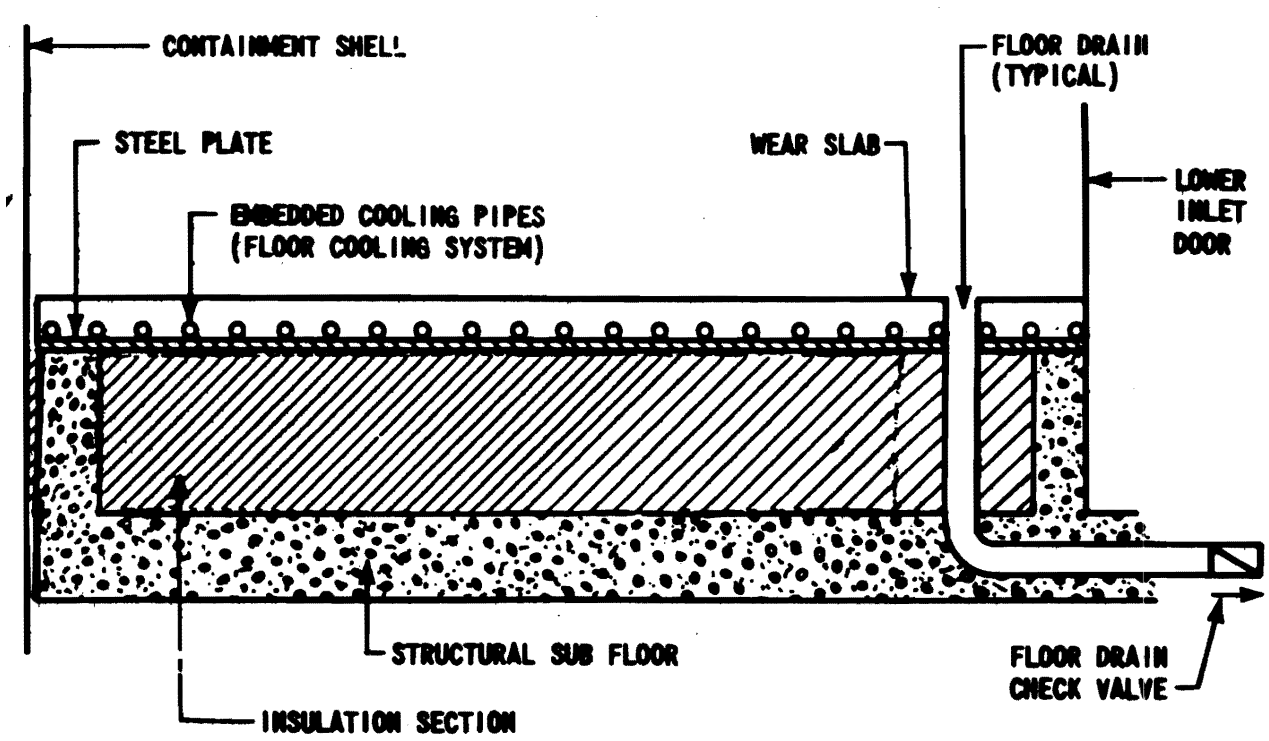

WATTS BAR NUCLEAR PLANT FINAL SAFETY ANALYSIS REPORT
FLOOR STRUCTURE Figure 6.7-2

Figure 6.7-2 Floor Structure

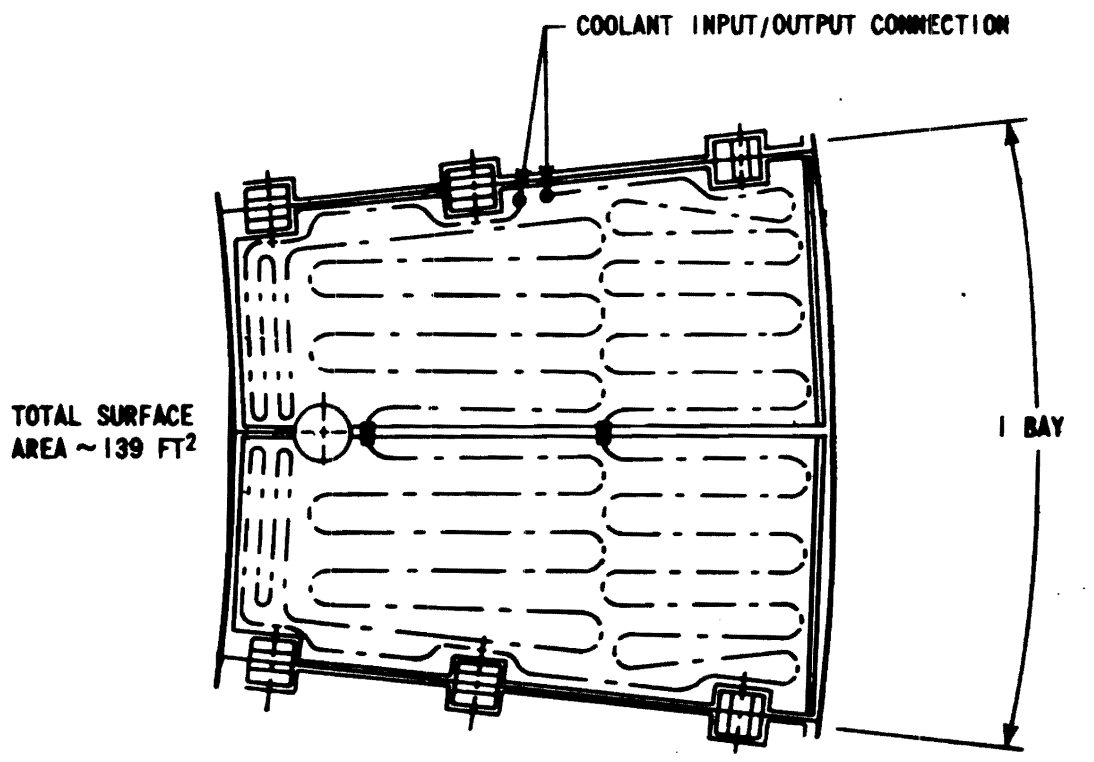

WATTS BAR NUCLEAR PLANT
FINAL SAFETY
ANALYSIS REPORT

WEAR SLAB TOP SURFACE AREA SHOWING TYPICAL COOLANT PIPING LAYOUT

Figure 6.7-3

Figure 6.7-3 Wear Slab Top Surface Area Showing Typical Coolant Piping Layout

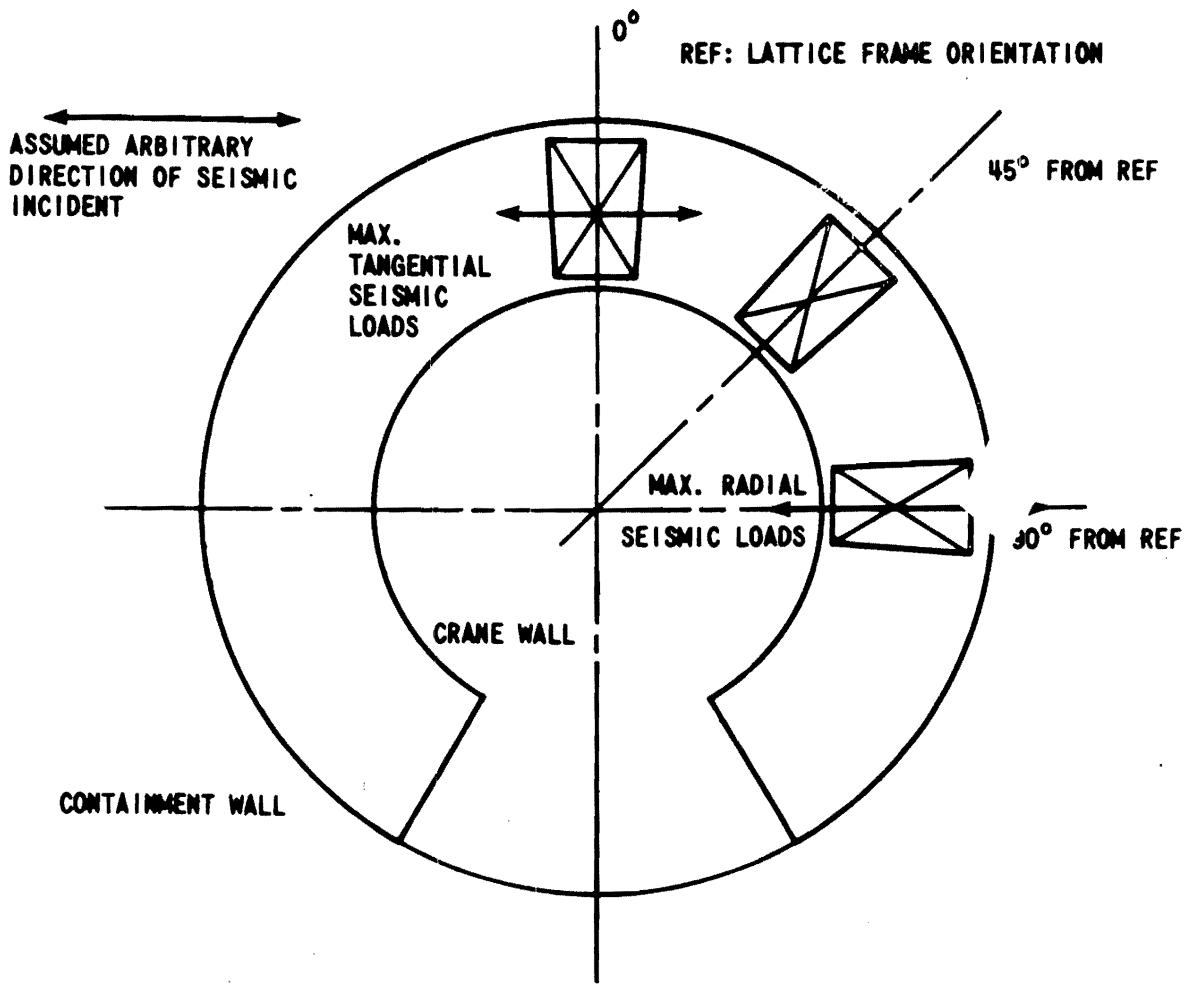

NOTES:

1. MAXIMUM TANGENTIAL AND RADIAL SEISMIC LOADS CANNOT OCCUR SIMULTANEOUSLY.
2. TANGENTIAL AND RADIAL SEISMIC LOADS 45 DEGREES FROM THE REFERENCE DIRECTION OF SEISMIC INPUT OCCUR SIMULTANEOUSLY AND THE MAGNITUDE IS THE AVERAGE OF MAXIMUM RADIAL AND MAXIMUM TANGENTIAL TIMES THE COSINE OF 45°, OR $\left(\frac{\text{RADIAL} + \text{TANGENTIAL}}{2}\right) .707$.
3. HORIZONTAL AND VERTICAL SEISMIC LOADS CAN OCCUR HORIZONTALLY.
4. BLOWDOWN LOADS, TANGENTIAL, RADIAL AND VERTICAL CAN OCCUR SIMULTANEOUSLY. RADIAL BLOWDOWN LOADS ALWAYS OCCUR IN THE DIRECTION OF THE CONTAINMENT WALL.

* In an individual lattice frame.

WATTS BAR NUCLEAR PLANT
FINAL SAFETY
ANALYSIS REPORT

LATTICE FRAME ORIENTATION

Figure 6.7-4

Figure 6.7-4 Lattice Frame Orientation

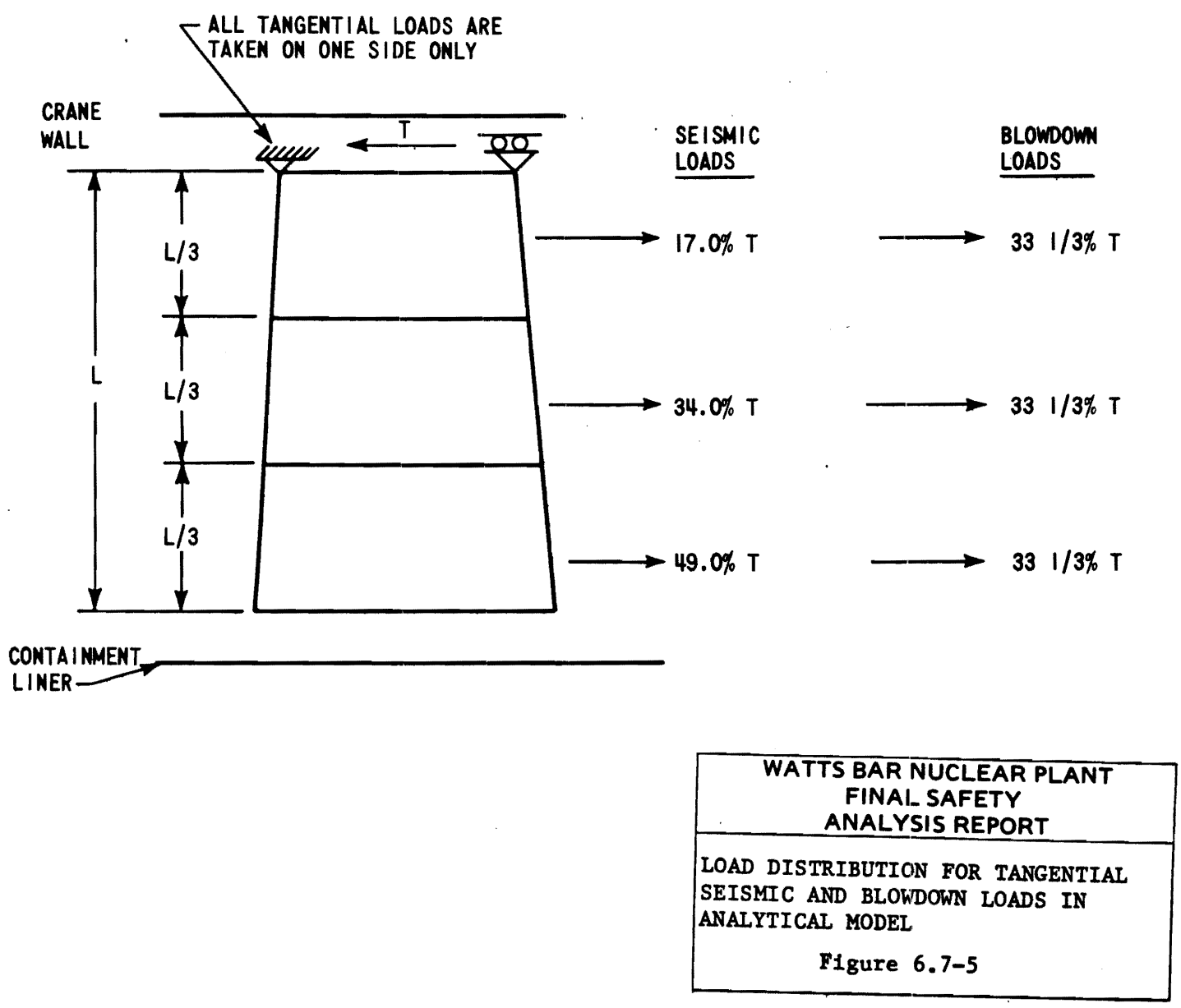

Figure 6.7-5 Load Distribution for Tangential Seismic and Blowdown Loads in Analytical Model

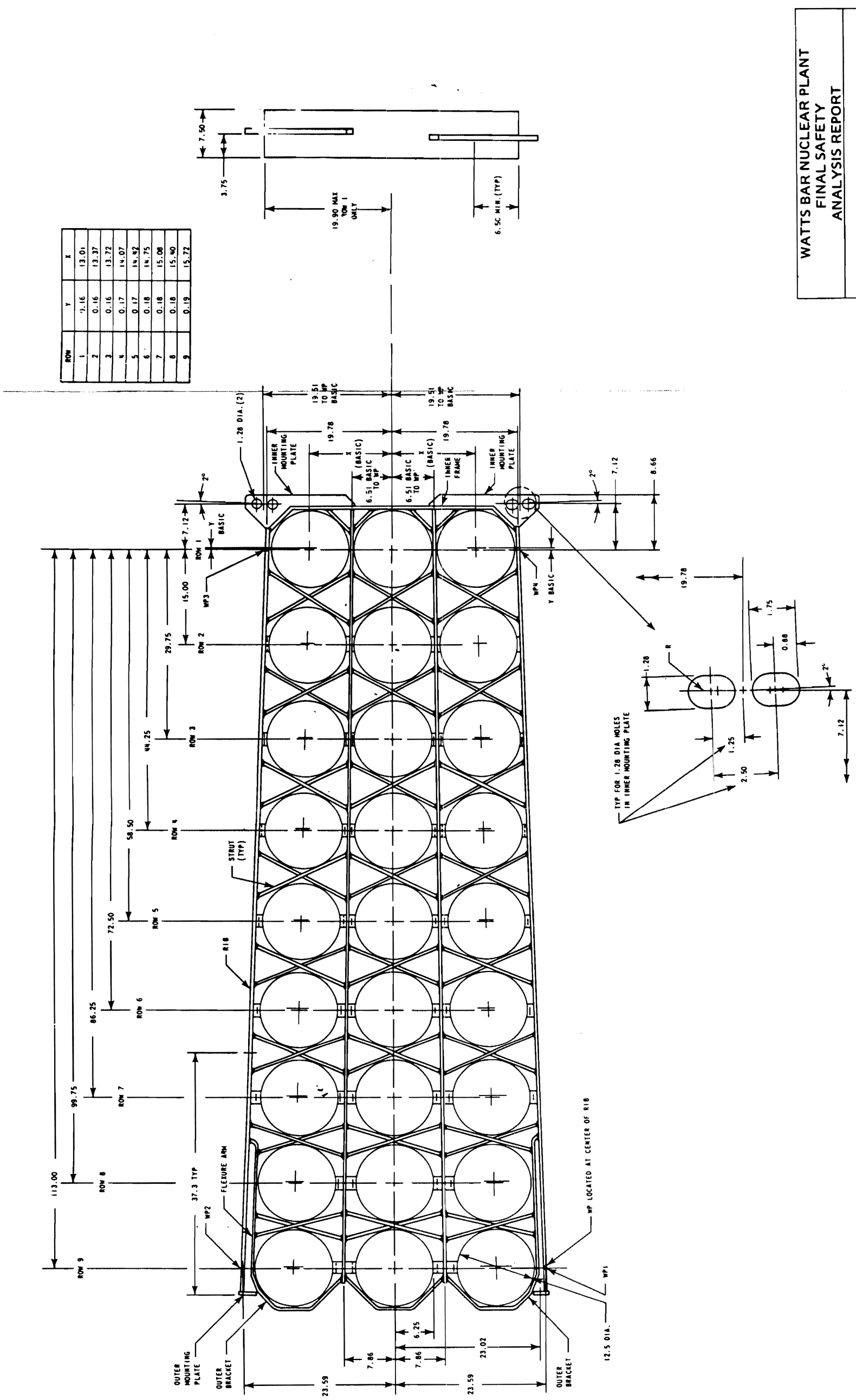

Figure 6.7-6 Lattice Frame

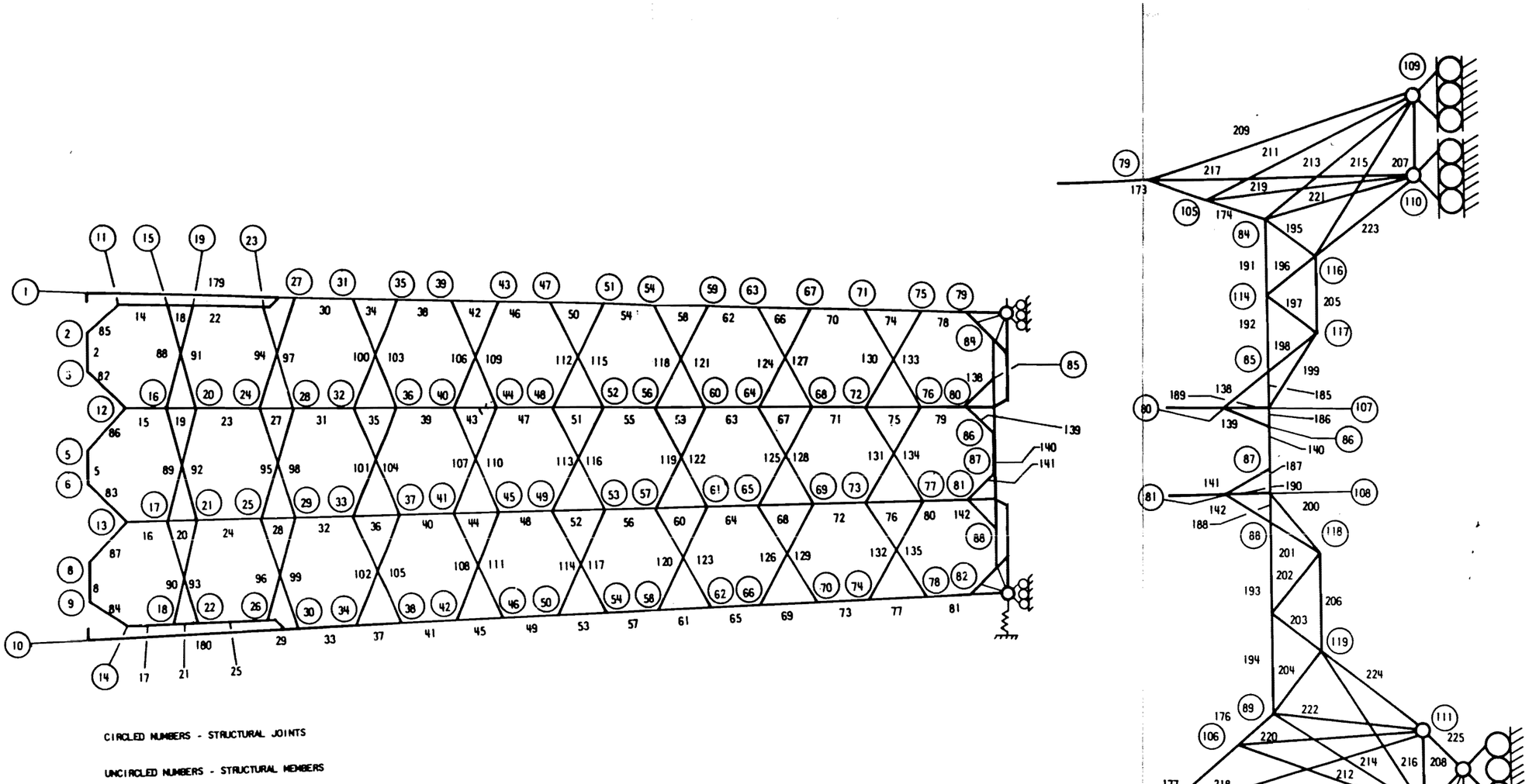

WATTS BAR NUCLEAR PLANT
FINAL SAFETY
ANALYSIS REPORT

LATTICE FRAME ANALYSIS MODEL

Figure 6.7-7

Figure 6.7-7 Lattice Frame Analysis Model

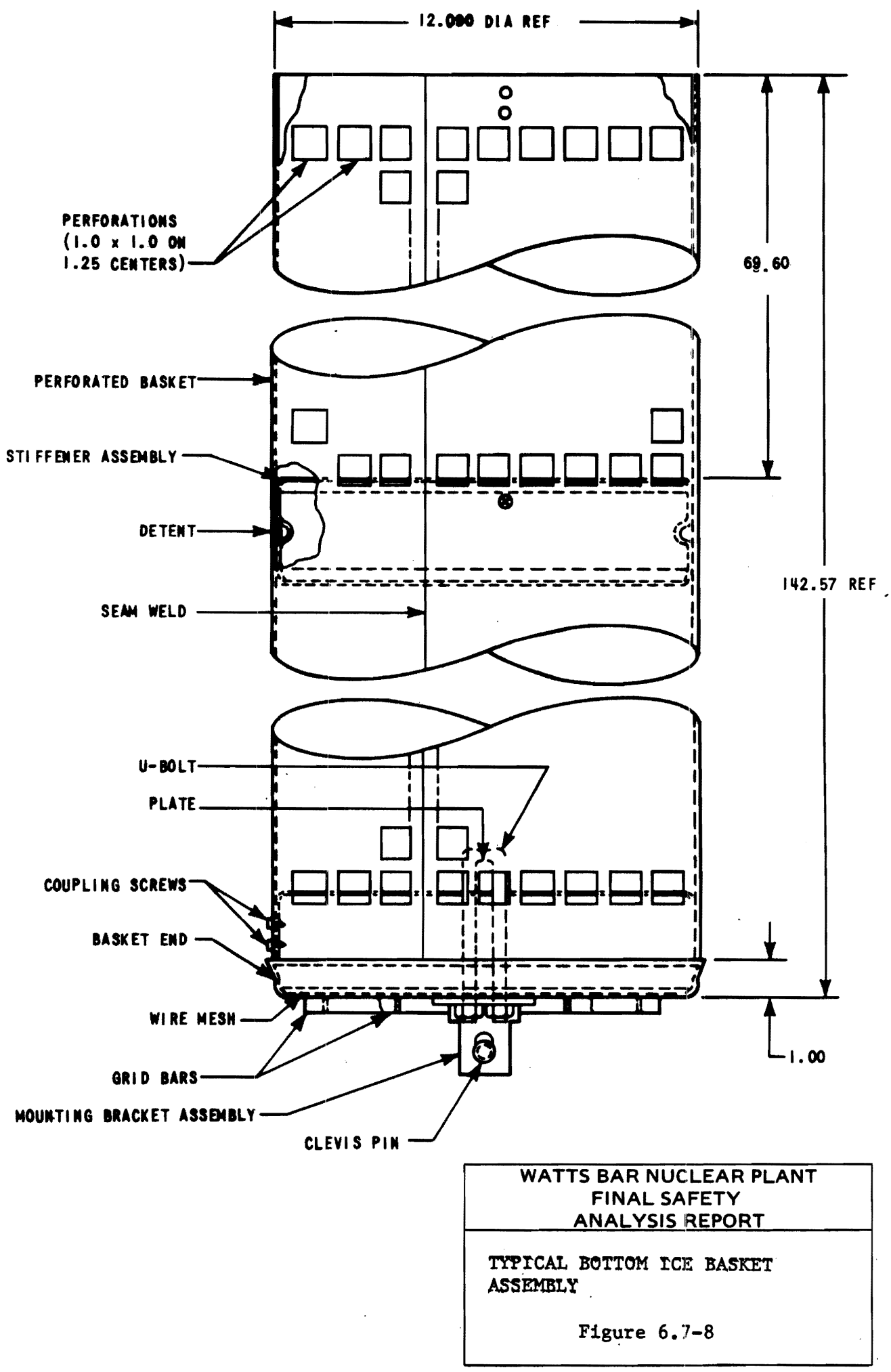

Figure 6.7-8 Typical Bottom Ice Basket Assembly

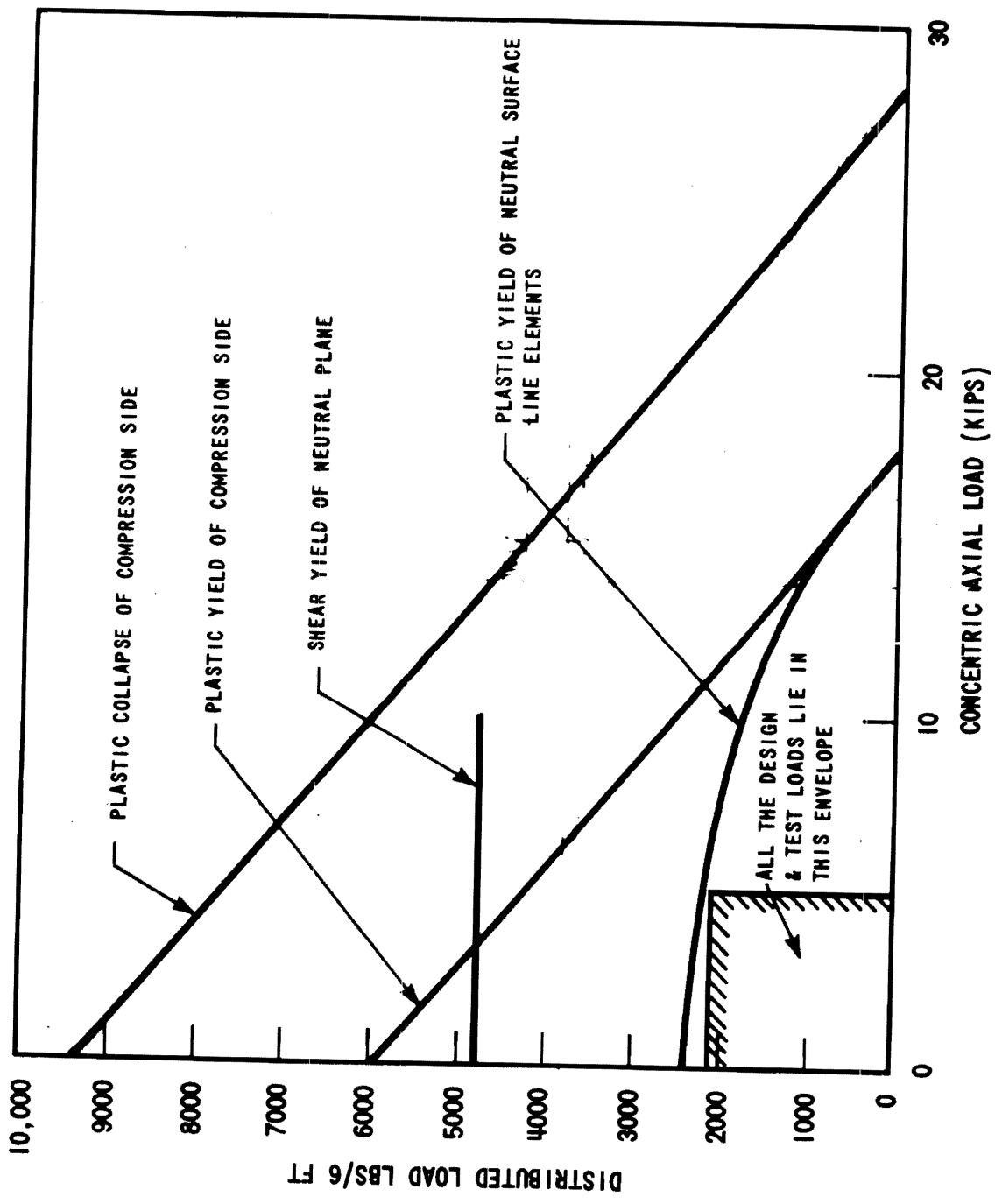

WATTS BAR NUCLEAR PLANT FINAL SAFETY ANALYSIS REPORT
COMBINATIONS OF CONCENTRIC AXIAL LOAD AND DISTRIBUTION LOAD THAT WILL CAUSE FAILURE OF A PERFORATED METAL ICE CONDENSER BASKET MATERIAL Figure 6.7-9

Figure 6.7-9 Combinations of Concentric Axial Load and Distribution Load That Will Cause Failure of a Perforated Metal Ice Condenser Basket Material

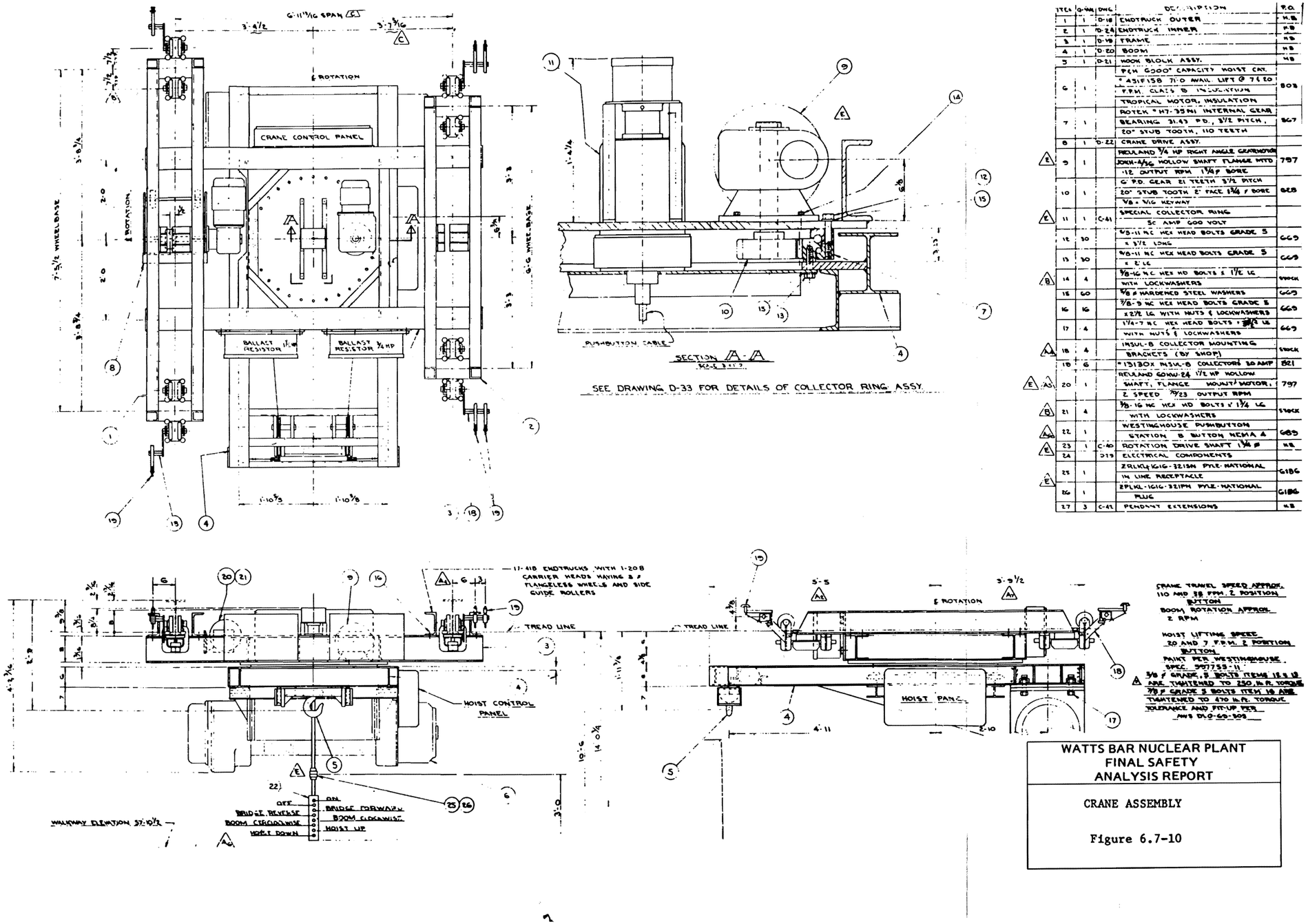

ITEM	QUAN	DWG	DESCRIPTION	P.O.
1	1	D-18	ENDTRUCK OUTER	NB
2	1	D-24	ENDTRUCK INNER	NB
3	1	D-19	FRAME	NB
4	1	D-20	BOOM	NB
5	1	D-21	HOOK BLOCK ASSY.	NB
6	1		P&H 6000# CAPACITY HOIST CAT. * 451F158 71'0 AVAIL. LIFT @ 7 & 20 F.P.M. CLASS B INSULATION TROPICAL MOTOR, INSULATION	808
7	1		ROTEK #H7-35N1 INTERNAL GEAR BEARING 31.43 P.D., 3/2 PITCH, 20° STUB TOOTH, 110 TEETH	867
8	1	D-22	CRANE DRIVE ASSY.	
9	1		REULAND 3/4 HP RIGHT ANGLE GEARMOTOR JOKH-4/36 HOLLOW SHAFT FLANGE MTD -12 OUTPUT RPM 1 3/16 P BORE	797
10	1		6" P.D. GEAR 21 TEETH 3/2 PITCH 20° STUB TOOTH 2" FACE 1 3/16 P BORE 3/8 x 3/16 KEYWAY	828
11	1	C-41	SPECIAL COLLECTOR RING 50 AMP 600 VOLT	
12	30		5/8-11 NC HEX HEAD BOLTS GRADE 5 x 3/2 LONG	669
13	30		5/8-11 NC HEX HEAD BOLTS GRADE 5 x 2" LG	669
14	4		3/8-16 NC HEX HD BOLTS x 1 1/2 LG WITH LOCKWASHERS	STOCK
15	60		5/8 # HARDENED STEEL WASHERS	669
16	16		7/8-9 NC HEX HEAD BOLTS GRADE 5 x 2 1/2 LG WITH NUTS & LOCKWASHERS	669
17	4		1 1/4-7 NC HEX HEAD BOLTS x 3 1/2 LG WITH NUTS & LOCKWASHERS	669
18	4		INSUL-8 COLLECTOR MOUNTING BRACKETS (BY SHOP)	STOCK
19	6		* 131BOX INSUL-8 COLLECTORS 50 AMP	821
20	1		REULAND 60HW-24 1 1/2 HP HOLLOW SHAFT, FLANGE MOUNT MOTOR, 2 SPEED 29/23 OUTPUT RPM	797
21	4		3/8-16 NC HEX HD BOLTS x 1 3/4 LG WITH LOCKWASHERS	STOCK
22	1		WESTINGHOUSE PUSHBUTTON STATION 8 BUTTON NEMA 4	685
23	1	C-40	ROTATION DRIVE SHAFT 1 3/16 #	NB
24		D-19	ELECTRICAL COMPONENTS	
25	1		ZRLKL-1616-3213N PYLE-NATIONAL 14 LINE RECEPTACLE	6186
26	1		ZPLKL-1616-3213PN PYLE-NATIONAL PLUG	6186
27	3	C-42	PENDANT EXTENSIONS	NB

Figure 6.7-10 Crane Assembly

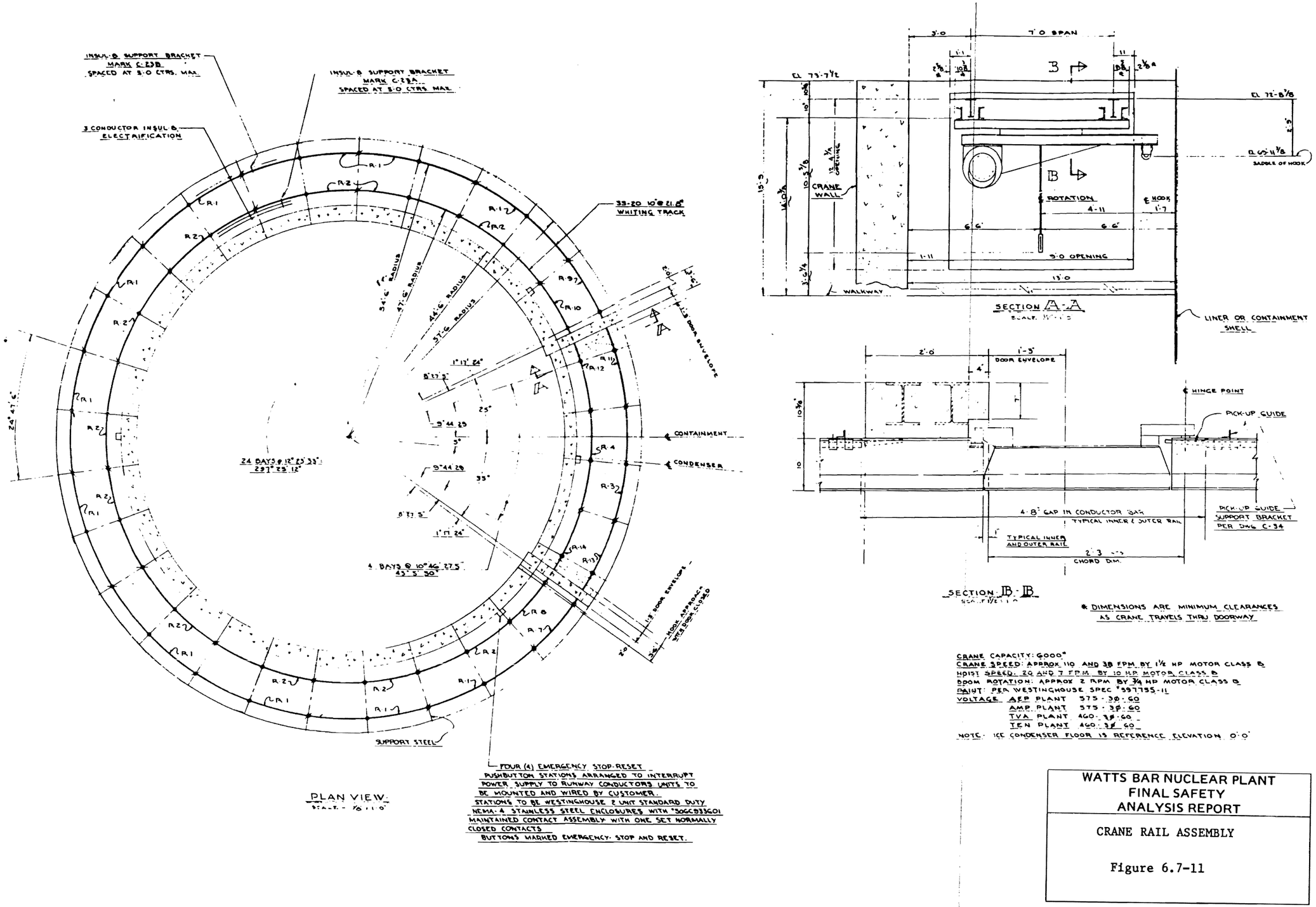

Figure 6.7-11 Crane Rail Assembly

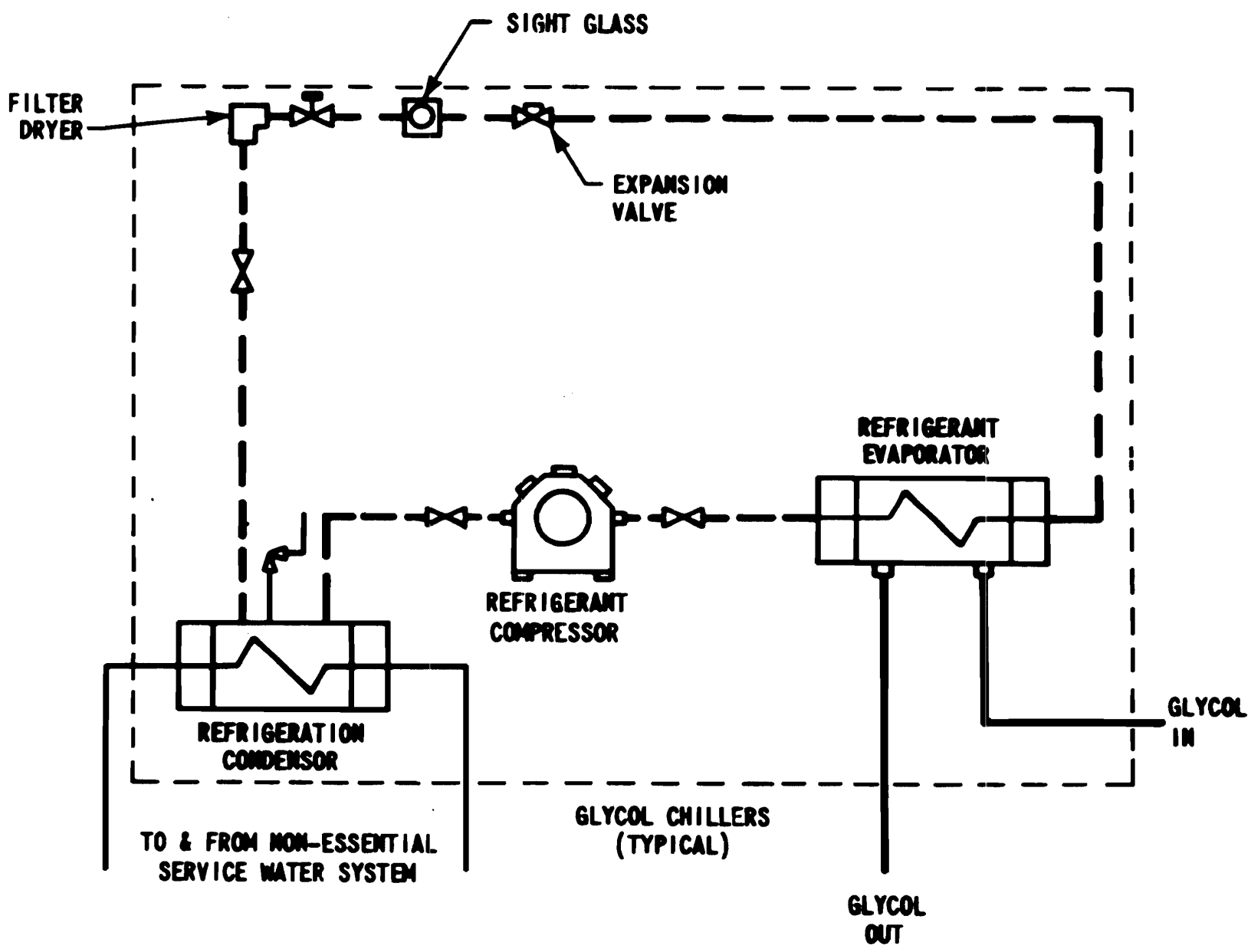

WATTS BAR NUCLEAR PLANT
FINAL SAFETY
ANALYSIS REPORT

REFRIGERANT CYCLE DIAGRAM

Figure 6.7-12

Figure 6.7-12 Refrigerant Cycle Diagram

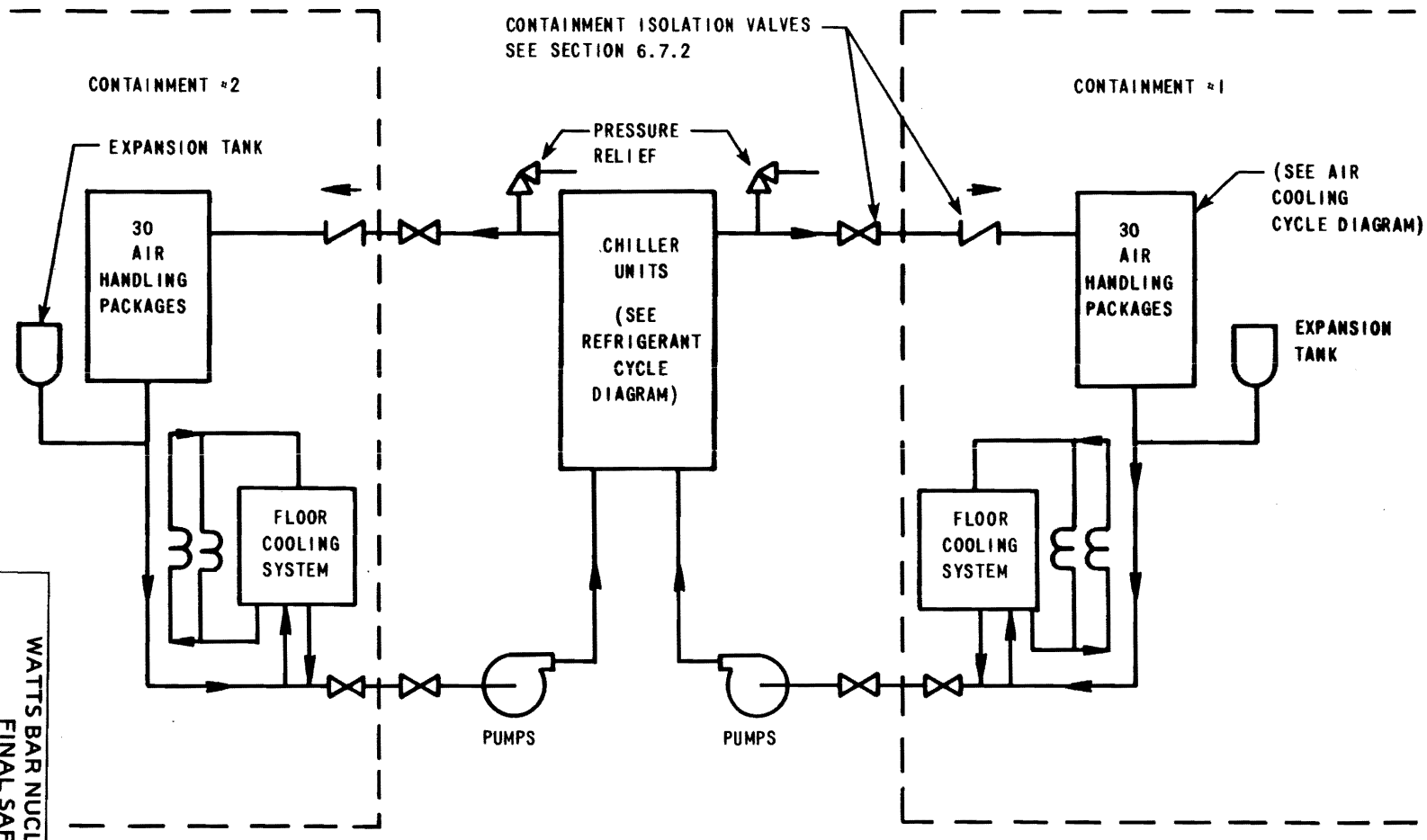

WATTS BAR NUCLEAR PLANT
FINAL SAFETY
ANALYSIS REPORT

GLYCOL CYCLE TO EACH
CONTAINMENT

Figure 6.7-13

Figure 6.7-13 Glycol Cycle to Each Containment

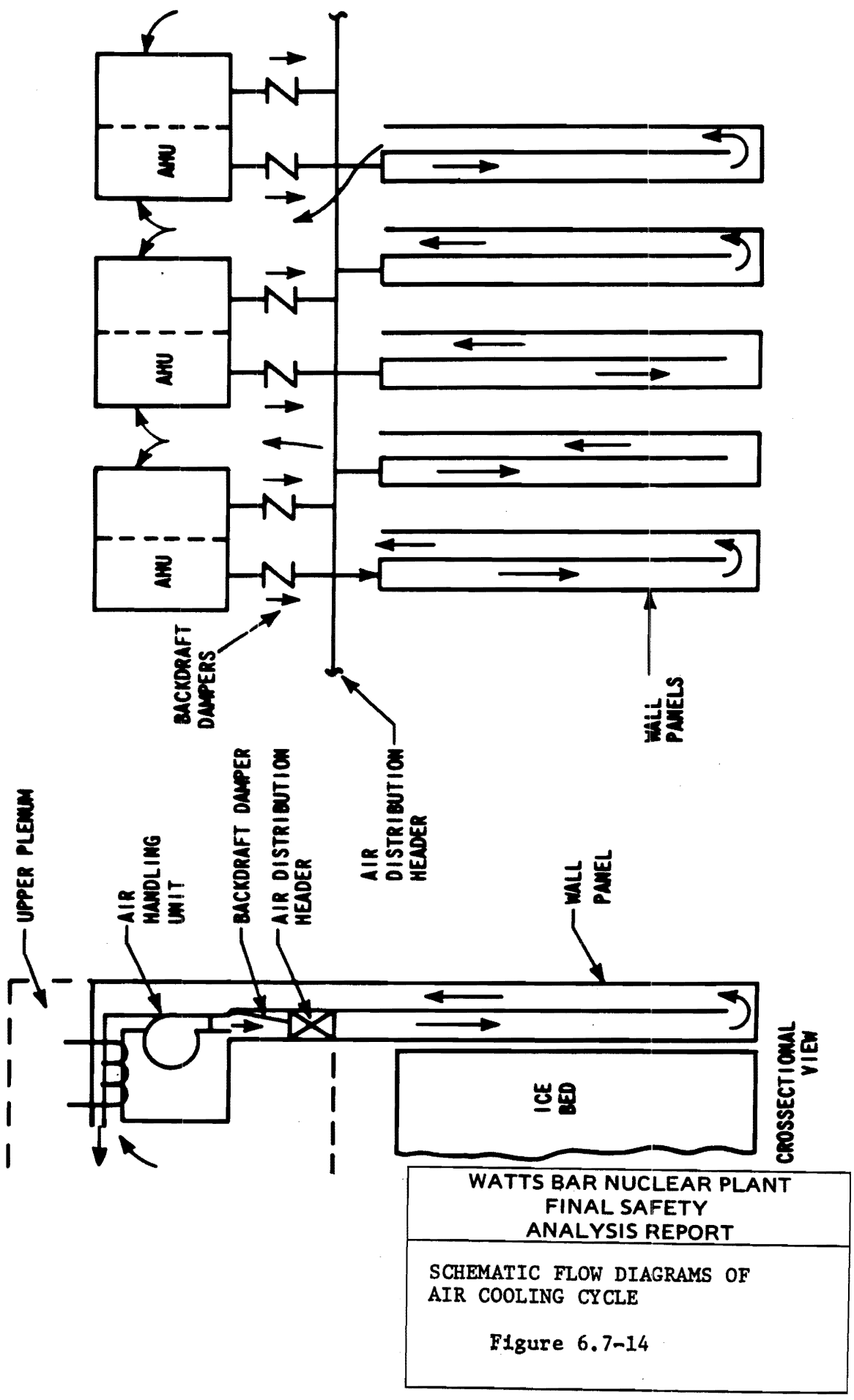

Figure 6.7-14 Schematic Flow Diagrams of Air Cooling Cycle

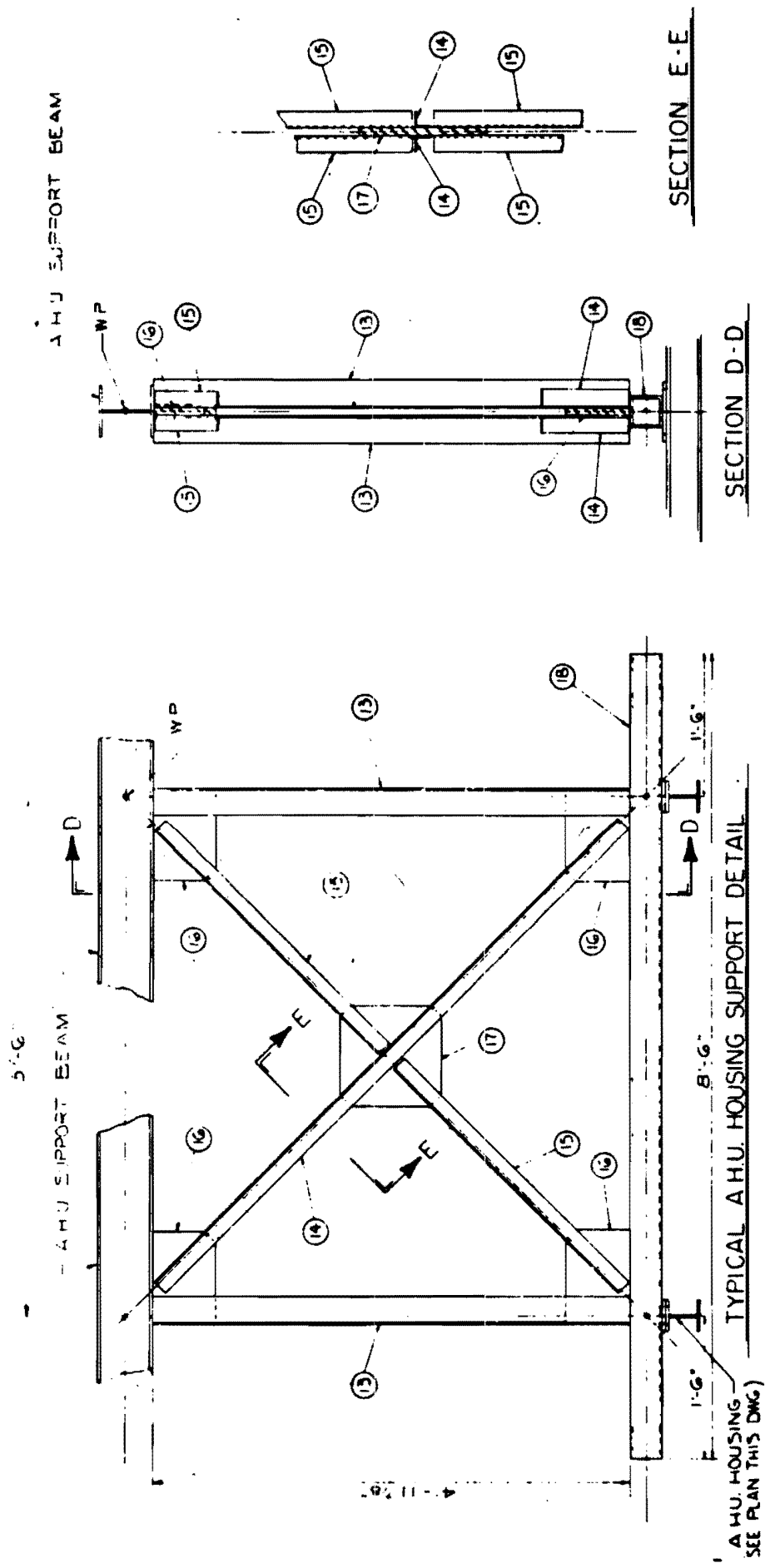

WATTS BAR NUCLEAR PLANT
FINAL SAFETY
ANALYSIS REPORT

AIR HANDLING UNIT SUPPORT STRUCTURE

Figure 6.7-15

Figure 6.7-15 Air Handling Unit Support Structure

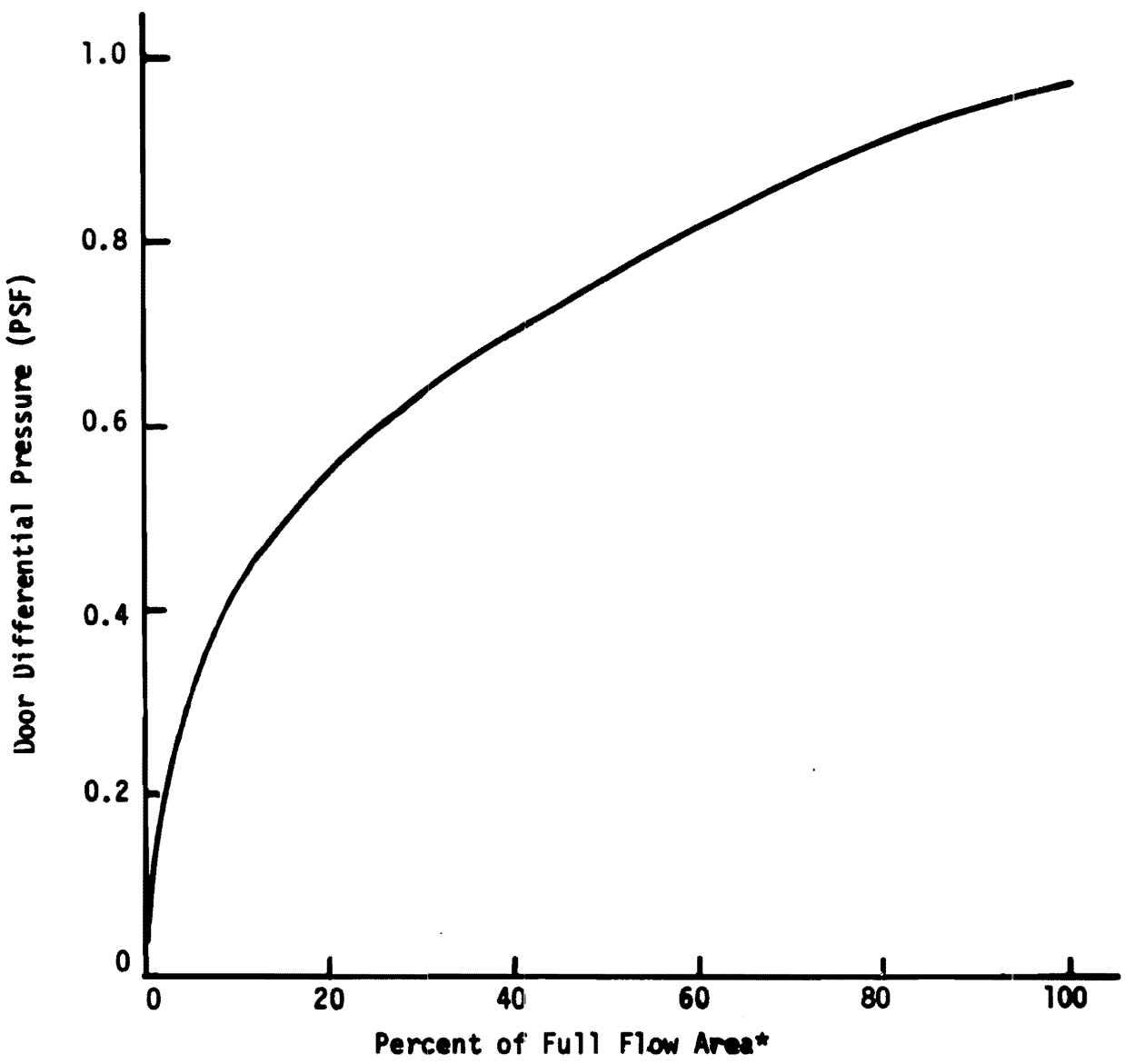

*Full Flow Area is defined as the minimum door port area with doors fully open

WATTS BAR NUCLEAR PLANT
FINAL SAFETY
ANALYSIS REPORT

FLOW AREA - PRESSURE DIFFERENTIAL

Figure 6.7-16

Figure 6.7-16 Flow Area - Pressure Differential

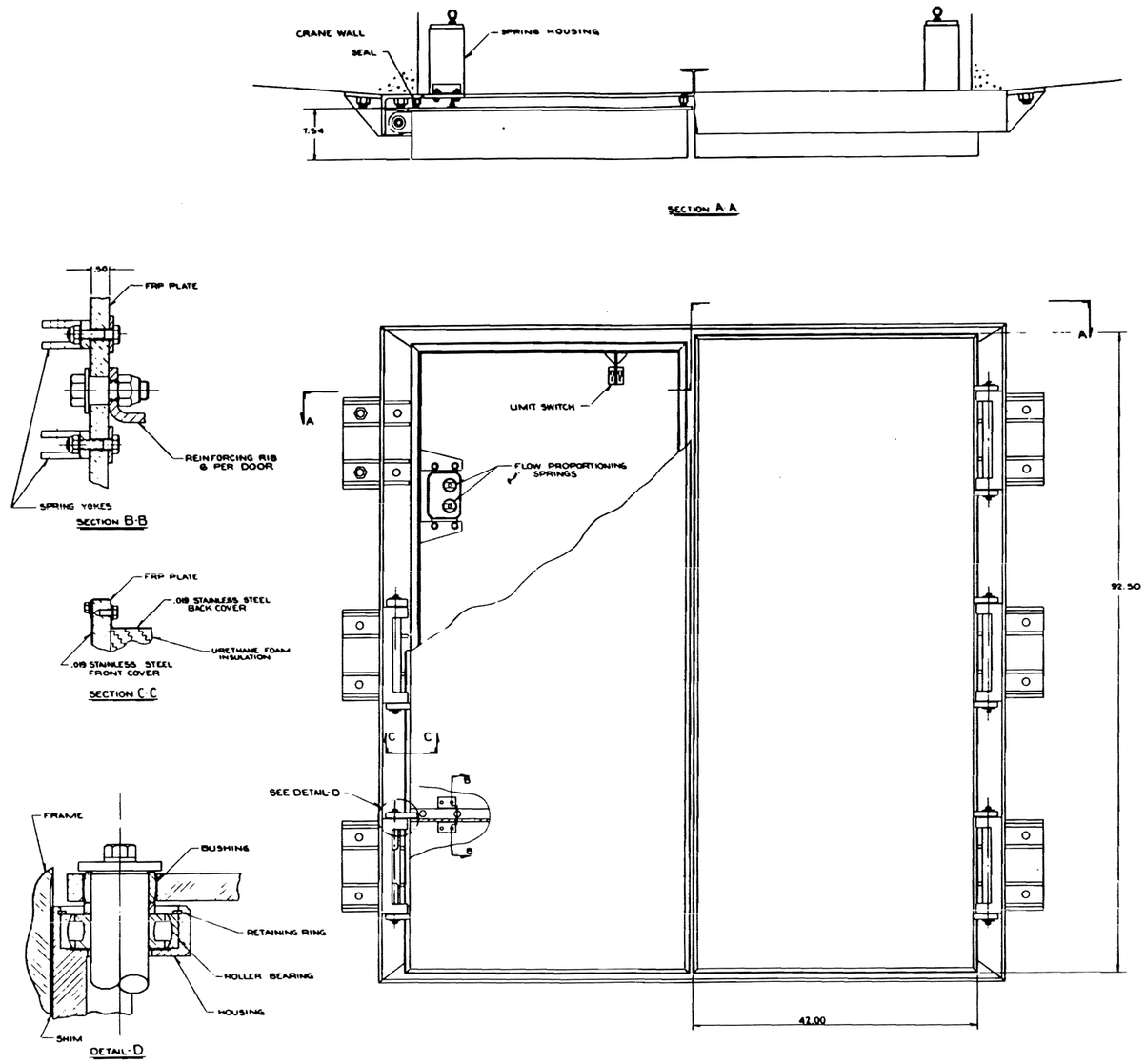

WATTS BAR NUCLEAR PLANT FINAL SAFETY ANALYSIS REPORT
LOWER INLET DOOR ASSEMBLY Figure 6.7-17

Figure 6.7-17 Lower Inlet Door Assembly

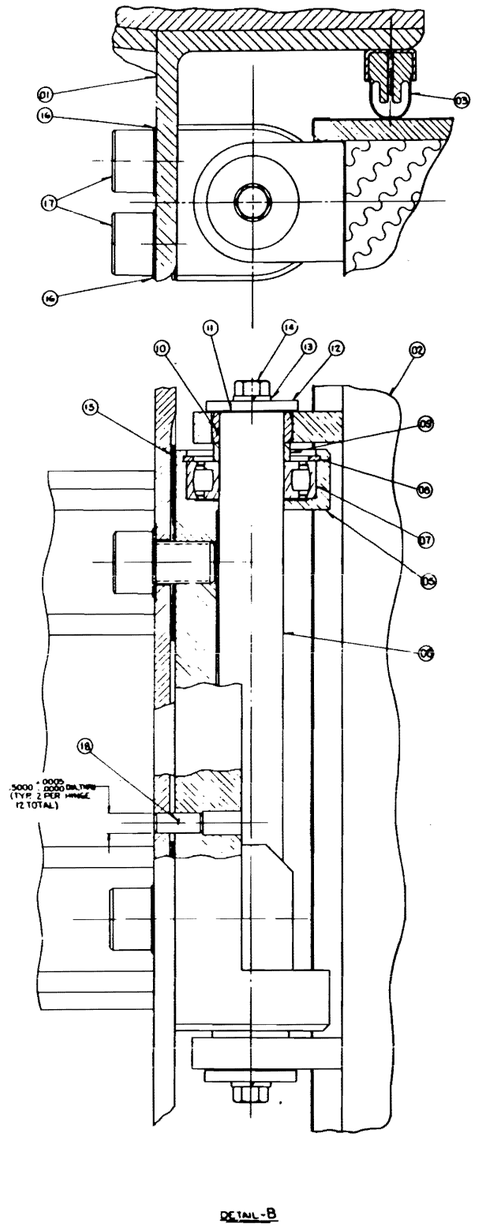

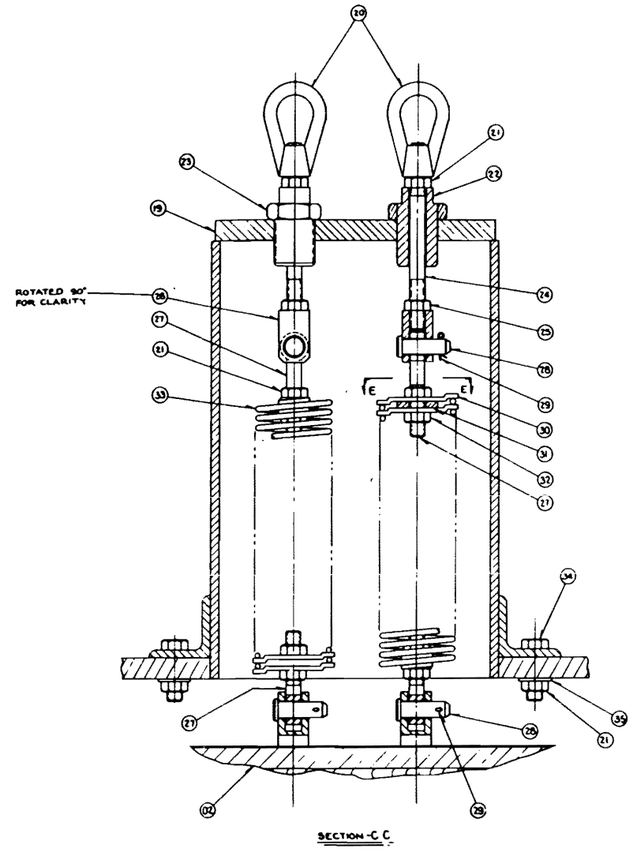

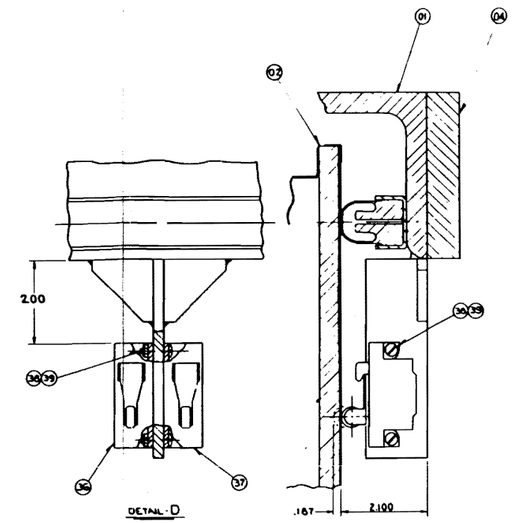

1. Door Frame Ass'y
2. Door Ass'y
3. Seal
4. Foam Gasket
5. Bearing Housing
6. Shaft
7. Bearing
8. Retaining Ring
9. Spacer
10. Bushing
11. Spacer
12. Shaft Cap
13. .980 Lock Washer (Spring Type)
14. .500 - 13 UNC - Hex Bolt x 1.00 Lg.
15. Shim
16. 1.000 Lock Washer (External Tooth)
17. 1.000 - 8 UNC - Soc. Hd. Cap SCR x 1.500 Lg.
18. Dowel Pin .5003 $^{+.0000}_{-.0002}$ Dia. x 1.000 Lg.
19. Spring Housing
20. Eye Bolt - 6-400 Size 2
21. .375 - 16 UNC - Hex Nut
22. Adj. Scr.
23. 1.000 - 12 UNF - Jam Nut
24. .375 Dia. Stud Thd. Both Ends . 375 - 16 UNC x 1.500 Lg.
25. .375 - 16 UNC Jam Nut
26. Clevis
27. Rod End #RE-376
28. Clevis Pin #PN-37
29. Cotter Pin .093 Dia. x .625 Lg.
30. Spring Clip
31. Washer 1.000 O.D. x .437 I.D. x .090 Thk.
32. Spring Clip Ass'y
33. Spring
34. .375-16 UNC Hex Bolt x 1.25 Lg.
35. .375 Std. Washer
36. Switch #CS 31
37. Switch #CS 32
38. 6-32 UNC Rd. Hd.
39. 6-32 UNC Hex Unit

WATTS BAR NUCLEAR PLANT
FINAL SAFETY
ANALYSIS REPORT

DETAILS OF LOWER INLET DOOR SHOWING HINGE, PROPORTIONING MECHANISM LIMIT SWITCHES AND SEALS

Figure 6.7-18

Figure 6.7-18 Details of Lower Inlet Door Showing Hinge, Proportioning Mechanism Limit Switches and Seals

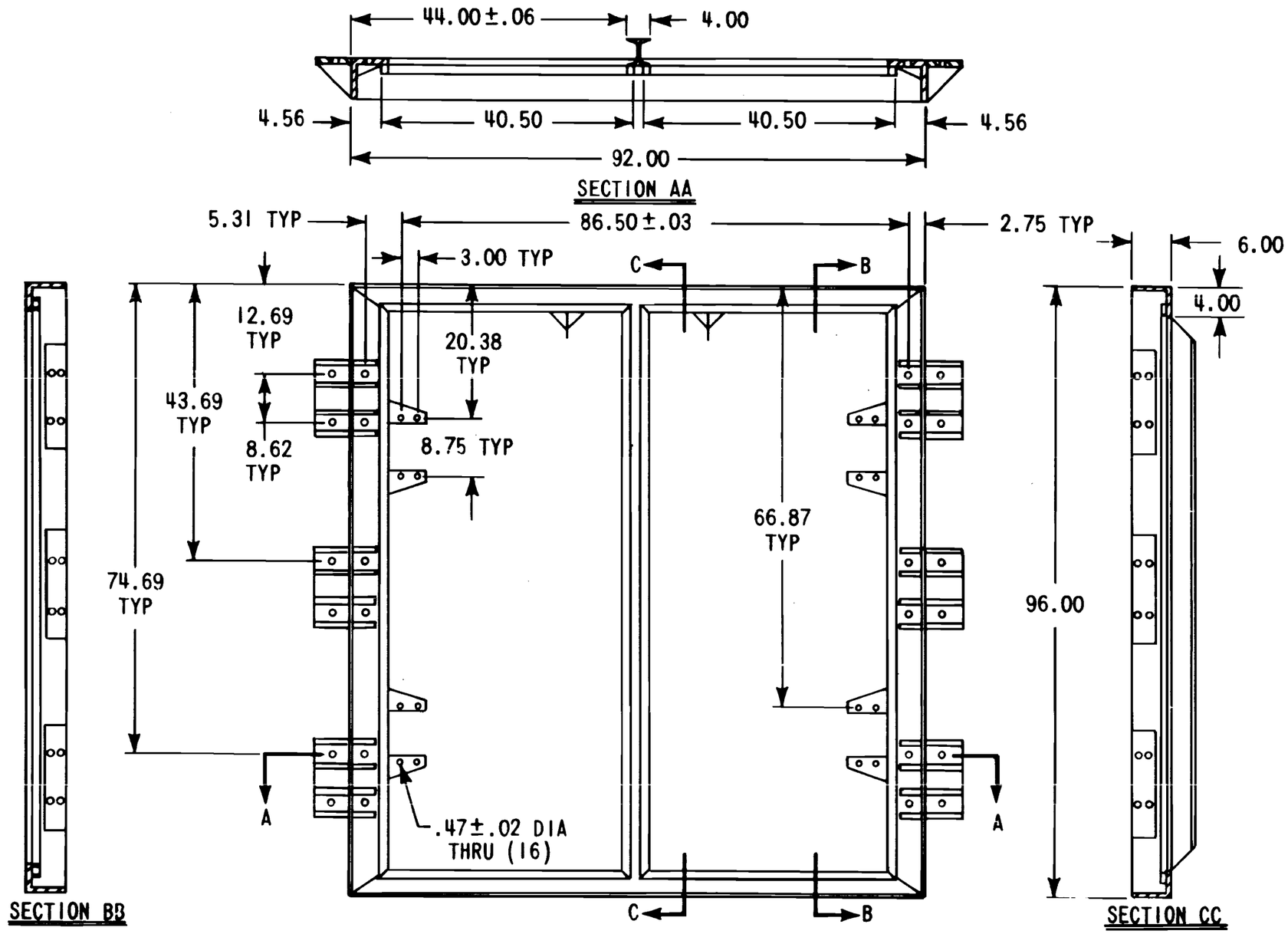

WATTS BAR NUCLEAR PLANT
FINAL SAFETY
ANALYSIS REPORT

INLET DOOR FRAME ASSEMBLY

Figure 6.7-19

Figure 6.7-19 Inlet Door Frame Assembly

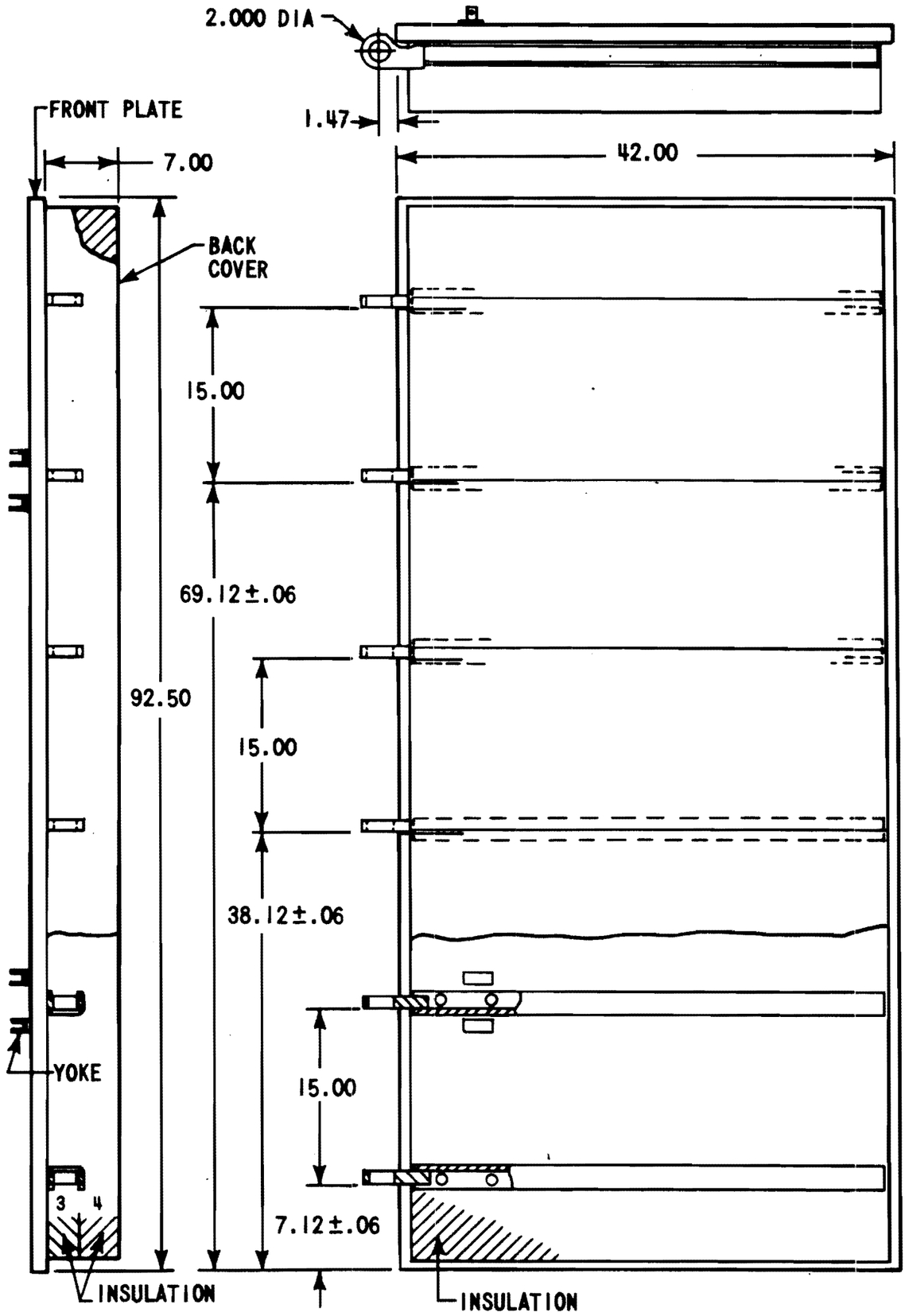

INLET DOOR PANEL ASSEMBLY

Figure 6.7-20

Figure 6.7-20 Inlet Door Panel Assembly

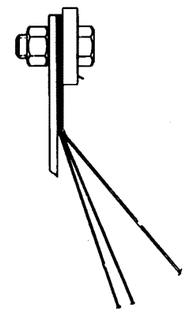

DETAIL - A
SCALE - 1:1

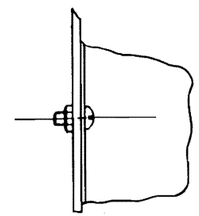

DETAIL - B
SCALE - 1:1

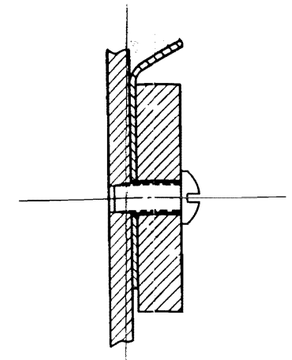

DETAIL - C
SCALE - 3:1

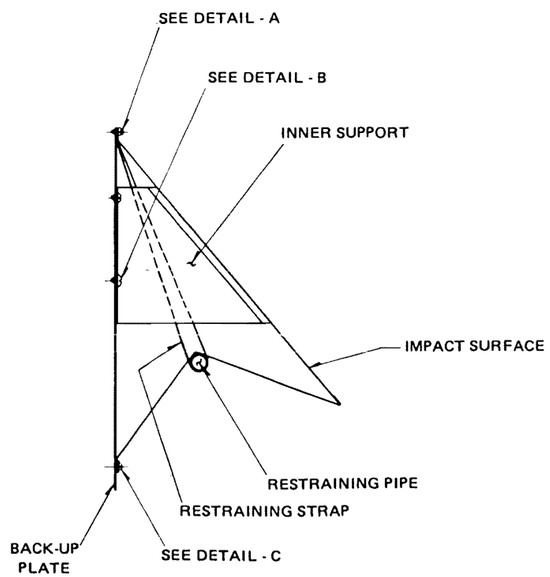

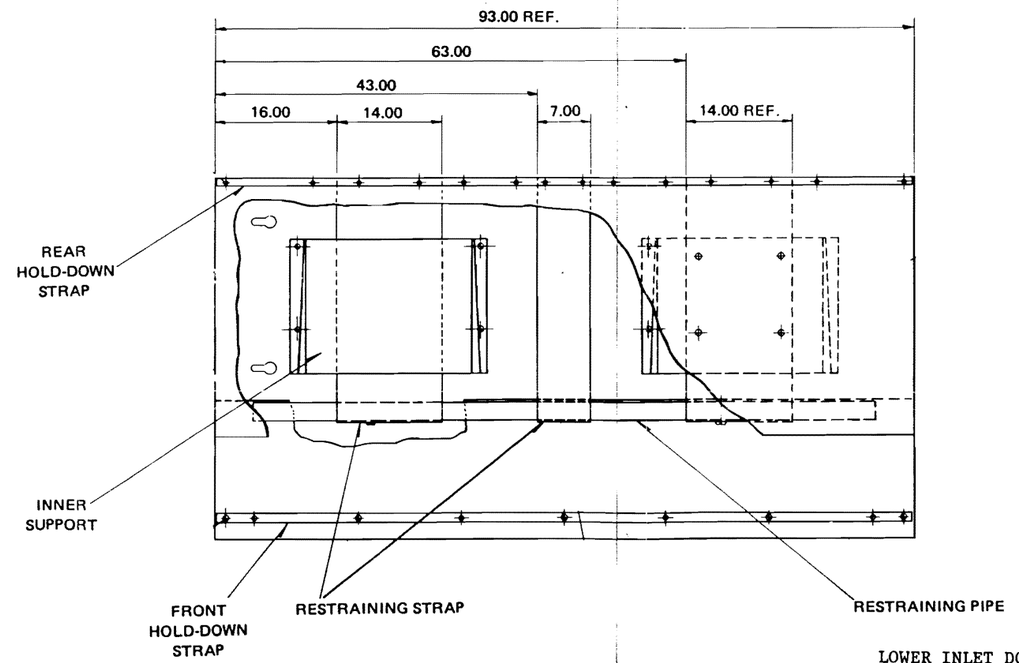

LOWER INLET DOOR SHOCK ABSORBER ASSEMBLY

Figure 6.7-21

Figure 6.7-21 Lower Inlet Door Shock Absorber Assembly

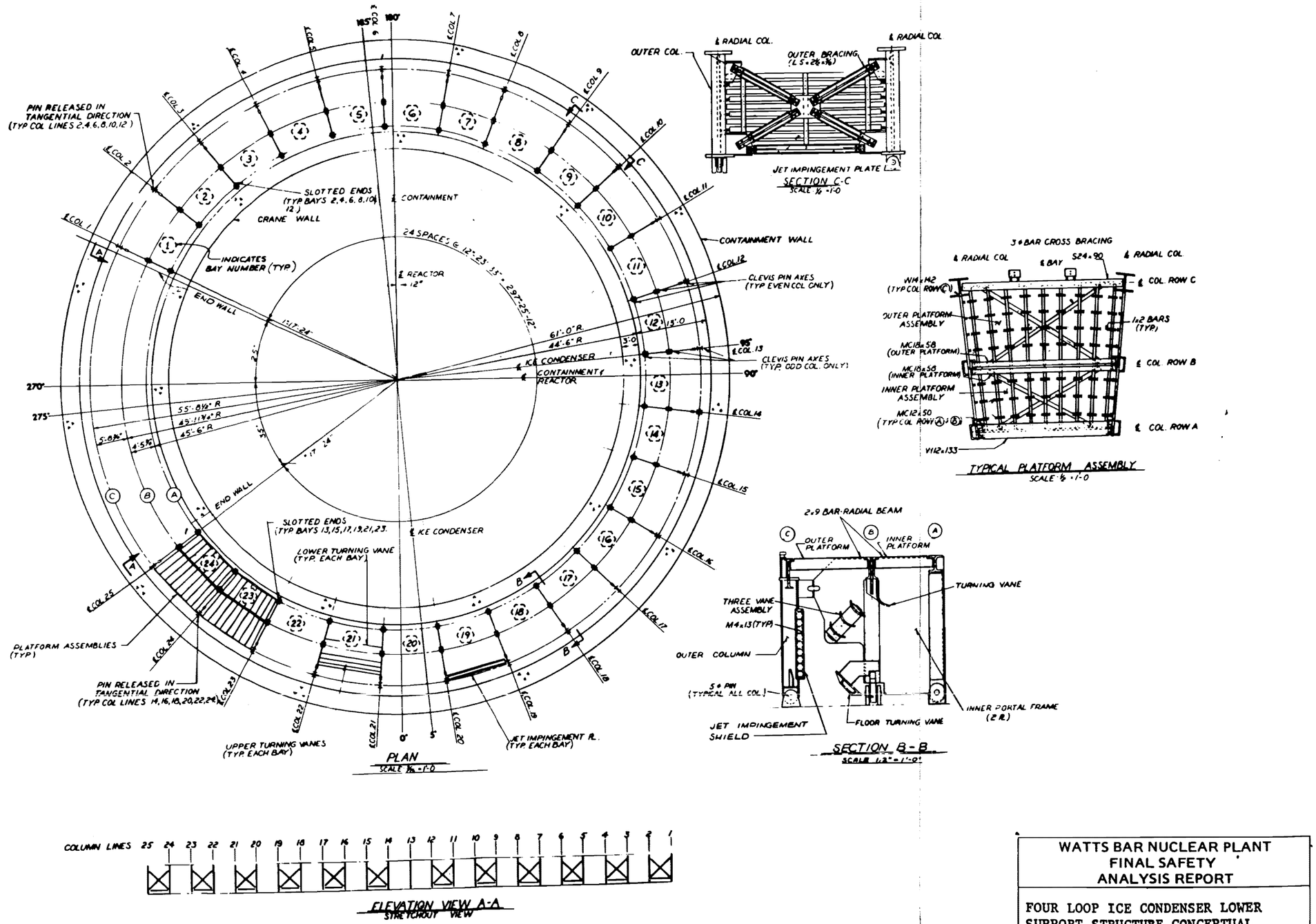

WATTS BAR NUCLEAR PLANT
FINAL SAFETY
ANALYSIS REPORT

FOUR LOOP ICE CONDENSER LOWER SUPPORT STRUCTURE CONCEPTUAL PLAN AND SECTIONS

Figure 6.7-22

Figure 6.7-22 Four Loop Ice Condenser Lower Support Structure Conceptual Plan and Sections

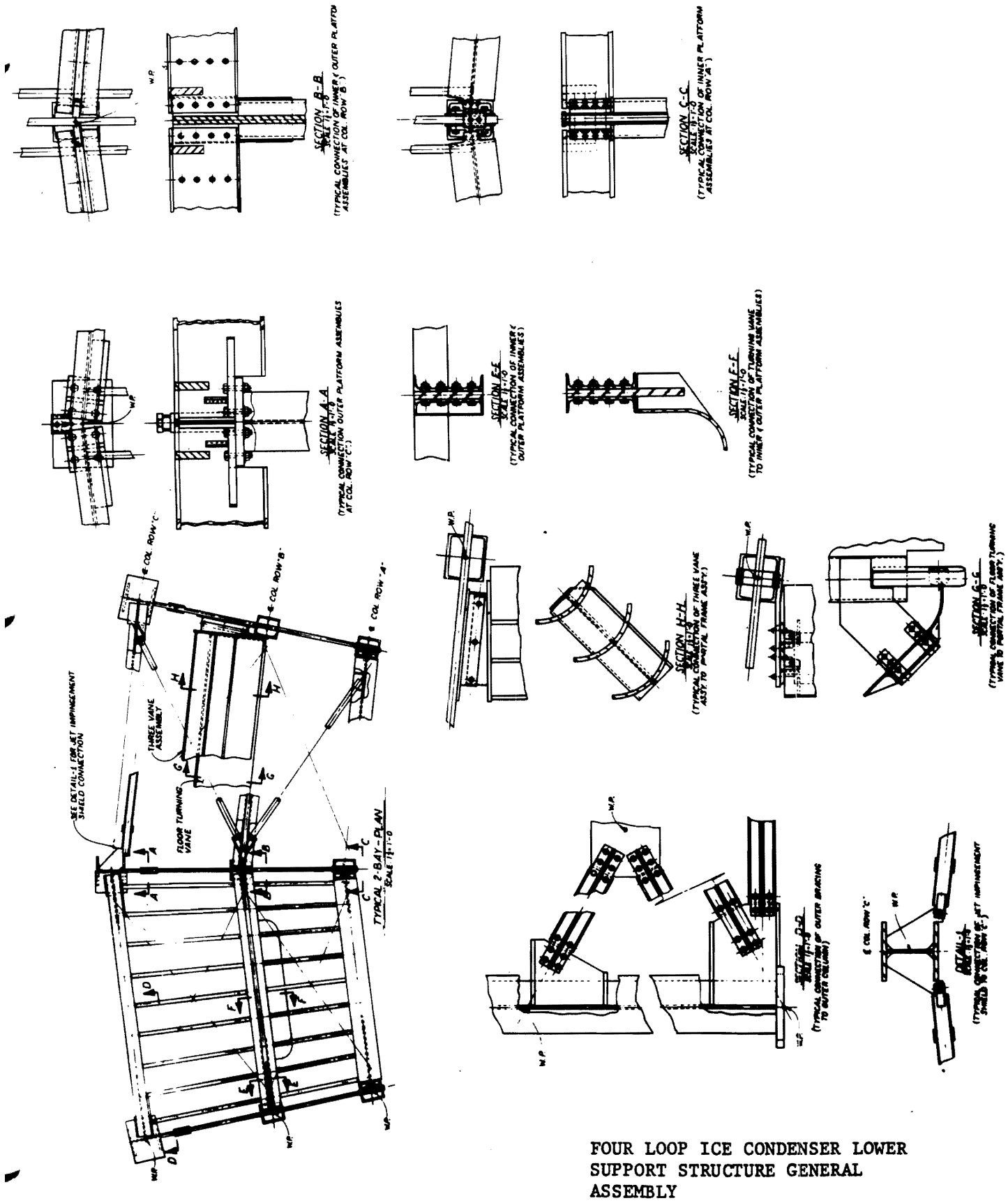

Figure 6.7-23 Four Loop Ice Condenser Lower Support Structure General Assembly

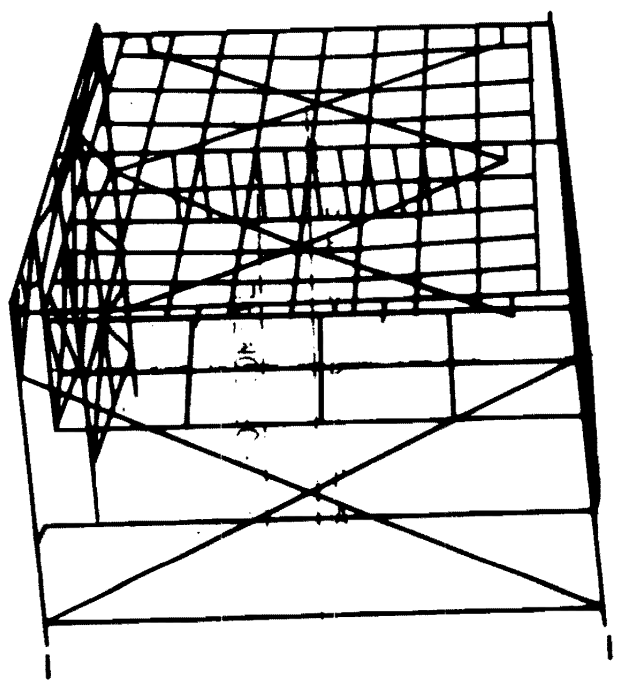

WATTS BAR NUCLEAR PLANT
FINAL SAFETY
ANALYSIS REPORT

ANTS MODEL ASSEMBLY

Figure 6.7-24

Figure 6.7-24 ANTS Model Assembly

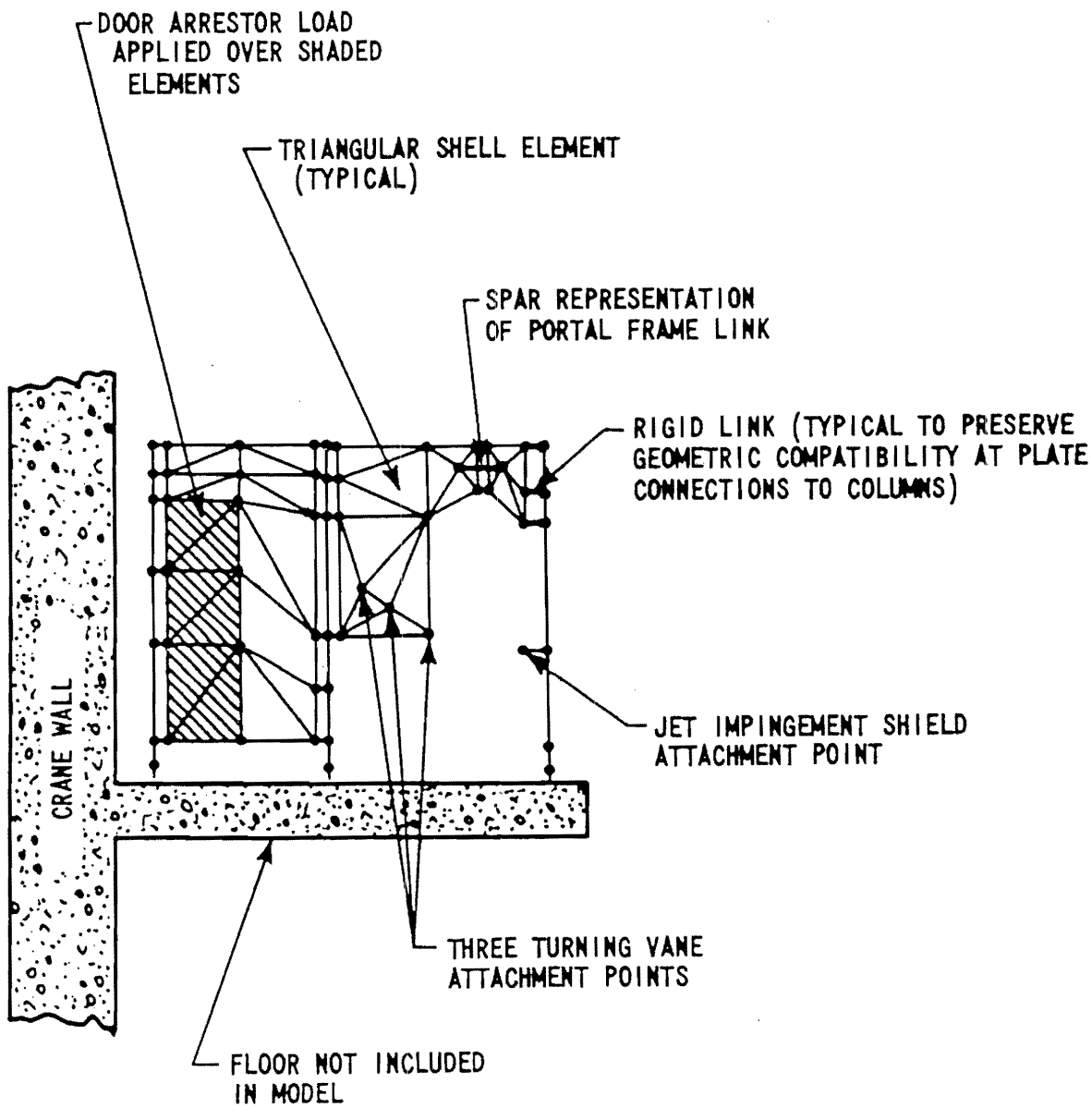

WATTS BAR NUCLEAR PLANT FINAL SAFETY ANALYSIS REPORT
FINITE ELEMENT MODEL OF PORTAL FRAME Figure 6.7-25

AMENDMENT 85

Figure 6.7-25 Finite Element Model of Ported Frame

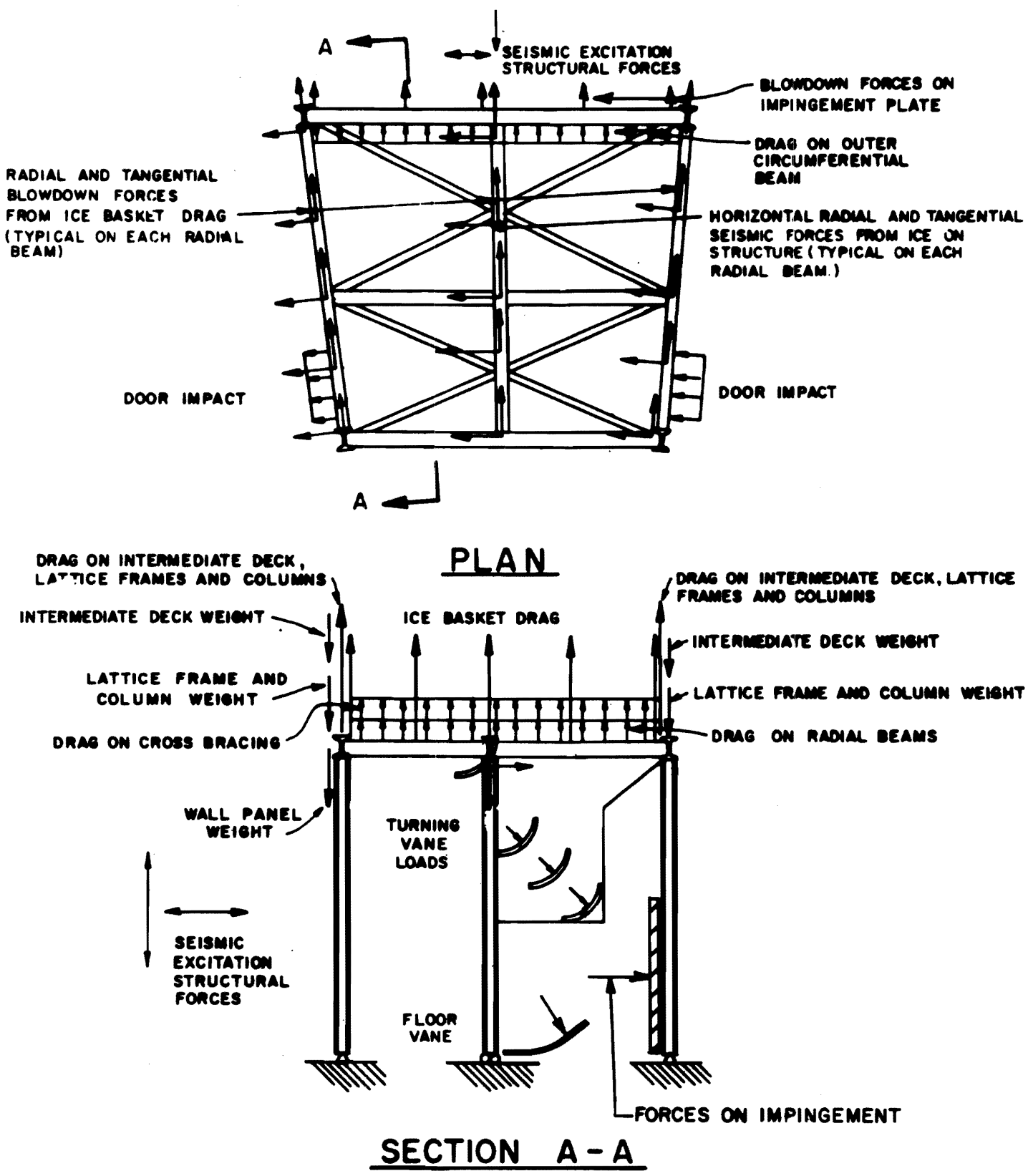

WATTS BAR NUCLEAR PLANT FINAL SAFETY ANALYSIS REPORT
SCHEMATIC DIAGRAM OF FORCES APPLIED TO THREE PIER LOWER SUPPORT STRUCTURE Figure 6.7-26

Figure 6.7-26 Schematic Diagram of Forces Applied to Three Pier Lower Support Structure

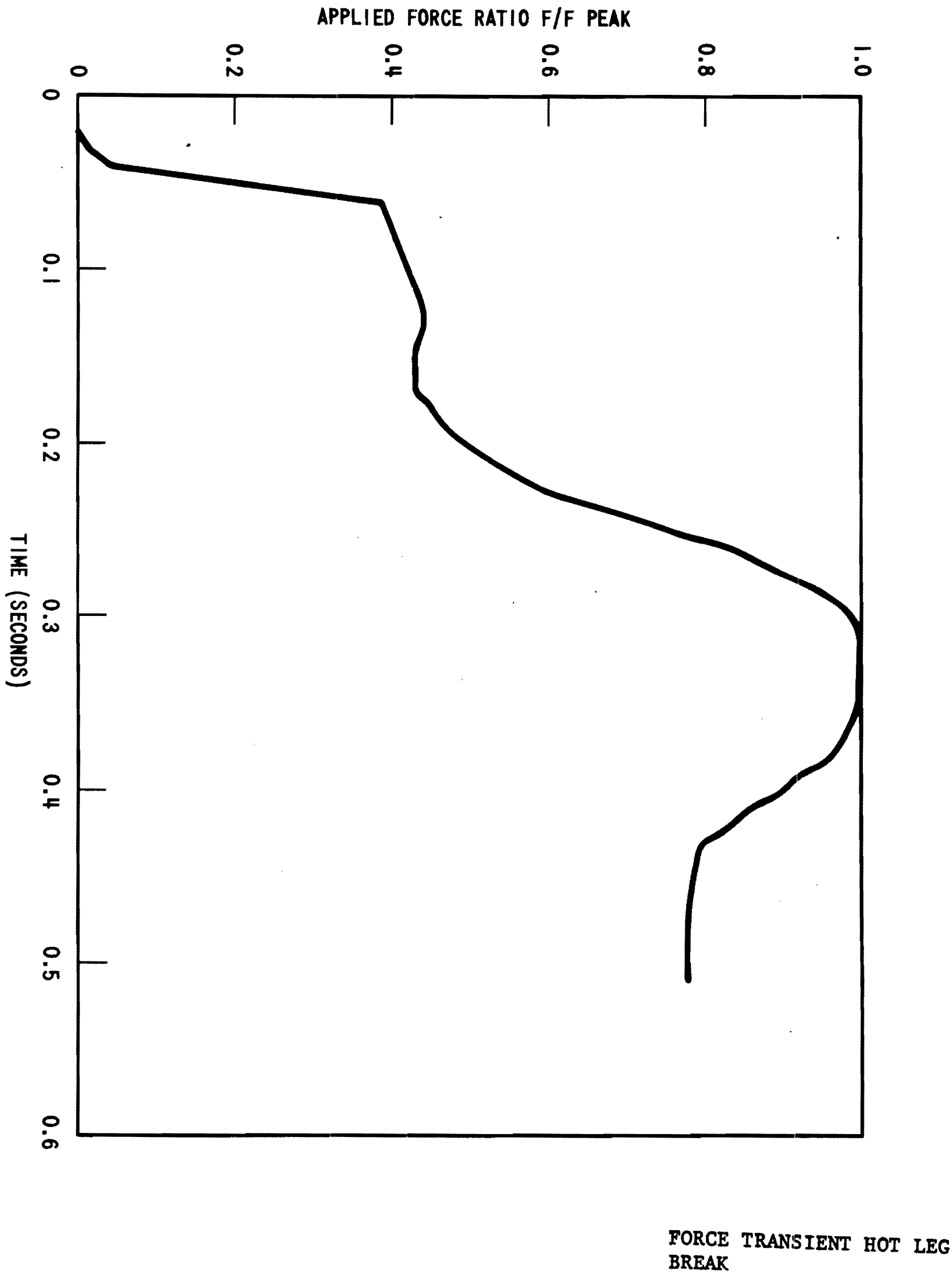

Figure 6.7-27 Force Transient Hot Leg Break

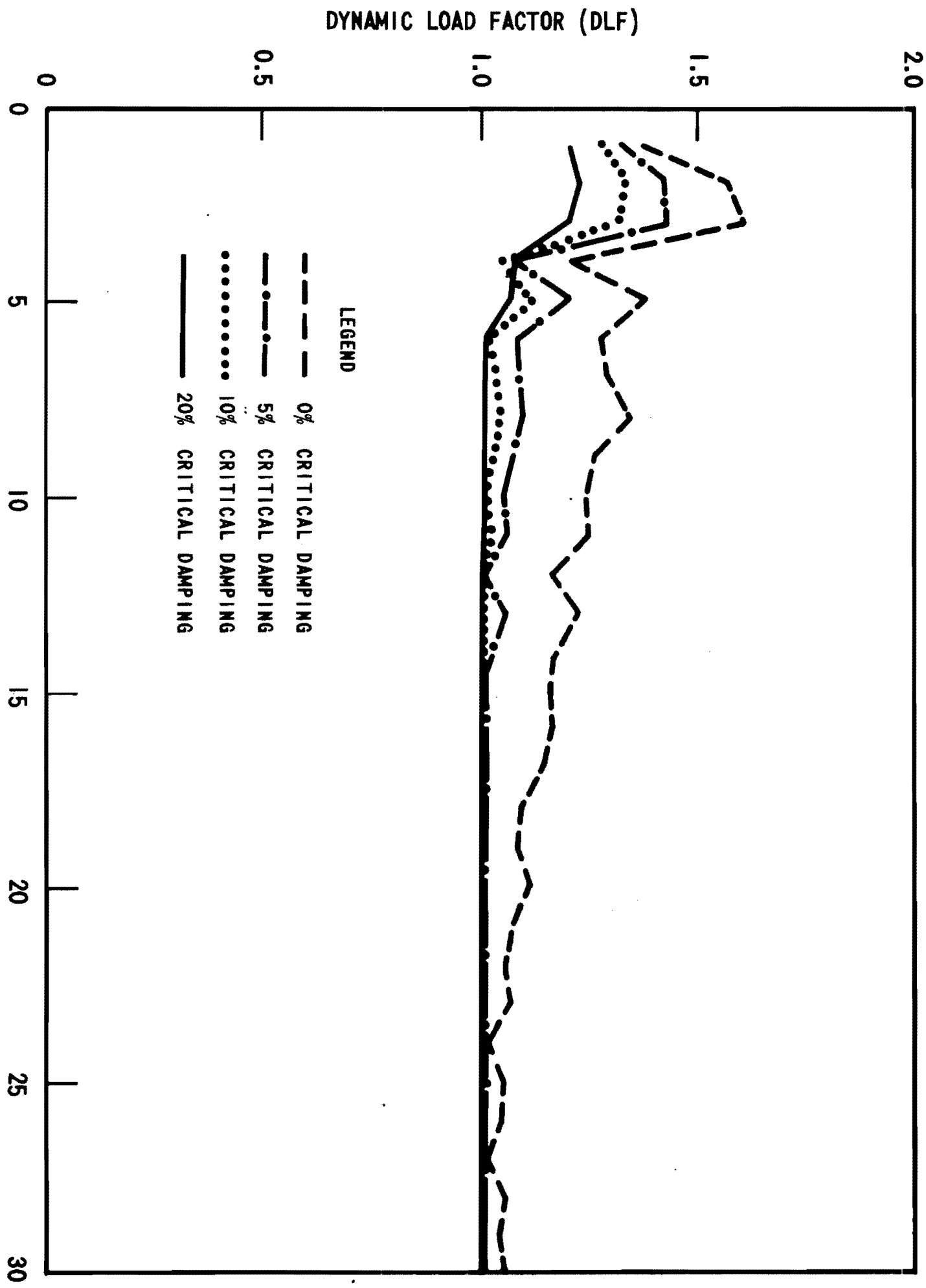

WATTS BAR NUCLEAR PLANT
FINAL SAFETY
ANALYSIS REPORT

DLF SPECTRA HOT LEG BREAK
FORCE TRANSIENT

Figure 6.7-28

Figure 6.7-28 DLF Spectra Hot Leg Break Force Transient

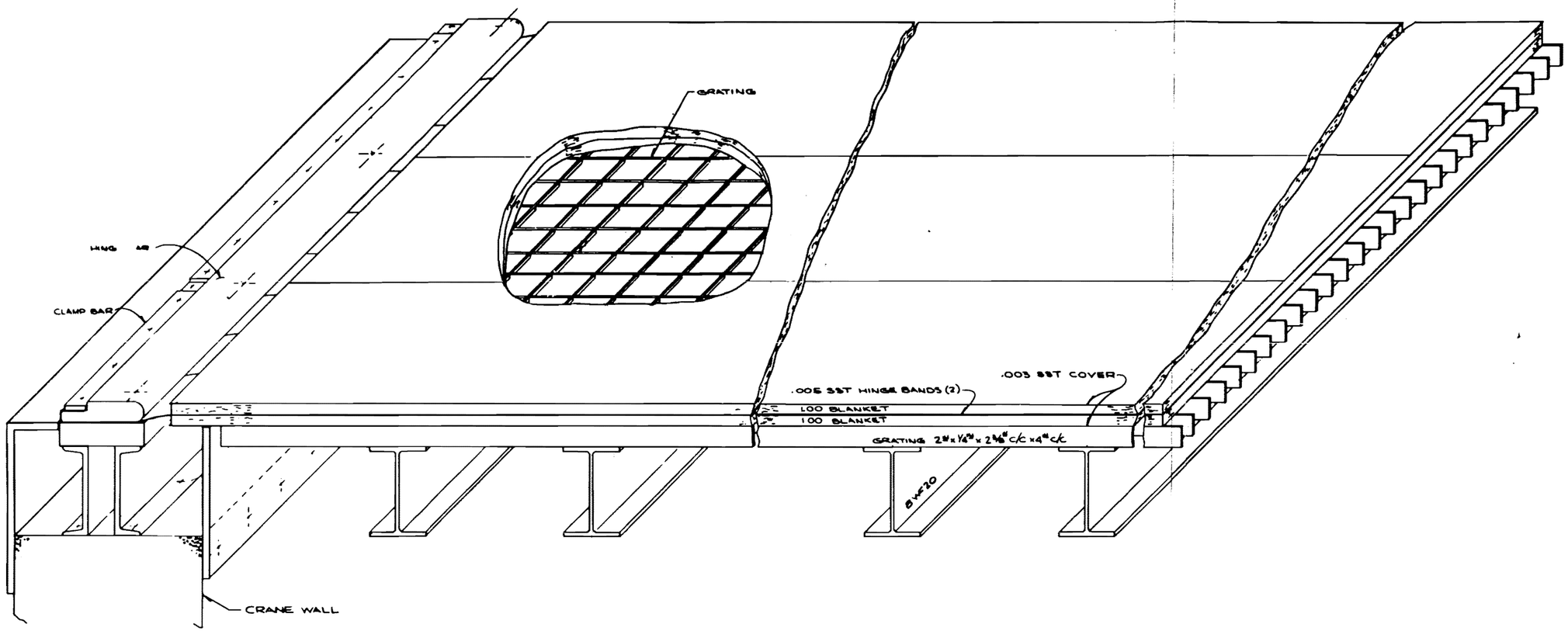

WATTS BAR NUCLEAR PLANT
FINAL SAFETY
ANALYSIS REPORT

TOP DECK TEST ASSEMBLY

Figure 6.7-29

Figure 6.7-29 Top Deck Test Assembly

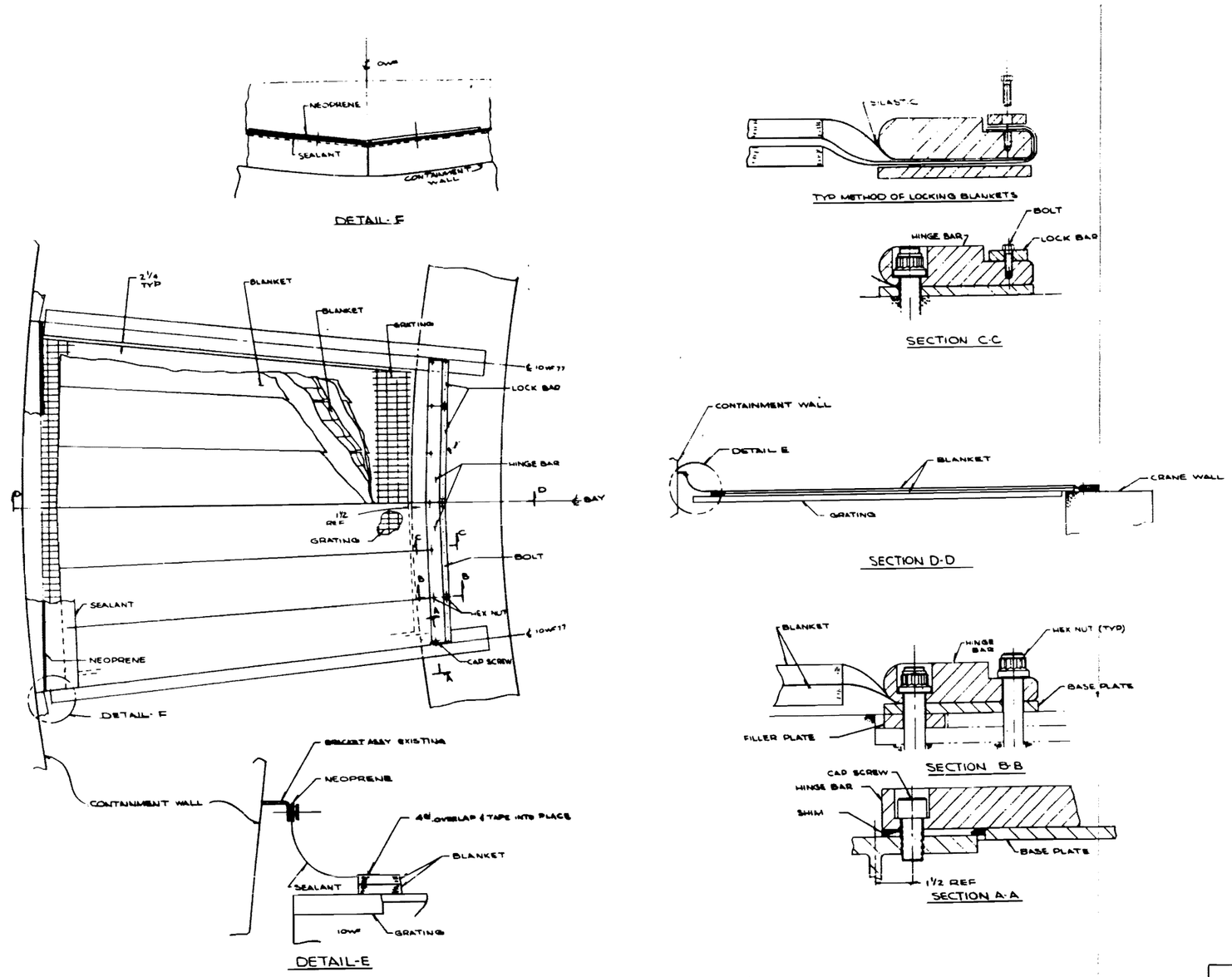

WATTS BAR NUCLEAR PLANT
FINAL SAFETY
ANALYSIS REPORT

DETAILS OF TOP DECK DOOR ASSEMBLY

Figure 6.7-30

Figure 6.7-30 Details of Top Deck Door Assembly

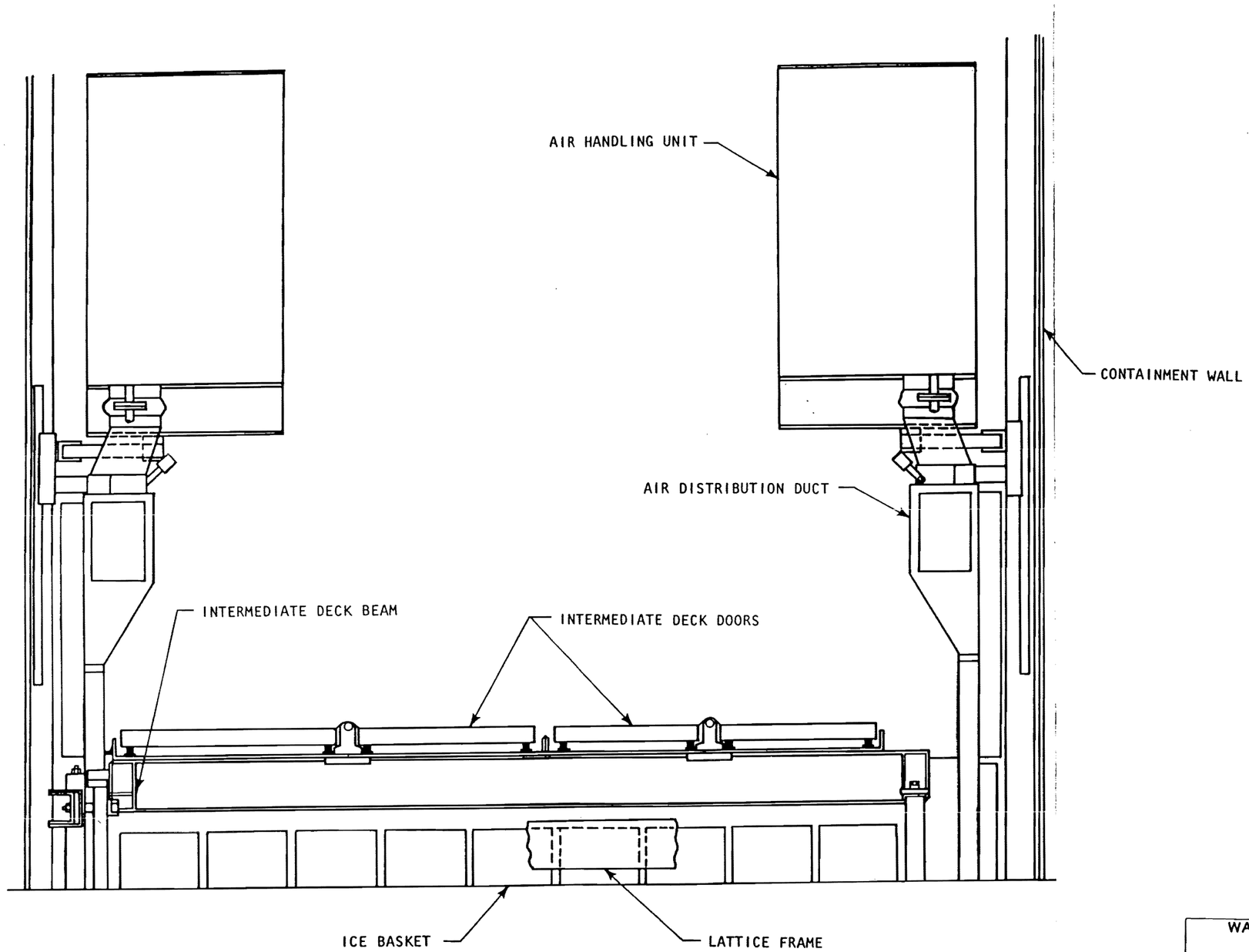

WATTS BAR NUCLEAR PLANT
FINAL SAFETY
ANALYSIS REPORT

INTERMEDIATE DECK DOOR
ASSEMBLY

Figure 6.7-31

Figure 6.7-31 Intermediate Deck Door Assembly

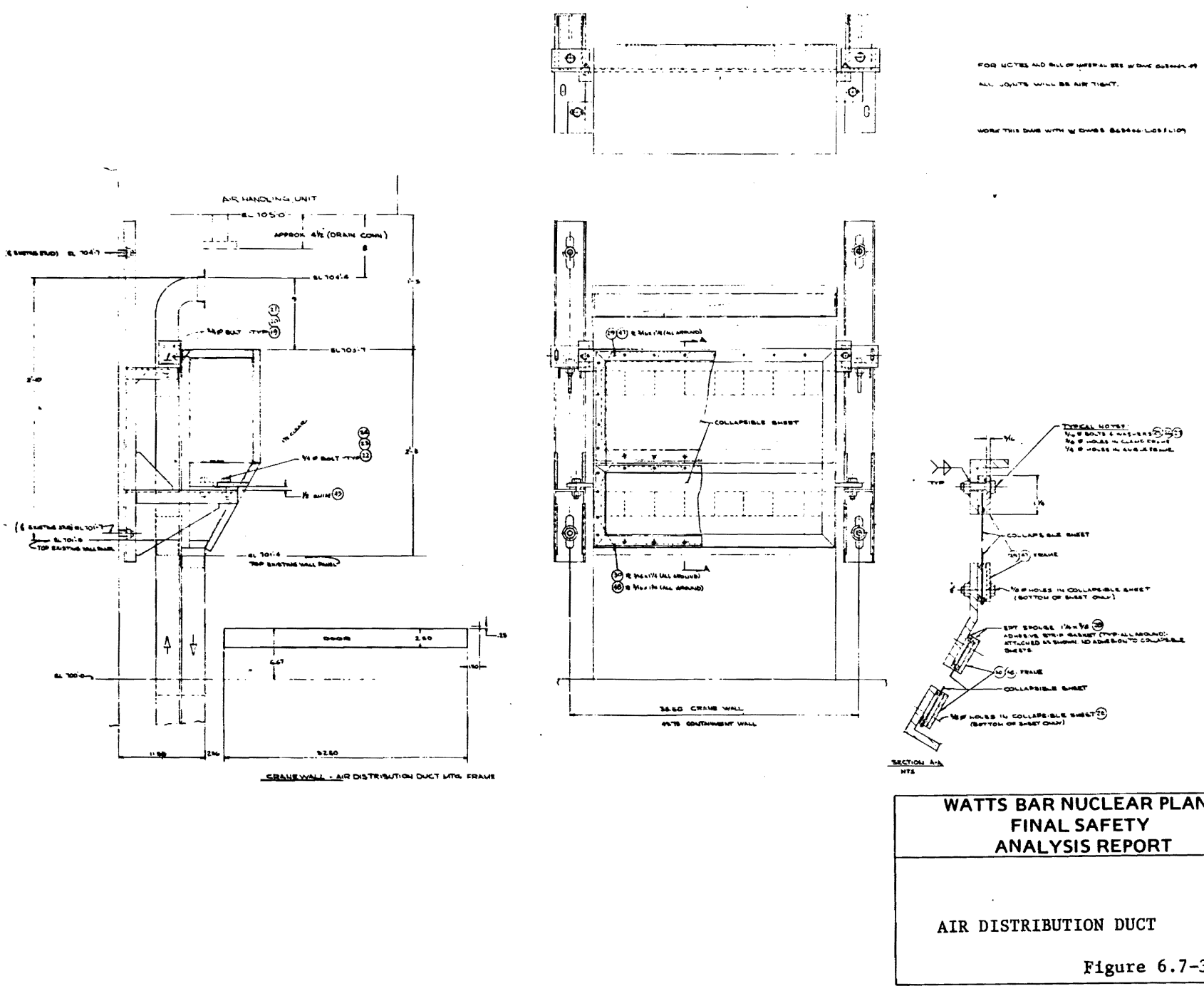

Figure 6.7-32 Air Distribution Duct

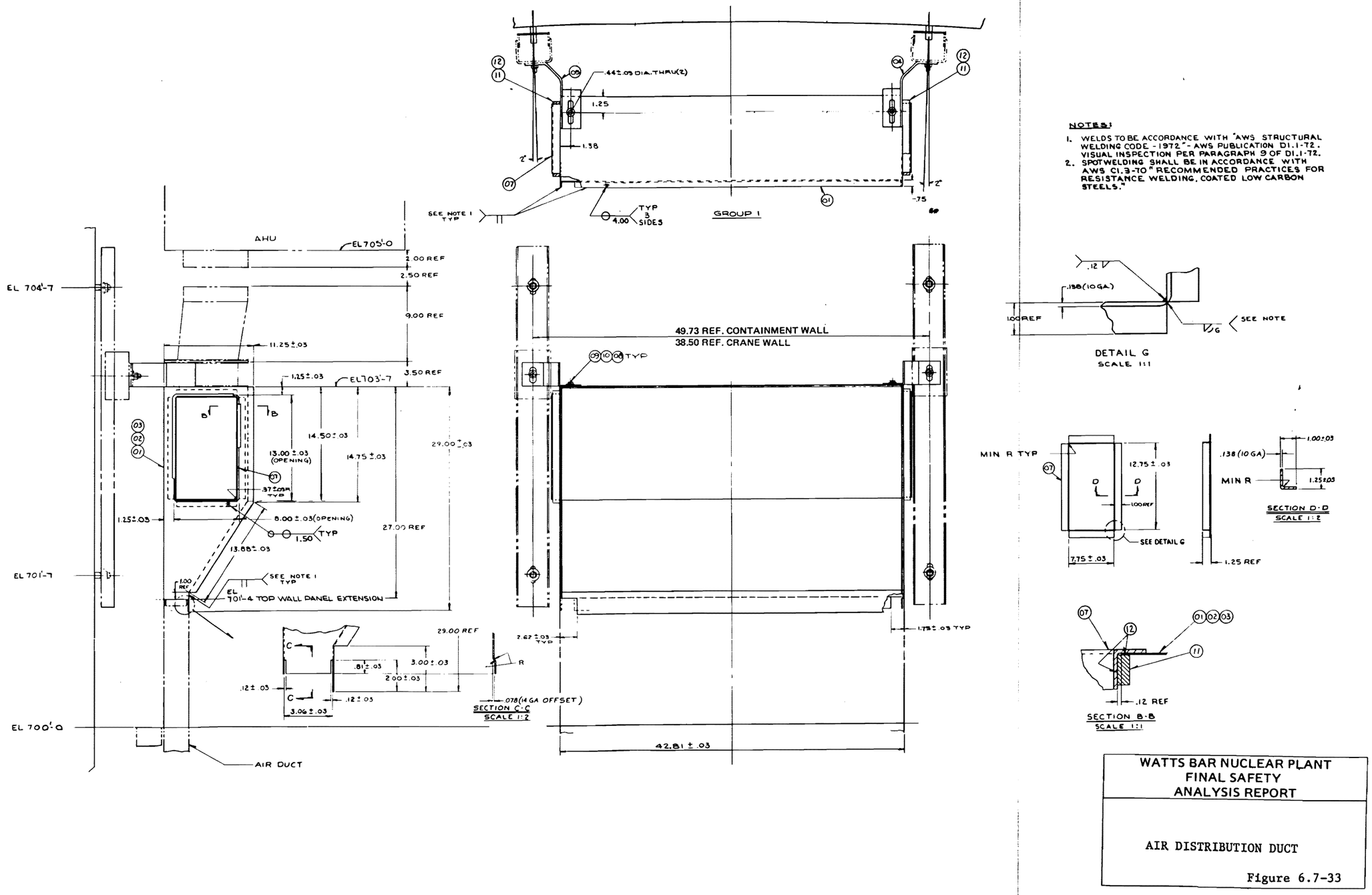

Figure 6.7-33 Air Distribution Duct

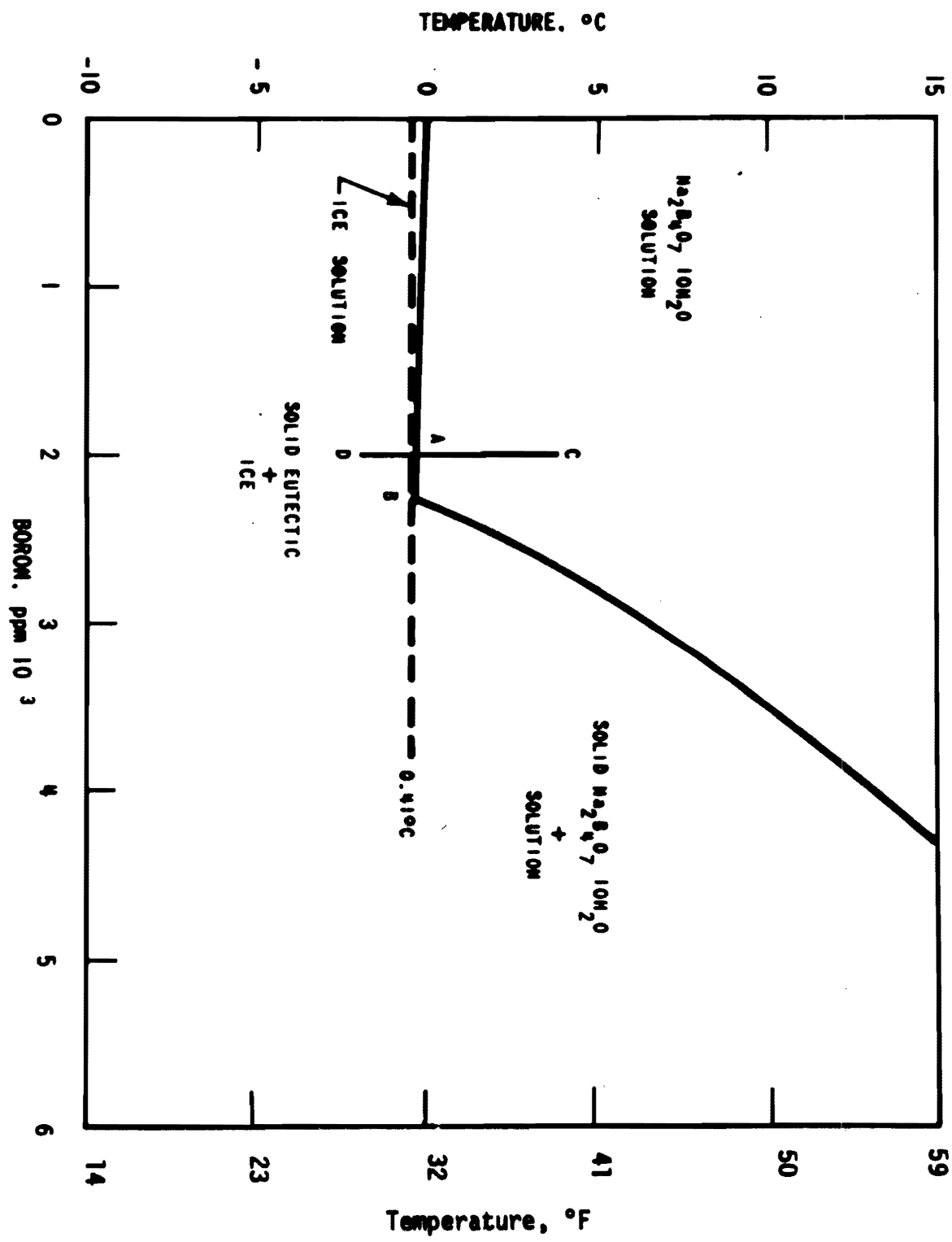

WATTS BAR NUCLEAR PLANT FINAL SAFETY ANALYSIS REPORT
PHASE DIAGRAM FOR NA_2 B_4 0_7 .10 H/WATER SYSTEM AT ONE ATMOSPHERE Figure 6.7-34

Figure 6.7-34 Phase Diagram for Na_2 B_4 0_7.10 H_2O/Water System at One Atmosphere

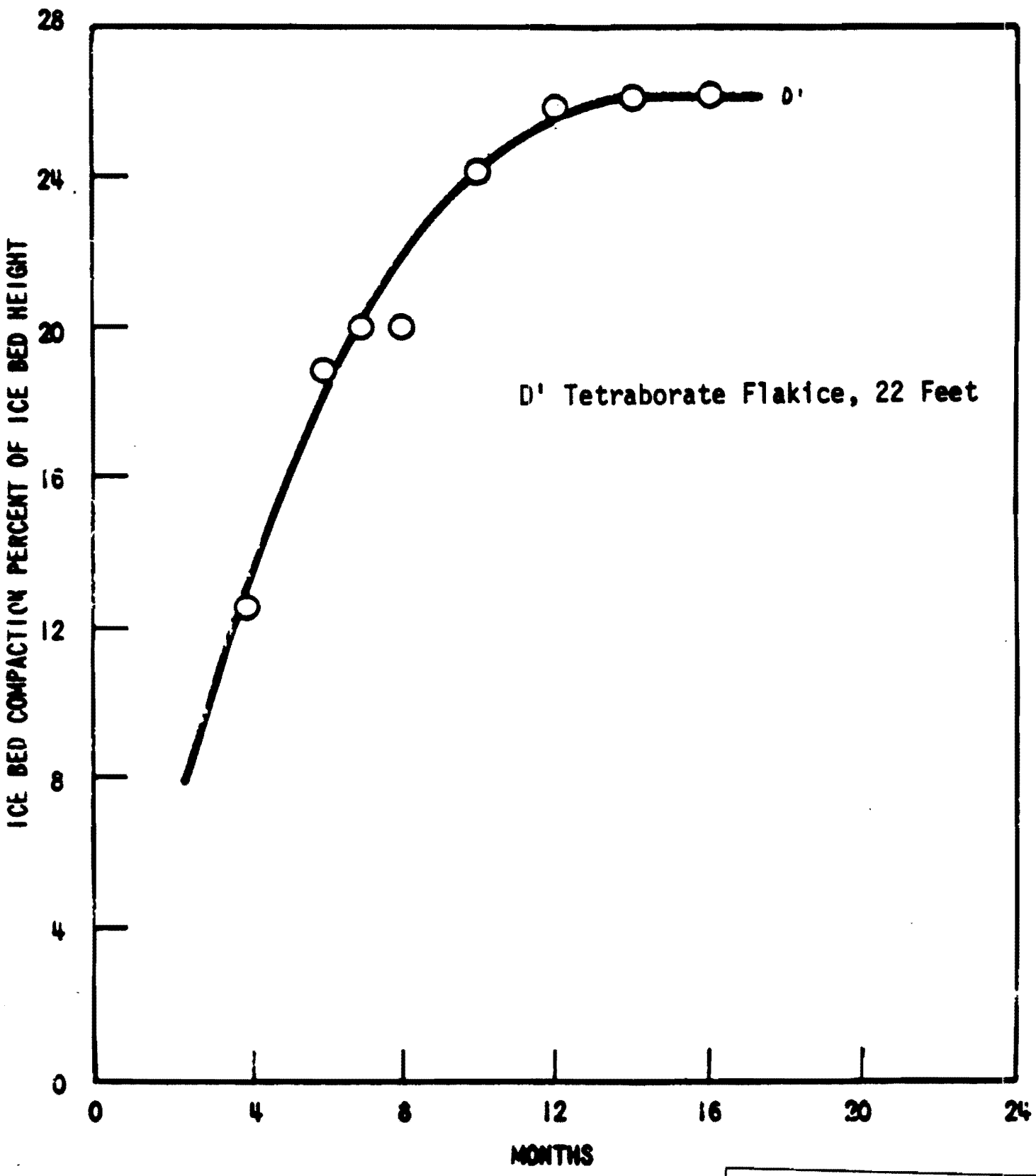

WATTS BAR NUCLEAR PLANT
FINAL SAFETY
ANALYSIS REPORT

ICE BED COMPACTION VERSUS TIME

Figure 6.7-35

Figure 6.7-35 Ice Bed Compaction Versus Time

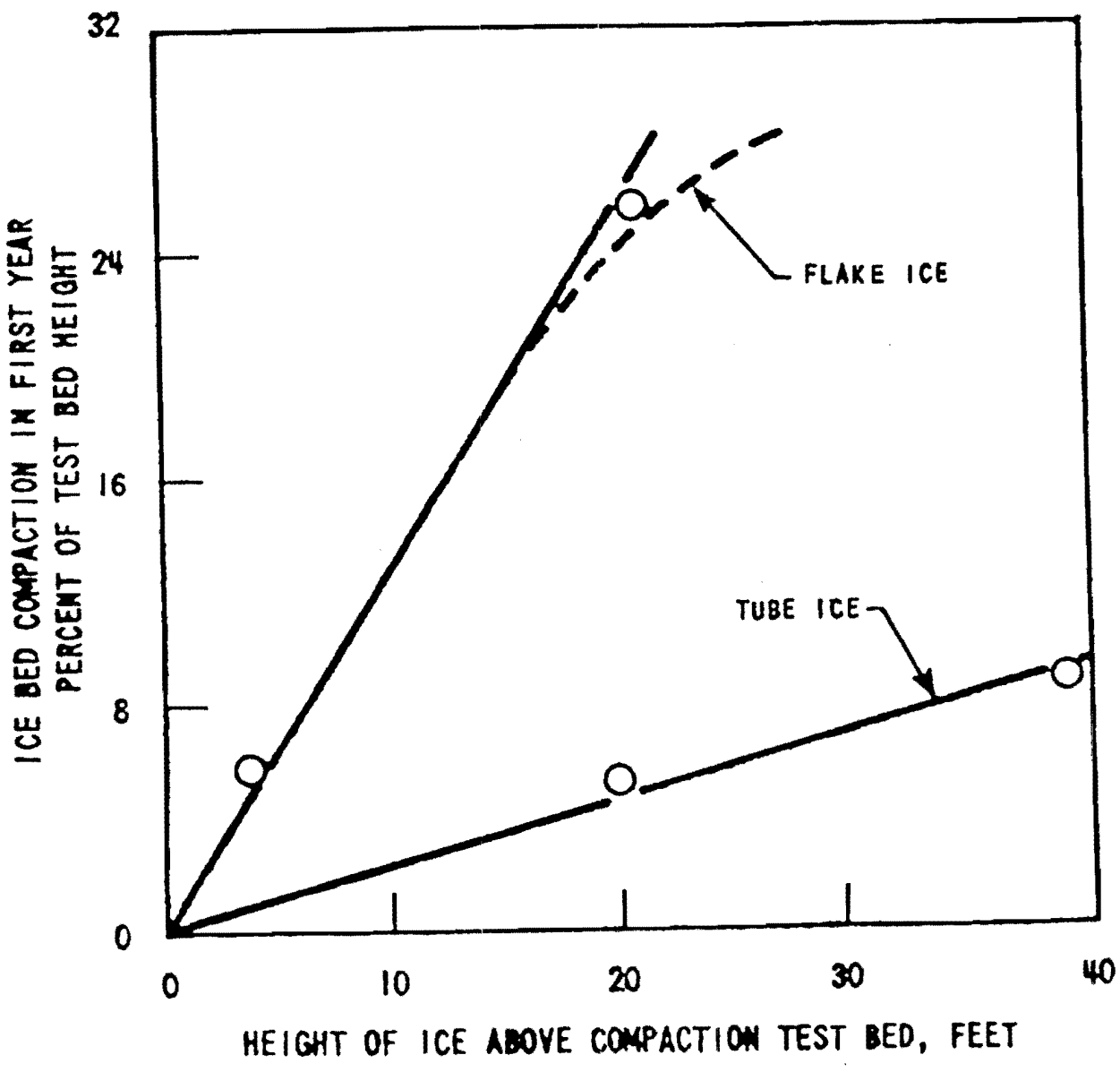

WATTS BAR NUCLEAR PLANT
FINAL SAFETY
ANALYSIS REPORT

TEST ICE BED COMPACTION VERSUS
ICE BED HEIGHT

Figure 6.7-36

AMENDMENT 85

Figure 6.7-36 Test Ice Bed Compaction Versus Ice Bed Height

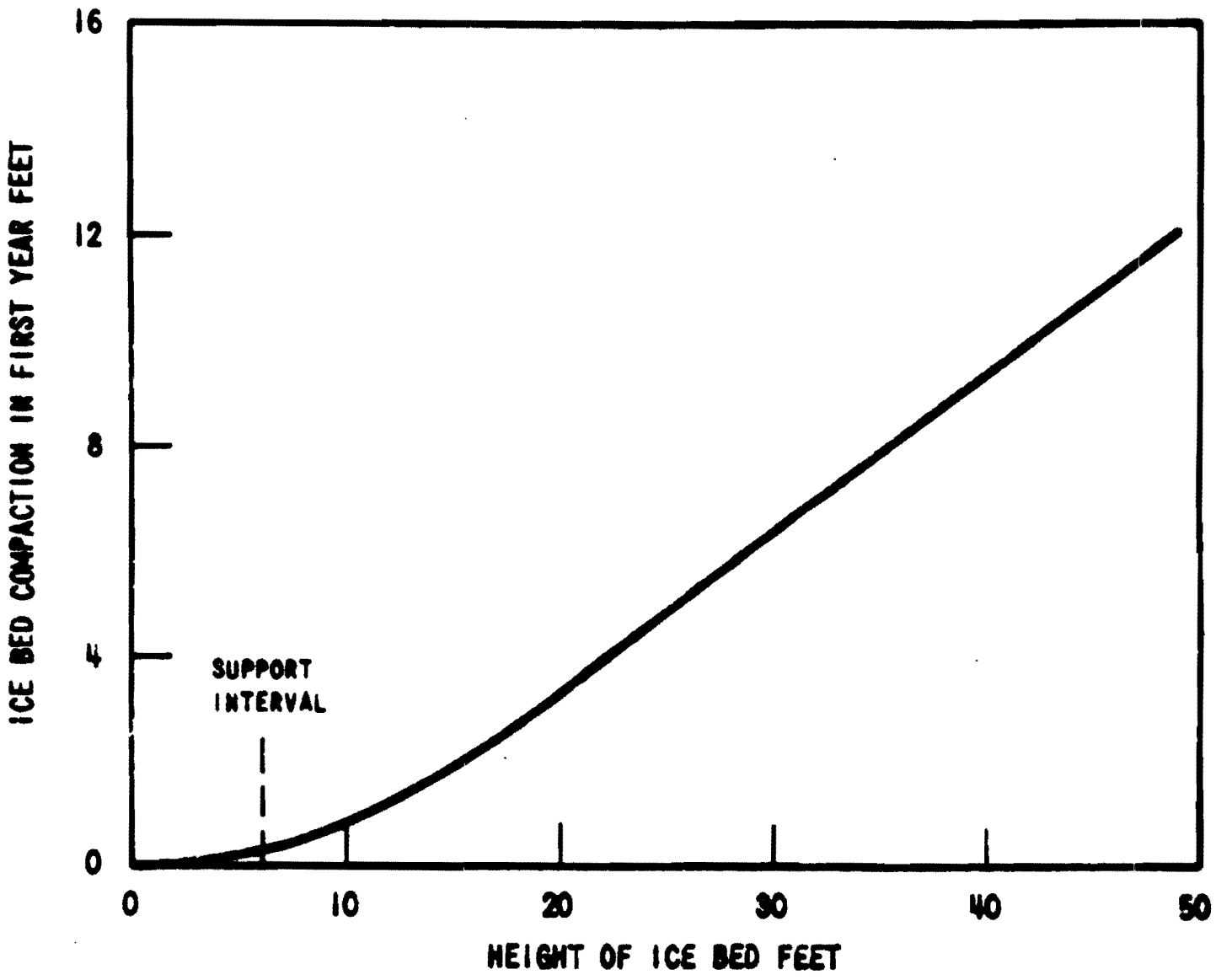

WATTS BAR NUCLEAR PLANT
FINAL SAFETY
ANALYSIS REPORT

TOTAL ICE COMPACTION VERSUS
ICE BED HEIGHT

Figure 6.7-37

Figure 6.7-37 Total Ice Compaction Versus Ice Bed Height

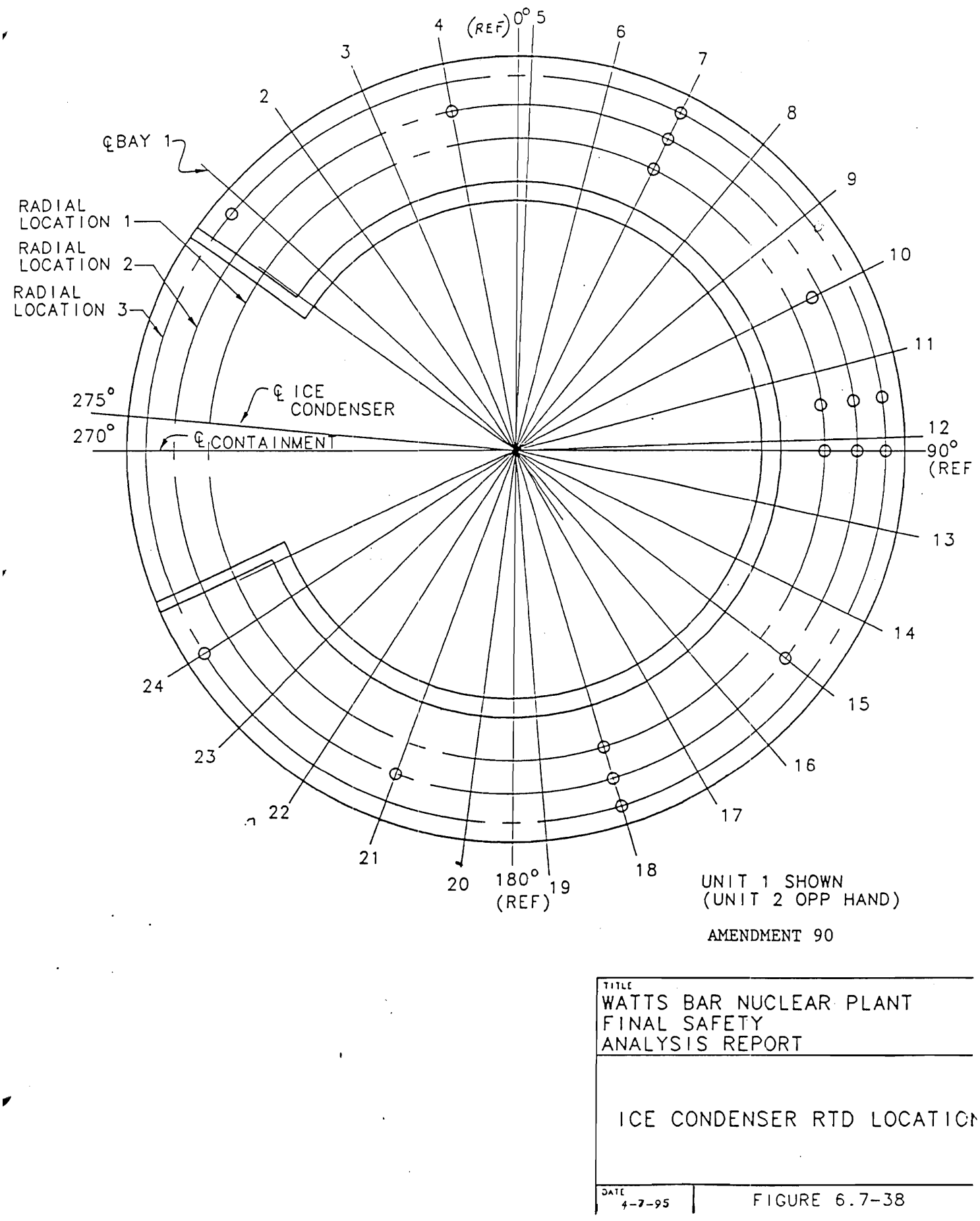

Figure 6.7-38 Ice Condenser RTD location

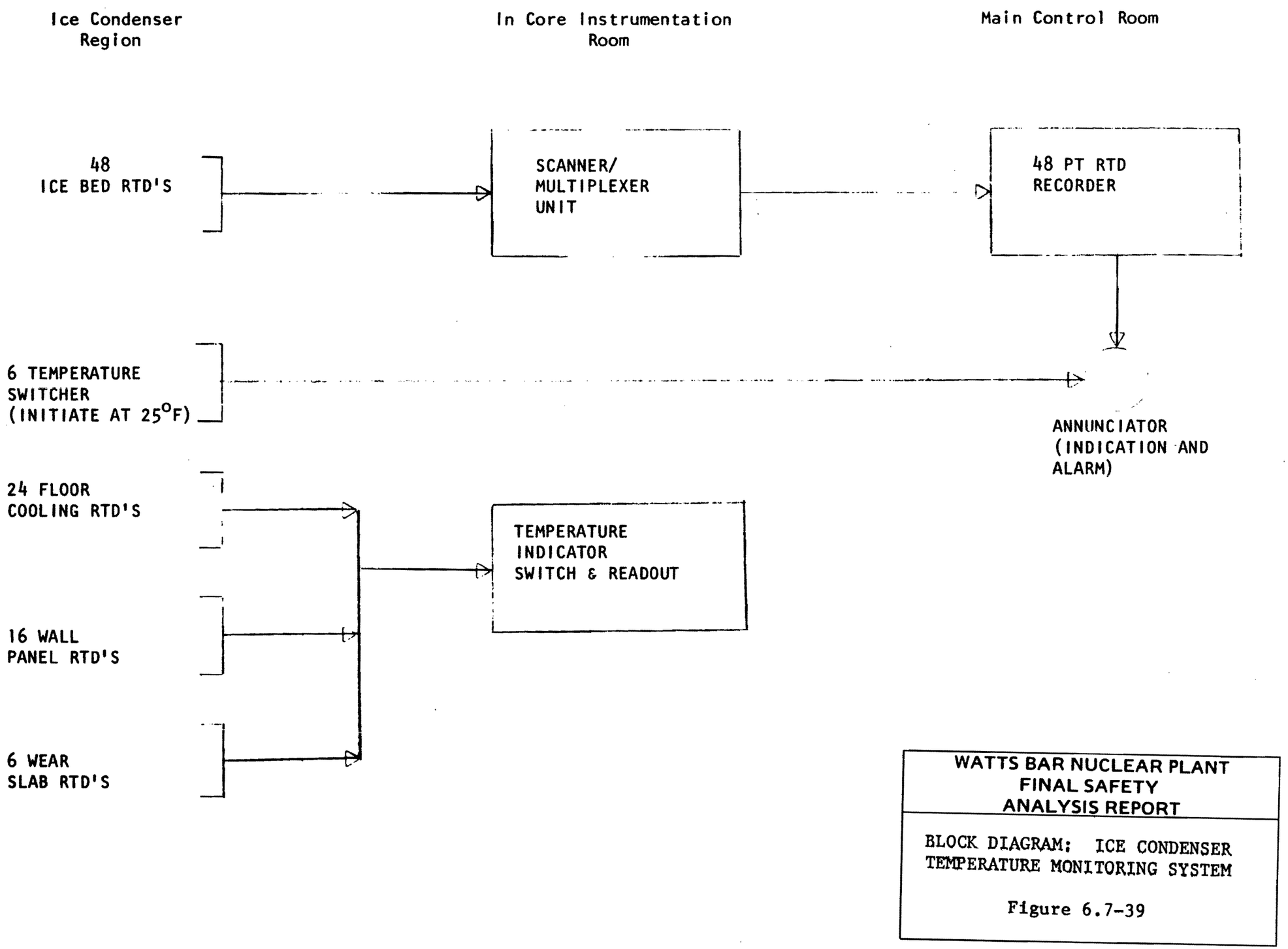

Figure 6.7-39 Block Diagram Ice Condenser Temperature Monitoring System

8608-3

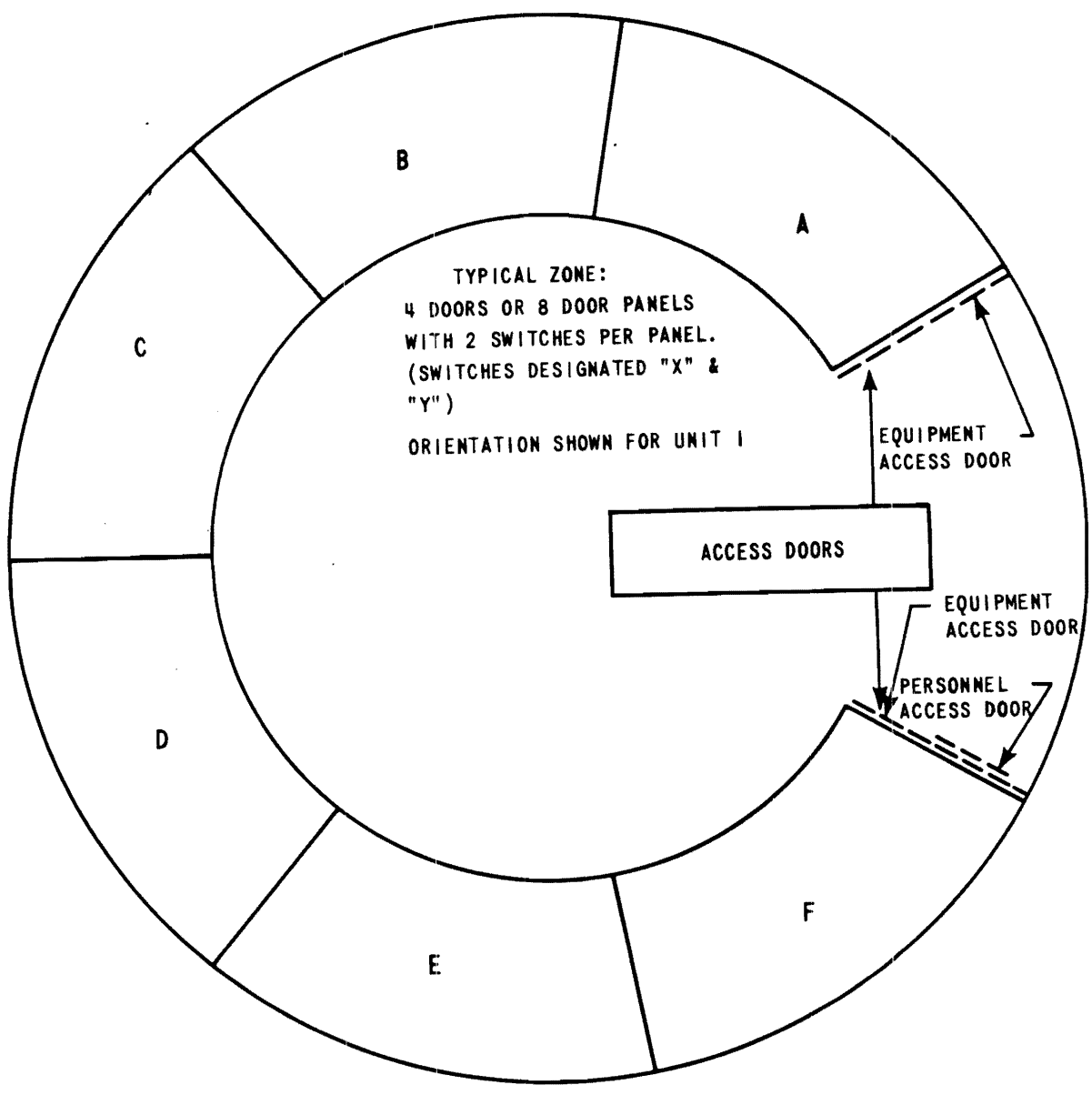

WATTS BAR NUCLEAR PLANT
FINAL SAFETY
ANALYSIS REPORT

DOOR MONITORING ZONES

Figure 6.7-40

Figure 6.7-40 Door Monitoring Zones

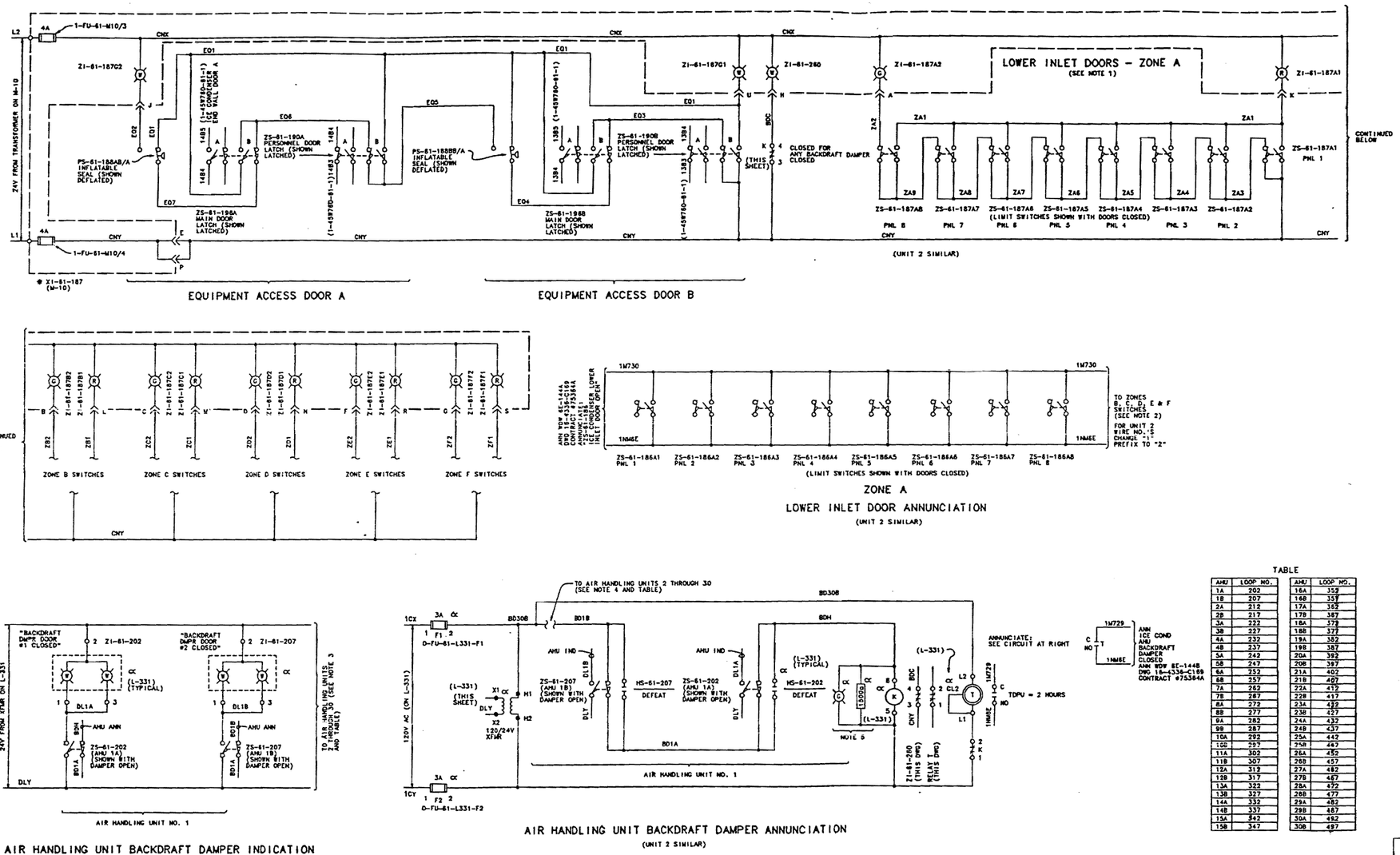

Amendment 89

WATTS BAR
FINAL SAFETY
ANALYSIS REPORT

POWERHOUSE
UNIT 1
WIRING DIAGRAMS
ICE CONDENSER SYSTEM
SCHEMATIC DIAGRAMS
TVA DWG NO. 1-45W600-61-2 R3
FIGURE 6.7-41

PROCADAM MAINTAINED DRAWING
THIS CONFIGURATION CONTROL DRAWING IS MAINTAINED BY THE WBN CAD UNIT AND IS NOW PART OF THE TVA PROCADAM DATABASE

Figure 6.7-41 Powerhouse Unit 1 Wiring Diagram Ice Condenser System Schematic Diagrams

Figure 6.7-42 Deleted by Amendment 89

Figure 6.7-43 Deleted by Amendment 89

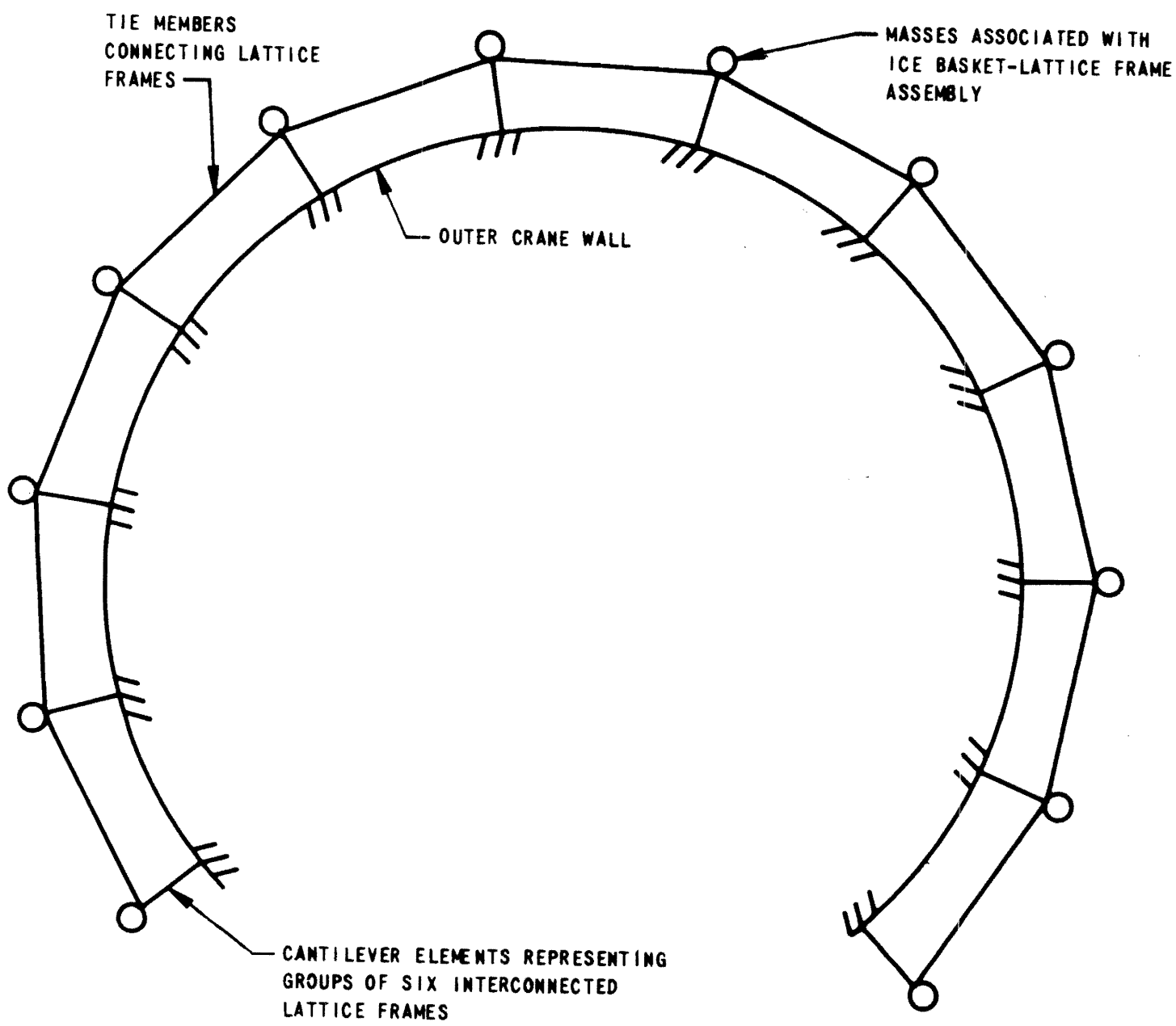

WATTS BAR NUCLEAR PLANT FINAL SAFETY ANALYSIS REPORT
MODEL OF HORIZONTAL LATTICE FRAME STRUCTURE Figure 6.7-44

Figure 6.7-44 Model of Horizontal Lattice Frame Structure

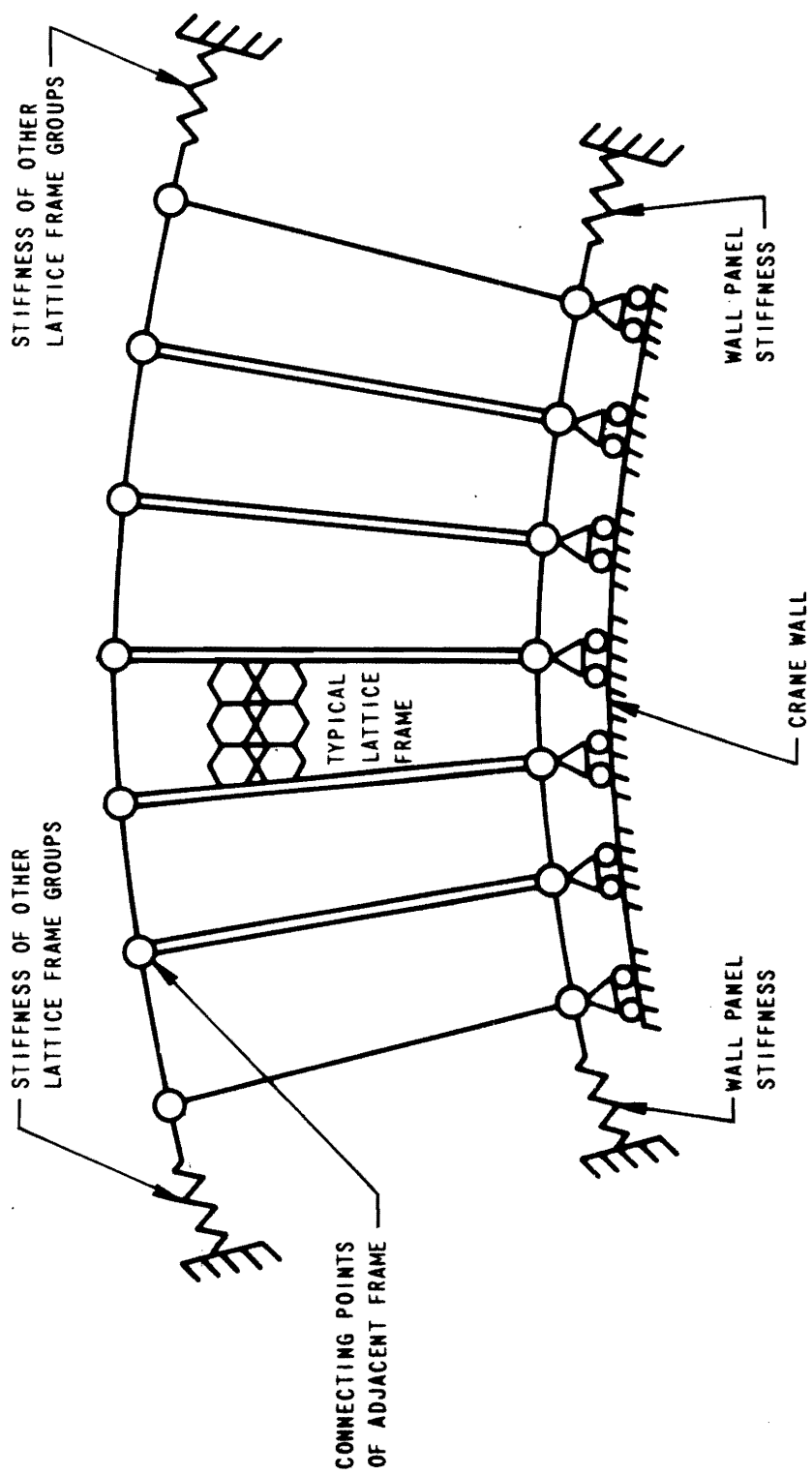

WATTS BAR NUCLEAR PLANT
FINAL SAFETY
ANALYSIS REPORT

GROUP OF SIX INTERCONNECTED LATTICE FRAMES

Figure 6.7-45

Figure 6.7-45 Group of Six Interconnected Lattice Frames

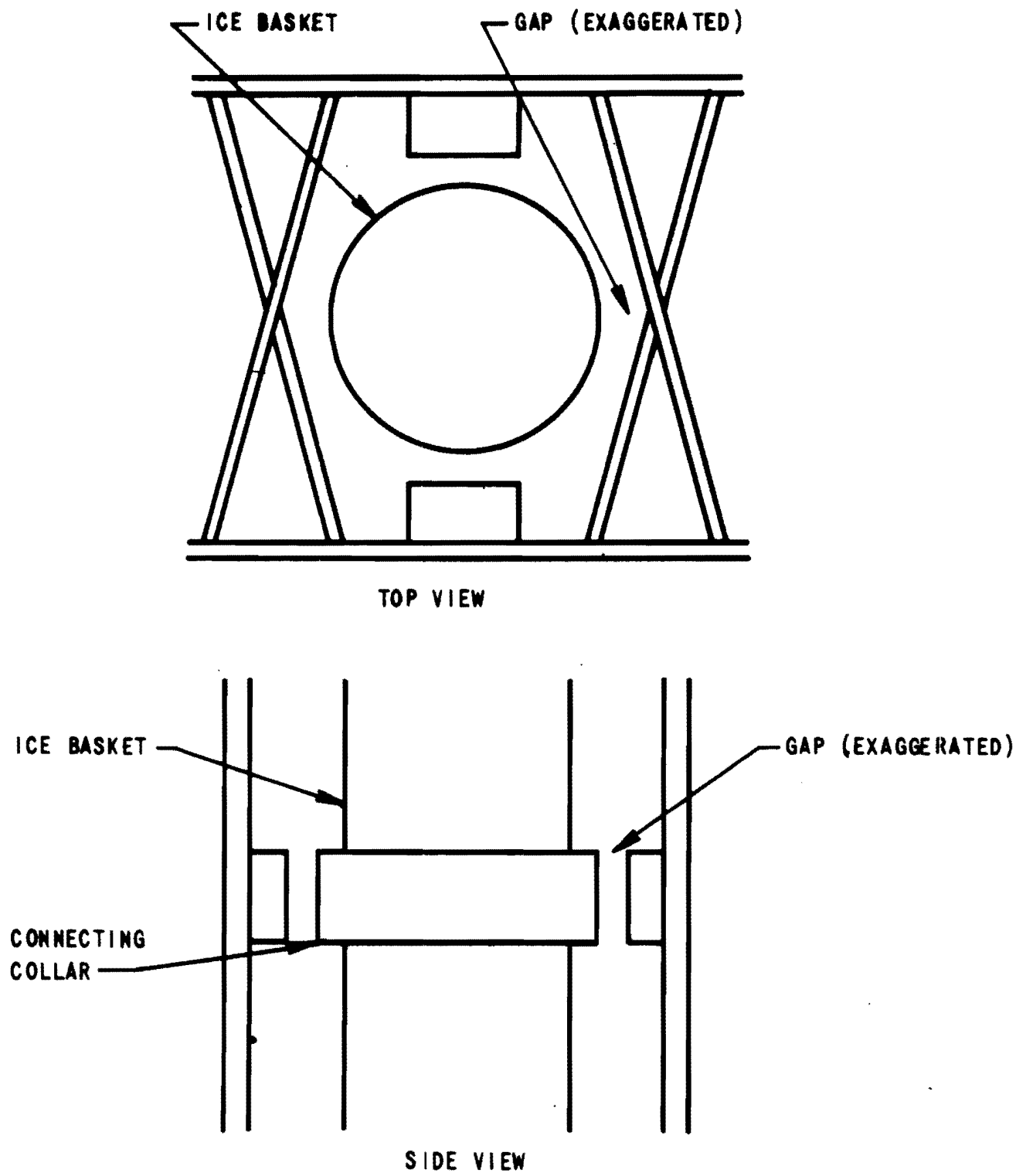

WATTS BAR NUCLEAR PLANT
FINAL SAFETY
ANALYSIS REPORT

LATTICE FRAME ICE BASKET
GAP

Figure 6.7-46

Figure 6.7-46 Lattice Frame Ice Basket Gap

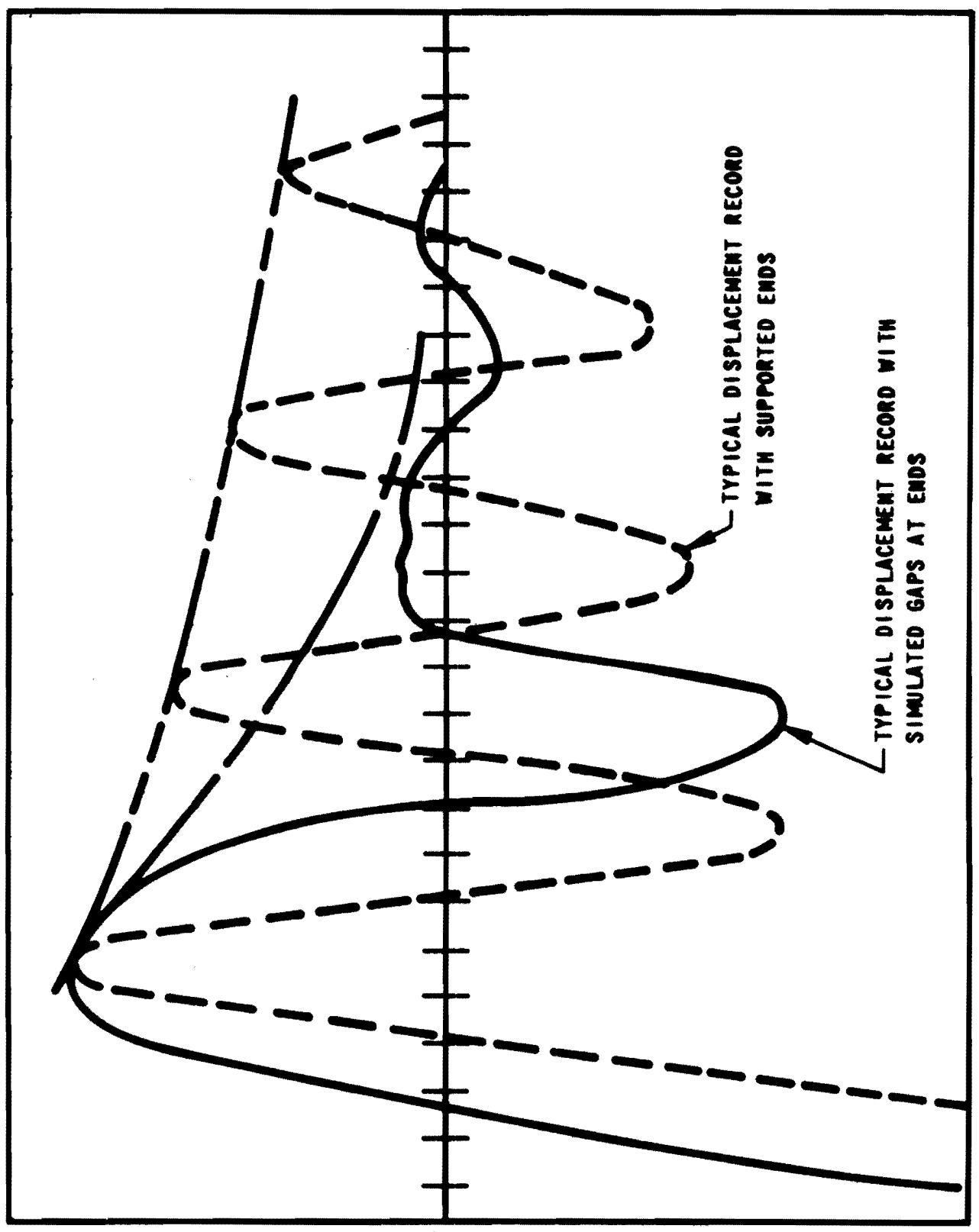

WATTS BAR NUCLEAR PLANT
FINAL SAFETY
ANALYSIS REPORT

TYPICAL DISPLACEMENT TIME
HISTORIES FOR 12 FOOT BASKET
WITH END SUPPORTS - PLUCK TEST

Figure 6.7-47

Figure 6.7-47 Typical Displacement Time Histories for l2-Foot Basket with End Supports - Pluck Test

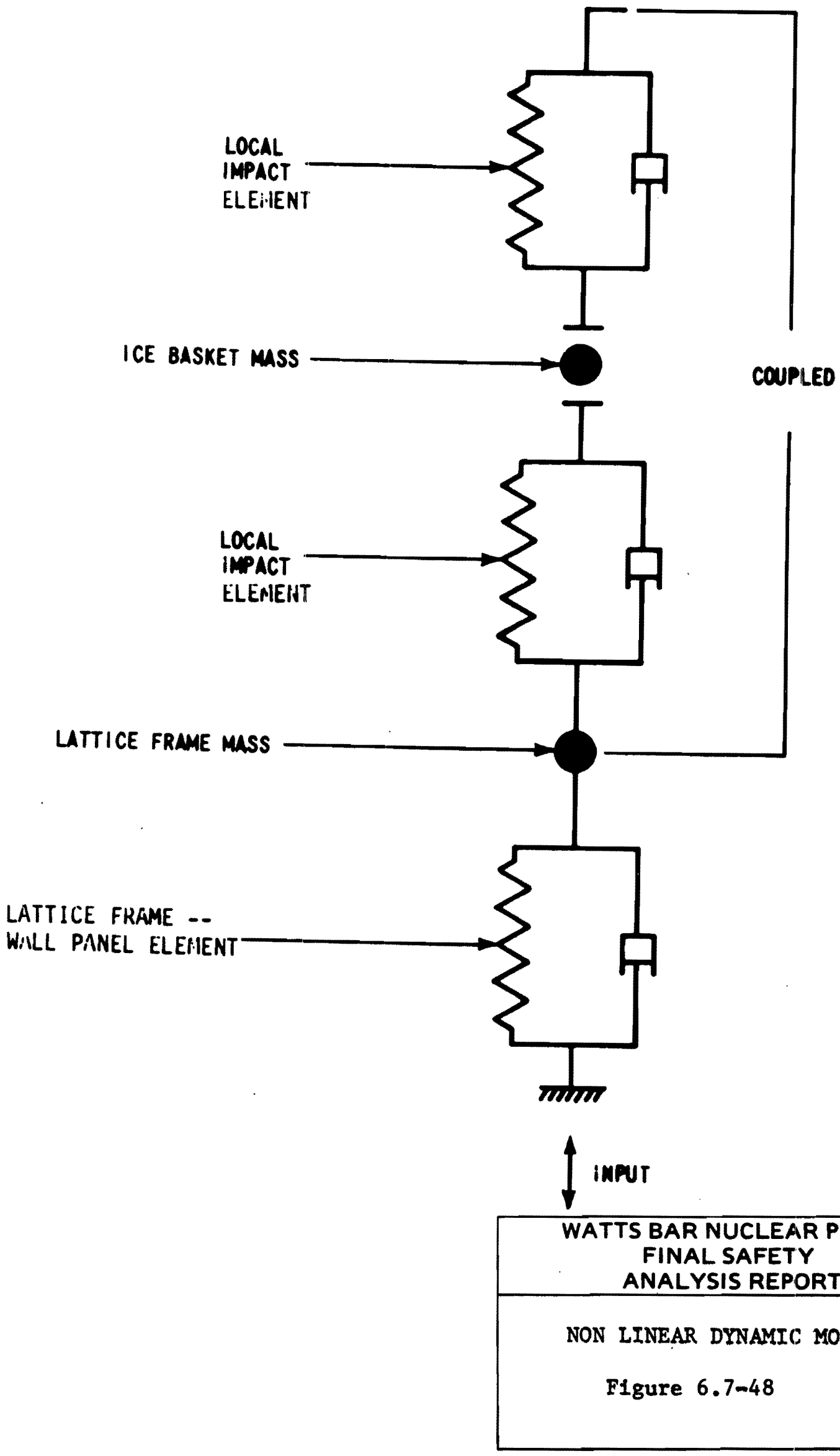

Figure 6.7-48 Non Linear Dynamic Model

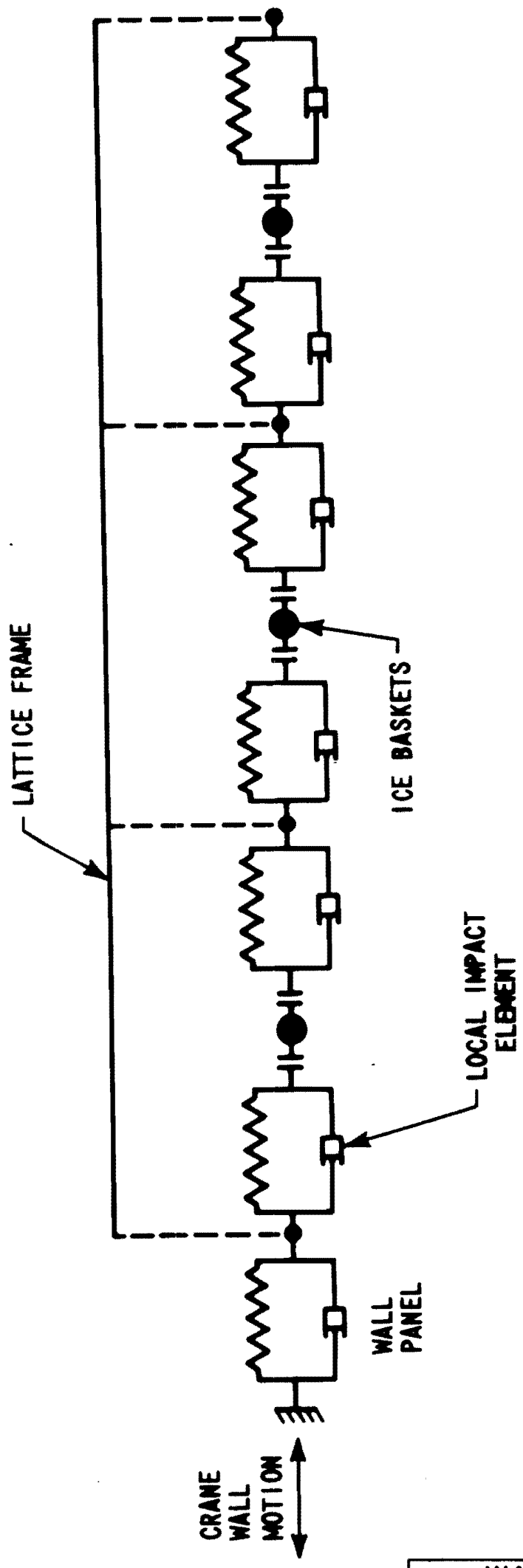

WATTS BAR NUCLEAR PLANT
FINAL SAFETY
ANALYSIS REPORT

3 MASS TANGENTIAL ICE BASKET MODEL

Figure 6.7-49

Figure 6.7-49 3-Mass Tangential Ice Basket Model

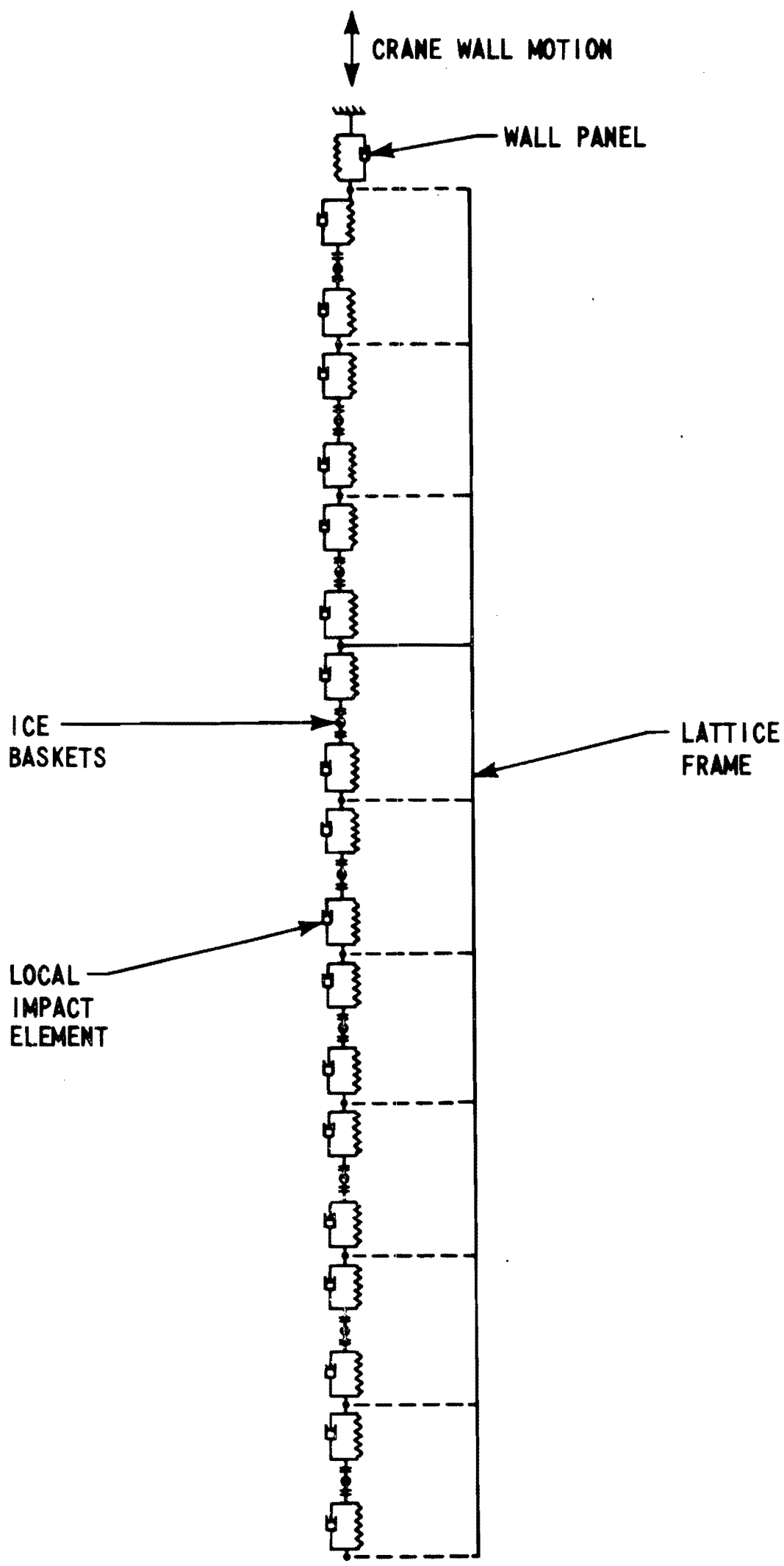

WATTS BAR NUCLEAR PLANT
FINAL SAFETY
ANALYSIS REPORT

9 MASS RADIAL ICE BASKET MODEL

Figure 6.7-50

Figure 6.7-50 9-Mass Radial Ice Basket Model

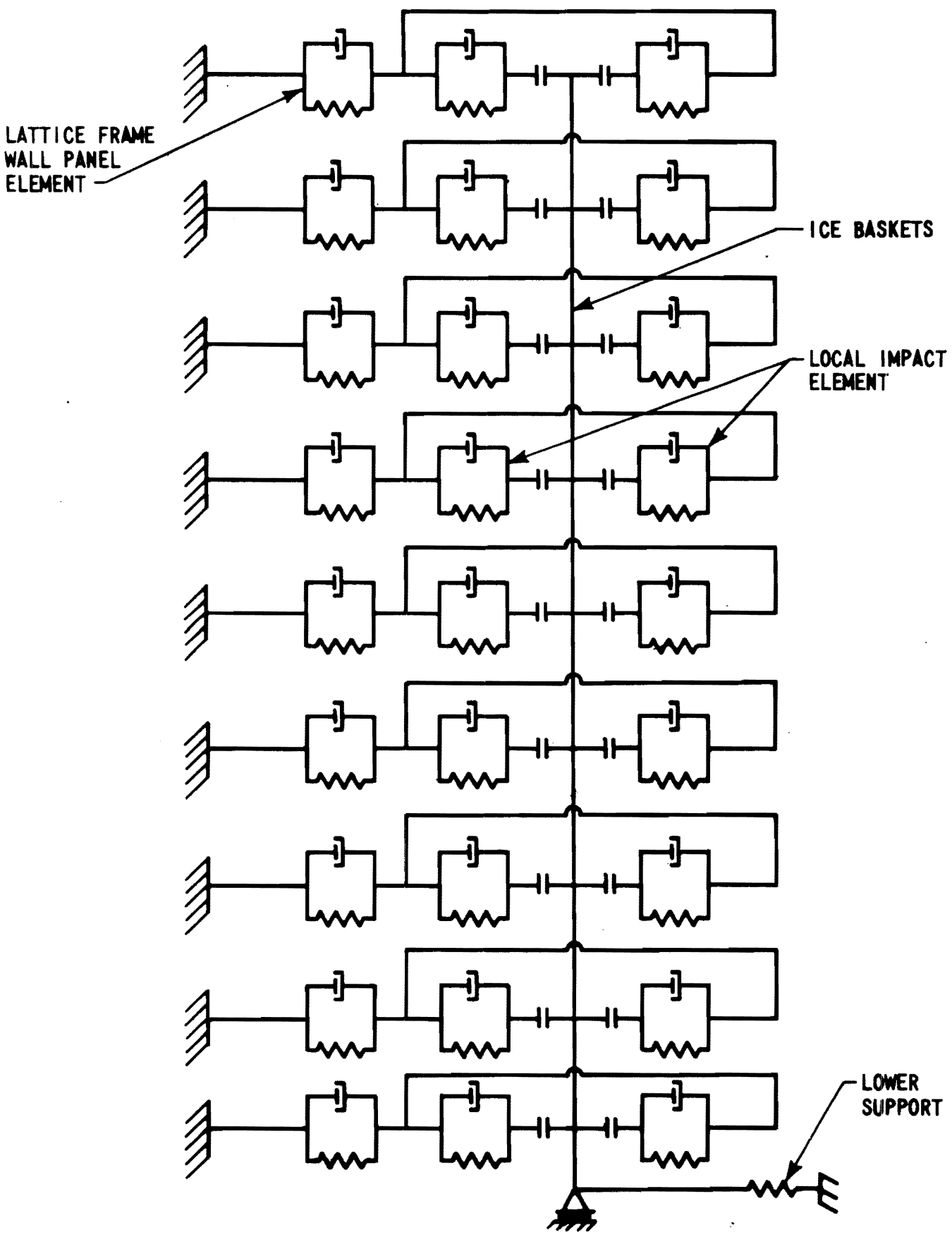

WATTS BAR NUCLEAR PLANT
FINAL SAFETY
ANALYSIS REPORT

48 FOOT BEAM MODEL

Figure 6.7-51

Figure 6.7-51 48-Foot Beam Model

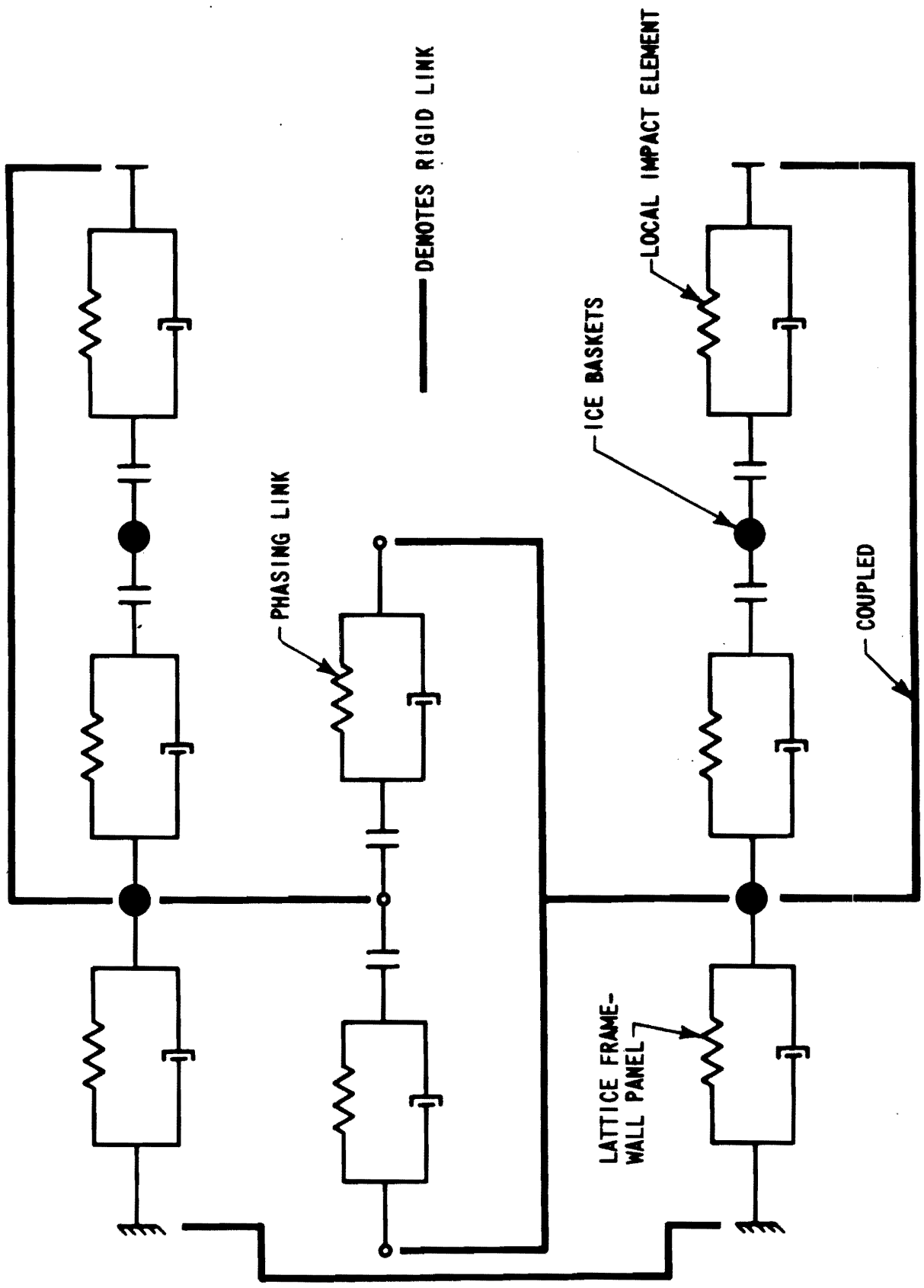

WATTS BAR NUCLEAR PLANT
FINAL SAFETY
ANALYSIS REPORT

PHASING MASS MODEL OF ADJACENT
LATTICE FRAME BAYS

Figure 6.7-52

Figure 6.7-52 Phasing Mass Model of Adjacent Lattice Frame Bays

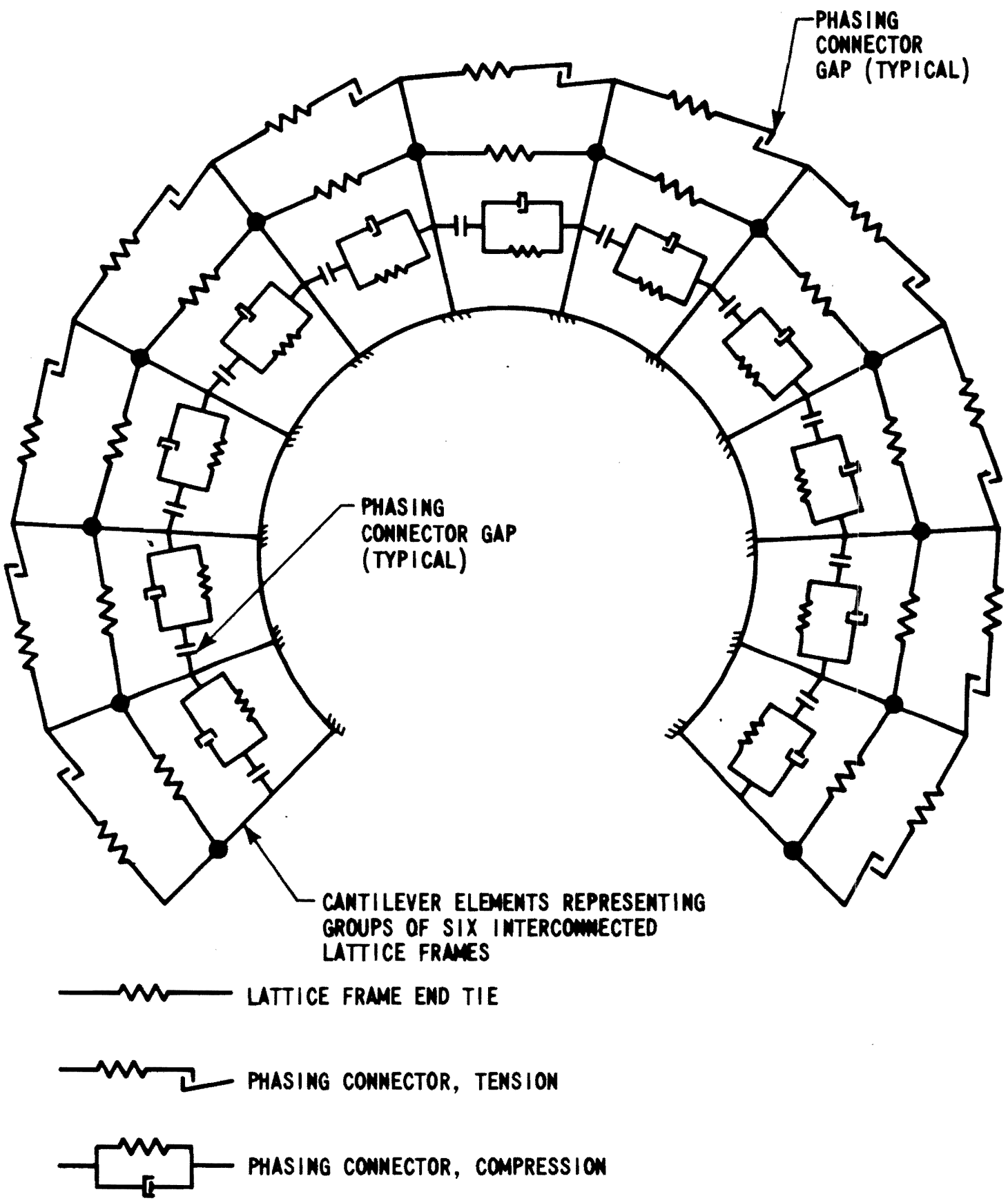

WATTS BAR NUCLEAR PLANT
FINAL SAFETY
ANALYSIS REPORT

PHASING STUDY MODEL, 1 LEVEL
LATTICE FRAME 300 DEGREES NON-
LINEAR MODEL

Figure 6.7-53

Figure 6.7-53 Phasing Study Model, 1 Level Lattice Frame 300 Degrees Non-Linear Model

10.103-68

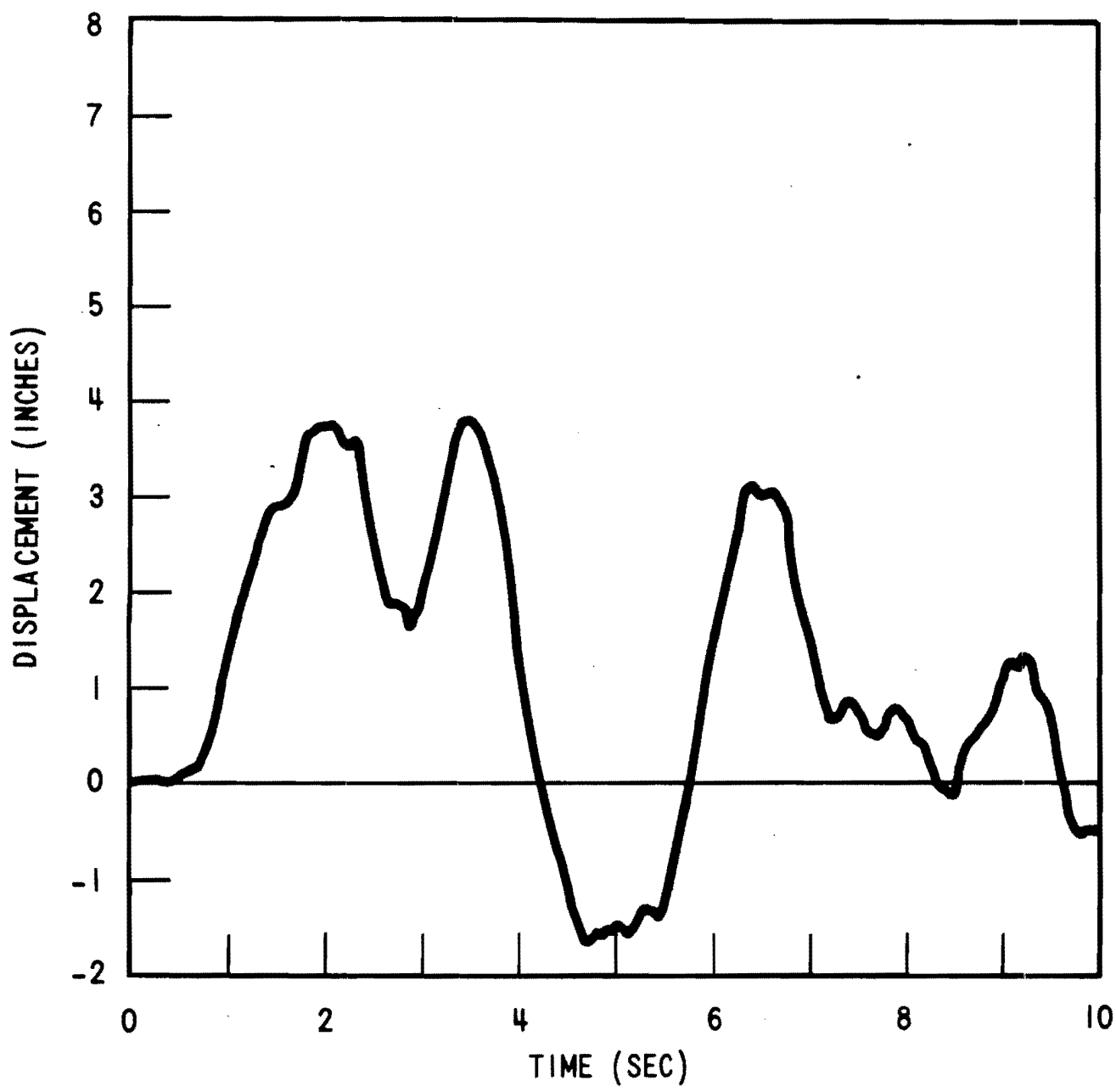

Figure 6.7-54. Typical Crane Wall Displacement.

Figure 6.7-54 Typical Crane Wall Displacement

10.103-69

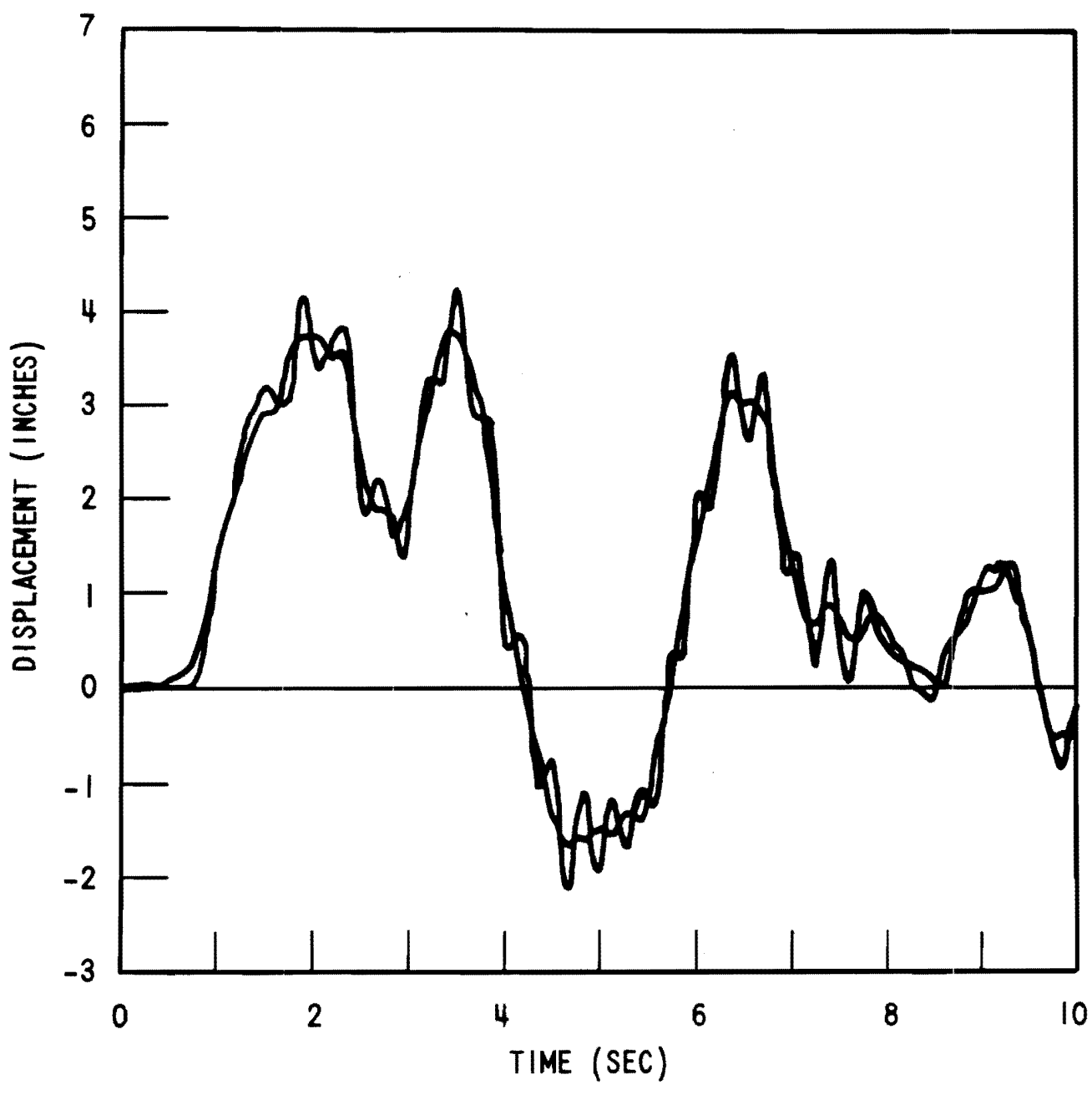

Figure 6.7-55. Typical Ice Basket Displacement Response.

Figure 6.7-55 Typical Ice Basket Displacement Response

10.103-70

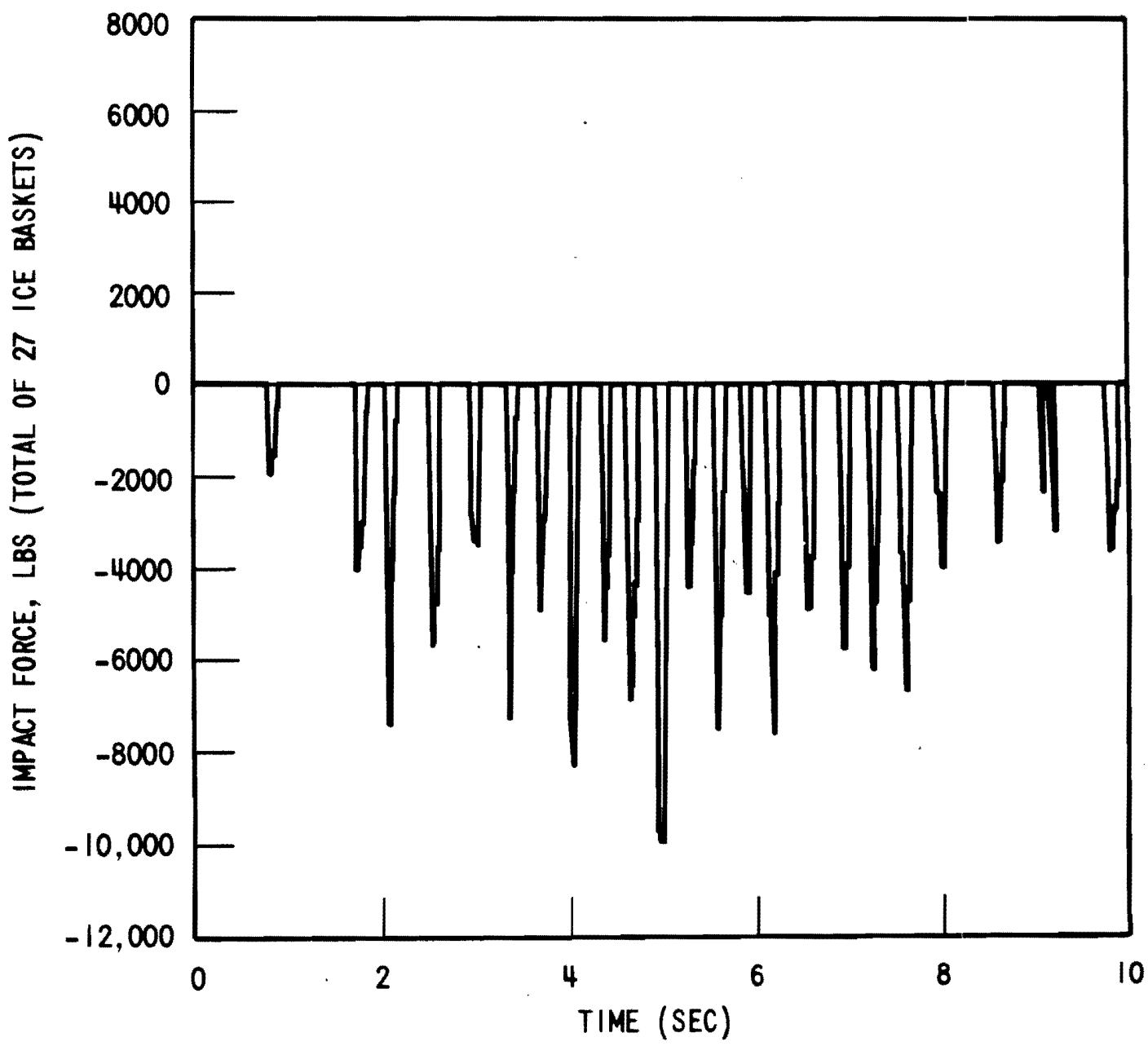

Figure 6.7-56. Typical Ice Basket Impact Force Response.

Figure 6.7-56 Typical Ice Basket Impact Force Response

10.103-71

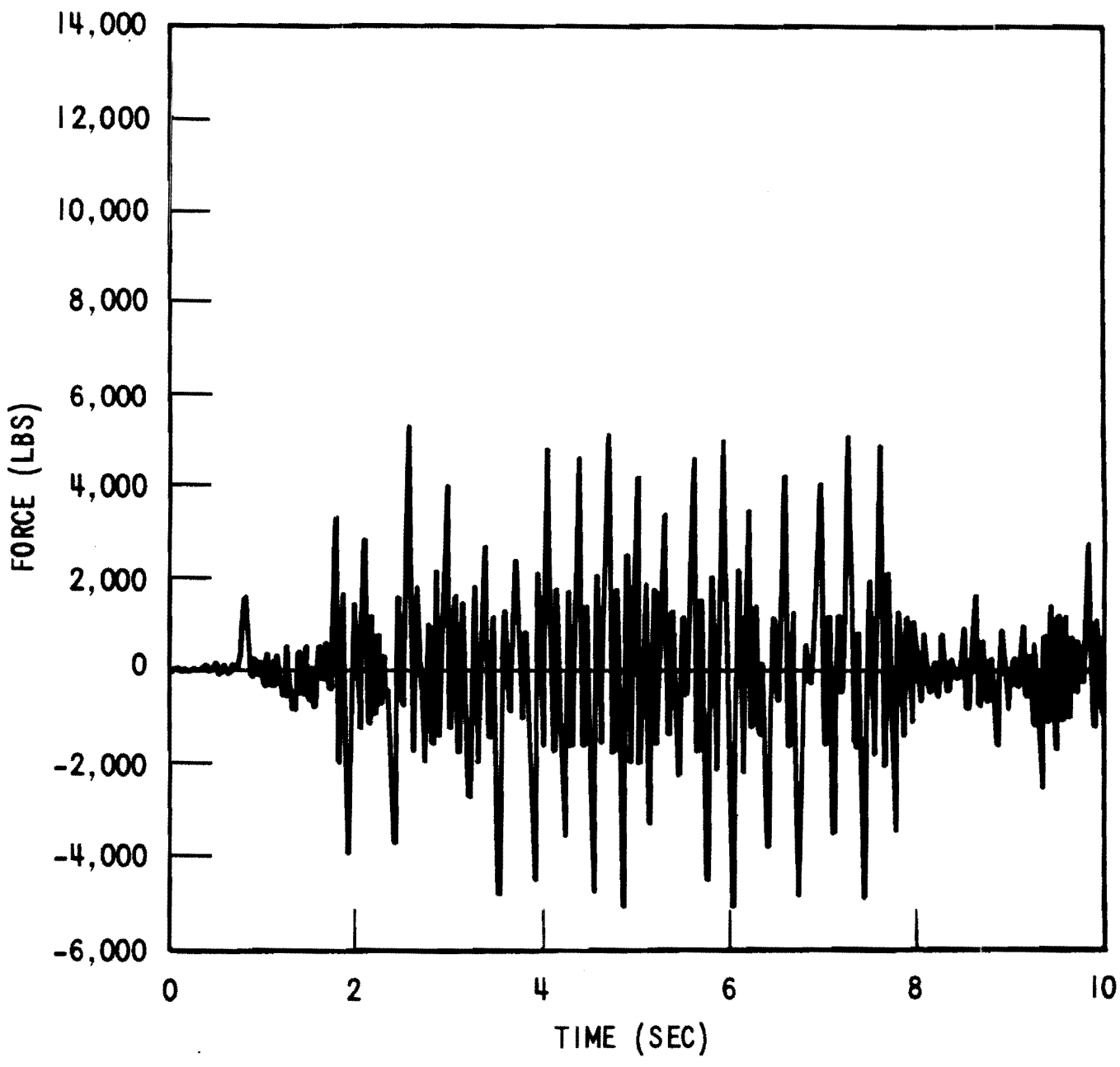

Figure 6.7-57. Typical Crane Wall Panel Load Response.

Figure 6.7-57 Typical Crane Wall Panel Load Response

10.103-72

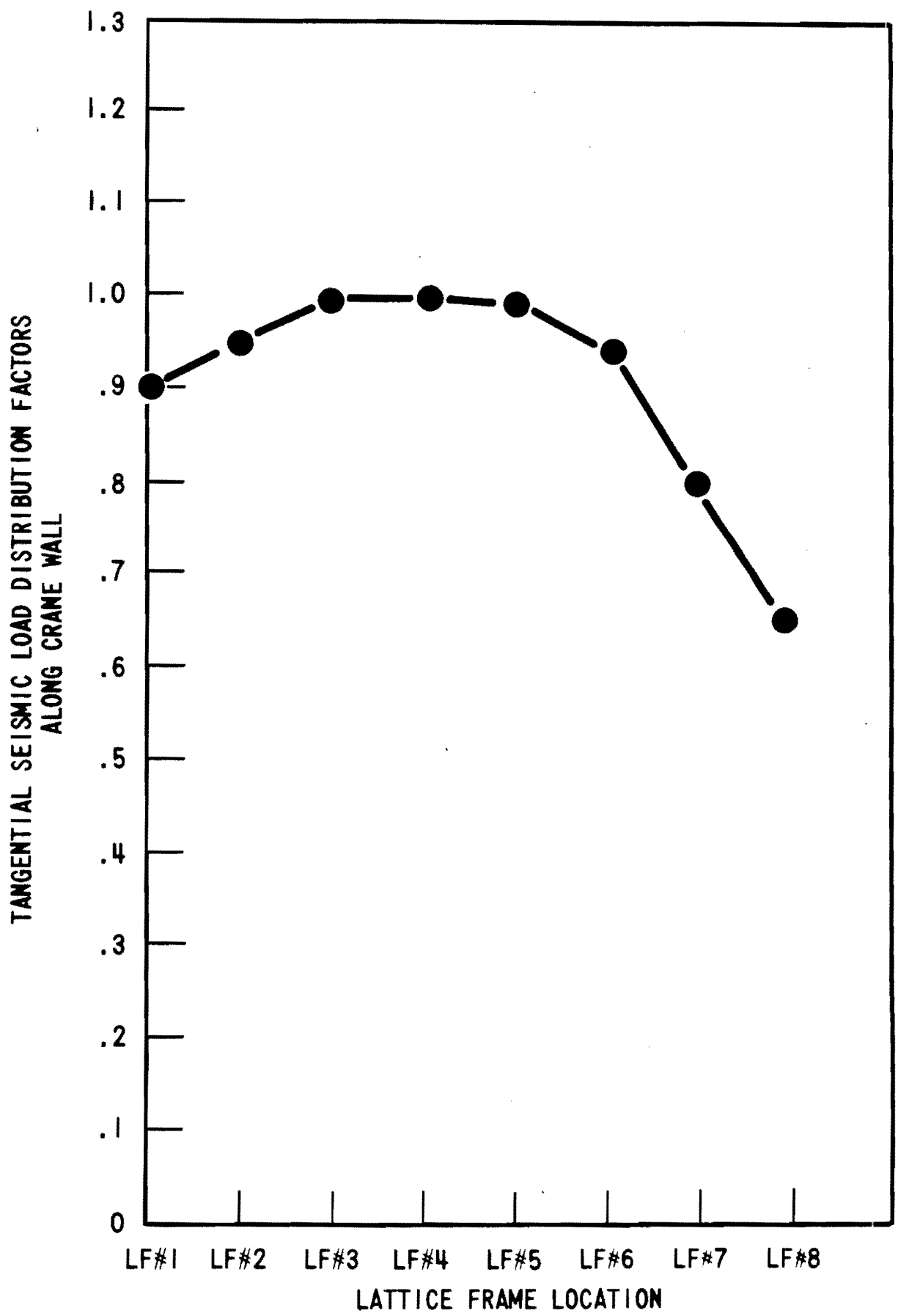

Figure 6.7-58. Wall Panel Design Load Distribution Obtained Using the 48-Foot Beam Model Tangential Case.

Figure 6.7-58 Wall Panel Design Load Distribution Obtained Using the 48-Foot Beam Model Tangential Case

10.103-73

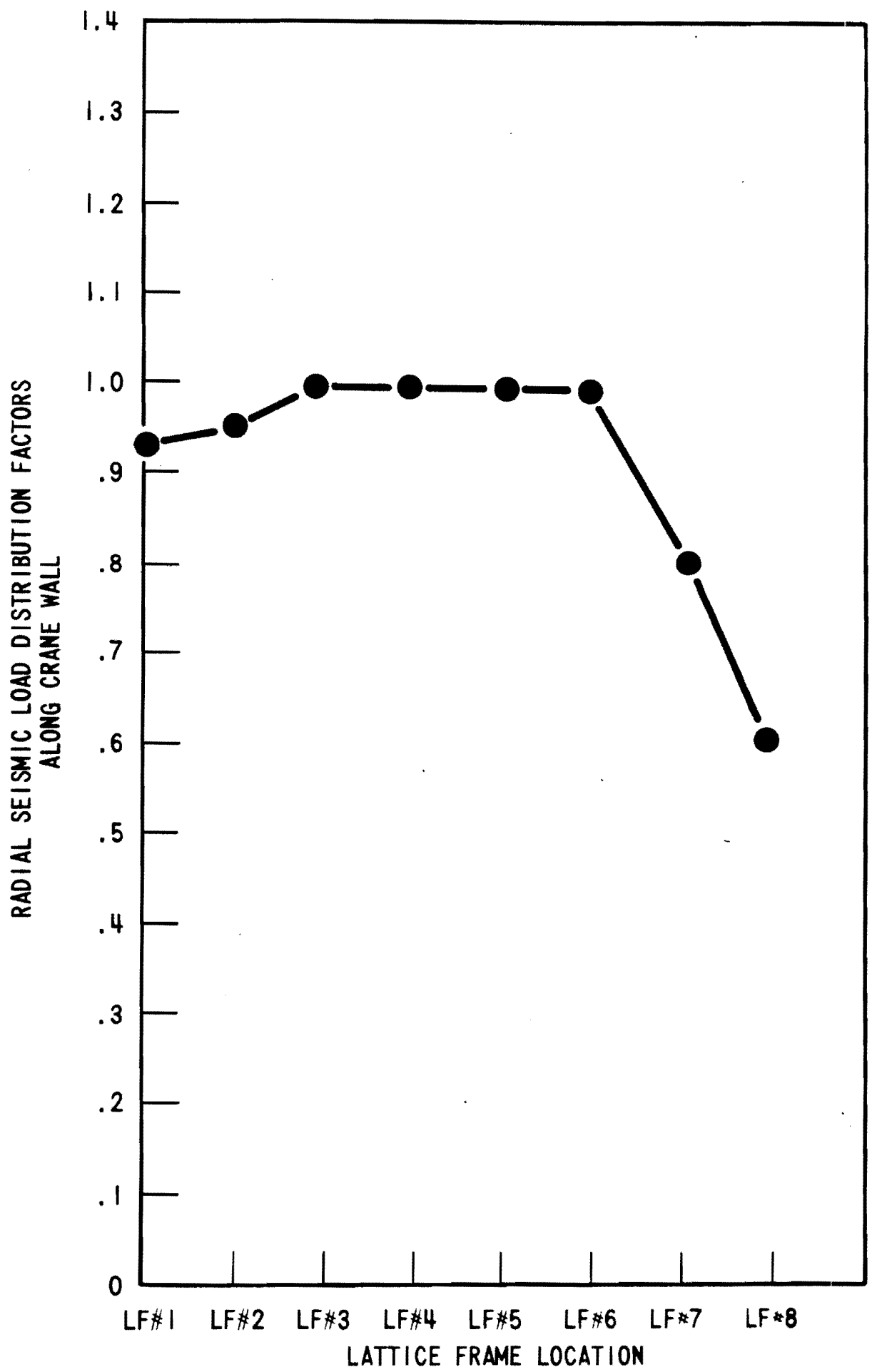

Figure 6.7-59. Wall Panel Design Load Distribution Obtained Using the 48-Foot Beam Model Radial Case.

Figure 6.7-59 Wall Panel Design Load Distribution Obtained Using the 48-Foot Beam Model Radial Case

THIS PAGE INTENTIONALLY BLANK

6.8 AIR RETURN FANS

6.8.1 Design Bases

The primary purpose of the air return fan system is to enhance the ice condenser and containment spray heat removal operation by circulating air from the upper compartment to the lower compartment, through the ice condenser, and then back to the upper compartment. This operation takes place at the appropriate time (Section 6.7) following a design-basis accident, which includes a LOCA. The secondary purpose of the system is to limit hydrogen concentration in potentially stagnant regions by ensuring a flow of air from these regions.

6.8.2 System Description

Two 100% capacity air return fans, one redundant, are provided to remove air from the upper compartment through the divider deck to an accumulator room of the lower compartment. The discharged air flows from each accumulator room through the annular equipment areas into the lower compartment. Any steam produced by residual heat mixes with the air and flows through the lower inlet doors of the ice condenser. The steam portion of the mixture condenses as long as ice remains in the ice condenser and the air continues to flow into the upper compartment through doors at the top of the ice condenser. Air return fan suction side is equipped with a non-return damper which prevents flow from the lower compartment to the upper compartment during the initial stages of a LOCA.

Both fans are designed to start 9 $\pm$ 1 minutes after receipt of a Phase B isolation signal. In addition, either fan may be controlled manually from the main control room. Each fan can develop sufficient head to keep the non-return dampers and ice condenser inlet doors open after blowdown is complete.

The design life of the air return system is 40 years under normal (standby) conditions which are 120°F temperature, 100% relative humidity for brief periods of time, and an integrated radiation dose of 2×10^7 rads. The fan motors contain motor space heaters which operate normally to prevent condensation within the motor even when the ambient relative humidity is at 100%. Materials of the system are essentially steel, coated to prevent corrosion.

The system is designed to operate continuously during accident conditions. The air return fan system is an engineered safety feature and meets the qualification requirements for Seismic Category I. The design of the fans and controls of each 100% capacity system meets the intent of Regulatory Guides 1.29 and 1.53. Each air return fan is direct drive, vaneaxial, with a capacity of not less than 41,690 cfm. Each is driven by a 460-volt, 3-phase electric motor which develops 100 horsepower at 1,770 rpm. The non-return dampers are heavy duty and are designed to prevent airflow from the lower compartment to the upper compartment without first going through the ice condenser under a differential pressure of 15 psig. The dampers are controlled to open when the differential pressure across the operating fan assures airflow from the upper to lower compartment. The gravity-loaded damper fails in the

closed position upon loss of necessary flow head, and has a leakage area at 15 psig differential pressure of not more than 5.6 square inches. The position of the damper is monitored in the main control room.

Simultaneously with the return of air from the upper compartment to the lower compartment, post-LOCA hydrogen mixing capability is provided by the air return fan system in the following regions of the containment: containment dome, each of the four steam generator enclosures, pressurizer enclosure, upper reactor cavity, each of the four accumulator rooms, and the instrument room. These regions are served by separate hydrogen collection headers which terminate on the suction side of each of the two air return fans. A schematic of this system is shown in Figure 9.4-28. The minimum design airflow from each region is sufficient to limit the local concentration of hydrogen to not more than the allowable volume percent range as specified in Section 6.2.5.2. Minimum design flow rates are shown in Figure 9.4-28.

The header systems are airflow-balanced prior to initial plant operation to assure that the actual airflows are at least equal to the minimum design flow when either or both fans are in operation.

6.8.3 Safety Evaluation

The design bases of the fans are to reduce containment pressure after blowdown from a LOCA or a non-LOCA pipe break, prevent excessive hydrogen concentrations in pocketed areas, and circulate air through the ice condenser. The containment air return fans turn on 9 $\pm$ 1 minute after Phase B containment isolation signal. Peak containment pressure, about 11.2 psig, is attained at approximately 3600 seconds. The fans provide a continuous mixing of containment compartment atmosphere for the long-term post-blowdown environment. Mixing of the compartment atmospheres helps to bring fission products in contact with the ice bed and/or the upper compartment spray for removal from the containment atmosphere. The fans also aid in mixing the containment atmosphere to preclude hydrogen pocketing, which is assumed to be produced as a result of the accident.

Each fan located in the lower compartment, when operating alone, transfers 40,000 cfm from the upper compartment into the lower compartment and circulates 1,690 cfm from the enclosed areas in the lower compartment through the hydrogen collector duct headers to prevent excessive localized hydrogen buildup following a DBA. A back-draft damper, normally closed, is located upstream of each deck fan to prevent reverse flow during the initial loss-of-coolant blowdown.

The air return fans have sufficient head to overcome the compartment differentials that occur after the reactor coolant system blowdown. The fan head is sufficient to overcome the density effects of steam generation and resistance to airflow through the ice condenser and other system losses. After complete ice bed melt out, each fan has sufficient head to deliver 41,690 cfm with the containment pressurized to the design pressure rating.

The fans are designed to withstand the post-accident containment environment. Two 100% capacity air return systems are provided. Thus, if one fan fails, the other

provides the necessary air flow from the upper to lower compartment. System redundancy also assures that the minimum design air flows required for hydrogen mixing capability are achieved even during operation of only one air return fan. As seen in Figure 9.4-28, the three main headers which serve the steam generator enclosures, pressurizer enclosure, accumulator rooms, and instrument room interconnect the suction side of each fan (downstream of the non-return damper). This arrangement permits flow from each compartment even if only one fan is in operation. The upper reactor cavity and containment dome areas have separate headers connected to each fan which accomplishes the same objective when only one fan is in operation.

6.8.4 Inspection and Testing

Preoperational performance tests are addressed in Chapter 14. Inservice tests and inspections are included in the Technical Specifications.

6.8.5 Instrumentation Requirements

The essential instrumentation requirements are that at least one of the air return fans start at the appropriate time after LOCA and that the fan keeps running for one year. Instrumentation design details are shown on Figures 9.4-30 and 9.4-33. The logic, controls, and instrumentation of this engineered safety feature system are such that a single failure of any component does not result in the loss of functional capability for the system.

REFERENCES

None

THIS PAGE INTENTIONALLY BLANK