UNITED STATES
NUCLEAR REGULATORY COMMISSION
REGION II
SAM NUNN ATLANTA FEDERAL CENTER
61 FORSYTH STREET, SW, SUITE 23T85
ATLANTA, GEORGIA 30303-8931

December 23, 2009

MEMORANDUM TO: Thomas B. Blount, Deputy Director
Division of Policy and Rulemaking
Office of Nuclear Reactor Regulation

FROM: Joel Munday, Deputy Director ***/RA/***
Division of Reactor Projects

SUBJECT: TASK INTERFACE AGREEMENT (TIA) – OPERABILITY OF THE NUCLEAR SERVICE COOLING WATER SYSTEM – VOGTLE ELECTRIC GENERATING PLANT (TIA 2009-008)

This Task Interface Agreement (TIA) documents the applicable regulatory position determined by the Office of Nuclear Reactor Regulation (NRR) and Region II regarding Vogtle Unit 1 and Unit 2 Nuclear Service Cooling Water (NSCW) system operability per Technical Specification (TS) 3.7.8 with the NSCW tower return valves in manual control. This TIA is associated with Unresolved Item (URI) item 05000424, 05000425/2008009-01.

System Description (see diagram)[1]

The NSCW system provides both the Service Water and the Ultimate Heat Sink functions for each unit. Each unit has two independent NSCW trains which include a basin filled with 3 million gallons of water, three 50% capacity pumps and the necessary piping to cool the reactor plant loads (such as the component cooling water heat exchanger, auxiliary component cooling water heat exchanger, emergency diesel generators, emergency core cooling systems motor coolers, and the containment coolers) and return the water to the NSCW cooling tower basin either through a spray header (return valve) or directly to the basin (bypass valve). Water returned to the spray header is cooled by air drawn through the cooling tower by the cooling tower fans.

When the plant is operating, the licensee maintains both NSCW trains running, although with plant design, the pumps can be maintained in standby if they are not needed to cool any loads. If cooling is needed, normal configuration consists of two NSCW pumps running per train. The return water flow is governed by the position of the return (HV1668A) and bypass (HV1668B) valves, collectively referred to as the tower return valves. The operation of the return and bypass valves is controlled by the 3-position tower return header control switch. The tower return header control switch may be placed in either AUTO, OPEN BYPASS, or OPEN NORMAL. In the AUTO position, the operation of the return and bypass valves is a function

Contact: Scott Shaeffer, R-II/DRP/RPB2
404-562-4521

[1] This discussion focuses on the A train. The B train is similar except the tower return instrument and valve numbers in question are 1669 vice 1668.

December 23, 2009

MEMORANDUM TO: Thomas B. Blount, Deputy Director
Division of Policy and Rulemaking
Office of Nuclear Reactor Regulation

FROM: Joel Munday, Deputy Director ***/RA/***
Division of Reactor Projects

SUBJECT: TASK INTERFACE AGREEMENT (TIA) – OPERABILITY OF THE NUCLEAR SERVICE COOLING WATER SYSTEM – VOGTLE ELECTRIC GENERATING PLANT (TIA 2009-008)

This Task Interface Agreement (TIA) documents the applicable regulatory position determined by the Office of Nuclear Reactor Regulation (NRR) and Region II regarding Vogtle Unit 1 and Unit 2 Nuclear Service Cooling Water (NSCW) system operability per Technical Specification (TS) 3.7.8 with the NSCW tower return valves in manual control. This TIA is associated with an unresolved issue with the licensee

System Description (see diagram)[2]

The NSCW system provides both the Service Water and the Ultimate Heat Sink functions for each unit. Each unit has two independent NSCW trains which include a basin filled with 3 million gallons of water, three 50% capacity pumps and the necessary piping to cool the reactor plant loads (such as the component cooling heat exchanger, auxiliary component cooling water heat exchanger, emergency diesel generators, emergency core cooling systems motor coolers, and the containment coolers) and return the water to the NSCW cooling tower basin either through a spray header (return valve) or directly to the basin (bypass valve). Water returned to the spray header is cooled by air drawn through the cooling tower by the cooling tower fans.

When the plant is operating, the licensee maintains both NSCW trains running, although by plant design they can be maintained in standby if they are not needed to cool any loads. Two NSCW pumps are running per train. The return water flow is governed by the position of the return (HV1668A) and bypass (HV1668B) valves, collectively referred to as the tower return valves. The operation of the return and bypass valves is controlled by the 3-position tower return header control switch. The tower return header control switch may be placed in either AUTO, OPEN BYPASS, or OPEN NORMAL. NORMAL. In the AUTO position, the operation of the return and bypass valves is a function

Contact: Scott Shaeffer, R-II/DRP/RPB2
404-562-4521

DISTRIBUTION:
RidsOgcMailCenter RidsNrrMailCenter RidsRgn1MailCenter
RidsRgn2MailCenter RidsRgn3MailCenter RidsRgn4MailCenter
RidsNrrDpr RidsNrrDprPspb RidsNrrDirsItsb
RidsNrrDssSbpb

X PUBLICLY AVAILABLE ☐ NON-PUBLICLY AVAILABLE ☐ SENSITIVE X NON-SENSITIVE
ADAMS: ☐ Yes ACCESSION NUMBER: ML093560025 X SUNSI REVIEW COMPLETE

OFFICE	RII:DRP	RII:DRP	RII:DRP	RII:DRP	RII:DRP	NRR/DSS/SBPB	NRR/DSS/SBPB
SIGNATURE	Via email	Via email	TXL /RA/	SMS /RA/	JTM /RA/	Via email	Via email
NAME	TChandler	MCain	TLighty	SShaeffer	JMunday	GPurciarello	GCasto
DATE	11/06/2009	11/06/2009	12/15/2009	11/16/2009	12/18/2009	10/14/2009	10/15/2009
E-MAIL COPY?	YES NO	YES NO	YES NO	YES NO	YES NO	YES NO	YES NO
OFFICE	NRR/DIRS/ITSB	NRR/DIRS/ITSB	NRR/DPR/PSPB	NRR/DPR/PSPB	NRR/DPR		
SIGNATURE	Via email	CSchulten for	EEB /RA/	SLR /RA/	TBB /RA/		
NAME	CSchulten	RElliott	EBowman	SRosenberg	TBlount		
DATE	10/2/2009	10/21/09	10/21/09	11/4/09	11/4/09		
E-MAIL COPY?	YES NO	YES NO	**YES** ~~NO~~	YES NO	YES NO	YES NO	YES NO

OFFICIAL RECORD COPY DOCUMENT NAME: G:\DRPII\RPB2\VOGTLE\VOGTLE TIA NSCW (3) USE THIS ONE.DOC

[2] This discussion focuses on the A train. The B train is similar except the tower return instrument and valve numbers in question are 1669 vice 1668.

of the return header temperature. If the return temperature, as measured by temperature element TE1668, is below 65°F, the bypass valve (HV1668B) opens and returns water directly to the basin. This feature is for cold weather operations and minimizes unnecessary cooling. When the return temperature goes above 75°F, or if the return temperature is above 75°F when the system is started, the bypass valve (HV1668B) shuts and the return valve (HV1668A) opens to allow water into the spray header. When the return valve opens, one fan (the one in the cooling tower quadrant adjacent to the NSCW pumps) will start to allow cooling of the return water and prevent water spray from reaching the NSCW pumps. The remaining three fans will start in response to increasing return water temperatures (79°F, 83°F and 87°F).

When the tower return header control switch is placed in the OPEN BYPASS position, the bypass valve (HV1668B) opens and the return valve (HV1668A) closes regardless of NSCW return header temperature. In the OPEN NORMAL position, the return valve (HV1668A) opens and the bypass valve (HV1668B) closes regardless of return temperature.

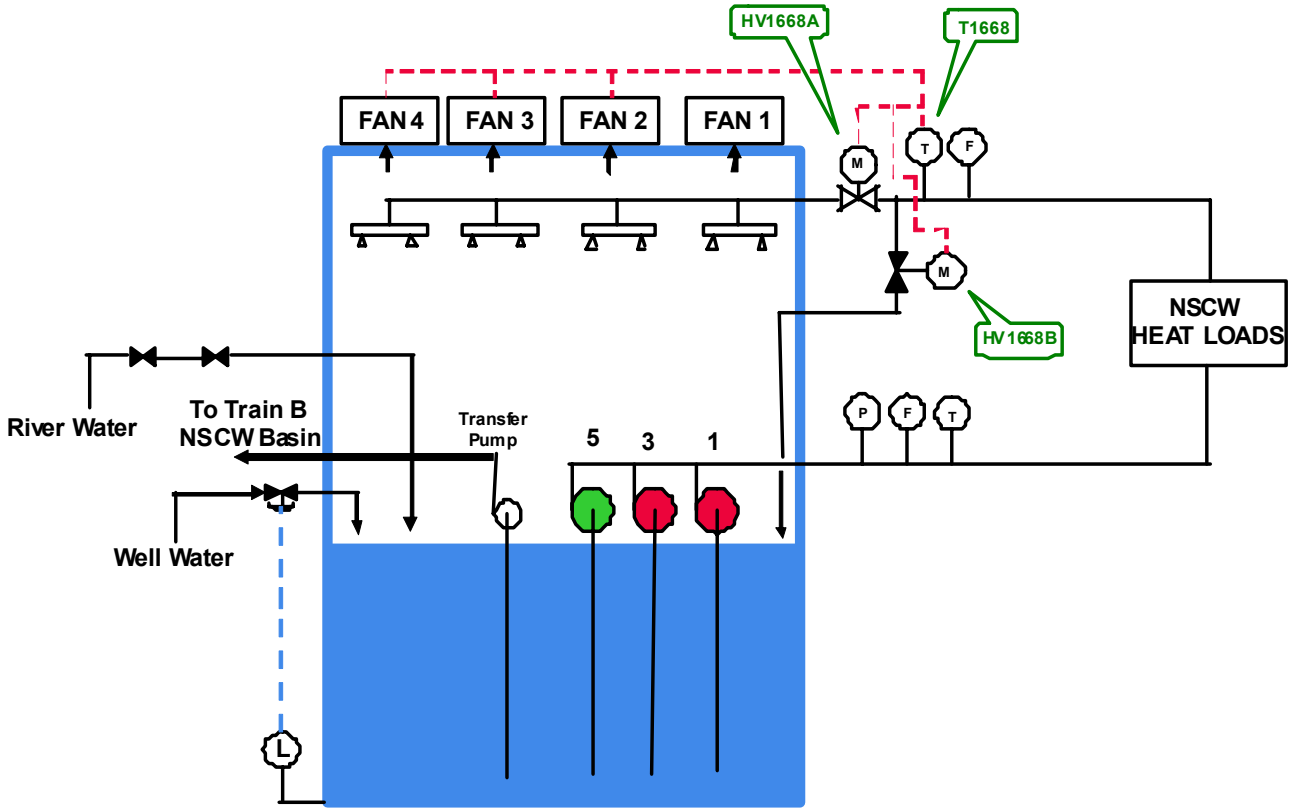

NSCW TRAIN A

The maximum design temperature for the water in the cooling tower basin is 95°F; however, this is allowed to be exceeded in the design analysis during a three-fan cooldown for a short time. NSCW temperature alarms include a control room alarm when NSCW return temperature exceeds 85°F (TE1668) and the return valve (HV1668A) is shut. There are also alarms at the control room back panel when supply temperature exceeds 105°F and when the return temperature exceeds 150°F. Operators may also recognize increased NSCW temperature when they experience equipment cooling problems.

Inspection Finding

On October 12, 2007, the licensee was operating the Unit 1 A train NSCW cooling tower with the control switch for the tower return header valves in OPEN BYPASS while temperature instrument TE1668 was taken out of service for an 18 month surveillance. In accordance with the NSCW system operating procedure (13150) the licensee can operate a cooling tower in the "manual bypass mode" to allow maintenance activities inside the cooling tower. To enter this mode, the tower return header control switch is placed in the OPEN BYPASS position. Procedure 13150 has provisions for monitoring NSCW supply and return temperatures, installing a caution tag, and returning the system to automatic operation if NSCW return temperature reaches 85°F and continues to trend upward while in manual bypass mode.

The shift supervisor had initially declared the effected NSCW train inoperable and entered TS Limiting Condition for Operation (LCO) 3.7.8 Condition A, "One NSCW train inoperable," when the tower return header control switch was placed in the OPEN BYPASS position. However, upon review by operations management and engineering, the licensee declared that the NSCW train was in fact OPERABLE during the surveillance of temperature element because the manual actions incorporated into the NSCW system operating procedure and emergency operating procedure E-0 would prevent loss of cooling capability. As a result of this decision, the licensee exited TS LCO 3.7.8 Condition A with the tower return header control switch in the OPEN BYPASS position.

Licensee Position

The NSCW is OPERABLE when the tower return header control switch is in the OPEN BYPASS position. This position is explained in detail in the licensee letter to the NRC dated February 2, 2009, Agencywide Document Access and Management System (ADAMS) Accession No. ML090360191. The licensee determined that the train was in fact OPERABLE during the surveillance of temperature element because manual actions incorporated into the NSCW system operating procedure and emergency operating procedure E-0 would prevent loss of cooling capability.

In the February 2, 2009, position paper discussed above, the licensee makes the following three contentions:

1. The licensee cites the inclusion of the phrase "also can be opened by remote manual control from either the control room or the shutdown panel" in the FSAR description of the safety function of the NSCW tower return valves in FSAR Table 9.2.1-2, "Failure Modes and Effects Analysis," items 67 through 70.

2. The licensee further contends that the correct position for the tower return valves as they relate to the SR 3.7.8.1 requirement that "each … automatic valve in the flow path servicing

safety related equipment, that is not locked, sealed, or otherwise secured in position" is relative to the return temperature, whether or not the train is operating, or handswitch position.

3. The licensee also contends that the Vogtle Safety Evaluation Report (SER) of June 1985, Sections 2.4.11.2, 7.3.2.9, 9.2.1, and 9.2.5 do not cite credit for "automatic" operation of the NSCW tower return valves, and that in Section 7.3.2.9 of the SER, "Nuclear Service Cooling Water System," manual action is recognized by the Nuclear Regulatory Commission (NRC) as part of the licensing basis of NSCW and the UHS.

Applicable Regulatory Position

The tower return valves are operated in the OPEN BYPASS for routine surveillances and during maintenance for personnel protection approximately once per quarter per train. Placing the tower return header control switch in OPEN BYPASS disables the automatic spray cooling function, which is required to maintain the NSCW system within its design limits following a loss-of-coolant accident. With the automatic design function disabled, the NSCW system no longer meets the TS definition of OPERABLE. Therefore, the NSCW system should be declared INOPERABLE when the tower return header control switch is placed in the OPEN BYPASS position and entry into TS LCO 3.7.8 Condition A is required. This is true whether the temperature element TE1668 is out of service for calibration or not. Having temperature element TE1668 out of service for calibration makes step 5 in the emergency operating procedure E-0 ineffective in restoring flow to the spray header and disables the one control room alarm that could alert operators to a problem with NSCW.

The Vogtle Updated Final Safety Analysis Report (UFSAR) Section 9.2.1.1.1.G "Safety System Design Bases" states that "the NSCW system is designed to perform its cooling function following a loss-of-coolant accident (LOCA), automatically and without operator action, assuming a single failure coincident with a loss of offsite power." When the tower return header control switch is in OPEN BYPASS, the automatic opening feature of the return valve is disabled and the bypass valve will remain open regardless of the NSCW return water temperature, which prevents proper cooling of the NSCW system without operator manual action. With no cooling capability for the water returned to the NSCW cooling tower, the ultimate heat sink cannot be relied upon to supply water at the proper temperature to the NSCW system for much more than 30 minutes under UFSAR worst case conditions. During this initial time period of a design basis LOCA, the operator cannot be relied upon to remember that the temperature element is out of service and initiate manual actions to provide spray cooling. This condition presents a single-failure vulnerability for the other train of NSCW.

In the original licensing of Vogtle Electric Generating Plant, compliance with 10 CFR 50.34, "Contents of Applications: Technical Information," required that each applicant for an operating license identify and describe in their application all differences in design features, etc., from the acceptance criteria of NUREG-0800, "Standard Review Plan [SRP] for the Review of Safety Analysis Reports for Nuclear Power Plants; LWR Edition." Where such differences existed, the applicant was required to discuss how the alternative provides an acceptable method of complying with the rules or regulations of the Commission that underlie the corresponding SRP acceptance criteria. SRP Section 15.6.5, "Loss-of-Coolant Accidents Resulting from Spectrum of Postulated Piping Breaks within the Reactor Coolant Pressure Boundary," Revision 2, ADAMS Accession No. ML052350156, stated that all required operator actions in each

applicant's LOCA analysis be reviewed by the NRC staff. In order for the staff to perform this review, the applicant needed to identify all required operator actions of the full LOCA sequence of events in the application, i.e. the Final Safety Analysis Report (FSAR). The licensee identified operator actions for the LOCA analysis in FSAR Section 15.0.13, "Operator Actions," and Table 15.0.13-1, "Operator Actions Required for Small and Large Break LOCAs." Neither reference lists any manual operator action associated with the NSCW. As required by 10 CFR 50.34, the licensee addressed differences in their application from the SRP in FSAR Section 1.1.6.2, "Standard Review Plan (SRP)" and FSAR Section 1.8, "Differences from Standard Review Plan Acceptance Criteria." Neither reference addresses any exception or alternate means of complying with the guidance of the SRP. Therefore, operator action may not be credited for the operability of the NSCW system.

As discussed above, the capability of the system for remote manual opening referenced by the licensee in their point paper is not credited in the LOCA analysis.

The licensee's contention, that the correct position for the tower return valves as they relate to SR 3.7.8.1 is relative, is incorrect. In accordance with 10 CFR 50.36(b), the "technical specifications will be derived from the analyses and evaluation included in the safety analysis report, and amendments thereto, submitted pursuant to 10 CFR 50.34." The correct position for these valves is ready for automatic operation without operator action as assumed in the LOCA analysis.

The staff disagrees with the licensees final contention that the Vogtle Safety Evaluation Report (SER) of June 1985, Sections 2.4.11.2, 7.3.2.9, 9.2.1, and 9.2.5 do not cite credit for "automatic" operation of the NSCW tower return valves, and that in Section 7.3.2.9 of the SER, "Nuclear Service Cooling Water System," manual action is recognized by the Nuclear Regulatory Commission (NRC) as part of the licensing basis of NSCW and the UHS. This SER is a safety report issued by the NRC in the initial licensing of the plant to document that the licensee has met NRC regulations and is not intended to define all matters of the current licensing basis of the plant, i.e., the set of NRC requirements applicable to Vogtle, as described in UFSAR Section 9.2.1.1.1.G and stating that "the NSCW system is designed to perform its cooling function following a LOCA automatically and without operator action, assuming a single failure coincident with a loss of offsite power". Additionally, in the current licensing basis LOCA analysis in the FSAR Sections 15.0.13 and Table 15.0.13-1, discussed above, the LOCA analysis does not specify manual operation of this system where all manual operation must be described. The SER statement refers to the added capability of the system that is in addition to the automatic start signals associated with a safety injection signal and in no way implies that operator actions involving the cooling tower return valves satisfies the current licensing basis of the system in response to a LOCA.

TS LCO 3.0.2 requires that "[u]pon discovery of a failure to meet an LCO, the Required Actions of the associated Conditions shall be met, except as provided in LCO 3.0.5 and LCO 3.0.6."

TS SR 3.0.1 requires that

> SRs shall be met during the MODES or other specified conditions in the Applicability for individual LCOs, unless otherwise stated in the SR. Failure to meet a Surveillance, whether such failure is experienced during the performance

of the Surveillance or between performances of the Surveillance, shall be failure to meet the LCO.

Conclusion

Modifying the position of the tower return valves from the position required by SR 3.7.8.1 results in a failure to meet that SR. As required by TS SR 3.0.1, this is a failure to meet TS LCO 3.7.8 and the associated NSCW train should be declared inoperable. In accordance with TS LCO 3.0.2, entry into TS LCO 3.7.8 Condition A is required. These TS requirements must be met regardless of the operability status of temperature element TE1668.

cc: S. Rosenberg, PSPB
T. Quay, DPR
E. Bowman, DPR
R. Martin, DORL