William J. Cahill, Jr.
Vice President

Consolidated Edison Company of New York, Inc.
4 Irving Place, New York, N Y 10003
Telephone (212) 460-3819

RECEIVED
FEB 9 1972
U.S. ATOMIC ENERGY COMMISSION
Regulatory
Mail Section

February 7, 1972

Re Indian Point Unit No. 2
AEC Docket No. 50-247

Dr. Peter A. Morris, Director
Division of Reactor Licensing
U. S. Atomic Energy Commission
Washington, D. C. 20545

Regulatory File Cy.

Dear Dr. Morris

This letter is to inform you of a change in the design of Indian Point Unit No. 2, and to request your concurrence that this design change is acceptable. This proposed change was discussed at a meeting with your representatives on January 25, 1972. The enclosure discusses both the design and implementation of this change.

Very truly yours

William J. Cahill, Jr.

William J. Cahill, Jr.
Vice President

enc.
md

DOCKETED
USAEC
FEB 9 1972
REGULATORY
MAIL SECTION
DOCKET CLERK

RECEIVED
FEB 8 1972
U.S.A.E.C.
PUBLIC DOCUMENT ROOM
BY

8111100013 720207
PDR ADOCK 05000247
P PDR

701

LD

50-247

Regulatory File Cy.

Received w/Ltr Dated 2-7-72

Indian Point Unit No. 2
Piping Modifications to the High-Head
Safety Injection System

RECEIVED
FEB 7 1972
U.S.A.E.C.
PUBLIC DOCUMENT ROOM
BY

TABLE OF CONTENTS

		Page
I.	Introduction	1
II.	High-Head Safety Injection System Modifications	2
III.	Loss-of-Coolant Analysis	3
IV.	Steam-Line Break and Steam Generator Tube Rupture Analysis	3
V.	Fabrication and Installation	4
VI.	Control and Supervision of Work Force	4
VII.	Changes to Proposed (Full Power) Technical Specifications and Bases	6

LIST OF FIGURES

Figure 1 - Indian Point Unit No. 2 Safety Injection System Engineering Flow Diagram

Figure 2 - Containment Building Safety Injection System Piping Plan

Figure 3 - Containment Building Safety Injection System Piping Elevation

I. Introduction

The High-Head Safety Injection System, as originally installed in the plant, is described in Section 6.2 of the FSAR. As originally arranged, upon initiation of the safety injection system, flow would have been delivered to two cold legs and two hot legs of the Reactor Coolant System (RCS).

The re-evaluation of the performance of the Emergency Core Cooling System in response to the Interim Acceptance Criteria for Emergency Core Cooling Systems indicated that if coolant flow was valved off to prevent hot leg injection during the injection phase of the loss-of-coolant accident, the need for quantitative evaluation of the effects of steam/water counterflow and steam condensation that might be associated with hot leg injection, could be eliminated. Subsequent review has led us to conclude that modifications should be made to the High-Head Safety Injection System to prevent hot leg injection during the injection phase of the loss-of-coolant accident without dependence on operator initiated valve positioning. These modifications will provide high-head injection capability to all four cold legs. Hot leg injection capability will be retained for use during the long-term recirculation period.
The modification provides the same flow as does the original system and, therefore, assures sufficient flow to cope with small break loss-of-coolant accidents, the

steam line break accident, and steam generator tube rupture.

The performance of the Emergency Core Cooling System for these situations remains acceptable, and more specifically, the results of calculations done to show conformance with the Interim Acceptance Criteria for Emergency Core Cooling Systems are unchanged.

II. High-Head Safety Injection System Modifications

The system plan and elevation arrangements are shown on Figure 2 and Figure 3. A flow diagram of the system is shown on Figure 1. The existing two injection lines from one header into the cold legs of the Reactor Coolant System will remain as is. An additional two cold leg injection points will be added from the other header. The new cold leg injection lines will enter the Reactor Coolant System through the 10" accumulator lines. The motor-operated isolation valves in the four cold leg injection lines will be open during normal operation to avoid the concern for a blocked line. Operation of the system in the injection mode and the operator actions to transfer to the recirculation mode remain the same as before the piping modification.

Hot leg connections, one from each header, will be provided for use during the long-term recirculation period. The motor operated isolation valves on these lines will be blocked closed during normal operation by de-energizing the valve motor operators. These valves will also be supplied with a

permissive interlock to prevent opening of the hot leg valve until at least one of the cold leg valves from the same header is fully closed.

III. Loss-of-Coolant Analysis

Installation of the two additional cold leg connections (replacing the hot leg connections for the initial injection phase) provides the same flow as does the original system.

The effect of this piping change on the loss-of-coolant analysis performed previously has been considered. The analysis of break sizes 0.5 ft^2 to double-ended, performed in accordance with Interim Criteria, considered that the hot leg injection connections provided no flow to the reactor coolant system. This is consistent with the piping modification described herein and hence the results of the analysis and the conclusion reached that the performance of the system is acceptable and in conformance with the criteria are unchanged.

The analysis of small breaks described in the FSAR is based on an injection configuration of three lines injecting and one line spilling. The same configuration is applicable to the modified injection system and hence that analysis is also unaffected by the piping change.

IV. Steam Line Break and Steam Generator Tube Rupture Analysis

For a steam line break or steam generator tube rupture, the analysis described in the FSAR is based on four lines injecting. The same configuration is applied to the modified

safety injection system and hence the analysis is unaffected by the piping change.

V. Fabrication and Installation

Materials, shop and field fabrication, documentation, and quality assurance provisions of this modification will be in accordance with the Codes and Standards specified in the Indian Point Unit No. 2 FSAR and supplements for the Safety Injection System.

The codes applicable to Unit No. 2 construction are applicable directly to this modification. Accordingly, the same practice currently employed for Unit No. 2 construction activities will be followed for materials, fabrication and non-destructive testing. As a minimum, applicable code requirements will be satisfied. In addition to the specific code requirement, the following additional or supplementary practices will be followed:

Positive means will be employed to isolate the existing portion of the RCS involved in this work to ensure against introduction of debris into the RCS during installation, flushing and hydrostatic testing operations.

All hydrostatic testing, flow testing and flushing will be conducted using borated water with a minimum concentration of 2000 ppm boron to ensure against inadvertent introduction of unborated water into the RCS.

VI. Control and Supervision of Work Force

Access to the containment building will only be possible through the airlock located on the 80' elevation. Authorization for

entrance into the containment building will be given by the Station Manager or his designated alternate. During normal working hours, all craft labor including supervision assigned work functions in the containment building will be required to sign in and out at manned guard houses, located immediately outside the entrance way to the 80' elevation personnel airlock. Each access and egress during the working day will be logged by the individual on daily log sheets maintained at the guard house.

Con Edison site personnel and WEDCO/Westinghouse administrative personnel who are authorized by the Station Manager for entry into the containment building are monitored by a guard stationed around-the-clock just inside the personnel airlock. The guard is provided with a list of those persons authorized entry into the containment building and those persons authorized entry to the refueling floor (Elevation 95'). Those persons whose mission requires that they go to the refueling floor will be required to sign in and out on special log sheets maintained by the guard stationed just inside the personnel airlock.

When the existing RCS is being opened, being closed, or is open and unsealed, a QC Inspector will be present. It will be his duty to verify that established procedures are followed and that cleanliness is maintained.

When the RCS is open and work is not underway, the opening will be sealed against dust and debris, and marked with appropriate instructions and precautions. During these

periods, the seal will be monitored periodically around-the-clock to ensure that it remains intact.

If the RCS temperature exceeds 140°F, construction activities in containment associated with this work will be suspended.

VII. Changes to Proposed (Full Power) Technical Specifications and Bases

Replace Paragraph 3.3.A.1.h with:

"Valves 856A, C, D and E, in the discharge header of the safety injection header are in the open position. Valves 856B and F, in the discharge header of the safety injection header are in the closed position. The hot leg valves (856B and F) shall be blocked closed by de-energizing the valve motor operators".

Add this paragraph to "Basis" on Page 3.3-10 immediately following the paragraph discussing Boron Injection Tank valves.

"Valves 856A, C, D and E are maintained in the open position during plant operation to assure a flow path for high-head safety injection during the injection phase of a loss-of-coolant accident. Valves 856B and F are maintained in the closed position during plant operation to prevent hot leg injection during the injection phase of a loss-of-coolant accident. As an additional assurance of preventing hot leg injection, the valve motor operators are de-energized to prevent spurious opening of these valves.

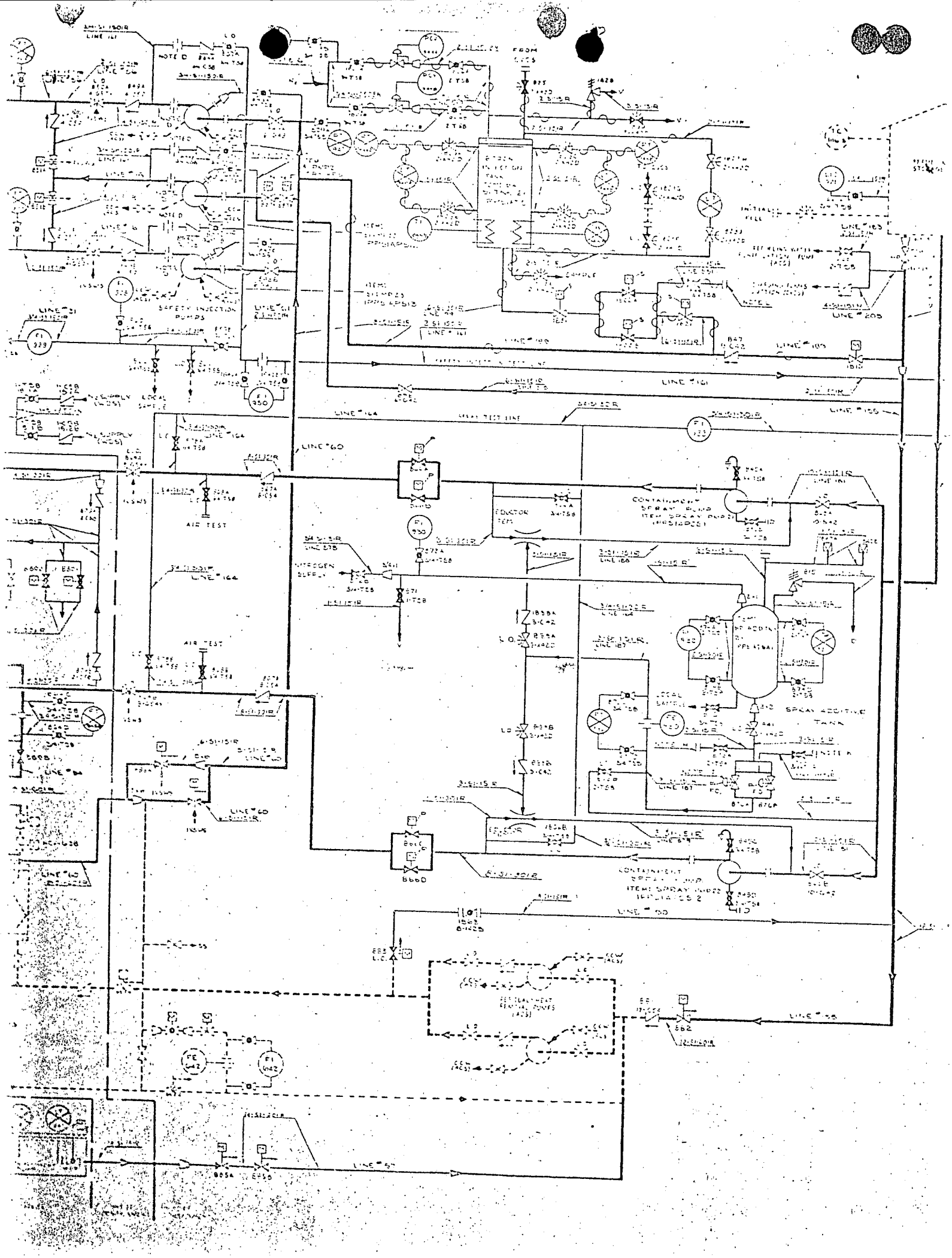

SAFETY INJECTION PUMPS
LINE #31
LINE #61
LINE #161
LINE #164
LINE #60
LINE #205
LINE #155
LINE #50
LINE #57
LOCAL SAMPLE
AIR TEST
NITROGEN SUPPLY
EDUCTOR TEM
CONTAINMENT SPRAY PUMP
SPRAY ADDITIVE TANK
FESTIVAL HEAT REMOVAL PUMPS (ACS)

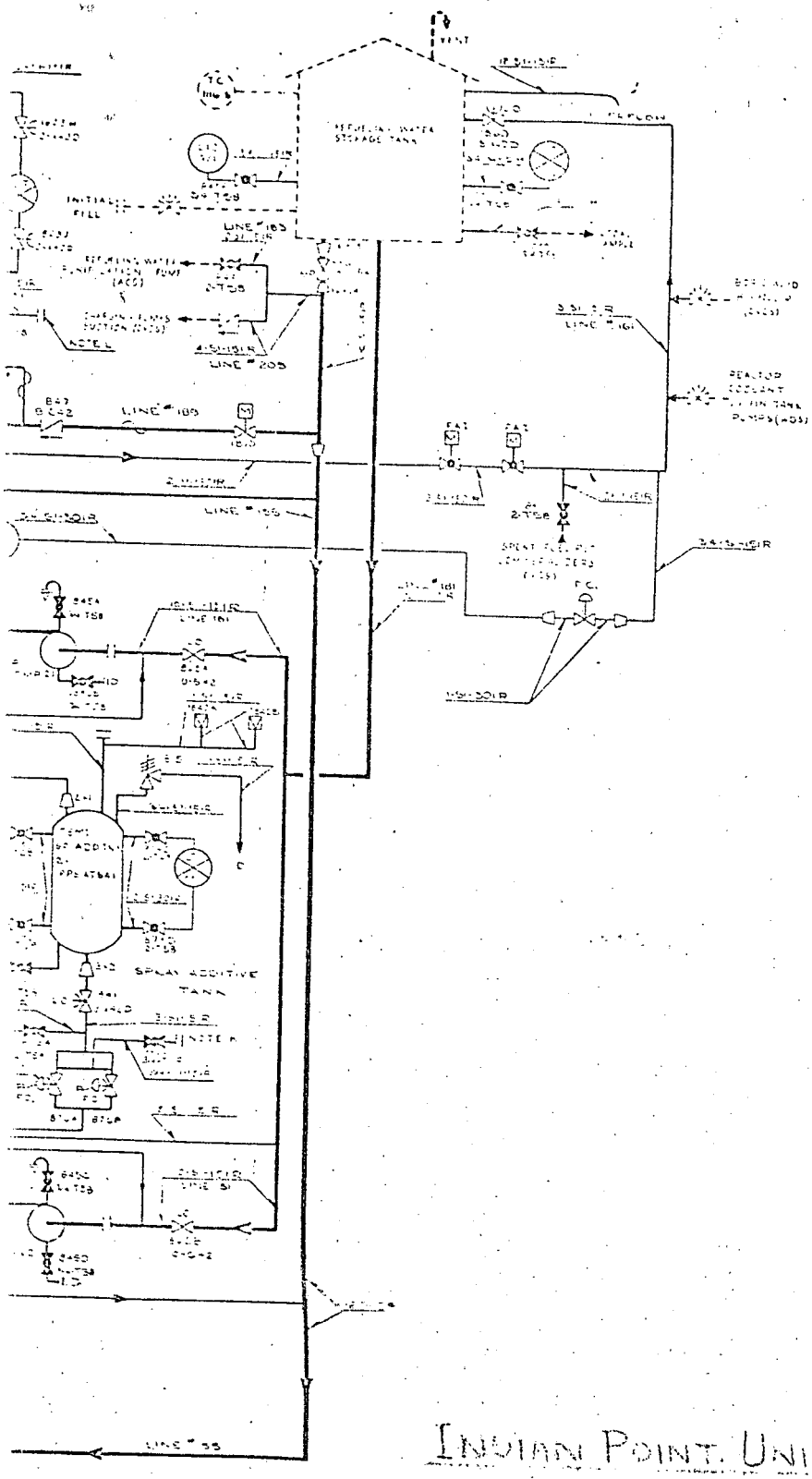

INDIAN POINT UNIT NO. 2

ENGINEERING FLOW DIAGRAM

SAFETY INJECTION SYSTEM

FIGURE 1

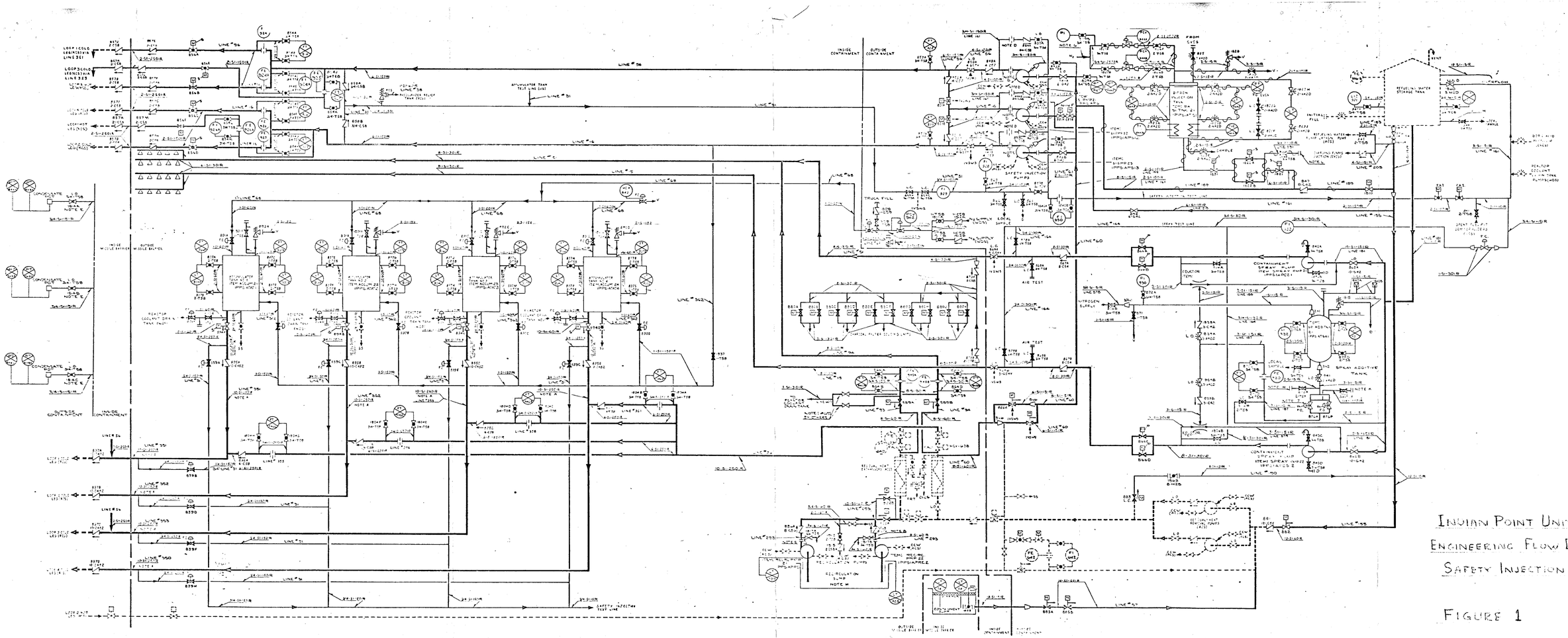

INDIAN POINT UNIT NO. 2
ENGINEERING FLOW DIAGRAM
SAFETY INJECTION SYSTEM

FIGURE 1

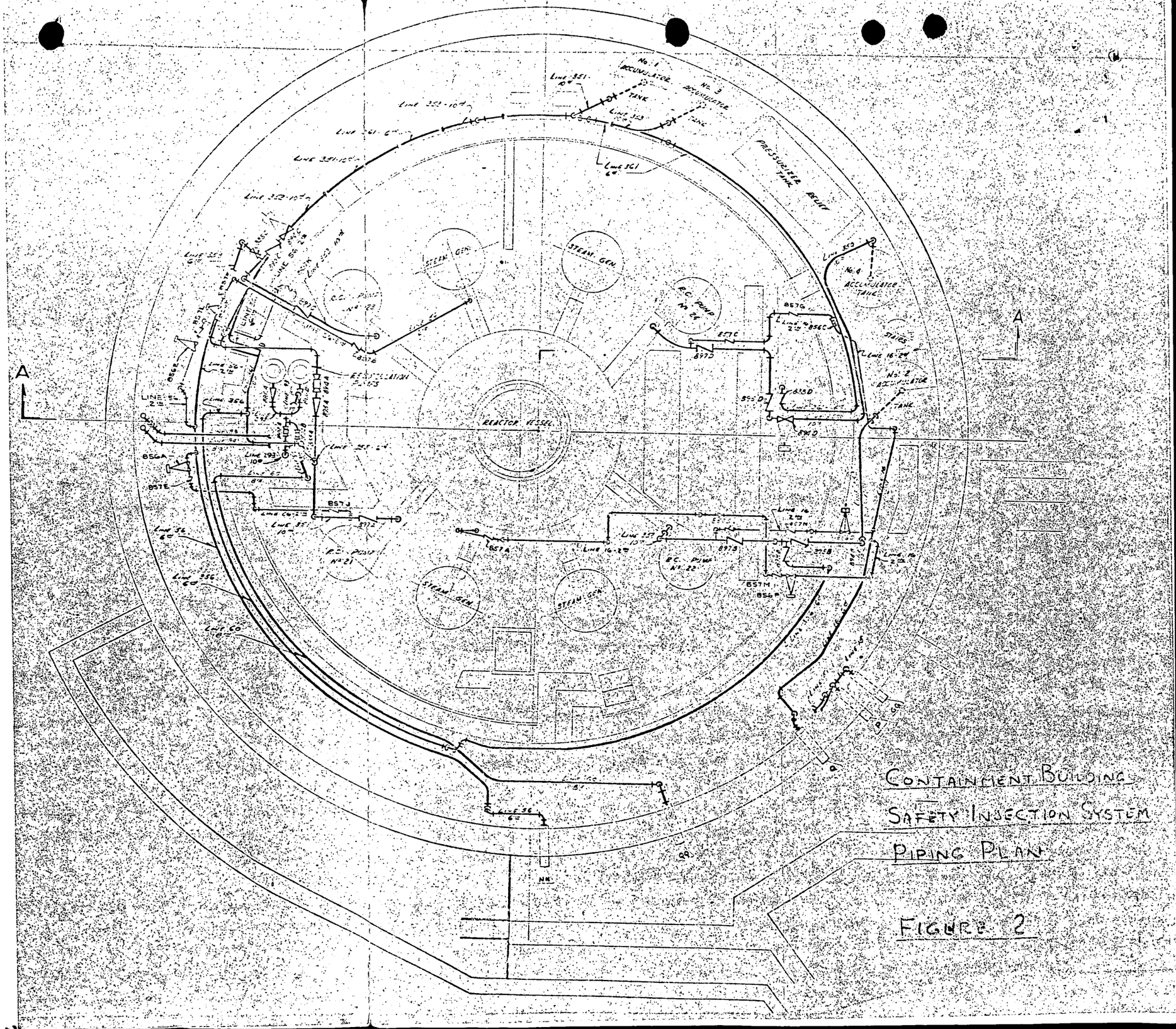

CONTAINMENT BUILDING
SAFETY INJECTION SYSTEM
PIPING PLAN

FIGURE 2

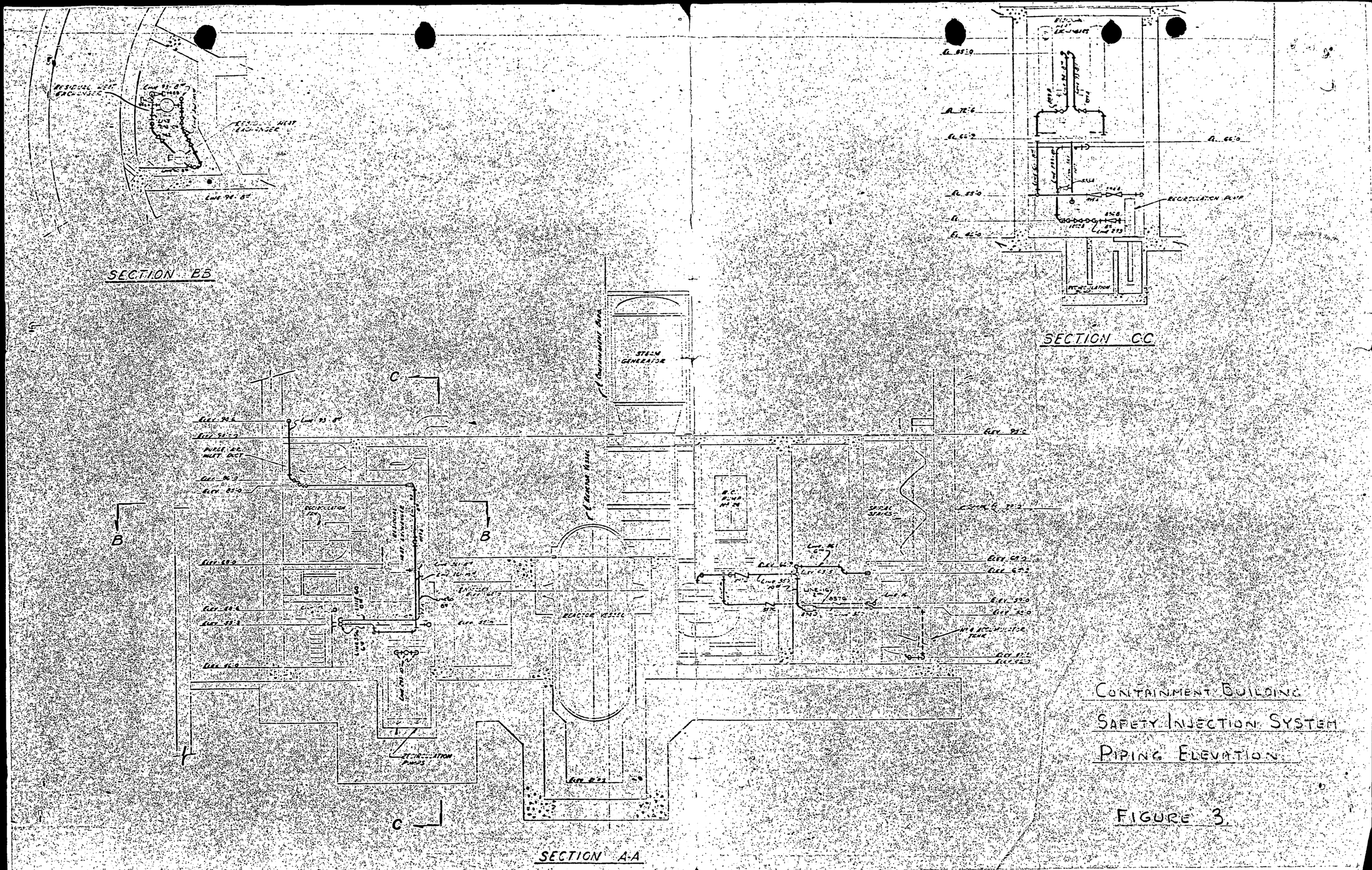

CONTAINMENT BUILDING
SAFETY INJECTION SYSTEM
PIPING ELEVATION

FIGURE 3.

FROM: Consolidated Edison Co of New Yqrk, Inc
New York, New York 10003
William J. Cahill, Jr.

DATE OF DOCUMENT: 2-7-72
DATE RECEIVED: 2-9-72
NO.: 701

LTR. X MEMO: REPORT: OTHER:

TO: Dr. Morris

ORIG.: CC: OTHER:
1 & 69 conf'd

ACTION NECESSARY ☐ CONCURRENCE ☐ DATE ANSWERED:
NO ACTION NECESSARY ☐ COMMENT ☐ BY:

CLASSIF.: U
POST OFFICE
REG. NO:

FILE CODE: 50-247 (INPUT)

DESCRIPTION: (Must Be Unclassified)
Ltr re meeting w/DRL 1-25-72...Requesting change in design of Indian Point # 2... ...trans the following:

ENCLOSURES:
Piping Modifications to the High-Head Safety Injection System w/attached...
Fig 1 - Flow Diagram, Safety Injection System.
Fig 2 - Safety Injection System Piping Plan.

REMARKS:
Fig 3 - Safety Injection System Piping Elevation.
(70 cys rec'd)
1 Cy Local PDR(Montrose, NY)

REFERRED TO	DATE	RECEIVED BY	DATE
Muller W/9 cys for ACTION	2-9-72		
DISTRIBUTION:			
Reg Files AEC PDR			
Compliance (2) OGC, Rm P 506A			
Muntzing & Staff Skovholt			
N. Dube Thompson			
DeYoung DTIE(Laughlin)			
NSIC(Buchanan)			
		701	fod

DO NOT REMOVE
ACKNOWLEDGED

U. S. ATOMIC ENERGY COMMISSION MAIL CONTROL FORM FORM AEC-326 (8-60)

☆ U. S. Government Printing Office: 1968 — 296 — 614